AUTHENTICATED
U.S. GOVERNMENT
INFORMATION
GPO

CODE OF FEDERAL REGULATIONS

Title 40
Protection of Environment

Parts 82 to 86

Revised as of July 1, 2020

Containing a codification of documents
of general applicability and future effect

As of July 1, 2020

Published by the Office of the Federal Register
National Archives and Records Administration
as a Special Edition of the Federal Register

U.S. GOVERNMENT OFFICIAL EDITION NOTICE

Legal Status and Use of Seals and Logos

The seal of the National Archives and Records Administration (NARA) authenticates the Code of Federal Regulations (CFR) as the official codification of Federal regulations established under the Federal Register Act. Under the provisions of 44 U.S.C. 1507, the contents of the CFR, a special edition of the Federal Register, shall be judicially noticed. The CFR is prima facie evidence of the original documents published in the Federal Register (44 U.S.C. 1510).

It is prohibited to use NARA's official seal and the stylized Code of Federal Regulations logo on any republication of this material without the express, written permission of the Archivist of the United States or the Archivist's designee. Any person using NARA's official seals and logos in a manner inconsistent with the provisions of 36 CFR part 1200 is subject to the penalties specified in 18 U.S.C. 506, 701, and 1017.

Use of ISBN Prefix

This is the Official U.S. Government edition of this publication and is herein identified to certify its authenticity. Use of the 0–16 ISBN prefix is for U.S. Government Publishing Office Official Editions only. The Superintendent of Documents of the U.S. Government Publishing Office requests that any reprinted edition clearly be labeled as a copy of the authentic work with a new ISBN.

GPO U.S. GOVERNMENT PUBLISHING OFFICE

U.S. Superintendent of Documents • Washington, DC 20402–0001

http://bookstore.gpo.gov

Phone: toll-free (866) 512-1800; DC area (202) 512-1800

Table of Contents

	Page
Explanation	v
Title 40:	
Chapter I—Environmental Protection Agency (Continued)	3
Finding Aids:	
Table of CFR Titles and Chapters	1207
Alphabetical List of Agencies Appearing in the CFR	1227
List of CFR Sections Affected	1237

Cite this Code: CFR

To cite the regulations in this volume use title, part and section number. Thus, 40 CFR 82.1 *refers to title 40, part 82, section 1.*

Explanation

The Code of Federal Regulations is a codification of the general and permanent rules published in the Federal Register by the Executive departments and agencies of the Federal Government. The Code is divided into 50 titles which represent broad areas subject to Federal regulation. Each title is divided into chapters which usually bear the name of the issuing agency. Each chapter is further subdivided into parts covering specific regulatory areas.

Each volume of the Code is revised at least once each calendar year and issued on a quarterly basis approximately as follows:

Title 1 through Title 16.....as of January 1
Title 17 through Title 27.....as of April 1
Title 28 through Title 41.....as of July 1
Title 42 through Title 50.....as of October 1

The appropriate revision date is printed on the cover of each volume.

LEGAL STATUS

The contents of the Federal Register are required to be judicially noticed (44 U.S.C. 1507). The Code of Federal Regulations is prima facie evidence of the text of the original documents (44 U.S.C. 1510).

HOW TO USE THE CODE OF FEDERAL REGULATIONS

The Code of Federal Regulations is kept up to date by the individual issues of the Federal Register. These two publications must be used together to determine the latest version of any given rule.

To determine whether a Code volume has been amended since its revision date (in this case, July 1, 2020), consult the ''List of CFR Sections Affected (LSA),'' which is issued monthly, and the ''Cumulative List of Parts Affected,'' which appears in the Reader Aids section of the daily Federal Register. These two lists will identify the Federal Register page number of the latest amendment of any given rule.

EFFECTIVE AND EXPIRATION DATES

Each volume of the Code contains amendments published in the Federal Register since the last revision of that volume of the Code. Source citations for the regulations are referred to by volume number and page number of the Federal Register and date of publication. Publication dates and effective dates are usually not the same and care must be exercised by the user in determining the actual effective date. In instances where the effective date is beyond the cutoff date for the Code a note has been inserted to reflect the future effective date. In those instances where a regulation published in the Federal Register states a date certain for expiration, an appropriate note will be inserted following the text.

OMB CONTROL NUMBERS

The Paperwork Reduction Act of 1980 (Pub. L. 96–511) requires Federal agencies to display an OMB control number with their information collection request.

Many agencies have begun publishing numerous OMB control numbers as amendments to existing regulations in the CFR. These OMB numbers are placed as close as possible to the applicable recordkeeping or reporting requirements.

PAST PROVISIONS OF THE CODE

Provisions of the Code that are no longer in force and effect as of the revision date stated on the cover of each volume are not carried. Code users may find the text of provisions in effect on any given date in the past by using the appropriate List of CFR Sections Affected (LSA). For the convenience of the reader, a ''List of CFR Sections Affected'' is published at the end of each CFR volume. For changes to the Code prior to the LSA listings at the end of the volume, consult previous annual editions of the LSA. For changes to the Code prior to 2001, consult the List of CFR Sections Affected compilations, published for 1949-1963, 1964-1972, 1973-1985, and 1986-2000.

''[RESERVED]'' TERMINOLOGY

The term ''[Reserved]'' is used as a place holder within the Code of Federal Regulations. An agency may add regulatory information at a ''[Reserved]'' location at any time. Occasionally ''[Reserved]'' is used editorially to indicate that a portion of the CFR was left vacant and not dropped in error.

INCORPORATION BY REFERENCE

What is incorporation by reference? Incorporation by reference was established by statute and allows Federal agencies to meet the requirement to publish regulations in the Federal Register by referring to materials already published elsewhere. For an incorporation to be valid, the Director of the Federal Register must approve it. The legal effect of incorporation by reference is that the material is treated as if it were published in full in the Federal Register (5 U.S.C. 552(a)). This material, like any other properly issued regulation, has the force of law.

What is a proper incorporation by reference? The Director of the Federal Register will approve an incorporation by reference only when the requirements of 1 CFR part 51 are met. Some of the elements on which approval is based are:

(a) The incorporation will substantially reduce the volume of material published in the Federal Register.

(b) The matter incorporated is in fact available to the extent necessary to afford fairness and uniformity in the administrative process.

(c) The incorporating document is drafted and submitted for publication in accordance with 1 CFR part 51.

What if the material incorporated by reference cannot be found? If you have any problem locating or obtaining a copy of material listed as an approved incorporation by reference, please contact the agency that issued the regulation containing that incorporation. If, after contacting the agency, you find the material is not available, please notify the Director of the Federal Register, National Archives and Records Administration, 8601 Adelphi Road, College Park, MD 20740-6001, or call 202-741-6010.

CFR INDEXES AND TABULAR GUIDES

A subject index to the Code of Federal Regulations is contained in a separate volume, revised annually as of January 1, entitled CFR INDEX AND FINDING AIDS. This volume contains the Parallel Table of Authorities and Rules. A list of CFR titles, chapters, subchapters, and parts and an alphabetical list of agencies publishing in the CFR are also included in this volume.

An index to the text of ''Title 3—The President'' is carried within that volume.

The Federal Register Index is issued monthly in cumulative form. This index is based on a consolidation of the ''Contents'' entries in the daily Federal Register.

A List of CFR Sections Affected (LSA) is published monthly, keyed to the revision dates of the 50 CFR titles.

REPUBLICATION OF MATERIAL

There are no restrictions on the republication of material appearing in the Code of Federal Regulations.

INQUIRIES

For a legal interpretation or explanation of any regulation in this volume, contact the issuing agency. The issuing agency's name appears at the top of odd-numbered pages.

For inquiries concerning CFR reference assistance, call 202–741–6000 or write to the Director, Office of the Federal Register, National Archives and Records Administration, 8601 Adelphi Road, College Park, MD 20740-6001 or e-mail *fedreg.info@nara.gov*.

SALES

The Government Publishing Office (GPO) processes all sales and distribution of the CFR. For payment by credit card, call toll-free, 866-512-1800, or DC area, 202-512-1800, M-F 8 a.m. to 4 p.m. e.s.t. or fax your order to 202-512-2104, 24 hours a day. For payment by check, write to: US Government Publishing Office – New Orders, P.O. Box 979050, St. Louis, MO 63197-9000.

ELECTRONIC SERVICES

The full text of the Code of Federal Regulations, the LSA (List of CFR Sections Affected), The United States Government Manual, the Federal Register, Public Laws, Public Papers of the Presidents of the United States, Compilation of Presidential Documents and the Privacy Act Compilation are available in electronic format via *www.govinfo.gov*. For more information, contact the GPO Customer Contact Center, U.S. Government Publishing Office. Phone 202-512-1800, or 866-512-1800 (toll-free). E-mail, *ContactCenter@gpo.gov*.

The Office of the Federal Register also offers a free service on the National Archives and Records Administration's (NARA) website for public law numbers, Federal Register finding aids, and related information. Connect to NARA's website at *www.archives.gov/federal-register*.

The e-CFR is a regularly updated, unofficial editorial compilation of CFR material and Federal Register amendments, produced by the Office of the Federal Register and the Government Publishing Office. It is available at *www.ecfr.gov*.

OLIVER A. POTTS,
Director,
Office of the Federal Register
July 1, 2020

THIS TITLE

Title 40—PROTECTION OF ENVIRONMENT is composed of thirty-seven volumes. The parts in these volumes are arranged in the following order: Parts 1–49, parts 50–51, part 52 (52.01–52.1018), part 52 (52.1019–52.2019), part 52 (52.2020–end of part 52), parts 53–59, part 60 (60.1–60.499), part 60 (60.500–end of part 60, sections), part 60 (Appendices), parts 61–62, part 63 (63.1–63.599), part 63 (63.600–63.1199), part 63 (63.1200–63.1439), part 63 (63.1440–63.6175), part 63 (63.6580–63.8830), part 63 (63.8980–end of part 63), parts 64–71, parts 72–79, part 80, part 81, parts 82–86, parts 87–95, parts 96–99, parts 100–135, parts 136–149, parts 150–189, parts 190–259, parts 260–265, parts 266–299, parts 300–399, parts 400–424, parts 425–699, parts 700–722, parts 723–789, parts 790–999, parts 1000–1059, and part 1060 to end. The contents of these volumes represent all current regulations codified under this title of the CFR as of July 1, 2020.

Chapter I—Environmental Protection Agency appears in all thirty-seven volumes. OMB control numbers for title 40 appear in § 9.1 of this chapter.

Chapters IV–VIII—Regulations issued by the Environmental Protection Agency and Department of Justice, Council on Environmental Quality, Chemical Safety and Hazard Investigation Board, Environmental Protection Agency and Department of Defense; Uniform National Discharge Standards for Vessels of the Armed Forces, and the Gulf Coast Ecosystem Restoration Council appear in volume thirty seven.

For this volume, Robert J. Sheehan, III was Chief Editor. The Code of Federal Regulations publication program is under the direction of John Hyrum Martinez, assisted by Stephen J. Frattini.

Title 40—Protection of Environment

(This book contains parts 82 to 86)

Part

CHAPTER I—Environmental Protection Agency (Continued) 82

CHAPTER I—ENVIRONMENTAL PROTECTION AGENCY (CONTINUED)

EDITORIAL NOTE: Nomenclature changes to chapter I appear at 65 FR 47324, 47325, Aug. 2, 2000; 66 FR 34375, 34376, June 28, 2001.

SUBCHAPTER C—AIR PROGRAMS (CONTINUED)

Part		*Page*
82	Protection of stratospheric ozone	5
83–84	[Reserved]	
85	Control of air pollution from mobile sources	309
86	Control of emissions from new and in-use highway vehicles and engines	428

SUBCHAPTER C—AIR PROGRAMS (CONTINUED)

PART 82—PROTECTION OF STRATOSPHERIC OZONE

Subpart A—Production and Consumption Controls

Sec.
82.1 Purpose and scope.
82.2 [Reserved]
82.3 Definitions for class I and class II controlled substances.
82.4 Prohibitions for class I controlled substances.
82.5 Apportionment of baseline production allowances for class I controlled substances.
82.6 Apportionment of baseline consumption allowances for class I controlled substances.
82.7 Grant and phase reduction of baseline production and consumption allowances for class I controlled substances.
82.8 Grant of essential use allowances and critical use allowances.
82.9 Availability of production allowances in addition to baseline production allowances for class I controlled substances.
82.10 [Reserved]
82.11 Exports of class I controlled substances to Article 5 Parties.
82.12 Transfers of allowances for class I controlled substances.
82.13 Recordkeeping and reporting requirements for class I controlled substances.
82.14 Process for electronic reporting.
82.15 Prohibitions for class II controlled substances.
82.16 Phaseout schedule of class II controlled substances.
82.17 Apportionment of baseline production allowances for class II controlled substances.
82.18 Availability of production in addition to baseline production allowances for class II controlled substances.
82.19 Apportionment of baseline consumption allowances for class II controlled substances.
82.20 Availability of consumption allowances in addition to baseline consumption allowances for class II controlled substances.
82.21–82.22 [Reserved]
82.23 Transfers of allowances of class II controlled substances.
82.24 Recordkeeping and reporting requirements for class II controlled substances.
APPENDIX A TO SUBPART A OF PART 82—CLASS I CONTROLLED SUBSTANCES
APPENDIX B TO SUBPART A OF PART 82—CLASS II CONTROLLED SUBSTANCES
APPENDIX C TO SUBPART A OF PART 82 [RESERVED]
APPENDIX D TO SUBPART A OF PART 82—HARMONIZED TARIFF SCHEDULE DESCRIPTION OF PRODUCTS THAT MAY CONTAIN CONTROLLED SUBSTANCES IN APPENDIX A, CLASS I, GROUPS I AND II
APPENDIX E TO SUBPART A OF PART 82—ARTICLE 5 PARTIES
APPENDIX F TO SUBPART A OF PART 82—LISTING OF OZONE-DEPLETING CHEMICALS
APPENDIX G TO SUBPART A OF PART 82—UNEP RECOMMENDATIONS FOR CONDITIONS APPLIED TO EXEMPTION FOR ESSENTIAL LABORATORY AND ANALYTICAL USES
APPENDIX H TO SUBPART A OF PART 82—CLEAN AIR ACT AMENDMENTS OF 1990 PHASEOUT SCHEDULE FOR PRODUCTION OF OZONE-DEPLETING SUBSTANCES
APPENDIX I TO SUBPART A OF PART 82—GLOBAL WARMING POTENTIALS (MASS BASIS), REFERENCED TO THE ABSOLUTE GWP FOR THE ADOPTED CARBON CYCLE MODEL CO_2 DECAY RESPONSE AND FUTURE CO_2 ATMOSPHERIC CONCENTRATIONS HELD CONSTANT AT CURRENT LEVELS. (ONLY DIRECT EFFECTS ARE CONSIDERED.)
APPENDIX J TO SUBPART A OF PART 82—PARTIES TO THE MONTREAL PROTOCOL CLASSIFIED UNDER ARTICLE 5(1) THAT HAVE BANNED THE IMPORT OF CONTROLLED PRODUCTS THAT RELY ON CLASS I CONTROLLED SUBSTANCES FOR THEIR CONTINUING FUNCTIONING [RESERVED]
APPENDIX K TO SUBPART A OF PART 82—COMMODITY CODES FROM THE HARMONIZED TARIFF SCHEDULE FOR CONTROLLED SUBSTANCES AND USED CONTROLLED SUBSTANCES
APPENDIX L TO SUBPART A OF PART 82—APPROVED CRITICAL USES AND LIMITING CRITICAL CONDITIONS FOR THOSE USES

Subpart B—Servicing of Motor Vehicle Air Conditioners

82.30 Purpose and scope.
82.32 Definitions.
82.34 Prohibitions and required practices.
82.36 Approved refrigerant handling equipment.
82.38 Approved independent standards testing organizations.
82.40 Technician training and certification.
82.42 Certification, recordkeeping and public notification requirements.
APPENDIX A TO SUBPART B OF PART 82—STANDARD FOR RECYCLE/RECOVER EQUIPMENT
APPENDIX B TO SUBPART B OF PART 82—STANDARD FOR RECOVER EQUIPMENT
APPENDIX C TO SUBPART B OF PART 82—SAE J2788 STANDARD FOR RECOVERY/RECYCLE

AND RECOVERY/RECYCLE/RECHARGING EQUIPMENT FOR HFC–134a REFRIGERANT
APPENDIX D TO SUBPART B OF PART 82—SAE J2810 STANDARD FOR RECOVERY ONLY EQUIPMENT FOR HFC–134a REFRIGERANT
APPENDIX E TO SUBPART B OF PART 82—THE STANDARD FOR AUTOMOTIVE REFRIGERANT RECYCLING EQUIPMENT INTENDED FOR USE WITH BOTH CFC-12 AND HFC-134a
APPENDIX F TO SUBPART B OF PART 82—STANDARD FOR RECOVER-ONLY EQUIPMENT THAT EXTRACTS A SINGLE, SPECIFIC REFRIGERANT OTHER THAN CFC-12 OR HFC-134a

Subpart C—Ban on Nonessential Products Containing Class I Substances and Ban on Nonessential Products Containing or Manufactured With Class II Substances

82.60 Purpose.
82.62 Definitions.
82.64 Prohibitions.
82.65 Temporary exemptions.
82.66 Nonessential Class I products and exceptions.
82.68 Verification and public notice requirements.
82.70 Nonessential Class II products and exceptions.

Subpart D—Federal Procurement

82.80 Purpose and scope.
82.82 Definitions.
82.84 Requirements.
82.86 Reporting requirements.

Subpart E—The Labeling of Products Using Ozone-Depleting Substances

82.100 Purpose.
82.102 Applicability.
82.104 Definitions.
82.106 Warning statement requirements.
82.108 Placement of warning statement.
82.110 Form of label bearing warning statement.
82.112 Removal of label bearing warning statement.
82.114 Compliance by manufacturers and importers with requirements for labeling of containers of controlled substances, or products containing controlled substances.
82.116 Compliance by manufacturers or importers incorporating products manufactured with controlled substances.
82.118 Compliance by wholesalers, distributors and retailers.
82.120 Petitions.
82.122 Certification, recordkeeping, and notice requirements.
82.124 Prohibitions.

Subpart F—Recycling and Emissions Reduction

82.150 Purpose and scope.
82.152 Definitions.
82.154 Prohibitions.
82.155 Safe disposal of appliances.
82.156 Proper evacuation of refrigerant from appliances.
82.157 Appliance maintenance and leak repair.
82.158 Standards for recovery and/or recycling equipment.
82.160 Approved equipment testing organizations.
82.161 Technician certification.
82.162 [Reserved]
82.164 Reclaimer certification.
82.166 Reporting and recordkeeping requirements for leak repair.
82.168 Incorporation by reference.
82.169 Suspension and revocation procedures.
APPENDIX A TO SUBPART F OF PART 82—SPECIFICATIONS FOR REFRIGERANTS
APPENDIX A1 TO SUBPART F OF PART 82—GENERIC MAXIMUM CONTAMINANT LEVELS
APPENDIX B1 TO SUBPART F OF PART 82—PERFORMANCE OF REFRIGERANT RECOVERY, RECYCLING AND/OR RECLAIM EQUIPMENT
APPENDIX B2 TO SUBPART F OF PART 82—PERFORMANCE OF REFRIGERANT RECOVERY, RECYCLING, AND/OR RECLAIM EQUIPMENT
APPENDIX B3 TO SUBPART F OF PART 82—PERFORMANCE OF REFRIGERANT RECOVERY, RECYCLING, AND/OR RECLAIM EQUIPMENT
APPENDIX B4 TO SUBPART F OF PART 82—PERFORMANCE AND SAFETY OF FLAMMABLE REFRIGERANT RECOVERY AND/OR RECYCLING EQUIPMENT
APPENDIX C TO SUBPART F OF PART 82—METHOD FOR TESTING RECOVERY DEVICES FOR USE WITH SMALL APPLIANCES
APPENDIX D TO SUBPART F OF PART 82—STANDARDS FOR BECOMING A CERTIFYING PROGRAM FOR TECHNICIANS
APPENDIX E TO SUBPART F OF PART 82—TEST PROCEDURE FOR LEAKS FROM CONTAINERS HOLDING TWO POUNDS OR LESS OF REFRIGERANT FOR USE IN AN MVAC

Subpart G—Significant New Alternatives Policy Program

82.170 Purpose and scope.
82.172 Definitions.
82.174 Prohibitions.
82.176 Applicability.
82.178 Information required to be submitted.
82.180 Agency review of SNAP submissions.
82.182 Confidentiality of data.
82.184 Petitions.
APPENDIX A TO SUBPART G OF PART 82—SUBSTITUTES SUBJECT TO USE RESTRICTIONS AND UNACCEPTABLE SUBSTITUTES

APPENDIX B TO SUBPART G OF PART 82—SUBSTITUTES SUBJECT TO USE RESTRICTIONS AND UNACCEPTABLE SUBSTITUTES
APPENDIX C TO SUBPART G OF PART 82—SUBSTITUTES SUBJECT TO USE RESTRICTIONS AND UNACCEPTABLE SUBSTITUTES LISTED IN THE MAY 22, 1996 FINAL RULE, EFFECTIVE JUNE 21, 1996
APPENDIX D TO SUBPART G OF PART 82—SUBSTITUTES SUBJECT TO USE RESTRICTIONS AND UNACCEPTABLE SUBSTITUTES
APPENDIX E TO SUBPART G OF PART 82—UNACCEPTABLE SUBSTITUTES LISTED IN THE JANUARY 26, 1999 FINAL RULE, EFFECTIVE JANUARY 26, 1999
APPENDIX F TO SUBPART G OF PART 82—UNACCEPTABLE SUBSTITUTES LISTED IN THE JANUARY 26, 1999 FINAL RULE, EFFECTIVE JANUARY 26, 1999
APPENDIX G TO SUBPART G OF PART 82—SUBSTITUTES SUBJECT TO USE RESTRICTIONS AND UNACCEPTABLE SUBSTITUTES LISTED IN THE MARCH 3, 1999, FINAL RULE, EFFECTIVE APRIL 2, 1999
APPENDIX H TO SUBPART G OF PART 82—SUBSTITUTES SUBJECT TO USE RESTRICTIONS AND UNACCEPTABLE SUBSTITUTES, EFFECTIVE MAY 28, 1999
APPENDIX I TO SUBPART G OF PART 82—SUBSTITUTES SUBJECT TO USE RESTRICTIONS, LISTED IN THE APRIL 26, 2000, FINAL RULE, EFFECTIVE MAY 26, 2000
APPENDIX J TO SUBPART G OF PART 82—SUBSTITUTES LISTED IN THE JANUARY 29, 2002 FINAL RULE, EFFECTIVE APRIL 1, 2002
APPENDIX K TO SUBPART G OF PART 82—SUBSTITUTES SUBJECT TO USE RESTRICTIONS AND UNACCEPTABLE SUBSTITUTES LISTED IN THE JULY 22, 2002, FINAL RULE, EFFECTIVE AUGUST 21, 2002
APPENDIX L TO SUBPART G OF PART 82—SUBSTITUTES LISTED IN THE JANUARY 27, 2003, FINAL RULE, EFFECTIVE MARCH 28, 2003
APPENDIX M TO SUBPART G OF PART 82—UNACCEPTABLE SUBSTITUTES LISTED IN THE SEPTEMBER 30, 2004 FINAL RULE, EFFECTIVE NOVEMBER 29, 2004
APPENDIX N TO SUBPART G OF PART 82 [RESERVED]
APPENDIX O TO SUBPART G OF PART 82—SUBSTITUTES LISTED IN THE SEPTEMBER 27, 2006 FINAL RULE, EFFECTIVE NOVEMBER 27, 2006
APPENDIX P TO SUBPART G OF PART 82—SUBSTITUTES LISTED IN THE SEPTEMBER 27, 2006 FINAL RULE, EFFECTIVE NOVEMBER 27, 2006
APPENDIX Q TO SUBPART G OF PART 82—UNACCEPTABLE SUBSTITUTES LISTED IN THE MARCH 28, 2007 FINAL RULE, EFFECTIVE MAY 29, 2007
APPENDIX R TO SUBPART G OF PART 82—SUBSTITUTES SUBJECT TO USE RESTRICTIONS LISTED IN THE DECEMBER 20, 2011 FINAL RULE, EFFECTIVE FEBRUARY 21, 2012
APPENDIX S TO SUBPART G OF PART 82—SUBSTITUTES LISTED IN THE SEPTEMBER 19, 2012 FINAL RULE, EFFECTIVE DECEMBER 18, 2012.
APPENDIX T TO SUBPART G OF PART 82—SUBSTITUTES LISTED IN THE APRIL 29, 2013 FINAL RULE, EFFECTIVE MAY 29, 2013.
APPENDIX U TO SUBPART G OF PART 82—UNACCEPTABLE SUBSTITUTES AND SUBSTITUTES SUBJECT TO USE RESTRICTIONS LISTED IN THE JULY 20, 2015 FINAL RULE, EFFECTIVE AUGUST 19, 2015
APPENDIX V TO SUBPART G OF PART 82—SUBSTITUTES SUBJECT TO USE RESTRICTIONS AND UNACCEPTABLE SUBSTITUTES LISTED IN THE DECEMBER 1, 2016 FINAL RULE

Subpart H—Halon Emissions Reduction

82.250 Purpose and scope.
82.260 Definitions.
82.270 Prohibitions.

Subpart I—Ban on Refrigeration and Air-Conditioning Appliances Containing HCFCs

82.300 Purpose.
82.302 Definitions.
82.304 Prohibitions.
82.306 Prohibited products.

AUTHORITY: 42 U.S.C. 7414, 7601, 7671–7671q.

SOURCE: 57 FR 33787, July 30, 1992, unless otherwise noted.

Subpart A—Production and Consumption Controls

SOURCE: 60 FR 24986, May 10, 1995, unless otherwise noted.

§ 82.1 Purpose and scope.

(a) The purpose of the regulations in this subpart is to implement the Montreal Protocol on Substances that Deplete the Ozone Layer and sections 602, 603, 604, 605, 606, 607, 614 and 616 of the Clean Air Act Amendments of 1990, Public Law 101–549. The Protocol and section 604 impose limits on the production and consumption (defined as production plus imports minus exports, excluding transhipments and used controlled substances) of certain ozone-depleting substances, according to specified schedules. The Protocol also requires each nation that becomes a Party to the agreement to impose certain restrictions on trade in ozone-depleting substances with non-Parties.

(b) This subpart applies to any person that produces, transforms, destroys,

imports or exports a controlled substance or imports or exports a controlled product.

[63 FR 41642, Aug. 4, 1998]

§ 82.2 [Reserved]

§ 82.3 Definitions for class I and class II controlled substances.

As used in this subpart, the term:

Administrator means the Administrator of the United States Environmental Protection Agency or his or her authorized representative. Starting May 18, 2020, reports and petitions that are available to be submitted through the Central Data Exchange, as well as any related supporting documents, must be submitted through that tool. Any other reports and communications shall be submitted to Stratospheric Protection Manager, 1200 Pennsylvania Ave. NW, Mail Code: 6205T, Washington, DC 20460.

Aircraft halon bottle means a vessel used as a component of an aircraft fire suppression system containing halon-1301 or halon-1211 approved under FAA rules for installation in a certificated aircraft.

Appliance means any device which contains and uses a refrigerant and which is used for household or commercial purposes, including any air conditioner, refrigerator, chiller, or freezer.

Applicator means the person who applies methyl bromide.

Approved critical use(s) means those uses of methyl bromide listed in Column A of appendix L to this subpart as further clarified in Columns B and C of that appendix.

Approved critical user(s) means a person who:

(1) For the applicable control period, applied to EPA for a critical use exemption or is a member of a consortium that applied to EPA for a critical use exemption for a use and location of use that was included in the U.S. nomination, authorized by a Decision of the Parties to the Montreal Protocol, and then finally determined by EPA in a notice-and-comment rulemaking to be an approved critical use; and

(2) Has an area in the applicable location of use that requires methyl bromide fumigation because the person reasonably expects that the area will be subject to a limiting critical condition during the applicable control period.

Article 5 allowances means the allowances apportioned under §§ 82.9(a), 82.11(a)(2), and 82.18(a).

Baseline consumption allowances means the consumption allowances apportioned under §§ 82.6 and 82.19.

Baseline production allowances means the production allowances apportioned under §§ 82.5 and 82.17.

Beijing Amendments means the Montreal Protocol, as amended at the Eleventh Meeting of the Parties to the Montreal Protocol in Beijing in 1999.

Calculated level means the weighted amount of a controlled substance determined by multiplying the amount (in kilograms) of the controlled substance by that substance's ozone depletion potential (ODP) weight listed in appendix A or appendix B to this subpart.

Central Data Exchange means EPA's centralized electronic document receiving system, or its successors.

Class I refers to the controlled substances listed in appendix A to this subpart.

Class II refers to the controlled substances listed in appendix B to this subpart.

Commodity Owner, Shipper or their Agent means the person requesting that an applicator use methyl bromide for quarantine or preshipment applications.

Completely destroy means to cause the expiration of a controlled substance at a destruction efficiency of 98 percent or greater, using one of the destruction technologies approved by the Parties.

Confer means to shift the essential-use allowances obtained under § 82.8 from the holder of the unexpended essential-use allowances to a person for the production of a specified controlled substance.

Consortium means an organization representing a group of methyl bromide users that has collectively submitted an application for a critical use exemption on behalf of all members of the group. The members of a consortium shall be determined on the basis of the rules established by the organization. Members may either be required to formally join the consortium

(*e.g.*, by submitting an application or paying dues) or may automatically become members upon meeting particular criteria (*e.g.*, a grower of a specific crop in a particular region).

Consumption means the production plus imports minus exports of a controlled substance (other than transhipments, or used controlled substances).

Consumption allowances means the privileges granted by this subpart to produce and import controlled substances; however, consumption allowances may be used to produce controlled substances only in conjunction with production allowances. A person's consumption allowances for class I substances are the total of the allowances obtained under §§ 82.6 and 82.7 as may be modified under § 82.12 (transfer of allowances). A person's consumption allowances for class II controlled substances are the total of the allowances obtained under §§ 82.19 and 82.20, as may be modified under § 82.23.

Control period means the period from January 1, 1992 through December 31, 1992, and each twelve-month period from January 1 through December 31, thereafter.

Controlled product means a product that contains a controlled substance listed as a Class I, Group I or II substance in appendix A to this subpart. Controlled products include, but are not limited to, those products listed in appendix D to this subpart.

Controlled products belong to one or more of the following six categories of products:

(1) Automobile and truck air conditioning units (whether incorporated in vehicles or not);

(2) Domestic and commercial refrigeration and air-conditioning/heat pump equipment (whether containing controlled substances as a refrigerant and/or in insulating material of the product), e.g. Refrigerators, Freezers, Dehumidifiers, Water coolers, Ice machines, Air-conditioning and heat pump units;

(3) Aerosol products, except medical aerosols;

(4) Portable fire extinguishers;

(5) Insulation boards, panels and pipe covers;

(6) Pre-polymers.

Controlled substance means any substance listed in appendix A or appendix B to this subpart, whether existing alone or in a mixture, but excluding any such substance or mixture that is in a manufactured product other than a container used for the transportation or storage of the substance or mixture. Thus, any amount of a listed substance in appendix A or appendix B to this subpart that is not part of a use system containing the substance is a controlled substance. If a listed substance or mixture must first be transferred from a bulk container to another container, vessel, or piece of equipment in order to realize its intended use, the listed substance or mixture is a ''controlled substance.'' The inadvertent or coincidental creation of insignificant quantities of a listed substance in appendix A or appendix B to this subpart; during a chemical manufacturing process, resulting from unreacted feedstock, from the listed substance's use as a process agent present as a trace quantity in the chemical substance being manufactured, or as an unintended byproduct of research and development applications, is not deemed a controlled substance. Controlled substances are divided into two classes, Class I in appendix A to this subpart, and Class II listed in appendix B to this subpart. Class I substances are further divided into eight groups, Group I, Group II, Group III, Group IV, Group V, Group VI, Group VII, and Group VIII, as set forth in appendix A to this subpart.

Copenhagen Amendments means the Montreal Protocol on Substances That Deplete the Ozone Layer, as amended at the Fourth Meeting of the Parties to the Montreal Protocol in Copenhagen in 1992.

Critical use means a circumstance in which the following two conditions are satisfied:

(1) There are no technically and economically feasible alternatives or substitutes for methyl bromide available that are acceptable from the standpoint of environment and health and are suitable to the crops and circumstances involved, and

(2) The lack of availability of methyl bromide for a particular use would result in significant market disruption.

Critical use allowance (CUA) means the privilege granted by this subpart to produce or import one (1) kilogram of methyl bromide for an approved critical use during the specified control period. A person's critical use allowances are the total of the allowances obtained under § 82.8(c) as may be modified under § 82.12 (transfer of allowances).

Critical use allowance for pre-plant uses means the privilege granted by this subpart to produce or import one (1) kilogram of methyl bromide solely for an approved critical use in pre-plant categories specified in Appendix L to this subpart during the specified control period. A person's critical use allowances for pre-plant uses are the total of the allowances obtained under § 82.8(c) as may be modified under § 82.12 (transfer of allowances).

Critical use allowance for post-harvest uses means the privilege granted by this subpart to produce or import one (1) kilogram of methyl bromide solely for an approved critical use in post-harvest categories specified in appendix L to this subpart during the specified control period. A person's critical use allowances for post-harvest uses are the total of the allowances obtained under § 82.8(c) as may be modified under § 82.12 (transfer of allowances).

Critical use allowance (CUA) holder means an entity to which EPA allocates a quantity of critical use allowances as reflected in § 82.8(c) or who receives a quantity of critical use allowances through a transfer under § 82.12.

Critical use methyl bromide means the class I, Group VI controlled substance produced or imported through expending a critical use allowance or that portion of inventory produced or imported prior to the January 1, 2005 phaseout date that is sold only for approved critical uses.

Destruction means the expiration of a controlled substance to the destruction and removal efficiency actually achieved, unless considered completely destroyed as defined in this section. Such destruction might result in a commercially useful end product, but such usefulness would be secondary to the act of destruction. Destruction must be achieved using one of the following controlled processes approved by the Parties to the Protocol:

(1) Liquid injection incineration;
(2) Reactor cracking;
(3) Gaseous/fume oxidation;
(4) Rotary kiln incineration;
(5) Cement kiln;
(6) Radio frequency plasma;
(7) Municipal waste incinerators (only for the destruction of foams);
(8) Nitrogen plasma arc;
(9) Portable plasma arc;
(10) Argon plasma arc;
(11) Chemical reaction with hydrogen and carbon dioxide;
(12) Inductively coupled radio frequency plasma;
(13) Microwave plasma;
(14) Porous thermal reactor;
(15) Gas phase catalytic de-halogenation;
(16) Superheated steam reactor; or
(17) Thermal reaction with methane.

Distributor of methyl bromide means the person directly selling a class I, Group VI controlled substance to an applicator.

Essential Metered Dose Inhaler (Essential MDI) means metered dose inhalers for the treatment of asthma and chronic obstructive pulmonary disease, approved by the Food and Drug Administration or by another Party's analogous health authority before December 31, 2000, and considered to be essential by the Party where the MDI product will eventually be sold. In addition, if the MDI product is to be sold in the U.S., the active moiety contained in the MDI must be listed as essential at 21 CFR 2.125(e).

Essential-Use Allowances means the privileges granted by § 82.4(n) to produce class I substances, as determined by allocation decisions made by the Parties to the Montreal Protocol and in accordance with the restrictions delineated in the Clean Air Act Amendments of 1990.

Essential-Use Chlorofluorocarbons (Essential-use CFCs) are the CFCs (CFC-11, CFC-12, or CFC-114) produced under the authority of essential-use allowances and not the allowances themselves. Essential-use CFCs include CFCs imported or produced by U.S. entities under the authority of essential-use allowances for use in essential metered dose inhalers, as well as CFCs imported

or produced by non-U.S. entities under the authority of privileges granted by the Parties and the national authority of another country for use in essential metered dose inhalers.

Essential-Uses means those uses of controlled substances designated by the Parties to the Protocol to be necessary for the health and safety of, or critical for the functioning of, society; and for which there are no available technically and economically feasible alternatives or substitutes that are acceptable from the standpoint of environment and health. Beginning January 1, 2000 (January 1, 2002 for methyl chloroform) the essential use designations for class I substances must be made in accordance with the provisions of the Clean Air Act Amendments of 1990.

Export means the transport of virgin or used controlled substances from inside the United States or its territories to persons outside the United States or its territories, excluding United States military bases and ships for on-board use.

Export production allowances means the privileges granted by § 82.18(b) to produce HCFC-141b for export following the phaseout of HCFC-141b on January 1, 2003.

Exporter means the person who contracts to sell controlled substances for export or transfers controlled substances to his affiliate in another country.

Facility means any process equipment (e.g., reactor, distillation column) used to convert raw materials or feedstock chemicals into controlled substances or consume controlled substances in the production of other chemicals.

Foreign state means an entity which is recognized as a sovereign nation or country other than the United States of America.[1]

Foreign state complying with, when referring to a foreign state not Party to the 1987 Montreal Protocol, the London Amendment, the Copenhagen Amendment, or the Beijing Amendment, means any foreign state that has been determined to be complying with the 1987 Montreal Protocol or the specified amendments by a Meeting of the Parties.

Foreign state not Party to or *Non-Party* means a foreign state that has not deposited instruments of ratification, acceptance, or other form of approval with the Directorate of the United Nations Secretariat, evidencing the foreign state's ratification of the provisions of the 1987 Montreal Protocol, the London Amendment, the Copenhagen Amendment, or the Beijing Amendment, as specified.

Halon bank means a facility run by a national government or privately run and authorized by a national government that collects and stores previously-recovered halon for reuse at a later date.granted to a HCFC-141b formulator; an agency, department, or instrumentality of the U.S.; or a nongovernmental space vehicle entity by this subpart to order production of or to import HCFC-141b, as determined in accordance with § 82.16(h).

Heel means the amount of a controlled substance that remains in a container after it is discharged or offloaded (that is no more than ten percent of the volume of the container).

Hydrostatic testing means checking a gas pressure vessel for leaks or flaws. The vessel is filled with a nearly incompressible liquid—usually water or oil—and examined for leaks or permanent changes in shape.

Import means to land on, bring into, or introduce into, or attempt to land on, bring into, or introduce into any place subject to the jurisdiction of the United States whether or not such landing, bringing, or introduction constitutes an importation within the meaning of the customs laws of the United States, with the following exemptions:

(1) Off-loading used or excess controlled substances or controlled products from a ship during servicing,

(2) Bringing controlled substances into the U.S. from Mexico where the controlled substance had been admitted into Mexico in bond and was of U.S. origin, and

(3) Bringing a controlled product into the U.S. when transported in a consignment of personal or household effects

[1] Taiwan is not considered a foreign state.

or in a similar non-commercial situation normally exempted from U.S. Customs attention.

Importer means any person who imports a controlled substance or a controlled product into the United States. ''Importer'' includes the person primarily liable for the payment of any duties on the merchandise or an authorized agent acting on his or her behalf. The term also includes, as appropriate:

(1) The consignee;

(2) The importer of record;

(3) The actual owner; or

(4) The transferee, if the right to draw merchandise in a bonded warehouse has been transferred.

Individual shipment means the kilograms of a controlled substance for which a person may make one (1) U.S. Customs entry, as identified in the non-objection letter from the Administrator under §§ 82.13(g) and 82.24(c).

Interstate commerce means the distribution or transportation of any controlled substance between one state, territory, possession or the District of Columbia, and another state, territory, possession or the District of Columbia, or the sale, use or manufacture of any controlled substance in more than one state, territory, possession or District of Columbia. The entry points for which a controlled substance is introduced into interstate commerce are the release of a controlled substance from the facility in which the controlled substance was manufactured, the entry into a warehouse from which the domestic manufacturer releases the controlled substance for sale or distribution, and at the site of United States customs clearance.

Limiting critical condition means the regulatory, technical, and economic circumstances listed in Column C of Appendix L to this subpart that establish conditions of critical use for methyl bromide in a fumigation area.

Location of use means the geographic area (such as a state, region, or the entire United States) covered by an application for a critical use exemption in which the limiting critical condition may occur.

London Amendments means the Montreal Protocol, as amended at the Second Meeting of the Parties to the Montreal Protocol in London in 1990.

Manufactured, for an appliance, means the date upon which the appliance's refrigerant circuit is complete, the appliance can function, the appliance holds a full refrigerant charge, and the appliance is ready for use for its intended purposes; and for a precharged appliance component, means the date that such component is completely produced by the original equipment manufacture, charged with refrigerant, and is ready for initial sale or distribution in interstate commerce.

Montreal Anniversary amendments means the Montreal Protocol, as amended at the Ninth Meeting of the Parties to the Montreal Protocol in Montreal in 1997.

Montreal Protocol means the Montreal Protocol on Substances that Deplete the Ozone Layer, a protocol to the Vienna Convention for the Protection of the Ozone Layer, including adjustments adopted by the Parties thereto and amendments that have entered into force.

1987 Montreal Protocol means the Montreal Protocol, as originally adopted by the Parties in 1987.

Non-Objection notice means the privilege granted by the Administrator to import a specific individual shipment of a controlled substance in accordance with §§ 82.13(g)(2), (3), and (5) and 82.24(c)(3), (4), and (6).

Party means a foreign state that has deposited instruments of ratification, acceptance, or other form of approval with the Directorate of the United Nations Secretariat, evidencing the foreign state's ratification of the provisions of the 1987 Montreal Protocol, the London Amendment, the Copenhagen Amendment, or the Beijing Amendment, as specified. (For ratification status, see: *http://ozone.unep.org/new_site/en/treaty_ratification_status.php.*)

Person means any individual or legal entity, including an individual, corporation, partnership, association, state, municipality, political subdivision of a state, Indian tribe; any agency, department, or instrumentality of the United States; and any officer, agent, or employee thereof.

Plant means one or more facilities at the same location owned by or under common control of the same person.

Preshipment applications, with respect to class I, Group VI controlled substances, are those non-quarantine applications applied within 21 days prior to export to meet the official requirements of the importing country or existing official requirements of the exporting country. Official requirements are those which are performed by, or authorized by, a national plant, animal, environmental, health or stored product authority.

Production means the manufacture of a controlled substance from any raw material or feedstock chemical, but does not include:

(1) The manufacture of a controlled substance that is subsequently transformed;

(2) The reuse or recycling of a controlled substance;

(3) Amounts that are destroyed by approved destruction technologies; or

(4) Amounts that are spilled or vented unintentionally.

Production allowances means the privileges granted by this subpart to produce controlled substances; however, production allowances may be used to produce controlled substances only in conjunction with consumption allowances. A person's production allowances for class I substances are the total of the allowances obtained under §§ 82.5, 82.7 and 82.9, and as may be modified under § 82.12 (transfer of allowances). A person's production allowances for class II controlled substances are the total of the allowances obtained under § 82.17 and as may be modified under §§ 82.18 and 82.23.

Quarantine applications, with respect to class I, Group VI controlled substances, are treatments to prevent the introduction, establishment and/or spread of quarantine pests (including diseases), or to ensure their official control, where: (1) Official control is that performed by, or authorized by, a national (including state, tribal or local) plant, animal or environmental protection or health authority; (2) quarantine pests are pests of potential importance to the areas endangered thereby and not yet present there, or present but not widely distributed and being officially controlled. This definition excludes treatments of commodities not entering or leaving the United States or any State (or political subdivision thereof).

Source facility means the location at which a used controlled substance was recovered from a piece of equipment, including the name of the company responsible for, or owning the piece of equipment, a contact person at the location, the mailing address for that specific location, and a phone number and a fax number for the contact person at the location.

Space vehicle means a man-made device, either manned or unmanned, designed for operation beyond earth's atmosphere. This definition includes integral equipment such as models, mock-ups, prototypes, molds, jigs, tooling, hardware jackets, and test coupons. Also included is auxiliary equipment associated with tests, transport, and storage, which through contamination can compromise the space vehicle performance.

Third party applicator means an applicator of critical use methyl bromide who fumigates or treats commodities, structures, crops, or land on behalf of an approved critical user.

Transform means to use and entirely consume (except for trace quantities) a controlled substance in the manufacture of other chemicals for commercial purposes.

Transhipment means the continuous shipment of a controlled substance, from a foreign state of origin through the United States or its territories, to a second foreign state of final destination, as long as the shipment does not enter into United States jurisdiction. A transhipment, as it moves through the United States or its territories, cannot be re-packaged, sorted or otherwise changed in condition.

Unexpended Article 5 allowances means Article 5 allowances that have not been used. At any time in any control period a person's unexpended Article 5 allowances are the total of the level of Article 5 allowances the person has authorization under this subpart to hold at that time for that control period, minus the level of controlled substances that the person has produced in that control period until that time.

Unexpended consumption allowances means consumption allowances that have not been used. At any time in any control period a person's unexpended consumption allowances are the total of the level of consumption allowances the person has authorization under this subpart to hold at that time for that control period, minus the level of controlled substances that the person has produced or imported (not including transhipments and used controlled substances) in that control period until that time.

Unexpended critical use allowances (CUA) means critical use allowances against which methyl bromide has not yet been produced or imported. At any time in any control period a person's unexpended critical use allowances are the total of the level of critical use allowances the person holds at that time for that control period, minus the level of class I, Group VI controlled substances that the person has produced or has imported solely for approved critical uses in that control period.

Unexpended destruction and transformation credits means destruction and transformation credits that have not been used. At any time in any control period a person's unexpended destruction and transformation credits are the total of the level of destruction and transformation credits the person has authorization under this subpart to hold at that time for that control period, minus the level of controlled substances that the person has produced or imported (not including transhipments and used controlled substances) in that control period until that time.

Unexpended essential-use allowances means essential-use allowances that have not been used. At any time in any control period a person's unexpended essential-use allowances are the total of the level of essential-use allowances the person has authorization under this subpart to hold at that time for that control period, minus the level of controlled substances that the person has imported or had produced in that control period until that time.

Unexpended export production allowances means export production allowances that have not been used. A person's unexpended export production allowances are the total of the quantity of the export production allowances the person has authorization under § 82.18(h) to hold for that control period, minus the quantity of class II controlled substances that the person has produced at that time during the same control period.

Unexpended production allowances means production allowances that have not been used. At any time in any control period a person's unexpended production allowances are the total of the level of production allowances he has authorization under this subpart to hold at that time for that control period, minus the level of controlled substances that the person has produced in that control period until that time.

Use of a class II controlled substance, for the purposes of § 82.15 of this subpart, includes but is not limited to, use in a manufacturing process, use in manufacturing a product, intermediate uses such as formulation or packaging for other subsequent uses, and use in maintaining, servicing, or repairing an appliance or other piece of equipment. Use of a class II controlled substance also includes use of that controlled substance when it is removed from a container used for the transportation or storage of the substance but does not include use of a manufactured product containing a controlled substance.

Used controlled substances means controlled substances that have been recovered from their intended use systems (may include controlled substances that have been, or may be subsequently, recycled or reclaimed).

[60 FR 24986, May 10, 1995]

EDITORIAL NOTE: For FEDERAL REGISTER citations affecting § 82.3, see the List of CFR Sections Affected, which appears in the Finding Aids section of the printed volume and at *www.govinfo.gov*.

§ 82.4 Prohibitions for class I controlled substances.

(a)(1) Prior to January 1, 1996, for all Groups of class I controlled substances, and prior to January 1, 2005, for class I, Group VI controlled substances, no person may produce, at any time in any control period, (except that are transformed or destroyed domestically or by a person of another Party) in excess of

the amount of unexpended production allowances or unexpended Article 5 allowances for that substance held by that person under the authority of this subpart at that time for that control period. Every kilogram of excess production constitutes a separate violation of this subpart.

(2) Effective January 1, 2003, production of class I, Group VI controlled substances is not subject to the prohibitions in paragraph (a)(1) of this section if it is solely for quarantine or preshipment applications as defined in this subpart.

(b)(1) Effective January 1, 1996, for any Class I, Group I, Group II, Group III, Group IV, Group V or Group VII controlled substances, and effective January 1, 2005 for any Class I, Group VI controlled substances, and effective August 18, 2003, for any Class I, Group VIII controlled substance, no person may produce, at any time in any control period (except that are transformed or destroyed domestically or by a person of another Party) in excess of the amount of conferred unexpended essential use allowances or exemptions, or in excess of the amount of unexpended critical use allowances, or in excess of the amount of unexpended Article 5 allowances as allocated under § 82.9 and § 82.11, as may be modified under § 82.12 (transfer of allowances) for that substance held by that person under the authority of this subpart at that time for that control period. Every kilogram of excess production constitutes a separate violation of this subpart.

(2) Effective January 1, 2005, production of class I, Group VI controlled substances is not subject to the prohibitions in paragraph (b)(1) of this section if it is solely for quarantine or preshipment applications as defined in this subpart, or it is solely for export to satisfy critical uses authorized by the Parties for that control period.

(c)(1) Prior to January 1, 1996, for all Groups of class I controlled substances, and prior to January 1, 2005, for class I, Group VI controlled substances, no person may produce or (except for transhipments, heels or used controlled substances) import, at any time in any control period, (except for controlled substances that are transformed or destroyed) in excess of the amount of unexpended consumption allowances held by that person under the authority of this subpart at that time for that control period. Every kilogram of excess production or importation (other than transhipments, heels or used controlled substances) constitutes a separate violation of this subpart.

(2) Effective January 1, 2003, production and import of class I, Group VI controlled substances is not subject to the prohibitions in paragraph (c)(1) of this section if it is solely for quarantine or preshipment applications as defined in this subpart.

(d) Effective January 1, 1996, for any class I, Group I, Group II, Group III, Group IV, Group V, or Group VII controlled substances, and effective January 1, 2005, for any class I, Group VI controlled substance, and effective August 18, 2003, for any class I, Group VIII controlled substance, no person may import (except for transhipments or heels), at any time in any control period, (except for controlled substances that are transformed or destroyed) in excess of the amount of unexpended essential use allowances or exemptions, or in excess of unexpended critical use allowances, for that substance held by that person under the authority of this subpart at that time for that control period. Every kilogram of excess importation (other than transhipments or heels) constitutes a separate violation of this subpart. It is a violation of this subpart to obtain unused class I controlled substances under the general laboratory exemption in excess of actual need and to recycle that material for sale into other markets.

(e) Effective January 1, 1996, no person may place an order by conferring essential-use allowances for the production of the class I controlled substance, at any time in any control period, in excess of the amount of unexpended essential-use allowances, held by that person under the authority of this subpart at that time for that control period. Effective January 1, 1996, no person may import a class I controlled substance with essential-use allowances, at any time in any control period, in excess of the amount of unexpended essential-use allowances, held by that person under the authority of

this subpart at that time for that control period. No person may import or place an order for the production of a class I controlled substance with essential-use allowances, at any time in any control period, other than for the class I controlled substance(s) for which they received essential-use allowances under paragraph (u) of this section. Every kilogram of excess production ordered in excess of the unexpended essential-use allowances conferred to the producer constitutes a separate violation of this subpart. Every kilogram of excess import in excess of the unexpended essential-use allowances held at that time constitutes a separate violation of this subpart.

(f) [Reserved]

(g) Effective January 1, 1996, the U.S. total production and importation of a class I controlled substance (except Group VI) as allocated under this section for essential-use allowances and exemptions, and as obtained under § 82.9 for destruction and transformation credits, may not, at any time, in any control period until January 1, 2000, exceed the percent limitation of baseline production in appendix H of this subpart, as set forth in the Clean Air Act Amendments of 1990. No person shall cause or contribute to the U.S. exceedance of the national limit for that control period.

(h) No person may sell in the U.S. any Class I controlled substance produced explicitly for export to an Article 5 country.

(i) Effective January 1, 1995, no person may import, at any time in any control period, a heel of any class I controlled substance that is greater than 10 percent of the volume of the container in excess of the amount of unexpended consumption allowances, or unexpended destruction and transformation credits held by that person under the authority of this subpart at that time for that control period. Every kilogram of excess importation constitutes a separate violation of this subpart.

(j)(1) Effective January 1, 1995, no person may import, at any time in any control period, a used class I controlled substance, except for Group II used controlled substances shipped in aircraft halon bottles for hydrostatic testing, without having received a non-objection notice from the Administrator in accordance with § 82.13(g)(2) and (3). A person who receives a non-objection notice for the import of an individual shipment of used controlled substances may not transfer or confer the right to import and may not import any more than the exact quantity, in kilograms, of the used controlled substance cited in the non-objection notice. Every kilogram of importation of used controlled substance in excess of the quantity cited in the non-objection notice issued by the Administrator in accordance with § 82.13(g)(2) and (3) constitutes a separate violation.

(2) No person may import for purposes of destruction, at any time in any control period, a class I controlled substance for which EPA has apportioned baseline production and consumption allowances, without having submitted a certification of intent to import for destruction to the Administrator and received a non-objection notice in accordance with § 82.13(g)(5). A person issued a non-objection notice for the import of an individual shipment of class I controlled substances for destruction may not transfer or confer the right to import and may not import any more than the exact quantity (in kilograms) of the class I controlled substance stated in the non-objection notice. For imports intended to be destroyed in the United States, a person issued a non-objection notice must destroy the controlled substance within one year of the date stamped on the non-objection letter, may not transfer or confer the right to import, and may not import any more than the exact quantity (in kilograms) of the class I controlled substance stated in the non-objection notice. Every kilogram of import of class I controlled substance in excess of the quantity stated in the non-objection notice issued by the Administrator in accordance with § 82.13(g)(5) constitutes a separate violation of this subpart.

(k)(1) Prior to January 1, 1996, for all Groups of class I controlled substances, and prior to January 1, 2005, for class I, Group VI controlled substances, a person may not use production allowances to produce a quantity of a class I controlled substance unless that person

holds under the authority of this subpart at the same time consumption allowances sufficient to cover that quantity of class I controlled substances nor may a person use consumption allowances to produce a quantity of class I controlled substances unless the person holds under authority of this subpart at the same time production allowances sufficient to cover that quantity of class I controlled substances. However, prior to January 1, 1996, for all class I controlled substances, and prior to January 1, 2005, for class I, Group VI controlled substances, only consumption allowances are required to import, with the exception of transhipments, heels, and used controlled substances. Effective January 1, 1996, for all Groups of class I controlled substances, except Group VI, only essential use allowances or exemptions are required to import class I controlled substances, with the exception of transhipments, heels, used controlled substances, and essential use CFCs.

(2) Notwithstanding paragraph (k)(1) of this section, effective January 1, 2003, for class I, Group VI controlled substances, consumption allowances are not required to import quantities solely for quarantine or preshipment applications as defined in this subpart.

(l) Every kilogram of a controlled substance, and every controlled product, imported or exported in contravention of this subpart constitutes a separate violation of this subpart. No person may:

(1) Import or export any quantity of a controlled substance listed in class I, Group I or Group II, in appendix A to this subpart from or to any foreign state not Party to the 1987 Montreal Protocol unless that foreign state is complying with the 1987 Montreal Protocol (For ratification status, see: *http://ozone.unep.org/new_site/en/treaty_ratification_status.php*);

(2) Import or export any quantity of a controlled substance listed in class I, Group III, Group IV, or Group V, in appendix A to this subpart, from or to any foreign state not Party to the London Amendment, unless that foreign state is complying with the London Amendment (For ratification status, see: *http://ozone.unep.org/new_site/en/treaty_ratification_status.php*); or

(3) Import a controlled product, as noted in appendix D, annex 1 to this subpart, from any foreign state not Party to the 1987 Montreal Protocol, unless that foreign state is complying with the 1987 Montreal Protocol (For ratification status, see: *http://ozone.unep.org/new_site/en/treaty_ratification_status.php*).

(4) Import or export any quantity of a controlled substance listed in class I, Group VII, in appendix A to this subpart, from or to any foreign state not Party to the Copenhagen Amendment, unless that foreign state is complying with the Copenhagen Amendment (For ratification status, see: *http://ozone.unep.org/new_site/en/treaty_ratification_status.php*).

(5) Import or export any quantity of a controlled substance listed in class I, Group VI, in appendix A to this subpart, from or to any foreign state not Party to the Copenhagen Amendment unless that foreign state is complying with the Copenhagen Amendment (For ratification status, see: *http://ozone.unep.org/new_site/en/treaty_ratification_status.php*).

(6) Import or export any quantity of a controlled substance listed in class I, Group VIII, in appendix A to this subpart, from or to any foreign state not Party to the Beijing Amendment, unless that foreign state is complying with the Beijing Amendment (For ratification status, see: *http://ozone.unep.org/new_site/en/treaty_ratification_status.php*).

(m) Effective October 5, 1998, no person may export a controlled product to a Party listed in appendix J of this subpart in any control period after the control period in which EPA publishes a notice in the FEDERAL REGISTER listing that Party in appendix J of this subpart. EPA will publish a notice in the FEDERAL REGISTER that lists a Party in appendix J if the Party formally presents to the U.S. a government document through its embassy in the United States stating that it has established a ban on the import of controlled products and a ban on the manufacture of those same controlled products.

(n) No person may use class I controlled substances produced or imported under the essential use exemption for any purpose other than those set forth in this paragraph. Effective January 1, 1996, essential-use allowances are apportioned to a person under § 82.8(a) and (b) for the exempted production or importation of specified class I controlled substances solely for the purposes listed in paragraphs (n)(1)(i) through (iii) of this section.

(1) Essential-uses for the production or importation of controlled substances as agreed to by the Parties to the Protocol and subject to the periodic revision of the Parties are:

(i) Metered dose inhalers (MDIs) for the treatment of asthma and chronic obstructive pulmonary disease that were approved by the Food and Drug Administration before December 31, 2000.

(ii) Space Shuttle—solvents.

(iii) Essential laboratory and analytical uses (defined in appendix G of this subpart).

(2) Any person acquiring unused class I controlled substances produced or imported under the authority of essential-use allowances or the essential-use exemption granted in § 82.8 to this subpart for use in anything other than an essential-use (*i.e.*, for uses other than those specifically listed in paragraph (n)(1) of this section) is in violation of this subpart. Each kilogram of unused class I controlled substance produced or imported under the authority of essential-use allowances or the essential-use exemption and used for a non-essential use is a separate violation of this subpart. Any person selling unused class I controlled substances produced or imported under authority of essential-use allowances or the essential-use exemption for uses other than an essential-use is in violation of this subpart. Each kilogram of unused class I controlled substances produced or imported under authority of essential-use allowances or the essential-use exemption and sold for a use other than an essential-use is a separate violation of this subpart. It is a violation of this subpart to obtain unused class I controlled substances under the exemption for laboratory and analytical uses in excess of actual need and to recycle that material for sale into other markets.

(o) [Reserved]

(p) Critical Use Exemption: With respect to class I, Group VI substances (methyl bromide):

(1) No person shall sell critical use methyl bromide without first receiving a certification from the purchaser that the quantity purchased will be sold or used solely for an approved critical use. Every kilogram of critical use methyl bromide sold without first obtaining such certification constitutes a separate violation of this subpart.

(2) For approved critical users, each action associated with each 200 kilograms of critical use methyl bromide for the following subparagraphs constitutes a separate violation of this subpart.

(i) No person shall take possession of quantities of critical use methyl bromide or acquire fumigation services using quantities of critical use methyl bromide without first completing the appropriate certification in accordance with the requirements in § 82.13.

(ii) No person who purchases critical use methyl bromide may use such quantities for a use other than the specified critical use listed in column A and the specified location of use in column B of appendix L to this subpart.

(iii) No person who purchases critical use methyl bromide produced or imported with expended critical use allowances for pre-plant uses, may use such quantities for other than the pre-plant uses as specified in column A and column B of appendix L to this subpart.

(iv) No person who purchases critical use methyl bromide produced or imported with expended critical use allowances for post-harvest uses, may use such quantities for other than the post-harvest uses as specified in column A and column B of appendix L to this subpart.

(v) No person who uses critical use methyl bromide on a specific field or structure may concurrently or subsequently use non-critical use methyl bromide on the same field or structure for the same use (as defined in column A and column B of appendix L) in the same control period, excepting methyl

bromide used under the quarantine and pre-shipment exemption.

(vi) No person who purchases critical use methyl bromide during the control period shall use that methyl bromide on a field or structure for which that person has used non-critical use methyl bromide for the same use (as defined in columns A and B of appendix L) in the same control period, excepting methyl bromide used under the quarantine and pre-shipment exemption, unless, subsequent to that person's use of the non-critical use methyl bromide, that person becomes subject to a prohibition on the use of methyl bromide alternatives due to the reaching of a local township limit described in appendix L of this part, or becomes an approved critical user as a result of rulemaking.

(q) Emergency use exemption. [Reserved]

(r) No person may sell or use methyl bromide produced or imported under the quarantine and preshipment exemption for any purpose other than for quarantine applications or preshipment applications as defined in § 82.3. Each kilogram of methyl bromide produced or imported under the authority of the quarantine and preshipment exemption and sold or used for a use other than quarantine or preshipment is a separate violation of this subpart.

(s) No person may sell or distribute, or offer for sale or distribution, any class I substance that they know, or have reason to know, was imported in violation of this section, except for such actions needed to re-export the controlled substance. Every kilogram of a controlled substance imported in contravention of this paragraph (s) that is sold or distributed, or offered for sale or distribution, constitutes a separate violation of this subpart.

[60 FR 24986, May 10, 1995]

EDITORIAL NOTE: For FEDERAL REGISTER citations affecting § 82.4, see the List of CFR Sections Affected, which appears in the Finding Aids section of the printed volume and at *www.govinfo.gov*.

§ 82.5 Apportionment of baseline production allowances for class I controlled substances.

Persons who produced controlled substances in Group I or Group II in 1986 are apportioned baseline production allowances as set forth in paragraphs (a) and (b) of this section. Persons who produced controlled substances in Group III, IV, or V in 1989 are apportioned baseline production allowances as set forth in paragraphs (c), (d), and (e) of this section. Persons who produced controlled substances in Group VI and VII in 1991 are apportioned baseline allowances as set forth in paragraphs (f) and (g) of this section.

Controlled substance	*Person*	*Allowances* (kg)
(a) For Group I controlled substances:		
CFC-11	Allied-Signal, Inc	23,082,358
	E.I. DuPont de Nemours & Co	33,830,000
	Elf Atochem, N.A	21,821,500
CFC-12	Laroche Chemicals	12,856,364
	Allied-Signal, Inc	35,699,776
	E.I. DuPont de Nemours & Co	64,849,000
	Elf Atochem, N.A	31,089,807
CFC-113	Laroche Chemicals	15,330,909
	Allied-Signal, Inc	21,788,896
CFC-114	E.I. DuPont de Nemours & Co	58,553,000
	Allied-Signal, Inc	1,488,569
CFC-115	E.I. DuPont de Nemours & Co	4,194,000
	E.I. DuPont de Nemours & Co	4,176,000
(b) For Group II controlled substances:		
Halon-1211	Great Lakes Chemical Corp	826,487
	ICI Americas, Inc	2,135,484
Halon-1301	E.I. DuPont de Nemours & Co	3,220,000
	Great Lakes Chemical Corp	1,766,850
Halon-2402		
(c) For Group III controlled substances:		

Controlled substance	*Person*	*Allowances* (kg)
CFC-13	Allied-Signal, Inc	127,125
	E.I. DuPont de Nemours & Co	187,831
	Elf Atochem, N.A	3,992
	Great Lakes Chemical Corp	56,381
	Laroche Chemicals	29,025
CFC-111		
CFC-112		
CFC-211	E.I. DuPont de Nemours & Co	11
CFC-212	E.I. DuPont de Nemours & Co	11
CFC-213	E.I. DuPont de Nemours & Co	11
CFC-214	E.I. DuPont de Nemours & Co	11
CFC-215	E.I. DuPont de Nemours & Co	511
	Halocarbon Products Corp	1,270
CFC-216	E.I. DuPont de Nemours & Co	170,574
CFC-217	E.I. DuPont de Nemours & Co	511
(d) For Group IV controlled substances:		
CCl_4	Akzo Chemicals, Inc	7,873,615
	Degussa Corporation	26,546
	Dow Chemical Company, USA	18,987,747
	E.I. DuPont de Nemours & Co	9,099
	Hanlin Chemicals-WV, Inc	219,616
	ICI Americas, Inc	853,714
	Occidental Chemical Corp	1,059,358
	Vulcan Chemicals	21,931,987
(e) For Group V controlled substances:		
Methyl Chloroform	Dow Chemical Company, USA	168,030,117
	E.I. DuPont de Nemours & Co	2
	PPG Industries, Inc	57,450,719
	Vulcan Chemicals	89,689,064
(f) For Group VI controlled substances:		
Methyl Bromide	Great Lakes Chemical Corporation	19,945,788
	Ethyl Corporation	8,233,894
(g) For Group VII controlled substances:		
HBFC 22B1–1	Great Lakes Chemical Corporation	46,211

[60 FR 24986, May 10, 1995, as amended at 68 FR 2848, Jan. 21, 2003]

§ 82.6 Apportionment of baseline consumption allowances for class I controlled substances.

Persons who produced, imported, or produced and imported controlled substances in Group I or Group II in 1986 are apportioned chemical-specific baseline consumption allowances as set forth in paragraphs (a) and (b) of this section. Persons who produced, imported, or produced and imported controlled substances in Group III, Group IV, or Group V in 1989 are apportioned chemical-specific baseline consumption allowances as set forth in paragraphs (c), (d) and (e) of this section. Persons who produced, imported, or produced and imported controlled substances in Group VI or VII in 1991 are apportioned chemical specific baseline consumption allowances as set forth in paragraphs (f) and (g) of this section.

Controlled substance	*Person*	*Allowances (kg)*
(a) For Group I controlled substances:		
CFC-11	Allied-Signal, Inc	22,683,833
	E.I. DuPont de Nemours & Co	32,054,283
	Elf Atochem, N.A	21,740,194
	Hoechst Celanese Corporation	185,396
	ICI Americas, Inc	1,673,436

Controlled substance	*Person*	*Allowances (kg)*
	Kali-Chemie Corporation	82,500
	Laroche Chemicals	12,695,726
	National Refrigerants, Inc	693,707
	Refricentro, Inc	160,697
	Sumitomo Corporation of America	5,800
CFC-12	Allied-Signal, Inc	35,236,397
	E.I. DuPont de Nemours & Co	61,098,726
	Elf Atochem, N.A	32,403,869
	Hoechst Celanese Corporation	138,865
	ICI Americas, Inc	1,264,980
	Kali-Chemie Corporation	355,440
	Laroche Chemicals	15,281,553
	National Refrigerants, Inc	2,375,384
	Refricentro, Inc	242,526
CFC-113	Allied-Signal, Inc	18,241,928
	E.I. DuPont de Nemours & Co	49,602,858
	Elf Atochem, N.A	244,908
	Holchem	265,199
	ICI Americas, Inc	2,399,700
	Refricentro, Inc	37,385
	Sumitomo Corp. of America	280,163
CFC-114	Allied-Signal, Inc	1,429,582
	E.I. DuPont de Nemours & Co	3,686,103
	Elf Atochem, N.A	22,880
	ICI Americas, Inc	32,930
CFC-115	E.I. DuPont de Nemours & Co	2,764,109
	Elf Atochem, N.A	633,007
	Hoechst Celanese Corporation	8,893
	ICI Americas, Inc	2,366,351
	Laroche Chemicals	135,520
	Refricentro, Inc	27,337
	(b) For Group II controlled substances:	
Halon-1211	Elf Atochem, N.A	411,292
	Great Lakes Chemical Corp	772,775
	ICI Americas, Inc	2,116,641
	Kali-Chemie Corporation	330,000
Halon-1301	E.I. DuPont de Nemours & Co	2,772,917
	Elf Atochem, N.A	89,255
	Great Lakes Chemical Corp	1,744,132
	Kali-Chemie Corporation	54,380
Halon-2402	Ausimont	34,400
	Great Lakes Chemical Corp	15,900
	(c) For Group III controlled substances:	
CFC-13	Allied-Signal, Inc	127,124
	E.I. DuPont de Nemours & Co	158,508
	Elf Atochem, N.A	3,992
	Great Lakes Chemical Corp	56,239
	ICI Americas, Inc	5,855
	Laroche Chemicals	29,025
	National Refrigerants, Inc	16,665
CFC-111		
CFC-112	Sumitomo Corp of America	5,912
	TG (USA) Corporation	9,253
CFC-211	E.I. DuPont de Nemours & Co	11
CFC-212	E.I. DuPont de Nemours & Co	11
CFC-213	E.I. DuPont de Nemours & Co	11
CFC-214	E.I. DuPont de Nemours & Co	11
CFC-215	E.I. DuPont de Nemours & Co	511
	Halocarbon Products Corp	1,270
CFC-216	E.I. DuPont de Nemours & Co	170,574
CFC-217	E.I. DuPont de Nemours & Co	511
	(d) For Group IV controlled substances:	
CCl_4	Crescent Chemical Co	56

Controlled substance	*Person*	*Allowances (kg)*
	Degussa Corporation	12,466
	Dow Chemical Company, USA	8,170,561
	E.I. DuPont de Nemours & Co	26,537
	Elf Atochem, N.A	41
	Hanlin Chemicals-WV, Inc	103,133
	Hoechst Celanese Corporation	3
	ICC Chemical Corp	1,173,723
	ICI Americas, Inc	855,466
	Occidental Chemical Corp	497,478
	Sumitomo Corporation of America	9
	(e) For Group V controlled substances:	
Methyl Chloroform	3V Chemical Corp	3,528
	Actex, Inc	50,171
	Atochem North America	74,355
	Dow Chemical Company, USA	125,200,200
	E.I. DuPont de Nemours & Co	2
	IBM	2,026
	ICI Americas, Inc	14,179,850
	Laidlaw	420,207
	PPG Industries	45,254,115
	Sumitomo	1,954
	TG (USA) Corporation	7,073
	Unitor Ships Service, Inc	14,746
	Vulcan Chemicals	70,765,072
	(f) For Group VI controlled substances:	
Methyl Bromide	Great Lakes Chemical Corporation	15,514,746
	Ethyl Corporation	6,379,906
	AmeriBrom, Inc	3,524,393
	TriCal, Inc	109,225
	(g) For Group VII controlled substances:	
HBFC 22B1–1	Great Lakes Chemical Corporation	40,110

[60 FR 24986, May 10, 1995, as amended at 68 FR 2848, Jan. 21, 2003]

§ 82.7 Grant and phase reduction of baseline production and consumption allowances for class I controlled substances.

For each control period specified in the following table, each person is granted the specified percentage of the baseline production and consumption allowances apportioned to him under §§ 82.5 and 82.6 of this subpart.

Control period	Class I substances in groups I and III, (In percent)	Class I substances in group II, (In percent)	Class I substances in group IV (In percent)	Class I substances in group V (In percent)	Class I substances in group VI (In percent)	Class I substances in group VII (In percent)
1994	25	0	50	50	100	100
1995	25	0	15	30	100	100
1996	0	0	0	0	100	0
1997	0	0	0	0	100	0
1998	0	0	0	0	100	0
1999	0	0	0	0	75	0
2000	0	0	0	0	75	0
2001					50	
2002					50	
2003					30	
2004					30	
2005					0	

[65 FR 70803, Nov. 28, 2000]

§ 82.8 Grant of essential use allowances and critical use allowances.

(a) Effective January 1, 1996, persons in the following list are allocated essential-use allowances or exemptions for quantities of a specific class I controlled substance for a specific essential-use (the Administrator reserves the right to revise the allocations based on future decisions of the Parties).

TABLE I—ESSENTIAL USE ALLOWANCES FOR CALENDAR YEAR 2010

(i) Metered Dose Inhalers (for oral inhalation) for Treatment of Asthma and Chronic Obstructive Pulmonary Disease		
Company	Chemical	2010 Quantity (metric tons)
Armstrong	CFC–11 or CFC–12 or CFC–114.	30.0

(b) A global exemption for class I controlled substances for essential laboratory and analytical uses shall be in effect through December 31, 2021, subject to the restrictions in appendix G of this subpart, and subject to the recordkeeping and reporting requirements at § 82.13(u) through (x). There is no amount specified for this exemption.

(c) Effective January 1, 2005, critical use allowances are apportioned as set forth in paragraph (c)(1) of this section for the exempted production and import of class I, Group VI controlled substances specifically for those approved critical uses listed in appendix L to this subpart for the applicable control period. Every kilogram of production and import in excess of the total number and type of unexpended critical use allowances held for a particular type of use constitutes a separate violation of this subpart.

(1) Allocated critical use allowances granted for specified control period.

Company	2016 Critical use allowances for pre-plant uses* (kilograms)	2016 Critical use allowances for post-harvest uses* (kilograms)
Great Lakes Chemical Corp. A Chemtura Company	84,222	1,179
Albemarle Corp.	34,634	485
ICL–IP America	19,140	268
TriCal, Inc.	596	8
Total	*138,592*	*1,939*

*For production or import of Class I, Group VI controlled substance exclusively for the pre-plant or post-harvest uses specified in appendix L to this subpart.

(2) [Reserved]

[69 FR 77003, Dec. 23, 2004]

EDITORIAL NOTE: For FEDERAL REGISTER citations affecting § 82.8, see the List of CFR Sections Affected, which appears in the Finding Aids section of the printed volume and at *www.govinfo.gov*.

§ 82.9 Availability of production allowances in addition to baseline production allowances for class I controlled substances.

(a)—(b) [Reserved]

(c) A company may increase or decrease its production allowances, including its Article 5 allowances, by trading with another Party to the Protocol according to the provision under this paragraph (c). A company may increase or decrease its essential-use allowances for CFCs for use in essential MDIs according to the provisions under this paragraph (c). A nation listed in appendix C to this subpart (Parties to the Montreal Protocol) must agree either to transfer to the person for the current control period some amount of production or import that the nation is permitted under the Montreal Protocol or to receive from the person for the current control period some amount of production or import that the person is permitted under this subpart. If the controlled substance is produced under the authority of production allowances and is to be sold in the United States

or to another Party (not the Party from whom the allowances are received), the U.S. company must expend its consumption allowances allocated under §§ 82.6 and 82.7 in order to produce with the additional production allowances.

(1) For trades from a Party, the person must obtain from the principal diplomatic representative in that nation's embassy in the United States a signed document stating that the appropriate authority within that nation has established or revised production limits or essential-use allowance limits for the nation to equal the lesser of the maximum production that the nation is allowed under the Protocol minus the amount transferred, the maximum production or essential-use allowances that are allowed under the nation's applicable domestic law minus the amount transferred, or the average of the nation's actual national production level for the three years prior to the transfer minus the production transferred. The person must submit to the Administrator a transfer request that includes a true copy of this document and that sets forth the following:

(i) The identity and address of the person;

(ii) The identity of the Party;

(iii) The names and telephone numbers of contact persons for the person and for the Party;

(iv) The chemical type, type of allowance being transferred, and the level of allowances being transferred;

(v) The control period(s) to which the transfer applies; and

(vi) For increased production intended for export to the Party from whom the allowances would be received, a signed statement of intent to export to the Party.

(vii) In the case of transferring essential-use allowances, the transferor must include a signed document from the transferee identifying the CFC MDI products that will be produced using the essential-use allowances.

(2) For trades to a Party, a person must submit a transfer request that sets forth the following:

(i) The identity and address of the person;

(ii) The identity of the Party;

(iii) The names and telephone numbers of contact persons for the person and for the Party;

(iv) The chemical type, type of allowance being transferred, and the level of allowances being transferred; and

(v) The control period(s) to which the transfer applies.

(3) After receiving a transfer request that meets the requirements of paragraph (c)(2) of this section, the Administrator may, at his discretion, consider the following factors in deciding whether to approve such a transfer:

(i) Possible creation of economic hardship;

(ii) Possible effects on trade;

(iii) Potential environmental implications; and

(iv) The total amount of unexpended production or essential-use allowances held by a U.S. entity.

(v) In the case of transfer of essential-use allowances the Administrator may consider whether the CFCs will be used for production of essential MDIs.

(4) The Administrator will issue the person a notice either granting or deducting production allowances, Article 5 allowances, or essential-use allowances, and specifying the control period to which the transfer applies, provided that the request meets the requirement of paragraph (c)(1) of this sections for trades from Parties and paragraph (c)(2) of this section for trades to Parties, unless the Administrator has decided to disapprove the trade under paragraph (c)(3) of this section. For a trade from a Party, the Administrator will issue a notice that revises the allowances held by the person to equal the unexpended production, Article 5, or essential-use allowances held by the person under this subpart plus the level of allowable production transferred from the Party. For a trade to a Party, the Administrator will issue a notice that revises the production limit for the person to equal the lesser of:

(i) The unexpended production allowances, essential-use allowances, or Article 5 allowances held by the person under this subpart minus the amount transferred; or

(ii) The unexpended production allowances, essential-use allowances, or Article 5 allowances held by the person

under this subpart minus the amount by which the United States average annual production of the controlled substance being traded for the three years prior to the transfer is less than the total production allowable for that substance under this subpart minus the amount transferred. The change in allowances will be effective on the date that the notice is issued.

(5) If after one person obtains approval for a trade of allowable production of a controlled substance to a Party, one or more other persons obtain approval for trades involving the same controlled substance and the same control period, the Administrator will issue notices revising the production limits for each of the other persons trading that controlled substance in that control period to equal the lesser of:

(i) The unexpended production allowances or Article 5 allowances held by the person under this subpart minus the amount transferred; or

(ii) The unexpended production allowances or Article 5 allowances held by the person under this subpart minus the amount by which the United States average annual production of the controlled substance being traded for the three years prior to the transfer is less than the total allowable production for that substance under this subpart multiplied by the amount transferred divided by the total amount transferred by all the other persons trading the same controlled substance in the same control period minus the amount transferred by that person.

(iii) The Administrator will also issue a notice revising the production limit for each person who previously obtained approval of a trade of that substance in that control period to equal the unexpended production allowances or unexpended Article 5 allowances held by the person under this subpart plus the amount by which the United States average annual production of the controlled substance being traded for the three years prior to the transfer is less than the total allowable production under this subpart multiplied by the amount transferred by that person divided by the amount transferred by all of the persons who have traded that controlled substance in that control period. The change in production allowances or Article 5 allowances will be effective on the date that the notice is issued.

(d) Effective January 1, 1996, there will be no trade in production or consumption allowances with other Parties to the Protocol for class I controlled substances, except for class I, Group VI, methyl bromide.

(e)—(f) [Reserved]

(g) *International transfer of essential-use CFCs.* (1) For trades of essential-use CFCs where the transferee or the transferor is a person in another nation (Party), the persons involved in the transfer must submit the information requested in § 82.12(d)(2) and (d)(3), along with a signed document from the principal diplomatic representative in the Party's embassy in the United States stating that the appropriate authority within that nation has approved the transfer of the essential-use CFCs.

(2) If the transfer claim is complete, and EPA does not object to the transfer, then EPA will issue letters to the transferor and the transferee indicating that the transfer may proceed. EPA reserves the right to disallow a transfer if the transfer request is incomplete, or if it has reason to believe that the transferee plans to produce MDIs that are not essential MDIs. If EPA objects to the transfer, EPA will issue letters to the transferor and transferee stating the basis for disallowing the transfer. The burden of proof is placed on the transferee to retain sufficient records to prove that the transferred essential-use CFCs are used only for production of essential MDIs. If EPA ultimately finds that the transferee did not use the essential-use CFCs for production of essential MDIs then the transferee is in violation of this subpart.

[60 FR 24986, May 10, 1995, as amended at 63 FR 41643, Aug. 4, 1998; 63 FR 53290, Oct. 5, 1998; 65 FR 70804, Nov. 28, 2000; 67 FR 6360, Feb. 11, 2002; 67 FR 21134, Apr. 29, 2002; 70 FR 77047, Dec. 29, 2005; 85 FR 15292, Mar. 17, 2020]

§ 82.10 [Reserved]

§ 82.11 Exports of class I controlled substances to Article 5 Parties.

(a) If apportioned Article 5 allowances under § 82.9(a) or § 82.11(a)(2), a person may produce Class I controlled substances, in accordance with the prohibitions in § 82.4 and the reduction schedule in § 82.11(a)(3), to be exported (not including exports resulting in transformation or destruction, or exports of used controlled substances) to foreign states listed in appendix E to this subpart (Article 5 countries).

(1) A person must submit a notice to the Administrator of exports to Article 5 countries (except exports resulting in transformation or destruction, or used controlled substances) at the end of the quarter that includes the following:

(i) The identities and addresses of the exporter and the Article 5 country recipient of the exports;

(ii) The exporter's Employee Identification Number;

(iii) The names and telephone numbers of contact persons for the exporter and for the recipient;

(iv) The quantity and the type of controlled substances exported, its source and date purchased;

(v) The date on which, and the port from which, the controlled substances were exported from the United States or its territories;

(vi) The Article 5 country to which the controlled substances were exported;

(vii) A copy of the bill of lading and invoice indicating the net quantity shipped and documenting the sale of the controlled substances to the Article 5 purchaser;

(viii) The commodity code of the controlled substance exported; and

(ix) A copy of the invoice or sales agreement covering the sale of the controlled substances to the recipient Article 5 country that contains provisions forbidding the reexport of the controlled substance in bulk form and subjecting the recipient or any transferee of the recipient to liquidated damages equal to the resale price of the controlled substances if they are reexported in bulk form.

(2) Persons who reported exports of Class I, Group I controlled substances to Article 5 countries in 2000–2003 are apportioned baseline Article 5 allowances as set forth in § 82.11(a)(2)(i). Persons who reported exports of Class I, Group VI controlled substances to Article 5 countries in 1995–1998 are apportioned baseline Article 5 allowances as set forth in § 82.11(a)(2)(ii)).

(i) For Group I Controlled Substances

Controlled Substance	Person	Allowances (kg)
CFC–11	Honeywell	7,150
	Sigma Aldrich	1
CFC–113	Fisher Scientific	5
	Honeywell	313,686
	Sigma Aldrich	48
CFC–114	Honeywell	24,798
	Sigma Aldrich	1

(ii) For Group VI Controlled Substances

Controlled Substance	Person	Allowances (kg)
Methyl Bromide	Albemarle	1,152,714
	Ameribrom	176,903
	Great Lakes Chemical Corporation.	3,825,846

(3) Phased Reduction Schedule for Article 5 Allowances allocated in § 82.11. For each control period specified in the following table, each person is granted the specified percentage of the baseline Article 5 allowances apportioned under § 82.11.

Control Period	Class I substances in group I (In percent)	Class I substances in group VI (In percent)
2006	50	80
2007	15	80
2008	15	80
2009	15	80
2010	0	80
2011	0	80
2012	0	80
2013	0	80
2014	0	80
2015	0	0

(2) [Reserved]

(b) [Reserved]

[60 FR 24986, May 10, 1995, as amended at 70 FR 77047, Dec. 29, 2005]

§ 82.12 Transfers of allowances for class I controlled substances.

(a) *Inter-company transfers.* (1) After January 1, 2002, any essential-use allowance holder (including those persons that hold essential-use allowances

issued by a Party other than the United States) (''transferor'') may transfer essential-use allowances for CFCs to a metered dose inhaler company solely for the manufacture of essential MDIs. After January 1, 2005, any critical use allowance holder (''transferor'') may transfer critical use allowances to any other person (''transferee'').

(i) The transferor must submit to the Administrator a transfer claim setting forth the following:

(A) The identities and addresses of the transferor and the transferee;

(B) The name and telephone numbers of contact persons for the transferor and the transferee;

(C) The type of allowances being transferred, including the names of the controlled substances for which allowances are to be transferred;

(D) The group of controlled substances to which the allowances being transferred pertains;

(E) The amount of allowances being transferred;

(F) The control period(s) for which the allowances are being transferred;

(G) The amount of unexpended allowances of the type and for the control period being transferred that the transferor holds under authority of this subpart as of the date the claim is submitted to EPA; and

(H) The one percent offset applied to the unweighted amount traded will be deducted from the transferor's production or consumption allowance balance (except for trades from transformers and destroyers to producers or importers for the purpose of allowance reimbursement). In the case of transferring essential use allowances, the amount of one tenth of one percent of the amount traded will be deducted from the transferor's allowance balance. In the case of transferring critical use allowances, the amount of one tenth of one percent of the amount traded will be deducted from the transferor's critical use allowance balance.

(I) The transferor must include a signed document from the transferee identifying the CFC MDI products that will be produced using the essential-use allowances.

(ii) The Administrator will determine whether the records maintained by EPA, taking into account any previous transfers and any production, allowable imports and exports of controlled substances reported by the transferor, indicate that the transferor possesses, as of the date the transfer claim is processed, unexpended allowances sufficient to cover the transfer claim (*i.e.*, the amount to be transferred plus, in the case of transferors of essential use allowances and critical use allowances, one tenth of one percent of the transferred amount). Within three working days of receiving a complete transfer claim, the Administrator will take action to notify the transferor and transferee as follows:

(A) If EPA's records show that the transferor has sufficient unexpended allowances to cover the transfer claim, the Administrator will issue a notice indicating that EPA does not object to the transfer and will reduce the transferor's balance of unexpended allowances by the amount to be transferred plus, in the case of transfers of production or consumption allowances, one percent of that amount, or in the case of transfers of essential use allowances, one tenth of one percent of that amount. When EPA issues a no objection notice, the transferor and the transferee may proceed with the transfer. However, if EPA ultimately finds that the transferor did not have sufficient unexpended allowances to cover the claim, the transferor and transferee will be held liable for any violations of the regulations of this subpart that occur as a result of, or in conjunction with, the improper transfer.

(B) If EPA's records show that the transferor has insufficient unexpended allowances to cover the transfer claim, or that the transferor has failed to respond to one or more Agency requests to supply information needed to make a determination, the Administrator will issue a notice disallowing the transfer. Within 10 working days after receipt of notification, either party may file a notice of appeal, with supporting reasons, with the Administrator. The Administrator may affirm or vacate the disallowance. If no appeal is taken by the tenth working day after notification, the disallowance shall be final on that day.

(iii) In the event that the Administrator does not respond to a transfer claim within the three working days specified in paragraph (a)(1)(ii) of this section the transferor and transferee may proceed with the transfer. EPA will reduce the transferor's balance of unexpended allowances by the amount to be transferred plus, in the case of transfers of production or consumption allowances, one percent of that amount, and in the case of essential use allowances and critical use allowances, one tenth of one percent of that amount. However if EPA ultimately finds that the transferor did not have sufficient unexpended allowances to cover the claim, the transferor and transferee will be held liable for any violations of the regulations of this subpart that occur as a result of, or in conjunction with, the improper transfer.

(2) [Reserved]

(b)—(c) [Reserved]

(d) *Transfers of essential-use CFCs.* (1) Effective January 1, 2002, any metered dose inhaler company (transferor) may transfer essential-use CFCs to another metered dose inhaler company (transferee) provided that the Administrator approves the transfer.

(2) The transferee must submit a transfer claim to the Administrator for approval before the transfer can take place. The transfer claim must set forth the following:

(i) The identities and addresses of the transferor and the transferee; and

(ii) The name and telephone numbers of contact persons for the transferor and the transferee; and

(iii) The amount of each controlled substance (CFC-11, CFC-12, or CFC-114) being transferred; and

(iv) The specific metered dose inhaler products (i.e. the MDI drug product or active moiety) that the transferee plans to produce with the transferred CFCs; and

(v) The country(ies) where the CFC metered dose inhalers produced with the transferred essential-use CFCs will be sold if other than in the United States; and

(vi) Certification that the essential-use CFCs will be used in the production of essential MDIs. If the MDIs are to be sold in the United States, the certification must state that MDIs produced with the transferred essential-use CFCs are listed as essential at 21 CFR 2.125, and were approved by the Food and Drug Administration before December 31, 2000. If the MDIs produced with the essential-use CFCs are to be sold outside the United States, the transferee must certify that the metered dose inhalers produced with the essential-use CFCs are considered essential by the importing country.

(3) The transferor must submit a letter stating that it concurs with the terms of the transfer as requested by the transferee.

(4) Once the transfer claim is complete, and if EPA does not object to the transfer, then EPA will issue letters to the transferor and the transferee within 10 business days indicating that the transfer may proceed. EPA reserves the right to disallow a transfer if the transfer request is incomplete, or if it has reason to believe that the transferee plans use the essential-use CFCs in anything other than essential MDIs. If EPA objects to the transfer, within EPA will issue letters to the transferor and transferee stating the basis for disallowing the transfer. The burden of proof is placed on the transferee to retain sufficient records to prove that the transferred essential-use CFCs are used only for production of essential MDIs. If EPA ultimately finds that the transferee did not use the essential-use CFCs for production of essential MDIs then the transferee is in violation of this subpart.

[60 FR 24986, May 10, 1995, as amended at 65 FR 70804, Nov. 28, 2000; 66 FR 1471, Jan. 8, 2001; 67 FR 6361, Feb. 11, 2002; 69 FR 77004, Dec. 23, 2004; 79 FR 44311, July 31, 2014; 85 FR 15292, Mar. 17, 2020]

§ 82.13 Recordkeeping and reporting requirements for class I controlled substances.

(a) *Effective dates.* Unless otherwise specified, the recordkeeping and reporting requirements set forth in this section take effect on January 1, 1995. For class I, Group VIII controlled substances, the recordkeeping and reporting requirements set forth in this section take effect on August 18, 2003. For critical use methyl bromide, the recordkeeping and reporting requirements

set forth in this section take effect January 1, 2005.

(b) Reports and records required by this section may be used for purposes of compliance determinations. These requirements are not intended as a limitation on the use of other evidence admissible under the Federal Rules of Evidence. Failure to provide the reports, petitions and records required by this section, and to certify the accuracy of the information in the reports, petitions and records required by this section, will be considered a violation of this subpart. False statements made in reports, petitions and records will be considered violations of Section 113 of the Clean Air Act.

(c) *Timing of reports.* Unless otherwise specified, reports required by this section must be submitted to the Administrator within 45 days of the end of the applicable reporting period. Revisions of reports that are required by this section must be submitted to the Administrator within 180 days of the end of the applicable reporting period, unless otherwise specified. Starting May 18, 2020, reports that are available for submission through the Central Data Exchange must be submitted electronically through that tool.

(d) Records and copies of reports required by this section must be retained for three years.

(e) In reports required by this section, quantities of controlled substances must be stated in terms of kilograms.

(f) *Producers.* Every person (''producer'') who produces class I controlled substances during a control period must comply with the following recordkeeping and reporting requirements:

(1) Within 120 days of May 10, 1995, or within 120 days of the date that a producer first produces a class I controlled substance, whichever is later, and within 120 days of July 18, 2003 for class I, Group VIII controlled substances, every producer who has not already done so must submit to the Administrator a report describing:

(i) The method by which the producer in practice measures daily quantities of controlled substances produced;

(ii) Conversion factors by which the daily records as currently maintained can be converted into kilograms of controlled substances produced, including any constants or assumptions used in making those calculations (e.g., tank specifications, ambient temperature or pressure, density of the controlled substance);

(iii) Internal accounting procedures for determining plant-wide production;

(iv) The quantity of any fugitive losses accounted for in the production figures; and

(v) The estimated percent efficiency of the production process for the controlled substance. Within 60 days of any change in the measurement procedures or the information specified in the above report, the producer must submit a report specifying the revised data or procedures to the Administrator.

(2) *Recordkeeping requirements* Every producer of a class I controlled substance during a control period must maintain the following records:

(i) Dated records of the quantity of each controlled substance produced at each facility;

(ii) Dated records of the quantity of controlled substances produced for use in processes that result in their transformation or for use in processes that result in their destruction and quantity sold for use in processes that result in their transformation or for use in processes that result in their destruction;

(iii) Dated records of the quantity of controlled substances produced for an essential-use and quantity sold for use in an essential-use process;

(iv)—(v) [Reserved]

(vi) Copies of invoices or receipts documenting sale of controlled substance for use in processes resulting in their transformation or for use in processes resulting in destruction;

(vii) Dated records of the quantity of each controlled substance used at each facility as feedstocks or destroyed in the manufacture of a controlled substance or in the manufacture of any other substance, and any controlled substance introduced into the production process of the same controlled substance at each facility;

(viii) Dated records identifying the quantity of each chemical not a controlled substance produced within each

facility also producing one or more controlled substances;

(ix) Dated records of the quantity of raw materials and feedstock chemicals used at each facility for the production of controlled substances;

(x) Dated records of the shipments of each controlled substance produced at each plant;

(xi) The quantity of controlled substances, the date received, and names and addresses of the source of used materials containing controlled substances which are recycled or reclaimed at each plant;

(xii) Records of the date, the controlled substance, and the estimated quantity of any spill or release of a controlled substance that equals or exceeds 100 pounds;

(xiii) Internal Revenue Service Certificates in the case of transformation, or the destruction verification in the case of destruction (as in § 82.13(k)), showing that the purchaser or recipient of a controlled substance, in the United States or in another country that is a Party, certifies the intent to either transform or destroy the controlled substance, or sell the controlled substance for transformation or destruction in cases when production and consumption allowances were not expended;

(xiv) Written verifications that essential-use allowances were conveyed to the producer for the production of specified quantities of a specific controlled substance that will only be used for the named essential-use and not resold or used in any other manufacturing process;

(xv) Written certifications that quantities of controlled substances, meeting the purity criteria in appendix G of this subpart, were purchased by distributors of laboratory supplies or by laboratory customers to be used only in essential laboratory and analytical uses as defined by appendix G, and not to be resold or used in manufacturing;

(xvi) [Reserved]

(xvii) For methyl bromide, dated records of the quantity of controlled substances produced for quarantine and preshipment applications and quantity sold for quarantine and preshipment applications;

(xviii) Written certifications that quantities of methyl bromide produced solely for quarantine and preshipment applications were purchased by distributors or applicators to be used only for quarantine applications and preshipment applications in accordance with the definitions in this subpart; and

(xix) Written verifications from a U.S. purchaser that methyl bromide produced solely for quarantine and preshipment applications, if exported, will be exported solely for quarantine applications and preshipment applications upon receipt of a certification in accordance with the definitions of this subpart and requirements in paragraph (h) of this section.

(xx) For methyl bromide, dated records such as invoices and order forms, and a log of the quantity of controlled substances produced for critical use, specifying quantities dedicated for pre-plant use and quantities dedicated for post-harvest use, and the quantity sold for critical use, specifying quantities dedicated for pre-plant use and quantities dedicated for post-harvest use;

(xxi) Written certifications that quantities of methyl bromide produced for critical use were purchased by distributors, applicators, or approved critical users to be used or sold only for critical use in accordance with the definitions and prohibitions in this subpart. Certifications must be maintained by the producer for a minimum of three years; and

(xxii) For methyl bromide, dated records such as invoices and order forms, and a log of the quantity of controlled substances produced solely for export to satisfy critical uses authorized by the Parties for that control period, and the quantity sold solely for export to satisfy critical uses authorized by the Parties for that control period.

(3) *Reporting requirements—producers.* For each quarter, except as specified below, each producer of a class I controlled substance must provide the Administrator with a report containing the following information:

(i) The production by company in that quarter of each controlled substance, specifying the quantity of any

controlled substance used in processing, resulting in its transformation by the producer;

(ii) The amount of production for use in processes resulting in destruction of controlled substances by the producer;

(iii) The levels of production (expended allowances and credits) for each controlled substance;

(iv) [Reserved]

(v) The amount of controlled substance sold or transferred during the quarter to a person other than the producer for use in processes resulting in its transformation or eventual destruction;

(vi) A list of the quantities and names of controlled substances exported, by the producer and or by other U.S. companies, to a Party to the Protocol that will be transformed or destroyed and therefore were not produced expending production or consumption allowances;

(vii) For transformation in the United States or by a person of another Party, one copy of an IRS certification of intent to transform the same controlled substance for a particular transformer and a list of additional quantities shipped to that same transformer for the quarter;

(viii) For destruction in the United States or by a person of another Party, one copy of a destruction verification (as under § 82.13(k)) for a particular destroyer, destroying the same controlled substance, and a list of additional quantities shipped to that same destroyer for the quarter;

(ix) [Reserved]

(x) A list of the essential-use allowance holders, distributors of laboratory supplies and laboratory customers from whom orders were placed and the quantity of specific essential-use controlled substances requested and produced;

(xi) The certifications from essential-use allowance holders stating that the controlled substances were purchased solely for specified essential uses and will not be resold or used in any other manufacturing process;

(xii) In the case of laboratory essential-uses, certifications from distributors of laboratory supplies that controlled substances were purchased for sale to laboratory customers who certify that the substances will only be used for essential laboratory and analytical uses as defined by appendix G of this subpart, and will not be resold or used in manufacturing; or, if sales are made directly to laboratories, certification from laboratories that the controlled substances will only be used for essential laboratory and analytical uses (defined at appendix G of this subpart) and will not be resold or used in manufacturing.

(xiii) The amount of methyl bromide sold or transferred during the quarter to a person other than the producer solely for quarantine and preshipment applications;

(xiv) A list of the quantities of methyl bromide produced by the producer and exported by the producer and/or by other U.S. companies, to a Party to the Protocol that will be used solely for quarantine and preshipment applications and therefore were not produced expending production or consumption allowances; and

(xv) For quarantine and preshipment applications of methyl bromide in the United States or by a person of another Party, one copy of a certification that the material will be used only for quarantine and preshipment applications in accordance with the definitions in this subpart from each recipient of the material and a list of additional quantities shipped to that same person for the quarter.

(xvi) For critical uses of methyl bromide, producers shall report annually the amount of critical use methyl bromide owned by the reporting entity, specifying quantities dedicated for pre-plant use and quantities dedicated for post-harvest use, as well as quantities held by the reporting entity on behalf of another entity, specifying quantities dedicated for pre-plant use and quantities dedicated for post-harvest use along with the name of the entity on whose behalf the material is held; and

(xvii) A list of the quantities of methyl bromide produced by the producer and exported by the producer and/or by other U.S. companies in that control period, solely to satisfy the critical uses authorized by the Parties for that control period; and

(xviii) On an annual basis, the amount of methyl bromide produced or

imported prior to the January 1, 2005, phaseout date owned by the reporting entity, as well as quantities held by the reporting entity on behalf of another entity, specifying the name of the entity on whose behalf the material is held.

(4) For any person who fails to maintain the records required by this paragraph, or to submit the report required by this paragraph, the Administrator may assume that the person has produced at full capacity during the period for which records were not kept, for purposes of determining whether the person has violated the prohibitions at § 82.4.

(g) *Importers*. Importers of class I controlled substances during a control period must comply with record-keeping and reporting requirements specified in this paragraph (g).

(1) *Recordkeeping—importers*. Any importer of a class I controlled substance (including used, recycled and reclaimed controlled substances) must maintain the following records:

(i) The quantity of each controlled substance imported, either alone or in mixtures, including the percentage of each mixture which consists of a controlled substance;

(ii) The quantity of those controlled substances imported that are used (including recycled or reclaimed) and, where applicable, the information provided with the petition as under paragraph (g)(2) of this section;

(iii) The quantity of controlled substances other than transhipments or used, recycled or reclaimed substances imported for use in processes resulting in their transformation or destruction and quantity sold for use in processes that result in their destruction or transformation;

(iv) The date on which the controlled substances were imported;

(v) The port of entry through which the controlled substances passed;

(vi) The country from which the imported controlled substances were imported;

(vii) The commodity code for the controlled substances shipped, which must be one of those listed in Appendix K to this subpart;

(viii) The importer number for the shipment;

(ix) A copy of the bill of lading for the import;

(x) The invoice for the import;

(xi) The quantity of imports of used, recycled, or reclaimed class I controlled substances;

(xii) The U.S. Customs entry number;

(xiii) Dated records documenting the sale or transfer of controlled substances for use in processes resulting in transformation or destruction;

(xiv) Copies of IRS certifications that the controlled substance will be transformed or destruction verifications that it will be destroyed (as in § 82.13(k));

(xv) Dated records of the quantity of controlled substances imported for an essential use; and

(xvi) Copies of certifications that imported controlled substances are being purchased for essential laboratory and analytical uses (defined at appendix G of this subpart) or being purchased for eventual sale to laboratories that certify that controlled substances are for essential laboratory and analytical uses (defined at appendix G of this subpart).

(xvii) Dated records of the quantity of methyl bromide imported for quarantine and preshipment applications and quantity sold for quarantine and preshipment applications;

(xviii) Written certifications that quantities of methyl bromide imported solely for quarantine and preshipment applications were purchased by distributors or applicators to be used only for quarantine and preshipment applications in accordance with the definitions in this subpart; and

(xix) Written verifications from a U.S. purchaser that methyl bromide imported solely for quarantine and preshipment applications, if exported, will be exported solely for quarantine and preshipment applications upon receipt of a certification in accordance with the definitions of this subpart and requirements in paragraph (h) of this section.

(xx) For methyl bromide, dated records such as invoices and order forms, of the quantity of controlled substances imported for critical use, specifying quantities dedicated for preplant use and quantities dedicated for post-harvest use, and the quantity sold

for critical use, specifying quantities dedicated for pre-plant use and quantities dedicated for post-harvest use; and

(xxi) Written certifications that quantities of methyl bromide imported for critical use were purchased by distributors, applicators, or approved critical users to be used or sold only for critical use in accordance with the definitions and prohibitions in this subpart. Certifications must be maintained by an importer for a minimum of three years.

(2) *Petitioning—importers of used, recycled, or reclaimed controlled substances.* For each individual shipment over 5 pounds of a used controlled substance as defined in §82.3, except for Group II used controlled substances shipped in aircraft halon bottles for hydrostatic testing and imports intended for destruction, an importer must submit directly to the Administrator, at least 40 working days before the shipment is to leave the foreign port of export, the following information in a petition:

(i) Name, commodity code, and quantity in kilograms of the used controlled substance to be imported;

(ii) Name and address of the importer, the importer ID number, and the contact person's name, email address, and phone number;

(iii) Name, address, contact person, email address, and phone number of all previous source facilities from which the used controlled substance was recovered or the halon bank storing the controlled substance;

(iv) A detailed description of the previous use of the controlled substance at each source facility and a best estimate of when the specific controlled substance was put into the equipment at each source facility, and, when possible, documents indicating the date the material was put into the equipment;

(v) A list of the name, make and model number of the equipment from which the material was recovered at each source facility;

(vi) Name, address, contact person, email address, and phone number of the exporter and of all persons to whom the material was transferred or sold after it was recovered from the source facility;

(vii) The U.S. port of entry for the import, the expected date of shipment and the vessel transporting the chemical. If at the time of submitting a petition the importer does not know the U.S. port of entry, the expected date of shipment and the vessel transporting the chemical, and the importer receives a non-objection notice for the individual shipment in the petition, the importer is required to notify the Administrator of this information prior to the actual U.S. Customs entry of the individual shipment;

(viii) A description of the intended use of the used controlled substance, and, when possible, the name, address, contact person, email address, and phone number of the ultimate purchaser in the United States;

(ix) Name, address, contact person, email address, and phone number of the U.S. reclamation facility, where applicable;

(x) If someone at the source facility recovered the controlled substance from the equipment, the name, email address, and phone number of that person;

(xi) If the imported controlled substance was reclaimed in a foreign Party, the name, address, contact person, email address, and phone number of any or all foreign reclamation facility(ies) responsible for reclaiming the cited shipment;

(xii) The export license, application for an export license, or official communication acknowledging the export from the appropriate government agency in the country of export and, if recovered in another country, the export license or official communication from the appropriate government agency in that country, and quantity authorized for export in kilograms on the export license, and an English translation of these documents;

(xiii) If the imported used controlled substance is intended to be sold as a refrigerant in the United States, the name, address, and email address of the EPA-certified U.S. reclaimer who will bring the material to the standard required under subpart F of this part if not already reclaimed to those specifications; and

(xiv) [Reserved]

(xv) If the used controlled substance is stored in a halon bank, in lieu of the information required in paragraphs (g)(2)(iv) through (vi) of this section, the petitioner may provide an official letter from the appropriate government agency in the country where the material is stored indicating that the halon is used and that the halon bank is authorized to collect used halon. If source information in paragraphs (g)(2)(iv) through (vi) is available, it should also be provided in addition to the letter.

(3) *Review of petition to import a used substance.* Starting on the first working day following receipt by the Administrator of a petition to import a used class I controlled substance, the Administrator will initiate a review of the information submitted under paragraph (g)(2) of this section and take action within 40 working days to issue either an objection-notice or a non-objection notice for the individual shipment to the person who submitted the petition to import the used class I controlled substance.

(i) For the following reasons, the Administrator may issue an objection notice to a petition:

(A) If the Administrator determines that the information is insufficient, that is, if the petition lacks or appears to lack any of the information required under paragraph (g)(2) of this section or other information that may be requested during the review of the petition necessary to verify that the controlled substance is used;

(B) If the Administrator determines that any portion of the petition contains false or misleading information, or the Administrator has information from other U.S. or foreign government agencies indicating that the petition contains false or misleading information;

(C) If the importer wishes to import a used class I controlled substance from a country which is, for that particular controlled substance, out of compliance regarding its phaseout obligations under the Protocol or the transaction in the petition is contrary to other provisions in the Vienna Convention or the Montreal Protocol;

(D) If the appropriate government agency in the exporting country has not agreed to issue an export license for the cited individual shipment of used controlled substance;

(E) If allowing the import of the used class I controlled substance would run counter to government restrictions from either the country of recovery or export regarding controlled ozone-depleting substances;

(F) If reclamation capacity is installed or is being installed for that specific controlled substance in the country of recovery or country of export and the capacity is funded in full or in part through the Multilateral Fund.

(ii) Within ten (10) working days after receipt of the objection notice, the importer may re-petition the Administrator, only if the Administrator indicated ''insufficient information'' as the basis for the objection notice. If no appeal is taken by the tenth working day after the date on the objection notice, the objection shall become final. Only one appeal of re-petition will be accepted for any petition received by EPA.

(iii) Any information contained in the re-petition which is inconsistent with the original petition must be identified and a description of the reason for the inconsistency must accompany the re-petition.

(iv) In cases where the Administrator does not object to the petition based on the criteria listed in paragraph (g)(3)(i) of this section, the Administrator will issue a non-objection notice.

(v) To pass the approved used class I controlled substances through U.S. Customs, the non-objection notice issued by EPA must accompany the shipment through U.S. Customs.

(vi) If for some reason, following EPA's issuance of a non-objection notice, new information is brought to EPA's attention which shows that the non-objection notice was issued based on false information, then EPA has the right to:

(A) Revoke the non-objection notice;

(B) Pursue all means to ensure that the controlled substance is not imported into the United States; and

(C) Take appropriate enforcement actions.

(vii) A person receiving the non-objection notice is permitted to import

the individual shipment only within one year of the date stamped on the non-objection notice.

(viii) A person receiving a non-objection notice from the Administrator for a petition to import used class I controlled substances must maintain the following records:

(A) a copy of the petition;

(B) the EPA non-objection notice;

(C) the bill of lading for the import; and

(D) The U.S. Customs entry number.

(4) *Reporting requirements—importers.* For each quarter, except as specified below, every importer of a class I controlled substance (including importers of used, recycled or reclaimed controlled substances) must submit to the Administrator a report containing the following information:

(i) Summaries of the records required in paragraphs (g)(1) (i) through (xvi) of this section for the previous quarter;

(ii) The total quantity imported in kilograms of each controlled substance for that quarter;

(iii) The quantity of those controlled substances imported that are used controlled substances.

(iv) The levels of import (expended consumption allowances before January 1, 1996) of controlled substances for that quarter and totaled by chemical for the control-period-to-date;

(vii) [Reserved]

(viii) The amount of controlled substances imported for use in processes resulting in their transformation or destruction;

(ix) The amount of controlled substances sold or transferred during the quarter to each person for use in processes resulting in their transformation or eventual destruction;

(x) The amount of controlled substances sold or transferred during the quarter to each person for an essential use;

(xi) [Reserved]

(xii) Internal Revenue Service Certificates showing that the purchaser or recipient of imported controlled substances intends to transform those substances or destruction verifications (as in §82.13(k)) showing that purchaser or recipient intends to destroy the controlled substances; and

(xiii) The certifications from essential-use allowance holders stating that the controlled substances were purchased solely for specified essential-uses and will not be resold or used in manufacturing; and the certifications from distributors of laboratory supplies that the controlled substances were purchased solely for eventual sale to laboratories that certify the controlled substances are for essential laboratory and analytical uses (defined at appendix G of this subpart), or if sales are made directly to laboratories, certifications from laboratories that the controlled substances will only be used for essential laboratory and analytical uses (defined at appendix G of this subpart) and will not be resold or used in manufacturing.

(xiv) In the case of laboratory essential uses, a certification from distributors of laboratory supplies that controlled substances were purchased for sale to laboratory customers who certify that the substances will only be used for laboratory applications and will not be resold or used in manufacturing; and

(xv) The amount of methyl bromide sold or transferred during the quarter to a person other than the importer solely for quarantine and preshipment applications;

(xvi) A list of the quantities of methyl bromide exported by the importer and or by other U.S. companies, to a Party to the Protocol that will be used solely for quarantine and preshipment applications and therefore were not imported expending consumption allowances; and

(xvii) For quarantine and preshipment applications of methyl bromide in the United States or by a person of another Party, one copy of a certification that the material will be used only for quarantine and preshipment applications in accordance with the definitions in this subpart from each recipient of the material and a list of additional quantities shipped to that same person for the quarter.

(xviii) For critical uses of methyl bromide, importers shall report annually the amount of critical use methyl bromide owned by the reporting entity, specifying quantities dedicated for pre-

plant use and quantities dedicated for post-harvest use, as well as quantities held by the reporting entity on behalf of another entity, specifying quantities dedicated for pre-plant use and quantities dedicated for post-harvest use along with the name of the entity on whose behalf the material is held.

(xix) Importers shall report annually the amount of methyl bromide produced or imported prior to the January 1, 2005, phaseout date owned by the reporting entity, as well as quantities held by the reporting entity on behalf of another entity, specifying the name of the entity on whose behalf the material is held.

(5) *Certification of intent to import for destruction.* For each individual shipment of a class I controlled substance imported with the intent to destroy that substance, an importer must submit electronically to the Administrator, at least 30 working days before the shipment is to leave the foreign port of export, the following information:

(i) Name, commodity code, and quantity in kilograms of each controlled substance to be imported;

(ii) Name and address of the importer, the importer ID number, and the contact person's name, email address, and phone number;

(iii) Name and address of any intermediary who will aggregate controlled substances imported for destruction, and the contact person's name, email address, and phone number;

(iv) The U.S. port of entry for the import, the expected date of shipment and the vessel transporting the material. If at the time of submitting the certification of intent to import for destruction the importer does not know the U.S. port of entry, the expected date of shipment and the vessel transporting the material, and the importer receives a non-objection notice for the individual shipment in the petition, the importer is required to notify the Administrator of this information prior to the entry of the individual shipment into the United States;

(v) Name, address, contact person, email address, and phone number of the responsible party at the destruction facility;

(vi) The export license, application for an export license, or official communication acknowledging the export from the appropriate government agency in the country of export and, if recovered in another country, the export license or official communication from the appropriate government agency in that country, and quantity authorized for export in kilograms on the export license, and an English translation of these documents; and

(vii) A certification of accuracy of the information submitted in the certification.

(6) *Destruction verification.* For each individual shipment of a class I controlled substance imported with the intent to destroy that substance, an importer must submit to the Administrator a copy of the destruction verification within 30 days after destruction of the controlled substance(s).

(7) *Review of certification of intent to import for destruction.* (i) Starting on the first working day following receipt by the Administrator of a certification of intent to import a class I controlled substance for destruction, the Administrator will initiate a review of the information submitted under paragraph (g)(5) of this section and take action within 30 working days to issue either an objection notice or a non-objection notice for the individual shipment to the person who submitted the certification of intent to import the class I controlled substance for destruction.

(ii) The Administrator may issue an objection notice if the petition lacks or appears to lack any of the information required under paragraph (g)(5) of this section or for the reasons listed in paragraphs (g)(3)(i)(B) through (F) of this section.

(iii) In cases where the Administrator does not object to the petition, the Administrator will issue a non-objection notice.

(iv) To pass the approved class I controlled substances through U.S. Customs, the non-objection notice issued by EPA must accompany the shipment through U.S. Customs.

(v) If for some reason, following EPA's issuance of a non-objection notice, new information is brought to EPA's attention which shows that the

non-objection notice was issued based on false information, then EPA has the right to:

(A) Revoke the non-objection notice;

(B) Pursue all means to ensure that the class I controlled substance is not imported into the United States; and

(C) Take appropriate enforcement actions.

(8) *Timing of import.* A person receiving the non-objection notice is permitted to import the individual shipment only within one year of the date stamped on the non-objection notice.

(9) *Additional recordkeeping requirements—importers of used, recycled, or reclaimed controlled substances.* A person receiving a non-objection notice from the Administrator for a certification of intent to import class I controlled substances for destruction must maintain the following records:

(i) A copy of the certificate of intent to import for destruction;

(ii) The EPA non-objection notice;

(iii) A copy of the export license, export license application, or official communication from the appropriate government agency in the country of export;

(iv) U.S. Customs entry documents for the import that must include one of the commodity codes from appendix K to this subpart;

(v) The date, amount, and type of controlled substance sent for destruction, per shipment;

(vi) An invoice from the destruction facility verifying the shipment was received;

(vii) A copy of the destruction verification from the destruction facility; and

(viii) An English translation of the document in paragraph (g)(9)(iii) of this section.

(10) *Recordkeeping requirements-aggregators.* A person identified in paragraph (g)(5)(iii) of this section as aggregating a controlled substance prior to destruction must:

(i) Maintain transactional records that include the name and address of the entity from whom they received the controlled substance imported for destruction;

(ii) Maintain transactional records that include the name and address of the entity to whom they sent the controlled substance imported for destruction;

(iii) Maintain records that include the date and quantity of the imported controlled substance received for destruction;

(iv) Maintain records that include the date and quantity of the imported controlled substance sent for destruction; and

(v) If the person is the final aggregator of such a controlled substance before the material is destroyed, maintain a copy of the destruction verification.

(h) *Reporting requirements—exporters.* (1) For any exports of class I controlled substances (except methyl bromide) not reported under paragraph (f)(3) of this section (reporting for producers of controlled substances), the exporter who exported a class I controlled substance (except methyl bromide) must submit to the Administrator the following information within 45 days after the end of the control period in which the unreported exports left the United States:

(i) The names and addresses of the exporter and the recipient of the exports;

(ii) The exporter's Employer Identification Number;

(iii) The type and quantity of each controlled substance exported including the quantity of controlled substance that is used, recycled, or reclaimed;

(iv) The date on which, and the port from which, the controlled substances were exported from the United States or its territories;

(v) The country to which the controlled substances were exported;

(vi) The amount exported to each Article 5 country;

(vii) The commodity code of the controlled substance shipped; and

(viii) The invoice or sales agreement containing language similar to the Internal Revenue Service Certificate that the purchaser or recipient of imported controlled substances intends to transform those substances, or destruction verifications (as in paragraph (k) of this section) showing that the purchaser or recipient intends to destroy the controlled substances.

(2) For any exports of methyl bromide not reported under paragraph (f)(3) of this section (reporting for producers of controlled substances), the exporter who exported methyl bromide must submit to the Administrator the following information within 45 days after the end of each quarter in which the unreported exports left the United States:

(i) The names and addresses of the exporter and the recipient of the exports;

(ii) The exporter's Employer Identification Number;

(iii) The quantity of methyl bromide exported by use (transformation, destruction, critical use, or quarantine and preshipment);

(iv) The date on which, and the port from which, the methyl bromide was exported from the United States or its territories;

(v) The country to which the methyl bromide was exported;

(vi) The amount exported to each Article 5 country;

(vii) The commodity code of the controlled substance shipped; and

(viii) The invoice or sales agreement containing language similar to the Internal Revenue Service Certificate that the purchaser or recipient of imported methyl bromide intends to transform those substances, the destruction verifications (as in paragraph (k) of this section) showing that the purchaser or recipient intends to destroy the controlled substances, or the certification that the purchaser or recipient and the eventual applicator will only use the material for quarantine and preshipment applications in accordance with the definitions in this subpart.

(i) [Reserved]

(j) Persons who destroy class I controlled substances shall, following promulgation of this rule, provide EPA with a one-time report stating the destruction unit's destruction efficiency and the methods used to record the volume destroyed and those used to determine destruction efficiency and the name of other relevant federal or state regulations that may apply to the destruction process. Any changes to the unit's destruction efficiency or methods used to record volume destroyed and to determine destruction efficiency must be reflected in a revision to this report to be submitted to EPA within 60 days of the change.

(k) Persons who purchase or receive and subsequently destroy controlled class I substances that were originally produced without expending allowances shall provide the producer or importer from whom they purchased or received the controlled substances with a verification that controlled substances will be used in processes that result in their destruction.

(1) The destruction verification shall include the following:

(i) Identity and address of the person intending to destroy controlled substances;

(ii) Indication of whether those controlled substances will be completely destroyed, as defined in § 82.3 of this rule, or less than completely destroyed, in which case the destruction efficiency at which such substances will be destroyed must be included;

(iii) Period of time over which the person intends to destroy controlled substances; and

(iv) Signature of the verifying person.

(2) If, at any time, any aspects of this verification change, the person must submit a revised verification reflecting such changes to the producer from whom that person purchases controlled substances intended for destruction.

(l) Persons who purchase class I controlled substances and who subsequently transform such controlled substances shall provide the producer or importer with the IRS certification that the controlled substances are to be used in processes resulting in their transformation.

(m) Any person who transforms or destroys class I controlled substances who has submitted an IRS certificate of intent to transform or a destruction verification (as under paragraph (k) of this section) to the producer or importer of the controlled substance, must report the names and quantities of class I controlled substances transformed and destroyed for each control period within 45 days of the end of such control period.

(n) Persons who import or export used controlled substances (including

recycled or reclaimed) must label their bill of lading or invoice indicating that the controlled substance is used, recycled or reclaimed.

(o) Persons who import heels of controlled substances must label their bill of lading or invoice indicating that the controlled substance in the container is a heel.

(p) Every person who brings back a container with a heel to the United States, as defined in §82.3, must report quarterly the amount brought into the United States certifying that the residual amount in each shipment is less than 10 percent of the volume of the container and will either:

(1) Remain in the container and be included in a future shipment;

(2) Be recovered and transformed;

(3) Be recovered and destroyed; or

(4) Be recovered for a non-emissive use.

(q) Every person who brings a container with a heel into the United States must report on the final disposition of each shipment within 45 days of the end of the control period.

(r) Every person who transships a controlled substance must maintain records that indicate that the controlled substance shipment originated in a foreign country destined for another foreign country, and does not enter interstate commerce with the United States.

(s) Any person allocated essential-use allowances who submits an order to a producer or importer for a controlled substance must report the quarterly quantity received from each producer or importer.

(t) Any distributor of laboratory supplies receiving controlled substances under the global laboratory essential-use exemption for sale to laboratory customers must report quarterly the quantity received of each controlled substance from each producer or importer.

(u) Holders of Essential-Use Allowances—Reporting.

(1) Within 30 days of the end of every quarter, any person allocated essential-use allowances must submit to the Administrator a report containing the quantity of each controlled substance, in kilograms, purchased and received from each producer and each importer during that quarter as well as from which country the controlled substance was imported.

(2) Any person allocated essential-use allowances must submit to the Administrator a report containing the following information within 30 days of the end of the control period, and, if possible, within 20 days of the end of the control period:

(i) The gross quantity of each controlled substance, in kilograms, that was used for the essential use during the control period; and

(ii) The quantity of each controlled substance, in kilograms, contained in exported products during the control period; and

(iii) The quantity of each controlled substance, in kilograms, that was destroyed or recycled during the control period; and

(iv) The quantity of each controlled substance, in kilograms, held in inventory as of the last day of the control period, that was acquired with essential use allowances in all control periods (*i.e.* quantity on hand at the end of the year); and

(v) The quantity of each controlled substance, in kilograms, in a stockpile that is owned by the company or is being held on behalf of the company under contract, and was produced or imported through the use of production allowances and consumption allowances prior to the phaseout (*i.e.* class I ODSs produced before their phaseout dates); and

(vi) For essential use allowances for metered-dose inhalers only, the allowance holder must report the total number of marketable units of each specific metered-dose inhaler product manufactured in the control period.

(v) *Laboratory use exemption distributors.* Any distributor of laboratory supplies who purchased controlled substances under the global essential laboratory and analytical use exemption must submit quarterly (except distributors following procedures in paragraph (x) of this section) the quantity of each controlled substance purchased by each laboratory customer or distributor whose certification was previously provided to the distributor pursuant to paragraph (w) of this section, the contact information for the source

company from which material was purchased, and the laboratories to whom the material is sold.

(w) *Laboratory use exemption customers*. A laboratory customer purchasing a controlled substance under the global essential laboratory and analytical use exemption must provide the producer, importer or distributor with a one-time-per-year certification for each controlled substance that the substance will only be used for essential laboratory and analytical uses (defined at appendix G of this subpart) and not be resold or used in manufacturing.

(1) The identity and address of the laboratory customer;

(2) The name, email address, and phone number of a contact person for the laboratory customer;

(3) The name and quantity of each controlled substance purchased, and the estimated percent of the controlled substance that will be used for each listed type of laboratory application.

(x) Any distributor of laboratory supplies who purchased class I controlled substances under the global essential laboratory and analytical use exemption, and who only sells the class I controlled substances as reference standards for calibrating laboratory analytical equipment, may write a letter to the Administrator requesting permission to submit the reports required under paragraph (v) of this section annually rather than quarterly. The Administrator will review the request and issue a notification of permission to file annual reports if, in the Administrator's judgment, the distributor meets the requirements of this paragraph. Upon receipt of a notification of extension from the Administrator, the distributor must submit annually the quantity of each controlled substance purchased by each laboratory customer whose certification was previously provided to the distributor pursuant to paragraph (w) of this section.

(y) *Quarantine and preshipment methyl bromide distributors*. Every distributor of methyl bromide who purchases or receives a quantity produced or imported for quarantine or preshipment applications under the exemptions in this subpart must comply with the following recordkeeping and reporting requirements:

(1) Every distributor of quarantine and preshipment methyl bromide must certify to the producer, importer, or distributor from whom they purchased or received the controlled substance that quantities purchased or received will be sold only for quarantine applications or preshipment applications in accordance with the definitions in this subpart.

(2) Every distributor of quarantine and preshipment methyl bromide must receive from an applicator, exporter, or distributor to whom they sell or deliver the controlled substance a certification, prior to delivery, stating that the quantity will be used or sold solely for quarantine applications or preshipment applications in accordance with definitions in this subpart.

(3) Every distributor of quarantine and preshipment methyl bromide must maintain the certifications as records for 3 years.

(4) Every distributor of quarantine and preshipment methyl bromide must report to the Administrator within 45 days after the end of each quarter, the total quantity delivered to applicators or end users for quarantine applications and preshipment applications in accordance with definitions in this subpart.

(z) *Quarantine and preshipment methyl bromide applicators*. Every applicator of methyl bromide who purchases or receives a quantity produced or imported solely for quarantine or preshipment applications under the exemptions in this subpart must comply with the following recordkeeping and reporting requirements:

(1) *Recordkeeping*. Every applicator of methyl bromide produced or imported for quarantine and preshipment applications under the exemptions of this subpart must maintain, for every application, a document from the commodity owner, shipper, or their agent requesting the use of methyl bromide citing the requirement that justifies its use in accordance with definitions in this subpart. These documents shall be retained for 3 years.

(2) *Reporting*. Every applicator who purchases or receives methyl bromide that was produced or imported for

quarantine and preshipment applications under the exemptions in this subpart shall provide the distributor of the methyl bromide, prior to shipment, with a certification that the methyl bromide will be used only for quarantine applications or preshipment applications as defined in this subpart.

(aa) *Quarantine and preshipment methyl bromide end user certification.* Every commodity owner, shipper or their agent requesting an applicator to use methyl bromide that was produced or imported solely for quarantine and preshipment applications under the exemptions of this subpart must maintain a record for 3 years, for each request, certifying knowledge of the requirements associated with the exemption for quarantine and preshipment applications in this subpart and citing the requirement that justifies its use. The record must include the following statement: ''I certify knowledge of the requirements associated with the exempted quarantine and preshipment applications published in 40 CFR part 82, including the requirement that this letter cite the treatments or official controls for quarantine applications or the official requirements for preshipment requirements.''

(bb) Every distributor of methyl bromide (class I, Group VI controlled substances) who purchases or receives a quantity of critical use methyl bromide must comply with recordkeeping and reporting requirements specified in this paragraph (bb).

(1) Recordkeeping—Every distributor of critical use methyl bromide must certify to the producer or importer or other entity from which they are acquiring quantities of critical use methyl bromide that such quantities received will be sold or used only for approved critical use(s) in accordance with the definitions and prohibitions in this subpart.

(i) Every distributor of a quantity of critical use methyl bromide must receive from an applicator, or any other entity to whom they sell critical use methyl bromide, a certification of the quantity of critical use methyl bromide ordered, prior to delivery of the quantity, stating that the quantity will be sold or used only for approved critical uses in accordance with definitions and prohibitions in this subpart.

(ii) Every distributor of methyl bromide who receives a certification from an applicator or any other entity to which they sell critical use methyl bromide must maintain the certifications as records for 3 years.

(iii) Every distributor of a quantity of critical use methyl bromide must maintain invoice and order records related to the sale of such material for 3 years.

(2) Reporting—Every distributor of critical use methyl bromide must report to the Administrator annually, the following items:

(i) For critical uses of class I, Group VI controlled substances, an annual list of the amount of critical use methyl bromide bought;

(ii) For critical uses of class I, Group VI controlled substances, an annual list of the amount of critical use methyl bromide sold for each specified critical use in Appendix L of this subpart;

(iii) For critical uses of class I, Group VI controlled substances, report the amount of critical use methyl bromide owned by the reporting entity, specifying quantities dedicated for pre-plant use and quantities dedicated for post-harvest use, as well as quantities held by the reporting entity on behalf of another entity, specifying quantities dedicated for pre-plant use and quantities dedicated for post-harvest use, along with the name of the entity on whose behalf the material is held;

(iv) [Reserved]

(v) The amount of methyl bromide produced or imported prior to the January 1, 2005, phaseout date owned by the reporting entity, as well as quantities held by the reporting entity on behalf of another entity, specifying the name of the entity on whose behalf the material is held.

(cc) Every third party applicator of methyl bromide (class I, Group VI controlled substances) that purchases or receives critical use methyl bromide must comply with recordkeeping and reporting requirements specified in this paragraph (cc).

(1) Recordkeeping—Every third party applicator of critical use methyl bromide must certify to the producer or importer or other entity from which

they are acquiring quantities of critical use methyl bromide that such quantities received will be sold or used only for approved critical use(s) in accordance with the definitions and prohibitions in this subpart.

(i) Every third party applicator of a quantity of critical use methyl bromide must receive from any entity to whom they sell critical use methyl bromide, a certification of the quantity of critical use methyl bromide ordered, prior to delivery of the quantity, stating that the quantity will be sold or used only for approved critical uses in accordance with definitions and prohibitions in this subpart.

(ii) Every third party applicator of methyl bromide who receives a certification from an entity to which they sell critical use methyl bromide must maintain the certifications as records for 3 years.

(iii) Every third party applicator of a quantity of critical use methyl bromide must maintain invoice and order records related to the sale of such material for 3 years.

(2) Reporting—Every third party applicator of critical use methyl bromide must report to the Administrator annually, the following items:

(i) For critical uses of class I, Group VI controlled substances, an annual list of the amount of critical use methyl bromide bought;

(ii) For critical uses of class I, Group VI controlled substances, an annual list of the amount of critical use methyl bromide sold for each specified critical use in Appendix L of this subpart;

(iii) For critical uses of class I, Group VI controlled substances, report annually the amount of critical use methyl bromide owned by the reporting entity, specifying quantities dedicated for pre-plant use and quantities dedicated for post-harvest use, as well as quantities held by the reporting entity on behalf of another entity, specifying quantities dedicated for pre-plant use and quantities dedicated for post-harvest use, along with the name of the entity on whose behalf the material is held;

(iv) [Reserved]

(v) The amount of methyl bromide produced or imported prior to the January 1, 2005 phaseout date owned by the reporting entity, as well as quantities held by the reporting entity on behalf of another entity, specifying the name of the entity on whose behalf the material is held.

(dd) Every approved critical user purchasing an amount of critical use methyl bromide or purchasing fumigation services with critical use methyl bromide must, for each request, identify the use as a critical use and certify being an approved critical user. The approved critical user certification will state, in part: ''I certify, under penalty of law, I am an approved critical user and I will use this quantity of methyl bromide for an approved critical use. My action conforms to the requirements associated with the critical use exemption published in 40 CFR part 82. I am aware that any agricultural commodity within a treatment chamber, facility or field I fumigate with critical use methyl bromide cannot subsequently or concurrently be fumigated with non-critical use methyl bromide during the same control period, excepting a QPS treatment or a treatment for a different use (*e.g.*, a different crop or commodity). I will not use this quantity of methyl bromide for a treatment chamber, facility, or field that I previously fumigated with non-critical use methyl bromide during the same control period, excepting a QPS treatment or a treatment for a different use (*e.g.*, a different crop or commodity), unless a local township limit now prevents me from using methyl bromide alternatives or I have now become an approved critical user as a result of rulemaking.'' The certification will also identify the type of critical use methyl bromide purchased, the location of the treatment, the crop or commodity treated, the quantity of critical use methyl bromide purchased, and the acreage/square footage treated, and will be signed and dated by the approved critical user.

[60 FR 24986, May 10, 1995]

EDITORIAL NOTE: For FEDERAL REGISTER citations affecting § 82.13, see the List of CFR Sections Affected, which appears in the Finding Aids section of the printed volume and at *www.govinfo.gov*.

§ 82.14 Process for electronic reporting.

(a) Starting May 18, 2020, reports and petitions that are available to be submitted through the Central Data Exchange, as well as any related supporting documents, must be submitted through that tool.

(b) Entities can register and access the Central Data Exchange as follows:

(1) Go to EPA's Central Data Exchange website at *https://cdx.epa.gov* and follow the links for the submission of ozone-depleting substances.

(2) Call EPA's Central Data Exchange Help Desk at 1–888–890–1995.

(3) Email the EPA's Central Data Exchange Help Desk at *HelpDesk@epacdx.net*.

[85 FR 15296, Mar. 17, 2020]

§ 82.15 Prohibitions for class II controlled substances.

(a) *Production*. (1) Effective January 21, 2003, no person may produce class II controlled substances for which EPA has apportioned baseline production and consumption allowances, in excess of the quantity of unexpended production allowances, unexpended Article 5 allowances, unexpended export production allowances, or conferred unexpended HCFC–141b exemption allowances held by that person for that substance under the authority of this subpart at that time in that control period, unless the substances are transformed or destroyed domestically or by a person of another Party, or unless they are produced using an exemption granted in paragraph (f) of this section. Every kilogram of excess production constitutes a separate violation of this subpart.

(2) Effective January 21, 2003, no person may use production allowances to produce a quantity of class II controlled substance unless that person holds under the authority of this subpart at the same time consumption allowances sufficient to cover that quantity of class II controlled substances. No person may use consumption allowances to produce a quantity of class II controlled substances unless the person holds under authority of this subpart at the same time production allowances sufficient to cover that quantity of class II controlled substances.

(b) *Import*. (1) Effective January 21, 2003, no person may import class II controlled substances (other than transhipments, heels or used class II controlled substances) for which EPA has apportioned baseline production and consumption allowances , in excess of the quantity of unexpended consumption allowances, or conferred unexpended HCFC–141b exemption allowances held by that person under the authority of this subpart at that time in that control period, unless the substances are for use in a process resulting in their transformation or their destruction, or unless they are produced using an exemption granted in paragraph (f) of this section. Every kilogram of excess import constitutes a separate violation of this subpart.

(2) Effective January 21, 2003, no person may import, at any time in any control period, a used class II controlled substance for which EPA has apportioned baseline production and consumption allowances, without having submitted a petition to the Administrator and received a non-objection notice in accordance with § 82.24(c)(3) and (4). A person issued a non-objection notice for the import of an individual shipment of used class II controlled substances may not transfer or confer the right to import, and may not import any more than the exact quantity (in kilograms) of the used class II controlled substance stated in the non-objection notice. Every kilogram of import of used class II controlled substance in excess of the quantity stated in the non-objection notice issued by the Administrator in accordance with § 82.24(c)(3) and (4) constitutes a separate violation of this subpart.

(3) No person may import for purposes of destruction, at any time in any control period, a class II controlled substance for which EPA has apportioned baseline production and consumption allowances, without having submitted a certification of intent to import for destruction to the Administrator and received a non-objection notice in accordance with § 82.24(c)(6). A person issued a non-objection notice for the import of an individual shipment of class II controlled substances

for destruction may not transfer or confer the right to import and may not import any more than the exact quantity (in kilograms) of the class II controlled substance stated in the non-objection notice. For imports intended to be destroyed in the United States, a person issued a non-objection notice must destroy the controlled substance within one year of the date stamped on the non-objection letter, may not transfer or confer the right to import, and may not import any more than the exact quantity (in kilograms) of the class II controlled substance stated in the non-objection notice. Every kilogram of import of class II controlled substance in excess of the quantity stated in the non-objection notice issued by the Administrator in accordance with § 82.24(c)(6) constitutes a separate violation of this subpart.

(c) *Production with Article 5 allowances.* No person may introduce into U.S. interstate commerce any class II controlled substance produced with Article 5 allowances, except for export to an Article 5 Party as listed in Appendix E of this subpart. Every kilogram of a class II controlled substance produced with Article 5 allowances that is introduced into interstate commerce other than for export to an Article 5 Party constitutes a separate violation under this subpart. No person may export any class II controlled substance produced with Article 5 allowances to a non-Article 5 Party. Every kilogram of a class II controlled substance that was produced with Article 5 allowances that is exported to a non-Article 5 Party constitutes a separate violation under this subpart.

(d) *Production with export production allowances.* No person may introduce into U.S. interstate commerce any class II controlled substance produced with export production allowances. Every kilogram of a class II controlled substance that was produced with export production allowances that is introduced into U.S. interstate commerce constitutes a separate violation under this subpart.

(e) Trade with Parties. No person may import or export any quantity of a class II controlled substance listed in Appendix A to this subpart, from or to any foreign state that is not either:

(1) A Party to the Beijing Amendment. As of March 14, 2014, the following foreign states had not ratified the Beijing Amendment: Kazakhstan, Libya, and Mauritania. For updates on ratification status, see the Ozone Secretariat's Web site at: *http://ozone.unep.org/new_site/en/treaty_ratification_status.php*. Or,

(2) A foreign state not party to the Beijing Amendment that is complying with the Beijing Amendment as defined in this subpart.

(f) *Exemptions.* (1) Medical Devices [Reserved]

(g) *Introduction into interstate commerce or use.* (1) Effective January 1, 2010, no person may introduce into interstate commerce or use HCFC–141b (unless used, recovered, and recycled) for any purpose except for use in a process resulting in its transformation or its destruction; for export to Article 5 Parties under § 82.18(a); for HCFC–141b exemption needs; as a transhipment or heel; or for exemptions permitted in paragraph (f) of this section.

(2)(i) Effective January 1, 2010, no person may introduce into interstate commerce or use HCFC–22 or HCFC–142b (unless used, recovered, and recycled) for any purpose other than for use in a process resulting in its transformation or its destruction; for use as a refrigerant in equipment manufactured before January 1, 2010; for export to Article 5 Parties under § 82.18(a); as a transhipment or heel; or for exemptions permitted in paragraph (f) of this section.

(ii) Introduction into interstate commerce and use of HCFC–22 is not subject to the prohibitions in paragraph (g)(2)(i) of this section if the HCFC–22 is for use in medical equipment prior to January 1, 2015; for use in thermostatic expansion valves prior to January 1, 2015; or for use as a refrigerant in appliances manufactured before January 1, 2012, provided that the components are manufactured prior to January 1, 2010, and are specified in a building permit or a contract dated before January 1, 2010, for use on a particular project.

(3) Effective January 1, 2015, no person may introduce into interstate commerce or use HCFC–141b (unless used,

recovered, and recycled) for any purpose other than for use in a process resulting in its transformation or its destruction; for export to Article 5 Parties under §82.18(a), as a transhipment or heel; or for exemptions permitted in paragraph (f) of this section.

(4)(i) Effective January 1, 2015, no person may introduce into interstate commerce or use any class II controlled substance not governed by paragraphs (g)(1) through (3) of this section (unless used, recovered and recycled) for any purpose other than for use in a process resulting in its transformation or its destruction; for use as a refrigerant in equipment manufactured before January 1, 2020; for use as a fire suppression streaming agent listed as acceptable for use or acceptable subject to narrowed use limits for nonresidential applications in accordance with the regulations at subpart G of this part; for export to Article 5 Parties under §82.18(a); as a transhipment or heel; for exemptions permitted under paragraph (f) of this section; or for exemptions permitted under paragraph (g)(4)(ii) or (iii) of this section.

(ii) Effective January 1, 2015, use of HCFC–225ca or HCFC–225cb as a solvent (excluding use in manufacturing a product containing HCFC–225ca or HCFC–225cb) is not subject to the use prohibition in paragraph (g)(4)(i) of this section if the person using the HCFC–225ca or HCFC–225cb placed the controlled substance into inventory before January 1, 2015. This paragraph does not create an exemption to the prohibition on introduction into interstate commerce in paragraph (g)(4)(i) of this section.

(iii) Effective January 1, 2015, use of HCFC–124 as a sterilant for the manufacture and testing of biological indicators is not subject to the use prohibition in paragraph (g)(4)(i) of this section if the person using the HCFC–124 placed the controlled substance into inventory before January 1, 2015. This paragraph does not create an exemption to the prohibition on introduction into interstate commerce in paragraph (g)(4)(i) of this section.

(5)(i) Effective January 1, 2020, no person may introduce into interstate commerce or use HCFC–123 or HCFC–124 (unless used, recovered and recycled) for any purpose other than for use in a process resulting in its transformation or its destruction; for use as a refrigerant in equipment manufactured before January 1, 2020; for use as a fire suppression streaming agent listed as acceptable for use or acceptable subject to narrowed use limits for nonresidential applications in accordance with the regulations at subpart G of this part and only to the extent permitted under paragraph (g)(5)(ii) of this section; for export to Article 5 Parties under §82.18(a); as a transhipment or heel; or for exemptions permitted under paragraph (f) of this section.

(ii) HCFC–123 that was produced or imported on or after January 1, 2020 may be used as a fire suppression streaming agent only to service equipment manufactured before January 1, 2020. HCFC–123 that was produced or imported prior to January 1, 2020 (or used, recovered and recycled) may be used as a fire suppression streaming agent in equipment manufactured before, on, or after January 1, 2020.

(iii) Notwithstanding the prohibition on use in paragraph (g)(5)(i) of this section, the use of HCFC–123 as a refrigerant in equipment manufactured on or after January 1, 2020 but before January 1, 2021 is permitted if the conditions of this paragraph (g)(5)(iii) are met. The HCFC–123 must be in the possession of an entity that will complete the manufacture of the appliance and imported prior to January 1, 2020. The appliance components must be ready for shipment to a construction location prior to July 24, 2019 and be specified in a building permit or a contract dated before July 24, 2019 for use on a particular project. All HCFC–123 used to service such appliances on or after January 1, 2021 must be used, recovered, or recycled.

(6) Effective January 1, 2030, no person may introduce into interstate commerce or use any class II controlled substance (unless used, recovered, and recycled) for any purpose other than for use in a process resulting in its transformation or its destruction; for export to Article 5 Parties under §82.18(a); as a transhipment or heel; or for exemptions permitted in paragraph (f) of this section.

(7) Effective January 1, 2040, no person may introduce into interstate commerce or use any class II controlled substance (unless used, recovered, and recycled) for any purpose other than for use in a process resulting in its transformation or its destruction, as a transhipment or heel, or for exemptions permitted in paragraph (f) of this section.

(8) No person may sell or distribute, or offer for sale or distribution, any class II substance that they know, or have reason to know, was imported in violation of this section, except for such actions needed to re-export the controlled substance. Every kilogram of a controlled substance imported in contravention of this paragraph (g)(8) that is sold or distributed, or offered for sale or distribution, constitutes a separate violation of this subpart.

[68 FR 2848, Jan. 21, 2003, as amended at 69 FR 34031, June 17, 2004; 71 FR 41171, July 20, 2006; 74 FR 66445, Dec. 15, 2009; 79 FR 16686, Mar. 26, 2014; 79 FR 64286, Oct. 28, 2014; 85 FR 15296, Mar. 17, 2020; 85 FR 15296, Mar. 17, 2020]

§ 82.16 Phaseout schedule of class II controlled substances.

(a)(1) *Calendar-year allowances.* In each control period as indicated in the following tables, each person is granted the specified percentage of baseline production allowances and baseline consumption allowances for the specified class II controlled substances apportioned under §§ 82.17 and 82.19:

TABLE 1 TO PARAGRAPH (a)—CALENDAR-YEAR HCFC PRODUCTION ALLOWANCES

Control period	Percent of HCFC–141b	Percent of HCFC–22	Percent of HCFC–142b	Percent of HCFC–123	Percent of HCFC–124	Percent of HCFC–225ca	Percent of HCFC–225cb
2003	0	100	100	.....	.....		
2004	0	100	100	.....	.....		
2005	0	100	100	.....	.....		
2006	0	100	100	.....	.....		
2007	0	100	100	.....	.....		
2008	0	100	100	.....	.....		
2009	0	100	100	.....	.....		
2010	0	41.9	0.47	0	125	125	125
2011	0	32	4.9	0	125	125	125
2012	0	17.7	4.9	0	125	125	125
2013	0	30.1	4.9	0	125	125	125
2014	0	26.1	4.9	0	125	125	125
2015	0	21.7	0.37	0	5	0	0
2016	0	21.7	0.32	0	5	0	0
2017	0	21.7	0.26	0	5	0	0
2018	0	21.7	0.21	0	5	0	0
2019	0	21.7	0.16	0	5	0	0
2020	0	0	0	0	5.0	0	0
2021	0	0	0	0	5.0	0	0
2022	0	0	0	0	5.0	0	0
2023	0	0	0	0	4.4	0	0
2024	0	0	0	0	3.8	0	0
2025	0	0	0	0	3.2	0	0
2026	0	0	0	0	2.5	0	0
2027	0	0	0	0	1.9	0	0
2028	0	0	0	0	1.3	0	0
2029	0	0	0	0	0.7	0	0
2030	0	0	0	0	0	0	0

TABLE 2 TO PARAGRAPH (a)—CALENDAR-YEAR HCFC CONSUMPTION ALLOWANCES

Control period	Percent of HCFC–141b	Percent of HCFC–22	Percent of HCFC–142b	Percent of HCFC–123	Percent of HCFC–124	Percent of HCFC–225ca	Percent of HCFC–225cb
2003	0	100	100	.....	.....		
2004	0	100	100	.....	.....		
2005	0	100	100	.....	.....		
2006	0	100	100	.....	.....		
2007	0	100	100	.....	.....		
2008	0	100	100	.....	.....		
2009	0	100	100	.....	.....		
2010	0	41.9	0.47	125	125	125	125
2011	0	32	4.9	125	125	125	125
2012	0	17.7	4.9	125	125	125	125
2013	0	18	4.9	125	125	125	125

TABLE 2 TO PARAGRAPH (a)—CALENDAR-YEAR HCFC CONSUMPTION ALLOWANCES—Continued

Control period	Percent of HCFC–141b	Percent of HCFC–22	Percent of HCFC–142b	Percent of HCFC–123	Percent of HCFC–124	Percent of HCFC–225ca	Percent of HCFC–225cb
2014	0	14.2	4.9	125	125	125	125
2015	0	7	1.7	100	8.3	0	0
2016	0	5.6	1.5	100	8.3	0	0
2017	0	4.2	1.2	100	8.3	0	0
2018	0	2.8	1	100	8.3	0	0
2019	0	1.4	0.7	100	8.3	0	0
2020	0	0	0	32.3	8.3	0	0
2021	0	0	0	32.3	8.3	0	0
2022	0	0	0	32.3	8.3	0	0
2023	0	0	0	28.4	7.3	0	0
2024	0	0	0	24.4	6.3	0	0
2025	0	0	0	20.4	5.3	0	0
2026	0	0	0	16.4	4.2	0	0
2027	0	0	0	12.5	3.2	0	0
2028	0	0	0	8.5	2.2	0	0
2029	0	0	0	4.5	1.1	0	0
2030	0	0	0	0	0	0	0

(2) *Recoupment allowances.* In the control period beginning January 1, 2013 and ending December 31, 2013, and again in the control period beginning January 1, 2014 and ending December 31, 2014, certain companies are granted HCFC consumption and production allowances in addition to the percentage of baseline listed in the table at paragraph (a)(1) of this section. The following companies will receive the amounts listed below in both 2013 and 2014: 2,374,846 kg of HCFC–22 consumption allowances and 2,305,924 kg of HCFC–22 production allowances to Arkema; 1,170 kg of HCFC–142b consumption allowances to DuPont; 29,146 kg of HCFC–142b consumption allowances and 53,549 kg of HCFC–142b production allowances to Honeywell; 578,948 kg of HCFC–22 consumption allowances to Solvay Fluorides; and 144,900 kg of HCFC–142b production allowances to Solvay Solexis.

(b) Effective January 1, 2003, no person may produce HCFC-141b except for use in a process resulting in its transformation or its destruction, for export under § 82.18(a) using unexpended Article 5 allowances, for export under § 82.18(b) using unexpended export production allowances, for HCFC-141b exemption needs using unexpended HCFC-141b exemption allowances, or for exemptions permitted in § 82.15(f). Effective January 1, 2003, no person may import HCFC-141b (other than transhipments, heels or used class II controlled substances) in excess of the quantity of unexpended HCFC-141b exemption allowances held by that person except for use in a process resulting in its transformation or its destruction, or for exemptions permitted in § 82.15(f).

(c) Effective January 1, 2010, no person may produce HCFC-22 or HCFC-142b for any purpose other than for use in a process resulting in their transformation or their destruction, for use in equipment manufactured before January 1, 2010, for export under § 82.18(a) using unexpended Article 5 allowances, or for export under § 82.18(b) using unexpended export production allowances, or for exemptions permitted in § 82.15(f). Effective January 1, 2010, no person may import HCFC-22 or HCFC-142b (other than transhipments, heels or used class II controlled substances) for any purpose other than for use in a process resulting in their transformation or their destruction, for exemptions permitted in § 82.15(f), or for use in equipment manufactured prior to January 1, 2010.

(d) Effective January 1, 2015, no person may produce class II controlled substances not previously controlled for any purpose other than for use in a process resulting in their transformation or their destruction, for use as a refrigerant in equipment manufactured before January 1, 2020, for use as a fire suppression streaming agent listed as acceptable for use or acceptable subject to narrowed use limits for nonresidential applications in accordance with the regulations at subpart G of this part, for export under § 82.18(a) using unexpended Article 5 allowances, for export under § 82.18(b) using unexpended export production allowances, or for exemptions permitted in § 82.15(f). Effective January 1, 2015, no person may import class II controlled substances not subject to the requirements of paragraph (b) or (c) of this section (other than transhipments, heels, or used class II controlled substances) for any purpose other than for use in a process resulting in their transformation or their destruction, for exemptions permitted in § 82.15(f), for use as a refrigerant in equipment manufactured prior to January 1, 2020, or for use as a fire suppression streaming agent listed as acceptable for use or acceptable subject to narrowed use limits for nonresidential applications in accordance with the regulations at subpart G of this part.

(e)(1) Effective January 1, 2020, no person may produce HCFC–22 or HCFC–142b for any purpose other than for use in a process resulting in their transformation or their destruction, for export under § 82.18(a) using unexpended Article 5 allowances, or for exemptions permitted in § 82.15(f). Effective January 1, 2020, no person may import HCFC–22 or HCFC–142b for any purpose other than for use in a process resulting in their transformation or their destruction or for exemptions permitted in § 82.15(f).

(2) Effective January 1, 2020, no person may produce HCFC–123 for any purpose other than for use in a process resulting in its transformation or its destruction, for use as a refrigerant in equipment manufactured before January 1, 2020, for export under § 82.18(a) using unexpended Article 5 allowances, or for exemptions permitted in § 82.15(f). Effective January 1, 2020, no person may import HCFC–123 for any purpose other than for use in a process resulting in its transformation or its destruction, for use as a refrigerant in equipment manufactured before January 1, 2020, for use as a fire suppression streaming agent in equipment manufactured before January 1, 2020 and listed as acceptable for use or acceptable subject to narrowed use limits for nonresidential applications, or for exemptions permitted in § 82.15(f).

(f) Effective January 1, 2030, no person may produce class II controlled substances, for any purpose other than for use in a process resulting in their transformation or their destruction, for export under § 82.18(a) using unexpended Article 5 allowances, or for exemptions permitted in § 82.15(f). Effective January 1, 2030, no person may import class II controlled substances for any purpose other than for use in a process resulting in their transformation or their destruction, or for exemptions permitted in § 82.15(f).

(g) Effective January 1, 2040, no person may produce class II controlled substances for any purpose other than for use in a process resulting in their transformation or their destruction, or for exemptions permitted in § 82.15(f).

(h) [Reserved]

[68 FR 2848, Jan. 21, 2003, as amended at 71 FR 41171, July 20, 2006; 74 FR 66446, Dec. 15, 2009; 76 FR 47467, Aug. 5, 2011; 78 FR 20027, Apr. 3, 2013; 79 FR 64286, Oct. 28, 2014; 85 FR 15296, Mar. 17, 2020]

§ 82.17 Apportionment of baseline production allowances for class II controlled substances.

The following persons are apportioned baseline production allowances for HCFC–22, HCFC–141b, HCFC–142b, HCFC–123, HCFC–124, HCFC–225ca, and HCFC–225cb as set forth in the following table:

Person	Controlled substance	Allowances (kg)
AGC Chemicals Americas	HCFC–225ca	266,608
	HCFC–225cb	373,952
Arkema	HCFC–22	46,692,336
	HCFC–141b	24,647,925
	HCFC–142b	484,369
DuPont	HCFC–22	42,638,049
	HCFC–124	2,269,210
Honeywell	HCFC–22	37,378,252
	HCFC–141b	28,705,200
	HCFC–142b	2,417,534
	HCFC–124	1,759,681
MDA Manufacturing	HCFC–22	2,383,835
Solvay Specialty Polymers USA, LLC	HCFC–142b	6,541,764

[79 FR 64287, Oct. 28, 2014]

§ 82.18 Availability of production in addition to baseline production allowances for class II controlled substances.

(a) *Article 5 allowances.* (1) Effective January 1, 2003, a person apportioned baseline production allowances for HCFC–141b, HCFC–22, or HCFC–142b under § 82.17 is also apportioned Article 5 allowances, equal to 15 percent of their baseline production allowances, for the specified HCFC for each control period up until December 31, 2009, to be used for the production of the specified HCFC for export only to foreign states listed in Appendix E to this subpart.

(2) Effective January 1, 2010, a person apportioned baseline production allowances under § 82.17 for HCFC–141b, HCFC–22, or HCFC–142b is also apportioned Article 5 allowances, equal to 10 percent of their baseline production allowances, for the specified HCFC for each control period up until December

31, 2019, to be used for the production of the specified HCFC for export only to foreign states listed in Appendix E to this subpart.

(3) Effective January 1, 2015, a person apportioned baseline production allowances under § 82.17 for HCFC–123, HCFC–124, HCFC–225ca, and HCFC–225cb is also apportioned Article 5 allowances, equal to 10 percent of their baseline production allowances, for the specified HCFC for each control period up until December 31, 2019, to be used for the production of the specified HCFC for export only to foreign states listed in Appendix E to this subpart.

(b) *Export Production Allowances.* (1) Effective January 1, 2003, a person apportioned baseline production allowances for HCFC–141b under § 82.17 is also apportioned export production allowances, equal to 100 percent of their baseline production allowances, for HCFC–141b for each control period up until December 31, 2009, to be used for the production of HCFC–141b for export only, in accordance with this section.

(2) [Reserved]

(c) *International trades of production allowances, export production allowances and Article 5 allowances.* (1) A person may increase or decrease their production allowances, export production allowances, or Article 5 allowances, for a specified control period through trades with a foreign state that is Party to the Beijing Amendment or is complying with the Beijing Amendment as defined in this subpart. The foreign state must agree either to trade to the person for the current control period some quantity of production that the foreign state is permitted under the Montreal Protocol or to receive from the person for the current control period some quantity of production that the person is permitted under this subpart. The person must expend their consumption allowances allocated under § 82.19, or obtained under § 82.20 in order to produce with the additional production allowances.

(2) *Trade from a Party—Information requirements.* (i) A person requesting a trade from a Party must submit to the Administrator a signed document from the principal diplomatic representative in that nation's embassy in the U.S. stating that the appropriate authority within that nation will establish or revise production limits for the nation to equal the lowest of the following three production quantities:

(A) The maximum production that the nation is allowed under the Protocol minus the quantity (in kilograms) to be traded;

(B) The maximum production that is allowed under the nation's applicable domestic law minus the quantity (in kilograms) to be traded; or

(C) The average of the nation's actual national production level for the three years prior to the trade minus the production to be traded.

(ii) A person requesting a trade from a Party must also submit to the Administrator a true copy of the document that sets forth the following:

(A) The identity and address of the person;

(B) The identity of the Party;

(C) The names and telephone numbers of contact persons for the person and for the Party;

(D) The chemical type and quantity (in kilograms) of production being traded;

(E) Documentation that the Party possesses the necessary quantity of unexpended production rights;

(F) The control period(s) to which the trade applies; and

(G) For increased production intended for export to the Party from whom the allowances would be received, a signed statement of intent to export to the Party.

(3) *Trade to a Party—Information requirements.* A person requesting a trade to a Party must submit a request that sets forth the following information to the Administrator:

(i) The identity and address of the person;

(ii) The identity of the Party;

(iii) The names and telephone numbers of contact persons for the person and for the Party;

(iv) The chemical type and quantity (in kilograms) of allowable production being traded; and

(v) The control period(s) to which the trade applies.

(4) *Review of international trade request to a Party.* After receiving a trade request that meets the requirements of

paragraph (c)(3) of this section, the Administrator may, at his/her discretion, consider the following factors by seeking concurrence from the Department of Commerce, the United States Trade Representative, and the Department of State, where appropriate, in deciding whether to approve such a trade:

(i) Possible creation of domestic economic hardship;

(ii) Possible effects on trade;

(iii) Potential environmental implications; and

(iv) The total quantity of unexpended production allowances held by U.S. entities.

(5) *Notice of trade.* If the request meets the requirement of paragraph (c)(2) of this section for trades from Parties and paragraphs (c)(3) and (4) of this section for trades to Parties, the Administrator will issue the person a notice. The notice will either grant or deduct production allowances or export production allowances or Article 5 allowances and specify the control period to which the trade applies. The Administrator may disapprove the trade request contingent on the consideration of factors listed in paragraph (c)(4) of this section for trades to Parties.

(i) For trades from a Party, the Administrator will issue a notice revising the allowances held by the recipient of the trade to equal the unexpended production allowances, unexpended export production allowances, or unexpended Article 5 allowances held by the recipient of the trade under this subpart plus the quantity of allowable production traded from the Party.

(ii) For trades to a Party, the Administrator will issue a notice revising the production limit for the trader to equal the lesser of:

(A) The unexpended production allowances, unexpended export production allowances or unexpended Article 5 allowances held by the trade or minus the quantity traded; or

(B) The unexpended production allowances held by the trader minus the amount by which the U.S. average annual production of the class II controlled substance being traded for the three years prior to the trade is less than the total allowable production of that class II controlled substance under this subpart minus the amount traded; or

(C) The total U.S. allowable production of the class II controlled substance being traded minus the three-year average of the actual annual U.S. production of the class II controlled substance prior to the control period of the trade.

(6) Revised notices of production limits for subsequent traders. If after one person obtains approval of a trade of allowable production of a class II controlled substance to a Party and other persons obtain approval for trades of the same class II controlled substance during the same control period, the Administrator will issue revised notices. The notices will revise the production limits for each of the other persons trading to equal the lesser of:

(i) The unexpended production allowances, unexpended export production allowances or unexpended Article 5 allowances held by the trader under this subpart minus the quantity traded; or

(ii) The result of the following set of calculations:

(A) The total U.S. allowable production of the class II controlled substance minus the three-year average of the actual annual U.S. production of the class II controlled substance prior to the control period of the trade;

(B) The quantity traded divided by the total quantity traded by all the other persons trading the same class II controlled substance in the same control period;

(C) The result of paragraph (c)(6)(ii)(A) of this section multiplied by the result of paragraph (c)(6)(ii)(B) of this section;

(D) The quantity derived in paragraph (c)(6)(i) of this section, minus the result of paragraph (c)(6)(ii)(C) of this section;

(7) Production limit for previous traders. The Administrator will also issue a notice revising the production limit for each trader who previously obtained approval of a trade of the class II controlled substance to a Party in the same control period to equal the result of the following set of calculations:

(i) The total U.S. allowable production of the class II controlled substance minus the three-year average of the actual annual U.S. production of the

class II controlled substance prior to the control period of the trade;

(ii) The quantity traded by the person divided by the quantity traded by all the persons who have traded that class II controlled substance in that control period;

(iii) The result of paragraph (c)(7)(i) of this section multiplied by the result of paragraph (c)(7)(ii) of this section.

(iv) The unexpended production allowances, unexpended export production allowances or unexpended Article 5 allowances held by the person plus the result of paragraph (c)(7)(iii) of this section;

(8) Effective date of revised production limits. The change in production allowances, export production allowances or Article 5 allowances will be effective on the date that the notice is issued.

[68 FR 2848, Jan. 21, 2003, as amended at 74 FR 66446, Dec. 15, 2009; 79 FR 16687, Mar. 26, 2014]

§ 82.19 Apportionment of baseline consumption allowances for class II controlled substances.

The following persons are apportioned baseline consumption allowances for HCFC–22, HCFC–142b, HCFC–123, HCFC–124, HCFC–225ca, and HCFC–225cb as set forth in the following table:

Person	Controlled substance	Allowances (kg)
ABCO Refrigeration Supply	HCFC–22	279,366
AGC Chemicals Americas	HCFC–225ca	285,328
	HCFC–225cb	286,832
Altair Partners	HCFC–22	302,011
Arkema	HCFC–22	48,637,642
	HCFC–141b	25,405,570
	HCFC–142b	483,827
	HCFC–124	3,719
Carrier	HCFC–22	54,088
Continental Industrial Group	HCFC–141b	20,315
Coolgas, Inc.	HCFC–141b	16,097,869
Combs Investment Property	HCFC–22	1,040,458
	HCFC–123	19,980
	HCFC–124	3,742
Discount Refrigerants	HCFC–141b	994
DuPont	HCFC–22	38,814,862
	HCFC–141b	9,049
	HCFC–142b	52,797
	HCFC–123	1,877,042
	HCFC–124	743,312
H.G. Refrigeration Supply	HCFC–22	40,068
Honeywell	HCFC–22	35,392,492
	HCFC–141b	20,749,489
	HCFC–142b	1,315,819
	HCFC–124	1,284,265
ICC Chemical Corp.	HCFC–141b	81,225
ICOR	HCFC–124	81,220
Mexichem Fluor Inc.	HCFC–22	2,546,305
Kivlan & Company	HCFC–22	2,081,018
MDA Manufacturing	HCFC–22	2,541,545
Mondy Global	HCFC–22	281,824
National Refrigerants	HCFC–22	5,528,316
	HCFC–123	72,600
	HCFC–124	50,380
Perfect Technology Center, LP	HCFC–123	9,100
Refricenter of Miami	HCFC–22	381,293
Refricentro	HCFC–22	45,979
R-Lines	HCFC–22	63,172
Saez Distributors	HCFC–22	37,936
Solvay Fluorides, LLC	HCFC–22	3,781,691
	HCFC–141b	3,940,115
Solvay Specialty Polymers USA, LLC	HCFC–142b	194,536
Tulstar Products	HCFC–141b	89,913
	HCFC–123	34,800
	HCFC–124	229,582
USA Refrigerants	HCFC–22	14,865

[79 FR 64288, Oct. 28, 2014]

§ 82.20 Availability of consumption allowances in addition to baseline consumption allowances for class II controlled substances.

(a) A person may obtain at any time during the control period, in accordance with the provisions of this section, consumption allowances equivalent to the quantity of class II controlled substances that the person exported from the United States and its territories to a foreign state in accordance with this section, when that quantity of class II controlled substance was produced in the U.S. or imported into the United States with expended consumption allowances. Both the export of the class II controlled substance and the request for additional consumption allowances must occur during a calendar year in which consumption allowances were issued for that class II controlled substance.

(1) The exporter must submit to the Administrator a request for consumption allowances setting forth the following:

(i) The identities and addresses of the exporter and the recipient of the exports;

(ii) The exporter's Employer Identification Number;

(iii) The names and telephone numbers of contact persons for the exporter and the recipient;

(iv) The quantity (in kilograms) and type of class II controlled substances reported;

(v) The source of the class II controlled substances and the date purchased;

(vi) The date on which, and the port from which, the class II controlled substances were exported from the U.S. or its territories;

(vii) The country to which the class II controlled substances were exported;

(viii) A copy of the bill of lading and the invoice indicating the net quantity (in kilograms) of class II controlled substances shipped and documenting the sale of the class II controlled substances to the purchaser;

(ix) The commodity codes of the class II controlled substances reported; and

(x) A written statement from the producer that the class II controlled substances were produced with expended allowances or a written statement from the importer that the class II controlled substances were imported with expended allowances.

(2) The Administrator will review the information and documentation submitted under paragraph (a)(1) of this section and will issue a notice.

(i) The Administrator will determine the quantity of class II controlled substances that the documentation verifies was exported and issue consumption allowances equivalent to the quantity of class II controlled substances that were exported.

(A) The grant of the consumption allowances will be effective on the date the notice is issued.

(B) The consumption allowances will be granted to the person the exporter indicates, whether it is the producer, the importer, or the exporter.

(ii) The Administrator will issue a notice that the consumption allowances are not granted if the Administrator determines that the information and documentation do not satisfactorily substantiate the exporter's claims.

(b) *International trades of consumption allowances.* (1) A person may increase its consumption allowances for a specified control period through trades with another Party to the Protocol as set forth in this paragraph (b). A person may only receive consumption from Poland or Norway, or both, and only if the nation agrees to trade to the person for the current control period some quantity of consumption that the nation is permitted under the Montreal Protocol.

(2) Trade from a Party—Information requirements. A person must submit the following information to the Administrator:

(i) A signed document from the principal diplomatic representative in the Polish or Norwegian embassy in the U.S. stating that the appropriate authority within that nation will establish or revise consumption limits for the nation to equal the lowest of the following three consumption quantities:

(A) The maximum consumption that the nation is allowed under the Protocol minus the quantity (in kilograms) traded;

(B) The maximum consumption that is allowed under the nation's applicable domestic law minus the quantity (in kilograms) traded; or

(C) The average of the nation's actual consumption level for the three years prior to the trade minus the consumption traded.

(ii) A person requesting a consumption trade from Poland or Norway must also submit to the Administrator a true copy of the document that sets forth the following:

(A) The identity and address of the person;

(B) The identity of the Party;

(C) The names and telephone numbers of contact persons for the person and for the Party;

(D) The chemical type and quantity (in kilograms) of consumption being traded;

(E) Documentation that the Party possesses the necessary quantity of unexpended consumption rights;

(F) The control period(s) to which the trade applies; and

(3) *Notice of trade*. If the request meets the requirement of paragraph (b)(2) of this section for trades from Parties, the Administrator will issue the person a notice. The notice will grant consumption allowances and specify the control period to which the trade applies. The Administrator may disapprove the trade request if it does not meet the requirements of paragraph (b)(2) of this section.

(4) *Trade from a Party*. The Administrator will issue a notice revising the allowances held by the recipient of the trade to equal the unexpended consumption allowances held by the recipient of the trade under this subpart plus the quantity of allowable consumption traded from the Party.

(5) *Effective date of revised consumption limits*. The change in consumption allowances will be effective on the date that the notice is issued.

[68 FR 2848, Jan. 21, 2003, as amended at 71 FR 41172, July 20, 2006; 79 FR 64288, Oct. 28, 2014]

§§ 82.21–82.22 [Reserved]

§ 82.23 Transfers of allowances of class II controlled substances.

(a) *Inter-company transfers*. Effective January 1, 2003, a person (''transferor'') may transfer to any other person (''transferee'') any quantity of the transferor's class II consumption allowances, production allowances, export production allowances, or Article 5 allowances for the same type of allowance as follows:

(i) The transferor must submit to the Administrator a transfer claim setting forth the following:

(A) The identities and addresses of the transferor and the transferee;

(B) The name and telephone numbers of contact persons for the transferor and the transferee;

(C) The type of allowances being transferred, including the names of the class II controlled substances for which allowances are to be transferred;

(D) The quantity (in kilograms) of allowances being transferred;

(E) The control period(s) for which the allowances are being transferred;

(F) [Reserved]

(G) For trades of consumption allowances, production allowances, export production allowances, or Article 5 allowances, the quantity of the 0.1 percent offset applied to the unweighted quantity traded that will be deducted from the transferor's allowance balance.

(ii) The Administrator will determine whether the records maintained by EPA indicate that the transferor possesses unexpended allowances sufficient to cover the transfer claim on the date the transfer claim is processed. The transfer claim is the quantity (in kilograms) to be transferred plus 0.1 percent of that quantity. The Administrator will take into account any previous transfers, any production, and allowable imports and exports of class II controlled substances reported by the transferor. Within three working days of receiving a complete transfer claim, the Administrator will take action to notify the transferor and transferee as follows:

(A) The Administrator will issue a notice indicating that EPA does not object to the transfer if EPA's records

show that the transferor has sufficient unexpended allowances to cover the transfer claim. In the case of transfers of production or consumption allowances, EPA will reduce the transferor's balance of unexpended allowances by the quantity to be transferred plus 0.1 percent of that quantity. In the case of transfers of export production or Article 5 allowances, EPA will reduce the transferor's balance of unexpended allowances, respectively, by the quantity to be transferred plus 0.1 percent of that quantity. The transferor and the transferee may proceed with the transfer when EPA issues a no objection notice. However, if EPA ultimately finds that the transferor did not have sufficient unexpended allowances to cover the claim, the transferor and transferee, where applicable, will be held liable for any knowing violations of the regulations of this subpart that occur as a result of, or in conjunction with, the improper transfer.

(B) The Administrator will issue a notice disallowing the transfer if EPA's records show that the transferor has insufficient unexpended allowances to cover the transfer claim, or that the transferor has failed to respond to one or more Agency requests to supply information needed to make a determination. Either party may file a notice of appeal, with supporting reasons, with the Administrator within 10 working days after receipt of notification. The Administrator may affirm or vacate the disallowance. If no appeal is taken by the tenth working day after notification, the disallowance shall be final on that day.

(iii) The transferor and transferee may proceed with the transfer if the Administrator does not respond to a transfer claim within the three working days specified in paragraph (a)(1)(ii) of this section. In the case of transfers of production or consumption allowances, EPA will reduce the transferor's balance of unexpended allowances by the quantity to be transferred plus 0.1 percent of that quantity. In the case of transfers of export production allowances or Article 5 allowances, EPA will reduce the transferor's balance of unexpended allowances by the quantity to be transferred plus 0.1 percent of that quantity. If EPA ultimately finds that the transferor did not have sufficient unexpended allowances to cover the claim, the transferor and/or the transferee, where applicable, will be held liable for any knowing violations of the regulations of this subpart that occur as a result of, or in conjunction with, the improper transfer.

(b) *Inter-pollutant transfers.* (1) Effective January 1, 2003, a person (transferor) may convert consumption allowances, production allowances or Article 5 allowances for one class II controlled substance to the same type of allowance for another class II controlled substance listed in appendix B of this subpart, following the procedures described in paragraph (b)(3) of this section.

(i) A person (transferor) may only convert allowances for one class II controlled substance for which EPA has issued allowances under § 82.16 to another class II controlled substance for which EPA has issued allowances under § 82.16.

(ii) [Reserved]

(2) Inter-pollutant transfers will be permitted at any time during the control period and during the 30 days after the end of a control period.

(3) The transferor must submit to the Administrator a transfer claim that includes the following:

(i) The identity and address of the transferor;

(ii) The name and telephone number of a contact person for the transferor;

(iii) The type of allowances being converted, including the names of the class II controlled substances for which allowances are to be converted;

(iv) The quantity (in kilograms) and type of allowances to be converted;

(v) The quantity (in kilograms) of allowances to be subtracted from the transferor's unexpended allowances for the first class II controlled substance, to be equal to 100.1 percent of the quantity of allowances converted;

(vi) The quantity (in kilograms) of allowances to be added to the transferee's unexpended allowances for the second class II controlled substance, to be equal to the quantity (in kilograms)

of allowances for the first class II controlled substance being converted multiplied by the quotient of the ozone depletion potential of the first class II controlled substance divided by the ozone depletion potential of the second class II controlled substance, as listed in Appendix B to this subpart;

(vii) The control period(s) for which the allowances are being converted; and

(viii) The quantity (in kilograms) of unexpended allowances of the type and for the control period being converted that the transferor holds under authority of this subpart as of the date the claim is submitted to EPA.

(4) The Administrator will determine whether the records maintained by EPA indicate that the convertor possesses unexpended allowances sufficient to cover the transfer claim on the date the transfer claim is processed (*i.e.*, the quantity (in kilograms) to be converted plus 0.1 percent of that quantity (in kilograms)). EPA will take into account any previous transfers, and any production, imports (not including transshipments or used class II controlled substances), or exports (not including transhipments or used class II controlled substances) of class II controlled substances reported by the convertor. Within three working days of receiving a complete transfer claim, the Administrator will take action to notify the convertor as follows:

(i) The Administrator will issue a notice indicating that EPA does not object to the transfer if EPA's records show that the convertor has sufficient unexpended allowances to cover the transfer claim. EPA will reduce the transferor's balance of unexpended allowances by the quantity to be converted plus 0.1 percent of that quantity (in kilograms). When EPA issues a no objection notice, the transferor may proceed with the transfer. However, if EPA ultimately finds that the transferor did not have sufficient unexpended allowances to cover the claim, the transferor will be held liable for any violations of the regulations of this subpart that occur as a result of, or in conjunction with, the improper transfer.

(ii) The Administrator will issue a notice disallowing the transfer if EPA's records show that the transferor has insufficient unexpended allowances to cover the transfer claim, or that the transferor has failed to respond to one or more Agency requests to supply information needed to make a determination. The transferor may file a notice of appeal, with supporting reasons, with the Administrator within 10 working days after receipt of notification. The Administrator may affirm or vacate the disallowance. If no appeal is taken by the tenth working day after notification, the disallowance shall be final on that day.

(iii) The transferor may proceed with the transfer if the Administrator does not respond to a transfer claim within the three working days specified in paragraph (b)(4) of this section. EPA will reduce the transferor's balance of unexpended allowances by the quantity (in kilograms) to be converted plus 0.1 percent of that quantity (in kilograms). The transferor will be held liable for any violations of the regulations of this subpart that occur as a result of, or in conjunction with, the improper transfer if EPA ultimately finds that the transferor did not have sufficient unexpended allowances or credits to cover the claim.

(c) *Inter-company transfers and Inter-pollutant transfers.* If a person requests an inter-company transfer and an inter-pollutant transfer simultaneously, the quantity (in kilograms) subtracted from the transferor's unexpended production or consumption allowances for the first class II controlled substance will be equal to 100.1 percent of the quantity (in kilograms) of allowances that are being converted and transferred.

(d) *Permanent transfers.* The procedures in paragraph (a) of this section apply to permanent inter-company transfers of baseline production allowances or baseline consumption allowances. A person receiving a permanent transfer of baseline production allowances or baseline consumption allowances (the transferee) for a specific class II controlled substance will be the person who has their baseline allowances adjusted in accordance with phaseout schedules in this subpart. No person may conduct permanent inter-

pollutant transfers of baseline production allowances or baseline consumption allowances.

[68 FR 2848, Jan. 21, 2003, as amended at 78 FR 20028, Apr. 3, 2013; 85 FR 15298, Mar. 17, 2020]

§ 82.24 Recordkeeping and reporting requirements for class II controlled substances.

(a) *Recordkeeping and reporting.* Any person who produces, imports, exports, transforms, or destroys class II controlled substances must comply with the following recordkeeping and reporting requirements:

(1) Reports required by this section must be submitted to the Administrator within 45 days of the end of the applicable reporting period, unless otherwise specified. Starting May 18, 2020, reports that are available for submission through the Central Data Exchange must be submitted electronically through that tool.

(2) Revisions of reports that are required by this section must be mailed to the Administrator within 180 days of the end of the applicable reporting period, unless otherwise specified.

(3) Records and copies of reports required by this section must be retained for three years.

(4) Quantities of class II controlled substances must be stated in terms of kilograms in reports required by this section.

(5) Reports and records required by this section may be used for purposes of compliance determinations. These requirements are not intended as a limitation on the use of other evidence admissible under the Federal Rules of Evidence. Failure to provide the reports, petitions and records required by this section and to certify the accuracy of the information in the reports, petitions and records required by this section, will be considered a violation of this subpart. False statements made in reports, petitions and records will be considered violations of Section 113 of the Clean Air Act and under 18 U.S.C. 1001.

(b) *Producers.* Persons (''producers'') who produce class II controlled substances during a control period must comply with the following recordkeeping and reporting requirements:

(1) *Reporting—Producers.* For each quarter, each producer of a class II controlled substance must provide the Administrator with a report containing the following information:

(i) The quantity (in kilograms) of production of each class II controlled substance used in processes resulting in their transformation by the producer and the quantity (in kilograms) intended for transformation by a second party;

(ii) The quantity (in kilograms) of production of each class II controlled substance used in processes resulting in their destruction by the producer and the quantity (in kilograms) intended for destruction by a second party;

(iii) The expended allowances for each class II controlled substance;

(iv) [Reserved]

(v) The quantity (in kilograms) of class II controlled substances sold or transferred during the quarter to a person other than the producer for use in processes resulting in their transformation or eventual destruction;

(vi) A list of the quantities and names of class II controlled substances, exported by the producer to a Party to the Protocol, that will be transformed or destroyed and therefore were not produced expending production or consumption allowances;

(vii) For transformation in the U.S. or by a person of another Party, one copy of a transformation verification from the transformer for a specific class II controlled substance and a list of additional quantities shipped to that same transformer for the quarter;

(viii) For destruction in the U.S. or by a person of another Party, one copy of a destruction verification as required in paragraph (e) of this section for a particular destroyer, destroying the same class II controlled substance, and a list of additional quantities shipped to that same destroyer for the quarter; and

(ix) [Reserved]

(x) In cases where the producer produced class II controlled substances using Article 5 allowances, a list of U.S. entities that purchased those class II controlled substances and exported them to Article 5 countries.

(2) *Recordkeeping—Producers.* Every producer of a class II controlled substance during a control period must maintain the following records:

(i) Dated records of the quantity (in kilograms) of each class II controlled substance produced at each facility;

(ii) Dated records of the quantity (in kilograms) of class II controlled substances produced for use in processes that result in their transformation or for use in processes that result in their destruction;

(iii) Dated records of the quantity (in kilograms) of class II controlled substances sold for use in processes that result in their transformation or for use in processes that result in their destruction;

(iv) Dated records of the quantity (in kilograms) of class II controlled substances produced with Article 5 allowances;

(v) Copies of invoices or receipts documenting sale of class II controlled substances for use in processes that result in their transformation or for use in processes that result in their destruction;

(vi) Dated records of the quantity (in kilograms) of each class II controlled substance used at each facility as feedstocks or destroyed in the manufacture of a class II controlled substance or in the manufacture of any other substance, and any class II controlled substance introduced into the production process of the same class II controlled substance at each facility;

(vii) Dated records of the quantity (in kilograms) of raw materials and feedstock chemicals used at each facility for the production of class II controlled substances;

(viii) Dated records of the shipments of each class II controlled substance produced at each plant;

(ix) The quantity (in kilograms) of class II controlled substances, the date received, and names and addresses of the source of used materials containing class II controlled substances which are recycled or reclaimed at each plant;

(x) Records of the date, the class II controlled substance, and the estimated quantity of any spill or release of a class II controlled substance that equals or exceeds 100 pounds;

(xi) Transformation verification in the case of transformation, or the destruction verification in the case of destruction as required in paragraph (e) of this section showing that the purchaser or recipient of a class II controlled substance, in the U.S. or in another country that is a Party, certifies the intent to either transform or destroy the class II controlled substance, or sell the class II controlled substance for transformation or destruction in cases when allowances were not expended; and

(xii) [Reserved]

(xiii) Written verifications from a U.S. purchaser that the class II controlled substance was exported to an Article 5 country in cases where Article 5 allowances were expended to produce the class II controlled substance.

(3) For any person who fails to maintain the records required by this paragraph, or to submit the report required by this paragraph, the Administrator may assume that the person has produced at full capacity during the period for which records were not kept, for purposes of determining whether the person has violated the prohibitions at § 82.15.

(c) *Importers.* Persons (''importers'') who import class II controlled substances during a control period must comply with the following recordkeeping and reporting requirements:

(1) *Reporting—Importers.* For each quarter, an importer of a class II controlled substance (including importers of used class II controlled substances) must submit to the Administrator a report containing the following information:

(i) Summaries of the records required in paragraphs (c)(2)(i) through (xvi) of this section for the previous quarter;

(ii) The total quantity (in kilograms) imported of each class II controlled substance for that quarter;

(iii) The commodity code for the class II controlled substances imported, which must be one of those listed in Appendix K to this subpart;

(iv) The quantity (in kilograms) of those class II controlled substances imported that are used class II controlled substances;

(v) The quantity (in kilograms) of class II controlled substances imported for that quarter and totaled by chemical for the control period to date;

(vi) [Reserved]

(vii) The quantity (in kilograms) of class II controlled substances imported for use in processes resulting in their transformation or destruction;

(viii) The quantity (in kilograms) of class II controlled substances sold or transferred during that quarter to each person for use in processes resulting in their transformation or eventual destruction; and

(ix) Transformation verifications showing that the purchaser or recipient of imported class II controlled substances intends to transform those substances or destruction verifications showing that the purchaser or recipient intends to destroy the class II controlled substances (as provided in paragraph (e) of this section).

(2) *Recordkeeping—Importers.* An importer of a class II controlled substance (including used class II controlled substances) must maintain the following records:

(i) The quantity (in kilograms) of each class II controlled substance imported, either alone or in mixtures, including the percentage of each mixture which consists of a class II controlled substance;

(ii) The quantity (in kilograms) of those class II controlled substances imported that are used and the information provided with the petition where a petition is required under paragraph (c)(3) of this section;

(iii) The quantity (in kilograms) of class II controlled substances other than transhipments or used substances imported for use in processes resulting in their transformation or destruction;

(iv) The quantity (in kilograms) of class II controlled substances other than transhipments or used substances imported and sold for use in processes that result in their destruction or transformation;

(v) The date on which the class II controlled substances were imported;

(vi) The port of entry through which the class II controlled substances passed;

(vii) The country from which the imported class II controlled substances were imported;

(viii) The commodity code for the class II controlled substances shipped, which must be one of those listed in Appendix K to this subpart;

(ix) The importer number for the shipment;

(x) A copy of the bill of lading for the import;

(xi) The invoice for the import;

(xii) The quantity (in kilograms) of imports of used class II controlled substances;

(xiii) The U.S. Customs entry number;

(xiv) Dated records documenting the sale or transfer of class II controlled substances for use in processes resulting in their transformation or destruction; and

(xv) Copies of transformation verifications or destruction verifications indicating that the class II controlled substances will be transformed or destroyed (as provided in paragraph (e) of this section).

(3) *Petition to import used class II controlled substances and transhipment-Importers.* For each individual shipment over 5 pounds of a used class II controlled substance as defined in § 82.3 for which EPA has apportioned baseline production and consumption allowances, an importer must submit directly to the Administrator, at least 40 working days before the shipment is to leave the foreign port of export, the following information in a petition:

(i) The name, commodity code and quantity (in kilograms) of the used class II controlled substance to be imported;

(ii) The name and address of the importer, the importer ID number, the contact person, email address, and phone number;

(iii) Name, address, contact person, email address, and phone number of all previous source facilities from which the used class II controlled substance was recovered;

(iv) A detailed description of the previous use of the class II controlled substance at each source facility and a best estimate of when the specific controlled substance was put into the equipment at each source facility, and,

when possible, documents indicating the date the material was put into the equipment;

(v) A list of the name, make and model number of the equipment from which the material was recovered at each source facility;

(vi) Name, address, contact person, email address, and phone number of the exporter and of all persons to whom the material was transferred or sold after it was recovered from the source facility;

(vii) The U.S. port of entry for the import, the expected date of shipment and the vessel transporting the chemical. If at the time of submitting a petition the importer does not know the U.S. port of entry, the expected date of shipment and the vessel transporting the chemical, and the importer receives a non-objection notice for the individual shipment in the petition, the importer is required to notify the Administrator of this information prior to the actual U.S. Customs entry of the individual shipment;

(viii) A description of the intended use of the used class II controlled substance, and, when possible, the name, address, contact person, email address, and phone number of the ultimate purchaser in the United States;

(ix) The name, address, contact person, email address, and phone number of the U.S. reclamation facility, where applicable;

(x) If someone at the source facility recovered the class II controlled substance from the equipment, the name, email address, and phone number of that person;

(xi) If the imported class II controlled substance was reclaimed in a foreign Party, the name, address, contact person, email address, and phone number of any or all foreign reclamation facility(ies) responsible for reclaiming the cited shipment;

(xii) The export license, application for an export license, or official communication acknowledging the export from the appropriate government agency in the country of export and, if recovered in another country, the export license or official communication from the appropriate government agency in that country, and quantity authorized for export in kilograms on the export license, and an English translation of these documents;

(xiii) If the imported used class II controlled substance is intended to be sold as a refrigerant in the United States, the name, address, and email address of the EPA-certified U.S. reclaimer who will bring the material to the standard required under subpart F of this part, if not already reclaimed to those specifications; and

(xiv) A certification of accuracy of the information submitted in the petition.

(4) *Review of petition to import used class II controlled substances and transhipments—Importers.* Starting on the first working day following receipt by the Administrator of a petition to import a used class II controlled substance, the Administrator will initiate a review of the information submitted under paragraph (c)(3) of this section and take action within 40 working days to issue either an objection-notice or a non-objection notice for the individual shipment to the person who submitted the petition to import the used class II controlled substance.

(i) The Administrator may issue an objection notice to a petition for the following reasons:

(A) If the Administrator determines that the information is insufficient, that is, if the petition lacks or appears to lack any of the information required under paragraph (c)(3) of this section or other information that may be requested during the review of the petition necessary to verify that the controlled substance is used;

(B) If the Administrator determines that any portion of the petition contains false or misleading information, or the Administrator has information from other U.S. or foreign government agencies indicating that the petition contains false or misleading information;

(C) If the transaction appears to be contrary to provisions of the Vienna Convention on Substances that Deplete the Ozone Layer, the Montreal Protocol and Decisions by the Parties, or the non-compliance procedures outlined and instituted by the Implementation Committee of the Montreal Protocol;

(D) If the appropriate government agency in the exporting country has not agreed to issue an export license for the cited individual shipment of used class II controlled substance;

(E) If reclamation capacity is installed or is being installed for that specific class II controlled substance in the country of recovery or country of export and the capacity is funded in full or in part through the Multilateral Fund.

(ii) Within ten (10) working days after receipt of the objection notice, the importer may re-petition the Administrator, only if the Administrator indicated ''insufficient information'' as the basis for the objection notice. If no appeal is taken by the tenth working day after the date on the objection notice, the objection shall become final. Only one re-petition will be accepted for any original petition received by EPA.

(iii) Any information contained in the re-petition which is inconsistent with the original petition must be identified and a description of the reason for the inconsistency must accompany the re-petition.

(iv) In cases where the Administrator does not object to the petition based on the criteria listed in paragraph (c)(4)(i) of this section, the Administrator will issue a non-objection notice.

(v) To pass the approved used class II controlled substances through U.S. Customs, the non-objection notice issued by EPA must accompany the shipment through U.S. Customs.

(vi) If for some reason, following EPA's issuance of a non-objection notice, new information is brought to EPA's attention which shows that the non-objection notice was issued based on false information, then EPA has the right to:

(A) Revoke the non-objection notice;

(B) Pursue all means to ensure that the class II controlled substance is not imported into the U.S.; and

(C) Take appropriate enforcement actions.

(vii) A person receiving the non-objection notice is permitted to import the individual shipment only within one year of the date stamped on the non-objection notice.

(viii) A person receiving a non-objection notice from the Administrator for a petition to import used class II controlled substances must maintain the following records:

(A) A copy of the petition;

(B) The EPA non-objection notice;

(C) The bill of lading for the import; and

(D) The U.S. Customs entry number.

(5) Recordkeeping for transhipments—Importers. Any person who tranships a class II controlled substance must maintain records that indicate:

(i) That the class II controlled substance shipment originated in a foreign country;

(ii) That the class II controlled substance shipment is destined for another foreign country; and

(iii) That the class II controlled substance shipment will not enter interstate commerce within the U.S.

(6) *Certification of intent to import for destruction*. For each individual shipment of a class II controlled substance imported with the intent to destroy that substance, an importer must submit electronically to the Administrator, at least 30 working days before the shipment is to leave the foreign port of export, the following information:

(i) Name, commodity code, and quantity in kilograms of each controlled substance to be imported;

(ii) Name and address of the importer, the importer ID number, and the contact person's name, email address, and phone number;

(iii) Name and address of any intermediary who aggregates controlled substances imported for destruction, and the contact person's name, email address, and phone number;

(iv) The U.S. port of entry for the import, the expected date of shipment and the vessel transporting the material. If at the time of submitting the certification of intent to import for destruction the importer does not know the U.S. port of entry, the expected date of shipment and the vessel transporting the material, and the importer receives a non-objection notice for the individual shipment in the petition, the importer is required to notify the Administrator of this information prior

to the entry of the individual shipment into the United States;

(v) Name, address, contact person, email address, and phone number of the responsible party at the destruction facility;

(vi) The export license, application for an export license, or official communication acknowledging the export from the appropriate government agency in the country of export and, if recovered in another country, the export license or official communication from the appropriate government agency in that country, and quantity authorized for export in kilograms on the export license, and an English translation of these documents; and

(vii) A certification of accuracy of the information submitted in the certification.

(7) *Destruction verification*. For each individual shipment of a class II controlled substance imported with the intent to destroy that substance, an importer must submit to the Administrator a copy of the destruction verification within 30 days after destruction of the controlled substance(s).

(8) *Review of certification of intent to import for destruction*. (i) Starting on the first working day following receipt by the Administrator of a certification of intent to import a class II controlled substance for destruction, the Administrator will initiate a review of the information submitted under paragraph (c)(6) of this section and take action within 30 working days to issue either an objection notice or a non-objection notice for the individual shipment to the person who submitted the certification of intent to import the class II controlled substance for destruction.

(ii) The Administrator may issue an objection notice if the petition lacks or appears to lack any of the information required under paragraph (c)(6) of this section or for the reasons listed in paragraphs (c)(4)(i)(B) through (E) of this section.

(iii) In cases where the Administrator does not object to the petition, the Administrator will issue a non-objection notice.

(iv) To pass the approved class II controlled substances through U.S. Customs, the non-objection notice issued by EPA must accompany the shipment through U.S. Customs.

(v) If for some reason, following EPA's issuance of a non-objection notice, new information is brought to EPA's attention which shows that the non-objection notice was issued based on false information, then EPA has the right to:

(A) Revoke the non-objection notice;

(B) Pursue all means to ensure that the class II controlled substance is not imported into the United States; and

(C) Take appropriate enforcement actions.

(9) *Timing of import*. A person receiving the non-objection notice is permitted to import the individual shipment only within one year of the date stamped on the non-objection notice.

(10) *Additional recordkeeping requirements—importers of used, recycled, or reclaimed controlled substances*. A person receiving a non-objection notice from the Administrator for a certification of intent to import class II controlled substances for destruction must maintain the following records:

(i) A copy of the certificate of intent to import for destruction;

(ii) The EPA non-objection notice;

(iii) A copy of the export license, export license application, or official communication from the appropriate government agency in the country of export;

(iv) U.S. Customs entry documents for the import that must include one of the commodity codes from appendix K to this subpart;

(v) The date, amount, and type of controlled substance sent for destruction, per shipment;

(vi) An invoice from the destruction facility verifying the shipment was received;

(vii) A copy of the destruction verification from the destruction facility; and

(viii) An English translation of the document in paragraph (c)(10)(iii) of this section.

(11) *Recordkeeping requirements-aggregators*. A person identified in paragraph (c)(6)(iii) of this section as aggregating a controlled substance prior to destruction must:

(i) Maintain transactional records that include the name and address of

the entity from whom they received the controlled substance imported for destruction;

(ii) Maintain transactional records that include the name and address of the entity to whom they sent the controlled substance imported for destruction;

(iii) Maintain records that include the date and quantity of the imported controlled substance received for destruction;

(iv) Maintain records that include the date and quantity of the imported controlled substance sent for destruction; and

(v) If the person is the final aggregator of such a controlled substance before the material is destroyed, maintain a copy of the destruction verification.

(d) *Exporters*. Persons (''exporters'') who export class II controlled substances during a control period must comply with the following reporting requirements:

(1) *Reporting requirements—exporters*. For any exports of class II controlled substances not reported under paragraph (b)(2) of this section (reporting for producers of class II controlled substances), each exporter who exported a class II controlled substance must submit to the Administrator the following information within 30 days after the end of each quarter in which the unreported exports left the United States:

(i) The names and addresses of the exporter and the recipient of the exports;

(ii) The exporter's Employer Identification Number;

(iii) The type and quantity of each class II controlled substance exported, including the quantity of controlled substance that is used, reclaimed, or recycled;

(iv) The date on which, and the port from which, the class II controlled substances were exported from the U.S. or its territories;

(v) The country to which the class II controlled substances were exported;

(vi) The quantity (in kilograms) exported to each Article 5 country;

(vii) The commodity code for the class II controlled substances shipped, which must be one of those listed in Appendix K to this subpart;

(viii) For persons reporting transformation or destruction, the invoice or sales agreement containing language similar to the transformation verifications that the purchaser or recipient of imported class II controlled substances intends to transform those substances, or destruction verifications showing that the purchaser or recipient intends to destroy the class II controlled substances (as provided in paragraph (e) of this section).

(2) [Reserved]

(3) *Reporting Article 5 allowances—Exporters*. In addition to the information required in paragraph (d)(1) of this section, any exporter using Article 5 allowances must also provide the following to the Administrator:

(i) The Employer Identification Number of the shipper or their agent; and

(ii) The exporting vessel on which the class II controlled substances were shipped.

(4) *Reporting used class II controlled substances—Exporters*. Any exporter of used class II controlled substances must indicate on the bill of lading or invoice that the class II controlled substance is used, as defined in § 82.3.

(e) *Transformation and destruction*. Any person who transforms or destroys class II controlled substances must comply with the following recordkeeping and reporting requirements:

(1) *Recordkeeping—Transformation and destruction*. Any person who transforms or destroys class II controlled substances produced or imported by another person must maintain the following:

(i) Copies of the invoices or receipts documenting the sale or transfer of the class II controlled substances to the person;

(ii) Records identifying the producer or importer of the class II controlled substances received by the person;

(iii) Dated records of inventories of class II controlled substances at each plant on the first day of each quarter;

(iv) Dated records of the quantity (in kilograms) of each class II controlled substance transformed or destroyed;

(v) In the case where class II controlled substances were purchased or

transferred for transformation purposes, a copy of the person's transformation verification as provided under paragraph (e)(3)of this section.

(vi) Dated records of the names, commercial use, and quantities (in kilograms) of the resulting chemical(s) when the class II controlled substances are transformed; and

(vii) Dated records of shipments to purchasers of the resulting chemical(s) when the class II controlled substances are transformed.

(viii) In the case where class II controlled substances were purchased or transferred for destruction purposes, a copy of the person's destruction verification, as provided under paragraph (e)(5) of this section.

(2) *Reporting—Transformation and destruction.* Any person who transforms or destroys class II controlled substances and who has submitted a transformation verification ((paragraph (e)(3) of this section) or a destruction verification (paragraph (e)(5) of this section) to the producer or importer of the class II controlled substances, must report the following:

(i) The names and quantities (in kilograms) of the class II controlled substances transformed for each control period within 45 days of the end of such control period; and

(ii) The names and quantities (in kilograms) of the class II controlled substances destroyed for each control period within 45 days of the end of such control period.

(3) *Reporting—Transformation.* Any person who purchases class II controlled substances for purposes of transformation must provide the producer or importer with a transformation verification that the class II controlled substances are to be used in processes that result in their transformation.

(i) The transformation verification shall include the following:

(A) Identity and address of the person intending to transform the class II controlled substances;

(B) The quantity (in kilograms) of class II controlled substances intended for transformation;

(C) Identity of shipments by purchase order number(s), purchaser account number(s), by location(s), or other means of identification;

(D) Period of time over which the person intends to transform the class II controlled substances; and

(E) Signature of the verifying person.

(ii) [Reserved]

(4) *Reporting—Destruction.* Any person who destroys class II controlled substances shall provide EPA with a one-time report containing the following information:

(i) The destruction unit's destruction efficiency;

(ii) The methods used to record the volume destroyed;

(iii) The methods used to determine destruction efficiency;

(iv) The name of other relevant federal or state regulations that may apply to the destruction process;

(v) Any changes to the information in paragraphs (e)(4)(i), (ii), and (iii) of this section must be reflected in a revision to be submitted to EPA within 60 days of the change(s).

(5) *Reporting—Destruction.* Any person who purchases or receives and subsequently destroys class II controlled substances that were originally produced without expending allowances shall provide the producer or importer from whom it purchased or received the class II controlled substances with a verification that the class II controlled substances will be used in processes that result in their destruction.

(i) The destruction verification shall include the following:

(A) Identity and address of the person intending to destroy class II controlled substances;

(B) Indication of whether those class II controlled substances will be completely destroyed, as defined in § 82.3, or less than completely destroyed, in which case the destruction efficiency at which such substances will be destroyed must be included;

(C) Period of time over which the person intends to destroy class II controlled substances; and

(D) Signature of the verifying person.

(ii) [Reserved]

(f) *Heels-Recordkeeping and reporting.* Any person who brings into the U.S. a rail car, tank truck, or ISO tank containing a heel, as defined in § 82.3, of

class II controlled substances, must take the following actions:

(1) Indicate on the bill of lading or invoice that the class II controlled substance in the container is a heel.

(2) Report within 30 days of the end of the control period the quantity (in kilograms) brought into the U.S. and certify:

(i) That the residual quantity (in kilograms) in each shipment is no more than 10 percent of the volume of the container;

(ii) That the residual quantity (in kilograms) in each shipment will either:

(A) Remain in the container and be included in a future shipment;

(B) Be recovered and transformed;

(C) Be recovered and destroyed; or

(D) Be recovered for a non-emissive use.

(3) Report on the final disposition of each shipment within 30 days of the end of the control period.

[68 FR 2848, Jan. 21, 2003, as amended at 71 FR 41172, July 20, 2006; 81 FR 6768, Feb. 9, 2016; 85 FR 15298, Mar. 17, 2020]

Appendix A to Subpart A of Part 82—Class I Controlled Substances

Class 1 controlled substances	ODP
A. Group I:	
$CFCl_3$-Trichlorofluoromethane (CFC-ll)	1.0
CF_2 Cl_2-Dichlorofifluoromethane (CFC-12)	1.0
C_2 F_3 Cl_3-Trichlorotrifluoroethane (CFC-113)	0.8
C_2 F_4 Cl_2-Dichlorotetrafluoroethane (CFC-114)	1.0
C_2 F_5 Cl-Monochloropentafluoroethane (CFC-115)	0.6
All isomers of the above chemicals	
B. Group II:	
CF_2 ClBr-Bromochlorodifluoromethane (Halon-1211)	3.0
CF_3 Br-Bromotrifluoromethane (Halon-1301)	10.0
C_2 F_4 Br_2-Dibromotetrafluoroethane (Halon-2402)	6.0
All isomers of the above chemicals	
C. Group III:	
CF_3 Cl-Chlorotrifluoromethane (CFC-13)	1.0
C_2 FCl_5-(CFC-111)	1.0
C_2 F_2 Cl_4-(CFC-112)	1.0
C_3 FCl_7-(CFC-211)	1.0
C_3 F_2 Cl_6-(CFC-212)	1.0
C_3 F_3 Cl_5-(CFC-213)	1.0
C_3 F_4 Cl_4-(CFC-214)	1.0
C_3 F_5 Cl_3-(CFC-215)	1.0
C_3 F_6 Cl_2-(CFC-216)	1.0
C_3 F_7 Cl-(CFC-217)	1.0
All isomers of the above chemicals	
D. Group IV: CCl_4-Carbon Tetrachloride	1.1
E. Group V:	
C_2 H_3 Cl_3-1,1,1 Trichloroethane (Methyl chloroform)	0.1
All isomers of the above chemical except 1,1,2-trichloroethane	
F. Group VI: CH_3 Br—Bromomethane (Methyl Bromide)	0.7
G. Group VII:	
$CHFBR_2$	1.00
CHF_2 Br (HBFC–2201)	0.74
CH_2 FBr	0.73
C_2 $HFBr_4$	0.3–0.8
C_2 HF_2 Br_3	0.5–1.8
C_2 HF_3 Br_2	0.4–1.6
C_2 HF_4 Br	0.7–1.2
C_2 H_2 FBr_3	0.1–1.1
C_2 H_2 F_2 Br_2	0.2–1.5
C_2 H_2 F_3 Br	0.7–1.6
C_2 H_2 FBr_2	0.1–1.7
C_2 H_3 F_2 Br	0.2–1.1
C_2 H_4 FBr	0.07–0.1
C_3 $HFBr_6$	0.3–1.5
C_3 HF_2 Br_5	0.2–1.9
C_3 HF_3 Br_4	0.3–1.8
C_3 HF_4 Br_3	0.5–2.2
C_3 HF_5 Br_2	0.9–2.0
C_3 HF_6 Br	0.7–3.3
C_3 H_2 FBR_5	0.1–1.9
C_3 H_2 F_2 BR_4	0.2–2.1
C_3 H_2 F_3 Br_3	0.2–5.6
C_3 H_2 F_4 Br_2	0.3–7.5
C_3 H_2 F_5 BR	0.9–14
C_3 H_3 FBR_4	0.08–1.9
C_3 H_3 F_2 Br_3	0.1–3.1
C_3 H_3 F_3 Br_2	0.1–2.5
C_3 H_3 F_4 Br	0.3–4.4
C_3 H_4 FBr_3	0.03–0.3
C_3 H_4 F_2 Br_2	0.1–1.0
C_3 H_4 F_3 Br	0.07–0.8
C_3 H_5 FBr_2	0.04–0.4
C_3 H_5 F_2 Br	0.07–0.8
C_3 H_6 FB	0.02–0.7
H. Group VIII:	
CH2BrCl (Chlorobromomethane 0.12.	

[60 FR 24986, May 10, 1995, as amended at 68 FR 42892, July 18, 2003]

Appendix B to Subpart A of Part 82—Class II Controlled Substances [a b]

Controlled substance	ODP
1. HCFC-21 (CHFCl2) Dichlorofluoromethane	0.04
2. HCFC-22 (CHF2Cl) Monochlorodifluoromethane	0.055
3. HCFC-31 (CH2FCl) Monochlorofluoromethane	0.02
4. HCFC-121 (C2HFCl4) Tetrachlorofluoroethane	0.01–0.04
5. HCFC-122 (C2HF2Cl3) Trichlorodifluoroethane	0.02–0.08
6. HCFC-123 (C2HF3Cl2) Dichlorotrifluoroethane	0.02
7. HCFC-124 (C2HF4Cl) Monochlorotetrafluoroethane	0.022
8. HCFC-131 (C2H2FCl3) Trichlorofluoroethane	0.007–0.05

Controlled substance	ODP
9. HCFC-132 (C2H2F2Cl2) Dichlorodifluoroethane	0.008–0.05
10. HCFC-133 (C2H2F3Cl) Monochlorotrifluoroethane	0.02–0.06
11. HCFC-141 (C2H3FCl2) Dichlorofluoroethane	0.005–0.07
12. HCFC-141b (CH3CFCl2) Dichlorofluoroethane	0.11
13. HCFC-142 (C2H3F2Cl) Chlorodifluoroethane	0.008–0.07
14. HCFC-142b (CH3CF2Cl) Monochlorodifluoroethane	0.065
15. HCFC-151 (C2H4FCl) Chlorofluoroethane	0.003–0.005
16. HCFC-221 (C3HFCl6) Hexachlorofluoropropane	0.015–0.07
17. HCFC-222 (C3HF2Cl5) Pentachlorodifluoropropane	0.01–0.09
18. HCFC-223 (C3HF3Cl4) Tetrachlorotrifluoropropane	0.01–0.08
19. HCFC-224 (C3HF4Cl3) Trichlorotetrafluoropropane	0.01–0.09
20. HCFC-225 (C3HF5Cl2) Dichloropentafluoropropane	0.02–0.07
21. HCFC-225ca (CF3CF2CHCl2) Dichloropentafluoropropane	0.025
22. HCFC-225cb (CF2ClCF2CHClF) Dichloropentafluoropropane	0.033
23. HCFC-226 (C3HF6Cl) Monochlorohexafluoropropane	0.02–0.1
24. HCFC-231 (C3H2FCl5) Pentachlorofluoropropane	0.05–0.09
25. HCFC-232 (C3H2F2Cl4) Tetrachlorodifluoropropane	0.008–0.1
26. HCFC-233 (C3H2F3Cl3) Trichlorotrifluoropropane	0.007–0.23
27. HCFC-234 (C3H2F4Cl2) Dichlorotetrafluoropropane	0.01–0.28
28. HCFC-235 (C3H2F5Cl) Monochloropentafluoropropane	0.03–0.52
29. HCFC-241 (C3H3FCl4) Tetrachlorofluoropropane	0.004–0.09
30. HCFC-242 (C3H3F2Cl3) Trichlorodifluoropropane	0.005–0.13
31. HCFC-243 (C3H3F3Cl2) Dichlorotrifluoropropane	0.007–0.12
32. HCFC-244 (C3H3F4Cl) Monochlorotetrafluoropropane	0.009–0.14
33. HCFC-251 (C3H4FCl3) Monochlorotetrafluoropropane	0.001–0.01
34. HCFC-252 (C3H4F2Cl2) Dichlorodifluoropropane	0.005–0.04
35. HCFC-253 (C3H4F3Cl) Monochlorotrifluoropropane	0.003–0.03
36. HCFC-261 (C3H5FCl2) Dichlorofluoropropane	0.002–0.02
37. HCFC-262 (C3H5F2Cl) Monochlorodifluoropropane	0.002–0.02
38. HCFC-271 (C3H6FCl) Monochlorofluoropropane	0.001–0.03

[a] According to Annex C of the Montreal Protocol, "Where a range of ODPs is indicated, the highest value in that range shall be used for the purposes of the Protocol. The ODPs listed as single value have been determined from calculations based on laboratory measurements. Those listed as a range are based on estimates and are less certain. The range pertains to an isomeric group. The upper value is the estimate of the ODP of the isomer with the highest ODP, and the lower value is the estimate of the ODP of the isomer with the lowest ODP.

[b] This table includes all isomers of the substances above, regardless of whether the isomer is explicitly listed on its own.

[79 FR 64288, Oct. 28, 2014]

APPENDIX C TO SUBPART A OF PART 82 [RESERVED]

APPENDIX D TO SUBPART A OF PART 82—HARMONIZED TARIFF SCHEDULE DESCRIPTION OF PRODUCTS THAT MAY CONTAIN CONTROLLED SUBSTANCES IN APPENDIX A, CLASS I, GROUPS I AND II

This appendix is based on information provided by the Ozone Secretariat of the United Nations Ozone Environment Programme.** The Appendix lists available U.S. harmonized tariff schedule codes identifying headings and subheadings for Annex D products that may contain controlled substances.

The Harmonized Tariff Schedule of the United States uses an enumeration system to identify products imported and exported to and from the U.S. This system relies on a four digit heading, a four digit subheading and additional two digit statistical suffix to characterize products. The United States uses the suffix for its own statistical records and analyses. This Appendix lists only headings and subheadings.

While some can be readily associated with harmonized system codes, many products cannot be tied to HS classifications unless their exact composition and the presentation are known. It should be noted that the specified HS classifications represent the most likely headings and subheadings which may contain substances controlled by the Montreal Protocol. The codes given should only be used as a starting point; further verfication is needed to ascertain whether or not the products actually contain controlled substances.

CATEGORY 1. AUTOMOBILE AND TRUCK AIR CONDITIONING UNITS (WHETHER INCORPORATED IN VEHICLES OR NOT)

There are no separate code numbers for air conditioning units specially used in automobiles and trucks. Although a code has been proposed for car air conditioners, it is not yet officially listed in the Harmonized

** "A Note Regarding the Harmonized System Code Numbers for the Products Listed in Annex D." Adopted by Decision IV/15 paragraph 3, of the Fourth Meeting of the Parties in Copenhagen, 23–25 November, 1992.

Tariff Schedule (see category 2). The following codes apply to the vehicles potentially containing air conditioning units.

Heading/Subheading	*Article Description*
8701.(10, 20, 30, 90)***	Tractors.
8702	Public-transport type passenger motor vehicles.
8702.10	With compression-ignition internal-combustion piston engine (diesel or semi-diesel).
8702.90	Other.
8703	Motor cars and other motor vehicles principally designed for the transport of persons (other than those of heading 8702), including station wagons and racing cars.
8703.10	Vehicles specially designed for traveling on snow; golf carts and similar vehicles; includes subheading 10.10 and 10.50.
8703.(21, 22, 23, 24)	Other vehicles, with spark-ignition internal combustion reciprocating engines.
8703.(31, 32, 33, 90)	Other vehicles, with compression-ignition internal combustion piston engine (diesel or semi-diesel).
8704	Motor vehicles for the transport of goods.
8704.10.(10, 50)	Dumpers designed for off-highway use.
8704.(21, 22, 23)	Other, with compression-ignition internal combustion piston engine (diesel or semi-diesel).
8704.(31, 32, 90)	Other, with compression-ignition internal combustion piston engine.
8705	Special purpose motor vehicles, other than those principally designed for the transport of persons or goods (for example, wreckers, mobile cranes, fire fighting vehicles, concrete mixers, road sweepers, spraying vehicles, mobile workshops, mobile radiological units).
8705.10	Crane lorries.
8705.20	Mobile drilling derricks.
8705.30	Fire fighting vehicles.
8705.90	Other.

***At this time vehicle air conditioning units are considered components of vehicles or are classified under the general category for air conditioning and refrigeration equipment. Vehicles containing air conditioners are therefore considered products containing controlled substances.

CATEGORY 2. DOMESTIC AND COMMERCIAL REFRIGERATION AND AIR CONDITIONING/HEAT PUMP EQUIPMENT

Domestic and commercial air conditioning and refrigeration equipment fall primarily under headings 8415 and 8418.

Heading/Subheading	*Article Description*
8415	Air conditioning machines, comprising a motor-driven fan and elements for changing the temperature and humidity, including those machines in which the humidity cannot be separately regulated.
8415.20	Proposed code for air conditioning of a kind used for persons, in motor vehicles.
8415.10.00	A/C window or wall types, self-contained.
8415.81.00	Other, except parts, incorporating a refrigerating unit and a valve for reversal of the cooling/heat cycle.
8415.82.00	Other, incorporating a refrigerating unit—
	Self-contained machines and remote condenser type air conditioners (not for year-round use).
	Year-round units (for heating and cooling).
	Air Conditioning evaporator coils.
	Dehumidifiers.
	Other air conditioning machines incorporating a refrigerating unit.
8415.83	Automotive air conditioners.

Heading/Subheading	*Article Description*
8418	Refrigerators, freezers and other refrigerating or freezing equipment, electric or other; heat pumps, other than air conditioning machines of heading 8415; parts thereof.
8418.10.00	Combined refrigerator-freezers, fitted with separate external doors.
8418.21.00	Refrigerators, household type, Compression type.
8418.22.00	Absorption type, electrical.
8418.29.00	Other.
8418.30.00	Freezers of the chest type.
8418.40	Freezers of the upright type.
8418.50.0040	Other refrigerating or freezing chests, cabinets, display counters, showcases and similar refrigerating or freezing furniture.
8418.61.00	Other refrigerating or freezing equipment; heat pumps.
8418.69	Other—
	Icemaking machines.
	Drinking water coolers, self-contained.
	Soda fountain and beer dispensing equipment.
	Centrifugal liquid chilling refrigerating units.
	Absorption liquid chilling units.
	Reciprocating liquid chilling units.
	Other refrigerating or freezing equipment (household or other).
8479.89.10	Dehumidifiers (other than those under 8415 or 8424 classified as ''machines and mechanical appliances having individual functions, not specified or included elsewhere'').

CATEGORY 3. AEROSOL PRODUCTS

An array of different products use controlled substances as aerosols and in aerosol applications. Not all aerosol applications use controlled substances, however. The codes given below represent the most likely classifications for products containing controlled substances. The product codes listed include ****:

- varnishes
- perfumes
- preparations for use on hair
- preparations for oral and dental hygiene
- shaving preparations
- personal deodorants, bath preparations
- prepared room deodorizers
- soaps
- lubricants
- polishes and creams
- explosives
- insecticides, fungicides, herbicides, disinfectants
- arms and ammunition
- household products such as footwear or leather polishes
- other miscellaneous products

Heading/Subheading	*Article Description*
3208	Paints and varnishes ***** (including enamels and lacquers) based on synthetic polymers of chemically modified natural polymers, dispersed or dissolved in a non-aqueous medium.
3208.10	Based on polyesters.
3208.20	Based on acrylic or vinyl polymers.
3208.90	Other.

**** Other categories of products that may contain controlled substances are listed below. EPA is currently working to match them with appropriate codes. They include: coatings and electronic equipment (e.g., electrical motors), coatings or cleaning fluids for aircraft maintenance, mold release agents (e.g. for production of plastic or elastomeric materials), water and oil repellant (potentially under HS 3402), spray undercoats (potentially under ''paints and varnishes''), spot removers, brake cleaners, safety sprays (e.g., mace cans), animal repellant, noise horns (e.g., for use on boats), weld inspection developers, freezants, gum removers, intruder alarms, tire inflators, dusters (for electronic and non-electronic applications), spray shoe polish, and suede protectors.

Heading/Subheading	*Article Description*
3209	Paints and varnishes (including enamels and lacquers) based on synthetic polymers or chemically modified natural polymers, dispersed or dissolved in an aqueous medium.
3209.10	Based on acrylic or vinyl polymers.
3209.90	Other.
3210.00	Other paints and varnishes (including enamels, lacquers and distempers) and prepared water pigments of a kind used for finishing leather.
3212.90	Dyes and other coloring matter put up in forms or packings for retail sale.
3303.00	Perfumes and toilet waters.
3304.30	Manicure or pedicure preparations.
3305.10	Shampoos.
3305.20	Preparations for permanent waving or straightening.
3305.30	Hair lacquers.
3305.90	Other hair preparations.
3306.10	Dentrifices.
3306.90	Other dental (this may include breath sprays).
3307.10	Pre-shave, shaving or after-shave preparations.
3307.20	Personal deodorants and antiperspirants.
3307.30	Perfumed bath salts and other bath preparations.
3307.49	Other (this may include preparations for perfuming or deodorizing rooms, including odoriferous preparations used during religious rites, whether or not perfumed or having disinfectant properties).
3307.90	Other (this may include depilatory products and other perfumery, cosmetic or toilet preparations, not elsewhere specified or included)
3403	Lubricating preparations (including cutting-oil preparations, bolt or nut release preparations, anti-rust or anti-corrosion preparations and mould release preparations, based on lubricants), and preparations of a kind used for the oil or grease treatment of textile materials, leather, fur skins or other materials, but excluding preparations containing, as basic constituents, 70 percent or more by weight of petroleum oils or of oils obtained from bituminous minerals.
3402	Organic surface-active agents (other than soap); surface-active preparations, washing preparations and cleaning operations, whether or not containing soap, other than those of 3401.
3402.20	Preparations put up for retail sale.
3402.19	Other preparations containing petroleum oils or oils obtained from bituminous minerals.
3403	Lubricating preparations consisting of mixtures containing silicone greases or oils, as the case may be.
2710.00	Preparations not elsewhere specified or included, containing by weight 70 percent or more of petroleum oils or of oils obtained from bituminous minerals, these oils being the basic constituents of the preparations.
3403.11	Lubricants containing petroleum oils or oils obtained from bituminous minerals used for preparations from the treatment of textile materials, leather, fur skins or other materials.
3403.19	Other preparations containing petroleum oils or oils obtained from bituminous minerals.
3405	Polishes and creams, for footwear, furniture, floors, coachwork, glass or metal, scouring pastes and powders and similar preparations excluding waxes of heading 3404.
3405.10	Polishes and creams for footwear or leather.
3405.20	Polishes for wooden furniture, floors or other woodwork.
36	Explosives.

Heading/Subheading	*Article Description*
3808	Insecticides, rodenticides, fungicides, herbicides, anti-sprouting products and plant-growth regulators, disinfectants and similar products, put up in forms or packings for retail sale or as preparations or articles (for example, sulphur-treated bands, wicks and candles, and fly papers).
3808.10	Insecticides.
3808.20	Fungicides.
3808.30	Herbicides, anti-sprouting products and plant growth regulators.
3808.40	Disinfectants.
3808.90	Other insecticides, fungicides.
3809.10	Finishing agents, dye carriers to accelerate the dyeing or fixing of dye-stuffs and other products and preparations (for example, dressings and mordants) of a kind used in the textile, paper, leather or like industries, not elsewhere specified or included, with a basis of amylaceous substances.
3814	Organic composite solvents and thinners (not elsewhere specified or included) and the prepared paint or varnish removers.
3910	Silicones in primary forms.
9304	Other arms (for example, spring, air or gas guns and pistols, truncheons), excluding those of heading No. 93.07. Thus, aerosol spray cans containing tear gas may be classified under this subheading.
0404.90	Products consisting of natural milk constituents, whether or not containing added sugar or other sweetening matter, not elsewhere specified or included.
1517.90	Edible mixtures or preparations of animal or vegetable fats or oils or of fractions of different fats or oils of this chapter, other than edible fats or oils or their fractions of heading No. 15.16.
2106.90	Food preparations not elsewhere specified or included.

***** Although paints do not generally use contain controlled substances, some varnishes use CFC 113 and 1,1,1,trichlorethane as solvents.

CATEGORY 4. PORTABLE FIRE EXTINGUISHERS

Heading/Subheading	*Article Description*
8424	Mechanical appliances (whether or not hand operated) for projecting, dispersing, or spraying liquids or powders; fire extinguishers whether or not charged, spray guns and similar appliances; steam or sand blasting machines and similar jet projecting machines.
8424.10	Fire extinguishers, whether or not charged.

CATEGORY 5. INSULATION BOARDS, PANELS AND PIPE COVERS

These goods have to be classified according to their composition and presentation. For example, if the insulation materials are made of polyurethane, polystyrene, polyolefin and phenolic plastics, then they may be classified Chapter 39, for ''Plastics

and articles thereof''. The exact description of the products at issue is necessary before a classification can be given. ******

Heading/Subheading	*Article Description*
3917.21 to 3917.39	Tubes, pipes and hoses of plastics.
3920.10 to 3920.99	Plates, sheets, film, foil and strip made of plastics, non-cellular and not reinforced, laminated, supported or similarly combined with other materials.
3921.11 to 3921.90	Other plates, sheets, film, foil and strip, made of plastics.
3925.90	Builders' ware made of plastics, not elsewhere specified or included.
3926.90	Articles made of plastics, not elsewhere specified or included.

CATEGORY 6. PRE-POLYMERS

According to the Explanatory Notes to the Harmonized Commodity Description and Coding System, ''prepolymers are products which are characterized by some repetition of monomer units although they may contain unreacted monomers. Prepolymers are not normally used as such but are intended to be transformed into higher molecular weight polymers by further polymerization. Therefore the term does not cover finished products, such as di-isobutylenes or mixed polyethylene glycols with very low molecular weight. Examples are epoxides based with epichlorohydrin, and polymeric isocyanates.''

Heading/Subheading	*Article Description*
3901	Pre-polymers based on ethylene (in primary forms).
3902	Pre-polymers based on propylene or other olefins (in primary forms).
3903, 3907, 3909	Pre-polymers based on styrene (in primary forms), epoxide and phenols.

APPENDIX E TO SUBPART A OF PART 82—ARTICLE 5 PARTIES

Parties operating under Article 5 of the Montreal Protocol as of March 26, 2014 are listed below. An updated list can be located at: *http://ozone.unep.org/new_site/en/parties_under_article5_para1.php.*

Afghanistan, Albania, Algeria, Angola, Antigua & Barbuda, Argentina, Armenia, Bahamas, Bahrain, Bangladesh, Barbados, Belize, Benin, Bhutan, Bolivia (Plurinational State of), Bosnia and Herzegovina, Botswana, Brazil, Brunei Darussalam, Burkina Faso, Burundi, Cambodia, Cameroon, Cape Verde, Central African Republic, Chad, Chile, China, Colombia, Comoros, Congo, Congo (Democratic Republic of), Cook Islands, Cost Rica, Côte d'Ivoire, Cuba, Djibouti, Dominica, Dominican Republic, Ecuador, Egypt, El Salvador, Equatorial Guinea, Eritrea, Ethiopia, Fiji, Gabon, Gambia, Georgia, Ghana, Grenada, Guatemala, Guinea, Guinea Bissau, Guyana, Haiti, Honduras, India, Indonesia, Iran (Islamic Republic of), Iraq, Jamaica, Jordan, Kenya, Kiribati, Korea (Democratic People's Republic of), Korea (Republic of), Kuwait, Kyrgyzstan, Lao (People's Democratic Republic), Lebanon, Lesotho, Liberia, Libya, Madagascar, Malawi, Malaysia, Maldives, Mali, Marshall Islands Mauritania, Mauritius, Mexico, Micronesia (Federal States of), Moldova (Republic of), Mongolia, Montenegro, Morocco, Mozambique, Myanmar, Namibia, Nauru, Nepal, Nicaragua, Niger, Nigeria, Niue, Oman, Pakistan, Palau, Panama, Papua New Guinea, Paraguay, Peru, Philippines, Qatar, Rwanda, Saint Kitts and Nevis, Saint Lucia, Saint Vincent & the Grenadines, Samoa, Sao Tome and Principe, Saudi Arabia, Senegal, Serbia, Seychelles, Sierra Leone, Singapore, Solomon Islands, Somalia, South Africa, South Sudan*, Sri Lanka, Sudan, Suriname, Swaziland, Syrian Arab Republic, Tanzania (United Republic of), Thailand, The Former Yugoslav Republic of Macedonia, Timor-Leste, Togo, Tonga, Trinidad and Tobago, Tunisia, Turkey, Turkmenistan, Tuvalu, Uganda, United Arab Emirates, Uruguay,

****** This category may include insulating board for building panels and windows and doors. It also includes rigid appliance insulation for pipes, tanks, trucks, trailers, containers, train cars & ships, refrigerators, freezers, beverage vending machines, bulk beverage dispensers, water coolers and heaters and ice machines.

Vanuatu, Venezuela (Bolivarian Republic of), Viet Nam, Yemen, Zambia, Zimbabwe.

*temporarily categorized as Article 5 pending submission of ODS consumption data

[79 FR 16687, Mar. 26, 2014]

APPENDIX F TO SUBPART A OF PART 82—LISTING OF OZONE-DEPLETING CHEMICALS

Controlled substance	ODP	AT L	CLP	BLP
A. Class I:				
1. Group I:				
$CFCl_3$-Trichlorofluoromethane (CFC-11)	1.0	60.0	1.0	0.00
CF_2 Cl_2-Dichlorodifluoromethane (CFC-12)	1.0	120.0	1.5	0.00
C_2 F_3 Cl_3-Trichlorotrifluoroethane (CFC-113)	0.8	90.0	1.11	0.00
C_2 F_4 Cl_2-Dichlorotetrafluoroethane (CFC-114)	1.0	200.00	1.8	0.00
C_2 F_5 Cl-Monochloropentafluoroethane (CFC-115)	0.6	400.0	2.0	0.00
All isomers of the above chemicals		[Reserved]		
2. Group II:				
CF_2 ClBr-Bromochlorodifluoromethane (Halon-1211)	3.0	12	0.06	0.13
	.....	−18	−.08	−.03
CF_3 Br-Bromotrifluoromethane (Halon-1301)	10.0	72	0.00	1.00
	.....	−107		
C_2 F_4 Br_2-Dibromotetrafluoroethane (Halon-2402)	6.0	23	0.00	0.30
	.....	−28	.....	−.37
All isomers of the above chemicals		[Reserved]		
3. Group III:				
CF_3 Cl-Chlorotrifluoromethane (CFC-13)	1.0	120	0.88	0.00
	−250	−1.83		
C_2 FCl_5- (CFC-111)	1.0	60	1.04	0.00
	−90	−1.56		
C_2 F_2 Cl_4- (CFC-112)	1.0	60	0.90	0.00
	−90	−1.35		
C_3 FCl_7- (CFC-211)	1.0	100	1.76	0.00
	−500	−8.81		
C_3 F_2 Cl_6- (CFC-212)	1.0	100	1.60	0.00
	−500	−7.98		
C_3 F_3 Cl_5- (CFC-213)	1.0	100	1.41	0.00
	−500	−7.06		
C_3 F_4 Cl_4- (CFC-214)	1.0	100	1.20	0.00
	−500	−6.01		
C_3 F_5 Cl_3 -(CFC-215)	1.0	100	0.96	0.00
	−500	−4.82		
C_3 F_6 Cl_2- (CFC-216)	1.0	100	0.69	0.00
	−500	−3.45		
C_3 F_7 Cl- (CFC-217)	1.0	100	0.37	0.00
	−500	−1.87		
All isomers of the above chemicals		[Reserved]		
4. Group IV:				
CCl_4 -Carbon Tetrachloride	1.1	50.0	1.0	0.00
5. Group V:				
C_2 H_3 Cl_3-1,1,1 Trichloroethane (Methyl chloroform)	0.1	6.3	0.11	0.00
All isomers of the above chemical except 1,1,2-trichloroethane		[Reserved]		
6. Group VI:				
CH3Br-Bromomethane (Methyl Bromide)	0.7	.....	[Reserved]	
7. Group VII:				
$CHFBr_2$-	1.00	.....	[Reserved]	
CHF_2Br-(HBFC–22B1)	0.74	.....	[Reserved]	
CH_2FBr	0.73	.....	[Reserved]	
C_2HFBr_4	0.3–0.8	.....	[Reserved]	
$C_2HF_2Br_3$	0.5–1.8	.....	[Reserved]	
$C_2HF_3Br_2$	0.4–16	.....	[Reserved]	
C_2HF_4Br	0.7–1.2	.....	[Reserved]	
$C_2H_2FBr_3$	0.1–1.1	.....	[Reserved]	
$C_2H_2F_2Br_2$	0.2–1.5	.....	[Reserved]	
$C_2H_2F_3Br$	0.7–1.6	.....	[Reserved]	
$C_2H_3FBr_2$	0.1–1.7	.....	[Reserved]	
$C_2H_3F_2Br$	0.2–1.1	.....	[Reserved]	
C_2H_4FBr	0.07–0.1	.....	[Reserved]	
C_3HFBr_6	0.3–1.5	.....	[Reserved]	
$C_3HF_2Br_5$	0.2–1.9	.....	[Reserved]	

Controlled substance	ODP	AT L	CLP	BLP
$C_3HF_3Br_4$	0.3–1.8		[Reserved]	
$C_3HF_4Br_3$	0.5–2.2		[Reserved]	
$C_3HF_5Br_2$	0.9–2.0		[Reserved]	
C_3HF_6Br	0.7–3.3		[Reserved]	
$C_3H_2FBr_5$	0.1–1.9		[Reserved]	
$C_3H_2F_2Br_4$	0.2–2.1		[Reserved]	
$C_3H_2F_3Br_3$	0.2–5.6		[Reserved]	
$C_3H_2F_4Br_2$	0.3–7.5		[Reserved]	
$C_3H_2F_5Br$	0.9–1.4		[Reserved]	
$C_3H_3FBR_4$	0.08–1.9		[Reserved]	
$C_3H_3F_2Br_3$	0.1–3.1		[Reserved]	
$C_3H_3F_3Br_2$	0.1–2.5		[Reserved]	
$C_3H_3F_4Br$	0.3–4.4		[Reserved]	
$C_3H_4FBr_3$	0.03–0.3		[Reserved]	
$C_3H_4F_2Br_2$	0.1–1.0		[Reserved]	
$C_3H_4F_3Br$	0.07–0.8		[Reserved]	
$C_3H_5FBr_2$	0.04–0.4		[Reserved]	
$C_3H_5F_2Br$	0.07–0.8		[Reserved]	
C_3H_6FB	0.02–0.7		[Reserved]	
8. Group VIII:				
CH_2BrCl (Chlorobromomethane)	0.12		[Reserved]	
B. Class II:				
$CHFCl_2$-Dichlorofluoromethane (HCFC-21)	[Reserved]	2.1	0.03	0.00
CHF_2 Cl-Chlorodifluoromethane (HCFC-22)	0.05	15.3	0.14	0.00
CH_2 FCl-Chlorofluoromethane (HCFC-31)	[Reserved]	1.44	0.02	0.00
C_2 $HFCl_4$- (HCFC-121)	[Reserved]	0.6	0.01	0.00
C_2 HF_2 Cl_3- (HCFC-122)	[Reserved]	1.4	0.02	0.00
C_2 HF_3 Cl_2- (HCFC-123)	0.02	1.6	0.016	0.00
C_2 HF_4 Cl- (HCFC-124)	0.02	6.6	0.04	0.00
C_2 H_2 FCl_3- (HCFC-131)	[Reserved]	4.0	0.06	0.00
C_2 H_2 F_2 Cl_2- (HCFC-132b)	[Reserved]	4.2	0.05	0.00
C_2 H_2 F_3 Cl- (HCFC-133a)	[Reserved]	4.8	0.03	0.00
C_2 H_3 FCl_2- (HCFC-141b)	0.12	7.8	0.10	0.00
C_2 H_3 F_2 Cl- (HCFC-142b)	0.06	19.1	0.14	0.00
C_3 $HFCl_6$- (HCFC-221)	[Reserved]			0.00
C_3 HF_2 Cl_5- (HCFC-222)	[Reserved]			0.00
C_3 HF_3 Cl_4- (HCFC-223)	[Reserved]			0.00
C_3 HF_4 Cl_3- (HCFC-224)	[Reserved]			0.00
C_3 HF_5 Cl_2- (HCFC-225ca)	[Reserved]	1.5	0.01	0.00
		−1.7		
(HCFC-225cb)	[Reserved]	5.1	0.04	0.00
C_3 HF_6 Cl- (HCFC-226)	[Reserved]			0.00
C_3 H_2 FCl_5- (HCFC-231)	[Reserved]			0.00
C_3 H_2 F_{24}- (HCFC-232)	[Reserved]			0.00
C_3 H_2 F_3 Cl_3- (HCFC-233)	[Reserved]			0.00
C_3 H_2 F_4 Cl_2- (HCFC-234)	[Reserved]			0.00
C_3 H_2 F_5 Cl- (HCFC-235)	[Reserved]			0.00
C_3 H_3 FCl_4- (HCFC-241)	[Reserved]			0.00
C_3 H_3 F_2 Cl_3- (HCFC-242)	[Reserved]			0.00
C_3 H_3 F_3 Cl_2- (HCFC-243)	[Reserved]			0.00
C_3 H_3 F_4 Cl- (HCFC-244)	[Reserved]			0.00
C_3 H_4 FCl_3- (HCFC-251)	[Reserved]			0.00
C_3 H_4 F_2 Cl_2- (HCFC-252)	[Reserved]			0.00
C_3 H_4 F_3 Cl- (HCFC-253)	[Reserved]			0.00
C_3 H_5 FCl_2- (HCFC-261)	[Reserved]			0.00
C_2 H_5 F_2 Cl- (HCFC-262)	[Reserved]			0.00
C_3 H_6 FCl- (HCFC-271)	[Reserved]			0.00
All isomers of the above chemicals	[Reserved]			

[60 FR 24986, May 10, 1995, as amended at 68 FR 42894, July 18, 2003]

APPENDIX G TO SUBPART A OF PART 82—UNEP RECOMMENDATIONS FOR CONDITIONS APPLIED TO EXEMPTION FOR ESSENTIAL LABORATORY AND ANALYTICAL USES

1. Essential laboratory and analytical uses are identified at this time to include equipment calibration; use as extraction solvents, diluents, or carriers for chemical analysis;

biochemical research; inert solvents for chemical reactions, as a carrier or laboratory chemical and other critical analytical and laboratory purposes. Pursuant to Decision XI/15 of the Parties to the Montreal Protocol, effective January 1, 2002 the following uses of class I controlled substances are not considered essential under the global laboratory exemption:

a. Testing of oil and grease and total petroleum hydrocarbons in water;

b. Testing of tar in road-paving materials; and

c. Forensic finger printing.

Production for essential laboratory and analytical purposes is authorized provided that these laboratory and analytical chemicals shall contain only controlled substances manufactured to the following purities:

CTC (reagent grade)—99.5
1,1,1,-trichloroethane—99.5
CFC-11—99.5
CFC-13—99.5
CFC-12—99.5
CFC-113—99.5
CFC-114—99.5
Other w/ Boiling P>20 degrees C—99.5
Other w/ Boiling P<20 degrees C—99.0

d. Testing of organic matter in coal.

2. These pure, controlled substances can be subsequently mixed by manufacturers, agents or distributors with other chemicals controlled or not controlled by the Montreal Protocol as is customary for laboratory and analytical uses.

3. These high purity substances and mixtures containing controlled substances shall be supplied only in re-closable containers or high pressure cylinders smaller than three litres or in 10 millilitre or smaller glass ampoules, marked clearly as substances that deplete the ozone layer, restricted to laboratory use and analytical purposes and specifying that used or surplus substances should be collected and recycled, if practical. The material should be destroyed if recycling is not practical.

4. Parties shall annually report for each controlled substance produced: the purity; the quantity; the application, specific test standard, or procedure requiring its uses; and the status of efforts to eliminate its use in each application. Parties shall also submit copies of published instructions, standards, specifications, and regulations requiring the use of the controlled substance.

5. Pursuant to Decision XVIII/15 of the Parties to the Montreal Protocol, methyl bromide is exempted for the following approved essential laboratory and analytical purposes listed in following items (a) through (d). Use of methyl bromide for field trials is not an approved use under the global laboratory and analytical use exemption. The provisions of Appendix G, paragraphs (1), (2), (3), and (4), regarding purity, mixing, container, and reporting requirements for other exempt ODSs, also apply to the use of methyl bromide under this exemption.

a. Methyl bromide is exempted as an approved essential laboratory and analytical use as a reference or standard to calibrate equipment which uses methyl bromide, to monitor methyl bromide emission levels, or to determine methyl bromide residue levels in goods, plants and commodities;

b. Methyl bromide is exempted as an approved essential laboratory and analytical when used in laboratory toxicological studies;

c. Methyl bromide is exempted as an approved essential laboratory and analytical use to compare the efficacy of methyl bromide and its alternatives inside a laboratory; and

d. Methyl bromide is exempted as an approved essential laboratory and analytical use as a laboratory agent which is destroyed in a chemical reaction in the manner of feedstock.

[60 FR 24986, May 10, 1995, as amended at 67 FR 6362, Feb. 11, 2002; 72 FR 73269, Dec. 27, 2007]

Appendix H to Subpart A of Part 82—Clean Air Act Amendments of 1990 Phaseout Schedule for Production of Ozone-Depleting Substances

Date	Carbon tetrachloride (percent)	Methyl chloroform (percent)	Other class substances (percent)
1994	70	85	65
1995	15	70	50
1996	15	50	40
1997	15	50	15
1998	15	50	15
1999	15	50	15
2000	.....	20	
2001	.....	20	

APPENDIX I TO SUBPART A OF PART 82—GLOBAL WARMING POTENTIALS (MASS BASIS), REFERENCED TO THE ABSOLUTE GWP FOR THE ADOPTED CARBON CYCLE MODEL CO_2 DECAY RESPONSE AND FUTURE CO_2 ATMOSPHERIC CONCENTRATIONS HELD CONSTANT AT CURRENT LEVELS. (ONLY DIRECT EFFECTS ARE CONSIDERED.)

Species (chemical)	Chemical formula	Global warming potential (time horizon)		
		20 years	100 years	500 years
CFC-11	$CFCl_3$	5000	4000	1400
CFC-12	$CF_2 Cl_2$	7900	8500	4200
CFC-13	$CClF_3$	8100	11700	13600
CFC-113	$C_2 F_3 Cl_3$	5000	5000	2300
CFC-114	$C_2 F_4 Cl_2$	6900	9300	8300
CFC-115	$C_2 F_5 Cl$	6200	9300	13000
H–1301	$CF_3 Br$	6200	5600	2200
Carbon Tet	CCl_4	2000	1400	500
Methyl Chl	$CH_3 CCl_3$	360	110	35
HCFC-22	$CF_2 HCl$	4300	1700	520
HCFC-141b	$C_2 FH_3 Cl_2$	1800	630	200
HCFC-142b	$C_2 F_2 H_3 Cl$	4200	2000	630
HCFC-123	$C_2 F_3 HCl_2$	300	93	29
HCFC-124	$C_2 F_4 HCl$	1500	480	150
HCFC-225ca	$C_3 F_5 HCl_2$	550	170	52
HCFC-225cb	$C_3 F_5 HCl_2$	1700	530	170

AUnited Nations Environment Programme (UNEP), February 1995, Scientific Assessment of Ozone Depletion: 1994, Chapter 13, ''Ozone Depleting Potentials, Global Warming Potentials and Future Chlorine/Bromine Loading,'' and do not reflect review of scientific documents published after that date.

[61 FR 1285, Jan. 19, 1996]

APPENDIX J TO SUBPART A OF PART 82—PARTIES TO THE MONTREAL PROTOCOL CLASSIED UNDER ARTICLE 5(1) THAT HAVE BANNED THE IMPORT OF CONTROLLED PRODUCTS THAT RELY ON CLASS I CONTROLLED SUBSTANCES FOR THEIR CONTINUING FUNCTIONING [RESERVED]

APPENDIX K TO SUBPART A OF PART 82—COMMODITY CODES FROM THE HARMONIZED TARIFF SCHEDULE FOR CONTROLLED SUBSTANCES AND USED CONTROLLED SUBSTANCES

Description of commodity or chemical	Commodity code from harmonized tariff schedule
Class II:	
HCFC–22 (Chlorodifluoromethane)	2903.71.0000
HCFC–123 (Dichlorotrifluoroethane)	2903.72.0020
HCFC–124 (Monochlorotetrafluoroethane)	2903.79.1000
HCFC–141b (Dichlorofluoroethane)	2903.73.0000
HCFC–142b (Chlorodifluoroethane)	2903.74.0000
HCFC–225ca, HCFC–225cb (Dichloropentafluoropropanes)	2903.75.0000
HCFC–21, HCFC–31, HCFC–133, and other HCFCs	2903.79.9070
HCFC Mixtures (R–401A, R–402A, etc.)	3824.74.0000
Class I:	
CFC–11 (Trichlorofluoromethane)	2903.77.0010
CFC–12 (Dichlorodifluoromethane)	2903.77.0050
CFC–113 (Trichlorotrifluoroethane)	2903.77.0020
CFC–114 (Dichlorotetrafluoroethane)	2903.77.0030
CFC–115 (Monochloropentafluoroethane)	2903.77.0040
CFC–13, CFC–111, CFC–112, CFC–211, CFC–212, CFC–213, CFC–214, CFC–215, CFC–216, CFC–217, and other CFCs	2903.77.0080
CFC Mixtures (R–500, R–502, etc.)	3824.71.0100
Carbon Tetrachloride	2903.14.0000
Halon 1301 (Bromotrifluoromethane)	2903.76.0010
Halon, other	2903.76.0050
Methyl Bromide	2903.39.1520
Methyl Chloroform	2903.19.6010

[85 FR 15299, Mar. 17, 2020]

APPENDIX L TO SUBPART A OF PART 82—APPROVED CRITICAL USES AND LIMITING CRITICAL CONDITIONS FOR THOSE USES

Column A	Column B	Column C
Approved Critical Uses.	Approved Critical User, Location of Use	Limiting Critical Conditions that exist, or that the approved critical user reasonably expects could arise without methyl bromide fumigation:
PRE–PLANT USES		
Strawberry Fruit	California growers in 2015 and 2016.	Moderate to severe black root rot or crown rot Moderate to severe yellow or purple nutsedge infestation Moderate to severe nematode infestation Local township limits prohibiting 1,3-dichloropropene
POST–HARVEST USES		
Dry Cured Pork Products.	Members of the National Country Ham Association and the American Association of Meat Processors, Nahunta Pork Center (North Carolina), and Gwaltney of Smithfield Inc..	Red legged ham beetle infestation Cheese/ham skipper infestation Dermestid beetle infestation Ham mite infestation

[80 FR 61992, Oct. 15, 2015]

Subpart B—Servicing of Motor Vehicle Air Conditioners

SOURCE: 57 FR 31261, July 14, 1992, unless otherwise noted.

§ 82.30 Purpose and scope.

(a) The purpose of the regulations in this subpart B is to implement section 609 of the Clean Air Act, as amended (Act) regarding the servicing of motor vehicle air conditioners (MVACs), and to implement section 608 of the Act regarding certain servicing, maintenance, repair and disposal of air conditioners in MVACs and MVAC-like appliances (as that term is defined in 40 CFR 82.152).

(b) These regulations apply to any person performing service on a motor vehicle for consideration when this service involves the refrigerant in the motor vehicle air conditioner.

[57 FR 31261, July 14, 1992, as amended at 62 FR 68046, Dec. 30, 1997]

§ 82.32 Definitions.

(a) *Approved independent standards testing organization* means any organization which has applied for and received approval from the Administrator pursuant to § 82.38.

(b) *Approved refrigerant recycling equipment* means equipment certified by the Administrator or an organization approved under § 82.38 as meeting either one of the standards in § 82.36. Such equipment extracts and recycles refrigerant or extracts refrigerant for recycling on-site or reclamation off-site.

(c) *Motor vehicle* as used in this subpart means any vehicle which is self-propelled and designed for transporting persons or property on a street or highway, including but not limited to passenger cars, light duty vehicles, and heavy duty vehicles. This definition does not include a vehicle where final assembly of the vehicle has not been completed by the original equipment manufacturer.

(d) *Motor vehicle air conditioners* means mechanical vapor compression refrigeration equipment used to cool the driver's or passenger's compartment of any motor vehicle. This definition is not intended to encompass the hermetically sealed refrigeration systems used on motor vehicles for refrigerated cargo and the air conditioning systems on passenger buses using HCFC-22 refrigerant.

(e) *Properly using*. (1) Properly using means using equipment in conformity with the regulations set forth in this subpart, including but not limited to the prohibitions and required practices

set forth in § 82.34, and the recommended service procedures and practices for the containment of refrigerant set forth in appendices A, B, C, D, E, and F of this subpart, as applicable. In addition, this term includes operating the equipment in accordance with the manufacturer's guide to operation and maintenance and using the equipment only for the controlled substance for which the machine is designed. For equipment that extracts and recycles refrigerant, properly using also means to recycle refrigerant before it is returned to a motor vehicle air conditioner or MVAC-like appliance, including to the motor vehicle air conditioner or MVAC-like appliance from which the refrigerant was extracted. For equipment that only recovers refrigerant, properly using includes the requirement to recycle the refrigerant on-site or send the refrigerant off-site for reclamation.

(2) Refrigerant from reclamation facilities that is used for the purpose of recharging motor vehicle air conditioners must be at or above the standard of purity developed by the Air-conditioning and Refrigeration Institute (ARI 700–93) (which is codified at 40 CFR part 82, subpart F, appendix A, and is available at 4301 North Fairfax Drive, Suite 425, Arlington, Virginia 22203). Refrigerant may be recycled off-site only if the refrigerant is extracted using recover only equipment, and is subsequently recycled off-site by equipment owned by the person that owns both the recover only equipment and owns or operates the establishment at which the refrigerant was extracted. In any event, approved equipment must be used to extract refrigerant prior to performing any service during which discharge of refrigerant from the motor vehicle air conditioner can reasonably be expected. Intentionally venting or disposing of refrigerant to the atmosphere is an improper use of equipment.

(3) Notwithstanding any other terms of this paragraph (e), approved refrigerant recycling equipment may be transported off-site and used to perform service involving refrigerant at other locations where such servicing occurs. Any such servicing involving refrigerant must meet all of the requirements of this subpart B that would apply if the servicing occurred on-site.

(4) Facilities that charge MVACs or MVAC-like appliances with refrigerant but do not perform any other service involving refrigerant (*i.e.,* perform ''top-offs'' only) are considered to be engaged in ''service involving refrigerant'' and are therefore subject to any and all requirements of this subsection that apply to facilities that perform a wider range of refrigerant servicing. For facilities that charge MVACs, this includes the requirement to purchase approved refrigerant recycling equipment. For facilities that only charge MVAC-like appliances, this does not include the requirement to purchase approved refrigerant recycling equipment, but does include the requirement to be properly trained and certified by a technician certification program approved by the Administrator pursuant to either § 82.40 or § 82.161(a)(5).

(5) All persons opening (as that term is defined in § 82.152) MVAC-like appliances must have at least one piece of approved recovery or recycling equipment available at their place of business.

(f) *Refrigerant* means any class I or class II substance used in a motor vehicle air conditioner. Class I and class II substances are listed in part 82, subpart A, appendix A. Effective November 15, 1995, refrigerant shall also include any substitute substance.

(g) *Service for consideration* means being paid to perform service, whether it is in cash, credit, goods, or services. This includes all service except that done for free.

(h) *Service involving refrigerant* means any service during which discharge or release of refrigerant from the MVAC or MVAC-like appliance to the atmosphere can reasonably be expected to occur. Service involving refrigerant includes any service in which an MVAC or MVAC-like appliance is charged with refrigerant but no other service involving refrigerant is performed (*i.e.*, a ''top-off'').

(i) *Motor vehicle disposal facility* means any commercial facility that engages in the disposal (which includes dismantling, crushing or recycling) of MVACs or MVAC-like appliances, including but not limited to automotive

recycling facilities, scrap yards, landfills and salvage yards engaged in such operations. Motor vehicle repair and/or servicing facilities, including collision repair facilities, are not considered motor vehicle disposal facilities.

[57 FR 31261, July 14, 1992, as amended at 60 FR 21687, May 2, 1995; 62 FR 68046, Dec. 30, 1997]

§ 82.34 Prohibitions and required practices.

(a) No person repairing or servicing MVACs for consideration, and no person repairing or servicing MVAC-like appliances, may perform any service involving the refrigerant for such MVAC or MVAC-like appliance:

(1) Without properly using equipment approved pursuant to § 82.36;

(2) Unless any such person repairing or servicing an MVAC has been properly trained and certified by a technician certification program approved by the Administrator pursuant to § 82.40; and

(3) Unless any such person repairing or servicing an MVAC-like appliance has been properly trained and certified by a technician certification program approved by the Administrator pursuant to either § 82.40 or § 82.161(a)(5).

(b) Effective November 15, 1992, no person may sell or distribute, or offer for sale or distribution, any class I or class II substance that is suitable for use as a refrigerant in motor vehicle air-conditioner and that is in a container which contains less than 20 pounds of such refrigerant to any person unless that person is properly trained and certified under § 82.40 or intended the containers for resale only, and so certifies to the seller under § 82.42(b)(3).

(c) No technician training programs may issue certificates unless the program complies with all of the standards in § 82.40(a).

(d) *Motor vehicle disposal facilities.* (1) Any refrigerant that is extracted from an MVAC or an MVAC-like appliance (as that term is defined in § 82.152) bound for disposal and located at a motor vehicle disposal facility may not be subsequently used to charge or recharge an MVAC or MVAC-like appliance, unless, prior to such charging or recharging, the refrigerant is either:

(i) Recovered, and reclaimed in accordance with the regulations promulgated under § 82.32(e)(2) of this subpart B; or

(ii) (A) Recovered using approved refrigerant recycling equipment dedicated for use with MVACs and MVAC-like appliances, either by a technician certified under paragraph (a)(2) of this section, or by an employee, owner, or operator of, or contractor to, the disposal facility; and

(B) Subsequently recycled by the facility that charges or recharges the refrigerant into an MVAC or MVAC-like appliance, properly using approved refrigerant recycling equipment in accordance with any applicable recommended service procedures set forth in the appendices to this subpart B.

(2) Any refrigerant the sale of which is restricted under subpart F that is extracted from an MVAC or an MVAC-like appliance bound for disposal and located at a motor vehicle disposal facility but not subsequently reclaimed in accordance with the regulations promulgated under subpart F, may be sold prior to its subsequent re-use only to a technician certified under paragraph (a)(2) of this section. Any technician certified under paragraph (a)(2) of this section who obtains such a refrigerant may subsequently re-use such refrigerant only in an MVAC or MVAC-like appliance, and only if it has been reclaimed or properly recycled.

(e) Refrigerant handling equipment manufactured or imported for use during the maintenance, service or repair of MVACs for consideration cannot be introduced into interstate commerce unless meeting the requirements of § 82.36.

[57 FR 31261, July 14, 1992, as amended at 62 FR 68047, Dec. 30, 1997; 72 FR 63494, Nov. 9, 2007]

§ 82.36 Approved refrigerant handling equipment.

(a)(1) Refrigerant recycling equipment must be certified by the Administrator or an independent standards testing organization approved by the Administrator under § 82.38 to meet the following standard:

(2) Equipment that recovers and recycles CFC-12 refrigerant must meet the standards set forth in appendix A

of this subpart (Recommended Service Procedure for the Containment of CFC-12, Extraction and Recycle Equipment for Mobile Automotive Air-Conditioning Systems, and Standard of Purity for Use in Mobile Air Conditioning Systems).

(3) Equipment that recovers but does not recycle CFC-12 refrigerant must meet the standards set forth in appendix B of this subpart (Recommended Service Procedure for the Containment of CFC-12 and Extraction Equipment for Mobile Automotive Air-Conditioning Systems).

(4) Effective January 1, 2008, equipment that recovers and recycles HFC–134a refrigerant and equipment that recovers and recycles HFC–134a refrigerant and recharges systems with HFC–134a refrigerant must meet the standards set forth in Appendix C of this subpart based upon J2788—HFC–134a (R–134a) Recovery/Recycling Equipment and Recovery/Recycling/Recharging for Mobile Air-Conditioning Systems.

(5) Effective October 31, 2008, equipment that recovers but does not recycle HFC–134a refrigerant must meet the standards set forth in Appendix D of this subpart based upon J2810—HFC–134a (R–134a) Recovery Equipment Mobile Air-Conditioning Systems.

(6) Equipment that recovers and recycles both CFC-12 and HFC-134a using common circuitry must meet the standards set forth in appendix E of this subpart (Automotive Refrigerant Recycling Equipment Intended for Use with both CFC-12 and HFC-134a, Recommended Service Procedure for the Containment of CFC-12, and Recommended Service Procedure for the Containment of HFC-134a).

(7) Equipment that recovers but does not recycle refrigerants other than HFC-134a and CFC-12 must meet the standards set forth in appendix F of this subpart (Recover-Only Equipment that Extracts a Single, Specific Refrigerant Other Than CFC-12 or HFC-134a).

(b)(1) Refrigerant recycling equipment that has not been certified under paragraph (a) of this section shall be considered approved if it is substantially identical to the applicable equipment certified under paragraph (a) of this section, and:

(i) For equipment that recovers and recycles CFC-12 refrigerant, it was initially purchased before September 4, 1991;

(ii) For equipment that recovers but does not recycle CFC-12 refrigerant, it was initially purchased before April 22, 1992;

(iii) For equipment that recovers and recycles HFC-134a refrigerant, it was initially purchased before March 6, 1996;

(iv) For equipment that recovers but does not recycle HFC-134a refrigerant, it was initially purchased before March 6, 1996;

(v) For equipment that recovers but does not recycle any single, specific refrigerant other than CFC-12 or HFC-134a, it was initially purchased before March 6, 1996; and

(vi) For equipment that recovers and recycles HFC-134a and CFC-12 refrigerant using common circuitry, it was initially purchased before March 6, 1996.

(2) Equipment manufacturers or owners may request a determination by the Administrator by submitting an application and supporting documents that indicate that the equipment is substantially identical to approved equipment to: MVACs Recycling Program Manager, Stratospheric Protection Division (6205J), U.S. Environmental Protection Agency, 1200 Pennsylvania Ave., NW., Washington, DC 20460, Attn: Substantially Identical Equipment Review. Supporting documents must include process flow sheets, lists of components and any other information that would indicate that the equipment is capable of processing the refrigerant to the standards in appendix A, B, C, D, E or F of this subpart, as applicable. Authorized representatives of the Administrator may inspect equipment for which approval is being sought and request samples of refrigerant that has been extracted and/or recycled using the equipment. Equipment that fails to meet appropriate standards will not be considered approved.

(3) Refrigerant recycling equipment that recovers or recovers and recycles CFC-12 refrigerant and has not been certified under paragraph (a) or approved under paragraphs(b)(1) and (b)(2)

of this section shall be considered approved for use with an MVAC-like appliance if it was manufactured or imported before November 15, 1993, and is capable of reducing the system pressure to 102 mm of mercury vacuum under the conditions set forth in appendix A of this subpart.

(c) The Administrator will maintain a list of approved equipment by manufacturer and model. Persons interested in obtaining a copy of the list should send written inquiries to the address in paragraph (b) of this section.

[57 FR 31261, July 14, 1992, as amended at 60 FR 21687, May 2, 1995; 62 FR 68047, Dec. 30, 1997; 72 FR 63494, Nov. 9, 2007; 73 FR 34647, June 18, 2008]

§ 82.38 Approved independent standards testing organizations.

(a) Any independent standards testing organization may apply for approval by the Administrator to certify equipment as meeting the standards in appendix A, B, C, D, E, or F of this subpart, as applicable. The application shall be sent to: MVACs Recycling Program Manager, Stratospheric Protection Division (6205J), U.S. Environmental Protection Agency, 1200 Pennsylvania Ave., NW., Washington, DC 20460.

(b) Applications for approval must document the following:

(1) That the organization has the capacity to accurately test whether refrigerant recycling equipment complies with the applicable standards. In particular, applications must document:

(i) The equipment present at the organization that will be used for equipment testing;

(ii) The expertise in equipment testing and the technical experience of the organization's personnel;

(iii) Thorough knowledge of the standards as they appear in the applicable appendices of this subpart; and

(iv) The test procedures to be used to test equipment for compliance with applicable standards, and why such test procedures are appropriate for that purpose.

(2) That the organization has no conflict of interest and will receive no financial benefit based on the outcome of certification testing; and

(3) That the organization agrees to allow the Administrator access to verify the information contained in the application.

(c) If approval is denied under this section, the Administrator shall give written notice to the organization setting forth the basis for his or her determination.

(d) If at any time an approved independent standards testing organization is found to be conducting certification tests for the purposes of this subpart in a manner not consistent with the representations made in its application for approval under this section, the Administrator reserves the right to revoke approval.

[57 FR 31261, July 14, 1992, as amended at 60 FR 21687, May 2, 1995; 62 FR 68048, Dec. 30, 1997]

§ 82.40 Technician training and certification.

(a) Any technician training and certification program may apply for approval, in accordance with the provisions of this paragraph, by submitting to the Administrator at the address in § 82.38(a) verification that the program meets all of the following standards:

(1) *Training*. Each program must provide adequate training, through one or more of the following means: on-the-job training, training through self-study of instructional material, or on-site training involving instructors, videos or a hands-on demonstration.

(2) *Test subject material*. The certification tests must adequately and sufficiently cover the following:

(i) The standards established for the service and repair of MVACs and MVAC-like appliances as set forth in appendices A, B, C, D, E, and F of this subpart. These standards relate to the recommended service procedures for the containment of refrigerant, extraction equipment, extraction and recycle equipment, and the standard of purity for refrigerant in motor vehicle air conditioners.

(ii) Anticipated future technological developments, such as the introduction of HFC-134a in new motor vehicle air conditioners.

(iii) The environmental consequences of refrigerant release and the adverse

effects of stratospheric ozone layer depletion.

(iv) As of August 13, 1992, the requirements imposed by the Administrator under section 609 of the Act.

(3) *Test administration.* Completed tests must be graded by an entity or individual who receives no benefit based on the outcome of testing; a fee may be charged for grading. Sufficient measures must be taken at the test site to ensure that tests are completed honestly by each technician. Each test must provide a means of verifying the identification of the individual taking the test. Programs are encouraged to make provisions for non-English speaking technicians by providing tests in other languages or allowing the use of a translator when taking the test. If a translator is used, the certificate received must indicate that translator assistance was required.

(4) *Proof of certification.* Each certification program must offer individual proof of certification, such as a certificate, wallet-sized card, or display card, upon successful completion of the test. Each certification program must provide a unique number for each certified technician.

(b) In deciding whether to approve an application, the Administrator will consider the extent to which the applicant has documented that its program meets the standards set forth in this section. The Administrator reserves the right to consider other factors deemed relevant to ensure the effectiveness of certification programs. The Administrator may approve a program which meets all of the standards in paragraph (a) of this section except test administration if the program, when viewed as a whole, is at least as effective as a program that does meet all the standards. Such approval shall be limited to training and certification conducted before August 13, 1992. If approval is denied under this section, the Administrator shall give written notice to the program setting forth the basis for his determination.

(c) *Technical revisions.* Directors of approved certification programs must conduct periodic reviews of test subject material and update the material based upon the latest technological developments in motor vehicle air conditioner service and repair. A written summary of the review and any changes made must be submitted to the Administrator every two years.

(d) *Recertification.* The Administrator reserves the right to specify the need for technician recertification at some future date, if necessary.

(e) If at any time an approved program is conducted in a manner not consistent with the representations made in the application for approval of the program under this section, the Administrator reserves the right to revoke approval.

(f) Authorized representatives of the Administrator may require technicians to demonstrate on the business entity's premises their ability to perform proper procedures for recovering and/or recycling refrigerant. Failure to demonstrate or failure to properly use the equipment may result in revocation of the technician's certificate by the Administrator. Technicians whose certification is revoked must be recertified before servicing or repairing any motor vehicle air conditioners.

[57 FR 31261, July 14, 1992, as amended at 60 FR 21688, May 2, 1995; 62 FR 68048, Dec. 30, 1997]

§ 82.42 Certification, recordkeeping and public notification requirements.

(a) *Certification requirements.* (1) No later than January 1, 1993, any person repairing or servicing motor vehicle air conditioners for consideration shall certify to the Administrator that such person has acquired, and is properly using, approved equipment and that each individual authorized to use the equipment is properly trained and certified. Certification shall take the form of a statement signed by the owner of the equipment or another responsible officer and setting forth:

(i) The name of the purchaser of the equipment;

(ii) The address of the establishment where the equipment will be located; and

(iii) The manufacturer name and equipment model number, the date of manufacture, and the serial number of the equipment. The certification must also include a statement that the equipment will be properly used in

servicing motor vehicle air conditioners, that each individual authorized by the purchaser to perform service is properly trained and certified in accordance with § 82.40, and that the information given is true and correct.

(A) Owners or lessees of recycling or recovery equipment having their places of business in Connecticut, Maine, Massachusetts, New Hampshire, Rhode Island, and Vermont must send their certifications to: CAA section 609 Enforcement Contact; EPA Region I; Mail Code 04–2; 5 Post Office Square—Suite 100, Boston, MA 02109–3912.

(B) Owners or lessees of recycling or recovery equipment having their places of business in New York, New Jersey, Puerto Rico, Virgin Islands must send their certifications to: CAA section 609 Enforcement Contact; EPA Region II (2DECA–AC); 290 Broadway, 21st Floor; New York, NY 10007–1866.

(C) Owners or lessees of recycling or recovery equipment having their places of business in Delaware, District of Columbia, Maryland, Pennsylvania, Virginia, West Virginia must send their certifications to: CAA section 609 Enforcement Contact; EPA Region III—Wheeling Operations Office; Mail Code 3AP12; 303 Methodist Building; 11th and Chapline Streets; Wheeling, WV 26003.

(D) Owners or lessees of recycling or recovery equipment having their places of business in Alabama, Florida, Georgia, Kentucky, Mississippi, North Carolina, South Carolina, Tennessee must send their certifications to: CAA section 609 Enforcement Contact; EPA Region IV (APT–AE); Atlanta Federal Center; 61 Forsyth Street, SW.; Atlanta, GA 30303.

(E) Owners or lessees of recycling or recovery equipment having their places of business in Illinois, Indiana, Michigan, Minnesota, Ohio, Wisconsin must send their certifications to: CAA section 609 Enforcement Contact, EPA Region V (AE17J); 77 West Jackson Blvd.; Chicago, IL 60604–3507.

(F) Owners or lessees of recycling or recovery equipment having their places of business in Arkansas, Louisiana, New Mexico, Oklahoma, Texas must send their certifications to: CAA Section 609 Enforcement Contact, EPA Region 6, 1201 Elm Street, Suite 500, Mail Code 6ECDAP, Dallas, Texas 75270–2102.

(G) Owners or lessees of recycling or recovery equipment having their places of business in Iowa, Kansas, Missouri, Nebraska must send their certifications to: CAA section 609 Enforcement Contact; EPA Region 7; Mail Code APCO/APDB/ACES; 11201 Renner Boulevard, Lenexa, Kansas 66219.

(H) Owners or lessees of recycling or recovery equipment having their places of business in Colorado, Montana, North Dakota, South Dakota, Utah, Wyoming must send their certifications to: CAA section 609 Enforcement Contact, EPA Region VIII, Mail Code 8ENF–T, 999 18th Street, Suite 500, Denver, CO 80202–2466.

(I) Owners or lessees of recycling or recovery equipment having their places of business in American Samoa, Arizona, California, Guam, Hawaii, Nevada must send their certifications to: CAA section 609 Enforcement Contact; EPA Region IX; Mail Code AIR–5; 75 Hawthorne Street; San Francisco, CA 94105.

(J) Owners or lessees of recycling or recovery equipment having their places of business in Alaska, Idaho, Oregon, Washington must send their certifications to: CAA section 609 Enforcement Contact; EPA Region X (OAQ–107); 1200 Sixth Avenue; Seattle, WA 98101.

(b) *Recordkeeping requirements.* (1) Any person who owns approved refrigerant recycling equipment certified under § 82.36(a)(2) must maintain records of the name and address of any facility to which refrigerant is sent.

(2) Any person who owns approved refrigerant recycling equipment must retain records demonstrating that all persons authorized to operate the equipment are currently certified under § 82.40.

(3) Any person who sells or distributes any class I or class II substance that is suitable for use as a refrigerant in a motor vehicle air conditioner and that is in a container of less than 20 pounds of such refrigerant must verify that the purchaser is properly trained and certified under § 82.40. The seller must have a reasonable basis for believing that the information presented by the purchaser is accurate. The only exception to these requirements is if the purchaser is purchasing the small

containers for resale only. In this case, the seller must obtain a written statement from the purchaser that the containers are for resale only and indicate the purchasers name and business address. Records required under this paragraph must be retained for a period of three years.

(4) All records required to be maintained pursuant to this section must be kept for a minimum of three years unless otherwise indicated. Entities which service motor vehicle air conditioners for consideration must keep these records on-site.

(5) All entities which service motor vehicle air conditioners for consideration must allow an authorized representative of the Administrator entry onto their premises (upon presentation of his or her credentials) and give the authorized representative access to all records required to be maintained pursuant to this section.

(c) *Public notification.* Any person who conducts any retail sales of a class I or class II substance that is suitable for use as a refrigerant in a motor vehicle air conditioner, and that is in a container of less than 20 pounds of refrigerant, must prominently display a sign where sales of such containers occur which states:

''It is a violation of federal law to sell containers of Class I and Class II refrigerant of less than 20 pounds of such refrigerant to anyone who is not properly trained and certified to operate approved refrigerant recycling equipment.''

[57 FR 31261, July 14, 1992, as amended at 60 FR 21688, May 2, 1995; 72 FR 63494, Nov. 9, 2007; 76 FR 49673, Aug. 11, 2011; 78 FR 37977, June 25, 2013; 84 FR 34070, July 17, 2019; 84 FR 44230, Aug. 23, 2019]

APPENDIX A TO SUBPART B OF PART 82—STANDARD FOR RECYCLE/RECOVER EQUIPMENT

STANDARD OF PURITY FOR USE IN MOBILE AIR-CONDITIONING SYSTEMS

Foreword

Due to the CFC's damaging effect on the ozone layer, recycle of CFC-12 (R–12) used in mobile air-conditioning systems is required to reduce system venting during normal service operations. Establishing recycle specifications for R–12 will assure that system operation with recycled R–12 will provide the same level of performance as new refrigerant.

Extensive field testing with the EPA and the auto industry indicate that reuse of R–12 removed from mobile air-conditioning systems can be considered, if the refrigerant is cleaned to a specific standard. The purpose of this standard is to establish the specific minimum levels of R–12 purity required for recycled R–12 removed from mobile automotive air-conditioning systems.

1. Scope

This information applies to refrigerant used to service automobiles, light trucks, and other vehicles with similar CFC-12 systems. Systems used on mobile vehicles for refrigerated cargo that have hermetically sealed, rigid pipe are not covered in this document.

2. References

SAE J1989, Recommended Service Procedure for the Containment of R–12

SAE J1990, Extraction and Recycle Equipment for Mobile Automotive Air-Conditioning Systems

ARI Standard 700–88

3. Purity Specification

The refrigerant in this document shall have been directly removed from, and intended to be returned to, a mobile air-conditioning system. The contaminants in this recycled refrigerant 12 shall be limited to moisture, refrigerant oil, and noncondensable gases, which shall not exceed the following level:

3.1 *Moisture:* 15 ppm by weight.

3.2 *Refrigerant Oil:* 4000 ppm by weight.

3.3 *Noncondensable Gases (air):* 330 ppm by wright.

4. Refrigeration Recycle Equipment Used in Direct Mobile Air-Conditioning Service Operations Requirement

4.1 The equipment shall meet SAE J1990, which covers additional moisture, acid, and filter requirements.

4.2 The equipment shall have a label indicating that it is certified to meet this document.

5. Purity Specification of Recycled R–12 Refrigerant Supplied in Containers From Other Recycle Sources

Purity specification of recycled R–12 refrigerant supplied in containers from other recycle sources, for service of mobile air-conditioning systems, shall meet ARI Standard 700–88 (Air Conditioning and Refrigeration Institute).

6. Operation of the Recycle Equipment

This shall be done in accordance with SAE J1989.

Rationale

Not applicable.

Relationship of SAE Standard to ISO Standard

Not applicable.

Reference Section

SAE J1989, Recommended Service Procedure for the Containment of R–12
SAE J1990, Extraction and Recycle Equipment for Mobile Automotive Air-Conditioning Systems
ARI Standard 700–88

Application

This information applies to refrigerant used to service automobiles, light trucks, and other vehicles with similar CFC-12 systems. Systems used on mobile vehicles for refrigerated cargo that have hermetically sealed, rigid pipe are not covered in this document.

Committee Composition

DEVELOPED BY THE SAE DEFROST AND INTERIOR CLIMATE CONTROLS STANDARDS COMMITTEE

W.J. Atkinson, Sun Test Engineering, Paradise Valley, AZ—Chairman
J.J. Amin, Union Lake, MI
H.S. Andersson, Saab Scania, Sweden
P.E. Anglin, ITT Higbie Mfg. Co., Rochester, MI
R.W. Bishop, GMC, Lockport, NY
D. Hawks, General Motors Corporation, Pontiac, MI
J.J. Hernandez, NAVISTAR, Ft. Wayne, IN
H. Kaltner, Volkswagen AG, Germany, Federal Republic
D.F. Last, GMC, Troy, MI
D.E. Linn, Volkswagen of America, Warren, MI
J.H. McCorkel, Freightliner Corp., Charlotte, NC
C.J. McLachlan, Livonia, MI
H.L. Miner, Climate Control Inc., Decatur, IL
R.J. Niemiec, General Motors Corp., Pontiac, MI
N. Novak, Chrysler Corp., Detroit, MI
S. Oulouhojian, Mobile Air Conditioning Society, Upper Darby, PA
J. Phillips, Air International, Australia
R.H. Proctor, Murray Corp., Cockeysville, MD
G. Rolling, Behr America Inc., Ft. Worth, TX
C.D. Sweet, Signet Systems Inc., Harrodsburg, KY
J.P. Telesz, General Motors Corp., Lockport, NY

EXTRACTION AND RECYCLE EQUIPMENT FOR MOBILE AUTOMOTIVE AIR CONDITIONING SYSTEMS

SAE Recommended Practice, SAE J1990 (1991)[1]

0. Foreword

Due to the CFC's damaging effect on the ozone layer, recycle of CFC-12 (R–12) used in mobile air-conditioning systems is required to replace system venting during normal service operations. Establishing recycle specifications for R–12 will provide the same level of performance as new refrigerant.

Extensive field testing with the EPA and the auto industry indicates that R–12 can be reused, provided that it is cleaned to specifications in SAE J1991. The purpose of this document is to establish the specific minimum equipment specification required for recycle of R–12 that has been directly removed from mobile systems for reuse in mobile automotive air-conditioning systems.

1. Scope

The purpose of this document is to provide equipment specifications for CFC-12 (R–12) recycling equipment. This information applies to equipment used to service automobiles, light trucks, and other vehicles with similar CFC-12 air-conditioning systems. Systems used on mobile vehicles for refrigerated cargo that have hermetically sealed systems are not covered in this document. The equipment in this document is intended for use with refrigerant that has been directly removed from, and intended to be returned to, a mobile air-conditioning system. Should other revisions due to operational or technical requirements occur, this document may be amended.

2. References

2.1 Applicable Documents:

2.1.1 SAE Publications—Available from SAE, 400 Commonwealth Drive, Warrendale, PA 15096–0001.

SAE J1991—Standard of Purity for Use in Mobile Air-Conditioning Systems
SAE J2196—Service Hose for Automotive Air-Conditioning

[1] This standard is appropriate for equipment certified after February 1, 1992. This equipment may be marked design certified for compliance with SAE J1990 (1991). The standard for approval for equipment certified on or before February 1, 1992 is SAE J1990 (1989). This equipment may be marked design certified for compliance with SAE J1990 (1989). Both types of equipment are considered approved under the requirements of this regulation.

2.1.2 CGA Publications—Available from CGA, Crystal Gateway #1, Ste. 501, 1235 Jefferson Davis Hwy., Arlington, VA 22202

CGA Pamphlet S–1.1—Pressure Relief Device Standard Part 1—Cylinders for Compressed Gases

3. Specification and General Description

3.1 The equipment must be able to extract and process CFC-12 from mobile air-conditioning systems. The equipment shall process the contaminated R–12 samples as defined in 8.4 and shall clean the refrigerant to the level as defined in SAE J1991.

3.2 The equipment shall be suitable for use in an automotive service environment and be capable of continuous operation in ambients from 10 to 49 °C.

3.3 The equipment must be certified by Underwriters Laboratories or an equivalent certifying laboratory.

3.4 The equipment shall have a label ''Design Certified by (Company Name) to Meet SAE J1991''. The minimum letter size shall be bold type 3 mm in height.

4. Refrigeration Recycle Equipment Requirements

4.1 Moisture and Acid—The equipment shall incorporate a desiccant package that must be replaced before saturated with moisture and whose mineral acid capacity is at least 5% by weight of total system dry desiccant.

4.1.1 The equipment shall be provided with a moisture detection device that will reliably indicate when moisture in the CFC-12 exceeds the allowable level and requires the filter/dryer replacement.

4.2 Filter—The equipment shall incorporate an in-line filter that will trap particulates of 15 μm or greater.

4.3 Noncondensable Gas.

4.3.1 The equipment shall either automatically purge noncondensables (NCGs) if the acceptable level is exceeded or incorporate a device to alert the operator that NCG level has been exceeded. NCG removal must be part of normal operation of the equipment and instructions must be provided to enable the task to be accomplished within 30 minutes.

4.3.2 Refrigerant loss from noncondensable gas purging during testing described in Section 8 shall not exceed five percent (5%) by weight of the total contaminated refrigerant removed from the test system.

4.3.3 Transfer of Recycled Refrigerant—Recycled refrigerant for recharging and transfer shall be taken from the liquid phase only.

5. Safety Requirements

5.1 The equipment must comply with applicable federal, state and local requirements on equipment related to the handling of R–12 material. Safety precautions or notices related to the safe operation of the equipment shall be prominently displayed on the equipment and should also state ''Caution—Should Be Operated By Qualified Personnel''.

6. Operating Instructions

6.1 The equipment manufacturer must provide operating instructions, necessary maintenance procedures, and source information for replacement parts and repair.

6.2 The equipment must prominently display the manufacturer's name, address and any items that require maintenance or replacement that affect the proper operation of the equipment. Operation manuals must cover information for complete maintenance of the equipment to assure proper operation.

7. Functional Description

7.1 The equipment must be capable of ensuring recovery of the R–12 from the system being service, by reducing the system pressure below atmospheric to a minimum of 102 mm of mercury.

7.2 To prevent overcharge, the equipment must be equipped to protect the tank used to store the recycled refrigerant with a shutoff device and a mechanical pressure relief valve.

7.3 Portable refillable tanks or containers used in conjunction with this equipment must meet applicable Department of Transportation (DOT) or Underwriters Laboratories (UL) Standards and be adaptable to existing refrigerant service and charging equipment.

7.4 During operation, the equipment shall provide overfill protection to assure the storage container, internal or external, liquid fill does not exceed 80% of the tank's rated volume at 21.1 °C (70 °F) per DOT standards, CFR title 49, §173.304 and American Society of Mechanical Engineers.

7.4.1 Additional Storage Tank Requirements.

7.4.1.1 The cylinder valve shall comply with the standard for cylinder valves, UL 1769.

7.4.1.2 The pressure relief device shall comply with the Pressure Relief Device Standard Part 1—Cylinders for Compressed Gases, CGA Pamphlet S–1.1.

7.4.1.3 The tank assembly shall be marked to indicate the first retest date, which shall be 5 years after date of manufacture. The marking shall indicate that retest must be performed every subsequent 5 years. The marking shall be in letters at least ¼ in high.

7.5 All flexible hoses must meet SAE J2196 hose specification effective January 1, 1992.

7.6 Service hoses must have shutoff devices located within 30 cm (12 in) of the connection point to the system being serviced to

minimize introduction of noncondensable gases into the recovery equipment and the release of the refrigerant when being disconnected.

7.7 The equipment must be able to separate the lubricant from the recovered refrigerant and accurately indicate the amount removed during the process, in 30 ml units. Refrigerant dissolves in lubricant sample. This creates the illusion that more lubricant has been recovered than actually has been. The equipment lubricant measuring system must take in account such dissolved refrigerant to prevent overcharging the vehicle system with lubricant. Note: Use only new lubricant to replace the amount removed during the recycle process. Used lubricant should be discarded per applicable federal, state, and local requirements.

7.8 The equipment must be capable of continuous operation in ambient of 10 to 49 °C (50 to 120 °F).

7.9 The equipment should be compatible with leak detection material that may be present in the mobile AC system.

8. Testing

This test procedure and the requirement are used for evaluation of the equipment for its ability to clean the contaminated R–12 refrigerant.

8.1 The equipment shall clean the contaminated R–12 refrigerant to the minimum purity level as defined in SAE J1991, when tested in accordance with the following conditions:

8.2 For test validation, the equipment is to be operated according to the manufacturer's instructions.

8.3 The equipment must be preconditioned with 13.6 kg (30 lb) of the standard contaminated R–12 at an ambient of 21 °C (70 °F) before starting the test cycle. Sample amounts are not to exceed 1.13 kg (2.5 lb) with sample amounts to be repeated every 5 min. The sample method fixture, defined in Fig. 1, shall be operated at 24 °C (75 °F).

8.4 Contaminated R–12 Samples.

8.4.1 Standard contaminated R–12 refrigerant shall consist of liquid R–12 with 100 ppm (by weight) moisture at 21 °C (70 °F) and 45,000 ppm (by weight) mineral oil 525 suspension nominal and 770 ppm by weight of noncondensable gases (air).

8.4.2 High moisture contaminated sample shall consist of R–12 vapor with 1,000 ppm (by weight) moisture.

8.4.3 High oil contaminated sample shall consist of R–12 with 200,000 ppm (by weight) mineral oil 525 suspension viscosity nominal.

8.5 Test Cycle.

8.5.1 After preconditioning as stated in 8.3, the test cycle is started, processing the following contaminated samples through the equipment:

8.5.1.1 3013.6 kg (30 lb) of standard contaminated R–12.

8.5.1.2 1 kg (2.2 lb) of high oil contaminated R–12.

8.5.1.3 4.5 kg (10 lb) of standard contaminated R–12.

8.5.1.4 1 kg (2.2 lb) of high moisture contaminated R–12.

8.6 Equipment Operating Ambient.

8.6.1 The R–12 is to be cleaned to the minimum purity level, as defined in SAE J1991, with the equipment operating in a stable ambient of 10, 21, and 49 °C (50, 70, and 120 °F) and processing the samples as defined in 8.5.

8.7 Sample Analysis.

8.7.1 The processed contaminated sample shall be analyzed according to the following procedure.

8.8 Quantitative Determination of Moisture.

8.8.1 The recycled liquid phase sample of CFC-12 shall be analyzed for moisture content via Karl Fischer coulometer titration or an equivalent method. The Karl Fischer apparatus is an instrument for precise determination of small amounts of water dissolved in liquid and/or gas samples.

8.8.2 In conducting the test, a weighed sample of 30 to 130 grams is vaporized directly into the Karl Fischer analyte. A coulometer titration is conducted and the results are calculated and displayed as parts per million moisture (weight).

8.9 Determination of Percent Lubricant.

8.9.1 The amount of oil in the recycled sample of CFC-12 is to be determined by gravimetric analysis.

8.9.2 Following venting of noncondensable, in accordance with the manufacturer's operating instructions, the refrigerant container shall be shaken for 5 minutes prior to extracting samples for test.

8.9.3 A weighted sample of 175 to 225 grams of liquid CFC-12 is allowed to evaporate at room temperature. The percent oil is to be calculated from the weight of the original sample and the residue remaining after the evaporation.

8.10 Noncondensable Gas.

8.10.1 The amount of noncondensable gas is to be determined by gas chromatography. A sample of vaporized refrigerant liquid shall be separated and analyzed by gas chromatography. A Porapak Q column at 130 °C and a hot wire detector may be used for analysis.

8.10.2 This test shall be conducted on recycled refrigerant (taken from the liquid phase) within 30 minutes after the proper venting of noncondensable.

8.10.3 Samples shall be shaken for 8 hours prior to retesting while at a temperature of 24 ±2.8 °C (75 ±5 °F). Known volumes of refrigerant vapor are to be injected for separation and analysis by means of gas chromatography. A Porapak Q column at 130 °C (266 °F) and a hot wire detector are to be used for the analysis.

8.10.4 This test shall be conducted at 21 and 49 °C and may be performed in conjunction with the testing defined in Section 8.6. The equipment shall process at least 13.6 kg of standard contaminated refrigerant for this test.

8.11 Sample Requirements.

8.11.1 The sample shall be tested as defined in 8.7, 8.8, 8.9, and 8.10 at ambient temperatures of 10, 21, and 49 °C (50, 70, and 120 °F) as defined in 8.6.1.

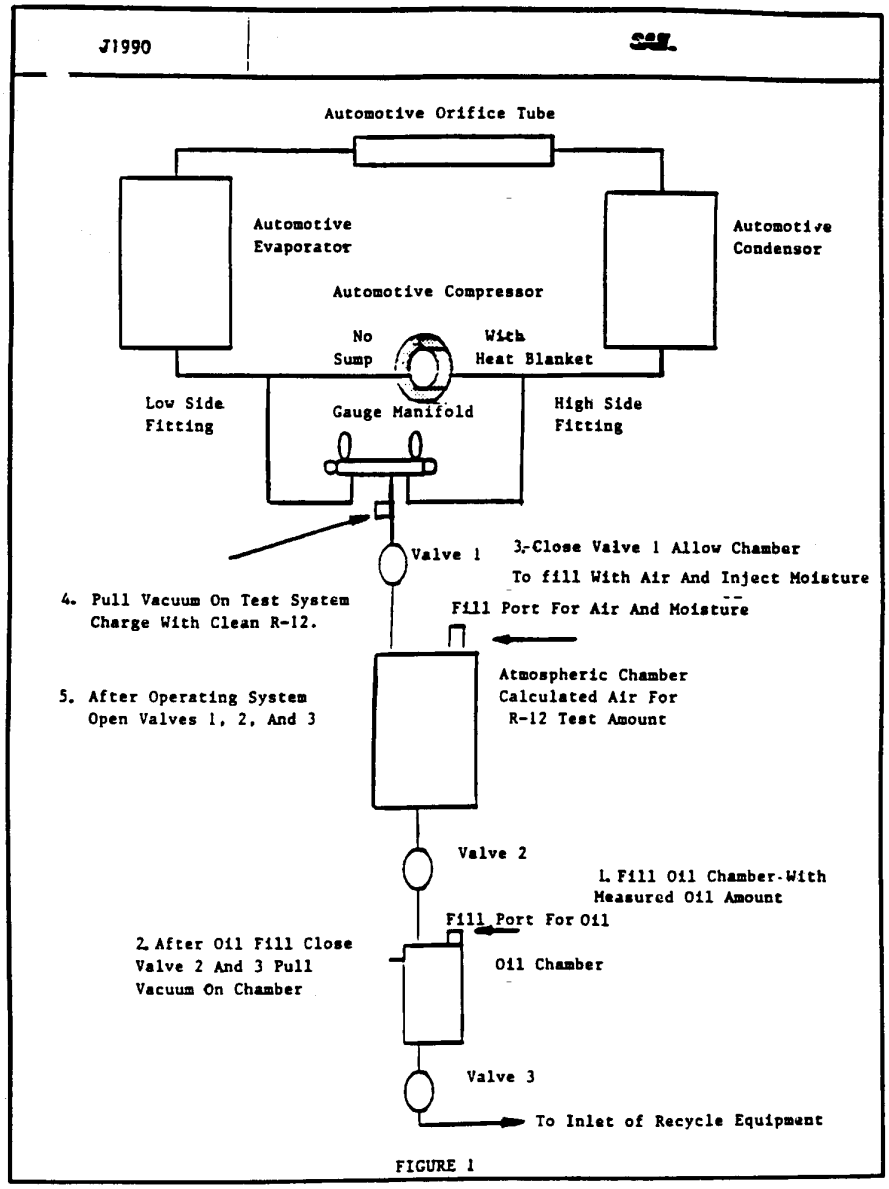

FIGURE 1

RECOMMENDED SERVICE PROCEDURE FOR THE CONTAINMENT OF R–12

1. Scope

During service of mobile air-conditioning systems, containment of the refrigerant is important. This procedure provides service guidelines for technicians when repairing vehicles and operating equipment defined in SAE J1990.

2. References

SAE J1990, Extraction and Recycle Equipment for Mobile Automotive Air-Conditioning Systems

3. Refrigerant Recovery Procedure

3. 1 Connect the recovery unit service hoses, which shall have shutoff valves within 12 in (30 cm) of the service ends, to the vehicle air-conditioning system service ports.

3.2 Operate the recovery equipment as covered by the equipment manufacturers recommended procedure.

3.2.1 Start the recovery process and remove the refrigerant from the vehicle AC system. Operate the recovery unit until the vehicle system has been reduced from a pressure to a vacuum. With the recovery unit shut off for at least 5 min, determine that there is no refrigerant remaining in the vehicle AC system. If the vehicle system has pressure, additional recovery operation is required to remove the remaining refrigerant. Repeat the operation until the vehicle AC system vacuum level remains stable for 2 min.

3.3 Close the valves in the service lines and then remove the service lines from the vehicle system. Proceed with the repair/service. If the recovery equipment has automatic closing valves, be sure they are properly operating.

4. Service With Manifold Gage Set

4.1 Service hoses must have shutoff valves in the high, low, and center service hoses within 12 in (30 cm) of the service ends. Valves must be closed prior to hose removal from the air-conditioning system. This will reduce the volume of refrigerant contained in the service hose that would otherwise be vented to atmosphere.

4.2 During all service operations, the valves should be closed until connected to the vehicle air-conditioning system or the charging source to avoid introduction of air and to contain the refrigerant rather than vent open to atmosphere.

4.3 When the manifold gage set is disconnected from the air-conditioning system or when the center hose is moved to another device which cannot accept refrigerant pressure, the gage set hoses should first be attached to the reclaim equipment to recover the refrigerant from the hoses.

5. Recycled Refrigerant Checking Procedure for Stored Portable Auxiliary Container

5.1 To determine if the recycled refrigerant container has excess noncondensable gases (air), the container must be stored at a temperature of 65 °F (18.3 °C) or above for a period of time, 12 h, protected from direct sun.

5.2 Install a calibrated pressure gage, with 1 psig divisions (0.07 kg), to the container and determine the container pressure.

5.3 With a calibrated thermometer, measure the air temperature within 4 in (10 cm) of the container surface.

5.4 Compare the observed container pressure and air temperature to determine if the container exceeds the pressure limits found on Table 1, e.g., air temperature 70 °F (21 °C) pressure must not exceed 80 psig (5.62 kg/cm^2).

TABLE 1

Temp °F	Psig	Temp °F	Psig	Temp °F	Psig	Temp °F	Psig	Temp °F	Psig
65	74	75	87	85	102	95	118	105	136
66	75	76	88	86	103	96	120	106	138
67	76	77	90	87	105	97	122	107	140
68	78	78	92	88	107	98	124	108	142
69	79	79	94	89	108	99	125	109	144
70	80	80	96	90	110	100	127	110	146
71	82	81	98	91	111	101	129	111	148
72	83	82	99	92	113	102	130	112	150
73	84	83	100	93	115	103	132	113	152
74	86	84	101	94	116	104	134	114	154

TABLE 1 (METRIC)

Temp °C	Pres	Temp °C	Pres	Temp °C	Pres	Temp °C	Pres	Temp °C	PRres
18.3	5.20	23.9	6.11	29.4	7.17	35.0	8.29	40.5	9.56
18.8	5.27	24.4	6.18	30.0	7.24	35.5	8.43	41.1	9.70
19.4	5.34	25.0	6.32	30.5	7.38	36.1	8.57	41.6	9.84
20.0	5.48	25.5	6.46	31.1	7.52	36.6	8.71	42.2	9.98
20.5	5.55	26.1	6.60	31.6	7.59	37.2	8.78	42.7	10.12

TABLE 1 (METRIC)—Continued

Temp °C	Pres	Temp °C	Pres	Temp °C	Pres	Temp °C	Pres	Temp °C	PRres
21.1	5.62	26.6	6.74	32.2	7.73	37.7	8.92	43.3	10.26
21.6	5.76	27.2	6.88	32.7	7.80	38.3	9.06	43.9	10.40
22.2	5.83	27.7	6.95	33.3	7.94	38.8	9.13	44.4	10.54
22.7	5.90	28.3	7.03	33.9	8.08	39.4	9.27	45.0	10.68
23.3	6.04	28.9	7.10	34.4	8.15	40.0	9.42	45.5	10.82

Pres kg/sq cm.

5.5 If the container pressure is less than the Table 1 values and has been recycled, limits of noncondensable gases (air) have not been exceeded and the refrigerant may be used.

5.6 If the pressure is greater than the range and the container contains recycled material, slowly vent from the top of the container a small amount of vapor into the recycle equipment until the pressure is less than the pressure shown on Table 1.

5.7 If the container still exceeds the pressure shown on Table 1, the entire contents of the container shall be recycled.

6. Containers for Storage of Recycled Refrigerant

6.1 Recycled refrigerant should not be salvaged or stored in disposable refrigerant containers. This is the type of container in which virgin refrigerant is sold. Use only DOT CFR title 49 or UL approved storage containers for recycled refrigerant.

6.2 Any container of recycled refrigerant that has been stored or transferred must be checked prior to use as defined in section 5.

7. Transfer of Recycled Refrigerant

7.1 When external portable containers are used for transfer, the container must be evacuated at least 27 in of vacuum (75 mm Hg absolute pressure) prior to transfer of the recycled refrigerant. External portable containers must meet DOT and UL standards.

7.2 To prevent on-site overfilling when transferring to external containers, the safe filling level must be controlled by weight and must not exceed 60% of container gross weight rating.

8. Disposal of Empty/Near Empty Containers

8.1 Since all the refrigerant may not be removed from disposable refrigerant containers during normal system charging procedures, empty/near empty container contents should be reclaimed prior to disposal of the container.

8.2 Attach the container to the recovery unit and remove the remaining refrigerant. When the container has been reduced from a pressure to a vacuum, the container valve can be closed. The container should be marked empty and is ready for disposal.

Rationale

Not applicable.

Relationship of SAE Standard to ISO Standard.

Not applicable.

Reference Section

SAE J1990, Extraction and Recycle Equipment for Mobile Automotive Air-Conditioning Systems

Application

During service of mobile air-conditioning systems, containment of the refrigerant is important. This procedure provides service guidelines for technicians when repairing vehicles and operating equipment defined in SAE J1990.

Committee Composition

Developed by the SAE Defrost and Interior Climate Control Standards Committee

W.J. Atkinson, Sun Test Engineering, Paradise Valley, AZ—Chairman
J.J. Amin, Union Lake, MI
H.S. Andersson, Saab Scania, Sweden
P.E. Anglin, ITT Higbie Mfg. Co., Rochester, MI
R.W. Bishop, GMC, Lockport, NY
D.Hawks, General Motors Corporation, Pontiac, MI
J.J. Hernandez, NAVISTAR, Ft. Wayne, IN
H. Kaltner, Volkswagen AG, Germany, Federal Republic
D.F. Last, GMC, Troy, MI
D.E. Linn, Volkswagen of America, Warren, MI
J.H. McCorkel, Freightliner Corp., Charlotte, NC
C.J. McLachlan, Livonia, MI
H.L. Miner, Climate Control Inc., Decatur, IL
R.J. Niemiec, General Motors Corp., Pontiac, MI
N. Novak, Chrysler Corp., Detroit, MI
S. Oulouhojian, Mobile Air Conditioning Society, Upper Darby, PA
J. Phillips, Air International, Australia
R.H. Proctor, Murray Corp., Cockeysville, MD
G. Rolling, Behr America Inc., Ft. Worth, TX
C.D. Sweet, Signet Systems Inc., Harrodsburg, KY

J.P. Telesz, General Motors Corp., Lockport, NY

APPENDIX B TO SUBPART B OF PART 82—STANDARD FOR RECOVER EQUIPMENT

SAE J1989, Recommended Service Procedure for the Containment of R–12, as set forth under Appendix A, also applies to this Appendix B.

SAE J2209, issued June, 1992.

SAE RECOMMENDED PRACTICE: CFC-12 (R–12) EXTRACTION EQUIPMENT FOR MOBILE AUTOMOTIVE AIR-CONDITIONING SYSTEMS

Foreword

CFCs deplete the stratospheric ozone layer that protects the earth against harmful ultraviolet radiation. To reduce the emissions of CFCs, the 1990 Clean Air Act requires recycle of CFC-12 (R–12) used in mobile air-conditioning systems to eliminate system venting during service operations. SAE J1990 establishes equipment specifications for on-site recovery and reuse of CFCs in mobile air-conditioning systems. Establishing extraction equipment specifications for CFC-12 will provide service facilities with equipment to assure that venting of refrigerant will not occur.

1. Scope

The purpose of this document is to provide equipment specifications for CFC-12 (R–12) recovery for recycling on-site or for transport off-site to a refrigerant reclamation facility that will process it to ARI (Air-Conditioning and Refrigeration Institute) standard 700–93 as a minimum. It is not acceptable that the refrigerant removed from a mobile air-conditioning system, with this equipment, be directly returned to a mobile air-conditioning system.

This information applies to equipment used to service automobiles, light trucks, and other vehicles with similar CFC-12 systems.

2. References

2. Applicable Documents—The following documents form a part of this specification to the extent specified herein.

2.1.1 SAE Publications—Available from SAE, 400 Commonwealth Drive, Warrendale, PA 15096–0001.

SAE J639—Vehicle Service Coupling

SAE J1990—Extraction and Recycle Equipment for Mobile Automotive Air-Conditioning Systems

SAE J2196—Service Hose for Automotive Air-Conditioning

2.1.2 ARI Publications—Available from Air-Conditioning and Refrigeration Institute, 1501 Wilson Boulevard, Sixth Floor, Arlington, VA 22209.

ARI 700–93—Specifications for Fluorocarbon Refrigerants

2.1.3 CGA Publications—Available from CGA, Crystal Gateway #1, Suite 501, 1235 Jefferson Davis Highway, Arlington, VA 22202.

CGA S–1.1—Pressure Relief Device Standard Part 1—Cylinders for Compressed Gases

2.1.4 DOT Specifications—Available from the Superintendent of Documents, U.S. Government Printing Office, Washington, DC 20402.

49 CFR, Section 173.304—Shippers—General Requirements for Shipments and Packagings

2.1.5 UL Publications—Available from Underwriters Laboratories, 333 Pfingsten Road, Northbrook, IL 60062–2096.

UL 1769—Cylinder Valves

3. Specifications and General Description

3.1 The equipment must be able to extract CFC-12 from a mobile air-conditioning system.

3.2 The equipment discharge or transfer fitting shall be unique to prevent the unintentional use of extracted CFC-12 to be used for recharging auto air conditioners.

3.3 The equipment shall be suitable for use in an automotive service garage environment as defined in 6.8.

3.4 Equipment Certification—The equipment must be certified by Underwriters Laboratories or an equivalent certifying laboratory to meet this standard.

3.5 Label Requirements—The equipment shall have a label ''Design Certified by (company name) to meet SAE J2209 for use with CFC-12. The refrigerant from this equipment must be processed to ARI 700–93 specifications before reuse in a mobile air-conditioning system.'' The minimum letter size shall be bold type 3mm in height.

4. Safety Requirements

4.1 The equipment must comply with applicable federal, state and local requirements on equipment related to the handling of R–12 material. Safety precautions or notices or labels related to the safe operation of the equipment shall also be prominently displayed on the equipment and should also state ''CAUTION—SHOULD BE OPERATED BY CERTIFIED PERSONNEL.'' The safety identification shall be located on the front near the controls.

4.2 The equipment must comply with applicable safety standards for electrical and mechanical requirements.

5. Operating Instructions

5.1 The equipment manufacturer must provide operating instructions, necessary maintenance procedures and source information for replacement parts and repair.

5.2 The equipment must prominently display the manufacturer's name, address and any items that require maintenance or replacement that affect the proper operation of the equipment. Operation manuals must cover information for complete maintenance of the equipment to assure proper operation.

6. Functional Description

6.1 The equipment must be capable of ensuring recovery of the CFC-12 from the system being serviced, by reducing the system pressure to a minimum of 102 mm of mercury below atmospheric. To prevent system delayed outgassing, the unit must have a device that assures that the refrigerant has been recovered from the air-conditioning system.

6.1.1 Testing laboratory certification of the equipment capability is required which shall process contaminated refrigerant samples at specific temperatures.

6.2 The equipment must be preconditioned with 13.6 kg of the standard contaminated CFC-12 at an ambient of 21 °C before starting the test cycle. Sample amounts are not to exceed 1.13 kg with sample amounts to be repeated every 5 minutes. The sample method fixture defined in Figure 1 of appendix A shall be operated at 24 °C. Contaminated CFC-12 samples shall be processed at ambient temperatures of 10 and 49 °C.

6.2.1 Contaminated CFC-12 sample.

6.2.2 Standard contaminated CFC-12 refrigerant, 13.6 Kg sample size, shall consist of liquid CFC-12 with 100 ppm (by weight) moisture at 21 °C and 45,000 ppm (by weight) mineral oil 525 suspension nominal and 770 ppm (by weight) of noncondensable gases (air).

6.3 Portable refillable containers used in conjunction with this equipment must meet applicable DOT standards.

6.3.1 The container color must be gray with yellow top to identify that it contains used CFC-12 refrigerant. It must be permanently marked on the outside surface in black print at least 20 mm high ''DIRTY R–12—DO NOT USE, MUST BE REPROCESSED''.

6.3.2 The portable refillable container shall have a SAE ⅜ inch flare male thread connection as identified in SAE J639 CFC-12 High Pressure Charging Valve Figure 2.

6.3.3 During operation the equipment shall provide overfill protection to assure that the storage container liquid fill does not exceed 80% of the tank's rated volume at 21 °C per DOT standard, CFR Title 49, section 173.304 and the American Society of Mechanical Engineers.

6.4 Additional Storage Tank Requirements.

6.4.1 The cylinder valve shall comply with the standard for cylinder valves, UL 1769.

6.4.2 The pressure relief device shall comply with the pressure relief device standard part 1, CGA pamphlet S–1.1.

6.4.3 The container assembly shall be marked to indicate the first retest date, which shall be 5 years after date of manufacture. The marking shall indicate that retest must be performed every subsequent five years. The marking shall be in letters at least 6 mm high.

6.5 All flexible hoses must meet SAE J2196 standard for service hoses.

6.6 Service hoses must have shutoff devices located within 30 cm of the connection point to the system being serviced to minimize introduction of noncondensable gases into the recovery equipment during connection and the release of the refrigerant during disconnection.

6.7 The equipment must be able to separate the lubricant from the recovered refrigerant and accurately indicate the amount removed from the system during processing in 30 ml units.

6.7.1 The purpose of indicating the amount of lubricant removed is to ensure that a proper amount is returned to the mobile air-conditioning system for compressor lubrication.

6.7.2 Refrigerant dissolved in this lubricant must be accounted for to prevent system lubricant overcharge of the mobile air-conditioning system.

6.7.3 Only new lubricant, as identified by the system manufacturer, should be replaced in the mobile air-conditioning system.

6.7.4 Removed lubricant from the system and/or the equipment shall be disposed of in accordance with applicable federal, state and local procedures and regulations.

6.8 The equipment must be capable of continuous operation in ambient temperatures of 10 °C to 49 °C and comply with 6.1.

6.9 The equipment should be compatible with leak detection material that may be present in the mobile air-conditioning system.

7.0 For test validation, the equipment is to be operated according to the manufacturer's instructions.

[60 FR 21688, May 2, 1995]

APPENDIX C TO SUBPART B OF PART 82—SAE J2788 STANDARD FOR RECOVERY/RECYCLE AND RECOVERY/RECYCLE/RECHARGING EQUIPMENT FOR HFC–134a REFRIGERANT

FOREWORD

This Appendix establishes the specific minimum equipment requirements for the recovery/recycling of HFC–134a that has been directly removed from, and is intended for reuse in, mobile air-conditioning systems and recovery/recycling and system recharging of recycled, reclaimed or virgin HFC–134a. Establishing such specifications will ensure that system operation with recycled HFC–134a will provide the same level of

performance and durability as new refrigerant.

1. SCOPE

The purpose of this SAE Standard is to establish the specific minimum equipment performance requirements for recovery and recycling of HFC–134a that has been directly removed from, and is intended for reuse in, mobile air-conditioning (A/C) systems. It also is intended to establish requirements for equipment used to recharge HFC–134a to an accuracy level that meets Section 9 of this document and SAE J2099. The requirements apply to the following types of service equipment and their specific applications.

a. Recovery/Recycling Equipment,

b. Recovery/Recycling—Refrigerant Charging,

c. Refrigerant Recharging Equipment Only.

1.1 Improved refrigerant recovery equipment is required to ensure adequate refrigerant recovery to reduce emissions and provide for accurate recharging of mobile air conditioning systems. Therefore, 12 months following the publication date of this standard, requirements in this standard supplements and supersedes, SAE J2210.

2. REFERENCES

2.1 Applicable Publications

The following publications form a part of this specification to the extent specified herein. Unless otherwise indicated, the latest issue of SAE publications shall apply.

2.1.1 SAE Publications

Available from SAE, 400 Commonwealth Drive, Warrendale, PA 15096–0001, Tel: 877–606–7323 (inside USA and Canada) or 724–776–4970 (outside USA), *www.sae.org*.

SAE J2099 Standard of Purity for Recycled HFC–134a (R–134a) for Use in Mobile Air-Conditioning Systems

SAE J2196 Service Hoses for Automotive Air-Conditioning

SAE J2197 Service Hose Fittings for Automotive Air-Conditioning

SAE J2296 Retest of Refrigerant Container

2.1.2 CGA Publications

Available from CGA, 4221 Walney Road, 5th Floor, Chantilly VA 20151–2923, Tel: 703–788–2700, *http://www.cganet.com*.

CGA Pamphlet S–1.1 Pressure Relief Device Standard Part 1—Cylinders for Compressed Gases 2.1.3 DOT Publications

Available from the Superintendent of Documents, U.S. Government Printing Office, Mail Stop: SSOP, Washington, DC 20402–9320.

OT Standard, CFR Title 49, Section 173.304 Shippers—General Requirements for Shipments and Packagings

2.1.4 UL Publications

Available from Underwriters Laboratories Inc., 333 Pfingsten Road, Northbrook, IL 60062–2096, Tel: 847–272–8800, *http://www.ul.com*.

UL 1769 Cylinder Valves

UL 1963 Refrigerant Recovery/Recycling Equipment

3. SPECIFICATION AND GENERAL DESCRIPTION

3.1 The equipment must be able to remove and process HFC–134a (R–134a) from mobile A/C systems to the purity level specified in SAE J2099.

3.2 The equipment shall be suitable for use in an automotive service garage environment and be capable of continuous operation in ambients from 10 °C to 49 °C (50 °F to 120 °F). If it is designed to recharge a system, and it uses a scale for this purpose, the scale must demonstrate the ability to maintain accuracy per the test in 10.2.

3.3 The equipment must be certified that it meets this specification by an EPA listed certifying laboratory.

3.4 The equipment shall have a label, which states, ''Certified by (Certifying Agent) to Meet SAE J2788 superseding SAE J2210'' in bold-type letters a minimum of 3 mm (⅛ in) in height.

4. REFRIGERANT RECYCLING EQUIPMENT REQUIREMENTS

4.1 Moisture and Acid

The equipment shall incorporate a desiccant package that must be replaced before saturation with moisture, and whose mineral acid capacity is at least 5% by weight of the dry desiccant.

4.1.1 The equipment shall be provided with a means of indicating when the filter desiccant moisture capacity has reached the allowable limit and desiccant replacement is required. This may include a reliable means of detecting moisture level or an algorithm based on the amount refrigerant recovered. The user must be clearly alerted to replace the filter prior to the full saturation. Warnings shall be displayed on screens and (printed on printouts where applicable). The warnings must explain that the machine is approaching the end of filter life. The manufacturer must incorporate a lockout when the end of filter life is reached.

4.1.2 The manufacturer shall use an identification system to ensure that a new filter has been installed to reset the machine for operation.

4.2 Filter

The equipment shall incorporate an in-line filter that will trap particulates of 15 micron spherical diameter or greater.

4.3 Scale (if used)

The scale must maintain accuracy when moved, as per the test in Section 10.

4.4 Purging Noncondensable Gases

4.4.1 The equipment shall automatically purge noncondensables (NCGs), which are primarily air, if the acceptable level is exceeded. NCG removal must be part of the normal operation of the equipment and instructions must be provided to enable the task to be accomplished within 30 min (to reach the refrigerant purity level specified in SAE J2099).

4.4.2 Refrigerant loss from noncondensable gas purging during the testing described in Section 8 shall be minimized by a method that initiates a purge when the machine has not been in use for a period long enough for air-refrigerant separation in the tank to have occurred.

4.5 Recharging and Transfer of Recycled Refrigerant

Recycled refrigerant for recharging and transfer shall be taken from the liquid phase only.

5. SAFETY REQUIREMENTS

5.1 The equipment must comply with applicable federal, state, and local requirements on equipment related to handling HFC–134a material. Safety precautions or notices related to safe operation of the equipment shall be prominently displayed on the equipment and should also state ''CAUTION—SHOULD BE OPERATED BY QUALIFIED PERSONNEL.''

5.2 Under NO CIRCUMSTANCES should any equipment be pressure tested or leak tested with air/HFC–134a mixtures.

Do not use compressed air (shop air) or leak detection in systems containing HFC–134a.

6. OPERATING INSTRUCTIONS

6.1 The equipment manufacturer shall provide a warning in the instruction manual regarding the possibility of refrigerant contamination in the mobile A/C system being serviced.

6.1.1 If recovery/recycle equipment has refrigerant identification equipment, the refrigerant identification equipment shall meet the requirements of SAE J1771.

6.1.2 Recovery/recycling equipment not having refrigerant identification capability shall have instructions in the equipment manual covering possible contamination problems to the equipment and the contamination of the existing recycled refrigerant in the container in the equipment.

6.2 The equipment manufacturer must provide operating instructions, including proper attainment of vehicle system vacuum (i.e., when to stop the extraction process), filter/desiccant replacement, and purging of noncondensable gases (air). Also to be included are any other necessary maintenance procedures, source information for replacement parts and, repair and safety precautions.

6.2.1 The manual shall identify the proper maintaining of hose and seals to prevent the addition of excess air, due to leaks, during the recovery process, which would increase the NCG level in the recovered refrigerant.

6.3 The equipment must prominently display the manufacturer's name, address, the type of refrigerant it is designed to recycle, a service telephone number, and the part number for the replacement filter/drier.

7. FUNCTIONAL DESCRIPTION

The ability of the equipment to meet the refrigerant recovery and recharge specifications of this section shall be determined by the test procedures of Section 10.

7.1 The equipment must be capable of continuous operation in ambient temperatures of 10 °C (50 °F) to 49 °C (120 °F). Continuous is defined as completing recovery/recycle and recharge (if applicable) operations with no more than a brief reset period between vehicles, and shall not include time delays for allowing a system to outgas (which shall be part of the recovery period provided by this standard). Continuous may include time out for an air purge if necessary, although it is understood that extended equipment-off time is preferred to allow NCG and refrigerant separation in the supply tank for optimum results.

7.1.1 The equipment shall be capable of removing a minimum of 95.0% of the refrigerant from the test system in 30 minutes or less, without external heating, or use of any device (such as shields, reflectors, special lights, etc.) which could heat components of the system. The recovery procedures shall be based on 21 to 24 °C (70 to 75 °F) ambient temperature. The test system for qualifying shall be a 1.4 kg (3.0 lbs) capacity orifice tube/accumulator system in a 2005 Chevrolet Suburban with front and rear A/C, or the test option described in 10.5, and shall be determined by accurately weighing the recovery machine with the resolution and accuracy of within 3 g (.006 lb) in the range of the machine's weight. The laboratory shall maintain records of the vehicle, including its VIN (vehicle identification number).

7.1.2 However, the preceding shall not preclude a brief period of engine operation at fast idle (up to 15 minutes, up to 2000 rpm) to circulate refrigerant and oil, and provide

some engine and warm-up of A/C refrigeration components. The laboratory shall monitor coolant temperature per the vehicle engine coolant temperature sensor, and coolant temperature shall not be allowed to exceed 105 °C (221 °F). The time required shall not be included in the total time of 30 minutes set forth in 7.1.1.

7.1.3 The refrigerant that is recovered, following oil separation, shall be measured and the quantity displayed, accurate to within ±30 g (1.0 oz). The equipment must include a provision for checking the accuracy, per the requirements of 9.1.

7.2 During recovery operation, the equipment shall provide overfill protection to assure that the liquid fill of the storage container (which may be integral or external) does not exceed 80% of the tank's rated volume at 21 °C per Department of Transportation (DOT) Standard, CFR Title 49, Section 173.304 and the American Society of Mechanical Engineers.

7.3 Portable refillable tanks or containers used in conjunction with this equipment must be labeled ''HFC–134a (R–134a),'' meet applicable Department of Transportation (DOT) or Underwriters Laboratories (UL) Standards, and shall incorporate fittings per SAE J2197.

7.3.1 The cylinder valve shall comply with the standard for cylinder valves, UL 1769.

7.3.2 The pressure relief device shall comply with the Pressure Relief Device Standard Part 1—Cylinders for Compressed Gases, CGA Pamphlet S–1.1.

7.3.3 The tank assembly shall be marked to indicate the first retest date, which shall be 5 years after the date of manufacture. The marking shall indicate that retest must be performed every subsequent 5 years. SAE J2296 provides an inspection procedure. The marking shall be in letters at least 6 mm (¼ in) high.

7.3.4 ASME tanks as defined in UL–1963 may be used and are exempt from the retest requirements.

7.3.5 If the machine is designed for recharging, and the marketer permits use of a non-refillable refrigerant tank, the machine shall include a way to ensure refrigerant remaining in the tank (called the ''heel'') to no more than 2% of tank rated capacity when the tank is indicated to be empty. This may be done by the machine marketer as follows:

• Specify a non-venting procedure, to minimize the amount of unused refrigerant remaining in the tank. The machine shall include any devices required for the procedure, other than ordinary service shop tools and supplies, and include in the operator's manual, any instructions.

• Provide an automatic or (with instructions in the operator's manual) semi-automatic non-venting procedure with the machine.

The laboratory shall test for the 2% capability. For testing purposes it may use a refillable tank, minimum 15 lb capacity (6.8 kg) containing a minimum of 7.5 lbs (3.4 kg) refrigerant. The test is as follows:

a. Weigh the tank at the start of the test, on a scale accurate to plus/minus 3 grams, to ensure it contains sufficient refrigerant.

b. Operate the machine to remove refrigerant from the tank, charging into a holding container until the tank is indicated to be empty. Continue with the marketer's recommended procedure for the 2% capability.

c. Weigh the tank, on a scale accurate to plus/minus 3 grams.

d. Using the recovery compressor and/or a vacuum pump, draw the tank into a vacuum of 9 to 10 inches Mercury (225 to 250 mm Mercury). The tank must hold that vacuum with a decay of less than 10% in 10 minutes. If vacuum decays 10% or more, the procedure shall be repeated as necessary to ensure the tank is empty.

e. Weigh the tank on a scale accurate to plus/minus 3 grams. The difference in weight from Steps 3 to 5 shall be within 2% of the weight of the amount of refrigerant that is the tanks rated capacity.

f. This test may be performed at the conclusion of testing in 10.4 or 10.5. If the machine passes or has passed all other testing in this standard, the marketer may make modifications in procedure and/or machine operation and retest once at a later date, within 90 days. If the machine fails the retest, the machine must be completely retested per this standard, or may be certified per the following alternative. The marketer of the machine may specify use of a non-refillable refrigerant tank that provides for recycling and/or disposal of the residual refrigerant, in either case in a manner that does not vent. Or the marketer may exclude use of a one-way container, in the machine's operating instructions.

7.4 All flexible hoses must comply with SAE J2196.

7.5 Service hoses must have shutoff devices located at the connection point to the system being serviced. Any hoses or lines connected to refrigerant containers on or in the machine also shall have shutoff devices at the connection points, so that the containers may be changed without loss of refrigerant. A tank that is a permanent installation is exempt from this requirement.

7.6 The equipment shall separate oil from the refrigerant, measure the amount accurate to 20 ml (0.7 oz.), so the technician has an accurate basis for adding oil to the system.

7.6.1 This statement shall be predominately identified in the equipment service manual.

NOTE: Use only new lubricant to replace the amount removed during the recycling process. Used lubricant should be discarded

per applicable federal, state and local requirements.

8. TESTING

This test procedure and its requirements are to be used to determine the ability of the recycling equipment to adequately recycle contaminated refrigerant.

8.1 The equipment shall be able to clean the contaminated refrigerant in §8.3 to the purity level defined in SAE J2099.

8.2 The equipment shall be operated in accordance with the manufacturer's operating instructions.

8.3 Contaminated HFC–134a (R–134a) Sample

8.3.1 The standard contaminated refrigerant shall consist of liquid HFC–134a with 1300 ppm (by weight) moisture (equivalent to saturation at 38 °C, 100 °F), 45000 ppm (by weight) HFC–134a compatible lubricant, and 1000 ppm (by weight) of noncondensable gases (air).

8.3.1.1 The HFC–134a compatible lubricant referred to in 8.3.1, shall be polyalkylene glycol (PAG), ISO 100 such as UCLN or PAG ISO 46–55, such as Idemitsu or equivalent, which shall contain no more than 1000 ppm by weight of moisture.

8.3.1.2 Although the test lubricant is a PAG, to conform to that used in the test vehicle system, the equipment manufacturer also shall ensure that it is compatible with polyol ester lubricant, such as ND 11 as used in electrically driven compressors in some hybrid vehicles.

8.4 Test Cycle

8.4.1 The equipment must be preconditioned by processing 13.6 kg (30 lb) of the standard contaminated HFC–134a at an ambient of 21 to 24 °C (70 to 75 °F) before starting the test cycle. 1.13 kg (2.56 lb) samples are to be processed at 5 min intervals. The test fixture, depicted in Figure 1, shall be operated at 21 to 24 °C (70 to 75 °F).

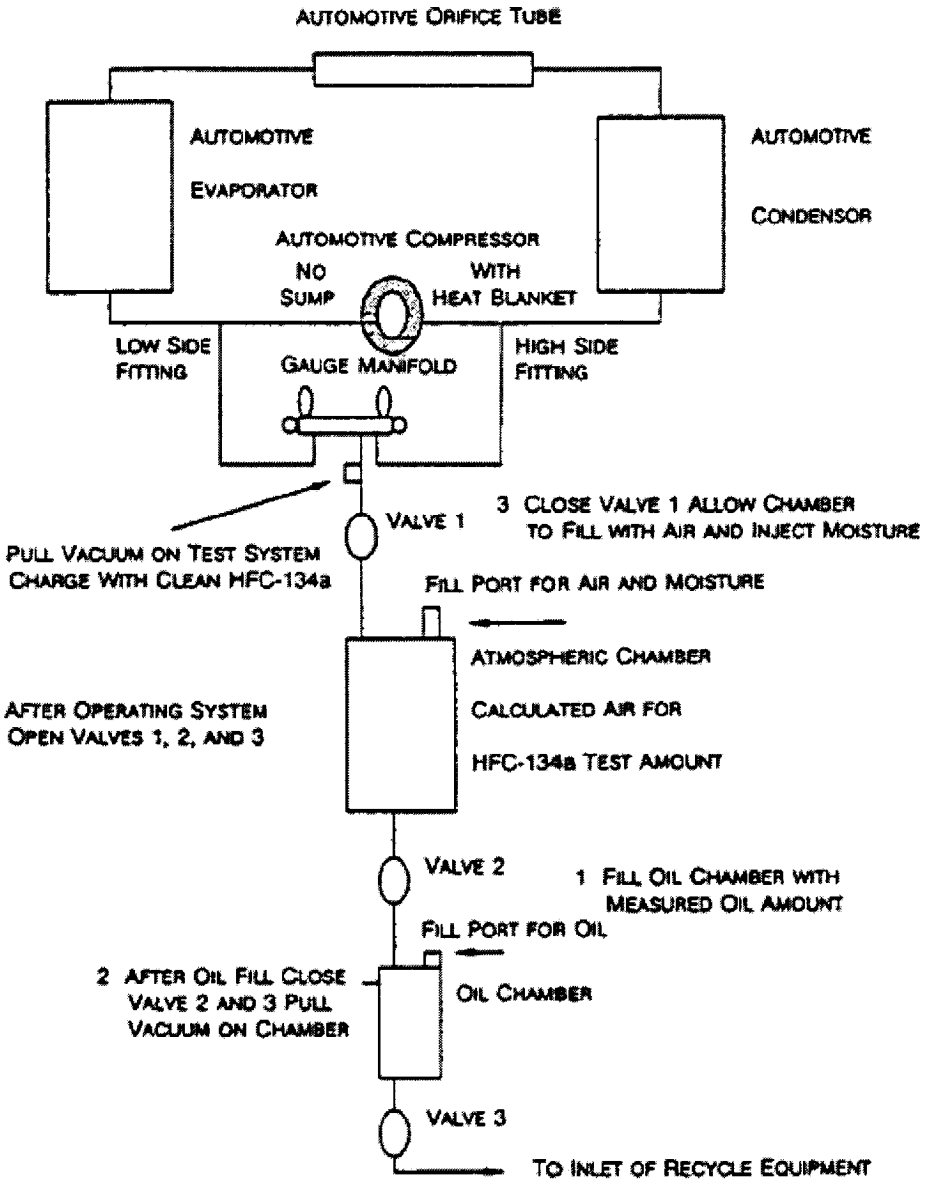

FIGURE 1 - TEST FIXTURE

8.4.2 Following the preconditioning procedure per 8.4.1, 18.2 kg (40 lb) of standard contaminated HFC–134a are to be processed by the equipment.

8.5 Sample Requirements

8.5.1 Samples of the standard contaminated refrigerant from 8.3.1 shall be processed as required in 8.6 and shall be analyzed

after said processing as defined in 8.7, 8.8, and 8.9. Note exception for noncondensable gas determination in 8.9.4.

8.6 Equipment Operating Ambient

8.6.1 The HFC–134a is to be cleaned to the purity level, as defined in SAE J2099, with the equipment operating in a stable ambient of 10, 21, and 49 °C (50, 70 and 120 °F) while processing the samples as defined in 8.4.

8.7 Quantitative Determination of Moisture

8.7.1 The recycled liquid phase sample of HFC–134a shall be analyzed for moisture content via Karl Fischer coulometric titration, or an equivalent method. The Karl Fischer apparatus is an instrument for precise determination of small amounts of water dissolved in liquid and/or gas samples.

8.7.2 In conducting this test, a weighed sample of 30 to 130 g is vaporized directly into the Karl Fischer anolyte. A coulometric titration is conducted and the results are reported as parts per million moisture (weight).

8.8 Determination of Percent Lubricant

8.8.1 The amount of lubricant in the recycled HFC–134a sample shall be determined via gravimetric analysis. The methodology must account for the hygroscopicity of the lubricant.

8.8.2 Following venting of noncondensable gases in accordance with the manufacturer's operating instructions, the refrigerant container shall be shaken for 5 min prior to extracting samples for testing.

8.8.3 A weighed sample of 175 to 225 g of liquid HFC–134a is allowed to evaporate at room temperature. The percent lubricant is calculated from weights of the original sample and the residue remaining after evaporation.

8.9 Noncondensable Gases—Testing for Amount

8.9.1 The amount of noncondensable gases shall be determined by gas chromatography. A sample of vaporized refrigerant liquid shall be separated and analyzed by gas chromatography. A Porapak Q column at 130 °C (266 °F) and a hot wire detector may be used for the analysis.

8.9.2 This test shall be conducted on liquid phase samples of recycled refrigerant taken from a full container as defined in 7.2 within 30 min following the proper venting of noncondensable gases.

8.9.3 The liquid phase samples in 8.9.2 shall be vaporized completely prior to gas chromatographic analysis.

8.9.4 This test shall be conducted at 10 and 49 °C (50 and 120 °F) and may be performed in conjunction with the testing defined in 8.6. The equipment shall process at least 13.6 kg (30 lb) of standard contaminated refrigerant for this test.

8.9.5 The equipment shall be capable of charging refrigerant into systems with various lubrication types and shall deliver less than 1% by weight residual oil during system charge if the machine permits oil charging with refrigerant (due to residual oil in the service hoses and recovery unit refrigerant circuit from prior recovery, diagnostics and oil injection. This shall be determined during SAE J2099 testing.)

9. Recharging the System

9.1 It is the responsibility of the equipment manufacturer to ensure that the vacuum removal performance leaves the system 98% free of NCGs before recharging, following recovery and recycle under the provisions of this document.

The equipment must be capable of both indicating and recharging the system to within 15 g (0.50 oz) of vehicle manufacturer's specifications. The laboratory shall test for this capability by choosing a charge amount that is within the range of the vehicle manufacturer's specifications. The equipment must indicate and charge the system with that chosen amount, within ±15 g (0.5 oz).

Example: If 500 g is chosen, the actual and indicated charge must be 485 to 515 g, with any difference between actual and indicated charge within the laboratory scale accuracy requirements of this standard. If a scale is used in the machine, the equipment manufacturer shall provide a method or service for the technician to check scale accuracy, and include any necessary accuracy-checking device (such as a calibration weight(s)) with the machine. If a mass flow system is used for charge determination, it must maintain accuracy equal to the 15 g (0.50 oz) specification. The equipment manufacturer shall provide a method for checking accuracy and include any necessary accuracy testing device(s) with the machine. If the accuracy testing device(s) for a scale or mass flow machine includes a consumable, the manufacturer shall include a quantity of replacement or refill devices for five years of periodic testing as recommended.

9.2 If any other system is used for charge determination, such as a positive displacement pump, the equipment manufacturer shall provide a method and any needed device(s) to check accuracy that is/are appropriate for its method of operation, including any temperature-compensating trim if used.

10. Equipment Test Procedure by Laboratory for Recovery/Recycling and Recovery/Recycling/Recharging Machines

10.1 Preliminary: Ambient (in shop) temperature shall be 21 to 24 °C (70 to 75 °F). Test vehicle shall be ''overnight cold'' (not run for at least eight hours).

10.2 The machine must have a self-contained provision for checking accuracy of

the indicated amount of refrigerant recovered in liquid or vapor or mixture form(s) from a vehicle system and (if applicable) charged into a vehicle, and adjusting if necessary, to meet requirements of 9.1, 9.2. Therefore: If the machine uses a scale for that purpose, check the accuracy of that scale and make any adjustment if necessary. If an alternative method of measuring refrigerant is used, follow the equipment manufacturer's procedure for ensuring accuracy. Next, move the machine, such as by rolling it, along the floor, a minimum of 20 feet (6.1 meters) within 10 seconds. Follow with the test procedure in 10.3, then 10.4 or 10.5.

10.3 Test Procedure

If desired, this test procedure may be preceded by engine/system operation for up to 15 minutes, up to 2000 rpm.

1. You must start with an empty system, using this method: (a) Operate machine to recover refrigerant, per equipment manufacturer's instructions. (b) Deep-vacuum system to a minimum of 710 mm (28 in) of mercury. (c) Monitor vacuum for decay, checking every 20 minutes. If decay exceeds 75 mm (3 in), deep vacuum the system again. When system holds 710 mm (28 in) 75 mm (3 in) of mercury vacuum for three hours, it is considered empty.

2. Place machine on a platform scale with the capacity to weigh the recovery/recycle/recharge machine, and with the resolution and accuracy of within ±3 g (.006 lb) in the range of the machine's weight. Weight should include the machine's service hoses draped over the machine, and with the machine's oil reservoir removed. If necessary to add oil to vehicle system as a result of a system operation preparatory to the recovery process, inject the needed quantity through the service valve at this time.

3. Record weight of machine in as weight A.

4. Reconnect service hoses to the test vehicle.

5. Follow the equipment manufacturer's specified procedure for charging the vehicle manufacturer's recommended amount of refrigerant into the system. Note: if this does not apply to the machine under test, *i.e.* a recovery/recycling only machine, the use of charging equipment that meets this standard and the platform scale shall be used to verify the accuracy of the charge.

6. Disconnect the service hoses from the test vehicle and drape them on the machine. Check and record the weight of the machine. Record this weight as weight B. The difference between weight A and weight B should be equal to the recommended charge that was installed per the machine's display, within 15 g (0.5 oz). If the difference is greater than 15 g (±3 g), the machine fails the charge accuracy test, and no other tests shall be performed at that time. The manufacturer must document changes made to improve accuracy and furnish them to the laboratory prior to a new test. Exception: If the maximum deviation is no more than a total of 20 g, the calibration of the scale or other measuring system may be rechecked and readjusted once, and the entire test repeated just once.

10.4 Recovery Test Using a Vehicle

1. Following a successful system charge, the system and engine shall be run for 15 minutes at 2000 rpm to circulate oil and refrigerant, following which engine and system shall rest for eight hours. Then the laboratory may begin the recovery test. If the machine manufacturer specifies, operate the engine/system for up to 15 minutes, at up to 2000 rpm, then shut off engine/system.

2. If the machine has an automatic air purge, disable it. Check the weight of the machine with the platform scale (service hoses draped over machine, oil reservoir removed). Record the number as Weight C. Reinstall oil reservoir if it had been removed in the recovery procedure.

3. Start timer. Connect service hoses to system of test vehicle and perform recovery per the equipment manufacturer's instructions. The vehicle system service valves' cores must remain in the fittings for this procedure.

4. When recovery is completed, including from service hoses if that is part of the recommended procedure, disconnect hoses and drape over machine. Stop timer. The elapsed time shall be 30.0 minutes or less. If it is in excess of this time, the machine fails the test and no retest is allowed. The manufacturer must document changes made to the machine to improve its performance before a new test is allowed, and furnish them to the laboratory.

5. If the recovery is completed in no more than the 30.0 minutes, measure the oil level in the reservoir, remove the reservoir and then determine the amount of refrigerant recovered, as detailed in Nos. 6 and 7: As measured by the machine and also by noting the weight of the platform scale, which shall be recorded as Weight D.

6. The platform scale shall indicate that a minimum of 95% of the amount charged into the system has been recovered. If the platform scale indicates a lower percentage has been recovered, the machine fails the recovery test.

7. The machine display shall indicate that a minimum of 95.0% of the amount charged into the system has been recovered, within a tolerance of ±30 g (1 oz) when compared with the platform scale (Weight D minus Weight C). The 30 g (1 oz) tolerance may produce a machine display reading that is below the 95.0% recovery. If a greater difference between machine and platform scale occurs, the machine fails the recovery test.

10.5 Recovery Test Fixture Test Option

If an equipment manufacturer chooses, as an alternative to the actual vehicle, it may certify to SAE J2788 with a laboratory fixture that is composed entirely of all the original equipment parts of a single model year for the 3.0 lb capacity front/rear A/C system in the 2005–07 Chevrolet Suburban. All parts must be those OE-specified for one model year system and no parts may be eliminated or bypassed from the chosen system, or reproduced by a non-OE source. No parts may be added and/or relocated from the OE position in the 2005–07 Suburban. No parts may be modified in any way that could affect system performance for testing under this standard, except adding refrigerant line bends and/or loops to make the system more compact. Reducing the total length of the lines, however, is not permitted. The fixture system shall be powered by an electric motor, run at a speed not to exceed 2000 rpm, and for this test option, no system warm-up or equivalent procedure may be used. The certifying laboratory shall maintain records of all parts purchased, including invoices and payments. The assembly of the parts shall, as an outside-the-vehicle package, duplicate the OE system and its routing, including bends, except for permitted additions of bends and/or loops in refrigerant lines. Aside from the absence of engine operation and the limitations posed by the standard and the use of the electric motor, the test shall otherwise be the same as the test on the Suburban, including test temperature.

[72 FR 63495, Nov. 9, 2007]

APPENDIX D TO SUBPART B OF PART 82—SAE J2810 STANDARD FOR RECOVERY ONLY EQUIPMENT FOR HFC–134a REFRIGERANT

FOREWORD

This Appendix establishes the specific minimum equipment requirements for the recovery of HFC–134a that has been directly removed from, motor vehicle air-conditioning systems.

1. Scope

The purpose of this SAE Standard is to provide minimum performance and operating feature requirements for the recovery of HFC–134a (R–134a) refrigerant to be returned to a refrigerant reclamation facility that will process it to the appropriate ARI 700 Standard or allow for recycling of the recovered refrigerant to SAE J2788 specifications by using SAE J2788-certified equipment. It is not acceptable that the refrigerant removed from a mobile air-conditioning (A/C) system with this equipment be directly returned to a mobile A/C system.

This information applies to equipment used to service automobiles, light trucks, and other vehicles with similar HFC–134a (R–134a) A/C systems.

1.1 Improved refrigerant recovery equipment is required to ensure adequate refrigerant recovery to reduce emissions and provide for accurate recharging of mobile air conditioning systems. Therefore, 12 months following the publication date of this standard, it supersedes SAE J1732.

2. References

2.1 Applicable Publications

The following publications form a part of the specification to the extent specified herein. Unless otherwise indicated, the latest revision of SAE publications shall apply.

2.1.1 SAE Publications

Available from SAE, 400 Commonwealth Drive, Warrendale, PA 15096–0001, Tel: 877–606–7323 (inside USA and Canada) or 724–776–4970 (outside USA), *http://www.sae.org*.

SAE J639 Safety Standards for Motor Vehicle Refrigerant Vapor Compressions Systems.

SAE J1739 Potential Failure Mode and Effects Analysis in Design (Design FMEA) and Potential Failure Mode and Effects Analysis in Manufacturing and Assembly Processes (Process FMEA) and Effects Analysis for Machinery (Machinery FMEA).

SAE J1771 Criteria for Refrigerant Identification Equipment for Use with Mobile Air-Conditioning Systems.

SAE J2196 Service Hose for Automotive Air Conditioning.

SAE J2296 Retest of Refrigerant Container.

SAE J2788 HFC–134a (R–134a) Recovery/Recycling Equipment and Recovery/Recycling/Recharging for Mobile Air-Conditioning Systems.

2.1.2 ARI Publication

Available from Air-Conditioning and Refrigeration Institute, 4100 North Fairfax Drive, Suite 200, Arlington, VA 22203, Tel: 703–524–8800, *http://www.ari.org*.

ARI 700 Specifications for Fluorocarbon Refrigerants.

2.1.3 CGA Publication

Available from Compressed Gas Association, 4221 Walney Road, 5th Floor, Chantilly, VA 20151–2923, Tel: 703–788–2700, *http://www.cganet.com*.

CGA S–1.1 Pressure Relief Device Standard Part 1—Cylinders for Compressed Gases.

2.1.4 DOT Specification

Available from the Superintendent of Documents, U.S. Government Printing Office, Mail Stop: SSOP, Washington, DC 20402–9320.

CFR 49, Section 173.304 Shippers—General Requirements for Shipments and Packagings.

2.1.5 UL Publication

Available from Underwriters Laboratories Inc., 333 Pfingsten Road, Northbrook, IL 60062–2096, Tel: 847–272–8800, *http://www.ul.com*.

UL 1769 Cylinder Valves.

3. Specifications and General Description

3.1 The equipment must be able to recover (extract) HFC–134a (R–134a) refrigerant from a mobile A/C system per the test procedure of sections 7 and 8.

3.2 The equipment shall be suitable for use in an automotive service garage environment as defined in 6.8.

3.3 Equipment Certification

The equipment shall be certified by an EPA-listed laboratory to meet this standard. SAE J2810.

3.4 Label Requirements

The equipment shall have a label with bold type, minimum 3 mm high, saying ''Design Certified by (certifying agent, EPA listed laboratory) to meet SAE J2810 for use only with HFC–134a (R–134a). If it is to be re-used in an A/C system, the refrigerant recovered with this equipment must be processed to the appropriate ARI 700 specifications or to specifications by using equipment certified to perform to SAE J2788.''

3.5 SAE J1739

Potential Failure Mode and Effects Analysis in Design (Design FMEA), Potential Failure Mode and Effects Analysis in Manufacturing and Assembly Processes (Process FMEA), and Potential Failure Mode and Effects Analysis for Machinery (Machinery FMEA) shall be applied to the design and development of service equipment.

4. Safety Requirements

4.1 The equipment must comply with applicable federal, state, and local requirements on equipment related to the handling of HFC–134a (R–134a) material. Safety precautions or notices, labels, related to the safe operation of the equipment shall also be prominently displayed on the equipment and should state ''CAUTION—SHOULD BE OPERATED ONLY BY CERTIFIED PERSONNEL.'' The safety identification shall be located on the front near the controls.

4.2 The equipment must comply with applicable safety standards for the electrical and mechanical systems.

5. Operating Instructions

5.1 The equipment manufacturer must provide operating instructions that include information required by SAE J639, necessary maintenance procedures, and source information for replacement parts and repair.

5.1.1 The instruction manual shall include the following information on the lubricant removed. Only new lubricant, as identified by the system manufacturer, should be replaced in the mobile A/C system. Removed lubricant from the system and/or the equipment shall be disposed of in accordance with the applicable federal, state, and local procedures and regulations.

5.2 The equipment must prominently display the manufacturer's name, address, the type of refrigerant it is designed to extract (R–134a), a service telephone number, and any items that require maintenance or replacement that affect the proper operation of the equipment. Operation manuals must cover information for complete maintenance of the equipment to assure proper operation.

5.3 The equipment manufacturer shall provide a warning in the instruction manual regarding the possibility of refrigerant contamination from hydrocarbons, leak sealants and refrigerants other than R–134a in the mobile A/C system being serviced.

5.4 Recovery equipment having refrigerant identification equipment shall meet the requirements of SAE J1771.

5.5 Recovery equipment not having refrigerant identification capability shall have instructions warning the technician that failure to verify that the system contains only R–134a potentially exposes him or her to danger from flammable refrigerants and health hazards from toxic refrigerants. The instructions also shall alert to possible contamination problems to the recovery equipment from sealants and refrigerants other than R–134a, and to the fact that a refrigerant other than R–134a would require special handling by someone with specific expertise and equipment.

6. Function Description

6.1 The equipment must be capable of continuous operation in ambient temperatures of 10 °C (50 °F) to 49 °C (120 °F). Continuous is defined as completing recovery operation with no more than a brief reset between servicing vehicles, and shall not include time delays for allowing a system to outgas (which shall be part of the recovery period provided by this standard).

6.1.1 The equipment shall demonstrate ability to recovery a minimum of 95.0% of the refrigerant from the test vehicle in 30.0 minutes or less, without prior engine operation (for previous eight hours minimum), external heating or use of any device (such as shields, reflectors, special lights, etc.), which could heat components of the system.

The recovery procedure shall be based on a test at 21 °C to 24 °C (70 °F to 75 °F) ambient temperature. The test system for qualifying shall be a 1.4 kg (3.0 lbs) capacity orifice tube/accumulator system in a 2005–07 Chevrolet Suburban with front and rear A/C or the test option described in section 9.

6.1.2 The equipment shall demonstrate ability to recover a minimum of 85% of the refrigerant from the test vehicle or system of 6.1.1. in 30.0 minutes or less, at an ambient temperature of 10 °C to 13 °C (50 °F to 55 °F), subject to the same restrictions regarding engine operation and external heating.

6.1.3 During recovery operation, the equipment shall provide overfill protection so that the liquid fill of the storage container does not exceed 80% of the tank's rated volume at 21 °C (70 °F). This will ensure that the container meets Department of Transportation (DOT) Standard, CFR Title 49, section 173.304 and the American Society of Mechanical Engineers.

6.1.4 Portable refillable tanks or containers used in conjunction with this equipment must be labeled ''HFC–134a (R–134a) and meet applicable Department of Transportation (DOT) or Underwriters Laboratories (UL) Standards, and incorporate fittings per SAE J2197.

6.1.5 The cylinder valves shall comply with the standard for cylinder valves UL 1769.

6.1.6 The pressure relief device shall comply with the Pressure Relief Device Standard Part 1—Cylinders for Compressed Gasses CGA Pamphlet S–1.1.

6.1.7 The tank assembly shall be marked to indicate the first retest date, which shall be five years from the date of manufacture. The marking shall indicate that retest must be performed every subsequent five years. SAE J2296 provides an inspection procedure. The marking shall be in letters at least 6 mm (0.25 in) high. If ASME tanks, as defined in UL–1963, are used, they are exempt from the retest requirements.

6.2 If the marketer permits use of a refillable refrigerant tank, a method must be provided (including any necessary fittings) for transfer to a system that ensures proper handling (recycling or other, environmentally-legal disposal).

Restricting the equipment to use of non-refillable tanks eliminates compliance with this provision.

6.3 Prior to testing under this standard, the equipment must be preconditioned with a minimum of 13.6 kg of the standard contaminated HFC–134a (R–134a) at an ambient of 21 °C before starting the test cycle. Sample amounts are not to exceed 1.13 kg with sample amounts to be repeated every 5 min. The test fixture shown in Figure 1 shall be operated at 21 °C. Contaminated HFC–134a (R–134a) samples shall be processed at ambient temperatures of 10 °C and 49 °C (50 °F to 120 °F), without the equipment shutting down due to any safety devices employed in this equipment.

6.3.1 Contaminated HFC–134a (R–134a) sample shall be standard contaminated HFC–134a (R–134a) refrigerant, 13.6 kg sample size, consisting of liquid HFC–134a (R–134a) with 1300 ppm (by weight) moisture at 21 °C (70 °F) and 45 000 ppm (by weight) of oil (polyalkylene glycol oil with 46–160 cst viscosity at 40 °C) and 1000 ppm by weight of noncondensable gases (air).

6.3.2 Portable refillable containers used in conjunction with this equipment must meet applicable DOT Standards. The color of the container must be blue with a yellow top to indicate the container holds used HFC–134a (R–134a) refrigerant. The container must be permanently marked on the outside surface in black print at least 20 mm high, ''CONTAMINATED HFC–134a (R–134a)—DO NOT USE, MUST BE REPROCESSED.''

Figure 1—Test Fixture

6.3.3 The portable refillable container shall have a ½ in ACME thread.

6.4 Additional Storage Tank Requirements.

6.4.1 The cylinder valve shall comply with UL 1769.

6.4.2 The pressure relief device shall comply with CGA Pamphlet S–1.1.

6.5 All flexible hoses must meet SAE J2196 for service hoses.

6.6 Service hoses must have shutoff devices located at the connection points to the system being serviced to minimize introduction of noncondensable gases into the recovery equipment during connection and the release of the refrigerant during disconnection.

6.7 The equipment must be able to separate the lubricant from recovered refrigerant and accurately indicate the amount removed from the simulated automotive system during processing in 20 mL (0.7 fl oz) units.

6.7.1 The purpose of indicating the amount of lubricant removed is to ensure that a proper amount of new lubricant is returned to the mobile A/C system for compressor lubrication, if the system is to be charged with equipment meeting SAE J2788.

6.7.2 Refrigerant dissolved in this lubricant must be accounted for to prevent lubricant overcharge of the mobile A/C system.

6.8 The equipment must be capable of continuous operation in ambient temperatures of 10 °C to 49 °C (50 °F to120 °F) and comply with 6.1 to 6.4 of this standard.

6.9 For test validation, the equipment is to be operated according to the manufacturer's instructions.

7. Test Procedure A at 21 °C to 24 °C (70 °F to 75 °F).

The test vehicle (2005–2007 Chevrolet Suburban with rear A/C system—1.4 kg/ 3.0 lb) or laboratory fixture per section 10.5 of SAE

J2788, shall be prepared as for SAE J2788, section 10.3, following Steps 1, 2, 3, 4, and then the following:

7.1 Using a machine certified to SAE J2788 and with the machine on a platform scale with accuracy to within plus/minus 3.0 grams at the weight of the machine, charge the system to the vehicle manufacturer's recommended amount of refrigerant (1.4 kg–3.0 lb). The actual charge amount per the reading on the platform scale shall be used as the basis for the recovery efficiency of the recovery-only machine being tested to this standard. Run the engine (or operate test fixture with electric motor) for up to 15 minutes at up to 2000 rpm to circulate oil and refrigerant. The system then must rest for eight hours.

7.2 Place the recovery machine on the platform scale and record the weight with the hoses draped over the machine. Ambient temperature shall be within the range of 21 °C to 24 °C (70 °F to 75 °F) for this test, which shall be performed without the immediately prior engine operation permitted by SAE J2788, Section 10.3, Step No.1. The only permitted engine operation is as specified in 7.1.

7.3 Start the timer. Connect the service hoses to the system of the test vehicle and perform the recovery per the equipment manufacturer's instructions. The vehicle system's service valve cores must remain in the fittings for this procedure.

7.4 When recovery is completed, including from the service hoses if that is part of the recommended procedure, disconnect the hoses and drape over the machine. Stop the timer. The elapsed time shall be no more than 30 minutes.

7.5 Remove the oil reservoir, empty and reinstall. The platform scale shall indicate that a minimum of 95.0% of the refrigerant has been recovered, based on the charge amount indicated by the platform scale. If the machine has recovered the minimum of 95.0% within the 30.0 minutes, the next test shall be performed. If it fails this test, the marketer of the equipment must document changes to the equipment to upgrade performance before a retest is allowed. If it passes, the laboratory can proceed to Test Procedure B–10 °C to 13 °C (50 °F to 55 °F).

8. Test Procedure B at 10 °C to 13 °C (50 °F to 55 °F).

The test vehicle (2005–2007 Chevrolet Suburban front/rear A/C system (1.4 kg/3.0 lb) or test fixture per section 10.5 of SAE J2788, shall be prepared as per 7.0 and 7.1 of this standard, and then the following:

8.1 Place the recovery machine on the platform scale and record the weight with the hoses draped over the machine.

Ambient temperature at this time shall be no higher than 10 °C to13 °C (50 °F to 55 °F).

8.2 Start the timer. Connect the service hoses to the system of the test vehicle and perform the recovery per the equipment manufacturer's instructions. This also shall be performed without the immediately prior engine operation permitted by SAE J2788, section 10.4, Step No. 1. The vehicle system's service valve cores must remain in the fittings for this procedure.

8.3 When recovery is completed, including from the service hoses if that is part of the recommended procedure, disconnect the hoses and drape over the machine. Stop the timer. The elapsed time shall be no more than 30 minutes.

8.4 Remove the oil reservoir, empty and reinstall. The platform scale shall indicate that a minimum of 85.0% of the refrigerant has been recovered, based on the charge amount indicated by the platform scale. If the machine has recovered the minimum of 85.0% within the 30 minutes, it has passed the test procedure and if it meets all other requirements of this standard, it is certified.

9. Test Option

As in SAE J2788, Section 10.5, as an alternative to a 2005–2007 Chevrolet Suburban with rear A/C (1.4 kg–3.0 lb) system, a laboratory test fixture may be used to certify to SAE J2810 the fixture must be composed entirely of all the original equipment parts of a single model year for the 1.4 kg (3.0 lb) capacity system. All parts must be those OE-specified for one model year system and no parts may be eliminated or bypassed from the chosen system or reproduced from a non-OE source. No parts may be added and/or relocated from the OE position in the 2005–07 Suburban. No parts may be modified in any way that could affect system performance for testing under this standard, except adding refrigerant line bends and/or loops to make the system more compact. Reducing the total length of the lines, however, is not permitted.

The fixture systems for this standard shall not be powered by an electric motor during recovery, although a motor can be used, run at a speed not to exceed 2000 rpm, as part of the preparatory process, including installation of the charge.

[73 FR 34647, June 18, 2008]

APPENDIX E TO SUBPART B OF PART 82—THE STANDARD FOR AUTOMOTIVE REFRIGERANT RECYCLING EQUIPMENT INTENDED FOR USE WITH BOTH CFC-12 AND HFC-134a

SAE J2211, Recommended Service Procedure for the Containment of HFC-134a, as set forth under Appendix C of this subpart, and SAE J1989, Recommended Service Procedure for the Containment of CFC-12, as set forth under Appendix A of this subpart, also apply to this Appendix E of this subpart.

SAE J1770, issued December, 1995.

AUTOMOTIVE REFRIGERANT RECYCLE EQUIPMENT INTENDED FOR USE WITH BOTH CFC-12 AND HFC-134a

Foreword

The purpose of this standard is to establish specific minimum equipment requirements for automotive refrigerant recycling equipment intended for use with both CFC-12 and HFC-134a in a common refrigerant circuit. Establishing such specifications will assure that this equipment does not cross contaminate refrigerant above specified limits when used under normal operating conditions.

1. Scope

The purpose of this standard is to establish the specific minimum equipment intended for use with both CFC-12 and HFC-134a in a common refrigerant circuit that has been directly removed from, and is intended for reuse in, mobile air-conditioning (A/C) systems. This standard does not apply to equipment used for CFC-12 and HFC-134a having a common enclosure with separate circuits for each refrigerant.

2. References

2.1 Applicable Documents—The following publications form a part of this specification to the extent specified. The latest issue of SAE publications shall apply.

2.1.1 SAE Publications—Available from SAE, 400 Commonwealth Drive, Warrendale, PA 15096–0001.

SAE J2099—Standard of Purity for Recycled HFC-134a for Use in Mobile Air-Conditioning Systems

SAE 1991—Standard of Purity for Use in Mobile Air-Conditioning Systems

SAE J2196—Service Hoses for Automotive Air-Conditioning

SAE J2197—Service Hose Fittings for Automotive Air-Conditioning

SAE J2210—HFC-134a (R–134a) Recycling Equipment for Mobile A/C Systems

SAE J1990—Extraction and Recycling Equipment for Mobile A/C Systems

2.1.2 Compressed Gas Association (CGA) Publications—Available from CGA, 1235 Jefferson Davis Highway, Arlington, VA 22202.

CGA Pamphlet S–1.1—Pressure Relief Device Standard

Part 1—Cylinders for Compressed Gases

2.1.3 DOT Publications—Available from the Superintendent of Documents, U.S. Government Printing Office, Washington, D.C. 20402

2.1.4 UL Publications—Available from Underwriters Laboratories, 333 Pfingsten Road, Northbrook, IL 60062–2096.

UL 1769—Cylinder Valves

UL 1963—Refrigerant Recovery/Recycling Equipment

3. Specification and General Description

3.1 The equipment shall be suitable for use in an automotive service garage environment and be capable of continuous operation in ambients from 10 to 49 °C.

3.2 The equipment must be certified that it meets this specification by Underwriters Laboratories Inc. (UL), or by an equivalent Nationally Recognized Testing Laboratory (NRTL).

3.3 The equipment shall have a label which states ''Design Certified by (Certifying Agent) to meet SAE J1770 for recycling CFC-12 and HFC-134a using common refrigerant circuits'', in bold-type letters a minimum of 3 mm in height.

4. Equipment Requirements

4.1 General

4.1.1 The equipment shall be capable of preventing cross contamination to the level required by Section 9.2.1.G before an operation involving a different refrigerant can begin. The equipment must prevent initiation of the recovery operation if the equipment is not set up properly.

4.1.2 If an operator action is required to clear the unit prior to reconnecting for a different refrigerant, the equipment shall be provided with a means which indicates which refrigerant was last processed.

4.1.3 Means shall be provided to prevent recovery from both an CFC-12 and HFC-134a mobile air conditioning system concurrently.

4.1.4 Transfer of recycled refrigerant—Recycled refrigerant for recharging and transfer shall be taken from the liquid phase only.

4.2 Seat Leakage Test

4.2.1 Valves, including electrically operated solenoid valves, that are used to isolate CFC-12 and HFC-134a refrigerant circuits, shall have a seat leakage rate not exceeding 15 g/yr (½ oz/yr) before and after 100,000 cycles of operation. This Endurance Test shall be conducted with HFC-134a at maximum operating pressure as determined by sections 8.1 and 8.2. The Seat Leakage Test shall be performed at 1.5 times this pressure at an ambient of 24 °C.

4.3 Interlocks

4.3.1 Electrical interlock devices used to prevent cross contamination of refrigerant shall be operated for 100,000 cycles and there shall be no failure that would permit cross contamination of refrigerant. Solid state inter lock devices shall comply with the Transient Overvoltage Test and the Fast Transient (Electric Noise) Test contained in the Standard for Tests for Safety Related Controls Employing Solid-State Devices, UL 991.

4.4 Noncondensable Gases

4.4.1 The equipment shall either automatically purge noncondensables (NCGs) if

the acceptable level is exceeded or incorporate a device that indicates to the operator the NCG level has been exceeded. A pressure gauge used to indicate an NCG level shall be readable in 1 psig increments. NCG removal must be part of the normal operation of the equipment and instructions must be provided to enable the task to be accomplished within 30 minutes.

4.4.2 Refrigerant loss from noncondensable gas purging, oil removal, and refrigerant clearing shall not exceed more than 5 percent by weight of the total amount of refrigerant through the equipment as detailed in Sections 8.1, 8.2, and 9.2.

4.5 Filter

4.5.1 A 15 micron filter, or other equivalent means, to remove particulates of 15 micrometers spherical diameter or greater shall be located before any manual electrically operated valves that may cause cross contamination.

4.6 Moisture and Acid

4.6.1 The equipment shall incorporate a desiccant package that must be replaced before saturated with moisture, and whose acid capacity is at least 5% by weight of the dry desiccant.

4.6.2 The equipment shall be provided with a moisture detection means that will reliably indicate when moisture in the HFC-134a exceeds 50 ppm, or in the CFC-12 exceeds 15 ppm, and requires the filter/drier replacement.

5. Operating Instructions

5.1 The equipment manufacturer must provide operating instructions, including proper attainment of vehicle system vacuum (*i.e.*, when to stop the extraction process, and also to stop the extraction process if it is noticed that the A/C system being serviced has a leak), filter/desiccant replacement, and purging of noncondensable gases (air). The instructions shall indicate that the correct sequence of operation be followed so that the equipment can properly remove contaminates to the acceptable level. Also to be included are any other necessary maintenance procedures, source information for replacement parts and repair, and safety precautions.

5.2 The equipment must prominently display the manufacturer's name, address, the type of refrigerant (CFC-12 and HFC-134a), a service telephone number, and the part number for the replacement filter/drier. Operation manuals must cover information for complete maintenance of the equipment to assure proper operation.

6. Safety Requirements

6.1 The equipment must comply with applicable federal, state, and local requirements on equipment related to handling CFC-12 and HFC-134a material. Safety precautions or notices related to the safe operation of the equipment shall be prominently displayed on the equipment and should also state ''CAUTION—SHOULD BE OPERATED BY QUALIFIED PERSONNEL''.

6.2 HFC-134a has been shown to be nonflammable at ambient temperature and atmospheric pressure. The following statement shall be in the operating manual: ''Caution: HFC-134a service equipment or vehicle A/C systems should not be pressure tested or leak tested with compressed air. Some mixtures of air and HFC-134a have been shown to be combustible at elevated pressures (when contained in a pipe or tank). These mixtures may be potentially dangerous, causing injury or property damage. Additional health and safety information may be obtained from refrigerant and lubricant manufacturers.''

7. Functional Description

7.1 General

7.1.1 The equipment must be capable of ensuring recovery of the CFC-12 and HFC-134a from the system being serviced, by reducing the system to a minimum of 102 mm of mercury below atmospheric pressure (*i.e.*, vacuum).

7.1.2 The equipment must be compatible with leak detection material that may be present in the mobile A/C system.

7.2 Shut Off Device

7.2.1 To prevent overcharge, the equipment must be equipped to protect the tank used to store the recycled refrigerant with a shutoff device and a mechanical pressure relief valve.

7.3 Storage Tanks

7.3.1 Portable refillable tanks or containers shall be supplied with this equipment and must be labeled ''HFC-134a'' or ''CFC-12'' as appropriate, meet applicable Department of Transportation (DOT) or NRTL's Standards and be adaptable to existing refrigerant service and charging equipment.

7.3.2 The cylinder valve shall comply with the Standard for Cylinder Valves, UL 1769.

7.3.3 The pressure relief device shall comply with the Pressure Relief Device Standard Part 1—Cylinders for Compressed Gases, CGA Pamphlet S–1.1.

7.3.4 The tank assembly shall be marked to indicate the first retest date, which shall be 5 years after the date of manufacture. The marking shall indicate that retest must be performed every subsequent 5 years. The marking shall be in letters at least 6 mm high.

7.4 Overfill Protection

7.4.1 During operation, the equipment must provide overfill protection to assure that during filling or transfer, the tank or storage container cannot exceed 80% of volume at 21.1 °C of its maximum rating as defined by DOT standards, 49 CFR 173.304 and American Society of Mechanical Engineers.

7.5 Hoses and Connections

7.5.1 Separate inlet and outlet hoses with fittings and separate connections shall be provided for each refrigerant circuit.

7.5.2 All flexible hoses and fittings must meet SAE J2196 (for CFC-12) and SAE J2197 (for HFC-134a).

7.5.3 Service hoses must have shutoff devices located within 30 cm of the connection point to the system being serviced.

7.6 Lubricant Separation

7.6.1 The equipment must be able to separate the lubricant from the removed refrigerant and accurately indicate the amount of lubricant removed during the process, in 30 mL (1 fl oz) units. Refrigerant dissolves in lubricant and, as a result, increases the volume of the recovered lubricant sample. This creates the illusion that more lubricant has been recovered that actually has been. The equipment lubricant measuring system must take into account such dissolved refrigerant removed from the A/C system being serviced to prevent overcharging the vehicle system with lubricant.

(NOTE: Use only new lubricant to replace the amount removed the recycling process. Used lubricant should be discarded per applicable federal, state and local requirements.)

7.6.2 The equipment must be provided with some means, such as a lockout device, which will prevent initiation of the recovery operation after switching to the other refrigerant, if the lubricant has not been drained from the oil separator.

8. Testing

8.0 Equipment shall be tested in sequence as noted in sections 8.1, 8.2 and 9.2. The filter/drier may be replaced only as noted by section 4.6.2.

8.1 CFC-12 Recycling Cycle

8.1.1 The maximum operating pressure of the equipment shall be determined when recycling CFC-12 while conducting the following tests. This pressure is needed for the Seat Leakage Test, Section 4.2.

8.1.2 The equipment must be preconditioned with 13.6 kg of the standard contaminated CFC-12 (see section 8.1.2a) at an ambient of 21 °C before starting the test cycle. Sample amounts shall be 1.13 kg with sample amounts to be repeated every 5 minutes. The sample method fixture, defined in Figure 1 to Appendix A, shall be operated at 21 °C.

8.1.2a Standard contaminated CFC-12 refrigerant shall consist of liquid CFC-12 with 100 ppm (by weight) moisture at 21 °C and 45,000 ppm (by weight) mineral oil 525 suspension viscosity nominal and 770 ppm by weight of noncondensable gases (air).

8.1.3 The high moisture contaminated sample shall consist of CFC-12 vapor with 1000 ppm (by weight) moisture.

8.1.4 The high oil contaminated sample shall consist of CFC-12 with 200,000 ppm (by weight) mineral oil 525 suspension viscosity nominal.

8.1.5 After preconditioning as stated in section 8.1.2, the test cycle is started, processing the following contaminated samples through the equipment.

A. 13.6 kg (1.13 kg per batch) of standard contaminated CFC-12.

B. 1 kg of high oil contaminated CFC-12.

C. 4.5 kg (1.13 kg per batch) of standard contaminated CFC-12.

D. 1 kg of high moisture contaminated CFC-12.

8.1.6 The CFC-12 is to be cleaned to the minimum purity level, as defined in SAE J1991, with the equipment operating in a stable ambient of 10, 21, and 49 °C and processing the samples as defined in section 8.1.5.

8.2 HFC-134a Recycling Cycle

8.2.1 The maximum operating pressure of the equipment shall be determined when recycling HFC-134a while conducting the following tests. This pressure is needed for the Seat Leakage Test, Section 4.2.

8.2.2 The equipment must be preconditioned by processing 13.6 kg of the standard contaminated HFC-134a (see section 8.2.2a) at an ambient of 21 °C before starting the test cycle. 1.13 kg samples are to be processed at 5 minute intervals. The text fixture shown in Figure 1 to Appendix A shall be operated at 21 °C.

8.2.2a The standard contaminated refrigerant shall consist of liquid HFC-134a with 1300 ppm (by weight) moisture (equivalent to saturation at 38°[100 °F]), 45,000 ppm (by weight) HFC-134a compatible lubricant, and 1000 ppm (by weight) of noncondensable gases (air).

8.2.2b The HFC-134a compatible lubricant referred to in section 8.2.2a shall be a polyalkylene glycol based synthetic lubricant or equivalent, which shall contain no more than 1000 ppm by weight of moisture.

8.2.3 Following the preconditioning procedure per section 8.2.2, 18.2 kg of standard contaminated HFC-134a are to be processed by the equipment at each stable ambient temperature of 10, 21, and 49 °C.

8.2.4 The HFC-134a is to be cleaned to the purity level, as defined in SAE J2099.

9. Refrigerant Cross Contamination Test

9.1 General

9.1.1 For test validation, the equipment is to be operated according to the manufacturer's instruction.

9.1.2 The equipment shall clean the contaminated CFC-12 refrigerant to the minimum purity level as defined in Appendix A, when tested in accordance with the requirements in section 8.1.

9.1.3 The equipment shall clean the contaminated HFC-134a refrigerant to the purity

level defined in Appendix C, when tested in accordance with the requirements in section 8.2.

9.2 Test Cycle

9.2.1 The following method shall be used after the tests and requirements in Sections 8.1 and 8.2, respectively, are completed. Following the manufacturer's instructions, the equipment shall be cleared of HFC-134a, prior to beginning step A. The only refrigerant used for this is noted in steps A, C, and E of section 9.2.1. The test fixture shown in Figure 1 to Appendix A shall be used and the test shall be conducted at 10, 21, and 49 °C ambients.

A. A 1.13 kg standard contaminated sample of CFC-12 (see section 8.1.2a) shall be processed by the equipment.

B. Follow manufacturer's instructions to clear the equipment of CFC-12 before processing HFC-134a.

C. Process a 1.13 kg, standard contaminated sample of HFC-134a (see section 8.2.2a) through the equipment.

D. Follow manufacturer's instructions to clear the equipment of HFC-134a before processing CFC-12.

E. Process a 1.13 kg standard contaminated sample of CFC-12 (see section 8.1.2a) through the equipment.

F. Follow manufacturer's instructions to clear the equipment of CFC-12.

G. The amount of cross contaminated refrigerant, as determined by gas chromatography, in samples processed during steps C and E of section 9.2.1., shall not exceed 0.5 percent by weight.

10. Sample Analysis

10.1 General

10.1.1 The processed contaminated samples shall be analyzed according to the following procedure.

10.2 Quantitative Determination of Moisture

10.2.1 The recycled liquid phase sample of refrigerant shall be analyzed for moisture content via Karl Fischer coulometer titration or an equivalent method. The Karl Fischer apparatus is an instrument for precise determination of small amounts of water dissolved in liquid and/or gas samples.

10.2.2 In conducting the test, a weighed sample of 30 to 130 g is vaporized directly into the Karl Fischer anolyte. A coulometer titration is conducted and the results are calculated and displayed as parts per million moisture (weight).

10.3 Determination of Percent Lubricant

10.3.1 The amount of lubricant in the recycled sample of refrigerant/lubricant is to be determined by gravimetric analysis.

10.3.2 Following venting of noncondensable, in accordance with the manufacturer's operating instructions, the refrigerant container shall be shaken for 5 minutes prior to extracting samples for test.

10.3.3 A weighed sample of 175 to 225 g of liquid refrigerant/lubricant is allowed to evaporate at room temperature. The percent lubricant is to be calculated from the weight of the original sample and the residue remaining after the evaporation.

10.4 Noncondensable Gas

10.4.1 The amount of noncondensable gas is to be determined by gas chromatography. A sample of vaporized refrigerant liquid shall be separated and analyzed by gas chromatography. A Propak Q column at 130 °C and a hot wire detector may be used for analysis.

10.4.2 This test shall be conducted on liquid phase samples of recycled refrigerant taken from a full container as defined in 7.4 within 30 minutes following the proper venting of noncondensable gases.

10.4.3 The samples shall be shaken for at least 15 minutes prior to testing while at a temperature of 24 °C ±2.8 °C.

10.5 Refrigerant Cross Contamination

10.5.1 The amount of cross contamination of CFC-12 in HFC-134a or HFC-134a in CFC-12 shall not exceed 0.5 percent by weight as determined by gas chromatography. A sample of vaporized refrigerant liquid shall be separated and analyzed by gas chromatography. A 1% SP–1000 on Carbopack B (60/80 mesh) column may be used for the analysis.

[62 FR 68053, Dec. 30, 1997]

APPENDIX F TO SUBPART B OF PART 82—STANDARD FOR RECOVER-ONLY EQUIPMENT THAT EXTRACTS A SINGLE, SPECIFIC REFRIGERANT OTHER THAN CFC-12 OR HFC-134a

Foreword

These specifications are for equipment that recover, but does not recycle, any single, specific automotive refrigerant other than CFC-12 or HFC-134a, including a blend refrigerant.

1. Scope

The purpose of this standard is to provide equipment specifications for the recovery of any single, specific refrigerant other than CFC-12 or HFC-134a, including a blend refrigerant, which are either (1) to be returned to a refrigerant reclamation facility that will process the refrigerant to ARI Standard 700–93 or equivalent new product specifications at a minimum, or (2) to be recycled in approved refrigerant recycling equipment, or (3) to be destroyed. This standard applies to equipment used to service automobiles, light trucks, and other vehicles with similar air conditioning systems.

2. References

2.1 Applicable Documents—The following publications form a part of this specification

to the extent specified. The latest issue of SAE publications shall apply.

2.1.1 SAE Publications—Available from SAE, 400 Commonwealth Drive, Warrendale, PA 15096–0001. SAE J639—Vehicle Service Coupling. SAE J2196—Service Hoses for Automotive Air-Conditioning (fittings modified)

2.1.2 ARI Publication—Available from Air Conditioning and Refrigeration Institute, 1501 Wilson Boulevard, Sixth Floor, Arlington, VA 22209. ARI 700–93—Specifications for Fluorocarbon Refrigerants.

2.1.3 Compressed Gas Association (CGA) Publications—Available from CGA, 1235 Jefferson Davis Highway, Arlington, VA 22202. CGA Pamphlet S–1.1—Pressure Relief Device Standard Part 1—Cylinders for Compressed Gases.

2.1.4 DOT Publications—Available from the Superintendent of Documents, U.S. Government Printing Office, Washington, D.C. 20402.

DOT Standard, 49 CFR 173.304—Shippers—General Requirements for Shipments and Packagings.

2.1.5 UL Publications—Available from Underwriters Laboratories, 333 Pfingsten Road, Northbrook, IL 60062–2096.

UL 1769—Cylinder Valves.

UL 1963—Refrigerant Recovery Recycling Equipment.

3. Specifications and General Description

3.1 The equipment must be able to extract from a mobile air conditioning system the refrigerant other than CFC-12 or HFC-134a to which the equipment is dedicated.

3.2 The equipment shall be suitable for use in an automotive service garage environment as defined in section 6.8.

3.3 The equipment discharge or transfer fitting shall be unique to prevent the unintentional use of the extracted refrigerant for recharging auto air conditioners.

3.4 Equipment Certification-The equipment shall be certified by Underwriters Laboratories or an—equivalent certifying laboratory to meet this standard.

3.5 Label Requirements—The equipment shall have a label ''Designed Certified by (Company Name) to meet EPA requirements for use only with (the applicable refrigerant). The refrigerant from this equipment must be processed to ARI 700–93 specifications or equivalent new product specifications before reuse in a mobile air-conditioning system.'' The minimum letter size shall be bold type 3 mm in height.

4. Safety Requirements

4.1 The equipment must comply with applicable federal, state, and local requirements on equipment related to the handling of the applicable refrigerant material. Safety precautions or notices or labels related to the safe operation of the equipment shall also be prominently displayed on the equipment and should state ''CAUTION—SHOULD BE OPERATED BY CERTIFIED PERSONNEL.'' The safety identification shall be located on the front near the controls.

4.2 The equipment must comply with applicable safety standards for electrical and mechanical requirements.

5. Operating Instructions

5.1 The equipment manufacturer must provide operating instructions that include information equivalent to that required by SAE J1629, necessary maintenance procedures, and source information for replacement parts and repair.

5.1.1 The instruction manual shall include the following information on the lubricant removed: Only new lubricant, as identified by the system manufacturer, should be replaced in the air conditioning system. Removed lubricant from the system and/or the equipment shall be disposed on in accordance with the applicable federal, state, and local procedures and regulations.

5.2 The equipment must prominently display the manufacturer's name, address, the type of refrigerant it is designed to extract, a service telephone number, and any items that require maintenance or replacement that affect the proper operation of the equipment. Operation manuals must cover information for complete maintenance of the equipment to assure proper operation.

6.1 Functional Description

6.1 The equipment must be capable of ensuring removal of refrigerant from the system being serviced by reducing the system pressure to a minimum of 102 mm (4 in) of mercury below atmospheric pressure (*i.e.*, to a vacuum). To prevent system delayed outgassing, the unit must have a device that assures that the refrigerant has been recovered from the air-conditioning system.

6.1.1 Testing laboratory certification of the equipment capability is required which shall process contaminated refrigerant samples at specific temperatures.

6.2 The equipment must be preconditioned by processing 13.6 kg (30 lb) of the standard contaminated refrigerant at an ambient of 21 °C (70 °F) before starting the test cycle. Sample amounts are not to exceed 1.13 kg (2.5 lb) with sample amounts to be processed at 5 min. intervals. The test method fixture, depicted in Figure 1 to appendix A of this subpart, shall be operated at 21 °C (70 °F). Contaminated refrigerant samples shall be processed at ambient temperatures of 10 and 49 °C, without equipment shutting due to any safety devices employed in this equipment.

6.2.1 Standard contaminated refrigerant, 13.6 kg (30 lb) sample size, shall consist of liquid refrigerant with 1000 ppm (by weight)

moisture at 21 °C and 45,000 ppm (by weight) of oil (total of one-third mineral oil 525 suspension nominal, one-third PAG with 100 cSt viscosity at 40 °C or equivalent, and one-third POE with 68 cSt viscosity at 40 °C or equivalent) and 1000 ppm by weight of noncondensable gases (air). Refrigerant shall be identified prior to the recovery process to ±2% of the original manufacturer's formulation submitted to, and accepted by, EPA under its Significant New Alternatives Policy program, with the exception that any flammable components shall be identified to ±1%.

6.3 Portable refillable containers used in conjunction with this equipment must meet applicable DOT Standards.

6.3.1 The container color must be gray with a yellow top to identify that it contains used refrigerant. It must be permanently marked on the outside surface in black print at least 20 mm high ''DIRTY [NAME OF REFRIGERANT]—DO NOT USE, MUST BE PROCESSED''.

6.3.2 The portable refillable container shall have a unique thread connection for the specific refrigerant.

6.3.3 During operation, the equipment shall provide overfill protection to assure that the storage container liquid fill does not exceed 80% of the tank's rated volume at 21 °C per DOT Standard, 49 CFR 173.304, and the American Society of Mechanical Engineers.

6.4 Additional Storage Tank Requirements

6.4.1 The cylinder valve shall comply with UL 1769.

6.4.2 The pressure relief device shall comply with CGA Pamphlet S–1.1.

6.4.3 The container assembly shall be marked to indicate the first retest date, which shall be 5 years after date of manufacture. The marking shall indicate that retest must be performed every subsequent 5 years. The marking shall be in letters at least 6 mm high.

6.5 All flexible hoses must meet SAE J2196 for service hoses except that fittings shall be unique to the applicable refrigerant.

6.6 Service hoses must have shutoff devices located within 30 cm of the connection point to the system being serviced to minimize introduction of noncondensable gases into the recovery equipment during connection and the release of the refrigerant during disconnection.

6.7 The equipment must be able to separate the lubricant from the recovered refrigerant and accurately indicate the amount removed from the simulated automotive system during processing in 30 mL units.

6.7.1 The purpose of indicating the amount of lubricant is to ensure that a proper amount of new lubricant is returned to the mobile air conditioning system for compressor lubrication.

6.7.2 Refrigerant dissolved in this lubricant must be accounted for to prevent system lubricant overcharge of the mobile air-conditioning system.

6.8 The equipment must be capable of continuous operation in temperatures of 10 to 49 °C and must comply with 6.1 and 6.2.

7. For test validation, the equipment is to be operated according to the manufacturer's instructions.

Application

The purpose of this standard is to provide equipment specifications for the recovery of any refrigerant other than CFC-12 or HFC-134a for return to a refrigerant reclamation facility that will process it to ARI Standard 700–93 (or for recycling in other EPA approved recycling equipment, in the event that EPA in the future designates a standard for equipment capable of recycling refrigerants other than CFC-12 or HFC-134a).

Reference Section

SAE J639—Vehicle Service Coupling
SAE J2196—Service Hoses for Automotive Air-Conditioning
ARI 700–93—Specifications for Fluorocarbon Refrigerants
CGA Pamphlet S–1.1—Pressure Relief Device Standard Part 1—Cylinders for Compressed Gases
UL 1769—Cylinder Valves
49 CFR 173.304—Shippers—General Requirements for Shipment and Packagings

[62 FR 68055, Dec. 30, 1997]

Subpart C—Ban on Nonessential Products Containing Class I Substances and Ban on Nonessential Products Containing or Manufactured With Class II Substances

SOURCE: 58 FR 69675, Dec. 30, 1993, unless otherwise noted.

§ 82.60 Purpose.

The purpose of this subpart is to implement the requirements of sections 608 and 610 of the Clean Air Act as amended in 1990 on emission reductions and nonessential products.

§ 82.62 Definitions.

For purposes of this subpart:

Chlorofluorocarbon means any substance listed as Class I group I or Class I group III in 40 CFR part 82, appendix A to subpart A.

Class II Substance means any substance designated as class II in 40 CFR part 82, appendix B to subpart A.

Commercial, when used to describe the purchaser of a product, means a person that uses the product in the purchaser's business or sells it to another person and has one of the following identification numbers:

(1) A federal employer identification number;

(2) A state sales tax exemption number;

(3) A local business license number; or

(4) A government contract number.

Consumer, when used to describe a person taking action with regard to a product, means the ultimate purchaser, recipient or user of a product.

Distributor, when used to describe a person taking action with regard to a product means:

(1) The seller of a product to a consumer or another distributor; or

(2) A person who sells or distributes that product in interstate commerce for export from the United States.

Foam Insulation Product, when used to describe a product containing or consisting of plastic foam, means a product containing or consisting of the following types of foam:

(1) Closed cell rigid polyurethane foam;

(2) Closed cell rigid polystyrene boardstock foam;

(3) Closed cell rigid phenolic foam; and

(4) Closed cell rigid polyethylene foam when such foam is suitable in shape, thickness and design to be used as a product that provides thermal insulation around pipes used in heating, plumbing, refrigeration, or industrial process systems.

Hydrochlorofluorocarbon means any substance listed as class II in 40 CFR part 82, appendix B to subpart A.

Initial Inventory means that the original product has completed all of its manufacturing processes and is ready for sale by the manufacturer. Products in initial inventory may be subsequently incorporated into another product by a different manufacturer after purchase. To continue selling products after the effective date of the provisions, the manufacturer or distributor must be able to show, upon request by EPA, that the product was in fact manufactured, and thus placed into initial inventory prior to the effective date. Shipping forms, lot numbers, manufacturer date stamps or codes, invoices, or the like are normally kept records that could be maintained from the time the product was put into initial inventory and may be used to demonstrate when a product was placed in initial inventory.

Polyurethane Foam System means an item consisting of two transfer pumps that deliver ingredients (polyisocyanate or isocyanate from one side and a mixture including the blowing agent, catalysts, flame retardants, and/or stabilizers from the other side) to a metering/mixing device which allows the components to be delivered in the appropriate proportions.

Product means an item or category of items manufactured from raw or recycled materials which is used to perform a function or task.

Release means to emit into the environment during the manufacture, use, storage or disposal of a product.

Space Vehicles means a man-made device, either manned or unmanned, designed for operation beyond earth's atmosphere. This definition includes integral equipment such as models, mock-ups, prototypes, molds, jigs, tooling, hardware jackets, and test coupons. Also included is auxiliary equipment associated with test, transport, and storage, which through contamination can compromise the space vehicle performance.

[58 FR 69675, Dec. 30, 1993, as amended at 61 FR 64427, Dec. 4, 1996; 66 FR 57522, Nov. 15, 2001; 85 FR 15300, Mar. 17, 2020]

§ 82.64 Prohibitions.

(a) Effective February 16, 1993, no person may sell or distribute, or offer to sell or distribute, in interstate commerce any of the products identified as being nonessential in § 82.66(a).

(b) Effective February 16, 1993, no person may sell or distribute, or offer to sell or distribute, in interstate commerce any of the products specified in § 82.66(b) to a person who does not provide proof of being a commercial purchaser, as defined under § 82.62.

(c) Effective January 17, 1994, no person may sell or distribute, or offer to sell or distribute, in interstate commerce any of the products identified as being nonessential in § 82.66(c) or § 82.66(d) except as permitted under § 82.65(g).

(d) Except as permitted under § 82.65, effective January 1, 1994, no person may sell or distribute, or offer for sale or distribution, in interstate commerce any product identified as being nonessential in § 82.70(a) or § 82.70(c).

(e) Except as permitted under § 82.65, effective January 1, 1994, no person may sell or distribute, or offer to sell or distribute, in interstate commerce any of the products specified in § 82.70(b) to a person who does not provide proof of being a commercial purchaser, as defined under § 82.62.

(f) Except as permitted under § 82.65(d), effective January 1, 1996, no person may sell or distribute, or offer for sale or distribution, in interstate commerce any product identified as being nonessential in § 82.70(c)(ii).

(g) It is a violation of this subpart to sell or distribute, or offer for sale or distribution, products effected by the provisions of § 82.68 if the seller knew or should have known that the purchaser was purchasing the product for a prohibited application.

(h) No person may sell or distribute, or offer to sell or distribute, in interstate commerce any of the products identified as being nonessential in § 82.66(f).

[58 FR 69675, Dec. 30, 1993, as amended at 85 FR 15300, Mar. 17, 2020]

§ 82.65 Temporary exemptions.

(a) Any person may sell or distribute, or offer to sell or distribute, in interstate commerce, at any time, any products specified as nonessential in § 82.70 which are manufactured and placed into initial inventory by December 31, 1993.

(b) Any person may sell or distribute, or offer to sell or distribute, in interstate commerce, at any time, any products specified as nonessential in § 82.70 which are manufactured and placed into initial inventory within the date 90 days after the effective date of any federal approvals required for product reformulation, where application for the required approval was timely and properly submitted to the approving federal agency prior to January 1, 1994.

(c)(1) Any person may sell or distribute or offer to sell or distribute, in interstate commerce, at any time, any products specified as nonessential in § 82.70 which are manufactured and placed into initial inventory within 45 days after the receipt of denial by any federal agency of an application for reformulation where initial application for the required approval was timely and properly submitted to the approving federal agency prior to January 1, 1994.

(2) If, within 45 days of receipt of a denial of an application for reformulation, a person submits a new viable application for federal approval of a reformulation, that person may continue to sell and distribute, or offer to sell and distribute until 45 days of denial of that application.

(d) Any person may sell or distribute, or offer to sell or distribute, in interstate commerce, at any time, any integral skin foam utilized to provide for motor vehicle safety in accordance with Federal Motor Vehicle Safety Standards, which are manufactured and placed into initial inventory prior to January 1, 1996.

(e) Any person selling or distributing, or offering to sell or distribute, any product specified in this section after January 1, 1994, or January 1, 1996 for paragraph (d) of this section, or after January 17, 1994 for any product specified in paragraph (g) of this section, must retain proof that such product was manufactured and placed into initial inventory before the relevant date specified in this section. Such proof may take the form of shipping forms, lot numbers, manufacturer date stamps, invoices or equivalent business records.

(f) Any person may sell or distribute, or offer to sell or distribute, in interstate commerce, any aircraft pesticide containing class I until an alternative aircraft pesticide containing class II is available in interstate commerce.

(g) Any person may sell or distribute, or offer to sell or distribute, in interstate commerce, at any time, any replacement part that was manufactured with, or contains a class I substance or

was packaged in material that was manufactured with or contains a class I substance only if:

(1) The replacement part was manufactured for use in a single model of a product; and

(2) The replacement part and product model are no longer manufactured; and

(3) The replacement part was placed into initial inventory prior to April 16, 1992.

(h) Any person may sell or distribute, or offer to sell or distribute, in interstate commerce, at any time, any air-conditioning or refrigeration products specified as nonessential in § 82.66(e) that are manufactured and placed into initial inventory by January 14, 2002.

(i) Any person may sell or distribute, or offer to sell or distribute, in interstate commerce, at any time, any integral skin foam products manufactured with a Class I substance for use in commercial aviation and specified as nonessential in § 82.66(c) that are manufactured and placed into initial inventory by January 14, 2002.

[58 FR 69675, Dec. 30, 1993, as amended at 66 FR 57522, Nov. 15, 2001]

§ 82.66 Nonessential Class I products and exceptions.

The following products which release a Class I substance (as defined in 40 CFR part 82, appendix A to subpart A) are identified as being nonessential, and subject to the prohibitions specified under § 82.64—

(a) Any plastic party streamer or noise horn which is propelled by a chlorofluorocarbon, including but not limited to—

(1) String confetti;

(2) Marine safety horns;

(3) Sporting event horns;

(4) Personal safety horns;

(5) Wall-mounted alarms used in factories or other work areas; and

(6) Intruder alarms used in homes or cars.

(b) Any cleaning fluid for electronic and photographic equipment which contains a chlorofluorocarbon:

(1) Including but not limited to liquid packaging, solvent wipes, solvent sprays, and gas sprays; and

(2) Except for those sold or distributed to a commercial purchaser.

(c) Any plastic foam product which is manufactured with or contains a Class I substance; except any plastic foam product blown with CFC-11, but which contains no other Class I substances and where this product is used to provide thermal protection to external tanks for space vehicles;

(d) Any aerosol product or other pressurized dispenser, other than those banned in § 82.64(a) or § 82.64(b), which contains a chlorofluorocarbon,

(1) Including but not limited to household, industrial, automotive and pesticide uses,

(2) Except—

(i) Medical devices listed in 21 CFR 2.125(e);

(ii) Lubricants, coatings or cleaning fluids for electrical or electronic equipment, which contain CFC-11, CFC-12, or CFC-113 for solvent purposes, but which contain no other CFCs;

(iii) Lubricants, coatings or cleaning fluids used for aircraft maintenance, which contain CFC-11 or CFC-113 as a solvent, but which contain no other CFCs;

(iv) Mold release agents used in the production of plastic and elastomeric materials, which contain CFC-11 or CFC-113 as a solvent, but which contain no other CFCs, and/or mold release agents that contain CFC-12 as a propellant, but which contain no other CFCs;

(v) Spinnerette lubricant/cleaning sprays used in the production of synthetic fibers, which contain CFC-114 as a solvent, but which contain no other CFCs, and/or spinnerette lubricant/cleaning sprays which contain CFC-12 as a propellant, but which contain no other CFCs;

(vi) Document preservation sprays which contain CFC–113 as a solvent, but which contain no other CFCs, and/or document preservation sprays which contain CFC–12 as a propellant, but which contain no other CFCs, and which are used solely on thick books, books with coated or dense paper and tightly bound documents;

(e) Any air-conditioning or refrigeration appliance as defined in the Clean Air Act (CAA) 601(1) that contains a Class I substance used as a refrigerant; and

(f) Any polyurethane foam system that contains any CFC.

[58 FR 69675, Dec. 30, 1993, as amended at 66 FR 57522, Nov. 15, 2001; 85 FR 15300, Mar. 17, 2020]

§ 82.68 Verification and public notice requirements.

(a) Effective February 16, 1993, any person who sells or distributes any cleaning fluid for electronic and photographic equipment which contains a chlorofluorocarbon must verify that the purchaser is a commercial entity as defined in § 82.62. In order to verify that the purchaser is a commercial entity, the person who sells or distributes this product must request documentation that proves the purchaser's commercial status by containing one or more of the commercial identification numbers specified in § 82.62(b). The seller or distributor must have a reasonable basis for believing that the information presented by the purchaser is accurate.

(b) Effective February 16, 1993, any person who sells or distributes any cleaning fluid for electronic and photographic equipment which contains a chlorofluorocarbon must prominently display a sign where sales of such product occur which states: ''It is a violation of federal law to sell, distribute, or offer to sell or distribute, any chlorofluorocarbon-containing cleaning fluid for electronic and photographic equipment to anyone who is not a commercial user of this product. The penalty for violating this prohibition can be up to $25,000 per sale. Individuals purchasing such products must present proof of their commercial status in accordance with § 82.68(a).''

(c) Effective January 1, 1994, any person who sells or distributes any aerosol or pressurized dispenser of cleaning fluid for electronic and photographic equipment which contains a class II substance must verify that the purchaser is a commercial entity as defined in § 82.62(b). In order to verify that the purchaser is a commercial entity, the person who sells or distributes this product must request documentation that proves the purchaser's commercial status by containing one or more of the commercial identification numbers specified in § 82.62(b).

(d) Effective January 1, 1994, any person who sells or distributes any aerosol or other pressurized dispenser of cleaning fluid for electronic and photographic equipment which contains a class II substance must prominently display a sign where sales of such product occur which states: ''It is a violation of federal law to sell, distribute, or offer to sell or distribute, any aerosol hydrochlorofluorocarbon-containing cleaning fluid for electronic and photographic equipment to anyone who is not a commercial user of this product. The penalty for violating this prohibition can be up to $25,000 per unit sold. Individuals purchasing such products must present proof of their commercial status in accordance with § 82.68(c).''

(e) Effective January 1, 1994, in order to satisfy the requirements under § 82.68 (b) and (d), any person who sells or distributes cleaning fluids for electronic and photographic equipment which contain a class I substance and those aerosol or pressurized dispensers of cleaning fluids which contain a class II substance, may prominently display one sign where sales of such products occur which states: ''It is a violation of federal law to sell, distribute, or offer to sell or distribute, any chlorofluorocarbon-containing cleaning fluid for electronic and photographic equipment or aerosol hydrochlorofluorocarbon-containing cleaning fluid for electronic and photographic equipment to anyone who is not a commercial user of this product. The penalty for violating this prohibition can be up to $25,000 per unit sold. Individuals purchasing such products must present proof of their commercial status in accordance with 40 CFR 82.68(a) or 82.68(c).''

(f)–(g) [Reserved]

(h) Effective January 1, 1994, any person who sells or distributes any mold release agents containing a class II substance as a propellant must provide written notification to the purchaser prior to the sale that ''It is a violation of federal law to sell mold release agents containing hydrochlorofluorocarbons as propellants to anyone, except for use in applications where no other alternative except a class I substance is available.

The penalty for violating this prohibition can be up to $25,000 per unit sold.'' Written notification may be placed on sales brochures, order forms, invoices and the like.

(i) Effective January 1, 1994, any person who sells or distributes any wasp and hornet spray containing a class II substance must provide written notification to the purchaser prior to the sale that ''it is a violation of federal law to sell or distribute wasp and hornet sprays containing hydrochlorofluorocarbons as solvents to anyone, except for use near high-tension power lines where no other alternative except a class I substance is available. The penalty for violating this prohibition can be up to $25,000 per unit sold.'' Written notification may be placed on sales brochures, order forms, invoices and the like.

[58 FR 69675, Dec. 30, 1993, as amended at 61 FR 64427, Dec. 4, 1996]

§ 82.70 Nonessential Class II products and exceptions.

The following products which release a class II substance (as designated as class II in 40 CFR part 82, appendix B to subpart A) are identified as being nonessential and the sale or distribution of such products is prohibited under § 82.64 (d), (e), or (f)—

(a) Any aerosol product or other pressurized dispenser which contains a class II substance:

(1) Including but not limited to household, industrial, automotive and pesticide uses;

(2) Except—

(i) Medical devices listed in 21 CFR 2.125(e);

(ii) Lubricants, coatings or cleaning fluids for electrical or electronic equipment, which contain class II substances for solvent purposes, but which contain no other class II substances;

(iii) Lubricants, coatings or cleaning fluids used for aircraft maintenance, which contain class II substances for solvent purposes but which contain no other class II substances;

(iv) Mold release agents used in the production of plastic and elastomeric materials, which contain class II substances for solvent purposes but which contain no other class II substances, and/or mold release agents that contain HCFC-22 as a propellant where evidence of good faith efforts to secure alternatives indicates that, other than a class I substance, there are no suitable alternatives;

(v) Spinnerette lubricants/cleaning sprays used in the production of synthetic fibers, which contain class II substances for solvent purposes and/or contain class II substances for propellant purposes;

(vi) Document preservation sprays which contain HCFC-141b as a solvent, but which contain no other class II substance; and/or which contain HCFC-22 as a propellant, but which contain no other class II substance and which are used solely on thick books, books with coated, dense or paper and tightly bound documents;

(vii) Portable fire extinguishing equipment used for non-residential applications; and

(viii) Wasp and hornet sprays for use near high-tension power lines that contain a class II substance for solvent purposes only, but which contain no other class II substances.

(b) Any aerosol or pressurized dispenser cleaning fluid for electronic and photographic equipment which contains a class II substance, except for those sold or distributed to a commercial purchaser.

(c) Any plastic foam product which contains, or is manufactured with, a class II substance,

(1) Including but not limited to household, industrial, automotive and pesticide uses,

(2) Except—

(i) Any foam insulation product, as defined in § 82.62(h); and

(ii) Integral skin foam utilized to provide for motor vehicle safety in accordance with Federal Motor Vehicle Safety Standards until January 1, 1996, after which date such products are identified as nonessential and may only be sold or distributed or offered for sale or distribution in interstate commerce in accordance with § 82.65(d).

[58 FR 69675, Dec. 30, 1993, as amended at 61 FR 64427, Dec. 4, 1996]

Subpart D—Federal Procurement

SOURCE: 58 FR 54898, Oct. 22, 1993, unless otherwise noted.

§ 82.80 Purpose and scope.

(a) The purpose of this subpart is to require Federal departments, agencies, and instrumentalities to adopt procurement regulations which conform to the policies and requirements of title VI of the Clean Air Act as amended, and which maximize the substitution in Federal procurement of safe alternatives, as identified under section 612 of the Clean Air Act, for class I and class II substances.

(b) The regulations in this subpart apply to each department, agency, and instrumentality of the United States.

§ 82.82 Definitions.

(a) *Class I substance* means any substance designated as class I by EPA pursuant to 42 U.S.C. 7671(a), including but not limited to chlorofluorocarbons, halons, carbon tetrachloride and methyl chloroform.

(b) *Class II substance* means any substance designated as class II by EPA pursuant to 42 U.S.C. 7671(a), including but not limited to hydrochlorofluorocarbons.

(c) *Controlled substance* means a class I or class II ozone-depleting substance.

(d) *Department, agency and instrumentality of the United States* refers to any executive department, military department, or independent establishment within the meaning of 5 U.S.C. 101, 102, and 104(1), respectively, any wholly owned Government corporation, the United States Postal Service and Postal Rate Commission, and all parts of and establishments within the legislative and judicial branches of the United States.

§ 82.84 Requirements.

(a) No later than October 24, 1994, each department, agency and instrumentality of the United States shall conform its procurement regulations to the requirements and policies of title VI of the Clean Air Act, 42 U.S.C. 7671–7671g. Each such regulation shall provide, at a minimum, the following:

(1) That in place of class I or class II substances, or of products made with or containing such substances, safe alternatives identified under 42 U.S.C. 7671k (or products made with or containing such alternatives) shall be substituted to the maximum extent practicable. Substitution is not required for class II substances identified as safe alternatives under 42 U.S.C. 7671k, or for products made with or containing such substances, and such substances may be used as substitutes for other class I or class II substances.

(2) That, consistent with the phase-out schedules for ozone-depleting substances, no purchases shall be made of class II substances, or products containing class II substances, for the purpose of any use prohibited under 42 U.S.C. 7671d(c);

(3) That all active or new contracts involving the performance of any service or activity subject to 42 U.S.C. 7671g or 7671h or regulations promulgated thereunder include, or be modified to include, a condition requiring the contractor to ensure compliance with all requirements of those sections and regulations;

(4) That no purchases shall be made of products whose sale is prohibited under 42 U.S.C. 7671h, except when they will be used by persons certified under section 609 to service vehicles, and no purchase shall be made of nonessential products as defined under 42 U.S.C. 7671i;

(5) That proper labeling under 42 U.S.C. 7671j shall be a specification for the purchase of any product subject to that section.

(b) For agencies subject to the Federal Acquisition Regulation, 48 CFR part 1, amendment of the FAR, consistent with this subpart, shall satisfy the requirement of this section.

§ 82.86 Reporting requirements.

(a) No later than one year after October 22, 1993, each agency, department, and instrumentality of the United States shall certify to the Office of Management and Budget that its procurement regulations have been amended in accordance with this section.

(b) Certification by the General Services Administration that the Federal Acquisition Regulation has been amended in accordance with this section shall constitute adequate certification for purposes of all agencies subject to the Federal Acquisition Regulation.

Subpart E—The Labeling of Products Using Ozone-Depleting Substances

SOURCE: 60 FR 4020, Jan. 19, 1995, unless otherwise noted.

§ 82.100 Purpose.

The purpose of this subpart is to require warning statements on containers of, and products containing or manufactured with, certain ozone-depleting substances, pursuant to section 611 of the Clean Air Act, as amended.

§ 82.102 Applicability.

(a) In the case of substances designated as class I or class II substances as of February 11, 1993, the applicable date of the requirements in this paragraph (a) is May 15, 1993. In the case of any substance designated as a class I or class II substance after February 11, 1993, the applicable date of the requirements in this paragraph (a) is one year after the designation of such substance as a class I or class II substance unless otherwise specified in the designation. On the applicable date indicated in this paragraph (a), the requirements of this subpart shall apply to the following containers and products except as exempted under paragraph (c) of this section:

(1) All containers in which a class I or class II substance is stored or transported.

(2) All products containing a class I substance.

(3) All products directly manufactured with a process that uses a class I substance, unless otherwise exempted by this subpart or, unless the Administrator determines for a particular product that there are no substitute products or manufacturing processes for such product that do not rely on the use of a class I substance, that reduce overall risk to human health and the environment, and that are currently or potentially available. If the Administrator makes such a determination for a particular product, then the requirements of this subpart are effective for such product no later than January 1, 2015.

(b) Applicable January 1, 2015 in any case, or one year after any determination between May 15, 1993 and January 1, 2015, by the Administrator for a particular product that there are substitute products or manufacturing processes for such product that do not rely on the use of a class I or class II substance, that reduce the overall risk to human health and the environment, and that are currently or potentially available, the requirements of this subpart shall apply to the following:

(1) All products containing a class II substance.

(2) All products manufactured with a process that uses a class II substance.

(c) The requirements of this subpart shall not apply to products manufactured prior to May 15, 1993, provided that the manufacturer submits documentation to EPA upon request showing that the product was manufactured prior to that date.

§ 82.104 Definitions.

(a) *Class I substance* means any substance designated as class I in 40 CFR part 82, appendix A to subpart A, including chlorofluorocarbons, halons, carbon tetrachloride and methyl chloroform and any other substance so designated by the Agency at a later date.

(b) *Class II substance* means any substance designated as class II in 40 CFR part 82, appendix A to subpart A, including hydrochlorofluorocarbons and any other substance so designated by the Agency at a later date.

(c) *Completely destroy* means to cause the destruction of a controlled substance by one of the destruction processes approved by the Parties and listed in § 82.3 at a demonstrable destruction efficiency of 98 percent or more or a greater destruction efficiency if required under other applicable Federal regulations.

(d) *Consumer* means a commercial or non-commercial purchaser of a product or container that has been introduced into interstate commerce.

(e) *Container* means the immediate vessel in which a controlled substance is stored or transported.

(f) *Container containing* means a container that physically holds a controlled substance within its structure that is intended to be transferred to another container, vessel or piece of

equipment in order to realize its intended use.

(g) *Controlled substance* means a class I or class II ozone-depleting substance.

(h) *Destruction* means the expiration of a controlled substance to the destruction efficiency actually achieved, unless considered completely destroyed as defined in this section. Such destruction might result in a commercially useful end product but such usefulness would be secondary to the act of destruction. Destruction must be achieved using one of the controlled processes approved by the Parties and listed in the definition of *destruction* in § 82.3.

(i) *Distributor* means a person to whom a product is delivered or sold for purposes of subsequent resale, delivery or export.

(j) *Export* means the transport of virgin, used, or recycled class I or class II substances or products manufactured or containing class I or class II substances from inside the United States or its territories to persons outside the United States or its territories, excluding United States military bases and ships for on-board use.

(k) *Exporter* means the person who contracts to sell class I or class II substances or products manufactured with or containing class I or class II substances for export or transfers such substances or products to his affiliate in another country.

(l) *Import* means to land on, bring into, or introduce into, or attempt to land on, bring into, or introduce into any place subject to the jurisdiction of the United States whether or not such landing, bringing, or introduction constitutes an importation within the meaning of the customs laws of the United States, with the exception of temporary off-loading of products manufactured with or containers containing class I or class II substances from a ship are used for servicing of that ship.

(m) *Importer* means any person who imports a controlled substance, a product containing a controlled substance, a product manufactured with a controlled substance, or any other chemical substance (including a chemical substance shipped as part of a mixture or article), into the United States. ''Importer'' includes the person primarily liable for the payment of any duties on the merchandise or an authorized agent acting on his or her behalf. The term also includes, as appropriate:

(1) The consignee;

(2) The importer of record;

(3) The actual owner if an actual owner's declaration and superseding bond has been filed; or

(4) The transferee, if the right to draw merchandise in a bonded warehouse has been transferred.

(n) *Interstate commerce* means the distribution or transportation of any product between one state, territory, possession or the District of Columbia, and another state, territory, possession or the District of Columbia, or the sale, use or manufacture of any product in more than one state, territory, possession or District of Columbia. The entry points for which a product is introduced into interstate commerce are the release of a product from the facility in which the product was manufactured, the entry into a warehouse from which the domestic manufacturer releases the product for sale or distribution, and at the site of United States Customs clearance.

(o) *Manufactured with a controlled substance* means that the manufacturer of the product itself used a controlled substance directly in the product's manufacturing, but the product itself does not contain more than trace quantities of the controlled substance at the point of introduction into interstate commerce. The following situations are excluded from the meaning of the phrase ''manufactured with'' a controlled substance:

(1) Where a product has not had physical contact with the controlled substance;

(2) Where the manufacturing equipment or the product has had physical contact with a controlled substance in an intermittent manner, not as a routine part of the direct manufacturing process;

(3) Where the controlled substance has been transformed, except for trace quantities; or

(4) Where the controlled substance has been completely destroyed.

(p) *Potentially available* means that adequate information exists to make a determination that the substitute is technologically feasible, environmentally acceptable and economically viable.

(q) *Principal display panel (PDP)* means the entire portion of the surface of a product, container or its outer packaging that is most likely to be displayed, shown, presented, or examined under customary conditions of retail sale. The area of the PDP is not limited to the portion of the surface covered with existing labeling; rather it includes the entire surface, excluding flanges, shoulders, handles, or necks.

(r) *Product* means an item or category of items manufactured from raw or recycled materials, or other products, which is used to perform a function or task.

(s) *Product containing* means a product including, but not limited to, containers, vessels, or pieces of equipment, that physically holds a controlled substance at the point of sale to the ultimate consumer which remains within the product.

(t) *Promotional printed material* means any informational or advertising material (including, but not limited to, written advertisements, brochures, circulars, desk references and fact sheets) that is prepared by the manufacturer for display or promotion concerning a product or container, and that does not accompany the product to the consumer.

(u) *Retailer* means a person to whom a product is delivered or sold, if such delivery or sale is for purposes of sale or distribution in commerce to consumers who buy such product for purposes other than resale.

(v) *Spare parts* means those parts that are supplied by a manufacturer to another manufacturer, distributor, or retailer, for purposes of replacing similar parts with such parts in the repair of a product.

(w) *Supplemental printed material* means any informational material (including, but not limited to, package inserts, fact sheets, invoices, material safety data sheets, procurement and specification sheets, or other material) which accompanies a product or container to the consumer at the time of purchase.

(x) *Transform* means to use and entirely consume a class I or class II substance, except for trace quantities, by changing it into one or more substances not subject to this subpart in the manufacturing process of a product or chemical.

(y) *Type size* means the actual height of the printed image of each capital letter as it appears on a label.

(z) *Ultimate consumer* means the first commercial or non-commercial purchaser of a container or product that is not intended for re-introduction into interstate commerce as a final product or as part of another product.

(aa) *Warning label* means the warning statement required by section 611 of the Act. The term warning statement shall be synonymous with warning label for purposes of this subpart.

(bb) *Waste* means, for purposes of this subpart, items or substances that are discarded with the intent that such items or substances will serve no further useful purpose.

(cc) *Wholesaler* means a person to whom a product is delivered or sold, if such delivery or sale is for purposes of sale or distribution to retailers who buy such product for purposes of resale.

[60 FR 4020, Jan. 19, 1995, as amended at 81 FR 6768, Feb. 9, 2016; 85 FR 15300, Mar. 17, 2020]

§ 82.106 Warning statement requirements.

(a) *Required warning statements.* (1) Unless otherwise exempted by this subpart, each container or product identified in § 82.102(a) or (b) shall bear the following warning statement, meeting the requirements of this subpart for placement and form:

WARNING: Contains [or Manufactured with, if applicable] [*insert name of substance*], a substance which harms public health and environment by destroying ozone in the upper atmosphere.

(2) Each container of fire suppression agent containing HCFC–123 produced or imported on or after January 1, 2020 shall bear the following warning statement, meeting the requirements of this subpart for placement and form:

WARNING: Contains [insert name of substance], a substance which harms public health and environment by destroying ozone in the upper atmosphere. Use Only for Recharge of Equipment Manufactured before January 1, 2020.

(3) Each container of fire suppression agent containing reclaimed HCFC–123 or HCFC–123 that was imported prior to January 1, 2020, shall bear the following warning statement, meeting the requirements of this subpart for placement and form:

WARNING: Contains [insert name of substance], a substance which harms public health and environment by destroying ozone in the upper atmosphere. For use in any equipment.

(b) *Exemptions from warning label requirement.* The following products need not bear a warning label:

(1) Products containing trace quantities of a controlled substance remaining as a residue or impurity due to a chemical reaction, and where the controlled substance serves no useful purpose in or for the product itself. However, if such product was manufactured using the controlled substance, the product is required to be labeled as a ''product manufactured with'' the controlled substance, unless otherwise exempted;

(2) Containers containing a controlled substance in which trace quantities of that controlled substance remain as a residue or impurity;

(3) Waste containing controlled substances or blends of controlled substances bound for discard;

(4) Products manufactured using methyl chloroform or CFC-113 by persons who can demonstrate and certify a 95% reduction in overall usage from their 1990 calendar year usage of methyl chloroform or CFC-113 as solvents during a twelve (12) month period ending within sixty (60) days of such certification or during the most recently completed calendar year. In calculating such reduction, persons may subtract from quantities used those quantities for which they possess accessible data that establishes the amount of methyl chloroform or CFC-113 transformed. Such subtraction must be performed for both the applicable twelve month period and the 1990 calendar year. If at any time future usage exceeds the 95% reduction, all products manufactured with methyl chloroform or CFC-113 as solvents by that person must be labeled immediately. No person may qualify for this exemption after May 15, 1994;

(5) Products intended only for export outside of the United States shall not be considered ''products introduced into interstate commerce'' provided such products are clearly designated as intended for export only;

(6) Products that are otherwise not subject to the requirements of this subpart that are being repaired, using a process that uses a controlled substance.

(7) Products, processes, or substitute chemicals undergoing research and development, by which a controlled substance is used. Such products must be labeled when they are introduced into interstate commerce.

(c) *Interference with other required labeling information.* The warning statement shall not interfere with, detract from, or mar any labeling information required on the labeling by federal or state law.

[60 FR 4020, Jan. 19, 1995, as amended at 85 FR 15300, Mar. 17, 2020]

§ 82.108 Placement of warning statement.

The warning statement shall be placed so as to satisfy the requirement of the Act that the warning statement be ''clearly legible and conspicuous.'' The warning statement is clearly legible and conspicuous if it appears with such prominence and conspicuousness as to render it likely to be read and understood by consumers under normal conditions of purchase. Such placement includes, but is not limited to, the following:

(a) *Display panel placement.* For any affected product or container that has a display panel that is normally viewed by the purchaser at the time of the purchase, the warning statement described in § 82.106 may appear on any such display panel of the affected product or container such that it is ''clearly legible and conspicuous'' at the time of the purchase. If the warning statement appears on the principal display panel or outer packaging of any such

affected product or container, the warning statement shall qualify as ''clearly legible and conspicuous,'' as long as the label also fulfills all other requirements of this subpart and is not obscured by any outer packaging, as required by paragraph (b) of this section. The warning statement need not appear on such display panel if either:

(1) The warning statement appears on the outer packaging of the product or container, consistent with paragraph (b) of this section, and is clearly legible and conspicuous; or

(2) The warning statement is placed in a manner consistent with paragraph (c) of this section.

(b) *Outer packaging*. If the product or container is normally packaged, wrapped, or otherwise covered when viewed by the purchaser at the time of the purchase the warning statement described in § 82.106 shall appear on any outer packaging, wrapping or other covering used in the retail display of the product or container, such that the warning statement is clearly legible and conspicuous at the time of the purchase. If the outer packaging has a display panel that is normally viewed by the purchaser at the time of the purchase, the warning statement shall appear on such display panel. If the warning statement so appears on such product's or container's outer packaging, it need not appear on the surface of the product or container, as long as the statement also fulfills all other requirements of this subpart. The warning statement need not appear on such outer packaging if either:

(1) The warning statement appears on the surface of the product or container, consistent with paragraph (a) of this section, and is clearly legible and conspicuous through any outer packaging, wrapping or other covering used in display; or

(2) The warning statement is placed in a manner consistent with paragraph (c) of this section.

(c) *Alternative placement*. The warning statement may be placed on a hang tag, tape, card, sticker, invoice, bill of lading, supplemental printed material, or similar overlabeling that is securely attached to the container, product, outer packaging or display case, or accompanies the product containing or manufactured with a controlled substance or a container containing class I or class II substances through its sale to the consumer or ultimate consumer. For prescription medical products that have been found to be essential for patient health by the Food and Drug Administration, the warning statement may be placed in supplemental printed material intended to be read by the prescribing physician, as long as the following statement is placed on the product, its packaging, or supplemental printed material intended to be read by the patient: ''This product contains [insert name of substance], a substance which harms the environment by depleting ozone in the upper atmosphere.'' In any case, the warning statement must be clearly legible and conspicuous at the time of the purchase.

(d) *Products not viewed by the purchaser at the time of purchase*. Where the purchaser of a product cannot view a product, its packaging or alternative labeling such that the warning statement is clearly legible and conspicuous at the time of purchase, as specified under paragraphs (a), (b), or (c) of this section, the warning statement may be placed in the following manner:

(1) Where promotional printed material is prepared for display or distribution, the warning statement may be placed on such promotional printed material such that it is clearly legible and conspicuous at the time of purchase; or

(2) The warning statement may be placed on the product, on its outer packaging, or on alternative labeling, consistent with paragraphs (a), (b), or (c) of this section, such that the warning statement is clearly legible and conspicuous at the time of product delivery, if the product may be returned by the purchaser at or after the time of delivery or if the purchase is not complete until the time of delivery (e.g., products delivered C.O.D.).

§ 82.110 Form of label bearing warning statement.

(a) *Conspicuousness and contrast*. The warning statement shall appear in conspicuous and legible type by typography, layout, and color with other printed matter on the label. The warning statement shall appear in sharp

contrast to any background upon which it appears. Examples of combinations of colors which may not satisfy the proposed requirement for sharp contrast are: black letters on a dark blue or dark green background, dark red letters on a light red background, light red letters on a reflective silver background, and white letters on a light gray or tan background.

(b) *Name of substance.* The name of the class I or class II substance to be inserted into the warning statement shall be the standard chemical name of the substance as listed in 40 CFR part 82, appendix A to subpart A, except that:

(1) The acronym ''CFC'' may be substituted for ''chlorofluorocarbon.''

(2) The acronym ''HCFC'' may be substituted for ''hydrochlorofluorocarbon.''

(3) The term ''1,1,1-trichloroethane'' may be substituted for ''methyl chloroform.''

(c) *Combined statement for multiple controlled substances.* If a container containing or a product contains or is manufactured with, more than one class I or class II substance, the warning statement may include the names of all of the substances in a single warning statement, provided that the combined statement clearly distinguishes which substances the container or product contains and which were used in the manufacturing process.

(d) *Format.* (1) The warning statement shall be blocked within a square or rectangular area, with or without a border. (2) The warning statement shall appear in lines that are parallel to the surrounding text on the product's PDP, display panel, supplemental printed material or promotional printed material.

(e) *Type style.* The ratio of the height of a capital letter to its width shall be such that the height of the letter is no more than 3 times its width; the signal word ''WARNING'' shall appear in all capital letters.

(f) *Type size.* The warning statement shall appear at least as large as the type sizes prescribed by this paragraph. The type size refers to the height of the capital letters. A larger type size materially enhances the legibility of the statement and is desirable.

(1) *Display panel or outer packaging.* Minimum type size requirements for the warning statement are given in Table 1 to this paragraph and are based upon the area of the display panel of the product or container. Where the statement is on outer packaging, as well as the display panel area, the statement shall appear in the same minimum type size as on the display panel.

TABLE 1 TO § 82.110(f)(1)

	Area of display panel (sq. in.)					
	0–2	>2–5	>5–10	>10–15	>15–30	>30
Type size (in.) [1]						
Signal word	3/64	1/16	3/32	7/64	1/8	5/32
Statement	3/64	3/64	1/16	3/32	3/32	7/64

>Means greater than.
[1] Minimum height of printed image of letters.

(2) *Alternative placement.* The minimum type size for the warning statement on any alternative placement which meets the requirements of § 82.108(c) is 3/32 inches for the signal word and 1/16 of an inch for the statement.

(3) *Promotional printed material.* The minimum type size for the warning statement on promotional printed material is 3/32 inches for the signal word and 1/16 of an inch for the statement, or the type size of any surrounding text, whichever is larger.

[60 FR 4020, Jan. 19, 1995, as amended at 79 FR 64289, Oct. 28, 2014]

§ 82.112 Removal of label bearing warning statement.

(a) *Prohibition on removal.* Except as described in paragraph (b) or (c) of this section, any warning statement that accompanies a product or container introduced into interstate commerce, as

required by this subpart, must remain with the product or container and any product incorporating such product or container, up to and including the point of sale to the ultimate consumer.

(b) *Incorporation of warning statement by subsequent manufacturers.* A manufacturer of a product that incorporates a product that is accompanied by a label bearing the warning statement may remove such label from the incorporated product if the information on such label is incorporated into a warning statement accompanying the manufacturer's product, or if, pursuant to paragraph (c) of this section, the manufacturer of the product is not required to pass through the information contained on or incorporated in the product's label.

(c) *Manufacturers that incorporate products manufactured with controlled substances.* A manufacturer that incorporates into its own product a component product that was purchased from another manufacturer, was manufactured with a process that uses a controlled substance(s), but does not contain such substance(s), may remove such label from the incorporated product and need not apply a warning statement to its own product, if the manufacturer does not use a controlled substance in its own manufacturing process. A manufacturer that uses controlled substances in its own manufacturing process, and is otherwise subject to the regulations of this subpart, must label pursuant to § 82.106, but need not include information regrading the incorporated product on the required label.

(d) *Manufacturers, distributors, wholesalers, retailers that sell spare parts manufactured with controlled substances solely for repair.* Manufacturers, distributors, wholesalers, and retailers that purchase spare parts manufactured with a class I or class II substance from another manufacturer or supplier, and sell such spare parts for the sole purpose of repair, are not required to pass through an applicable warning label if such products are removed from the original packaging provided by the manufacturer from whom the products are purchased. Manufacturers of the spare parts manufactured with controlled substances must still label their products; furthermore, manufacturers, importers, and distributors of such products must pass through the labeling information as long as products remain assembled and packaged in the manner assembled and packaged by the original manufacturer. This exemption shall not apply if a spare part is later used for manufacture and/or for purposes other than repair.

[60 FR 4020, Jan. 19, 1995, as amended at 79 FR 64289, Oct. 28, 2014]

§ 82.114 Compliance by manufacturers and importers with requirements for labeling of containers of controlled substances, or products containing controlled substances.

(a) *Compliance by manufacturers and importers with requirements for labeling of containers of controlled substances, or products containing controlled substances.* Each manufacturer of a product incorporating another product or container containing a controlled substance, to which § 82.102 (a)(1), or, (a)(2) or (b)(1) applies, that is purchased or obtained from another manufacturer or supplier, is required to pass through and incorporate the labeling information that accompanies such incorporated product in a warning statement accompanying the manufacturer's finished product. Each importer of a product, or container containing a controlled substance, to which § 82.102 (a)(1), (a)(2), or (b)(1) applies, including a component product or container incorporated into the product, that is purchased from a foreign manufacturer or supplier, is required to apply a label, or to ensure that a label has been properly applied, at the site of U.S. Customs clearance.

(b) *Reliance on reasonable belief.* The manufacturer or importer of a product that incorporates another product container from another manufacturer or supplier may rely on the labeling information (or lack thereof) that it receives with the product, and is not required to independently investigate whether the requirements of this subpart are applicable to such purchased product or container, as long as the manufacturer reasonably believes that the supplier or foreign manufacturer is reliably and accurately complying with the requirements of this subpart.

(c) *Contractual obligations.* A manufacturer's or importer's contractual relationship with its supplier under which the supplier is required to accurately label, consistent with the requirements of this subpart, any products containing a controlled substance or containers of a controlled substance that are supplied to the manufacturer or importer, is evidence of reasonable belief.

§ 82.116 Compliance by manufacturers or importers incorporating products manufactured with controlled substances.

(a) *Compliance by manufacturers or importers incorporating products manufactured with controlled substances, or importing products manufactured with controlled substances.* Each manufacturer or importer of a product incorporating another product to which § 82.102 (a)(3) or (b)(2) applies, that is purchased from another manufacturer or supplier, is not required to pass through and incorporate the labeling information that accompanies such incorporated product in a warning statement accompanying the manufacturer's or importer's finished product. Importers of products to which § 82.102 (a)(3) or (b)(2) applies are required to apply a label, or to ensure that a label has been properly applied at the site of U.S. Customs clearance.

(b) *Reliance on reasonable belief.* The importer of a product purchased or obtained from a foreign manufacturer or supplier, which product may have been manufactured with a controlled substance, may rely on the information that it receives with the purchased product, and is not required to independently investigate whether the requirements of this subpart are applicable to the purchased or obtained product, as long as the importer reasonably believes that there was no use of controlled substances by the final manufacturer of the product being imported.

(c) *Contractual obligations.* An importer's contractual relationship with its supplier under which the supplier is required to accurately label, consistent with the requirements of this subpart, any products manufactured with a controlled substance that are supplied to the importer, or to certify to the importer whether a product was or was not manufactured with a controlled substance is evidence of reasonable belief.

§ 82.118 Compliance by wholesalers, distributors and retailers.

(a) *Requirement of compliance by wholesalers, distributors and retailers.* All wholesalers, distributors and retailers of products or containers to which this subpart applies are required to pass through the labeling information that accompanies the product, except those purchasing from other manufacturers or suppliers spare parts manufactured with controlled substances and selling those parts for the demonstrable sole purpose of repair.

(b) *Reliance on reasonable belief.* The wholesaler, distributor or retailer of a product may rely on the labeling information that it receives with the product or container, and is not required to independently investigate whether the requirements of this subpart are applicable to the product or container, as long as the wholesaler, distributor or retailer reasonably believes that the supplier of the product or container is reliably and accurately complying with the requirements of this subpart.

(c) *Contractual obligations.* A wholesaler, distributor or retailer's contractual relationship with its supplier under which the supplier is required to accurately label, consistent with the requirements of this subpart, any products manufactured with a controlled substance that are supplied to the wholesaler, distributor or retailer is evidence of reasonable belief.

§ 82.120 Petitions.

(a) *Requirements for procedure and timing.* Persons seeking to apply the requirements of this regulation to a product containing a class II substance or a product manufactured with a class I or a class II substance which is not otherwise subject to the requirements, or to temporarily exempt a product manufactured with a class I substance, based on a showing of a lack of currently or potentially available alternatives, from the requirements of this regulation may submit petitions to: Labeling Program Manager, Stratospheric Protection Division, Office of

Atmospheric Programs, U.S. Environmental Protection Agency, 6202–J, 1200 Pennsylvania Ave., NW., Washington, DC 20460. Such persons must label their products while such petitions are under review by the Agency.

(b) *Requirement for adequate data.* Any petition submitted under paragraph (a) of this section shall be accompanied by adequate data, as defined in § 82.120(c). If adequate data are not included by the petitioner, the Agency may return the petition and request specific additional information.

(c) *Adequate data.* A petition shall be considered by the Agency to be supported by adequate data if it includes all of the following:

(1) A part clearly labeled ''Section I.A.'' which contains the petitioner's full name, company or organization name, address and telephone number, the product that is the subject of the petition, and, in the case of a petition to temporarily exempt a product manufactured with a class I substance from the labeling requirement, the manufacturer or manufacturers of that product.

(2) For petitions to temporarily exempt a product manufactured with a class I substance only, a part clearly labeled ''Section I.A.T.'' which states the length of time for which an exemption is requested.

(3) A part clearly labeled ''Section I.B.'' which includes the following statement, signed by the petitioner or an authorized representative:

''I certify under penalty of law that I have personally examined and am familiar with the information submitted in this petition and all attached documents, and that, based on my inquiry of those individuals immediately responsible for obtaining the information, I believe that the submitted information is true, accurate, and complete. I am aware that there are significant penalties for submitting false information.''

(4) A part clearly labeled ''Section I.C.'' which fully explains the basis for the petitioner's request that EPA add the labeling requirements to or remove them from the product which is the subject of the petition, based specifically upon the technical facility or laboratory tests, literature, or economic analysis described in paragraphs (c) (5), (6) and (7) of this section.

(5) A part clearly labeled ''Section II.A.'' which fully describes any technical facility or laboratory tests used to support the petitioner's claim.

(6) A part clearly labeled ''Section II.B.'' which fully explains any values taken from literature or estimated on the basis of known information that are used to support the petitioner's claim.

(7) A part clearly labeled ''Section II.C.'' which fully explains any economic analysis used to support the petitioner's claim.

(d) *Criteria for evaluating petitions.* Adequate data in support of any petition to the Agency to add a product to the labeling requirement or temporarily remove a product from the labeling requirement will be evaluated based upon a showing of sufficient quality and scope by the petitioner of whether there are or are not substitute products or manufacturing processes for such product:

(1) That do not rely on the use of such class I or class II substance;

(2) That reduce the overall risk to human health and the environment; and

(3) That are currently or potentially available.

(e) *Procedure for acceptance or denial of petition.* (1) If a petition submitted under this section contains adequate data, as defined under paragraph (c) of this section, the Agency shall within 180 days after receiving the complete petition either accept the petition or deny the petition.

(2) If the Agency makes a decision to accept a petition to apply the requirements of this regulation to a product containing or manufactured with a class II substance, the Agency will notify the petitioner and publish a proposed rule in the FEDERAL REGISTER to apply the labeling requirements to the product.

(3) If the Agency makes a decision to deny a petition to apply the requirements of this regulation to a product containing or manufactured with a class II substance, the Agency will notify the petitioner and publish an explanation of the petition denial in the FEDERAL REGISTER.

(4) If the Agency makes a decision to accept a petition to temporarily exempt a product manufactured with a class I substance from the requirements of this regulation, the Agency will notify the petitioner and publish a proposed rule in the FEDERAL REGISTER to temporarily exempt the product from the labeling requirements. Upon notification by the Agency, such manufacturer may immediately cease its labeling process for such exempted products.

(5) If the Agency makes a decision to deny a petition to temporarily exempt a product manufactured with a class I substance from the requirements of this regulation, the Agency will notify the petitioner and may, in appropriate circumstances, publish an explanation of the petition denial in the FEDERAL REGISTER.

§ 82.122 Certification, recordkeeping, and notice requirements.

(a) *Certification*. (1) Persons claiming the exemption provided in § 82.106(b)(4) must submit a written certification to the following address: Labeling Program Manager, Stratospheric Protection Division, Office of Atmospheric Programs, 6205–T, 1200 Pennsylvania Ave. NW., Washington DC 20460.

(2) The certification must contain the following information:

(i) The exact location of documents verifying calendar year 1990 usage and the 95% reduced usage during a twelve month period;

(ii) A description of the records maintained at that location;

(iii) A description of the type of system used to track usage;

(iv) An indication of which 12 month period reflects the 95% reduced usage, and;

(v) Name, address, and telephone number of a contact person.

(3) Persons who submit certifications postmarked on or before May 15, 1993, need not place warning labels on their products manufactured using CFC-113 or methyl chloroform as a solvent. Persons who submit certifications postmarked after May 15, 1993, must label their products manufactured using CFC-113 or methyl chloroform as a solvent for 14 days following such submittal of the certification.

(4) Persons certifying must also include a statement that indicates their future annual use will at no time exceed 5% of their 1990 usage.

(5) Certifications must be signed by the owner or a responsible corporate officer.

(6) If the Administrator determines that a person's certification is incomplete or that information supporting the exemption is inadequate, then products manufactured using CFC-113 or methyl chloroform as a solvent by such person must be labeled pursuant to § 82.106(a).

(b) *Recordkeeping*. Persons claiming the exemption under section 82.106(b)(2) must retain supporting documentation at one of their facilities.

(c) *Notice Requirements*. Persons who claim an exemption under § 82.106(b)(2) must submit a notice to the address in paragraph (a)(1) of this section within 30 days of the end of any 12 month period in which their usage of CFC-113 or methyl chloroform used as a solvent exceeds the 95% reduction from calendar year 1990.

[60 FR 4020, Jan. 19, 1995, as amended at 79 FR 64289, Oct. 28, 2014]

§ 82.124 Prohibitions.

(a) *Warning statement*—(1) *Absence or presence of warning statement*. (i) Applicable May 15, 1993, except as indicated in paragraph (a)(5) of this section, no container or product identified in § 82.102(a) may be introduced into interstate commerce unless it bears a warning statement that complies with the requirements of § 82.106(a) of this subpart, unless such labeling is not required under § 82.102(c), § 82.106(b), § 82.112 (c) or (d), § 82.116(a), § 82.118(a), or temporarily exempted pursuant to § 82.120.

(ii) On January 1, 2015, or any time between May 15, 1993 and January 1, 2015 that the Administrator determines for a particular product manufactured with or containing a class II substance that there are substitute products or manufacturing processes for such product that do not rely on the use of a class I or class II substance, that reduce the overall risk to human health and the environment, and that are currently or potentially available, no product identified in § 82.102(b) may be

introduced into interstate commerce unless it bears a warning statement that complies with the requirements of § 82.106, unless such labeling is not required under § 82.106(b), § 82.112 (c) or (d), § 82.116(a) or § 82.118(a).

(2) *Placement of warning statement.* (i) On May 15, 1993, except as indicated in paragraph (a)(5) of this section, no container or product identified in § 82.102(a) may be introduced into interstate commerce unless it bears a warning statement that complies with the requirements of § 82.108 of this subpart, unless such labeling is not required under § 82.102(c), § 82.106(b), § 82.112 (c) or (d), § 82.116(a), § 82.118(a), or temporarily exempted pursuant to § 82.120.

(ii) On January 1, 2015, or any time between May 15, 1993 and January 1, 2015 that the Administrator determines for a particular product manufactured with or containing a class II substance that there are substitute products or manufacturing processes for such product that do not rely on the use of a class I or class II substance, that reduce the overall risk to human health and the environment, and that are currently or potentially available, no product identified in § 82.102(b) may be introduced into interstate commerce unless it bears a warning statement that complies with the requirements of § 82.108 of this subpart, unless such labeling is not required under § 82.106(b), § 82.112 (c) or (d), § 82.116(a) or § 82.118(a).

(3) *Form of label bearing warning statement.* (i) Applicable May 15, 1993, except as indicated in paragraph (a)(5) of this section, no container or product identified in § 82.102(a) may be introduced into interstate commerce unless it bears a warning statement that complies with the requirements of § 82.110, unless such labeling is not required pursuant to § 82.102(c), § 82.106(b), § 82.112 (c) or (d), § 82.116(a), § 82.118(a), or temporarily exempted pursuant to § 82.120.

(ii) On January 1, 2015, or any time between May 15, 1993 and January 1, 2015 that the Agency determines for a particular product manufactured with or containing a class II substance, that there are substitute products or manufacturing processes that do not rely on the use of a class I or class II substance, that reduce the overall risk to human health and the environment, and that are currently or potentially available, no product identified in § 82.102(b) may be introduced into interstate commerce unless it bears a warning statement that complies with the requirements of § 82.110, unless such labeling is not required pursuant to § 82.106(b), § 82.112 (c) or (d), § 82.116(a), or § 82.118(a).

(4) On or after May 15, 1993, no person may modify, remove or interfere with any warning statement required by this subpart, except as described in § 82.112.

(5) In the case of any substance designated as a class I or class II substance after February 11, 1993, the prohibitions in paragraphs (a)(1)(i), (a)(2)(i), and (a)(3)(i) of this section shall be applicable one year after the designation of such substance as a class I or class II substance unless otherwise specified in the designation.

Subpart F—Recycling and Emissions Reduction

SOURCE: 58 FR 28712, May 14, 1993, unless otherwise noted.

§ 82.150 Purpose and scope.

(a) The purpose of this subpart is to reduce emissions of class I and class II refrigerants and their non-exempt substitutes to the lowest achievable level by maximizing the recapture and recycling of such refrigerants during the maintenance, service, repair, and disposal of appliances and restricting the sale of refrigerants consisting in whole or in part of a class I or class II ozone-depleting substance or their non-exempt substitutes in accordance with Title VI of the Clean Air Act.

(b) This subpart applies to any person maintaining, servicing, or repairing appliances containing class I, class II or non-exempt substitute refrigerants. This subpart also applies to persons disposing of such appliances (including small appliances and motor vehicle air conditioners), refrigerant reclaimers, technician certifying programs, appliance owners and operators, manufacturers of appliances, manufacturers of recovery and/or recycling equipment, approved recovery and/or recycling equipment testing organizations, and persons buying, selling, or offering to

sell class I, class II, or non-exempt substitute refrigerants.

[81 FR 82349, Nov. 11, 2016]

§ 82.152 Definitions.

Appliance means any device which contains and uses a class I or class II substance or substitute as a refrigerant and which is used for household or commercial purposes, including any air conditioner, motor vehicle air conditioner, refrigerator, chiller, or freezer. For a system with multiple circuits, each independent circuit is considered a separate appliance.

Apprentice means any person who is currently registered as an apprentice in maintenance, service, repair, or disposal of appliances with the U.S. Department of Labor's Office of Apprenticeship (or a State Apprenticeship Council recognized by the Office of Apprenticeship). A person may only be an apprentice for two years from the date of first registering with that office.

Approved equipment testing organization means any organization which has applied for and received approval from the Administrator pursuant to § 82.160.

Batch means a single bulk cylinder of refrigerant after all reclamation has been completed prior to packaging or shipping to the market.

Class I refers to an ozone-depleting substance that is listed in 40 CFR part 82 subpart A, appendix A.

Class II refers to an ozone-depleting substance that is listed in 40 CFR part 82 subpart A, appendix B.

Certified refrigerant recovery or recycling equipment means equipment manufactured before November 15, 1993, that meets the standards in § 82.158(c), (e), or (g); equipment certified by an approved equipment testing organization to meet the standards in § 82.158(b), (d), or (f); or equipment certified pursuant to § 82.36(a).

Comfort cooling means the air-conditioning appliances used to provide cooling in order to control heat and/or humidity in occupied facilities including but not limited to residential, office, and commercial buildings. Comfort cooling appliances include but are not limited to chillers, commercial split systems, and packaged roof-top units.

Commercial refrigeration means the refrigeration appliances used in the retail food and cold storage warehouse sectors. Retail food appliances include the refrigeration equipment found in supermarkets, convenience stores, restaurants and other food service establishments. Cold storage includes the refrigeration equipment used to store meat, produce, dairy products, and other perishable goods.

Component means a part of the refrigerant circuit within an appliance including, but not limited to, compressors, condensers, evaporators, receivers, and all of its connections and subassemblies.

Custom-built means that the industrial process equipment or any of its components cannot be purchased and/or installed without being uniquely designed, fabricated and/or assembled to satisfy a specific set of industrial process conditions.

Disposal means the process leading to and including:

(1) The discharge, deposit, dumping or placing of any discarded appliance into or on any land or water;

(2) The disassembly of any appliance for discharge, deposit, dumping or placing of its discarded component parts into or on any land or water;

(3) The vandalism of any appliance such that the refrigerant is released into the environment or would be released into the environment if it had not been recovered prior to the destructive activity;

(4) The disassembly of any appliance for reuse of its component parts; or

(5) The recycling of any appliance for scrap.

Follow-up verification test means those tests that involve checking the repairs to an appliance after a successful initial verification test and after the appliance has returned to normal operating characteristics and conditions to verify that the repairs were successful. Potential methods for follow-up verification tests include, but are not limited to, the use of soap bubbles as appropriate, electronic or ultrasonic leak detectors, pressure or vacuum tests, fluorescent dye and black light, infrared or near infrared tests, and handheld gas detection devices.

Full charge means the amount of refrigerant required for normal operating characteristics and conditions of the appliance as determined by using one or a combination of the following four methods:

(1) Use of the equipment manufacturer's determination of the full charge;

(2) Use of appropriate calculations based on component sizes, density of refrigerant, volume of piping, and other relevant considerations;

(3) Use of actual measurements of the amount of refrigerant added to or evacuated from the appliance, including for seasonal variances; and/or

(4) Use of an established range based on the best available data regarding the normal operating characteristics and conditions for the appliance, where the midpoint of the range will serve as the full charge.

High-pressure appliance means an appliance that uses a refrigerant with a liquid phase saturation pressure between 170 psia and 355 psia at 104 °F. Examples include but are not limited to appliances using R–22, R–407A, R–407C, R–410A, and R–502.

Industrial process refrigeration means complex customized appliances that are directly linked to the processes used in, for example, the chemical, pharmaceutical, petrochemical, and manufacturing industries. This sector also includes industrial ice machines, appliances used directly in the generation of electricity, and ice rinks. Where one appliance is used for both industrial process refrigeration and other applications, it will be considered industrial process refrigeration equipment if 50 percent or more of its operating capacity is used for industrial process refrigeration.

Industrial process shutdown means when an industrial process or facility temporarily ceases to operate or manufacture whatever is being produced at that facility.

Initial verification test means those leak tests that are conducted after the repair is finished to verify that a leak or leaks have been repaired before refrigerant is added back to the appliance.

Leak inspection means the examination of an appliance to determine the location of refrigerant leaks. Potential methods include, but are not limited to, ultrasonic tests, gas-imaging cameras, bubble tests as appropriate, or the use of a leak detection device operated and maintained according to manufacturer guidelines. Methods that determine whether the appliance is leaking refrigerant but not the location of a leak, such as standing pressure/vacuum decay tests, sight glass checks, viewing receiver levels, pressure checks, and charging charts, must be used in conjunction with methods that can determine the location of a leak.

Leak rate means the rate at which an appliance is losing refrigerant, measured between refrigerant charges. The leak rate is expressed in terms of the percentage of the appliance's full charge that would be lost over a 12-month period if the current rate of loss were to continue over that period. The rate must be calculated using one of the following methods. The same method must be used for all appliances subject to the leak repair requirements located at an operating facility.

(1) Annualizing Method. (i) Step 1. Take the number of pounds of refrigerant added to the appliance to return it to a full charge, whether in one addition or if multiple additions related to same leak, and divide it by the number of pounds of refrigerant the appliance normally contains at full charge;

(ii) Step 2. Take the shorter of the number of days that have passed since the last day refrigerant was added or 365 days and divide that number by 365 days;

(iii) Step 3. Take the number calculated in Step 1 and divide it by the number calculated in Step 2; and

(iv) Step 4. Multiply the number calculated in Step 3 by 100 to calculate a percentage. This method is summarized in the following formula:

$$\text{Leak rate (\% per year)} = \frac{\text{pounds of refrigerant added}}{\text{pounds of refrigerant in full charge}} \times \frac{365\ \textit{days/year}}{\textit{shorter of: \# days since refrigerant last added or 365 days}} \times 100\%$$

(2) Rolling Average Method. (i) Step 1. Take the sum of the pounds of refrigerant added to the appliance over the previous 365-day period (or over the period that has passed since the last successful follow-up verification test showing all identified leaks in the appliance were repaired, if that period is less than one year);

(ii) Step 2. Divide the result of Step 1 by the pounds of refrigerant the appliance normally contains at full charge; and

(iii) Step 3. Multiply the result of Step 2 by 100 to obtain a percentage. This method is summarized in the following formula:

$$\text{Leak rate (\% per year)} = \frac{\text{pounds of refrigerant added over past 365 days (or since the last successful follow-up verification test showing all identified leaks in the appliance were repaired, if that period is less than one year)}}{\text{pounds of refrigerant in full charge}} \times 100\%$$

Low-loss fitting means any device that is intended to establish a connection between hoses, appliances, or recovery and/or recycling machines and that is designed to close automatically or to be closed manually when disconnected, minimizing the release of refrigerant from hoses, appliances, and recovery and/or recycling machines.

Low-pressure appliance means an appliance that uses a refrigerant with a liquid phase saturation pressure below 45 psia at 104 °F. Examples include but are not limited to appliances using R–11, R–123, R–113, and R–245fa.

Major maintenance, service, or repair means any maintenance, service, or repair that involves the removal of any or all of the following appliance components: compressor, condenser, evaporator, or auxiliary heat exchange coil; or any maintenance, service, or repair that involves uncovering an opening of more than four (4) square inches of ''flow area'' for more than 15 minutes.

Medium-pressure appliance means an appliance that uses a refrigerant with a liquid phase saturation pressure between 45 psia and 170 psia at 104 °F. Examples include but are not limited to appliances using R–114, R–124, R–12, R–134a, and R–500.

Mothball means to evacuate refrigerant from an appliance, or the affected isolated section or component of an appliance, to at least atmospheric pressure, and to temporarily shut down that appliance.

Motor vehicle air conditioner (MVAC) means any appliance that is a motor vehicle air conditioner as defined in 40 CFR part 82, subpart B.

MVAC-like appliance means a mechanical vapor compression, open-drive compressor appliance with a full charge of 20 pounds or less of refrigerant used to cool the driver's or passenger's compartment of off-road vehicles or equipment. This includes, but is not limited to, the air-conditioning equipment found on agricultural or construction vehicles. This definition is not intended to cover appliances using R–22 refrigerant.

Normal operating characteristics and conditions means appliance operating temperatures, pressures, fluid flows, speeds, and other characteristics, including full charge of the appliance, that would be expected for a given process load and ambient condition during normal operation. Normal operating characteristics and conditions are marked by the absence of atypical

conditions affecting the operation of the appliance.

One-time expansion device means an appliance that relies on the release of its refrigerant charge to the environment in order to provide a cooling effect. These are typically single releases but could also include products that are designed to release refrigerant to the environment through multiple individual charges.

Opening an appliance means any maintenance, service, repair, or disposal of an appliance that would release any refrigerant in the appliance to the atmosphere. Connecting and disconnecting hoses and gauges to measure pressures, add refrigerant, or recover refrigerant from the appliance are not considered ''opening an appliance.''

Parent company means an individual, corporation, partnership, association, joint-stock company, or an unincorporated organization that can direct or cause the direction of management and policies of another entity, through the ownership of shares or otherwise.

Person means any individual or legal entity, including an individual, corporation, partnership, association, state, municipality, political subdivision of a state, Indian tribe, and any agency, department, or instrumentality of the United States, and any officer, agent, or employee thereof.

Process stub means a length of tubing that provides access to the refrigerant inside a small appliance or room air conditioner and that can be resealed at the conclusion of repair or service.

Reclaim means to reprocess recovered refrigerant to all of the specifications in appendix A of this subpart (based on AHRI Standard 700–2016, *Specifications for Refrigerants*) that are applicable to that refrigerant and to verify that the refrigerant meets these specifications using the analytical methodology prescribed in section 5 of appendix A of this subpart.

Recover means to remove refrigerant in any condition from an appliance and to store it in an external container without necessarily testing or processing it in any way.

Recovery efficiency means the percentage of refrigerant in an appliance that is recovered by a piece of recovery and/or recycling equipment.

Recycle, when referring to refrigerant, means to extract refrigerant from an appliance (except MVACs) and clean it for reuse in equipment of the same owner without meeting all of the requirements for reclamation. In general, recycled refrigerant is cleaned using oil separation and single or multiple passes through devices, such as replaceable core filter-driers, which reduce moisture, acidity, and particulate matter.

Refrigerant means, for purposes of this subpart, any substance, including blends and mixtures, consisting in part or whole of a class I or class II ozone-depleting substance or substitute that is used for heat transfer purposes and provides a cooling effect.

Refrigerant circuit means the parts of an appliance that are normally connected to each other (or are separated only by internal valves) and are designed to contain refrigerant.

Retire, when referring to an appliance, means the removal of the refrigerant and the disassembly or impairment of the refrigerant circuit such that the appliance as a whole is rendered unusable by any person in the future.

Retrofit means to convert an appliance from one refrigerant to another refrigerant. Retrofitting includes the conversion of the appliance to achieve system compatibility with the new refrigerant and may include, but is not limited to, changes in lubricants, gaskets, filters, driers, valves, o-rings or appliance components.

Seasonal variance means the removal of refrigerant from an appliance due to a change in ambient conditions caused by a change in season, followed by the subsequent addition of an amount that is less than or equal to the amount of refrigerant removed in the prior change in season, where both the removal and addition of refrigerant occurs within one consecutive 12-month period.

Self-contained recovery equipment means refrigerant recovery and/or recycling equipment that is capable of removing the refrigerant from an appliance without the assistance of components contained in the appliance.

Self-sealing valve means a valve affixed to a container of refrigerant that automatically seals when not dispensing refrigerant and meets or exceeds established performance criteria as identified in § 82.154(c)(2).

Small appliance means any appliance that is fully manufactured, charged, and hermetically sealed in a factory with five (5) pounds or less of refrigerant, including, but not limited to, refrigerators and freezers (designed for home, commercial, or consumer use), medical or industrial research refrigeration equipment, room air conditioners (including window air conditioners, portable air conditioners, and packaged terminal air heat pumps), dehumidifiers, under-the-counter ice makers, vending machines, and drinking water coolers.

Substitute means any chemical or product, whether existing or new, that is used as a refrigerant to replace a class I or II ozone-depleting substance. Examples include, but are not limited to hydrofluorocarbons, perfluorocarbons, hydrofluoroolefins, hydrofluoroethers, hydrocarbons, ammonia, carbon dioxide, and blends thereof. As used in this subpart, the term ''exempt substitutes'' refers to certain substitutes when used in certain end-uses that are specified in § 82.154(a)(1) as exempt from the venting prohibition and the requirements of this subpart, and the term ''non-exempt substitutes'' refers to all other substitutes and end-uses not so specified in § 82.154(a)(1).

System-dependent recovery equipment means refrigerant recovery equipment that requires the assistance of components contained in an appliance to remove the refrigerant from the appliance.

System receiver means the isolated portion of the appliance, or a specific vessel within the appliance, that is used to hold the refrigerant charge during the servicing or repair of that appliance.

Technician means any person who in the course of maintenance, service, or repair of an appliance (except MVACs) could be reasonably expected to violate the integrity of the refrigerant circuit and therefore release refrigerants into the environment. Technician also means any person who in the course of disposal of an appliance (except small appliances, MVACs, and MVAC-like appliances) could be reasonably expected to violate the integrity of the refrigerant circuit and therefore release refrigerants from the appliances into the environment. Activities reasonably expected to violate the integrity of the refrigerant circuit include but are not limited to: Attaching or detaching hoses and gauges to and from the appliance; adding or removing refrigerant; adding or removing components; and cutting the refrigerant line. Activities such as painting the appliance, rewiring an external electrical circuit, replacing insulation on a length of pipe, or tightening nuts and bolts are not reasonably expected to violate the integrity of the refrigerant circuit. Activities conducted on appliances that have been properly evacuated pursuant to § 82.156 are not reasonably expected to release refrigerants unless the activity includes adding refrigerant to the appliance. Technicians could include but are not limited to installers, contractor employees, in-house service personnel, and owners and/or operators of appliances.

Very high-pressure appliance means an appliance that uses a refrigerant with a critical temperature below 104 °F or with a liquid phase saturation pressure above 355 psia at 104 °F. Examples include but are not limited to appliances using R–13, R–23, R–503, R–508A, and R–508B.

[58 FR 28712, May 14, 1993, as amended at 59 FR 42956, Aug. 19, 1994; 59 FR 55925, Nov. 9, 1994; 60 FR 40439, Aug. 8, 1995; 68 FR 43806, July 24, 2003; 69 FR 11978, Mar. 12, 2004; 70 FR 1991, Jan. 11, 2005; 70 FR 19278, Apr. 13, 2005; 81 FR 82349, Nov. 18, 2016]

§ 82.154 Prohibitions.

(a) *Venting prohibition*. (1) No person maintaining, servicing, repairing, or disposing of an appliance or industrial process refrigeration may knowingly vent or otherwise release into the environment any refrigerant from such appliances. Notwithstanding any other provision of this subpart, the following substitutes in the following end-uses are exempt from this prohibition and from the requirements of this subpart:

(i) Carbon dioxide in any application;

(ii) Nitrogen in any application;

(iii) Water in any application;

(iv) Ammonia in commercial or industrial process refrigeration or in absorption units;

(v) Chlorine in industrial process refrigeration (processing of chlorine and chlorine compounds);

(vi) Hydrocarbons in industrial process refrigeration (processing of hydrocarbons);

(vii) Ethane (R–170) in very low temperature refrigeration equipment and equipment for non-mechanical heat transfer;

(viii) Propane (R-290) in retail food refrigerators and freezers (stand-alone units only); household refrigerators, freezers, and combination refrigerators and freezers; self-contained room air conditioners for residential and light commercial air-conditioning and heat pumps; vending machines; and effective January 3, 2017, self-contained commercial ice machines, very low temperature refrigeration equipment, and water coolers;

(ix) Isobutane (R–600a) in retail food refrigerators and freezers (stand-alone units only); household refrigerators, freezers, and combination refrigerators and freezers; and vending machines;

(x) R–441A in retail food refrigerators and freezers (stand-alone units only); household refrigerators, freezers, and combination refrigerators and freezers; self-contained room air conditioners for residential and light commercial air-conditioning; heat pumps; and vending machines.

(2) *De minimis* releases associated with good faith attempts to recycle or recover refrigerants are not subject to this prohibition. Except for exempt substitutes, refrigerant releases are *de minimis* only if they occur when:

(i) The applicable practices in §§ 82.155 and 82.156 are observed, the applicable practices in § 82.157 are observed for appliances that contain any class I or class II refrigerant or blend containing a class I or class II refrigerant, recovery and/or recycling machines that meet the requirements in § 82.158 are used whenever refrigerant is removed from an appliance, the technician certification provisions in § 82.161 are observed, and the reclamation requirements in § 82.164 are observed; or

(ii) The requirements in subpart B of this part are observed.

(3) The knowing release of a class I or class II refrigerant or a non-exempt substitute refrigerant after its recovery from an appliance is a violation of the venting prohibition.

(b) No person may maintain, service, repair, or dispose of an appliance containing a class I or class II refrigerant or a non-exempt substitute refrigerant without:

(1) Observing the applicable practices in § 82.155, § 82.156, and § 82.157; and

(2) Using recovery and/or recycling equipment that is certified for that type of refrigerant and appliance under § 82.158.

(c) *Sales Restriction*. (1) No person may sell or distribute, or offer for sale or distribution, any substance that consists in whole or in part of a class I or class II substance or, starting on January 1, 2018, any non-exempt substitute for use as a refrigerant unless:

(i) The buyer has been certified as a Type I, Type II, Type III, or Universal technician under § 82.161;

(ii) The buyer employs at least one technician who is certified as a Type I, Type II, Type III, or Universal technician under § 82.161 and provides proof of such to the seller;

(iii) The buyer has been certified in accordance with 40 CFR part 82, subpart B and the refrigerant is acceptable for use in MVACs under 40 CFR part 82, subpart G;

(iv) The buyer employs at least one person who is certified under 40 CFR part 82, subpart B, and provides proof of such to the seller and the refrigerant is acceptable for use in MVACs under 40 CFR part 82, subpart G. Nothing in this provision relieves persons of the requirements of § 82.34(b) or § 82.42(b);

(v) The refrigerant is sold only for eventual resale to persons certified under § 82.161 or 40 CFR part 82, subpart B or to appliance manufacturers (*e.g.*, sold by a manufacturer to a wholesaler, sold by a technician to a reclaimer);

(vi) The refrigerant is sold to an appliance manufacturer;

(vii) The refrigerant is contained in an appliance with a fully assembled refrigerant circuit or an appliance component;

(viii) The refrigerant is charged into an appliance by a certified technician or an apprentice during maintenance, service, or repair of the appliance; or

(ix) The non-exempt substitute refrigerant is intended for use in an MVAC and is sold in a container designed to hold two pounds or less of refrigerant, has a unique fitting, and, if manufactured or imported on or after January 1, 2018, has a self-sealing valve that complies with the requirements of paragraph (c)(2) of this section.

(2) *Self-sealing valve specifications.* This provision applies starting January 1, 2018, for all containers holding two pounds or less of non-exempt substitute refrigerant for use in an MVAC that are manufactured or imported on or after that date.

(i) Each container holding two pounds or less of non-exempt substitute refrigerant for use in an MVAC must be equipped with a single self-sealing valve that automatically closes and seals when not dispensing refrigerant.

(ii) The leakage rate from each container must not exceed 3.00 grams per year when the self-sealing valve is closed. This leakage rate applies to new, full containers as well as containers that may be partially full.

(iii) The leakage rate must be determined using the standards described in appendix E (incorporated by reference, see § 82.168).

(iv) All testing to demonstrate compliance with this paragraph must be conducted by an independent test laboratory in the United States. For purposes of this requirement, an independent test laboratory is one that is not owned, operated, or affiliated with the applicant certifying equipment and/or products.

(3) *Recordkeeping.* (i) Persons who sell or distribute, or offer to sell or distribute, any class I or class II refrigerant, or, starting on January 1, 2018, any non-exempt substitute refrigerant must keep invoices that indicate the name of the purchaser, the date of sale, and the quantity of refrigerant purchased unless they are selling exempt substitutes (those substitutes used in the end-uses specified as exempt in paragraph (a)(1) of this section) or small cans of MVAC refrigerant in accordance with paragraph (c)(1)(ix) of this section. In instances where the buyer employs a person certified under § 82.161 or 40 CFR part 82, subpart B, the seller must keep the documentation provided by the buyer to demonstrate such employment. All records must be kept for three years.

(ii) Electronic or paper copies of all records described in appendix E must be maintained by manufacturers of containers holding two pounds or less of non-exempt substitute refrigerant for use in an MVAC to verify self-sealing valves meet the requirements specified in paragraph (c)(2) of this section. All records must be kept for three years after each purchase.

(d) *Sale of Used Refrigerant.* No person may sell or distribute, or offer for sale or distribution, for use as a refrigerant any class I or class II substance or non-exempt substitute consisting wholly or in part of used refrigerant unless the refrigerant:

(1) Has been reclaimed by a person who has been certified as a reclaimer under § 82.164;

(2) was used only in an MVAC or MVAC-like appliance and is to be used only in an MVAC or MVAC-like appliance and recycled in accordance with 40 CFR part 82, subpart B;

(3) is contained in an appliance that is sold or offered for sale together with a fully assembled refrigerant circuit;

(4) is being transferred between or among a parent company and one or more of its subsidiaries, or between or among subsidiaries having the same parent company; or

(5) is being transferred between or among a Federal agency or department and a facility or facilities owned by the same Federal agency or department.

(e) *Manufacture and Sale of Appliances.* (1) No person may sell or distribute, or offer for sale or distribution, any appliance (except small appliances and appliances containing only refrigerants that have been exempted under paragraph (a)(1) of this section) unless it is equipped with a servicing aperture to facilitate the removal of refrigerant at servicing and disposal.

(2) No person may sell or distribute, or offer for sale or distribution, any small appliance (except appliances containing only refrigerants that have

been exempted under paragraph (a)(1) of this section) unless it is equipped with a process stub to facilitate the removal of refrigerant at servicing and disposal.

(f) *One-time expansion devices*. No person may manufacture or import a one-time expansion device unless the only refrigerants it contains have been exempted under paragraph (a)(1) of this section.

(g) Rules stayed for consideration. Notwithstanding any other provisions of this subpart, the effectiveness of 40 CFR 82.154(c), only as it applies to refrigerant contained in appliances without fully assembled refrigerant circuits, is stayed from April 27, 1995, until EPA takes final action on its reconsideration of these provisions. EPA will publish any such final action in the FEDERAL REGISTER.

[81 FR 82352, Nov. 18, 2016, as amended at 81 FR 86881, Dec. 1, 2016; 82 FR 61184, Dec. 27, 2017; 85 FR 14171, Apr. 10, 2020]

§ 82.155 Safe disposal of appliances.

Until January 1, 2018, this section applies only to disposal of appliances containing class I and class II refrigerants. Starting on January 1, 2018, this section applies to disposal of appliances containing any class I or class II refrigerant or any non-exempt substitute refrigerant.

(a) Persons recovering refrigerant from a small appliance, MVAC, or MVAC-like appliance for purposes of disposal of these appliances must evacuate refrigerant to the levels in § 82.156(b) through (d) using recovery equipment that meets the standards in § 82.158(e) through (g), or 40 CFR part 82 subpart B, as applicable.

(b) The final processor—*i.e.,* persons who take the final step in the disposal process (including but not limited to scrap recyclers and landfill operators) of a small appliance, MVAC, or MVAC-like appliance—must either:

(1) Recover any remaining refrigerant from the appliance in accordance with paragraph (a) of this section; or

(2) Verify using a signed statement or a contract that all refrigerant that had not leaked previously has been recovered from the appliance or shipment of appliances in accordance with paragraph (a) of this section. If using a signed statement, it must include the name and address of the person who recovered the refrigerant and the date the refrigerant was recovered. If using a signed contract between the supplier and the final processor, it must either state that the supplier will recover any remaining refrigerant from the appliance or shipment of appliances in accordance with paragraph (a) of this section prior to delivery or verify that the refrigerant had been properly recovered prior to receipt by the supplier.

(i) It is a violation of this subpart to accept a signed statement or contract if the person receiving the statement or contract knew or had reason to know that the signed statement or contract is false.

(ii) The final processor must notify suppliers of appliances that refrigerant must be properly recovered in accordance with paragraph (a) of this section before delivery of the items to the facility. The form of this notification may be signs, letters to suppliers, or other equivalent means.

(iii) If all the refrigerant has leaked out of the appliance, the final processor must obtain a signed statement that all the refrigerant in the appliance had leaked out prior to delivery to the final processor and recovery is not possible. ''Leaked out'' in this context means those situations in which the refrigerant has escaped because of system failures, accidents, or other unavoidable occurrences not caused by a person's negligence or deliberate acts such as cutting refrigerant lines.

(c) *Recordkeeping*. The final processor of a small appliance, MVAC, or MVAC-like appliance must keep a copy of all the signed statements or contracts obtained under paragraph (b)(2) of this section on site, in hard copy or in electronic format, for three years.

[81 FR 82353, Nov. 18, 2016]

§ 82.156 Proper evacuation of refrigerant from appliances.

Until January 1, 2018, this section applies only to evacuation of refrigerant from appliances containing class I or class II refrigerants. Starting on January 1, 2018, this section applies to evacuation of refrigerant from appliances

containing any class I or class II refrigerant or any non-exempt substitute refrigerant, excluding paragraph (i) of this section which applies only to appliances containing class I or class II refrigerants until January 1, 2019. Starting January 1, 2019, the provisions in § 82.157 apply in lieu of paragraph (i) of this section.

(a) *Appliances (except small appliances, MVACs, and MVAC-like appliances).* Before opening appliances (except small appliances, MVACs, and MVAC-like appliances) or disposing of such appliances, technicians must evacuate the refrigerant, including all the liquid refrigerant, to the levels in Table 1 using a recovery and/or recycling machine certified pursuant to § 82.158 unless the situations in paragraphs (a)(1) or (2) of this section apply. Technicians may evacuate either the entire appliance or the part to be serviced, if the refrigerant in the part can be isolated to a system receiver. A technician must verify that the applicable level of evacuation has been reached in the appliance or the part before it is opened.

(1) If evacuation of the appliance to the atmosphere is not to be performed after completion of the maintenance, service, or repair, and if the maintenance, service, or repair is not major as defined at § 82.152, the appliance must:

(i) Be evacuated to a pressure no higher than 0 psig before it is opened if it is a medium-, high- or very high-pressure appliance;

(ii) Be pressurized to a pressure no higher than 0 psig before it is opened if it is a low-pressure appliance. Persons must cover openings when isolation is not possible. Persons pressurizing low-pressure appliances that use refrigerants with boiling points at or below 85 degrees Fahrenheit at 29.9 inches of mercury (standard atmospheric pressure), must not use methods such as nitrogen that require subsequent purging. Persons pressurizing low-pressure appliances that use refrigerants with boiling points above 85 degrees Fahrenheit at 29.9 inches of mercury, must use heat to raise the internal pressure of the appliance as much as possible, but may use nitrogen to raise the internal pressure of the appliance from the level attainable through use of heat to atmospheric pressure; or

(iii) For the purposes of oil changes, be evacuated or pressurized to a pressure no higher than 5 psig, before it is opened; or drain the oil into a system receiver to be evacuated or pressurized to a pressure no higher than 5 psig.

(2) If leaks in the appliance make evacuation to the levels in Table 1 unattainable or would substantially contaminate the refrigerant being recovered, persons opening or disposing of the appliance must:

(i) Isolate leaking from non-leaking components wherever possible;

(ii) Evacuate non-leaking components to be opened or disposed of to the levels specified in Table 1; and

(iii) Evacuate leaking components to be opened or disposed of to the lowest level that can be attained without substantially contaminating the refrigerant. This level may not exceed 0 psig.

(3) *Recordkeeping.* As of January 1, 2018, technicians evacuating refrigerant from appliances with a full charge of more than 5 and less than 50 pounds of refrigerant for purposes of disposal of that appliance must keep records documenting the following for three years:

(i) The company name, location of the appliance, date of recovery, and type of refrigerant recovered for each appliance;

(ii) The total quantity of refrigerant, by type, recovered from all disposed appliances in each calendar month; and

(iii) The quantity of refrigerant, by type, transferred for reclamation and/or destruction, the person to whom it was transferred, and the date of transfer.

TABLE 1—REQUIRED LEVELS OF EVACUATION FOR APPLIANCES

[Except for small appliances, MVACs, and MVAC-like appliances]

Type of appliance	Inches of Hg vacuum (relative to standard atmospheric pressure of 29.9 inches Hg)	
	Using recovery and/or recycling equipment manufactured or imported before November 15, 1993	Using recovery and/or recycling equipment manufactured or imported on or after November 15, 1993
Very high-pressure appliance	0	0.
High-pressure appliance, or isolated component of such appliance, with a full charge of less than 200 pounds of refrigerant.	0	0.
High-pressure appliance, or isolated component of such appliance, with a full charge of 200 pounds or more of refrigerant.	4	10.
Medium-pressure appliance, or isolated component of such appliance, with a full charge of less than 200 pounds of refrigerant.	4	10.
Medium-pressure appliance, or isolated component of such appliance, with a full charge of 200 pounds or more of refrigerant.	4	15.
Low-pressure appliance	25 mm Hg absolute	25 mm Hg absolute.

(b) *Small appliances*. Before opening a small appliance or when disposing of a small appliance, persons must recover refrigerant, using a recovery and/or recycling machine certified pursuant to § 82.158, according to the following conditions:

(1) When using recovery equipment manufactured before November 15, 1993, recover 80 percent of the refrigerant in the small appliance; or

(2) When using recovery equipment manufactured on or after November 15, 1993, recover 90 percent of the refrigerant in the appliance when the compressor in the appliance is functioning, or 80 percent of the refrigerant in the appliance when the compressor in the appliance is not functioning; or

(3) Evacuate the appliance to four inches of mercury vacuum.

(c) *MVAC-like appliances*. Persons may only open MVAC-like appliances while properly using, as defined at § 82.32(e), recovery and/or recycling equipment certified pursuant to § 82.158(f) or § 82.36, as applicable. All persons recovering refrigerant from MVAC-like appliances for purposes of disposal of these appliances must evacuate the appliance in accordance with 40 CFR part 82, subpart B or reduce the system pressure to or below 102 mm of mercury vacuum.

(d) *MVACs*. All persons recovering refrigerant from MVACs for purposes of disposal of these appliances must evacuate the appliance in accordance with 40 CFR part 82, subpart B or reduce the system pressure to or below 102 mm of mercury vacuum.

(e) System-dependent equipment may not be used with appliances with a full charge of more than 15 pounds of refrigerant, unless the system-dependent equipment is permanently attached to the appliance as a pump-out unit.

(f) Persons who maintain, service, repair, or dispose of only appliances that they own and that contain pump-out units are exempt from the requirement to use certified, self-contained recovery and/or recycling equipment.

(g) All recovery and/or recycling equipment must be used in accordance with the manufacturer's directions unless such directions conflict with the requirements of this subpart.

(h) Refrigerant may be returned to the appliance from which it is recovered or to another appliance owned by the same person without being recycled or reclaimed, unless the appliance is an MVAC or MVAC-like appliance.

(i) The provisions in this paragraph (i) apply to owners and operators of appliances containing 50 or more pounds of class I and class II refrigerants only until January 1, 2019. The definitions in paragraph (j) of this section apply for purposes of this paragraph (i) in lieu of the definitions in § 82.152.

(1) Owners or operators of commercial refrigeration equipment normally containing more than 50 pounds of refrigerant must have leaks repaired in

accordance with paragraph (i)(9) of this section, if the appliance is leaking at a rate such that the loss of refrigerant will exceed 35 percent of the total charge during a 12-month period, except as described in paragraphs (i)(6), (i)(8), and (i)(10) of this section and paragraphs (i)(1)(i), (i)(1)(ii), and (i)(1)(iii) of this section. Repairs must bring the annual leak rate to below 35 percent.

(i) If the owners or operators of the federally-owned commercial refrigerant appliances determine that the leaks cannot be repaired in accordance with paragraph (i)(9) of this section and that an extension in accordance with the requirements discussed in this paragraph (i)(1)(i) of this section apply, they must document all repair efforts, and notify EPA of their inability to comply within the 30-day repair requirement, and the reason for the inability must be submitted to EPA in accordance with § 82.166(n). Such notification must be made within 30 days of discovering the leaks. EPA will determine if the extension requested in accordance with the requirements discussed in paragraph (i)(1)(i) of this section is justified. If the extension is not justified, EPA will notify the owner/operator within 30 days of receipt of the notification.

(ii) Owners or operators of federally-owned commercial refrigeration equipment may have more than 30 days to repair leaks if the refrigeration appliance is located in an area subject to radiological contamination or where the shutting down of the appliance will directly lead to radiological contamination. Only the additional time needed to conduct and complete repairs in a safe working environment will be permitted.

(iii) Owners or operators of federally-owned commercial refrigeration equipment requesting or who are granted time extensions under this paragraph must comply with paragraphs (i)(3) and (i)(4) of this section.

(2) The owners or operators of industrial process refrigeration equipment normally containing more than 50 pounds of refrigerant must have leaks repaired if the appliance is leaking at a rate such that the loss of refrigerant will exceed 35 percent of the total charge during a 12-month period in accordance with paragraph (i)(9) of this section, except as described in paragraphs (i)(6), (i)(7) and (i)(10) of this section, and paragraphs (i)(2)(i) and (i)(2)(ii) of this section. Repairs must bring annual leak rates to below 35 percent during a 12-month period. If the owners or operators of the industrial process refrigeration equipment determine that the leak rate cannot be brought to below 35 percent during a 12-month period within 30 days (or 120 days, where an industrial process shutdown in accordance with paragraph (i)(2)(ii) of this section is required,) and in accordance with paragraph (i)(9) of this section, and that an extension in accordance with the requirements discussed in this paragraph apply, the owners or operators of the appliance must document all repair efforts, and notify EPA of the reason for the inability in accordance with § 82.166(n) within 30 days of making this determination. Owners or operators who obtain an extension pursuant to this section or elect to utilize the additional time provided in paragraph (i)(2)(i) of this section, must conduct all necessary leak repairs, if any, that do not require any additional time beyond the initial 30 or 120 days.

(i) The owners or operators of industrial process refrigeration equipment are permitted more than 30 days (or 120 days where an industrial process shutdown in accordance with paragraph (i)(2)(ii) of this section is required) to repair leaks, if the necessary parts are unavailable or if requirements of other applicable federal, state, or local regulations make a repair within 30 or 120 days impossible. Only the additional time needed to receive delivery of the necessary parts or to comply with the pertinent regulations will be permitted.

(ii) Owners or operators of industrial process refrigeration equipment will have a 120-day repair period, rather than a 30-day repair period, to repair leaks in instances where an industrial process shutdown is needed to repair a leak or leaks from industrial process refrigeration equipment.

(3) Owners or operators of industrial process refrigeration equipment and owners or operators of federally-owned

commercial refrigeration equipment or of federally-owned comfort cooling appliances who are granted additional time under paragraphs (i)(1) or (i)(5) of this section, must have repairs performed in a manner that sound professional judgment indicates will bring the leak rate below the applicable allowable leak rate. When an industrial process shutdown has occurred or when repairs have been made while an appliance is mothballed, the owners or operators shall conduct an initial verification test at the conclusion of the repairs and a follow-up verification test. The follow-up verification test shall be conducted within 30 days of completing the repairs or within 30 days of bringing the appliance back on-line, if taken off-line, but no sooner than when the appliance has achieved normal operating characteristics and conditions. When repairs have been conducted without an industrial process shutdown or system mothballing, an initial verification test shall be conducted at the conclusion of the repairs, and a follow-up verification test shall be conducted within 30 days of the initial verification test. In all cases, the follow-up verification test shall be conducted at normal operating characteristics and conditions, unless sound professional judgment indicates that tests performed at normal operating characteristics and conditions will produce less reliable results, in which case the follow-up verification test shall be conducted at or near the normal operating pressure where practicable, and at or near the normal operating temperature where practicable.

(i) If the owners or operators of industrial process refrigeration equipment takes the appliance off-line, or if the owners or operators of federally-owned commercial refrigeration or of federally-owned comfort cooling appliances who are granted additional time under paragraphs (i)(1) or (i)(5) of this section take the appliance off-line, they cannot bring the appliance back on-line until an initial verification test indicates that the repairs undertaken in accordance with paragraphs (i)(1)(i), (ii), (iii), or (i)(2)(i) and (ii), or (5)(i), (ii), and (iii) of this section have been successfully completed, demonstrating the leak or leaks are repaired. The owners or operators of the industrial process refrigeration equipment, federally-owned commercial refrigeration appliances, or federally-owned comfort cooling appliances are exempted from this requirement only where the owners or operators will retrofit or retire the industrial process refrigeration equipment, federally-owned commercial refrigeration appliance, or federally-owned comfort cooling appliance in accordance with paragraph (i)(6) of this section. Under this exemption, the owner or operators may bring the industrial process refrigeration equipment, federally-owned commercial refrigeration appliance, or federally-owned comfort cooling appliance back on-line without successful completion of an initial verification test.

(ii) If the follow-up verification test indicates that the repairs to industrial process refrigeration equipment, federally-owned commercial refrigeration equipment, or federally-owned comfort cooling appliances have not been successful, the owner or operator must retrofit or retire the equipment in accordance with paragraph (i)(6) and any such longer time period as may apply under paragraphs (i)(7)(i), (ii) and (iii) or (i)(8)(i) and (ii) of this section. The owners and operators of the industrial process refrigeration equipment, federally-owned commercial refrigeration equipment, or federally-owned comfort cooling appliances are relieved of this requirement if the conditions of paragraphs (i)(3)(iv) and/or (i)(3)(v) of this section are met.

(iii) The owner or operator of industrial process refrigeration equipment that fails a follow-up verification test must notify EPA within 30 days of the failed follow-up verification test in accordance with § 82.166(n).

(iv) The owner or operator is relieved of the obligation to retrofit or replace the industrial process refrigeration equipment as discussed in paragraph (i)(6) of this section if second repair efforts to fix the same leaks that were the subject of the first repair efforts are successfully completed within 30 days or 120 days where an industrial process shutdown is required, after the initial failed follow-up verification

test. The second repair efforts are subject to the same verification requirements of paragraphs (i)(3), (i)(3) (i) and (ii) of this section. The owner or operator is required to notify EPA within 30 days of the successful follow-up verification test in accordance with § 82.166(n) and the owner or operator is no longer subject to the obligation to retrofit or replace the appliance that arose as a consequence of the initial failure to verify that the leak repair efforts were successful.

(v) The owner or operator of industrial process refrigeration equipment is relieved of the obligation to retrofit or replace the equipment in accordance with paragraph (i)(6) of this section if within 180 days of the initial failed follow-up verification test, the owner or operator establishes that the appliance's annual leak rate does not exceed the applicable allowable annual leak rate, in accordance with paragraph (i)(4) of this section. If the appliance's owner or operator establishes that the appliance's annual leak rate does not exceed the applicable allowable annual leak rate, the owner or operator is required to notify EPA within 30 days of that determination in accordance with § 82.166(n) and the owner or operator would no longer be subject to the obligation to retrofit or replace the equipment that arose as a consequence of the initial failure to verify that the leak repair efforts were successful.

(4) In the case of a failed follow-up verification test subject to paragraph (i)(3)(v) of this section, the determination of whether industrial process refrigeration equipment has an annual leak rate that exceeds the applicable allowable annual leak rate will be made in accordance with parameters identified by the owner or operator in its notice to EPA regarding the failure of the initial follow-up verification test, if those parameters are acceptable to EPA; otherwise by parameters selected by EPA. The determination must be based on the full charge for the affected industrial process refrigeration equipment. The leak rate determination parameters in the owner's or operator's notice will be considered acceptable unless EPA notifies the owners or operators within 30 days of receipt of the notice. Where EPA does not accept the parameters identified by the owner or operator in its notice, EPA will not provide additional time beyond the additional time permitted in paragraph (i)(3)(v) of this section unless specifically stated in the parameters selected by EPA.

(5) Owners or operators of comfort cooling appliances normally containing more than 50 pounds of refrigerant and not covered by paragraph (i)(1) or (i)(2) of this section must have leaks repaired in accordance with paragraph (i)(9) of this section if the appliance is leaking at a rate such that the loss of refrigerant will exceed 15 percent of the total charge during a 12-month period, except as described in paragraphs (i)(6), (i)(8) and (i)(10) of this section and paragraphs (i)(5)(i), (i)(5)(ii) and (i)(5)(iii) of this section. Repairs must bring the annual leak rate to below 15 percent.

(i) If the owners or operators of federally-owned comfort-cooling appliances determine that the leaks cannot be repaired in accordance with paragraph (i)(9) of this section and that an extension in accordance with the requirements discussed in paragraph (i)(5) of this section apply, they must document all repair efforts, and notify EPA of their inability to comply within the 30-day repair requirement, and the reason for the inability must be submitted to EPA in accordance with § 82.166(n). Such notification must be made within 30 days of discovering that leak repair efforts cannot be completed within 30 days.

(ii) Owners or operators of federally-owned comfort-cooling appliances may have more than 30 days to repair leaks where the refrigeration appliance is located in an area subject to radiological contamination or where the shutting down of the appliance will directly lead to radiological contamination. Only the additional time needed to conduct and complete work in a safe environment will be permitted.

(iii) Owners or operators of federally-owned comfort-cooling appliances requesting, or who are granted, time extensions under this paragraph must comply with paragraphs (i)(3) and (i)(4) of this section.

(6) Owners or operators are not required to repair leaks as provided in

paragraphs (i)(1), (i)(2), and (i)(5) of this section if, within 30 days of discovering a leak greater than the applicable allowable leak rate, or within 30 days of a failed follow-up verification test, or after making good faith efforts to repair the leaks as described in paragraph (i)(6)(i) of this section, they develop a one-year retrofit or retirement plan for the leaking appliance. Owners or operators who decide to retrofit the appliance must use a refrigerant or substitute with a lower or equivalent ozone-depleting potential than the previous refrigerant and must include such a change in the retrofit plan. Owners or operators who retire and replace the appliance must replace the appliance with an appliance that uses a refrigerant or substitute with a lower or equivalent ozone-depleting potential and must include such a change in the retirement plan. The retrofit or retirement plan (or a legible copy) must be kept at the site of the appliance. The original plan must be made available for EPA inspection upon request. The plan must be dated, and all work performed in accordance with the plan must be completed within one year of the plan's date, except as described in paragraphs (i)(6)(i), (i)(7), and (i)(8) of this section. Owners or operators are temporarily relieved of this obligation if the appliance has undergone system mothballing as defined in § 82.152.

(i) If the owner or operator has made good faith efforts to repair leaks from the appliance in accordance with paragraphs (i)(1), (i)(2), or (i)(5) of this section and has decided prior to completing a follow-up verification test, to retrofit or retire the appliance in accordance with paragraph (i)(6) of this section, the owner or operator must develop a retrofit or retirement plan within 30 days of the decision to retrofit or retire the appliance. The owner or operator must complete the retrofit or retirement of the appliance within one year and 30 days of when the owner or operator discovered that the leak rate exceeded the applicable allowable leak rate, except as provided in paragraphs (i)(7) and (i)(8) of this section.

(ii) In all cases, subject to paragraph (i)(6)(i) of this section, the written plan shall be prepared no later than 30 days after the owner or operator has determined to proceed with retrofitting or retiring the appliance. All reports required under § 82.166(o) shall be due at the time specified in the paragraph imposing the specific reporting requirement, or no later than 30 days after the decision to retrofit or retire the appliance, whichever is later.

(iii) In cases where the owner or operator of industrial process refrigeration equipment has made good faith efforts to retrofit or retire industrial process refrigeration equipment prior to August 8, 1995, and where these efforts are not complete, the owner or operator must develop a retrofit or retirement plan that will complete the retrofit or retirement of the affected appliance by August 8, 1996. This plan (or a legible copy) must be kept at the site of the appliance. The original must be made available for EPA inspection upon request. Where the conditions of paragraphs (i)(7) and (i)(8) of this section apply, and where the length of time necessary to complete the work is beyond August 8, 1996, all records must be submitted to EPA in accordance with § 82.166(o), as well as maintained onsite.

(7) The owners or operators of industrial process refrigeration equipment will be allowed additional time to complete the retrofit or retirement of industrial process refrigeration equipment if the conditions described in paragraphs (i)(7)(i) or (i)(7)(ii) of this section are met. The owners or operators of industrial process refrigeration equipment will be allowed additional time beyond the additional time provided in paragraph (i)(7)(ii) of this section if the conditions described in paragraph (i)(7)(iii) of this section are met.

(i) Additional time, to the extent reasonably necessary will be allowed for retrofitting or retiring industrial process refrigeration equipment due to delays occasioned by the requirements of other applicable federal, state, or local laws or regulations, or due to the unavailability of a suitable replacement refrigerant with a lower ozone depletion potential. If these circumstances apply, the owner or operator of the facility must notify EPA within six months after the 30-day period following the discovery of an exceedance of the 35 percent leak rate.

Records necessary to allow EPA to determine that these provisions apply and the length of time necessary to complete the work must be submitted to EPA in accordance with § 82.166(o), as well as maintained on-site. EPA will notify the owner or operator of its determination within 60 days of receipt the submittal.

(ii) An additional one-year period beyond the initial one-year retrofit period is allowed for industrial process refrigeration equipment where the following criteria are met:

(A) The new or the retrofitted industrial process refrigerant equipment is custom-built;

(B) The supplier of the appliance or one or more of its critical components has quoted a delivery time of more than 30 weeks from when the order is placed;

(C) The owner or operator notifies EPA within six months of the expiration of the 30-day period following the discovery of an exceedance of the 35 percent leak rate to identify the owner or operator, describe the appliance involved, explain why more than one year is needed, and demonstrate that the first two criteria are met in accordance with § 82.166(o); and

(D) The owner or operator maintains records that are adequate to allow a determination that the criteria are met.

(iii) The owners or operators of industrial process refrigeration equipment may request additional time to complete retrofitting or retiring industrial process refrigeration equipment beyond the additional one-year period if needed and where the initial additional one year was granted in accordance with paragraph (i)(7)(ii) of this section. The request shall be submitted to EPA before the end of the ninth month of the first additional year and shall include revisions of information required under § 82.166(o). Unless EPA objects to this request submitted in accordance with § 82.166(o) within 30 days of receipt, it shall be deemed approved.

(8) Owners or operators of federally-owned commercial or comfort-cooling appliances will be allowed an additional year to complete the retrofit or retirement of the appliances if the conditions described in paragraph (i)(8)(i) of this section are met, and will be allowed one year beyond the additional year if the conditions in paragraph (i)(8)(ii) of this section are met.

(i) Up to one additional one-year period beyond the initial one-year retrofit period is allowed for such equipment where the following criteria are met:

(A) Due to complications presented by the federal agency appropriations and/or procurement process, a delivery time of more than 30 weeks from the beginning of the official procurement process is quoted, or where the appliance is located in an area subject to radiological contamination and creating a safe working environment will require more than 30 weeks;

(B) The operator notifies EPA within six months of the expiration of the 30-day period following the discovery of an exceedance of the applicable allowable annual leak rate to identify the operator, describe the appliance involved, explain why more than one year is needed, and demonstrate that the first criterion is met in accordance with § 82.166(o); and

(C) The operator maintains records adequate to allow a determination that the criteria are met.

(ii) The owners or operators of federally-owned commercial or comfort-cooling appliances may request additional time to complete retrofitting, replacement or retiring such appliances beyond the additional one-year period if needed and where the initial additional one year was granted in accordance with paragraph (i)(8)(i) of this section. The request shall be submitted to EPA before the end of the ninth month of the first additional year and shall include revisions of information earlier submitted as required under § 82.166(o). Unless EPA objects to this request submitted in accordance with § 82.166(o) within 30 days of receipt, it shall be deemed approved.

(9) Owners or operators must repair leaks pursuant to paragraphs (i)(1), (i)(2) and (i)(5) of this section within 30 days after discovery, or within 30 days after when the leaks should have been discovered if the owners intentionally shielded themselves from information

which would have revealed a leak, unless granted additional time pursuant to § 82.156(i).

(10) The amount of time for owners and operators to complete repairs, retrofit plans or retrofits/replacements/retirements under paragraphs (i)(1), (i)(2), (i)(5), (i)(6), (i)(7), (i)(8), and (i)(9) of this section is temporarily suspended at the time an appliance is mothballed as defined in § 82.152. The time for owners and operators to complete repairs, retrofit plans, or retrofits/replacements will resume on the day the appliance is brought back online and is no longer considered mothballed. All initial and follow-up verification tests must be performed in accordance with paragraphs (i)(3), (i)(3)(i), and (i)(3)(ii) of this section.

(11) In calculating annual leak rates, purged refrigerant that is destroyed at a verifiable destruction efficiency of 98 percent or greater will not be counted toward the leak rate. Owners or operators destroying purged refrigerants must maintain information as set forth in § 82.166(p)(1) and submit to EPA, within 60 days after the first time such exclusion is used by that facility, information set forth in § 82.166(p)(2).

(j) *Definitions for the leak repair provisions in 82.156(i).* These definitions are not applicable to any other portion of subpart F other than 82.156(i). Along with paragraph (i) of this section, the definitions in this section apply only until January 1, 2019.

Appliance means, for the purposes of paragraph (i) of this section, any device which contains and uses a refrigerant and which is used for household or commercial purposes, including any air conditioner, refrigerator, chiller, or freezer.

Commercial refrigeration means, for the purposes of paragraph (i) of this section, the refrigeration appliances utilized in the retail food and cold storage warehouse sectors. Retail food includes the refrigeration equipment found in supermarkets, convenience stores, restaurants and other food service establishments. Cold storage includes the equipment used to store meat, produce, dairy products, and other perishable goods. All of the equipment contains large refrigerant charges, typically over 75 pounds.

Critical component means, for the purposes of paragraph (i) of this section, a component without which industrial process refrigeration equipment will not function, will be unsafe in its intended environment, and/or will be subject to failures that would cause the industrial process served by the refrigeration appliance to be unsafe.

Custom-built means, for the purposes of paragraph (i) of this section, that the equipment or any of its critical components cannot be purchased and/or installed without being uniquely designed, fabricated and/or assembled to satisfy a specific set of industrial process conditions.

Follow-up verification test means, for the purposes of paragraph (i) of this section, those tests that involve checking the repairs within 30 days of the appliance's returning to normal operating characteristics and conditions. Follow-up verification tests for appliances from which the refrigerant charge has been evacuated means a test conducted after the appliance or portion of the appliance has resumed operation at normal operating characteristics and conditions of temperature and pressure, except in cases where sound professional judgment dictates that these tests will be more meaningful if performed prior to the return to normal operating characteristics and conditions. A follow-up verification test with respect to repairs conducted without evacuation of the refrigerant charge means a reverification test conducted after the initial verification test and usually within 30 days of normal operating conditions. Where an appliance is not evacuated, it is only necessary to conclude any required changes in pressure, temperature or other conditions to return the appliance to normal operating characteristics and conditions.

Full charge means, for the purposes of paragraph (i) of this section, the amount of refrigerant required for normal operating characteristics and conditions of the appliance as determined by using one or a combination of the following four methods:

(i) Use the equipment manufacturer's determination of the correct full charge for the equipment;

(ii) Determine the full charge by making appropriate calculations based on component sizes, density of refrigerant, volume of piping, and other relevant considerations;

(iii) Use actual measurements of the amount of refrigerant added or evacuated from the appliance; and/or

(iv) Use an established range based on the best available data regarding the normal operating characteristics and conditions for the appliance, where the midpoint of the range will serve as the full charge, and where records are maintained in accordance with § 82.166(q).

Industrial process refrigeration means, for the purposes of paragraph (i) of this section, complex customized appliances used in the chemical, pharmaceutical, petrochemical and manufacturing industries. These appliances are directly linked to the industrial process. This sector also includes industrial ice machines, appliances used directly in the generation of electricity, and ice rinks. Where one appliance is used for both industrial process refrigeration and other applications, it will be considered industrial process refrigeration equipment if 50 percent or more of its operating capacity is used for industrial process refrigeration.

Industrial process shutdown means, for the purposes of paragraph (i) of this section, that an industrial process or facility temporarily ceases to operate or manufacture whatever is being produced at that facility.

Initial verification test means, for the purposes of paragraph (i) of this section, those leak tests that are conducted as soon as practicable after the repair is completed. An initial verification test, with regard to the leak repairs that require the evacuation of the appliance or portion of the appliance, means a test conducted prior to the replacement of the full refrigerant charge and before the appliance or portion of the appliance has reached operation at normal operating characteristics and conditions of temperature and pressure. An initial verification test with regard to repairs conducted without the evacuation of the refrigerant charge means a test conducted as soon as practicable after the conclusion of the repair work.

Leak rate means, for the purposes of paragraph (i) of this section, the rate at which an appliance is losing refrigerant, measured between refrigerant charges. The leak rate is expressed in terms of the percentage of the appliance's full charge that would be lost over a 12-month period if the current rate of loss were to continue over that period. The rate is calculated using only one of the following methods for all appliances located at an operating facility.

(i) Method 1. (A) Step 1. Take the number of pounds of refrigerant added to the appliance to return it to a full charge and divide it by the number of pounds of refrigerant the appliance normally contains at full charge;

(B) Step 2. Take the shorter of the number of days that have passed since the last day refrigerant was added or 365 days and divide that number by 365 days;

(C) Step 3. Take the number calculated in Step 1. and divide it by the number calculated in Step 2.; and

(D) Step 4. Multiply the number calculated in Step 3. by 100 to calculate a percentage. This method is summarized in the following formula:

$$\text{Leak rate (\% per year)} = \frac{\text{pounds of refrigerant added}}{\text{pounds of refrigerant in full charge}} \times \frac{365\ \textit{days/year}}{\textit{shorter of: \# days since refrigerant last added or 365 days}} \times 100\%$$

(ii) Method 2. (A) Step 1. Take the sum of the quantity of refrigerant added to the appliance over the previous 365-day period (or over the period that has passed since leaks in the appliance were last repaired, if that period is less than one year),

(B) Step 2. Divide the result of Step 1. by the quantity (*e.g.*, pounds) of refrigerant the appliance normally contains at full charge, and

(C) Step 3. Multiply the result of Step 2. by 100 to obtain a percentage. This method is summarized in the following formula:

$$\text{Leak rate (\% per year)} = \frac{\text{pounds of refrigerant added over past 365 days (or since leaks were last repaired, if that period is less than one year)}}{\text{pounds of refrigerant in full charge}} \times 100\%$$

Normal operating characteristics or conditions means, for the purposes of paragraph (i) of this section, temperatures, pressures, fluid flows, speeds and other characteristics that would normally be expected for a given process load and ambient condition during operation. Normal operating characteristics and conditions are marked by the absence of atypical conditions affecting the operation of the refrigeration appliance.

Normally containing a quantity of refrigerant means, for the purposes of paragraph (i) of this section, containing the quantity of refrigerant within the appliance or appliance component when the appliance is operating with a full charge of refrigerant.

Refrigerant means, for the purposes of paragraph (i) of this section, any substance consisting in part or whole of a class I or class II ozone-depleting substance that is used for heat transfer purposes and provides a cooling effect.

Substitute means, for the purposes of paragraph (i) of this section, any chemical or product, whether existing or new, that is used by any person as an EPA approved replacement for a class I or II ozone-depleting substance in a given refrigeration or air-conditioning end-use.

Suitable replacement refrigerant means, for the purposes of paragraph (i) of this section, a refrigerant that is acceptable under section 612(c) of the Clean Air Act Amendments of 1990 and all regulations promulgated under that section, compatible with other materials with which it may come into contact, and able to achieve the temperatures required for the affected industrial process in a technically feasible manner.

System mothballing means, for the purposes of paragraph (i) of this section, the intentional shutting down of a refrigeration appliance undertaken for an extended period of time by the owners or operators of that facility, where the refrigerant has been evacuated from the appliance or the affected isolated section of the appliance, at least to atmospheric pressure.

[58 FR 28712, May 14, 1993, as amended at 59 FR 42956, 42962, Aug. 19, 1994; 59 FR 55926, Nov. 9, 1994; 60 FR 40440, Aug. 8, 1995; 68 FR 43807, July 24, 2003; 69 FR 11979, Mar. 12, 2004; 70 FR 1991, Jan. 11, 2005; 79 FR 29690, May 23, 2014; 8a FR 82354, Nov. 18, 2016]

§ 82.157 Appliance maintenance and leak repair.

(a) *Applicability*. This section applies as of January 1, 2019. As of April 10, 2020, this section applies only to appliances with a full charge of 50 or more pounds of any class I or class II refrigerant or blend containing a class I or class II refrigerant. Notwithstanding the use of the term refrigerant in this section, the requirements of this section do not apply to appliances containing solely substitute refrigerants. Unless otherwise specified, the requirements of this section apply to the owner or operator of the appliance.

(b) *Leak Rate Calculation*. Persons adding or removing refrigerant from an appliance must, upon conclusion of that service, provide the owner or operator with documentation that meets the applicable requirements of paragraph (l)(2) of this section. The owner or operator must calculate the leak rate every time refrigerant is added to an appliance unless the addition is made immediately following a retrofit,

installation of a new appliance, or qualifies as a seasonal variance.

(c) *Requirement to Address Leaks through Appliance Repair, or Retrofitting or Retiring an Appliance.* (1) Owners or operators must repair appliances with a leak rate over the applicable leak rate in this paragraph in accordance with paragraphs (d) through (f) of this section unless the owner or operator elects to retrofit or retire the appliance in compliance with paragraphs (h) and (i) of this section. If the owner or operator elects to repair leaks, but fails to bring the leak rate below the applicable leak rate, the owner or operator must create and implement a retrofit or retirement plan in accordance with paragraphs (h) and (i) of this section.

(2) Leak Rates:

(i) 20 percent leak rate for commercial refrigeration equipment;

(ii) 30 percent leak rate for industrial process refrigeration equipment; and

(iii) 10 percent leak rate for comfort cooling appliances or other appliances with a full charge of 50 or more pounds of refrigerant not covered by (c)(2)(i) or (ii) of this section.

(d) *Appliance Repair.* Owners or operators must identify and repair leaks in accordance with this paragraph within 30 days (or 120 days if an industrial process shutdown is required) of when refrigerant is added to an appliance exceeding the applicable leak rate in paragraph (c) of this section.

(1) A certified technician must conduct a leak inspection, as described in paragraph (g) of this section, to identify the location of leaks.

(2) Leaks must be repaired such that the leak rate is brought below the applicable leak rate. This must be confirmed by the leak rate calculation performed upon the next refrigerant addition. The leaks will be presumed to be repaired if there is no further refrigerant addition for 12 months after the repair or if the leak inspections required under paragraph (g) do not find any leaks in the appliance. Repair of leaks must be documented by both an initial and a follow-up verification test or tests.

(3) The time frames in paragraphs (d) through(f) of this section are temporarily suspended when an appliance is mothballed. The time will resume on the day additional refrigerant is added to the appliance (or component of an appliance if the leaking component was isolated).

(e) *Verification tests.* The owner or operator must conduct both initial and follow-up verification tests on each leak that was repaired under paragraph (d) of this section.

(1) *Initial verification test.* Unless granted additional time, an initial verification test must be performed within 30 days (or 120 days if an industrial process shutdown is required) of an appliance exceeding the applicable leak rate in paragraph (c) of this section. An initial verification test must demonstrate that leaks where a repair attempt was made are repaired.

(i) For repairs that can be completed without the need to open or evacuate the appliance, the test must be performed after the conclusion of the repair work and before any additional refrigerant is added to the appliance.

(ii) For repairs that require the evacuation of the appliance or portion of the appliance, the test must be performed before adding any refrigerant to the appliance.

(iii) If the initial verification test indicates that the repairs have not been successful, the owner or operator may conduct as many additional repairs and initial verification tests as needed within the applicable time period.

(2) *Follow-up verification test.* A follow-up verification test must be performed within 10 days of the successful initial verification test or 10 days of the appliance reaching normal operating characteristics and conditions (if the appliance or isolated component was evacuated for the repair(s)). Where it is unsafe to be present or otherwise impossible to conduct a follow-up verification test when the system is operating at normal operating characteristics and conditions, the verification test must, where practicable, be conducted prior to the system returning to normal operating characteristics and conditions.

(i) A follow-up verification test must demonstrate that leaks where a repair attempt was made are repaired. If the follow-up verification test indicates

that the repairs have not been successful, the owner or operator may conduct as many additional repairs and verification tests as needed to bring the appliance below the leak rate within the applicable time period and to verify the repairs.

(f) *Extensions to the appliance repair deadlines*. Owners or operators are permitted more than 30 days (or 120 days if an industrial process shutdown is required) to comply with paragraphs (d) and (e) of this section if they meet the requirements of (f)(1) through (4) of this section or the appliance is mothballed. The request will be considered approved unless EPA notifies the owners or operators otherwise.

(1) One or more of the following conditions must apply:

(i) The appliance is located in an area subject to radiological contamination or shutting down the appliance will directly lead to radiological contamination. Additional time is permitted to the extent needed to conduct and finish repairs in a safe working environment.

(ii) Requirements of other applicable Federal, state, or local regulations make a repair within 30 days (or 120 days if an industrial process shutdown is required) impossible. Additional time is permitted to the extent needed to comply with the pertinent regulations.

(iii) Components that must be replaced as part of the repair are not available within 30 days (or 120 days if an industrial process shutdown is required). Additional time is permitted up to 30 days after receiving delivery of the necessary components, not to exceed 180 days (or 270 days if an industrial process shutdown is required) from the date the appliance exceeded the applicable leak rate.

(2) Repairs to leaks that the technician has identified as significantly contributing to the exceedance of the leak rate and that do not require additional time must be completed and verified within the initial 30 day repair period (or 120 day repair period if an industrial process shutdown is required);

(3) The owner or operator must document all repair efforts and the reason for the inability to make the repair within the initial 30 day repair period (or 120 day repair period if an industrial process shutdown is required); and

(4) The owner or operator must request an extension from EPA at the address specified in paragraph (m) of this section within 30 days (or 120 days if an industrial process shutdown is required) of the appliance exceeding the applicable leak rate in paragraph (c) of this section. Extension requests must include: Identification and address of the facility; the name of the owner or operator of the appliance; the leak rate; the method used to determine the leak rate and full charge; the date the appliance exceeded the applicable leak rate; the location of leak(s) to the extent determined to date; any repair work that has been performed thus far, including the date that work was completed; the reasons why more than 30 days (or 120 days if an industrial process shutdown is required) are needed to complete the repair; and an estimate of when the work will be completed. If the estimated completion date is to be extended, a new estimated date of completion and documentation of the reason for that change must be submitted to EPA within 30 days of identifying that the completion date must be extended. The owner or operator must keep a dated copy of this submission.

(g) *Leak Inspections*. (1) The owner or operator must conduct a leak inspection in accordance with the following schedule on any appliance exceeding the applicable leak rate in paragraph (c)(2) of this section.

(i) For commercial refrigeration and industrial process refrigeration appliances with a full charge of 500 or more pounds, leak inspections must be conducted once every three months until the owner or operator can demonstrate through the leak rate calculations required under paragraph (b) of this section that the appliance has not leaked in excess of the applicable leak rate for four quarters in a row.

(ii) For commercial refrigeration and industrial process refrigeration appliances with a full charge of 50 or more pounds but less than 500 pounds, leak inspections must be conducted once per calendar year until the owner or operator can demonstrate through the leak

rate calculations required under paragraph (b) of this section that the appliance has not leaked in excess of the applicable leak rate for one year.

(iii) For comfort cooling appliances and other appliances not covered by paragraphs (g)(1)(i) and (ii) of this section, leak inspections must be conducted once per calendar year until the owner or operator can demonstrate through the leak rate calculations required under paragraph (b) of this section that the appliance has not leaked in excess of the applicable leak rate for one year.

(2) Leak inspections must be conducted by a certified technician using method(s) determined by the technician to be appropriate for that appliance.

(3) All visible and accessible components of an appliance must be inspected, with the following exceptions:

(i) Where components are insulated, under ice that forms on the outside of equipment, underground, behind walls, or are otherwise inaccessible;

(ii) Where personnel must be elevated more than two meters above a support surface; or

(iii) Where components are unsafe to inspect, as determined by site personnel.

(4) Quarterly or annual leak inspections are not required on appliances, or portions of appliances, continuously monitored by an automatic leak detection system that is audited or calibrated annually. An automatic leak detection system may directly detect refrigerant in air, monitor its surrounding in a manner other than detecting refrigerant concentrations in air, or monitor conditions of the appliance.

(i) For systems that directly detect the presence of a refrigerant in air, the system must:

(A) Only be used to monitor components located inside an enclosed building or structure;

(B) Have sensors or intakes placed so that they will continuously monitor the refrigerant concentrations in air in proximity to the compressor, evaporator, condenser, and other areas with a high potential for a refrigerant leak;

(C) Accurately detect a concentration level of 10 parts per million of vapor of the specific refrigerant or refrigerants used in the refrigeration appliance(s); and

(D) Alert the owner or operator when a refrigerant concentration of 100 parts per million of vapor of the specific refrigerant or refrigerants used in the refrigeration appliance(s) is reached.

(ii) For a system that monitors its surrounding in a manner other than detecting refrigerant concentrations in air or monitor conditions of the appliance, the system must automatically alert the owner or operator when measurements indicate a loss of 50 pounds of refrigerant or 10 percent of the full charge, whichever is less.

(iii) When automatic leak detection equipment is only being used to monitor portions of an appliance, the remainder of the appliance continues to be subject to any applicable leak inspection requirements.

(h) *Retrofit or retirement plans.* (1) The owner or operator must create a retrofit or retirement plan within 30 days of:

(i) an appliance leaking above the applicable leak rate in paragraph (c) of this section if the owner or operator intends to retrofit or retire rather than repair the leak;

(ii) an appliance leaking above the applicable leak rate in paragraph (c) of this section if the owner or operator fails to take any action to identify or repair the leak; or

(iii) an appliance continues to leak above the applicable leak rate after having conducted the required repairs and verification tests under paragraphs (d) and (e) of this section.

(2) A retrofit or retirement plan must, at a minimum, contain the following information:

(i) Identification and location of the appliance;

(ii) Type and full charge of the refrigerant used in the appliance;

(iii) Type and full charge of the refrigerant to which the appliance will be converted, if retrofitted;

(iv) Itemized procedure for converting the appliance to a different refrigerant, including changes required for compatibility with the new substitute, if retrofitted;

(v) Plan for the disposition of recovered refrigerant;

(vi) Plan for the disposition of the appliance, if retired; and

(vii) A schedule, not to exceed one-year, for completion of the appliance retrofit or retirement.

(3) The retrofit or retirement plan must be signed by an authorized company official, dated, accessible at the site of the appliance in paper copy or electronic format, and available for EPA inspection upon request.

(4) All identified leaks must be repaired as part of any retrofit under such a plan.

(5)(i) Unless granted additional time, all work performed in accordance with the plan must be finished within one year of the plan's date (not to exceed 13 months from when the plan was required in paragraph (h)(1) of this section).

(ii) The owner or operator may request that EPA relieve it of the obligation to retrofit or retire an appliance if the owner or operator can establish within 180 days of the plan's date that the appliance no longer exceeds the applicable leak rate and if the owner or operator agrees in writing to repair all identified leaks within one year of the plan's date consistent with paragraph (h)(4) and (h)(5)(i) of this section. The owner or operator must submit to EPA the retrofit or retirement plan as well as the following information: The date that the requirement to develop a retrofit or retirement plan was triggered; the leak rate; the method used to determine the leak rate and full charge; the location of the leak(s) identified in the leak inspection; a description of repair work that has been completed; a description of repair work that has not been completed; a description of why the repair was not conducted within the time frames required under paragraphs (d) and (f) of this section; and a statement signed by an authorized official that all identified leaks will be repaired and an estimate of when those repairs will be completed (not to exceed one year from date of the plan). The request will be considered approved unless EPA notifies the owners or operators within 60 days of receipt of the request that it is not approved.

(i) *Extensions to the one-year retrofit or retirement schedule.* Owners or operators may request more than one year to comply with paragraph (h) of this section if they meet the requirements of this paragraph. The request will be considered approved unless EPA notifies the owners or operators within 60 days of receipt of the request that it is not approved. The request must be submitted to EPA at the address specified in § 82.157(m) within seven months of discovering the appliance exceeded the applicable leak rate. The request must include the identification of the appliance; name of the owner or operator; the leak rate; the method used to determine the leak rate and full charge; the date the appliance exceeded the applicable leak rate; the location of leaks(s) to the extent determined to date; any repair work that has been finished thus far, including the date that work was finished; a plan to finish the retrofit or retirement of the appliance; the reasons why more than one year is necessary to retrofit or retire the appliance; the date of notification to EPA; and an estimate of when retrofit or retirement work will be finished. A dated copy of the request must be available on-site in either electronic or paper copy. If the estimated completion date is to be revised, a new estimated date of completion and documentation of the reason for that change must be submitted to EPA at the address specified in § 82.157(m) within 30 days. Additionally, the time frames in paragraphs (h) and (i) of this section are temporarily suspended when an appliance is mothballed. The time will resume running on the day additional refrigerant is added to the appliance (or component of an appliance if the leaking component was isolated).

(1) *Extensions available to any appliance.* Owners or operators of commercial refrigeration, industrial process refrigeration, comfort-cooling, or other equipment are automatically allowed 18 months to retire an appliance if the replacement appliance uses a substitute refrigerant exempted under § 82.154(a).

(2) *Extensions available to industrial process refrigeration.* Owners or operators of industrial process refrigeration equipment may request additional time beyond the one-year period in paragraph (h) of this section to finish

the retrofit or retirement under the following circumstances.

(i) Requirements of other applicable Federal, state, or local regulations make a retrofit or retirement within one year impossible. Additional time is permitted to the extent needed to comply with the pertinent regulations;

(ii) The new or the retrofitted equipment is custom-built as defined in this subpart and the supplier of the appliance or one of its components has quoted a delivery time of more than 30 weeks from when the order is placed. The appliance or appliance components must be installed within 120 days after receiving delivery of the necessary parts; or

(iii) After receiving an extension under paragraph (i)(2)(ii) of this section, owners or operators may request additional time if necessary to finish the retrofit or retirement of equipment. The request must be submitted to EPA before the end of the ninth month of the initial extension and must include the same information submitted for that extension, with any necessary revisions. A dated copy of the request must be available on-site in either electronic or paper copy. The request will be considered approved unless EPA notifies the owners or operators within 60 days of receipt of the request that it is not approved.

(3) *Extensions available to Federally owned equipment*. Owners or operators of federally owned commercial or comfort-cooling equipment may request an additional year beyond the one-year period in paragraph (h) of this section to finish the retrofit or retirement under the following circumstances:

(i) A delivery time of more than 30 weeks from the beginning of the official procurement process is quoted due to complications presented by the Federal agency appropriations and/or procurement process;

(ii) The appliance is located in an area subject to radiological contamination and creating a safe working environment will require more than 30 weeks; or

(iii) After receiving a one-year extension under paragraphs (i)(3)(i) or (ii) of this section, additional time may be requested if necessary to finish the retrofit or retirement of equipment. The request must be submitted to EPA before the end of the ninth month of the one-year extension and must include the same information submitted for that one-year extension, with any necessary revisions. A dated copy of the request must be available on-site in either electronic or paper copy. The request will be considered approved unless EPA notifies the owners or operators within 60 days of receipt of the request that it is not approved.

(j) *Chronically leaking appliances*. Owners or operators of appliances containing 50 pounds or more of refrigerant that leak 125 percent or more of the full charge in a calendar year must submit a report to EPA at the address in paragraph (m) of this section. This report must be submitted by March 1 of the subsequent year and describe efforts to identify leaks and repair the appliance.

(k) *Purged refrigerant*. In calculating annual leak rates, purged refrigerant that is destroyed at a verifiable destruction efficiency of 98 percent or greater will not be counted toward the leak rate.

(l) *Recordkeeping*. All records identified in this paragraph must be kept for at least three years in electronic or paper format, unless otherwise specified.

(1) Owners or operators must determine the full charge of all appliances with 50 or more pounds of refrigerant and maintain the following information for each appliance until three years after the appliance is retired:

(i) The identification of the owner or operator of the appliance;

(ii) The address where the appliance is located;

(iii) The full charge of the appliance and the method for how the full charge was determined;

(iv) If using method 4 (using an established range) for determining full charge, records must include the range for the full charge of the appliance, its midpoint, and how the range was determined;

(v) Any revisions of the full charge, how they were determined, and the dates such revisions occurred.

(2) Owners or operators must maintain a record including the following information for each time an appliance

with a full charge of 50 or more pounds is maintained, serviced, repaired, or disposed of, when applicable. If the maintenance, service, repair, or disposal is done by someone other than the owner or operator, that person must provide a record containing the following information, with the exception of (l)(2)(vii) and (viii) of this section, to the owner or operator:

(i) The identity and location of the appliance;

(ii) The date of the maintenance, service, repair, or disposal performed;

(iii) The part(s) of the appliance being maintained, serviced, repaired, or disposed;

(iv) The type of maintenance, service, repair, or disposal performed for each part;

(v) The name of the person performing the maintenance, service, repair, or disposal;

(vi) The amount and type of refrigerant added to, or in the case of disposal removed from, the appliance;

(vii) The full charge of the appliance; and

(viii) The leak rate and the method used to determine the leak rate (not applicable when disposing of the appliance, following a retrofit, installing a new appliance, or if the refrigerant addition qualifies as a seasonal variance).

(3) Owners or operators must keep records of leak inspections that include the date of inspection, the method(s) used to conduct the leak inspection, a list of the location of each leak that was identified, and a certification that all visible and accessible parts of the appliance were inspected. Technicians conducting leak inspections must, upon conclusion of that service, provide the owner or operator of the appliance with documentation that meets these requirements.

(4) If using an automatic leak detection system, the owner or operator must maintain records regarding the installation and the annual audit and calibration of the system, a record of each date the monitoring system identified a leak, and the location of the leak.

(5) Owners or operators must maintain records of the dates and results of all initial and follow-up verification tests. Records must include the location of the appliance, the date(s) of the verification tests, the location(s) of all repaired leaks that were tested, the type(s) of verification test(s) used, and the results of those tests. Technicians conducting initial or follow-up verification tests must, upon conclusion of that service, provide the owner or operator of the appliance with documentation that meets these requirements.

(6) Owners or operators must maintain retrofit or retirement plans developed in accordance with paragraph (h) of this section.

(7) Owners or operators must maintain retrofit and/or extension requests submitted to EPA in accordance with paragraph (i) of this section.

(8) Owners or operators that suspend the deadlines in this section by mothballing an appliance must keep records documenting when the appliance was mothballed and when additional refrigerant was added to the appliance (or isolated component).

(9) Owners or operators who exclude purged refrigerants that are destroyed from annual leak rate calculations must maintain records to support the amount of refrigerant claimed as sent for destruction. Records must be based on a monitoring strategy that provides reliable data to demonstrate that the amount of refrigerant claimed to have been destroyed is not greater than the amount of refrigerant actually purged and destroyed and that the 98 percent or greater destruction efficiency is met. Records must include flow rate, quantity or concentration of the refrigerant in the vent stream, and periods of purge flow. Records must include:

(i) The identification of the facility and a contact person, including the address and telephone number;

(ii) A description of the appliance, focusing on aspects relevant to the purging of refrigerant and subsequent destruction;

(iii) A description of the methods used to determine the quantity of refrigerant sent for destruction and type of records that are being kept by the owners or operators where the appliance is located;

(iv) The frequency of monitoring and data-recording; and

(v) A description of the control device, and its destruction efficiency.

(10) Owners or operators that exclude additions of refrigerant due to seasonal variance from their leak rate calculation must maintain records stating that they are using the seasonal variance flexibility and documenting the amount added and removed under § 82.157(l)(2).

(11) Owners or operators that submit reports to EPA in accordance with paragraph (m) of this section must maintain copies of the submitted reports and any responses from EPA.

(m) *Reporting*. All notifications must be submitted electronically to *608reports@epa.gov* unless the notification contains confidential business information. If the notification contains confidential business information, the information should be submitted to: Section 608 Program Manager; Stratospheric Protection Division; Mail Code: 6205T; U.S. Environmental Protection Agency; 1200 Pennsylvania Avenue NW., Washington, DC 20460.

(1) Owners or operators must notify EPA at this address in accordance with paragraph (f) of this section when seeking an extension of time to complete repairs.

(2) Owners or operators must notify EPA at this address in accordance with paragraph (h)(5)(ii) of this section when seeking relief from the obligation to retrofit or retire an appliance.

(3) Owners or operators must notify EPA at this address in accordance with paragraph (i) of this section when seeking an extension of time to complete the retrofit or retirement of an appliance.

(4) Owners or operators must notify EPA at this address in accordance with paragraph (j) of this section for any appliance that leaks 125 percent or more of the full charge in a calendar year.

(5) When excluding purged refrigerants that are destroyed from annual leak rate calculations, owners or operators must notify EPA at this address within 60 days after the first time the exclusion is used by the facility where the appliance is located. The report must include the information included in paragraph (l)(9) of this section.

[81 FR 82356, Nov. 18, 2016, as amended at 85 FR 14171, Apr. 10, 2020]

§ 82.158 Standards for recovery and/or recycling equipment.

Starting January 1, 2017, this section applies to recovery and/or recycling equipment for use during the maintenance, service, repair, or disposal of appliances containing any class I or class II refrigerant or any non-exempt substitute refrigerant.

(a) No person may manufacture or import recovery and/or recycling equipment for use during the maintenance, service, repair, or disposal of appliances unless the equipment is certified in accordance with this section.

(b) No person may alter the design of certified refrigerant recovery and/or recycling equipment in a way that would affect the equipment's ability to meet the certification standards in this section without resubmitting the altered design for certification testing. Until it is tested and shown to meet the certification standards in this section, equipment so altered will be considered uncertified.

(c) Recovery and/or recycling equipment manufactured or imported before November 15, 1993, intended for use during the maintenance, service, repair, or disposal of appliances (except small appliances, MVACs, and MVAC-like appliances) will be considered certified if it is capable of achieving the level of evacuation specified in Table 2 of this section when tested using a properly calibrated pressure gauge.

(d) Manufacturers and importers of recovery and/or recycling equipment must have such equipment certified by an approved equipment testing organization as follows:

(1) Recovery and/or recycling equipment manufactured or imported on or after November 15, 1993, and before September 22, 2003, intended for use during the maintenance, service, repair, or disposal of appliances (except small appliances, MVACs, and MVAC-like appliances) must be certified by an approved equipment testing organization as being capable of achieving the level of evacuation specified in Table 2 of this section under the conditions of appendix B1 of this subpart (based upon the ARI Standard 740–1993, *Performance of Refrigerant Recovery, Recycling and/or Reclaim Equipment*).

(2) Recovery and/or recycling equipment manufactured or imported on or after September 22, 2003, and before January 1, 2017, intended for use during the maintenance, service, repair, or disposal of appliances (except small appliances, MVACs, and MVAC-like appliances) must be certified by an approved equipment testing organization as being capable of achieving the level of evacuation specified in Table 2 of this section under the conditions of appendix B2 of this subpart (based upon the ARI Standard 740–1995, *Performance of Refrigerant Recovery, Recycling and/or Reclaim Equipment*).

(3) Recovery and/or recycling equipment manufactured or imported on or after January 1, 2017, intended for use during the maintenance, service, repair, or disposal of appliances (except small appliances, MVACs, and MVAC-like appliances) must be certified by an approved equipment testing organization as being capable of achieving the level of evacuation specified in Table 2 of this section under the conditions of appendix B3 (for non-flammable refrigerants) based upon AHRI Standard 740–2016 or appendix B4 (for flammable refrigerants) of this subpart.

TABLE 2—LEVELS OF EVACUATION WHICH MUST BE ACHIEVED BY RECOVERY AND/OR RECYCLING EQUIPMENT

[Except for small appliances, MVACs, and MVAC-like appliances.]

Type of appliance with which recovery and/or recycling machine is intended to be used	Inches of Hg vacuum (relative to standard atmospheric pressure of 29.9 inches Hg)	
	Manufactured or imported before November 15, 1993	Manufactured or imported on or after November 15, 1993
HCFC–22 appliances, or isolated component of such appliances, with a full charge of less than 200 pounds of refrigerant.	0	0.
HCFC–22 appliances, or isolated component of such appliances, with a full charge of 200 pounds or more of refrigerant.	4	10.
Very high-pressure appliances	0	0.
Other high-pressure appliances, or isolated component of such appliances, with a full charge of less than 200 pounds of refrigerant.	4	10.
Other high-pressure appliances, or isolated component of such appliances, with a full charge of 200 pounds or more of refrigerant.	4	15.
Medium-pressure appliances, or isolated component of such appliances, with a full charge of less than 200 pounds of refrigerant.	4	10.
Medium-pressure appliances, or isolated component of such appliances, with a full charge of 200 pounds or more of refrigerant.	4	15.
Low-pressure appliances	25 mm Hg absolute	25 mm Hg absolute.

(4) Recovery and/or recycling equipment whose recovery efficiency cannot be tested according to the procedures in appendix B1, B2, B3, or B4 of this subpart as applicable may be certified if an approved third-party testing organization adopts and performs a test that demonstrates, to the satisfaction of the Administrator, that the recovery efficiency of that equipment is equal to or better than that of equipment that:

(i) Is intended for use with the same type of appliance; and

(ii) Achieves the level of evacuation in Table 2. The manufacturer's instructions must specify how to achieve the required recovery efficiency, and the equipment must be tested when used according to these instructions.

(5) The equipment must meet the minimum requirements for certification under appendix B1, B2, B3, or B4 of this subpart as applicable.

(6) If the equipment is equipped with a noncondensables purge device, the equipment must not release more than 3 percent of the quantity of refrigerant being recycled through noncondensables purging under the conditions of appendix B1, B2, B3, or B4 of this subpart as applicable.

(7) The equipment must be equipped with low-loss fittings on all hoses.

(8) The equipment must have its liquid recovery rate and its vapor recovery rate measured under the conditions of appendix B1, B2, B3, or B4 as applicable, unless the equipment has no inherent liquid or vapor recovery rate.

(e) *Small Appliances*. Equipment used during the maintenance, service, repair, or disposal of small appliances must be certified by an approved equipment testing organization to be capable of recovering 90 percent of the refrigerant in the test stand when the compressor of the test stand is operational and 80 percent of the refrigerant when the compressor of the test stand is not operational, when used in accordance with the manufacturer's instructions under the conditions of appendix C, Method for Testing Recovery Devices for Use with Small Appliances.

(1) Equipment manufactured or imported before November 15, 1993, will be considered certified if it is capable of either recovering 80 percent of the refrigerant in the system, whether or not the compressor of the test stand is operational, or achieving a four-inch vacuum when tested using a properly calibrated pressure gauge.

(2) Equipment manufactured or imported on or after November 15, 1993, may also be certified if it is capable of achieving a four-inch vacuum under the conditions of appendix B1 of this subpart, based upon ARI Standard 740–1993.

(3) Equipment manufactured or imported on or after September 22, 2003, and before January 1, 2017, may also be certified if it is capable of achieving a four-inch vacuum under the conditions of appendix B2 of this subpart, based upon ARI Standard 740–1995.

(4) Equipment manufactured or imported on or after January 1, 2017, may also be certified if it is capable of achieving a four-inch vacuum under the conditions of appendix B3 of this subpart (for non-flammable refrigerants), based upon AHRI Standard 740–2016 or appendix B4 of this subpart (for flammable refrigerants), based upon both AHRI Standard 740–2016 and UL 1963, Supplement SB, *Requirements for Refrigerant Recovery/Recycling Equipment Intended for Use with a Flammable Refrigerant*, Fourth Edition, June 1, 2011.

(5) Equipment used to evacuate any class I or class II refrigerant or any non-exempt substitute refrigerant from small appliances before they are disposed of may also be certified if it is capable of achieving a four-inch vacuum when tested using a properly calibrated pressure gauge.

(f) *MVAC-like appliances*. (1) Manufacturers and importers of recovery and/or recycling equipment intended for use during the maintenance, service, repair, or disposal of MVAC-like appliances must certify such equipment in accordance with subpart B of this part.

(2) Equipment manufactured or imported before November 15, 1993, intended for use during the maintenance, service, or repair of MVAC-like appliances must be capable of reducing the system pressure to 102 mm of mercury vacuum under the conditions of appendix A of subpart B of this part.

(g) *MVACs*. Manufacturers and importers of recovery and/or recycling equipment intended for use during the maintenance, service, repair, or disposal of MVACs must certify such equipment in accordance with subpart B of this part.

(h) *Labeling*. (1) Manufacturers and importers of equipment certified under paragraphs (d) and (e) of this section must place a label on each piece of equipment stating the following:

THIS EQUIPMENT HAS BEEN CERTIFIED BY [APPROVED EQUIPMENT TESTING ORGANIZATION] TO MEET EPA's MINIMUM REQUIREMENTS FOR RECYCLING OR RECOVERY EQUIPMENT INTENDED FOR USE WITH [APPROPRIATE CATEGORY OF APPLIANCE].

(2) The label must also show the date of manufacture and the serial number (if applicable) of the equipment. The label must be affixed in a readily visible or accessible location, be made of a material expected to last the lifetime of the equipment, present required information in a way that it is likely to remain legible for the lifetime of the equipment, and be affixed in such a way that it cannot be removed from the equipment without damage to the label.

(i) *Retesting*. At least once every three years, manufacturers or importers of certified recovery and/or recycling equipment intended for use during the maintenance, service, or repair of appliances (except MVACs or MVAC-like appliances) or during the disposal of appliances (except small appliances, MVACs, and MVAC-like appliances) must have approved equipment testing organizations conduct either:

(1) Retests of certified recovery and/or recycling equipment in accordance with paragraphs (d) and (e) of this section; or

(2) Inspections of recovery and/or recycling equipment at manufacturing facilities to ensure that each equipment model line that has been certified under this section continues to meet the certification criteria.

(j) *Revocation*. An equipment model line that has been certified under this section may have its certification revoked if it is subsequently determined to fail to meet the certification criteria. In such cases, the Administrator must give notice to the manufacturer or importer setting forth the basis for the determination.

(k) Equipment that is advertised or marketed as ''recycling equipment'' must be capable of recycling the standard contaminated refrigerant sample of appendix B2, B3, or B4 of this subpart (as applicable) to the levels in the following table when tested under the conditions of appendix B2, B3 or B4 of this subpart:

MAXIMUM LEVELS OF CONTAMINANTS PERMISSIBLE IN REFRIGERANT PROCESSED THROUGH EQUIPMENT ADVERTISED AS "RECYCLING" EQUIPMENT

Contaminants	Low-pressure (R–11, R–123, R–113) systems	R–12 systems	All other systems
Acid Content (by wt.)	1.0 PPM	1.0 PPM	1.0 PPM.
Moisture (by wt.)	20 PPM	10 PPM	20 PPM.
Noncondensable Gas (by vol.)	N/A	2.0%	2.0%.
High Boiling Residues (by vol.)	1.0%	0.02%	0.02%.
Chlorides by Silver Nitrate Test.	No turbidity	No turbidity	No turbidity.
Particulates	Visually clean	Visually clean	Visually clean.

[81 FR 82360, Nov. 18, 2016]

§ 82.160 Approved equipment testing organizations.

(a) Any equipment testing organization may apply for approval by the Administrator to certify equipment under the standards in § 82.158 and appendices B2, B3, B4, or C of this subpart. Applications must be sent to *608reports@epa.gov*, or if containing confidential business information, mailed to: Section 608 Program Manager, Stratospheric Protection Division, Mail Code: 6205T, U.S. Environmental Protection Agency, 1200 Pennsylvania Avenue NW., Washington, DC 20460.

(b) Applications for approval must include:

(1) A list of equipment present at the organization that will be used for equipment testing.

(2) Verification of the organization's expertise in equipment testing and the technical experience of the organization's personnel.

(3) Verification of the organization's knowledge of the standards and recordkeeping and reporting requirements of this subpart.

(4) A description of the organization's program for verifying the performance of certified recovery and/or recycling equipment manufactured over the long term, specifying whether retests of equipment or inspections of equipment at manufacturing facilities will be used.

(5) Verification that the organization has no conflict of interest and receives no direct or indirect financial benefit from the outcome of certification testing.

(6) Agreement to allow the Administrator access to records and personnel to verify the information contained in the application.

(c) Organizations may not certify equipment before receiving approval from EPA. If approval is denied under this section, the Administrator must give written notice to the organization setting forth the basis for the determination.

(d) If an approved testing organization conducts certification tests in a way not consistent with the representations made in its application or with the provisions of this subpart, the Administrator may revoke approval in accordance with § 82.169. In such cases, the Administrator must give notice to the organization setting forth the basis for the determination.

(e) *Recordkeeping and reporting.* (1) Approved equipment testing organizations must maintain records of equipment testing and performance and a list of equipment that meets EPA requirements. This list must include the name of the manufacturer and the name and/or serial number of the model line. Approved equipment testing organizations must publish online a list of all certified equipment that includes the information specified above and update the list annually.

(2) Approved equipment testing organizations must notify EPA at *608reports@epa.gov* if retests of equipment or inspections of manufacturing facilities conducted under to § 82.158(i) show that a previously certified model line fails to meet EPA requirements. Such notification must be received within thirty days of the retest or inspection.

(3) All records must be maintained for three years after the equipment is no longer offered for sale. Online lists must contain certified equipment until three years after that equipment is no longer offered for sale.

[81 FR 82362, Nov. 18, 2016]

§ 82.161 Technician certification.

Until January 1, 2018, this section applies only to technicians and organizations certifying technicians that maintain, service, or repair appliances containing class I or class II refrigerants. Starting on January 1, 2018, this section applies to technicians and organizations certifying technicians that maintain, service, or repair appliances containing any class I or class II refrigerant or any non-exempt substitute refrigerant.

(a) *Certification Requirements.* (1) Any person who could be reasonably expected to violate the integrity of the refrigerant circuit during the maintenance, service, repair, or disposal of appliances (as follows in this paragraph) containing a class I or class II refrigerant or a non-exempt substitute refrigerant must pass a certification exam offered by an approved technician certification program.

(i) Persons who maintain, service, or repair small appliances must be certified as Type I technicians.

(ii) Persons who maintain, service, repair, or dispose of medium-, high-, or very high-pressure appliances (except small appliances, MVACs, and MVAC-like appliances) must be certified as Type II technicians.

(iii) Persons who maintain, service, repair, or dispose of low-pressure appliances must be certified as Type III technicians.

(iv) Persons who maintain, service, repair, or dispose of all appliances described in paragraph (a)(1)(i) through (iii) of this section must be certified as Universal technicians.

(v) Technicians who maintain, service, or repair MVAC-like appliances must either be certified as Type II technicians or be certified in accordance with 40 CFR part 82, subpart B.

(vi) Persons who maintain, service, or repair MVAC appliances for consideration must be certified in accordance with 40 CFR part 82, subpart B.

(vii) Persons who dispose of small appliances, MVACs, and MVAC-like appliances are not required to be certified.

(2) Apprentices are exempt from the requirement in paragraph (a)(1) of this section provided the apprentice is closely and continually supervised by a certified technician while performing any maintenance, service, repair, or disposal that could reasonably be expected to release refrigerant from an appliance into the environment, except those substitute refrigerants exempted under paragraph (a)(1) of this section. The supervising certified technician and the apprentice have the responsibility to ensure that the apprentice complies with this subpart.

(3) The Administrator may require technicians to demonstrate at their place of business their ability to perform proper procedures for recovering and/or recycling refrigerant, except those substitute refrigerants exempted under paragraph (a)(1) of this section. Failure to demonstrate or failure to properly use the equipment may result in revocation or suspension of the certificate. Failure to abide by any of the provisions of this subpart may also result in revocation or suspension of the certificate. If a technician's certificate is revoked, the technician would need to recertify before maintaining, servicing, repairing, or disposing of any appliances.

(4) (i) Technicians certified under this section must keep a copy of their certificate at their place of business.

(ii) Technicians must maintain a copy of their certificate until three years after no longer operating as a technician.

(5) *Recertification*. The Administrator reserves the right to specify a requirement for technician recertification at some future date, if necessary, by placing a notice in the FEDERAL REGISTER.

(b) *Requirements for Technician Certification Programs*. (1) No technician training or testing program may issue certificates under this section unless the program complies with all the standards of this section and appendix D, and has been granted approval by the Administrator.

(2) *Program Approval*. Persons may seek approval of any technician certification program (program), in accordance with this paragraph, by submitting to the Administrator at the address in § 82.160(a) verification that the program meets all the standards listed in appendix D of this subpart. The Administrator reserves the right to consider other relevant factors to ensure the effectiveness of certification programs. If approval is denied under this section, the Administrator must give written notice to the program setting forth the basis for the determination.

(3) *Alternative Examinations*. Programs are encouraged to make provisions for non-English speaking technicians by providing tests in other languages or allowing the use of a translator when taking the test. A test may be administered orally to any person who makes this request, in writing, to the program at least 30 days before the scheduled date for the examination. The written request must explain why the request is being made.

(4) *Proof of Certification*. Programs certifying technicians must provide technicians with identification cards in accordance with section (f) of appendix D of this subpart.

(5) Programs certifying technicians must maintain records in accordance with section (g) of appendix D of this subpart.

(6) Starting January 1, 2018, programs certifying technicians, excluding Federally-run programs, must publish online a list of all technicians they have certified on or after January 1, 2017. Certifying organizations must update these lists at least annually.

(i) The list must include the first name, middle initial, and last name of the certified technician, the technician's city of residence when taking the test, the type(s) of certification received, and the date each certification was received.

(ii) Programs certifying technicians must provide notice to technicians that such information will be published online in compliance with any other Federal, state or local regulations, and allow technicians to opt out of being included in such lists.

(7) If an approved program violates any of the above requirements, the Administrator may revoke approval in accordance with § 82.169. In such cases, the Administrator must give notice to the organization setting forth the basis for the determination.

(c) *Test Subject Material*. A bank of test questions developed by the Administrator consists of groups, including a core group and technical groups. The Administrator will release this bank of questions only to approved technician certification programs. Each test for each type of certification must include at least 25 questions drawn from the core group and at least 25 questions drawn from each relevant technical group. These questions must address the subject areas in appendix D of this subpart.

[81 FR 82363, Nov. 18, 2016]

§ 82.162 [Reserved]

§ 82.164 Reclaimer certification.

(a) All persons reclaiming used class I or II refrigerant or non-exempt substitute refrigerant for sale to a new owner must meet the following requirements:

(1) Reclaim such refrigerant to all the specifications in appendix A of this subpart (based on AHRI Standard 700–2016, *Specifications for Refrigerants*) that are applicable to that refrigerant;

(2) Verify that each batch of such refrigerant reclaimed meets these specifications using the analytical methodology prescribed in appendix A of this subpart, which includes the primary methodologies included in appendix A of AHRI Standard 700–2016;

(3) Release no more than 1.5 percent of the refrigerant during the reclamation process;

(4) Dispose of wastes from the reclamation process in accordance with all applicable laws and regulations; and

(5) Maintain records and submit reports in accordance with paragraph (d) of this section.

(b) The owner or a responsible officer reclaiming used refrigerant for sale to a new owner, except for persons who properly certified under this section before May 11, 2004, must certify to the Administrator at the address in § 82.160(a) that they will meet the requirements in paragraph (a) of this section. The certification must include the name and address of the reclaimer and a list of equipment used to reclaim the refrigerant to the required standard, and to analyze the refrigerant to ensure it meets these specifications.

(c) Certificates are not transferable. In the event of a change in ownership of an entity which reclaims refrigerant, the new owner of the entity must certify with the Administrator within 30 days of the change that they will meet the reclaimer certification requirements. In the event of a change in business management, location, or contact information, the owner of the entity must notify EPA within 30 days of the change at the address in § 82.160(a).

(d) *Recordkeeping and reporting.* (1) Reclaimers must maintain records, by batch, of the results of the analysis conducted to verify that reclaimed refrigerant meets the necessary specifications in paragraph (a)(2) of this section.

(2) Reclaimers must maintain records of the names and addresses of persons sending them material for reclamation and the quantity of the material (the combined mass of refrigerant and contaminants) by refrigerant type sent to them for reclamation. Such records must be maintained on a transactional basis for three years.

(3) Reclaimers must report to the Administrator annually by February 1 of the next calendar year the total annual quantity of material (the combined mass of refrigerant and contaminants) by refrigerant type sent to them for reclamation, the total annual mass of each refrigerant reclaimed, and the total annual mass of waste products.

(e) Failure to abide by any of the provisions of this subpart may result in revocation or suspension of the certification of the reclaimer in accordance with § 82.169. In such cases, the Administrator must give notice to the organization setting forth the basis for the determination.

[81 FR 82364, Nov. 18, 2016]

§ 82.166 Reporting and recordkeeping requirements for leak repair.

This section contains leak repair reporting and recordkeeping requirements that apply to owners and operators of appliances containing 50 or more pounds of class I or class II refrigerants until January 1, 2019. Starting January 1, 2019, the recordkeeping and reporting requirements in the leak repair provisions in § 82.157(l) and (m) apply to owners and operators of appliances containing 50 or more pounds of class I or class II refrigerants or non-exempt substitutes.

(a)–(i) [Reserved]

(j) Persons servicing appliances normally containing 50 or more pounds of refrigerant must provide the owner/operator of such appliances with an invoice or other documentation, which indicates the amount of refrigerant added to the appliance.

(k) Owners/operators of appliances normally containing 50 or more pounds of refrigerant must keep servicing records documenting the date and type

of service, as well as the quantity of refrigerant added. The owner/operator must keep records of refrigerant purchased and added to such appliances in cases where owners add their own refrigerant. Such records should indicate the date(s) when refrigerant is added.

(l) [Reserved]

(m) All records required to be maintained pursuant to this section must be kept for a minimum of three years unless otherwise indicated.

(n) The owners or operators of appliances must maintain on-site and report to EPA Headquarters at the address listed in § 82.160 the information specified in paragraphs (n)(1), (n)(2), and (n)(3) of this section, within the timelines specified under § 82.156 (i)(1), (i)(2), (i)(3) and (i)(5) where such reporting or recordkeeping is required. This information must be relevant to the affected appliance.

(1) An initial report to EPA under § 82.156(i)(1)(i), (i)(2), or (i)(5)(i) regarding why more than 30 days are needed to complete repairs must include: Identification of the facility; the leak rate; the method used to determine the leak rate and full charge; the date a leak rate above the applicable leak rate was discovered; the location of leak(s) to the extent determined to date; any repair work that has been completed thus far and the date that work was completed; the reasons why more than 30 days are needed to complete the work and an estimate of when the work will be completed. If changes from the original estimate of when work will be completed result in extending the completion date from the date submitted to EPA, the reasons for these changes must be documented and submitted to EPA within 30 days of discovering the need for such a change.

(2) If the owners or operators intend to establish that the appliance's leak rate does not exceed the applicable allowable leak rate in accordance with § 82.156(i)(3)(v), the owner or operator must submit a plan to fix other outstanding leaks for which repairs are planned but not yet completed to achieve a rate below the applicable allowable leak rate. A plan to fix other outstanding leaks in accordance with § 82.156(i)(3)(v) must include the following information: The identification of the facility; the leak rate; the method used to determine the leak rate and full charge; the date a leak rate above the applicable allowable leak rate was discovered; the location of leak(s) to the extent determined to date; and any repair work that has been completed thus far, including the date that work was completed. Upon completion of the repair efforts described in the plan, a second report must be submitted that includes the date the owner or operator submitted the initial report concerning the need for additional time beyond the 30 days and notification of the owner or operator's determination that the leak rate no longer exceeds the applicable allowable leak rate. This second report must be submitted within 30 days of determining that the leak rate no longer exceeds the applicable allowable leak rate.

(3) Owners or operators must maintain records of the dates, types, and results of all initial and follow-up verification tests performed under § 82.156(i)(3). Owners or operators must submit this information to EPA within 30 days after conducting each test only where required under § 82.156 (i)(1), (i)(2), (i)(3) and (i)(5). These reports must also include: Identification and physical address of the facility; the leak rate; the method used to determine the leak rate and full charge; the date a leak rate above the applicable allowable leak rate was discovered; the location of leak(s) to the extent determined to date; and any repair work that has been completed thus far and the date that work was completed. Submitted reports must be dated and include the name of the owner or operator of the appliance, and must be signed by an authorized company official.

(o) The owners or operators of appliances must maintain on-site and report to EPA at the address specified in § 82.160 the following information where such reporting and recordkeeping is required and in the timelines specified in § 82.156 (i)(7) and (i)(8), in accordance with § 82.156 (i)(7) and (i)(8). This information must be relevant to the affected appliance and must include:

(1) The identification of the industrial process facility;

(2) The leak rate;

(3) The method used to determine the leak rate and full charge;

(4) The date a leak rate above the applicable allowable rate was discovered.

(5) The location of leaks(s) to the extent determined to date;

(6) Any repair work that has been completed thus far and the date that work was completed;

(7) A plan to complete the retrofit or retirement of the system;

(8) The reasons why more than one year is necessary to retrofit or retire the system;

(9) The date of notification to EPA; and

(10) An estimate of when retrofit or retirement work will be completed. If the estimated date of completion changes from the original estimate and results in extending the date of completion, the owner or operator must submit to EPA the new estimated date of completion and documentation of the reason for the change within 30 days of discovering the need for the change, and must retain a dated copy of this submission.

(p)(1) Owners or operators who wish to exclude purged refrigerants that are destroyed from annual leak rate calculations must maintain records on-site to support the amount of refrigerant claimed as sent for destruction. Records shall be based on a monitoring strategy that provides reliable data to demonstrate that the amount of refrigerant claimed to have been destroyed is not greater than the amount of refrigerant actually purged and destroyed and that the 98 percent or greater destruction efficiency is met. Records shall include flow rate, quantity or concentration of the refrigerant in the vent stream, and periods of purge flow.

(2) Owners or operators who wish to exclude purged refrigerants that are destroyed from annual leak rate calculations must maintain on-site and make available to EPA upon request the following information after the first time the exclusion is utilized by the facility:

(i) The identification of the facility and a contact person, including the address and telephone number;

(ii) A general description of the refrigerant appliance, focusing on aspects of the appliance relevant to the purging of refrigerant and subsequent destruction;

(iii) A description of the methods used to determine the quantity of refrigerant sent for destruction and type of records that are being kept by the owners or operators where the appliance is located;

(iv) The frequency of monitoring and data-recording; and

(v) A description of the control device, and its destruction efficiency.

This information must also be included, where applicable, in any reporting requirements required for compliance with the leak repair and retrofit requirements for industrial process refrigeration equipment, as set forth in paragraphs (n) and (o) of this section.

(q) Owners or operators choosing to determine the full charge as defined in § 82.156(j) of an affected appliance by using an established range or using that methodology in combination with other methods for determining the full charge as defined in § 82.156(j) must maintain the following information:

(1) The identification of the owner or operator of the appliance;

(2) The location of the appliance;

(3) The original range for the full charge of the appliance, its midpoint, and how the range was determined;

(4) Any and all revisions of the full charge range and how they were determined; and

(5) The dates such revisions occurred.

[58 FR 28712, May 14, 1993, as amended at 59 FR 42957, Aug. 19, 1994; 60 FR 40443, Aug. 8, 1995; 69 FR 11981, Mar. 12, 2004; 70 FR 1992, Jan. 11, 2005; 79 FR 64290, Oct. 28, 2014; 81 FR 82364, Nov. 18, 2016]

§ 82.168 Incorporation by Reference.

(a) Certain material is incorporated by reference into this subpart part with the approval of the Director of the Federal Register under 5 U.S.C. 552(a) and 1 CFR part 51. You can obtain the material from the sources listed below. You may inspect a copy of the approved material at U.S. EPA's Air and Radiation Docket; EPA West Building, Room 3334, 1301 Constitution Ave. NW., Washington, DC, or at the National Archives and Records Administration (NARA). For information on the availability of this material at NARA, call (202) 741–6030 or go to *http://*

www.archives.gov/federal_register/code_of_federal_regulations/ibr_locations.html.

(b) Air-Conditioning, Heating, and Refrigeration Institute (AHRI), 2111 Wilson Boulevard, Suite 500, Arlington, VA 22201, *www.ahrinet.org*.

(1) AHRI Standard 110–2016, *2016 Standard for Air-Conditioning, Heating and Refrigerating Equipment Nameplate Voltages*, copyright 2016, into Appendix B3 to subpart F.

(2) 2008 Appendix C to AHRI Standard 700–2014, *2008 Appendix C for Analytical Procedures for AHRI Standard 700–2014—Normative*, copyright 2008, into Appendix A to subpart F.

(3) 2008 Appendix D to AHRI Standard 700–2014, *2012 Appendix D for Gas Chromatograms for AHRI Standard 700–2014—Informative*, copyright 2012, into Appendix A to subpart F.

(c) American Society of Heating, Refrigerating and Air-Conditioning Engineers, Inc., (ASHRAE), 1791 Tullie Circle NE., Atlanta, GA 30329, U.S.A.

(1) ANSI/ASHRAE Standard 63.2–1996 (RA 2010), *Method of Testing Liquid-Line Filter Drier Filtration Capability*, Reaffirmed June 26, 2010, into Appendix B3 to subpart F.

(d) ASTM International, 100 Barr Harbor Drive, P.O. Box C700, West Conshohocken, PA 19428–2959, *www.astm.org*.

(1) ASTM D1296–01 (Reapproved 2012), *Standard Test Method for Odor of Volatile Solvents and Diluents*, approved July 1, 2012, into Appendix A to subpart F.

(2) [Reserved]

(e) Gas Processors Association, 6526 East 60th Street, Tulsa, Oklahoma 74145.

(1) GPA Standard STD–2177–13, *Analysis of Natural Gas Liquid Mixtures Containing Nitrogen and Carbon Dioxide by Gas Chromatography*, Revised, copyright 2013, into Appendix A to subpart F.

(2) [Reserved]

(f) General Services Administration, 301 7th St. SW., Washington, DC 20410.

(1) BB–F–1421B, Federal Specification for ''Fluorocarbon Refrigerants,'' dated March 5, 1982, IBR approved for Appendix A to subpart F.

(2) [Reserved]

(g) International Electrotechnical Commission (IEC), 3, rue de Varembé, P.O. Box 131. CH–1211 Geneva 20—Switzerland, 41 22 919 02 11, *http://www.iec.ch*.

(1) IEC 60038, *IEC Standard Voltages*, Edition 7.0, 2009–06, into Appendix B3 to subpart F.

(2) [Reserved]

(h) Underwriters Laboratories (UL), 333 Pfingsten Road, Northbrook, IL 60062, 847–272–8800, *http://www.ul.com*.

(1) UL 1963, *Standard for Safety Requirements for Refrigerant Recovery/Recycling Equipment*, Fourth Edition (with revisions through October 13, 2013), June 1, 2011, in appendix B3 to subpart F, appendix B4 to subpart F.

(2) [Reserved]

[81 FR 82364, Nov. 18, 2016]

§ 82.169 Suspension and revocation procedures.

(a) Failure to abide by any of the provisions of this subpart may result in the revocation or suspension of the approval to certify technicians (under § 82.161), approval to act as a recovery/recycling equipment testing organization (under § 82.160), or reclaimer certification (under § 82.164), hereafter referred to as the ''organization.'' In such cases, the Administrator or her or his designated representative shall give notice of an impending suspension to the person or organization setting forth the facts or conduct that provide the basis for the revocation or suspension.

(b) Any organization that has received notice of an impending suspension or revocation may choose to request a hearing and must file that request in writing within 30 days of the date of the Agency's notice at the address listed in § 82.160 and shall set forth their objections to the revocation or suspension and data to support the objections.

(c) If the Agency does not receive a written request for a hearing within 30 days of the date of the Agency's notice, the revocation will become effective upon the date specified in the notice of an impending suspension.

(d) If after review of the request and supporting data, the Administrator or her or his designated representative finds that the request raises a substantial factual issue, she or he shall provide the organization with a hearing.

(e) After granting a request for a hearing the Administrator or her or his designated representative shall designate a Presiding Officer for the hearing.

(f) The hearing shall be held as soon as practicable at a time and place determined by the Administrator, the designated representative, or the Presiding Officer.

(g) The Administrator or her or his designated representative may, at his or her discretion, direct that all argument and presentation of evidence be concluded within a specified period established by the Administrator or her or his designated representative. Said period may be no less than 30 days from the date that the first written offer of a hearing is made to the applicant. To expedite proceedings, the Administrator or her or his designated representative may direct that the decision of the Presiding Officer (who need not be the Administrator) shall be the final EPA decision.

(h) Upon appointment pursuant to paragraph (e) of this section, the Presiding Officer will establish a hearing file. The file shall consist of the following:

(1) The notice issued by the Administrator under § 82.169(a);

(2) the request for a hearing and the supporting data submitted therewith;

(3) all documents relating to the request for certification and all documents submitted therewith; and

(4) correspondence and other data material to the hearing.

(i) The hearing file will be available for inspection by the petitioner at the office of the Presiding Officer.

(j) An applicant may appear in person or may be represented by counsel or by any other duly authorized representative.

(k) The Presiding Officer, upon the request of any party or at his or her discretion, may arrange for a pre-hearing conference at a time and place he or she specifies. Such pre-hearing conferences will consider the following:

(1) Simplification of the issues;

(2) Stipulations, admissions of fact, and the introduction of documents;

(3) Limitation of the number of expert witnesses;

(4) Possibility of agreement disposing of any or all of the issues in dispute; and

(5) Such other matters as may aid in the disposition of the hearing, including such additional tests as may be agreed upon by the parties.

(l) The results of the conference shall be reduced to writing by the Presiding Officer and made part of the record.

(m) Hearings shall be conducted by the Presiding Officer in an informal but orderly and expeditious manner. The parties may offer oral or written evidence, subject to the exclusion by the Presiding Officer of irrelevant, immaterial, and repetitious evidence.

(n) Witnesses will not be required to testify under oath. However, the Presiding Officer shall call to the attention of witnesses that their statements may be subject to the provisions of 18 U.S.C. 1001, which imposes penalties for knowingly making false statements or representations or using false documents in any matter within the jurisdiction of any department or agency of the United States.

(o) Any witness may be examined or cross-examined by the Presiding Officer, the parties, or their representatives.

(p) Hearings shall be reported verbatim. Copies of transcripts of proceedings may be purchased by the petitioner from the reporter.

(q) All written statements, charts, tabulations, and similar data offered in evidence at the hearings shall, upon a showing satisfactory to the Presiding Officer of their authenticity, relevancy, and materiality, be received in evidence and shall constitute a part of the record.

(r) Oral argument may be permitted at the discretion of the Presiding Officer and shall be reported as part of the record unless otherwise ordered by the Presiding Officer.

(s) The Presiding Officer shall make an initial decision that shall include written findings and conclusions and the reasons or basis regarding all the material issues of fact, law, or discretion presented on the record. The findings, conclusions, and written decision shall be provided to the parties and made a part of the record. The initial decision shall become the decision of

the Administrator without further proceedings, unless there is an appeal to the Administrator or motion for review by the Administrator within 20 days of the date the initial decision was filed.

(t) On appeal from or review of the initial decision, the Administrator or her or his designated representative shall have all the powers which he or she would have in making the initial decision, including the discretion to require or allow briefs, oral argument, the taking of additional evidence, or a remand to the Presiding Officer for additional proceedings. The decision by the Administrator or her or his designated representative shall include written findings and conclusions and the reasons or basis therefore on all the material issues of fact, law, or discretion presented on the appeal or considered in the review.

[68 FR 43809, July 24, 2003]

APPENDIX A TO SUBPART F OF PART 82—SPECIFICATIONS FOR REFRIGERANTS

This appendix is based on the Air-Conditioning, Heating, and Refrigeration Institute Standard 700–2016, *Specifications for Refrigerants*.

SECTION 1. PURPOSE

1.1 *Purpose*. The purpose of this standard is to evaluate and accept/reject refrigerants regardless of source (*i.e.*, new, reclaimed and/or repackaged) for use in new and existing refrigeration and air-conditioning products as required under 40 CFR part 82.

1.1.1 *Intent*. This standard is intended for the guidance of the industry including manufacturers, refrigerant reclaimers, repackagers, distributors, installers, servicemen, contractors and for consumers.

1.1.2 *Review and Amendment*. This standard is subject to review and amendment as the technology advances.

SECTION 2. SCOPE

2.1 *Scope*. This standard specifies acceptable levels of contaminants (purity requirements) for various fluorocarbon and other refrigerants regardless of source and lists acceptable test methods. These refrigerants are as referenced in the ANSI/ASHRAE Standard 34 with Addenda:

2.1.1 Single-Component Fluorocarbon Refrigerants: R–11, R–12, R–13, R–22, R–23, R–32, R–113, R–114, R–115, R–116, R–123, R–124, R–125, R–134a, R–141b, R–142b, R–143a, R–152a, R–218, R–227ea, R–236fa, R–245fa, R–1233zd(E), R–1234yf, R–1234ze(E);

2.1.2 Single Component Hydrocarbon Refrigerants: R–50, R–170, R–E170, R–290, R–600, R–600a, R–601, R–601a, R–610, R–1150, R–1270;

2.1.3 Carbon Dioxide Refrigerant: R–744;

2.1.4 Zeotropic Blend Refrigerants: R–401A, R–401B, R–402A, R–402B, R–403A, R–403B, R–404A, R–405A, R–406A, R–407A, R–407B, R–407C, R–407D, R–407E, R–407F, R–408A, R–409A, R–409B, R–410A, R–410B, R–411A, R–411B, R–412A, R–413A, R–414A, R–414B, R–415A, R–415B, R–416A, R–417A, R–417B, R–417C, R–418A, R–419A, R–419B, R–420A, R–421A, R–421B, R–422A, R–422B, R–422C, R–422D, R–422E, R–423A, R–424A, R–425A, R–426A, R–427A, R–428A, R–429A, R–430A, R–431A, R–434A, R–435A, R–437A, R–438A, R–439A, R–440A, R–442A, R–444A, R–444B, R–445A, R–446A, R–447A, R–448A, R–449A, R–450A;

2.1.5 Zeotropic Hydrocarbon Blend Refrigerants: R–432A, R–433A, R–433B, R–433C, R–436A, R–436B, R–441A, R–443A; and

2.1.6 Azeotropic Blend Refrigerants: R–500, R–502, R–503, R–507A, R–508A, R–508B, R–509A, R–510A, R–511A, and R–512A.

SECTION 3. DEFINITIONS

3.1 *Definitions*. All terms in this appendix will follow the definitions in §82.152 unless otherwise defined in this appendix.

3.2 *Shall*, *Should*, *Recommended*, or *It Is Recommended* shall be interpreted as follows:

3.2.1 *Shall*. Where ''shall'' or ''shall not'' is used for a provision specified, that provision is mandatory if compliance with this appendix is claimed.

3.2.2 *Should*, *Recommended*, or *It is Recommended* is used to indicate provisions which are not mandatory but which are desirable as good practice.

SECTION 4. CHARACTERIZATION OF REFRIGERANTS AND CONTAMINANTS

4.1 *Characterization*. Characterization of single component fluorocarbon (Table 1A) and zeotropic/azeotropic blend (Table 2A/3) refrigerants and contaminants are listed in the following general classifications:

4.1.1 Isomer content (see Table 1A)

4.1.2 Air and other non-condensables (see Tables 1A, 2A, 3)

4.1.3 Water (see Tables 1A, 2A, 3)

4.1.4 All other volatile impurities (see Tables 1A, 2A, 3)

4.1.5 High boiling residue (see Tables 1A, 2A, 3)

4.1.6 Halogenated unsaturated volatile impurities (see Table 1A)

4.1.7 Particulates/solids (see Tables 1A, 2A, 3)

4.1.8 Acidity (see Tables 1A, 2A, 3)

4.1.9 Chloride (see Tables 1A, 2A, 3)

4.2 Hydrocarbon Characterization. Characterization of hydrocarbon refrigerants (Tables 1B and 2B) and contaminants are listed in the following general classifications:

4.2.1 Nominal composition
4.2.2 Other allowable impurities
4.2.3 Air and other non-condensables
4.2.4 Sulfur odor
4.2.5 High boiling residue
4.2.6 Particulates/solids
4.2.7 Acidity
4.2.8 Water
4.2.9 All other volatile impurities
4.2.10 Total C3, C4, and C5 polyolefins

4.3 *Carbon Dioxide Characterization*. Characterization of carbon dioxide (Table 1C) and its contaminants are listed in the following general classifications:

4.3.1 Purity
4.3.2 Air and other non-condensables
4.3.3 Water
4.3.4 High boiling residue
4.3.5 Particulates/solids

SECTION 5. SAMPLING AND SUMMARY OF TEST PROCEDURES

5.1 *Referee Test*. The referee test methods for the various contaminants are summarized in the following paragraphs. Detailed test procedures are included in *2008 Appendix C to AHRI Standard 700–2014* (incorporated by reference, see §82.168). If alternative test methods are employed, the user must be able to demonstrate that they produce results at least equivalent to the specified referee test method.

5.2 *Refrigerant Sampling*

5.2.1 *Sampling Precautions*. Special precautions should be taken to ensure that representative samples are obtained for analysis. Sampling shall be done by qualified personnel following accepted sampling and safety procedures. Refrigerants with critical temperatures near or below ambient temperature cannot be reliably sampled for both liquid and vapor phase without special handling.

Note: Flammable refrigerants which are ASHRAE 34 class 2L, 2, or 3 present additional safety challenges and require additional measures for sampling safety procedures compared to nonflammable halocarbons documented in this standard.

5.2.2 *Cylinder Preparation*. Place a clean, empty sample cylinder with the valve open in an oven at 110 °C (230 °F) for one hour. Remove it from the oven while hot, immediately connect it to an evacuation system and evacuate to less than 56 kPa. Close the valve and allow it to cool. Weigh the empty cylinder.

5.2.3 *Vapor Phase Sampling*. A vapor phase sample shall be obtained for determining the non-condensables. The source temperature shall be measured and recorded at the time the sample is taken.

5.2.3.1 *Special Handling for Low Critical Temperature Refrigerant*. A vapor phase sample is required to determine non-condensables and volatile impurities, including other refrigerants. The vapor phase sample is obtained by regulating the sample container temperature to 5 K or more above the refrigerant critical temperature.

5.2.3.2 *Handling for Liquid Refrigerants with Boiling Points Near or Above Room Temperature*. Since R–11, R–113, R–123, R–141b, R–245fa, and R–1233zd(E) have normal boiling points near or above room temperature, non-condensable determination is not required for these refrigerants.

Note: Non-condensable gases, if present, will concentrate in the vapor phase of the refrigerant; care must be exercised to eliminate introduction of either air or liquid phase refrigerant during the sample transfer.

5.2.4 *Liquid Phase Sampling*. A liquid phase sample is required for all tests listed in this standard except the test for non-condensables.

5.2.4.1 *Liquid Sampling*. Accurate analysis requires that the sample cylinder, at ambient temperature, be filled to at least 60 percent by volume; however, under no circumstances should the cylinder be filled to more than 80 percent by volume. This can be accomplished by weighing the empty cylinder and then the cylinder with refrigerant. When the desired amount of refrigerant has been collected, close the valve(s) and immediately disconnect the sample cylinder.

Note: Care should be taken to ensure that all connections and transfer lines are dry and evacuated to avoid contaminating the sample.

Note: Low critical temperature refrigerants can have extremely high pressure and the sampling vessel, all connections, and transfer lines must be designed to handle high pressures.

5.2.4.2 *Special Handling for Low Critical Temperature Refrigerant*. A liquid phase sample is required for all testing except volatile impurities, including other refrigerants. The liquid phase sample is obtained by regulating the sample cylinder temperature to 2 °C below the critical temperature of the refrigerant.

Note: If free water is present in the sample, cooling to below 0 °C may result in the formation of ice. Clathrates may form at temperatures above 0 °C with some fluorocarbon refrigerants.

5.2.4.3 *Record Weight*. Check the sample cylinder for leaks and record the gross weight.

5.3 *Refrigerant Identification*. The required method shall be gas chromatography (GC) as described in *2008 Appendix C to AHRI Standard 700–2014* (incorporated by reference, see §82.168) with the corresponding gas chromatogram figures as illustrated in *2012 Appendix D to AHRI Standard 700–2014* (incorporated by reference, see §82.168). The chromatogram of the sample shall be compared to known standards.

5.3.2 *Alternative Method*. Determination of the boiling point and boiling point range is

an acceptable alternative test method which can be used to characterize refrigerants. The test method shall be that described in section 4.4.3 of BB–F–1421B (incorporated by reference, see § 82.168).

5.3.3 *Required Values*. The required values for boiling point and boiling point range are given in Table 1A, *Physical Properties of Single Component Refrigerants*; Table 1B, *Physical Properties of Zeotropic Blends (400 Series Refrigerants)*; and Table 1C, *Physical Properties of Azeotropic Blends (500 Series Refrigerants)*.

5.4 *Water Content*.

5.4.1 *Method*. The Coulometric Karl Fischer Titration shall be the primary test method for determining the water content of refrigerants. This method is described in *2008 Appendix C to AHRI Standard 700–2014* (incorporated by reference, see § 82.168). This method can be used for refrigerants that are either a liquid or a gas at room temperature. For all refrigerants, the sample for water analysis shall be taken from the liquid phase of the container to be tested.

5.4.2 *Limits*. The value for water content shall be expressed in parts per million (ppm) by weight and shall not exceed the maximum specified in Tables 1A, 1B, 1C, 2A, 2B, and 3.

5.5 *Conductivity*. (Alternative to chloride and acidity tests).

5.5.1 *Method*. A refrigerant may be tested for conductivity as an indication of the presence of acids, metal chlorides, and any compound that ionizes in water. This alternative procedure is intended for use with new or reclaimed refrigerants, however, significant amounts of oil can interfere with the test results.

5.5.2 *Limits*. The value for conductivity shall be converted to and expressed in ppm by weight calculated as HCl and shall be compared with the maximum acidity value specified (see in Tables 1A, 1B, 1C, 2A, 2B, and 3). If the conductivity is above this amount, then the chloride and acidity tests shall be conducted. If the conductivity is not greater than this amount, then the chloride and acidity tests may be omitted.

5.6 *Chloride*. The refrigerant shall be tested for chloride as an indication of the presence of hydrochloric acid and/or metal chlorides. The referee procedure is intended for use with new or reclaimed halogenated refrigerants; however, high boiling residue in excess of the amounts in Tables 1A, 1B, 1C, 2A, 2B, and 3 can interfere with the test results.

5.6.1 *Method*. The test method shall be that described in *2008 Appendix C to AHRI Standard 700–2014* (incorporated by reference, see § 82.168). The test will show noticeable turbidity at chloride levels of about 3 ppm or greater by weight.

5.5.2 *Limits*. The results of the test shall not exhibit any sign of turbidity. Report the results as ''pass'' or ''fail.''

5.7 *Acidity*.

5.7.1 *Method*. The acidity test uses the titration principle to detect any compound that is soluble in water and ionizes as an acid. The test method shall be that described in *2008 Appendix C to AHRI Standard 700–2014* (incorporated by reference, see § 82.168). This test may not be suitable for determination of high molecular weight organic acids; however these acids will be found in the high boiling residue test outlined in Section 5.8. The test requires a 50 to 60 gram sample and has a detection limit of 0.1 ppm by weight calculated as HCl.

5.7.2 *Limits*. The value for acidity shall be expressed in ppm by weight as HCl and shall not exceed the limits in Tables 1A, 1B, 2A, 2B, and 3.

5.8 *High Boiling Residue*.

5.8.1 *Method*. High boiling residue shall be determined by either volume or weight. The volume method measures the residue from a standard volume of refrigerant after evaporation. The gravimetric method is described in *2008 Appendix C to AHRI Standard 700–2014* (incorporated by reference, see § 82.168). Oils and/or organic acids will be captured by these methods.

5.8.2 *Limits*. The value for high boiling residue shall be expressed as a percentage by volume or weight and shall not exceed the maximum percent specified in Tables 1A, 1B, 1C, 2A, 2B, and 3.

5.9 *Particulates and Solids*.

5.9.1 *Method*. A measured amount of sample shall be placed in a Goetz bulb under controlled temperature conditions. The particulates/solids shall be determined by visual examination of the Goetz bulb prior to the evaporation of refrigerant. For details of this test method, refer to Part 3 of *2008 Appendix C to AHRI Standard 700–2014* (incorporated by reference, see § 82.168).

Note: R–744 will partially sublimate when measuring a known amount of liquid sample into the dry Goetz bulb and the solid R–744 will interfere with the visual examination of particulates/solids. Determining the particulates/solids shall be completed by visual examination of the Goetz bulb after the evaporation of the refrigerant.

5.9.2 *Limits*. Visual presence of dirt, rust, or other particulate contamination is reported as ''fail.''

5.10 *Non-Condensables*.

5.10.1 *Method*. A vapor phase sample shall be used for determination of non-condensables. Non-condensable gases consist primarily of air accumulated in the vapor phase of refrigerants where the solubility of air in the refrigerant liquid phase is extremely low and air is not significant as a liquid phase contaminant. The presence of non-condensable gases may reflect poor quality control in transferring refrigerants to storage tanks and cylinders.

The test method shall be gas chromatography with a thermal conductivity detector as described in *2008 Appendix C to AHRI Standard 700–2014* (incorporated by reference, see § 82.168).

5.10.2 *Limits*. The maximum level of noncondensables in the vapor phase of a test sample shall not exceed the maximum at 25 °C as shown in Tables 1A, 1B, 1C, 2A, 2B, and 3.

5.11 *All Other Volatile Impurities and/or Other Refrigerants*.

5.11.1 *Method*. The amount of volatile impurities including other refrigerants in the subject refrigerant shall be determined by gas chromatography as described in *2008 Appendix C to AHRI Standard 700–2014* (incorporated by reference, see § 82.168).

5.11.2 *Limits*. The test sample shall not contain more than 0.5 percent by weight of volatile impurities including other refrigerants as shown in Tables 1A, 1B, 1C, 2A, 2B and 3.

5.12 *Total C_3, C_4 and C_5 Polyolefins in Hydrocarbon Refrigerants*.

5.12.1 *Method*. The amount of polyolefin impurities in the hydrocarbon shall be determined by gas chromatography as described in GPA Standard 2177–13 (incorporated by reference, see § 82.168).

5.12.2 *Limits*. The test sample shall not contain more than 0.05 percent by weight in the hydrocarbon sample as shown in Tables 1B and 2B. Report the results as ''pass'' or ''fail.''

5.13 *Sulfur Odor in Hydrocarbon Refrigerants*.

5.13.1 *Method*. The amount of sulfur containing compounds or other compounds with an odor shall be determined by ASTM D1296–01 (Reapproved 2012) (incorporated by reference, see § 82.168).

5.13.2 *Limits*. The test sample paper shall not emit a residual sulfur odor as shown in Tables 1B and 2B.

SECTION 6. REPORTING PROCEDURE

6.1 *Reporting Procedure*. The source (manufacturer, reclaimer, or repackager) of the packaged refrigerant shall be identified. The refrigerant shall be identified by its accepted refrigerant number and/or its chemical name. Maximum allowable levels of contaminants are shown in Tables 1A, 1B, 1C, 2A, 2B, and 3. Test results shall be tabulated in a similar manner.

Table 1A. Single Component Fluorocarbon Refrigerants and their Allowable Levels of Contaminants

	Reporting Units	Reference Section	**R-11**	**R-12**	**R-13**	**R-22**	**R-23**	**R-32**	**R-113**	**R-114**
CHARACTERISTICS:										
Boiling Point[1]	°C @ 101.3 kPa°	N/A	23.7	-29.8	-81.5	-40.8	-82	-51.7	47.6	3.6
Boiling Point Range[1]	K	N/A	± 0.3	± 0.3	± 0.5	± 0.3	± 0.5	± 0.3	± 0.3	± 0.3
Critical Temperature[1]	°C	N/A	198	112	28.9	96.2	26.1	78.1	214.1	145.7
Isomer Content	% by weight	N/A	N/A	N/A	N/A	N/A	N/A	N/A	0-1 R-133a	0-30 R-144a
VAPOR PHASE CONTAMINANTS:										
Air and Other Non-condensables, Maximum	% by volume @ 25.0 °C	5.10	N/A[2]	1.5	1.5	1.5	1.5	1.5	N/A[2]	1.5
LIQUID PHASE CONTAMINANTS:										
Water, Maximum	ppm by weight	5.4	20	10	10	10	10	10	20	10
All Other Volatile Impurities, Maximum	% by weight	5.11	0.5	0.5	0.5	0.5	0.5	0.5	0.5	0.5
High Boiling Residue, Maximum	% by volume or % by weight	5.8	0.01	0.01	0.01	0.01	0.01	0.01	0.01	0.01
Particulates/Solids	Pass or Fail	5.9	Visually clean	Visually clean	Visually clean	Visually clean	Visually clean	Visually clean	Visually clean	Visually clean
Acidity, Maximum	ppm by weight (as HCl)	5.7	1	1	1	1	1	1	1	1
Chloride[3]	Pass or Fail	5.6	No visible turbidity	No visible turbidity	No visible turbidity	No visible turbidity	No visible turbidity	No visible turbidity	No visible turbidity	No visible turbidity

Table 1A. Single Component Fluorocarbon Refrigerants and their Allowable Levels of Contaminants (continued)

	Reporting Units	Reference Section	**R-115**	**R-116**	**R-123**	**R-124**	**R-125**	**R-134a**	**R-141b**
CHARACTERISTICS:									
Boiling Point[1]	°C @ 101.3 kPa	N/A	-38.9	-78.2	27.8	-12	-48.1	-26.1	32
Boiling Point Range[1]	K	N/A	± 0.3	± 0.3	± 0.3	± 0.3	± 0.3	± 0.3	± 0.3
Critical Temperature[1]	°C	N/A	80	19.9	183.7	122.3	66	101.1	206.8
Isomer Content	% by weight	N/A	N/A	N/A	0-8 R-123a+ R-123b	0-5 R-124a	N/A	0-0.5 R-134	0-0.1ea R-141, R-141a
VAPOR PHASE CONTAMINANTS:									
Air and Other Non-condensables, Max.	% by volume @ 25.0 °C	5.10	1.5	1.5	N/A[2]	1.5	1.5	1.5	N/A[2]
LIQUID PHASE CONTAMINANTS:									
Water, Max.	ppm by weight	5.4	10	10	20	10	10	10	100
All Other Volatile Impurities, Max.	% by weight	5.11	0.5	0.5	0.5	0.5	0.5	0.5	0.9
High Boiling Residue, Max.	% by volume or % by weight	5.8	0.01	0.01	0.01	0.01	0.01	0.01	0.01
Particulates/Solids	Pass or Fail	5.9	Visually clean	Visually clean	Visually clean	Visually clean	Visually clean	Visually clean	Visually clean
Acidity, Max.	ppm by weight (as HCl)	5.7	1	1	1	1	1	1	1
Chloride[3]	Pass or Fail	5.6	No visible turbidity	No visible turbidity	No visible turbidity	No visible turbidity	No visible turbidity	No visible turbidity	No visible turbidity

Table 1A. Single Component Fluorocarbon Refrigerants and their Allowable Levels of Contaminants (continued)

	Reporting Units	Reference Section	**R-142b**	**R-143a**	**R-152a**	**R-218**	**R-227ea**	**R-236fa**	**R-245fa**	**R-1233zd(E)**	**R-1234yf**	**R-1234ze(E)**	**R-1336mzz(Z)**
CHARACTERISTICS:													
Boiling Point[1]	°C @ 101.3 kPa	N/A	-9.2	-47.2	-24	-36.8	-16.5	-1.4	14.9	18.3	-29.4	-19	33.4
Boiling Point Range[1]	K	N/A	--	± 0.3	± 0.3	± 0.3	--	± 0.3	± 0.3	--	N/A	N/A	N/A
Critical Temperature[1]	°C	N/A	137.1	72.7	113.3	72	101.7	124.9	154.1	165.6	94.8	109.4	171.3
Isomer Content	% by weight	N/A	0-0.1ea R-142, R-142a	0-0.01 R-143	N/A	--	--	--	0-0.1ea R-245ca, R-245cb, R-245ea, R-245eb	--	N/A	0.3 R-1234ze(Z)	0 - 0.1 R-1336mzz(E)
VAPOR PHASE CONTAMINANTS:													
Air and Other Non-condensables, Max.	% by volume @ 25.0 °C	5.10	2	1.5	1.5	1.5	1.5	1.5	N/A[2]	N/A[2]	1.5	1.5	N/A[2]
LIQUID PHASE CONTAMINANTS:													
Water, Maximum	ppm by weight	5.4	15	10	10	10	10	10	20	20	10	10	20
All Other Volatile Impurities, Max.	% by weight	5.11	0.5	0.5	0.5	0.5	0.5	0.5	0.5	0.5	0.5	0.5	0.5
High Boiling Residue, Max.	% by volume or % by weight	5.8	0.01	0.01	0.01	0.01	0.01	0.01	0.01	0.01	0.01	0.01	0.01
Particulates/Solids	Pass or Fail	5.9	Visually clean	Visually clean	Visually clean	Visually clean	Visually clean	Visually clean	Visually clean	Visually clean	Visually clean	Visually clean	Visually clean
Acidity, Max.	ppm by weight (as HCl)	5.7	3	1	1	1	1	1	1	1	1	1	1
Chloride[3]	Pass or Fail	5.6	No visible turbidity	No visible turbidity	No visible turbidity	No visible turbidity	No visible turbidity	No visible turbidity	No visible turbidity	No visible turbidity	No visible turbidity	No visible turbidity	No visible turbidity

1. Boiling points, boiling point ranges, and critical temperatures, although not required, are provided for informational purposes. Refrigerant data compiled from Refprop 9.1.
2. Since R-11, R-113, R-123, R-141b, R-245fa, R-1233zd(E), and R-1336mzz(Z) have normal boiling points near or above room temperature, non-condensable determinations are not required for these refrigerants.
3. Recognized chloride level for pass/fail is about 3 ppm.
-- Data Not Available

Table 1B. Single Component Hydrocarbon Refrigerants and their Allowable Levels of Contaminants

	Reporting Units	R-50	R-170	R-E170	R-290	R-600	R-600a	R-601	R-601a	R-610	R-1150	R-1270
CHARACTERISTICS:												
Boiling Point[1]	°C at 101.3 kPa	-161.5	-88.6	-24.8	-42.1	-0.5	-11.8	36.1	27.8	34.6	-103.8	-47.6
Boiling Point Range[1]	K	± 0.5	± 0.5	± 0.5	± 0.5	± 0.5	± 0.5	± 0.5	± 0.5	± 0.5	± 0.5	± 0.5
Minimum Nominal Composition	% weight	99.5	99.5	99.5	99.5	99.5	99.5	99.5	99.5	99.5	99.5	99.5
Other Allowable Impurities	% weight	N/A	N/A	N/A	2 (see footnote[2])	2 (see footnote[2])	2 (see footnote[2])	0-1 R-601a	0-1 R-601	N/A	N/A	0-1 R-290
VAPOR PHASE CONTAMINANTS[3]:												
Air and Other Non-condensables, Maximum	% by volume @ 25.0 °C	1.5	1.5	1.5	1.5	1.5	1.5	1.5	1.5	1.5	1.5	1.5
LIQUID PHASE CONTAMINANTS[4]:												
Sulfur Odor	Pass or Fail	No sulfur odor	No sulfur odor	No sulfur odor	No sulfur odor	No sulfur odor	No sulfur odor	No sulfur odor	No sulfur odor	No sulfur odor	No sulfur odor	No sulfur odor
High Boiling Residue, Max.	% weight	0.01	0.01	0.01	0.01	0.01	0.01	0.01	0.01	0.01	0.01	0.01
Particulates/Solids	Pass or Fail	Visually clean	Visually clean	Visually clean	Visually clean	Visually clean	Visually clean	Visually clean	Visually clean	Visually clean	Visually clean	Visually clean
Acidity, Max.	ppm by weight (as HCl)	1	1	1	1	1	1	1	1	1	1	1
Water, Max.	mg kg^{-1}	10	10	10	10	10	10	10	10	10	10	10
All Other Volatile Impurities, Max.	% weight	0.5	0.5	0.5	0.5	0.5	0.5	0.5	0.5	0.5	0.5	0.5
Total C3, C4 and C5 Polyolefins, Max.	% weight	0.05	0.05	0.05	0.05	0.05	0.05	0.05	0.05	0.05	0.05	0.05

1. Boiling points, boiling point ranges, although not required, are provided for informational purposes.
2. 2% of other C3 and C4 saturated hydrocarbons are allowed
3.Taken from vapor phase
4. Vaporized from liquid phase

Table 2A. Zeotropic Blends (400 Series Refrigerants) and their Allowable Levels of Contaminants

	Reporting Units	Reference Section	**R-401A**	**R-401B**	**R-402A**	**R-402B**	**R-403A**	**R-403B**	**R-404A**	**R-405**
CHARACTERISTICS:										
Refrigerant Components	N/A	N/A	R-22/ 152a/124	R-22/ 152a/124	R-125/ 290/22	R-125/ 290/22	R-290/ 22/218	R-290/ 22/218	R-125/ 143a/134a	R-22/152a/ 142b/C318
Nominal Composition	% by weight	N/A	53.0/13.0/ 34.0	61.0/11.0/ 28.0	60.0/2.0/ 38.0	38.0/2.0/60.0	5.0/75.0/ 20.0	5.0/56.0/ 39.0	44.0/52.0/ 4.0	45.0/7.0/5.5/42.5
Allowable Composition	% by weight	N/A	51.0-55.0/ 11.5-13.5/ 33.0-35.0	59.0-63.0/ 9.5-11.5/ 27.0-29.0	58.0-62.0/ 1.0-2.1/ 36.0-40.0	36.0-40.0/ 1.0-2.1/ 58.0-62.0	3.0-5.2/ 73.0-77.0/ 18.0-22.0	3.0-5.2/ 54.0-58.0/ 37.0-41.0	42.0-46.0/ 51.0-53.0/ 2.0-6.0	43.0-47.0/ 6.0-8.0/ 4.5-6.5/ 40.5-44.5
Bubble Point[1]	°C @ 101.3 kPa	N/A	-33.3	-34.9	-49	-47	-47.8	-49.2	-46.2	-32.9
Dew Point[1]	°C @ 101.3 kPa	N/A	-26.4	-28.8	-46.9	-44.7	-44.3	-46.8	-45.5	-24.5
Critical Temperature[1]	°C	N/A	105.3	103.5	76	83	87	79.7	72.1	106
VAPOR PHASE CONTAMINANTS:										
Air and Other Non-condensables, Max.	% by volume @ 25.0 °C	5.10	1.5	1.5	1.5	1.5	1.5	1.5	1.5	1.5
LIQUID PHASE CONTAMINANTS:										
Water, Max.	ppm by weight	5.4	10	10	10	10	10	10	10	10
All Other Volatile Impurities, Max.	% by weight	5.11	0.5	0.5	0.5	0.5	0.5	0.5	0.5	0.5
High Boiling Residue, Max.	% by volume or % by weight	5.8	0.01	0.01	0.01	0.01	0.01	0.01	0.01	0.01
Particulates/Solids	Pass or Fail	5.9	Visually clean	Visually clean	Visually clean	Visually clean	Visually clean	Visually clean	Visually clean	Visually clean
Acidity, Max.	ppm by weight (as HC1)	5.7	1	1	1	1	1	1	1	1
Chloride[2]	Pass or Fail	5.6	No visible turbidity	No visible turbidity	No visible turbidity	No visible turbidity	No visible turbidity	No visible turbidity	No visible turbidity	No visible turbidity

Table 2A. Zeotropic Blends (400 Series Refrigerants) and their Allowable Levels of Contaminants (continued)

	Reporting Units	Reference Section	**R-406A**	**R-407A**	**R-407B**	**R-407C**	**R-407D**	**R-407E**	**R-407F**	**R-407G**	**R-408A**
CHARACTERISTICS:											
Refrigerant Components	N/A	N/A	R-22/600a/ 142b	R-32/ 125/134a	R-32/ 125/134a	R-32/ 125/134a	R-32/ 125/134a	R-32/ 125/134a	R-32/ 125/134a	R-32/ 125/134a	R-125/ 143a/22
Nominal Composition	% by weight	N/A	55.0/4.0/41 .0	20.0/40.0/ 40.0	10.0/70.0/ 20.0	23.0/25.0/ 52.0	15.0/15.0/ 70.0	25.0/15.0/ 60.0	30.0/30.0/ 40.0	2.5/2.5/95.0	7.0/46.0/47. 0
Allowable Composition	% by weight	N/A	53.0-57.0/ 3.0-5.0/ 40.0-42.0	18.0-22.0/ 38.0-42.0/ 38.0-42.0	8.0-12.0/ 68.0-72.0/ 18.0-22.0	21.0-25.0/ 23.0-27.0/ 50.0-54.0	13.0-17.0/ 13.0-17.0/ 68.0-72.0	23.0-27.0/ 13.0-17.0/ 58.0-62.0	28.0-32.0/ 28.0-32.0/ 38.0-42.0	2.0-3.0/ 2.0-3.0/ 94.0-96.0	5.0-9.0/ 45.0-47.0/ 45.0-49.0
Bubble Point[1]	°C @ 101.3 kPa	N/A	-32.7	-45.3	-46.8	-43.6	-39.5	-42.9	-46.1	-29.2	-44.6
Dew Point[1]	°C @ 101.3 kPa	N/A	-23.5	-38.9	-42.5	-36.6	-32.9	-35.8	-39.7	-27.2	-44.1
Critical Temperature[1]	°C	N/A	116.5	82.3	75	86	91.4	88.5	83	99.5	83.1
VAPOR PHASE CONTAMINANTS:											
Air and Other Non-condensables, Max.	% by volume @ 25.0 °C	5.10	1.5	1.5	1.5	1.5	1.5	1.5	1.5	1.5	1.5
LIQUID PHASE CONTAMINANTS:											
Water, Max.	ppm by weight	5.4	10	10	10	10	10	10	10	10	10
All Other Volatile Impurities, Max.	% by weight	5.11	0.5	0.5	0.5	0.5	0.5	0.5	0.5	0.5	0.5
High Boiling Residue, Max.	% by volume or % by weight	5.8	0.01	0.01	0.01	0.01	0.01	0.01	0.01	0.01	0.01
Particulates/Solids	Pass or Fail	5.9	Visually clean	Visually clean	Visually clean	Visually clean	Visually clean	Visually clean	Visually clean	Visually clean	Visually clean
Acidity, Max.	ppm by weight	5.7	1	1	1	1	1	1	1	1	1
Chloride[2]	Pass or Fail	5.6	No visible turbidity	No visible turbidity	No visible turbidity	No visible turbidity	No visible turbidity	No visible turbidity	No visible turbidity	No visible turbidity	No visible turbidity

Table 2A. Zeotropic Blends (400 Series Refrigerants) and their Allowable Levels of Contaminants (continued)

	Reporting Units	Reference Section	**R-409A**	**R-409B**	**R-410A**	**R-410B**	**R-411A**	**R-411B**	**R-412A**	**R-413A**
CHARACTERISTICS:										
Refrigerant Components	N/A	N/A	R-22/ 124/142b	R-22/ 124/142b	R-32/125	R-32/125	R-1270/ 22/152a	R-1270/ 22/152a	R-22/218/ 142b	R-218/ 134a/600a
Nominal Composition	% by weight	N/A	60.0/25.0/ 15.0	65.0/25.0/ 10.0	50.0/50.0	45.0/55.0	1.5/87.5 /11.0	3.0/94.0/ 3.0	70.0/5.0/ 25.0	9.0/88.0/3.0
Allowable Composition	% by weight	N/A	58.0-62.0/ 23.0-27.0/ 14.0-16.0	63.0-67.0/ 23.0-27.0/ 9.0-11.0	48.5-50.5/ 49.5-51.5	44.0-46.0/ 54.0-56.0	0.5-1.5/ 87.5-89.5/ 10.0-11.0	2.0-3.0/ 94.0-96.0/ 2.0-3.0	68.0-72.0/ 3.0-7.0/ 24.0-26.0	8.0-10.0/ 86.0-90.0/ 2.0-3.0
Bubble Point[1]	°C @ 101.3 kPa	N/A	-34.7	-35.6	-51.4	-51.3	-39.5	-41.6	-38	-30.6
Dew Point[1]	°C @ 101.3 kPa	N/A	-26.4	-27.9	-51.4	-51.6	-36.6	-40	-28.7	-27.9
Critical Temperature[1]	°C	N/A	106.9	106.9	71.4	70.8	99.1	96	107.2	98.5
VAPOR PHASE CONTAMINANTS:										
Air and Other Non-condensables, Max.	% by volume @ 25.0 °C	5.10	1.5	1.5	1.5	1.5	1.5	1.5	1.5	1.5
LIQUID PHASE CONTAMINANTS:										
Water, Maximum	ppm by weight	5.4	10	10	10	10	10	10	10	10
All Other Volatile Impurities, Max.	% by weight	5.11	0.5	0.5	0.5	0.5	0.5	0.5	0.5	0.5
High Boiling Residue, Max.	% by volume or % by weight	5.8	0.01	0.01	0.01	0.01	0.01	0.01	0.01	0.01
Particulates/Solids	Pass or Fail	5.9	Visually clean	Visually clean	Visually clean	Visually clean	Visually clean	Visually clean	Visually clean	Visually clean
Acidity, Max.	ppm by weight (as HCl)	5.7	1	1	1	1	1	1	1	1
Chloride[2]	Pass or Fail	5.6	No visible turbidity	No visible turbidity	No visible turbidity	No visible turbidity	No visible turbidity	No visible turbidity	No visible turbidity	No visible turbidity

Table 2A. Zeotropic Blends (400 Series Refrigerants) and their Allowable Levels of Contaminants (continued)

	Reporting Units	Reference Section	**R-414A**	**R-414B**	**R-415A**	**R-415B**	**R-416A**	**R-417A**	**R-417B**
CHARACTERISTICS:									
Refrigerant Components	N/A	N/A	R-22/124/ 600a/142b	R-22/124/ 600a/142b	R-22/152a	R-22/152a	R-134a/ 124/600	R-125/ 134a/600	R-125/ 134a/600
Nominal Composition	% by weight	N/A	51.0/28.5/ 4.0/16.5	50.0/39.0/ 1.5/9.5	82.0/18.0	25.0/75.0	59.0/39.5/1.5	46.6/50.0/3.4	79.0/18.3/2.7
Allowable Composition	% by weight	N/A	49.0-53.0/ 26.5-30.5/ 3.5-4.5/ 15.5-17.0	48.0-52.0/ 37.0-41.0/ 1.0-2.0/ 8.5-10.0	81.0-83.0/ 17.0-19.0	24.0-26.0/ 74.0-76.0	58.0-59.5/ 39.0-40.5/ 1.3-1.6	45.5-47.7/ 49.0-51.0/ 3.0-3.5	78.0-80.0/ 17.3-19.3/ 2.2-2.8
Bubble Point[1]	°C @ 101.3 kPa	N/A	-34	-32.9	-37.5	-27.7	-23.4	-38	-44
Dew Point[1]	°C @ 101.3 kPa	N/A	-25.8	-24.3	-34.7	-26.2	-21.8	-32.9	-41.5
Critical Temperature[1]	°C	N/A	110.7	111	100	111.3	108.2	89.9	75.2
VAPOR PHASE CONTAMINANTS:									
Air and Other Non-condensables, Max.	% by volume @ 25.0 °C	5.10	1.5	1.5	1.5	1.5	1.5	1.5	1.5
LIQUID PHASE CONTAMINANTS:									
Water, Max.	ppm by weight	5.4	10	10	10	10	10	10	10
All Other Volatile Impurities, Max.	% by weight	5.11	0.5	0.5	0.5	0.5	0.5	0.5	0.5
High Boiling Residue, Max.	% by volume or % by weight	5.8	0.01	0.01	0.01	0.01	0.01	0.01	0.01
Particulates/Solids	Pass or Fail	5.9	Visually clean	Visually clean	Visually clean	Visually clean	Visually clean	Visually clean	Visually clean
Acidity, Max.	ppm by weight (as HC1)	5.7	1	1	1	1	1	1	1
Chloride[2]	Pass or Fail	5.6	No visible turbidity	No visible turbidity	No visible turbidity	No visible turbidity	No visible turbidity	No visible turbidity	No visible turbidity

Table 2A. Zeotropic Blends (400 Series Refrigerants) and their Allowable Levels of Contaminants (continued)

	Reporting Units	Reference Section	**R-417C**	**R-418A**	**R-419A**	**R-419B**	**R-420A**	**R-421A**	**R-421B**	**R-422A**	**R-422B**
CHARACTERISTICS:											
Refrigerant Components	N/A	N/A	R-125/ 134a/600	R-290/ 22/152a	R-125/ 134a/ E170	R-125/ 134a/E17 0	R-134a/ 142b	R-125/ 134a	R-125/ 134a	R-125/ 134a/600a	R-125/ 134a/600a
Nominal Composition	% by weight	N/A	19.5/78.8/ 1.7	1.5/96.0/ 2.5	77.0/19.0/ 4.0	48.5/48.0/ 3.5	88.0/12.0	58.0/42.0	85.0/15.0	85.1/11.5/ 3.4	55.0/42.0/ 3.0
Allowable Composition	% by weight	N/A	18.5-20.5/ 77.8-79.8/ 1.2-1.8	1.0-2.0/ 95.0-97.0/ 2.0-3.0	76.0-78.0/ 18.0-20.0/ 3.0-5.0	47.5-49.5/ 47.0-49.0/ 3.0-4.0	88.0-89.0/ 11.0-12.0	57.0-59.0/ 41.0-43.0	84.0-86.0/ 14.0-16.0	84.1-86.1/ 10.5-12.5/ 3.0-3.5	54.0-56.0/ 41.0-43.0/ 2.5-3.1
Bubble Point[1]	°C @ 101.3 kPa	N/A	-32.7	-41.2	-42.6	-37.4	-25	-40.8	-45.7	-46.5	-40.5
Dew Point[1]	°C @ 101.3 kPa	N/A	-29.2	-40.1	-36	-31.5	-24.2	-35.5	-42.6	-44.1	-35.6
Critical Temperature[1]	°C	N/A	95.4	96.7	79.1	90.4	105.4	78.5	69	71.7	85.7
VAPOR PHASE CONTAMINANTS:											
Air and Other Non-condensables, Max.	% by volume @ 25.0 °C	5.10	1.5	1.5	1.5	1.5	1.5	1.5	1.5	1.5	1.5
LIQUID PHASE CONTAMINANTS:											
Water, Max.	ppm by weight	5.4	10	10	10	10	20	10	10	10	10
All Other Volatile Impurities, Max.	% by weight	5.11	0.5	0.5	0.5	0.5	0.5	0.5	0.5	0.5	0.5
High Boiling Residue, Max.	% by volume or % by weight	5.8	0.01	0.01	0.01	0.01	0.01	0.01	0.01	0.01	0.01
Particulates/Solids	Pass or Fail	5.9	Visually clean	Visually clean	Visually Clean	Visually clean	Visually clean	Visually Clean	Visually clean	Visually clean	Visually clean
Acidity, Max.	ppm by weight (as HC1)	5.7	1	1	1	1	1	1	1	1	1
Chloride[2]	Pass or Fail	5.6	No visible turbidity	No visible turbidity	No visible turbidity	No visible turbidity	No visible turbidity	No visible turbidity	No visible turbidity	No visible turbidity	No visible turbidity

Table 2A. Zeotropic Blends (400 Series Refrigerants) and their Allowable Levels of Contaminants (continued)

	Reporting Units	Reference Section	**R-422C**	**R-422D**	**R-422E**	**R-423A**	**R-424A**	**R-425A**	**R-426A**	**R-427A**	**R-428A**
CHARACTERISTICS:											
Refrigerant Components	N/A	N/A	R-125/ 134a/600a	R-125/ 134a/600a	R-125/ 134a/600a	R-134a/ 227ea	R-125/ 134a/600a/ 600/601a	R-32/134a/ 227ea	R-125/134a/ 600/601a	R-32/125/ 143a/134a	R-125/143a/ 290/600a
Nominal Composition	% by weight	N/A	82.0/15.0/ 3.0	65.1/30.5/ 3.4	58.0/39.3/ 2.7	52.5/47.5	50.5/47.0/ 0.9/1.0/0.6	18.5/69.5/ 12.0	5.1/93.0/ 1.3/0.6	15.0/25.0/ 10.0/50.0	77.5/20.0/ 0.6/1.9
Allowable Composition	% by weight	N/A	81.0-83.0/ 14.0-16.0/ 2.5-3.1	64.0-66.0/ 30.5-32.5/ 3.0-3.5	57.0-59.0/ 38.0-41.0/ 2.5-3.0	51.5-53.5/ 46.5-48.5	49.5-51.5/ 46.0-48.0/ 0.7-1.0/ 0.8-1.1/ 0.4-0.7	18.0-19.0/ 69.0-70.0/ 11.5-12.5	4.1-6.1/ 92.0-94.0/ 1.1-1.4/ 0.4-0.7	13.0-17.0/ 23.0-27.0/ 8.0-12.0/ 48.0-52.0	76.5-78.5/ 19.0-21.0/ 0.4-0.7/ 1.7-2.0
Bubble Point[1]	°C @ 101.3 kPa	N/A	-45.3	-43.2	-41.8	-24.2	-39.1	-38.1	-28.5	-43	-48.3
Dew Point[1]	°C @ 101.3 kPa	N/A	-42.3	-38.4	-36.4	-23.5	-33.3	-31.3	-26.7	-36.3	-47.5
Critical Temperature[1]	°C	N/A	76.1	79.6	82.2	99	87.5	93.9	100.2	85.3	69
VAPOR PHASE CONTAMINANTS:											
Air and Other Non-condensables, Max.	% by volume @ 25.0 °C	5.10	1.5	1.5	1.5	1.5	1.5	1.5	1.5	1.5	1.5
LIQUID PHASE CONTAMINANTS:											
Water, Max.	ppm by weight	5.4	10	10	20	10	10	10	10	10	10
All Other Volatile Impurities, Max.	% by weight	5.11	0.5	0.5	0.5	0.5	0.5	0.5	0.5	0.5	0.5
High Boiling Residue, Max.	% by volume or % by weight	5.8	0.01	0.01	0.01	0.01	0.01	0.01	0.01	0.01	0.01
Chloride[2]	Pass or Fail	5.6	No visible turbidity	No visible turbidity	No visible turbidity	No visible turbidity	No visible turbidity	No visible turbidity	No visible turbidity	No visible turbidity	No visible turbidity

Table 2A. Zeotropic Blends (400 Series Refrigerants) and their Allowable Levels of Contaminants (continued)

	Reporting Units	Reference Section	**R-429A**	**R-430A**	**R-431A**	**R-434A**	**R-435A**	**R-437A**	**R-438A**	**R-439A**	**R-440A**
CHARACTERISTICS:											
Refrigerant Components	N/A	N/A	R-E170/ 152a/600a	R-152a/ 600a	R290/152a	R-125/ 143a/134a/ 600a	R-E170/ 152a	R-125/ 134a/600 /601	R-32/125/ 134a/600 /601a	R-32/125/ 600a	R-290/ 134a/152a
Nominal Composition	% by weight	N/A	60.0/10.0/ 30.0	76.0/24.0	71.0/29.0	63.2/18.0/ 16.0/2.8	80.0/20.0	19.5/78.5/ 1.4/0.6	8.5/45.0/ 44.2/1.7/ 0.6	50/47.0/ 3.0	0.6/1.6/97.8
Allowable Composition	% by weight	N/A	59.0-61.0/ 9.0-11.0/ 29.0-31.0	75.0-77.0/ 23.0-25.0	70.0-72.0/ 28.0-30.0	62.2-64.2/ 17.0-19.0/ 15.0-17.0/ 2.6-2.9	79.0-81.0/ 19.0-21.0	17.7-20.0/ 77.8-80.0/ 1.2-1.5/ 0.4-0.7	7.0-9.0/ 43.5-46.5/ 42.7-45.7/ 1.5-1.8/ 0.4-0.7	49.0-51.0/ 46.0-48.0/ 2.5-3.5	0.5-0.7/ 1.0-2.2/ 97.3-98.3
Bubble Point[1]	°C @ 101.3 kPa	N/A	-25.5	-27.6	-43.2	-45.1	-26	-32.9	-43	-52	-25.5
Dew Point[1]	°C @ 101.3 kPa	N/A	-24.9	-27.4	-43.2	-42.4	-25.8	-29.2	-36.4	-51.7	-24.3
Critical Temperature[1]	°C	N/A	123.5	107	100.3	75.6	125.2	95.3	84.2	72	112.9
VAPOR PHASE CONTAMINANTS:											
Air and Other Non-condensables, Max.	% by volume @ 25.0 °C	5.10	1.5	1.5	1.5	1.5	1.5	1.5	1.5	1.5	1.5
LIQUID PHASE CONTAMINANTS:											
Water, Maximum	ppm by weight	5.4	10	10	20	20	10	10	20	10	10
All Other Volatile Impurities, Max.	% by weight	5.11	0.5	0.5	0.5	0.5	0.5	0.5	0.5	0.5	0.5
High Boiling Residue, Max.	% by volume or % by weight	5.8	0.01	0.01	0.01	0.01	0.01	0.01	0.01	0.01	0.01
Particulates/Solids	Pass or Fail	5.9	Visually clean	Visually clean	Visually clean	Visually clean	Visually clean	Visually clean	Visually clean	Visually clean	Visually clean
Acidity, Max.	ppm by weight (as HC1)	5.7	1	1	1	1	1	1	1	1	1
Chloride[2]	Pass or Fail	5.6	No visible turbidity	No visible turbidity	No visible turbidity	No visible turbidity	No visible turbidity	No visible turbidity	No visible turbidity	No visible turbidity	No visible turbidity

Table 2A. Zeotropic Blends (400 Series Refrigerants) and their Allowable Levels of Contaminants (continued)

	Reporting Units	Reference Section	**R-442A**	**R-444A**	**R-444B**	**R-445A**	**R-446A**	**R-447A**	**R-448A**	**R-449A**	**R-449B**
CHARACTERISTICS:											
Refrigerant Components	N/A	N/A	R-32/125/ 134a/152a/ 227ea	R-32/152a/ 1234ze(E)	R-32/152a/ 1234ze(E)	R-744/ 134a/ 1234ze(E)	R-32/ 1234ze(E)/ 600	R-32/ 125/ 1234ze (E)	R-32/125/ 1234yf/ 134a/ 1234ze(E)	R-32/125/ 1234yf/ 134a	R-32/125/ 1234yf/134a
Nominal Composition	% by weight	N/A	31.0/31.0/ 30.0/3.0/ 5.0	12.0/5.0/ 83.0	41.5/10.0/ 48.5	6.0/9.0/ 85.0	68.0/29.0/ 3.0	68.0/3.5/ 28.5	26.0/26.0/ 20.0/21.0/ 7.0	24.3/24.7/ 25.3/25.7	25.2/24.3/ 23.2/27.3
Allowable Composition	% by weight	N/A	30.0-32.0/ 30.0-32.0/ 29.0-31.0/ 2.5-3.5/ 4.0- 6.0	11.0-13.0/ 4.0-6.0/ 81.0-85.0	40.5-42.5/ 9.0-11.0/ 47.5-49.5	5.0-7.0/ 8.0-10.0/ 83.0-87.0	67.0-68.5/ 28.4-31.0/ 2.0-3.1	67.5-69.5/ 3.0-5.0/ 27.5-29.5	24.0-26.5/ 25.5-28.0/ 18.0-20.5/ 20.0-23.0/ 5.0-7.5	23.3-24.5/ 24.5-25.7/ 24.3-25.5/ 25.5-26.7	23.7-25.5/ 24.0-25.8/ 21.7-23.5/ 27.0-28.8
Bubble Point[1]	°C @ 101.3 kPa	N/A	-46.5	-34.3	-44.6	-50.3	-49.4	-49.3	-45.9	-46	-46.1
Dew Point[1]	°C @ 101.3 kPa	N/A	-39.9	-24.3	-34.9	-23.5	-42.1	-44.2	-39.8	-39.9	-40.2
Critical Temperature[1]	°C	N/A	82.4	103.2	91.5	98	84.2	82.6	81.6	81.5	84.2
VAPOR PHASE CONTAMINANTS:											
Air and Other Non-condensables, Max.	% by volume @ 25.0 °C	5.10	1.5	1.5	1.5	1.5	1.5	1.5	1.5	1.5	1.5
LIQUID PHASE CONTAMINANTS:											
Water, Maximum	ppm by weight	5.4	10	10	10	10	10	10	10	10	10
All Other Volatile Impurities, Max.	% by weight	5.11	0.5	0.5	0.5	0.5	0.5	0.5	0.5	0.5	0.5
High Boiling Residue, Max.	% by volume or % by weight	5.8	0.01	0.01	0.01	0.01	0.01	0.01	0.01	0.01	0.01
Particulates/Solids	Pass or Fail	5.9	Visually clean	Visually clean	Visually clean	Visually clean	Visually clean	Visually clean	Visually clean	Visually clean	Visually clean
Acidity, Max.	ppm by weight (as HC1)	5.7	1	1	1	1	N/A	1	1	1	1
Chloride[2]	Pass or Fail	5.6	No visible turbidity	No visible turbidity	No visible turbidity	No visible turbidity	No visible turbidity	No visible turbidity	No visible turbidity	No visible turbidity	No visible turbidity

1. Bubble points, dew points, and critical temperatures, although not required, are provided for informational purposes. Refrigerant data compiled from Refprop 9.1.
2. Recognized chloride level for pass/fail is about 3 ppm.

Table 2A. Zeotropic Blends (400 Series Refrigerants) and their Allowable Levels of Contaminants (continued)

	Reporting Units	Reference Section	**R-450A**	**R-451A**	**R-451B**	**R-452A**	**R-453A**	**R-454A**	**R-454B**	**R-455A**
CHARACTERISTICS:										
Refrigerant Components	N/A	N/A	R-134a/ 1234ze(E)	R-1234yf/ 134a	R-1234yf/ 134a	R-32/125/ 1234yf	R-32/125/ 134a/227e/600/601a	R-32/ 1234yf	R-32/ 1234yf	R-744/32/ 1234yf
Nominal Composition	% by weight	N/A	42.0/58.0	89.8/10.2	88.8/11.2	11.0/59.0/ 30.0	20.0/20.0/53.8/ 5.0/0.6/0.6	35.0/65.0	68.9/31.1	3.0/21.5/ 75.5
Allowable Composition	% by weight	N/A	40.0-44.0/ 56.0-60.0	89.6-90.0/ 10.0-10.4	88.6-89.0/ 11.0-11.4	9.3-12.7/ 57.2-60.8/ 29.0-30.1	19.0-21.0/19.0-21.0/ 52.8-54.8/4.5-5.5/ 0.4-0.7/0.4-0.7	33.0-37.0/ 63.0-67.0	67.9-69.9/ 30.1-32.1	2.0-5.0/ 19.5-22.5/ 73.5-77.5
Bubble Point[1]	°C @ 101.3 kPa	N/A	-23.4	-30.8	-31	-47.0	-42.2	-48.4	-50.9	-51.6
Dew Point[1]	°C @ 101.3 kPa	N/A	-22.8	-30.5	-30.6	-43.2	-35	-41.6	-50.0	-39.1
Critical Temperature[1]	°C	N/A	104.4	95.4	95.5	74.9	88	86.2	76.5	82.8
VAPOR PHASE CONTAMINANTS:										
Air and Other Non-condensables, Max.	% by volume @ 25.0 °C	5.10	1.5	1.5	1.5	1.5	1.5	1.5	1.5	1.5
LIQUID PHASE CONTAMINANTS:										
Water, Maximum	ppm by weight	5.4	10	10	10	10	10	10	10	10
All Other Volatile Impurities, Max.	% by weight	5.11	0.5	0.5	0.5	0.5	0.5	0.5	0.5	0.5
High Boiling Residue, Max.	% by volume or % by weight	5.8	0.01	0.01	0.01	0.01	0.01	0.01	0.01	0.01
Particulates/Solids	Pass or Fail	5.9	Visually clean	Visually clean	Visually clean	Visually clean	Visually clean	Visually clean	Visually clean	Visually clean
Acidity, Max.	ppm by weight (as HC1)	5.7	1	1	1	1	N/A	1	1	1
Chloride[2]	Pass or Fail	5.6	No visible turbidity	No visible turbidity	No visible turbidity	No visible turbidity	No visible turbidity	No visible turbidity	No visible turbidity	No visible turbidity

1. Bubble points, dew points, and critical temperatures, although not required, are provided for informational purposes. Refrigerant data compiled from Refprop 9.1.
2. Recognized chloride level for pass/fail is about 3 ppm.

Table 2B. Hydrocarbon Blends (400 & 500 Series Refrigerants) and their Allowable Levels of Contaminants

	Reporting Units	Reference Section	**R-432A**	**R-433A**	**R-433B**	**R-433C**	**R-436A**	**R-436B**	**R-441A**	**R-443A**
CHARACTERISTICS:										
Refrigerant Components	N/A	N/A	R-1279/E170	R-1270/290	R-1270/290	R-1270/290	R-290/600a	R-290/600a	R-170/ 290/600a/600	R-1270/ 290/600a
Nominal Composition	% by weight	N/A	80.0/20.0	30.0/70.0	5.0/95.0	25.0/75.0	56.0/44.0	52.0/48.0	3.1/54.8/6.0/36.1	55.0/40.0/5.0
Allowable Composition	% by weight	N/A	79.0-81.0/ 19.0-21.0	29.0-31.0/ 69.0-71.0	4.0-6.0/ 94.0- 96.0	24.0-26.0/ 74.0-76.0	55.0-57.0/ 43.0-45.0	51.0-53.0/ 47.0- 49.0	2.8-2.4/52.8-56.8/ 5.4-6.6/34.1-38.1	53.0-57.0/ 38.0-42.0/ 3.8-6.2
Bubble Point[1]	°C @ 101.3 kPa	N/A	-45.2	-44.4	-42.5	-44.1	-34.3	-33.3	-41.5	-45.2
Dew Point[1]	°C @ 101.3 kPa	N/A	-42.4	-44	-42.4	-43.7	-26.1	-25	-20.3	-42.1
Critical Temperature[1]	°C	N/A	97.3	94.4	96.3	94.8	115.9	117.4	117.3	95.1
VAPOR PHASE CONTAMINANTS[2]:										
Air and Other Non-condensables, Max.	% by volume @ 25.0°C	5.10	1.5	1.5	1.5	1.5	1.5	1.5	1.5	1.5
LIQUID PHASE CONTAMINANTS[3]:										
Sulfur Odor[4]	No odor to pass	Pass	Pass	Pass	Pass	Pass	Pass	Pass	Pass	Pass
High Boiling Residue, Max.	% by volume or % by weight	5.8	0.01	0.01	0.01	0.01	0.01	0.01	0.01	0.01
Particulates/Solids	Pass or Fail	5.9	Visually clean	Visually clean	Visually clean	Visually clean	Visually clean	Visually clean	Visually clean	Visually clean
Acidity, Max.	ppm by weight	5.7	1	1	1	1	1	1	1	N/A
Water, Max.	ppm by weight	5.4	20	10	10	10	10	10	10	10
All Other Volatile Impurities, Max.	% by weight	5.11	0.5	0.5	0.5	0.5	0.5	0.5	0.5	0.5
Total C3, C4 and C5 Polyolefins, Max.	% by weight	5.12	0.05	0.05	0.05	0.05	0.05	0.05	0.05	0.05
Chloride[2]	Pass or Fail	5.6	No visible turbidity	No visible turbidity	No visible turbidity	No visible turbidity	No visible turbidity	No visible turbidity	N/A	N/A

1. Bubble points, dew points, and critical temperatures, although not required, are provided for informational purposes. Refrigerant data compiled from Refprop 9.1.
2. Taken from vapor phase
3. Vaporized from liquid phase
4. Including hydrogen sulphide and mercaptans

Table 3. Azeotropic Blends (500 Series Refrigerants) and their Allowable Levels of Contaminants

	Reporting Units	Reference Section	R-500	R-502	R-503	R-507A	R-508A	R-508B	R-509A	R-510A	R-511A	R-512A	R-513A
CHARACTERISTICS:													
Refrigerant Components	N/A	N/A	R-12/152a	R-22/115	R-23/13	R-125/143a	R-23/116	R-23/116	R-22/218	R-E170/600a	R-290/E170	R-134a/152a	R-1234yf/134a
Nominal Composition	% by weight	N/A	73.8/26.2	48.8/51.2	40.1/59.9	50.0/50.0	39.0/61.0	46.0/54.0	44.0/56.0	88.0/12.0	95.0/5.0	5.0/95.0	56.0/44.0
Allowable Composition	% by weight	N/A	72.8-74.8/25.2-27.2	44.8-52.8/47.2-55.2	39.0-41.0/59.0-61.0	49.5-51.5/48.5-50.5	37.0-41.0/59.0-63.0	44.0-48.0/52.0-56.0	42.0-46.0/56.0-60.0	87.5-88.5/11.5-12.5	94.0-96.0/4.0-6.0	4.0-6.0/94.0-96.0	55.0-57.0/43.0-45.0
Bubble Point[1]	°C @ 101.3 kPa	N/A	-33.6	-45.2	-87.8	-46.7	-87.4	-87	-49.8	-24.9	-42	-24	-29.2
Dew Point[1]	°C @ 101.3 kPa	N/A	-33.6	-45	-87.8	-46.7	-87.4	-87	-48.1	-24.9	-42	-24	-29.1
Critical Temperature[1]	°C	N/A	102.1	80.2	18.4	70.6	10.8	11.8	68.6	125.7	97	112.9	96.5
VAPOR PHASE CONTAMINANTS:													
Air and Other Non-condensables, Max.	% by volume @ 25 °C	5.10	1.5	1.5	1.5	1.5	1.5	1.5	1.5	1.5	1.5	1.5	1.5
LIQUID PHASE CONTAMINANTS:													
Water, Maximum	ppm by weight	5.4	10	10	10	10	10	10	10	20	20	10	10
All Other Volatile Impurities, Max.	% by weight	5.11	0.5	0.5	0.5	0.5	0.5	0.5	0.5	0.5	0.5	0.5	0.5
High Boiling Residue, Max.	% by volume or % by weight	5.8	0.01	0.01	0.01	0.01	0.01	0.01	0.01	0.01	0.01	0.01	0.01
Particulates/Solids	Pass or Fail	5.9	Visually clean	Visually clean	Visually clean	Visually clean	Visually clean	Visually clean	Visually clean	Visually clean	Visually clean	Visually clean	Visually clean
Acidity, Max.	ppm by weight	5.7	1	1	1	1	1	1	1	1	1	1	1
Chloride[2]	Pass or Fail	5.6	No visible turbidity	No visible turbidity	No visible turbidity	No visible turbidity	No visible turbidity	No visible turbidity	No visible turbidity	No visible turbidity	No visible turbidity	No visible turbidity	No visible turbidity

1. Bubble points, dew points, and critical temperatures, although not required, are provided for informational purposes. Refrigerant data compiled from Refprop 9.1.
2. Recognized chloride level for pass/fail is about 3 ppm.

SECTION 7.0 REFERENCES—NORMATIVE

All references in this appendix are considered as part of this standard.

Listed here are all standards, handbooks, and other publications essential to the formation and implementation of the standard.

ANSI/ASHRAE Standard 34–2013, *Designation and Safety Classification of Refrigerants,*

with Addenda, American National Standards Institute/American Society of Heating, Refrigerating, and Air-Conditioning Engineers.

2008 Appendix C to AHRI Standard 700–2014, *2008 Appendix C for Analytical Procedures for AHRI Standard 700–2014—Normative*, copyright 2008 (incorporated by reference, see § 82.168).

ASTM D1296–01 (Reapproved 2012), *Standard Test Method for Odor of Volatile Solvents and Diluents*, approved July 1, 2012, (incorporated by reference, see § 82.168).

BB–F–1421B, Federal Specification for ''Fluorocarbon Refrigerants,'' dated March 5, 1982, (incorporated by reference, see § 82.168).

GPA Standard 2177–13, *Analysis of Natural Gas Liquid Mixtures Containing Nitrogen and Carbon Dioxide by Gas Chromatography, Revised*, copyright 2013, (incorporated by reference, see § 82.168).

REFPROP Reference Fluid Thermodynamic and Transport Properties *NIST Standard Reference Database 23 version 9.1*, 2013, U.S. Department of Commerce, Technology Administration, National Institute of Standards and Technology.

SECTION 8.0 REFERENCES—INFORMATIVE

Listed here are standards, handbooks, and other publications which may provide useful information and background but are not considered essential.

2012 Appendix D to AHRI Standard 700–2014, *2012 Appendix D for Gas Chromatograms for AHRI Standard 700–2014—Informative*, copyright 2012, (incorporated by reference, see § 82.168).

[81 FR 82365, Nov. 18, 2016]

APPENDIX A1 TO SUBPART F OF PART 82—GENERIC MAXIMUM CONTAMINANT LEVELS

Contaminant	Reporting units
Air and Other Non-condensables.	1.5% by volume @ 25 °C (N/A for refrigerants used in low-pressure appliances [1]).
Water	10 ppm by weight 20 ppm by weight (for refrigerants used in low-pressure appliances [1]).
Other Impurities Including Refrigerant.	0.50% by weight.
High boiling residue	0.01% by volume.
Particulates/solids	visually clean to pass.
Acidity	1.0 ppm by weight.
Chlorides (chloride level for pass/fail is 3ppm).	No visible turbidity.

[1] Low-pressure appliances means an appliance that uses a refrigerant with a liquid phase saturation pressure below 45 psia at 104 °F.

BLEND COMPOSITIONS (WHERE APPLICABLE)

Nominal composition (by weight%)	Allowable composition (by weight%)
Component constitutes 25% or more	±2.0
Component constitutes less than 25% but greater than 10%	±1.0
Component constitutes less than or equal to 10%	±0.5

[69 FR 11988, Mar. 12, 2004]

APPENDIX B1 TO SUBPART F OF PART 82—PERFORMANCE OF REFRIGERANT RECOVERY, RECYCLING AND/OR RECLAIM EQUIPMENT

This appendix is based on the Air-Conditioning and Refrigeration Institute Standard 740–1993.

REFRIGERANT RECOVERY/RECYCLING EQUIPMENT

Section 1. Purpose

1.1 *Purpose*. The purpose of this standard is to establish methods of testing for rating and evaluating the performance of refrigerant recovery, and/or recycling equipment, and general equipment requirements (herein referred to as ''equipment'') for containment or purity levels, capacity, speed, and purge loss to minimize emission into the atmosphere of designated refrigerants.

1.1.1 This standard is intended for the guidance of the industry, including manufacturers, refrigerant reclaimers, repackers, distributors, installers, servicemen, contractors and for consumers.

1.1.2 This standard is not intended to be used as a guide in defining maximum levels of contaminants in recycled or reclaimed refrigerants used in various applications.

1.2 *Review and Amendment*. This standard is subject to review and amendment as the technology advances.

Section 2. Scope

2.1 *Scope*. This standard defines general equipment requirements and the test apparatus, test mixtures, sampling and analysis techniques that will be used to determine the performance of recovery and/or recycling equipment for various refrigerants including R11, R12, R13, R22, R113, R114, R123, R134a, R500, R502, and R503, as referenced in the ANSI/ASHRAE Standard 34–1992, ''Number Designation of Refrigerants'' (American Society of Heating, Refrigerating, and Air Conditioning Engineers, Inc.).

Section 3. Definitions

3.1 *Recovered refrigerant*. Refrigerant that has been removed from a system for the purpose of storage, recycling, reclamation or transportation.

3.2 Recover. Reference 40 CFR 82.152.

3.3 Recycle. Reference 40 CFR 82.152.

3.4 Reclaim. Reference 40 CFR 82.152.

3.5 *Standard Contaminated Refrigerant Sample*. A mixture of new and/or reclaimed refrigerant and specified quantities of identified contaminants which are representative of field obtained, used refrigerant samples and which constitute the mixture to be processed by the equipment under test.

3.6 *Push/Pull Method*. The push/pull refrigerant recovery method is defined as the process of transferring liquid refrigerant from a refrigeration system to a receiving vessel by lowering the pressure in the vessel and raising the pressure in the system, and by connecting a separate line between the system liquid port and the receiving vessel.

3.7 *Recycle Rate*. The amount of refrigerant processed (in pounds) divided by the time elapsed in the recycling mode in pounds per minute. For equipment which uses a separate recycling sequence, the recycle rate does not include the recovery rate (or elapsed time). For equipment which does not use a separate recycling sequence, the recycle rate is a maximum rate based solely on the higher of the liquid or vapor recovery rate, by which the rated contaminant levels can be achieved.

3.8 *Equipment Classification*.

3.8.1 *Self Contained Equipment*. A refrigerant recovery or recycling system which is capable of refrigerant extraction without the assistance of components contained within an air conditioning or refrigeration system.

3.8.2 *System Dependent Equipment*. Refrigerant recovery equipment which requires for its operation the assistance of components contained in an air conditioning or refrigeration system.

3.9 *''Shall''*, *''Should''*, *''Recommended''* or *''It is Recommended''*, ''Shall'' ''Should'', ''recommended'', or ''it is recommended'' shall be interpreted as follows:

3.9.1 *Shall*. Where ''shall'' or ''shall not'' is used for a provision specified, that provision is mandatory if compliance with the standard is claimed.

3.9.2 *Should*, *Recommended*, or *It is Recommended*, ''Should'', ''recommended'', is used to indicate provisions which are not mandatory but which are desirable as good practice.

Section 4. General Equipment Requirements

4.1 The equipment manufacturer shall provide operating instructions, necessary maintenance procedures, and source information for replacement parts and repair.

4.2 The equipment shall indicate when any filter/drier(s) needs replacement. This requirement can be met by use of a moisture transducer and indicator light, by use of a sight glass/moisture indicator, or by some measurement of the amount of refrigerant processed such as a flow meter or hour meter. Written instructions such as ''to change the filter every 400 pounds, or every 30 days'' shall not be acceptable except for equipment in large systems where the Liquid Recovery Rate is greater than 25 lbs/min [11.3 Kg/min] where the filter/drier(s) would be changed for every job.

4.3 The equipment shall either automatically purge non-condensables if the rated level is exceeded or alert the operator that the non-condensable level has been exceeded. While air purge processes are subject to the requirements of this section, there is no specific requirement to include an air purge process for ''recycle'' equipment.

4.4 The equipment's refrigerant loss due to non-condensable purging shall not be exceeded 5% by weight of total recovered refrigerant. (See Section 9.4)

4.5 Internal hose assemblies shall not exceed a permeation rate of 12 pounds mass per square foot [5.8 g/cm^2] of internal surface per year at a temperature of 120 F [48.8 °C] for any designated refrigerant.

4.6 The equipment shall be evaluated at 75 F [24 °C] per 7.1. Normal operating conditions range from 50 °F to 104 F [10 °C to 40 °C].

4.7 *Exemptions:*

4.7.1 Equpment intended for recovery only shall be exempt from sections 4.2 and 4.3.

TABLE 1—STANDARD CONTAMINATED REFRIGERANT SAMPLES

	R11	R12	R13	R22	R113	R114	R123	R134a	R500	R502	R503
Moisture content: PPM by weight of pure refrigerant	100	80	30	200	100	85	100	200	200	200	30
Particulate content: PPM by weight of pure refrigerant characterized by [1]	80	80	80	80	80	80	80	80	80	80	80

TABLE 1—STANDARD CONTAMINATED REFRIGERANT SAMPLES—Continued

	R11	R12	R13	R22	R113	R114	R123	R134a	R500	R502	R503
Acid content:											
PPM by weight of pure refrigerant—(mg KOH per kg refrig.) characterized by[2]	500	100	NA	500	400	200	500	100	100	100	NA
Mineral oil content:											
% by weight of pure refrigerant	20	5	NA	5	20	20	20	5	5	5	NA
Viscosity (SUS)	300	150	.....	300	300	300	300	150	150	150	
Non condensable gases air content % volume[3] ≤	NA	3	3	3	NA	3	3	3	3	3	3

[1] Particulate content shall consist of inert materials and shall comply with particulate requirements in *ASHRAE* Standard 63.2, "Method of Testing of Filtration Capacity of Refrigerant Liquid Line Filters and Filter Driers."
[2] Acid consists of 60% oleic acid and 40% hydrochloric acid on a total number basis.
[3] Synthetic ester based oil.

Section 5. Contaminated Refrigerants

5.1 The standard contaminated refrigerant sample shall have the characteristics specified in Table 1, except as provided in 5.2

5.2 Recovery equipment not rated for any specific contaminant can be tested with new or reclaimed refrigerant.

Section 6. Test Apparatus

6.1 Self Contained Equipment Test Apparatus. The apparatus as shown in Figure 1 consists of a 3 cubic foot [0.085 m^3] mixing chamber with a conical-shaped bottom, although a larger mixing chamber is permissible. The size of the mixing chamber depends upon the size of the equipment. The outlet at the bottom of the cone and all restrictions and valves for liquid and vapor refrigerant lines in the test apparatus shall be a minimum of 0.375 in. [9.5 mm] inside diameter or equivalent. The minimum inside diameter for large equipment for use on chillers shall be 1.5 in. [38 mm.]. The mixing chamber shall contain various ports for receiving liquid refrigerant, oil, and contaminants. A recirculating line connected from the bottom outlet through a recirculating pump and then to a top vapor port shall be provided for stirring of the mixture. Isolation valves may be required for the pump. Alternative stirring means may be used if demonstrated to be equally effective.

6.1.1 For liquid refrigerant feed, the liquid valve is opened. For vapor refrigerant feed, the vapor valve is opened and refrigerant passes through an evaporator coil. Flow is controlled by a thermostatic expansion valve to create 5 F [3 °C] superheat at an evaporator temperature of 70 F ±3 F[21 °C±2°]. The evaporator coil or equivalent evaporator means shall be either sized large enough for the largest system or be sized for each system.

6.1.2 An alternative method for vapor refrigerant feed is to pass through a boiler and then an automatic pressure regulating valve set at refrigerant saturation pressure at 75 F ±3 F [24 °C ±2 °C].

6.2 System Dependent Equipment Test Apparatus. This test apparatus is to be used for final recovery vacuum rating of all system dependent equipment.

6.2.1 The test apparatus shown in Figure 2 consists of a complete refrigeration system. The manufacturer shall identify the refrigerants to be tested. The test apparatus can be modified to facilitate operation or testing of the system dependent equipment if the modifications to the apparatus are specifically described within the manufacturer's literature. (*See Figure 2.*) A ¼ inch [6.3 mm] balance line shall be connected across the test apparatus between the high and low pressure sides, with an isolation valve located at the connection to the compressor high side. A ¼ inch [6.3 mm] access port with a valve core shall be located in the balance line for the purpose of measuring final recovery vacuum at the conclusion of the test.

FIGURE 1

Test Apparatus for Self-Contained Equipment

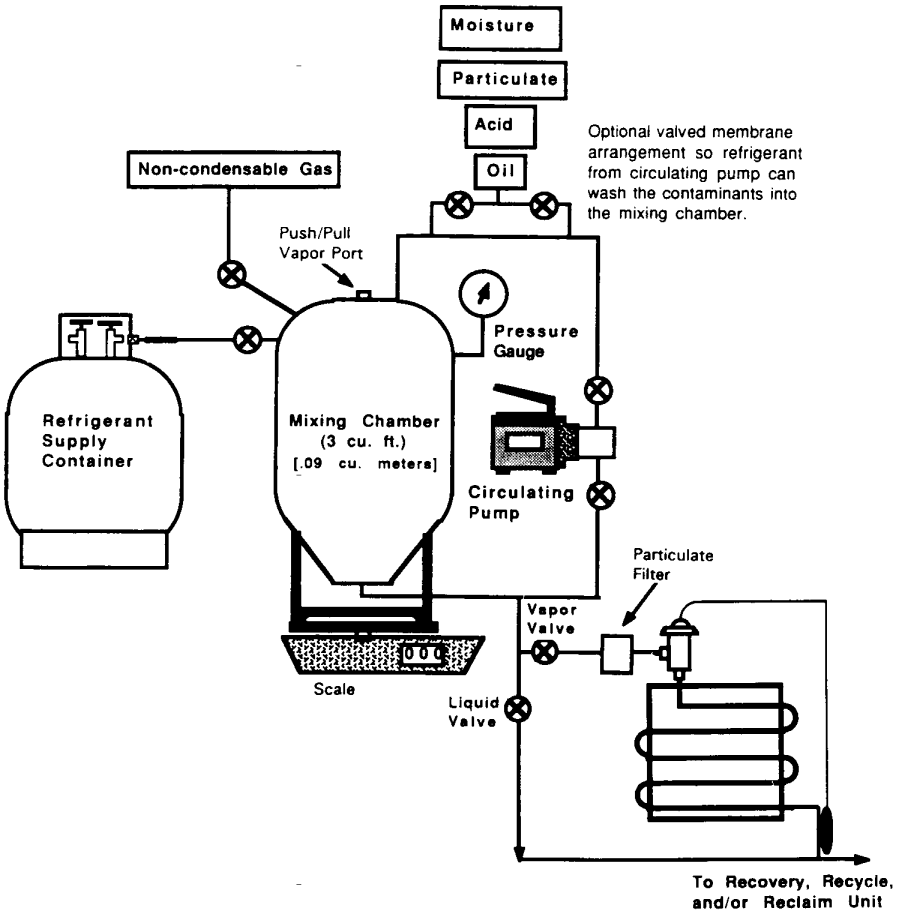

FIGURE 2

System-Dependent Equipment Test Apparatus

Configuration of a standard air conditioning or refrigeration system for use as a test apparatus

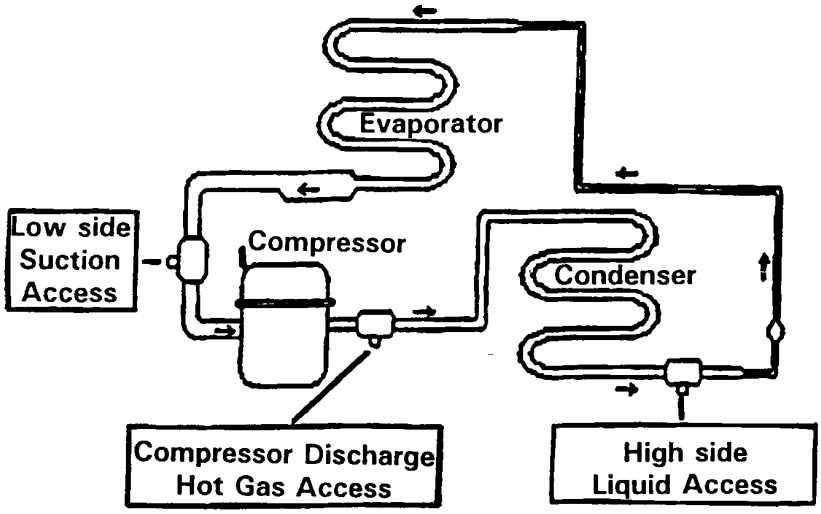

Section 7. Performance Testing

7.1 Contaminant removal and performance testing shall be conducted at 75 F ±2 F [23.9 °C ±1.1 °C].

7.1.1 The equipment shall be prepared for operation per the instruction manual.

7.1.2 The contaminated sample batch shall consist of not less than the sum of the amounts required to complete steps 7.1.2.2 and 7.1.2.3 below.

7.1.2.1 A liquid sample shall be drawn from the mixing chamber prior to starting the test to assure quality control of the mixing process.

7.1.2.2 Vapor refrigerant feed testing, if elected, shall normally be processed first. After the equipment reaches stabilized conditions of condensing temperature and/or storage tank pressure, the vapor feed recovery rate shall be measured. One method is to start measuring the vapor refrigerant recovery rate when 85% of refrigerant remains in the mixing chamber and continue for a period of time sufficient to achieve the accuracy in 9.2. If liquid feed is not elected, complete Step 7.1.2.4.

7.1.2.3 Liquid refrigerant feed testing, if elected, shall be processed next. After the equipment reaches stabilized conditions, the liquid feed recovery rate shall be measured. One method is to wait 2 minutes after starting liquid feed and then measure the liquid refrigerant recovery rate for a period of time sufficient to achieve the accuracy in 9.1. Continue liquid recovery operation as called for in 7.1.2.4.

7.1.2.4 Continue recovery operation until all liquid is removed from the mixing chamber and vapor is removed to the point where the equipment shuts down per automatic means or is manually stopped per the operating instructions.

7.1.2.5 After collecting the first contaminated refrigerant sample batch, the liquid and vapor value of the apparatus shall be closed and the mixing chamber pressure recorded after 1 minute as required in 9.5. After preparing a second contaminated refrigerant sample batch, continue recovery until the storage container reaches 80% liquid fill level. After recycling and measuring

the recycle rate per section 7.1.3, set this container aside for the vapor sample in 8.2.2.

7.1.2.6 Interruptions in equipment operations as called for in instruction manual are allowable.

7.1.3 Recycle as called for in equipment operating instructions. Determine recycle rate by appropriate means as required in 9.3.

7.1.4 Repeat steps 7.1.2, 7.1.2.4, and 7.1.3 with contaminated refrigerant sample until equipment indicator(s) show need to change filter(s). It will not be necessary to repeat the recycle rate determination in 7.1.3.

7.1.4.1 For equipment with a multiple pass recirculating filter system, analyze the contents of the previous storage container.

7.1.4.2 For equipment with a single pass filter system, analyze the contents of the current storage container.

7.1.5 Refrigerant loss due to the equipment's non-condensable gas purge shall be determined by appropriate means. (See Section 9.4.)

7.2 System Dependent Equipment. This procedure shall be used for vacuum rating of all system dependent equipment. Liquid refrigerant recovery rate, vapor refrigerant recovery rate, and recycle rate are not tested on system dependent systems.

7.2.1 The apparatus operation and testing shall be conducted at 75 F ±2 F. [23.9 °C. ±/1.1. °C.].

7.2.2 The apparatus shall be charged with refrigerant per its system design specifications.

7.2.3 For measurement of final recovery vacuum as required in 9.5, first shut the balance line isolation valve and wait 1 minute for pressure to balance. Then connect and operate the recovery system per manufacturers recommendations. When the evacuation is completed, open the balance line isolation valve and measure the pressure in the balance line.

Section 8. Sampling and Chemical Analysis Methods

8.1 The referee test methods for the various contaminants are summarized in the following paragraphs. Detailed test procedures are included in Appendix A ''Test Procedures for ARI STD 700.'' If alternate test methods are employed, the user must be able to demonstrate that they produce results equivalent to the specified referee method.

8.2 *Refrigerant Sampling.*

8.2.1 *Sampling Precautions.* Special precautions should be taken to assure that representative samples are obtained for analysis. Sampling shall be done by trained laboratory personnel following accepted sampling and safety procedures.

8.2.2 *Gas Phase Sample.* A gas phase sample shall be obtained for determining the non-condensables. Since non-condensable gases, if present, will concentrate in the vapor phase of the refrigerant, care must be exercised to eliminate introduction of air during the sample transfer. Purging is not and acceptable procedure for a gas phase sample since it may introduce a foreign product. Since R11, R113 and R123 have normal boiling points at or above room temperature, non-condensable determination is not required for these refrigerants.

8.2.2.1 The sample cylinder shall be connected to an evacuated gas sampling bulb by means of a manifold. The manifold should have a valve arrangement that facilitates evacuation of all connecting tubing leading to the sampling bulb.

8.2.2.2 After the manifold has been evacuated, close the valve to the pump and open the valve on the system. Allow the pressure to equilibrate and close valves.

8.2.3 *Liquid Phase Sample.* A liquid phase sample is required for all tests listed in this standard, except the test for non-condensables.

8.2.3.1 Place an empty sample cylinder with the valve open in an oven at 230 F [110 °C] for one hour. Remove it from the oven while hot, immediately connect to an evacuation system and evacuate to less than 1mm. mercury (1000 microns). Close the valve and allow it to cool.

8.2.3.2 The valve and lines from the unit to be sampled shall be clean and dry. Connect the line to the sample cylinder loosely. Purge through the loose connection. Make the connection tight at the end of the purge period. Take the sample as a liquid by chilling the sample cylinder slightly. Accurate analysis requires that the sample container be filled to at least 60% by volume; however under no circumstances should the cylinder be filled to more than 80% by volume. This can be accomplished by weighing the empty cylinder and then the cylinder with refrigerant. When the desired amount of refrigerant has been collected, close the valve(s) and disconnect the sample cylinder immediately.

8.2.3.3 Check the sample cylinder for leaks and record the gross weight.

8.3 *Water Content.*

8.3.1. The Coulometric Karl Fischer Titration shall be the primary test method for determining the water content of refrigerants. This method is described in Appendix A. This method can be used for refrigerants that are either a liquid or a gas at room temperature, including Refrigerants 11 and 13. For all refrigerants, the sample for water analysis shall be taken from the liquid phase of the container to be tested. Proper operation of the analytical method requires special equipment and an experienced operator. The precision of the results is excellent if proper sampling and handling procedures are followed. Refrigerants containing a colored dye can be successfully analyzed for water using this method.

8.3.2 The Karl Fischer Test Method is an acceptable alternative test method for determining the water content of refrigerants. This method is described in ASTM Standard for ''Water in gases Using Karl Fisher Reagent'' E700–79, reapproved 1984 (American Society for Testing and Materials, Philadelphia, PA).

8.3.3 Report the moisture level in parts per million by weight if a sample is required.

8.4 *Chloride*. The refrigerant shall be tested for chlorides as an indication of the presence of hydrochloric or similar acids. The recommended procedure is intended for use with new or reclaimed refrigerants. Significant amounts of oil may interfere with the results by indicating a failure in the absence of chlorides.

8.4.1 The test method shall be that described in Appendix A ''Test Procedures for ARI–700.'' The test will show noticeable turbidity at equivalent chloride levels of about 3 ppm by weight or higher.

8.4.2 The results of the test shall not exhibit any sign of turbity. Report results as ''pass'' or ''fail.''

8.5 *Acidity*.

8.5.1 The acidity test uses the titration principle to detect any compound that is highly soluble in water and ionizes as an acid. The test method shall be that described in Appendix A. ''Test Procedures for ARI–700.'' The test may not be suitable for determination of high molecular weight organic acids; however these acids will be found in the high boiling residue test outlined in Section 5.7. The test requires about a 100 to 120 gram sample and has a low detection limit of 0.1 ppm by weight as HC1.

8.6 High Boiling Residue.

8.6.1 High boiling residue will be determined by measuring the residue of a standard volume of refrigerant after evaporation. The refrigerant sample shall be evaporated at room temperature or a temperature 50 F [10°.0C], above the boiling point of the sample using a Goetz tube as specified in Appendix A ''Test Procedures for ARI–700.'' Oils and or organic acids will be captured by this method.

8.6.2 The value for high boiling residue shall be expressed as a percentage by volume.

8.7 Particulates/Solids.

8.7.1 A measured amount of sample is evaporated from a Goetz bulb under controlled temperature conditions. The particulates/solids shall be determined by visual examination of the empty Goetz bulb after the sample has evaporated completely. Presence of dirt, rust or other particulate contamination is reported a ''fail.'' For details of this test method, refer to Appendix B ''Test Procedures for ARI–700.''

8.8 Non-Condensables

8.8.1 A vapor phase sample shall be used for determination of non-condensables. Non-condensable gases consist primarily of air accumulated in the vapor phase of refrigerant containing tanks. The solubility of air in the refrigerants liquid phase is extremely low and air is not significant as a liquid phase contaminant. The presence of non-condensable gases may reflect poor quality control in transferring refrigerants to storage tanks and cylinders.

8.8.2 The test method shall be gas chromatography with a thermal conductivity detector as described in Appendix A ''Test Procedures for ARI–700.''

8.8.2.1 The Federal Specification for ''Fluorocarbon Refrigerants,'' BB–F–1421B, dated March 5, 1992, section 4.4.2 (perchloroethylene method) is an acceptable alternate test method.

8.8.3 Report the level of non-condensable as percent by volume.

Section 9. Performance Calculation and Rating

9.1 The liquid refrigerant recovery rate shall be expressed in pounds per minute [kg/min] and measured by weight change at the mixing chamber (See Figure 1) divided by elapsed time to an accuracy within .02 lbs/min. [.009 kg/min]. Ratings using the Push/Pull method shall be identified ''Push/Pull''. Equipment may be rated by both methods.

9.2 The vapor refrigerant recovery rate shall be expressed in pounds per minute [kg/min] and measured by weight change at the mixing chamber (See Figure 1) divided by elapsed time to an accuracy within .02 lbs/min. [.0.009 kg/min].

9.3 The recycle rate is defined in 3.7 and expressed in pounds per minute [kg/min] of flow and shall be per ASHRAE 41.7–84 ''Procedure For Fluid Measurement Of Gases'' or ASHRAE 41.8–89 ''Standard Method of Flow of Fluids—Liquids.''

9.3.1 For equipment using multipass recycling or a separate sequence, the recycle rate shall be determined by dividing the net weight W of the refrigerant to be recycled by the actual time T required to recycle the refrigerant. Any set-up or operator interruptions shall not be included in the time T. The accuracy of the recycle rate shall be within .02 lbs/min. [.009 kg/min].

9.3.2 If no separate recycling sequence is used, the recycle rate shall be the higher of the vapor refrigerant recovery rate or the liquid refrigerant recovery rate. The recycle rate shall match a process which leads to contaminant levels in 9.6. Specifically, a recovery rate determined from bypassing a contaminant removal device cannot be used as a recycle rate when the contaminant levels in 9.6 are determined by passing the refrigerant through the containment removal device.

9.4 Refrigerant loss due to non-condensable purging shall be less than 5%. This rating shall be expressed as ''passed'' if less than 5%.

This calculation will be based upon net loss of non-condensables and refrigerant due to the purge divided by the initial net content. The net loss shall be determined by weighing before and after the purge, by collecting purged gases, or an equivalent method.

9.5 The final recovery vacuum shall be the mixing chamber pressure called for in 7.1.2.5 expressed in inches of mercury vacuum, [mm Hg or kP]. The accuracy of the measurement shall be within ±.1 inch [±2.5mm] of Hg and rounding down to the nearest whole number.

9.6 The contaminant levels remaining after testing shall be published as follows:

Moisture content, PPM by weight
Chloride ions, Pass/Fail
Acidity, PPM by weight
High boiling residue, percentage by volume
Particulate/solid, Pass/Fail
Non-condensables, % by volume

9.7 Product Literature: Except as provided under product labelling in Section 11. performance ratings per 9.1, 9.2, 9.3, and 9.5 must be grouped together and shown for all listed refrigerants (11.2) subject to limitations of 9.8. Wherever any contaminant levels per 9.6 are rated, all ratings in 9.6 must be shown for all listed refrigerants subject to limitations of 9.8. The type of equipment in 11.1 must be included with either grouping. Optional ratings in 9.8 need not be shown.

9.8 Ratings shall include all of the parameters for each designed refrigerant in 11.2 as shown in Tables 2 and 3.

TABLE 2—PERFORMANCE

Parameter/type of equipment	Recovery	Recovery/recycle	Recycle	System dependent equipment
Liquid refrigerant recovery rate	(2)	(2)	N/A	N/A
Vapor refrigerant recovery rate	(2)	(2)	N/A	N/A
Final recovery vacuum	(1)	(1)	N/A	(1)
Recycle rate	N/A	(1)	(1)	N/A
Refrigerant loss due to non-condensable purging	(3)	(1)	(1)	N/A

[1] Mandatory rating.
[2] For a recovery or recovery/recycle unit, one must rate for either liquid feed only or vapor feed only or can rate for both. If rating only the one, the other shall be indicated by "N/A."
[3] For Recovery Equipment, these parameters are optional. If not rated, use N/A.

TABLE 3—CONTAMINANTS

Contaminant/type of equipment	Recovery	Recovery/recycle	Recycle	System dependent equipment
Moisture content	(*)	x	x	NA.
Chloride ions	(*)	x	x	NA.
Acidity	(*)	x	x	NA.
High boiling residue	(*)	x	x	NA.
Particulates	(*)	x	x	NA.
Non-condensables	(*)	x	x	NA.

* For Recovery Equipment, these parameters are optional. If not rated, use N/A.
x Mandatory rating.

Section 10. Tolerances

10.1 Any equipment tested shall produce contaminant levels not higher than the published ratings. The liquid refrigerant recovery rate, vapor refrigerant recovery rate, final recovery vacuum and recycle rate shall not be less than the published ratings.

Section 11. Product Labelling

11.1 *Type of equipment*. The type of equipment shall be as listed:

11.1.1 Recovery only
11.1.2 System Dependent Recovery
11.1.3 Recovery/Recycle
11.1.4 Recycle only

11.2 Designated refrigerants and the following as applicable for each:

11.2.1 Liquid Recovery Rate
11.2.2 Vapor Recovery Rate
11.2.3 Final Recovery Vacuum
11.2.4 Recycle Rate

11.3 The nameplate shall also conform to the labeling requirements established for certified recycling and recovery equipment established at 40 CFR 82.158(h).

ATTACHMENT TO APPENDIX B1

Particulate Used in Standard Contaminated Refrigerant Sample.

1. Particulate Specification

1.1 The particulate material pm will be a blend of 50% coarse air cleaner dust as received, and 50% retained on a 200-mesh screen. The coarse air cleaner dust is available from: AC Spark Plug Division, General Motors Corporation, Flint, Michigan.

1.2 Preparation of Particulate Materials

To prepare the blend of contaminant, first wet screen a quantity of coarse air cleaner dust on a 200-mesh screen (particle retention 74 pm). This is done by placing a portion of the dust on a 200-mesh screen and running water through the screen while stirring the dust with the fingers. The fine contaminant particles passing through the screen are discarded. The +200 mesh particles collected on the screen are removed and dried for one hour at 230 F [110 °C]. The blend of standard contaminant is prepared by mixing 50% by weight of coarse air cleaner dust as received after drying for one hour at 230 F [110 °C] with 50% by weight of the +200 mesh screened dust.

1.3 The coarse air cleaner dust as received and the blend used as the standard contaminant have the following approximate particle size analysis: Wt. % in various size ranges, pm.

Size range	As received	Blend
0–5	12	6
5–10	12	6
10–20	14	7
20–40	23	11
40–80	30	32
80–200	9	38

[58 FR 28712, May 14, 1993, as amended at 59 FR 42960, Aug. 19, 1994. Redesignated and amended at 68 FR 43815, July 24, 2003]

APPENDIX B2 TO SUBPART F OF PART 82—PERFORMANCE OF REFRIGERANT RECOVERY, RECYCLING, AND/OR RECLAIM EQUIPMENT

This appendix is based on the Air-Conditioning and Refrigeration Institute Standard 740–1995.

Section 1. Purpose

1.1 *Purpose*. The purpose of this standard is to establish methods of testing for rating and evaluating the performance of refrigerant recovery, and/or recycling equipment and general equipment requirements (herein referred to as ''equipment'') for contaminant or purity levels, capacity, speed and purge loss to minimize emission into the atmosphere of designated refrigerants.

Section 2. Scope

2.1 *Scope*. This standard applies to equipment for recovering and/or recycling single refrigerants, azeotropics, zeotropic blends, and their normal contaminants from refrigerant systems. This standard defines the test apparatus, test gas mixtures, sampling procedures and analytical techniques that will be used to determine the performance of refrigerant recovery and/or recycling equipment (hereinafter, ''equipment'').

Section 3. Definitions

3.1 *Definitions*. All terms in this appendix will follow the definitions in §82.152 unless otherwise defined in this appendix.

3.2 *Clearing Refrigerant*. Procedures used to remove trapped refrigerant from equipment before switching from one refrigerant to another.

3.3 *High Temperature Vapor Recovery Rate*. For equipment having at least one designated refrigerant (see 11.2) with a boiling point in the range of −50 to +10 °C, the rate will be measured for R–22, or the lowest boiling point refrigerant if R–22 is not a designated refrigerant.

3.4 *Published Ratings*. A statement of the assigned values of those performance characteristics, under stated rating conditions, by which a unit may be chosen to fit its application. These values apply to all units of like nominal size and type (identification) produced by the same manufacturer. As used herein, the term ''published rating'' includes the rating of all performance characteristics shown on the unit or published in specifications, advertising or other literature controlled by the manufacturer, at stated rating conditions.

3.5 *Push/Pull Method*. The push/pull refrigerant recovery method is defined as the process of transferring liquid refrigerant from a refrigeration system to a receiving vessel by lowering the pressure in the vessel and raising the pressure in the system, and by connecting a separate line between the system liquid port and the receiving vessel.

3.6 *Recycle Flow Rate*. The amount of refrigerant processed divided by the time elapsed in the recycling mode. For equipment which uses a separate recycling sequence, the recycle rate does not include the recovery rate (or elapsed time). For equipment which does not use a separate recycling sequence, the recycle rate is a rate based solely on the higher of the liquid or vapor recovery rate, by which the contaminant levels were measured.

3.7 *Residual Trapped Refrigerant*. Refrigerant remaining in equipment after clearing.

3.8 *Shall*, *Should*, *Recommended* or *It Is Recommended* shall be interpreted as follows:

3.8.1 *Shall*. Where ''shall'' or ''shall not'' is used for a provision specified, that provision

is mandatory if compliance with this appendix is claimed.

3.8.2 *Should, Recommended* or *It Is Recommended* is used to indicate provisions which are not mandatory but which are desirable as good practice.

3.9 Standard Contaminated Refrigerant Sample. A mixture of new or reclaimed refrigerant and specified quantities of identified contaminants which constitute the mixture to be processed by the equipment under test. These contaminant levels are expected only from severe service conditions.

3.10 *Trapped Refrigerant*. The amount of refrigerant remaining in the equipment after the recovery or recovery/recycling operation but before clearing.

3.11 *Vapor Recovery Rate*. The average rate that refrigerant is withdrawn from the mixing chamber between two pressures as vapor recovery rate is changing pressure and temperature starting at saturated conditions either 24 °C or at the boiling point 100 kPa (abs), whichever is higher. The final pressure condition is 10% of the initial pressure, but not lower than the equipment final recovery vacuum and not higher than 100 kPa (abs).

Section 4. General Equipment Requirements

4.1 *Equipment Information*. The equipment manufacturer shall provide operating instructions, necessary maintenance procedures and source information for replacement parts and repair.

4.2 *Filter Replacement*. The equipment shall indicate when any filter/drier(s) needs replacement. This requirement can be met by use of a moisture transducer and indicator light, by use of a sight glass/moisture indicator or by some measurement of the amount of refrigerant processed such as a flow meter or hour meter. Written instructions such as ''to change the filter every 181 kg, or every 30 days'' shall not be acceptable except for equipment in large systems where the liquid recovery rate is greater than 11.3 kg/min where the filter/drier(s) would be changed for every job.

4.3 *Purge of Non-Condensable*. If non-condensables are purged, the equipment shall either automatically purge non-condensables or provide indicating means to guide the purge process.

4.4 *Purge Loss*. The total refrigerant loss due to purging non-condensables, draining oil and clearing refrigerant (*see* 9.5) shall be less than 3% (by weight) of total processed refrigerant.

4.5 *Permeation Rate*. High pressure hose assemblies ⅝ in. [16 mm] nominal and smaller shall not exceed a permeation rate of 3.9 g/cm^2/yr (internal surface) at a temperature of 48.8 °C. Hose assemblies that UL recognized as having passed ANSI/UL 1963 requirements shall be accepted without testing. See 7.1.4.

4.6 *Clearing Trapped Refrigerant*. For equipment rated for more than one refrigerant, the manufacturer shall provide a method and instructions which will accomplish connections and clearing within 15 minutes. Special equipment, other than a vacuum pump or manifold gauge set shall be furnished. The clearing procedure shall not rely upon the storage cylinder below saturated pressure conditions at ambient temperature.

4.7 *Temperature*. The equipment shall be evaluated at 24 °C with additional limited evaluation at 40 °C. Normal operating conditions range from 10 °C to 40 °C.

4.8 *Exemptions*. Equipment intended for recovery only shall be exempt from 4.2 and 4.3.

Section 5. Contaminated Refrigerants

5.1 *Sample Characteristics*. The standard contaminated refrigerant sample shall have the characteristics specified in Table 1, except as provided in 5.2.

5.2 *Recovery-Only Testing*. Recovery equipment not rated for any specific contaminant shall be tested with new or reclaimed refrigerant.

Section 6. Test Apparatus

6.1 *General Recommendations*. The recommended test apparatus is described in the following paragraphs. If alternate test apparatus are employed, the user shall be able to demonstrate that they produce results equivalent to the specified referee apparatus.

6.2 *Self-Contained Equipment Test Apparatus*. The apparatus, shown in Figure 1, shall consist of:

6.2.1 *Mixing Chamber*. A mixing chamber consisting of a tank with a conical-shaped bottom, a bottom port and piping for delivering refrigerant to the equipment, various ports and valves for adding refrigerant to the chamber and stirring means for mixing.

6.2.2 *Filling Storage Cylinder*. The storage cylinder to be filled by the refrigerant transferred shall be cleaned and at the pressure of the recovered refrigerant at the beginning of the test. It will not be filled over 80%, by volume.

6.2.3 *Vapor Feed*. Vapor refrigerant feed consisting of evaporator, control valves and piping to create a 3.0 °C superheat condition at an evaporating temperature of 21 °C ±2K.

6.2.4 *Alternative Vapor Feed*. An alternative method for vapor feed shall be to pass the refrigerant through a boiler and then through an automatic pressure regulating valve set at different saturation pressures, moving from saturated pressure at 24 °C to final pressure of recovery.

6.2.5 *Liquid Feed*. Liquid refrigerant feed consisting of control valves, sampling port and piping.

6.2.6 *Instrumentation*. Instrumentation capable of measuring weight, temperature, pressure and refrigerant loss, as required.

TABLE 1—STANDARD CONTAMINATED REFRIGERANT SAMPLES

	R11	R12	R13	R22	R113	R114	R123	R134a	R500	R502	R503
Moisture Content: ppm by Weight of Pure refrigerant	100	80	30	200	100	85	200	200	200	200	30
Particulate Content: ppm by Weight of Pure Refrigerant Characterized by [1]	80	80	NA	80	80	80	80	80	80	80	NA
Acid Content: ppm by Weight of Pure Refrigerant—(mg KOH per kg Refrigerant) Characterized by [2]	500	100	NA	500	400	200	500	100	100	100	NA
Mineral Oil Content: % by Weight of Pure Refrigerant	20	5	NA	5	20	20	20	5	5	5	NA
Viscosity (SUS)	300	150	.....	300	300	300	300	150 [3]	150	150	
Non-Condensable Gases (Air Content): % by Volume	NA	3	3	3	NA	3	NA	3	3	3	3

[1] Particulate content shall consist of inert materials and shall comply with particulate requirements in appendix B.
[2] Acid consists of 60% oleic acid and 40% hydrochloric acid on a total number basis.
[3] Synthetic ester-based oil.

Figure 1. Test Apparatus for Self-Contained Equipment

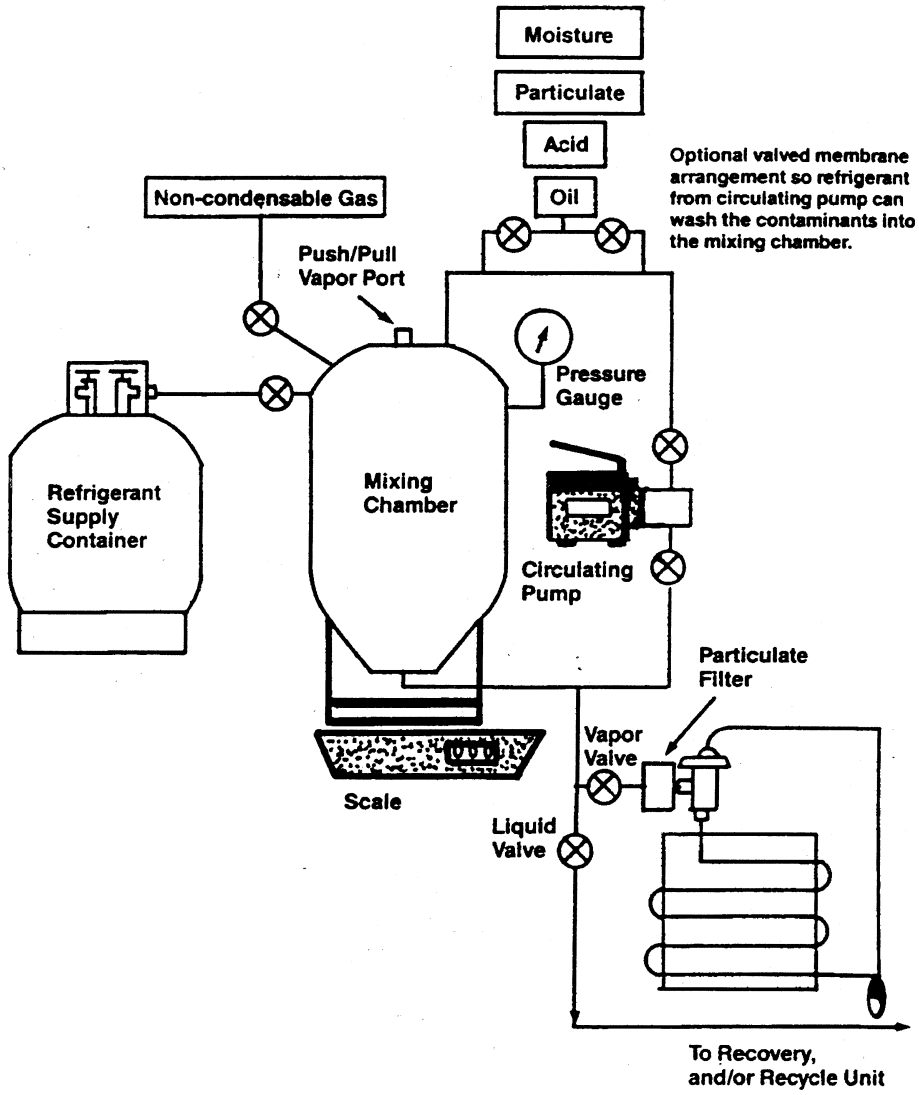

6.3 *Size.* The size of the mixing chamber shall be a minimum of .09 m^3. The bottom port and the refrigerant feed shall depend on the size of the equipment. Typically, the mixing valves and piping shall be 9.5 mm. For large equipment to be used on chillers, the minimum inside diameter of ports, valves and pipings shall be the smaller of the manufacturer's recommendation or 37 mm.

6.4 *System Dependent Equipment Test Apparatus.* This test apparatus is to be used for final recovery vacuum rating of all system dependent equipment.

6.4.1 *Test Setup*. The test apparatus shown in Figure 2 consists of a complete refrigeration system. The manufacturer shall identify the refrigerants to be tested. The test apparatus can be modified to facilitate operation or testing of the system dependent equipment if the modifications to the apparatus are specifically described within the manufacturer's literature. (*See* Figure 2.) A 6.3 mm balance line shall be connected across the test apparatus between the high and low-pressure sides, with an isolation valve located at the connection to the compressor high side. A 6.3 mm access port with a valve core shall be located in the balance line for the purpose of measuring final recovery vacuum at the conclusion of the test.

Section 7. Performance Testing

7.1 *General Testing*.

7.1.1 *Temperatures*. Testing shall be conducted at an ambient temperature of 24 °C ±1K except high temperature vapor recovery shall be at 40 °C ±1K. The evaporator conditions of 6.2.3 shall be maintained as long as liquid refrigerant remains in the mixing chamber.

7.1.2 *Refrigerants*. The equipment shall be tested for all designated refrigerants (*see* 11.2). All tests in Section 7 shall be completed for each refrigerant before starting tests with the next refrigerant.

7.1.3 *Selected Tests*. Tests shall be as appropriate for the equipment type and ratings parameters selected (*see* 9.9, 11.1 and 11.2).

7.1.4 *Hose Assemblies*. For the purpose of limiting refrigerant emissions to the atmosphere, hose assemblies shall be tested for permeation according to ANSI/UL Standard 1963, Section 40.10.

7.2 *Equipment Preparation and Operation*. The equipment shall be prepared and operated per the operating instructions.

7.3 *Test Batch*. The test batch consisting of refrigerant sample (*see* Section 5) of the test refrigerant shall be prepared and thoroughly mixed. Continued mixing or stirring shall be required during the test while liquid refrigerant remains in the mixing chamber. The mixing chamber shall be filled to 80% level by volume.

7.3.1 *Control Test Batch*. Prior to starting the test for the first batch for each refrigerant, a liquid sample will be drawn from the mixing chamber and analyzed per Section 8 to assure that contaminant levels match Table 1 within ±10 ppm for moisture, ±20 ppm for particulate, ±20 ppm for oleic acid and ±0.5% for oil.

7.4 *Recovery Tests (Recovery and Recovery/Recycle Equipment)*.

7.4.1 *Determining Recovery Rates*. The liquid and vapor refrigerant recovery rates shall be measured during the first test batch for each refrigerant (*see* 9.1, 9.2 and 9.4). Equipment preparation and recovery cylinder changeover shall not be included in elapsed time measurements for determining vapor recovery rate and liquid refrigerant recovery rate. Operations such as subcooling the recovery cylinder shall be included. Recovery cylinder shall be the same size as normally furnished or specified in the instructions by the equipment manufacturer. Oversized tanks shall not be permitted.

7.4.1.1 *Liquid Refrigerant Recovery Rate*. If elected, the recovery rate using the liquid refrigerant feed means (*see* 6.2.5) shall be determined. After the equipment reaches stabilized conditions of condensing temperature and/or recovery cylinder pressure, the recovery process shall be stopped and an initial weight shall be taken of the mixing chamber (*see* 9.2). The recovery process shall be continued for a period of time sufficient to achieve the accuracy in 9.4. The recovery process shall be stopped and a final weight shall be taken of the mixing chamber.

Configuration of standard air conditioning or refrigeration system for use as a test apparatus

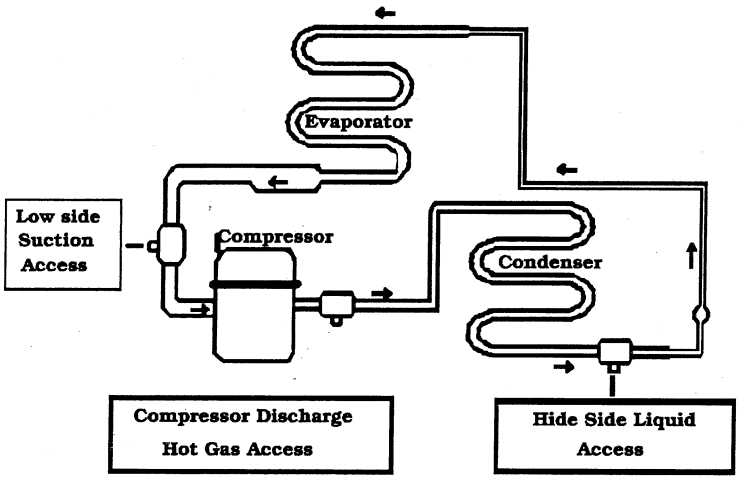

Figure 2. System Dependent Equipment Test Apparatus

7.4.1.2 *Vapor Refrigerant Recovery Rate.* If elected, the average vapor flow rate shall be measured to accuracy requirements in clause 9.4 under conditions with no liquid refrigerant in the mixing chamber. The liquid recovery feed means shall be used. At initial conditions of saturated vapor at the higher of 24 °C or the boiling temperature (100 kPa absolute pressure), the weight of the mixing chamber and the pressure shall be recorded. At final conditions representing pressure in the mixing chamber of 10% of the initial condition, but not less than the final recovery vacuum (*see* 9.6) nor more than 100 kPa, measure the weight of the mixing chamber and the elapsed time.

7.4.1.3 *High Temperature Vapor Recovery Rate.* Applicable for equipment having at least one designated refrigerant (*see* 11.2) with a boiling point between −50 °C and +10 °C. Measure the rate for R–22, or the refrigerant with the lowest boiling point if R–22 is not a designated refrigerant. Repeat the test in 7.4.1.2 at saturated conditions at 40 °C and continue to operate equipment to assure it will achieve the final recovery vacuum (*see* 7.4.3).

7.4.2 *Recovery Operation.* This test is for determining the final recovery vacuum and the ability to remove contaminants as appropriate. If equipment is rated for liquid recovery (*see* 7.4.1.3), liquid recovery feed means described in 6.2.5 shall be used. If not, vapor recovery means described in 6.2.3 or 6.2.4 shall be used. Continue recovery operation until all liquid is removed from the test apparatus and vapor is removed to the point where equipment shuts down by automatic means or is manually shut off per operating instructions.

7.4.2.1 *Oil Draining.* Capture oil from the equipment at intervals as required in the instructions. Record the weight of the container. Completely remove refrigerant from oil by evacuation or other appropriate means. The weight difference shall be used in 9.5.2.

7.4.3 *Final Recovery Vacuum.* At the end of the first test batch for each refrigerant, the liquid valve and vapor valve of the apparatus shall be closed. After waiting 1 minute, the mixing chamber pressure shall be recorded (*see* 9.6).

7.4.4 *Residual Refrigerant.* This test will measure the mass of remaining refrigerant in the equipment after clearing and therefore the potential for mixing refrigerants (*see* 4.6).

7.4.4.1 *Initial Conditions*. At the end of the last test for each batch for each refrigerant, the equipment shall be disconnected from the test apparatus (Figure 1). Recycle per 7.5, if appropriate. Perform refrigerant clearing operations as called for in the instruction manual. Capture and record the weight of any refrigerant which would have been emitted to the atmosphere during the clearing process for use in 9.5. If two loops are used for recycling, trapped refrigerant shall be measured for both.

7.4.4.2 *Residual Trapped Refrigerant*. Evacuate an empty test cylinder to 1.0 kPa absolute. Record the empty weight of the test cylinder. Open all valves to the equipment so as to provide access to all trapped refrigerant. Connect the equipment to the test cylinder and operate valves to recover the residual refrigerant. Record the weight of the test cylinder using a recovery cylinder pressure no less than specified in 6.2.2. Place the test cylinder in liquid nitrogen for a period of 30 minutes or until a vacuum of 1000 microns is reached, whichever occurs first.

7.5 *Recycling Tests (Recovery/Recycle Equipment)*.

7.5.1 *Recycling Operation*. As each recovery cylinder is filled in 7.4.2, recycle according to operating instructions. There will not necessarily be a separate recycling sequence. Note non-condensable purge measurement in 9.5.

7.5.1.1 *Recycle Flow Rate*. While recycling the first recovery cylinder for each refrigerant, determine the recycling flow rate by appropriate means (*see* 9.3) to achieve the accuracy required in 9.4.

7.5.2 *Non-Condensable Sample*. After completing 7.4.3, prepare a second test batch (7.3). Recover per 7.4.2 until the current recovery cylinder is filled to 80% level by volume. Recycle per 7.5.1. Mark this cylinder and set aside for taking the vapor sample. For equipment having both an internal tank of at least 3 kg refrigerant capacity and an external recovery cylinder, two recovery cylinders shall be marked and set aside. The first is the cylinder described above. The second cylinder is the final recovery cylinder after filling it to 80% level by volume and recycling.

7.5.3 *Liquid Sample for Analysis*. Repeat steps 7.3, 7.4.2 and 7.5.1 with further test batches until indication means in 4.2 show the filter/drier(s) need replacing.

7.5.3.1 *Multiple Pass*. For equipment with a separate recycling circuit (multiple pass), set aside the current cylinder and draw the liquid sample (*see* 7.4) from the previous cylinder.

7.5.3.2 *Single Pass*. For equipment with the single pass recycling circuit, draw the liquid sample (*see* 7.4) from the current cylinder.

7.6 *Measuring Refrigerant Loss*. Refrigerant loss due to non-condensables shall be determined by appropriate means (*see* 9.5.1). The loss could occur in 7.4.1, 7.4.2 and 7.5.1.

Section 8. Sampling and Chemical Analysis Methods

8.1 *Chemical Analysis*. Chemical analysis methods shall be specified in appropriate standards such as ARI 700–95 and Appendix C to ARI Standard 700–95.

8.2 *Refrigerant Sampling*.

8.2.1 *Water Content*. The water content in refrigerant shall be measured by the Karl Fischer Analytical Method or by the Karl Fischer Coulometric techniques. Report the moisture level in parts per million by weight.

8.2.2 *Chloride Ions*. Chloride ions shall be measured by turbidity tests. At this time, quantitative results have not been defined. Report chloride content as ''pass'' or ''fail.'' In the future, when quantitative results are possible, report chloride content as parts per million by weight.

8.2.3 *Acidity*. The acidity test uses the titration principle. Report the acidity in parts per million by weight (mg KOH/kg) of sample.

8.2.4 *High Boiling Residue*. High boiling residues shall use measurement of the volume of residue after evaporating a standard volume of refrigerant. Using weight measurement and converting to volumetric units is acceptable. Report high boiling residues as percent by volume.

8.2.5 *Particulates/Solids*. The particulates/solids measurement employs visual examination. Report results as ''pass'' or ''fail.''

8.2.6 *Non-condensables*. The level of contamination by non-condensable gases in the base refrigerant being recycled shall be determined by gas chromatography. Report results as percent by volume.

Section 9. Performance Calculation and Rating

9.1 *Vapor Refrigerant Recovery Rate*. This rate shall be measured by weight change of the mixing chamber divided by elapsed time (*see* 7.4.1.2). The units shall be kg/min and the accuracy shall be per 9.4.

9.1.1 *High Temperature Vapor Recovery Rate*.

9.2 *Liquid Refrigerant Recovery Rate*. This rate shall be measured by weight change of the mixing chamber divided by elapsed time (*see* 7.4.1.3). The units shall be kg/min and the accuracy shall be per 9.4.

9.3 *Recycle Flow Rate*. The recycle flow rate shall be as defined in 3.10, expressed in kg/min, and the accuracy shall be per 9.4.

9.3.1 For equipment using multi-pass recycling or a separate sequence, the recycle rate shall be determined by dividing the net weight W of the refrigerant to be recycled by the actual time T required to recycle. Any set-up or operator interruptions shall not be included in the time T.

9.3.2 If no separate recycling sequence is used, the recycle rate shall be the higher of the vapor refrigerant recovery rate or the liquid refrigerant recovery rate. The recycle rate shall match a process which leads to contaminant levels in 9.9. Specifically, a recovery rate determined from bypassing a contaminant removal device cannot be used as a recycle rate when the contaminant levels in 9.9 are determined by passing the refrigerant through the contaminant removal device.

9.4 *Accuracy of Flow Rates*. The accuracy of test measurements in 9.1, 9.2 and 9.3 shall be ±008 kg/min or flow rates up to .42 kg/min and ±2.0% for flow rates larger than .42 kg/min. Ratings shall be expressed to the nearest .02 kg/min.

9.5 *Refrigerant Loss*. This calculation will be based upon the net loss of refrigerant which would have been eliminated in the non-condensable purge process (*see* 7.5.1), the oil draining process (*see* 7.4.2.1) and the refrigerant clearing process (*see* 7.4.4.1), all divided by the net refrigerant content of the test batches. The refrigerant loss shall not exceed 3% by weight.

9.5.1 *Non-Condensable Purge*. Evacuate an empty container to 2 kPa absolute. Record the empty weight of the container. Place the container in a dry ice bath. Connect the equipment purge connection to the container and operate purge according to operating instructions so as to capture the non-condensables and lost refrigerant. Weigh the cylinder after the recycling is complete. Equivalent means are permissible.

9.5.2 *Oil Draining*. Refrigerant removed from the oil after draining shall be collected and measured in accordance with 7.4.2.1.

9.5.3 *Clearing Unit*. Refrigerant captured during the clearing process shall be measured in accordance with 7.4.4.1.

9.6 *Final Recovery Vacuum*. The final recovery vacuum shall be the mixing chamber pressure in 7.4.3 expressed in kPa. The accuracy of the measurement shall be within 0.33 kPa.

9.7 *Residual Trapped Refrigerant*. The amount of residual trapped refrigerant shall be the final weight minus the initial weight of the test cylinder in 7.4.4.2, expressed in kg. The accuracy shall be ±0.02 kg and reported to the nearest 0.05 kg.

9.8 *Quantity Recycled*. The amount of refrigerant processed before changing filters (*see* 7.5.3) shall be expressed in kg to an accuracy of ±1%.

9.9 *Contaminant Levels*. The contaminant levels remaining after testing shall be published as follows:

Moisture content, ppm by weight
Chloride ions, pass/fail
Acidity, ppm by weight
High boiling residue, % (by volume)
Particulates-solid, pass/fail (visual examination)
Non-condensables, % (by volume)

9.10 *Minimum Data Requirements for Published Ratings*. Published ratings shall include all of the parameters as shown in Tables 2 and 3 for each refrigerant designated by the manufacturer.

Section 10. Tolerances

10.1 *Tolerances*. Performance related parameters shall not be less favorable than the published ratings.

Section 11. Marking and Nameplate Data

11.1 *Marking and Nameplate Data*. The nameplate shall display the manufacturer's name, model designation, type of equipment, designated refrigerants, capacities and electrical characteristics where applicable. The nameplate shall also conform to the labeling requirements established for certified recycling and recovery equipment established at 40 CFR 82.158(h).

Recommended nameplate voltages for 60 Hertz systems shall include one or more of the utilization voltages shown in Table 1 of ARI Standard 110–90. Recommended nameplate voltages for 50 Hertz systems shall include one or more of the utilization voltages shown in Table 1 of IEC Standard Publication 38, IEC Standard Voltages.

11.2 *Data for Designated Refrigerants*. For each refrigerant designated, the manufacturer shall include all the following that are applicable per Table 2:

a. Liquid Recovery Rate
b. Vapor Recovery Rate
c. High Temperature Vapor Recovery Rate
d. Final Recovery Vacuum
e. Recycle Flow Rate
f. Residual Trapped Refrigerant
g. Quantity Recycled

TABLE 2—PERFORMANCE

Parameter/Type of equipment	Recovery	Recovery/Recycle	Recycle	System dependent equipment
Liquid Refrigerant Recovery Rate	(1)	(1)	N/A	N/A
Vapor Refrigerant Recovery Rate	(1)	(1)	N/A	N/A
High Temp. Vapor Recovery Rate	(1)	(1)	N/A	N/A
Final Recovery Vacuum	(X)	(X)	N/A	(X)
Recycle Flow Rate	N/A	(X)	(X)	N/A
Refrigerant Loss	(3)	(X)	(X)	(3)

TABLE 2—PERFORMANCE—Continued

Parameter/Type of equipment	Recovery	Recovery/ Recycle	Recycle	System dependent equipment
Residual Trapped Refrigerant	(2)	(2)	(2)	(2)
Quantity Recycled	N/A	(X)	(X)	N/A

X Mandatory rating.
1 For a recovery or recovery/recycle unit, one must rate either liquid refrigerant recovery rate or vapor refrigerant recovery rate or one can rate for both. If rating only the one, the other shall be indicated by N/A, "not applicable."
2 Mandatory rating for equipment tested for multiple refrigerants.
3 Mandatory rating if multiple refrigerants, oil separation or non-condensable purge are rated.
NOTE: For recovery equipment, these parameters are optional. If not rated use N/A, "not applicable."

TABLE 3—CONTAMINANTS

Contaminant/Type of equipment	Recovery	Recovery/ Recycle	Recycle	System dependent equipment
Moisture Content	(*)	(X)	(X)	N/A
Chloride Ions	(*)	(X)	(X)	N/A
Acidity	(*)	(X)	(X)	N/A
High Boiling Residue	(*)	(X)	(X)	N/A
Particulates	(*)	(X)	(X)	N/A
Non-Condensables	(*)	(X)	(X)	N/A

* For recovery equipment, these parameters are optional. If not rated, use N/A, "not applicable."
X Mandatory rating.

ATTACHMENT 1 TO APPENDIX B2 TO SUBPART F OF PART 82—REFERENCES

Listed here are all standards, handbooks, and other publications essential to the formation and implementation of the standard. All references in this appendix are considered as part of this standard.

• ANSI/UL Standard 1963, *Refrigerant Recovery/Recycling Equipment,* First Edition, 1989, American National Standards Institute/ Underwriters Laboratories, Inc.

• ARI Standard 110–90, *Air-Conditioning and Refrigerating Equipment Nameplate Voltages,* Air-Conditioning and Refrigeration Institute

• ARI Standard 700–95, *Specifications for Fluorocarbon and Other Refrigerants,* Air-Conditioning and Refrigeration Institute

• ASHRAE Terminology of Heating, Ventilation, Air Conditioning, Refrigeration, & Refrigeration, American Society of Heating, Refrigerating, and Air-Conditioning Engineers, Inc., 1991

• IEC Standard Publication 38, *IEC Standard Voltages,* International Electrotechnical Commission, 1983

ATTACHMENT 2 TO APPENDIX B2 TO SUBPART F OF PART 82-PARTICULATE USED IN STANDARD CONTAMINATED REFRIGERANT SAMPLE

1. Particulate Specification

B1.1 The particulate material (pm) will be a blend of 50% coarse air cleaner dust as received, and 50% retained on a 200-mesh screen. The coarse air cleaner dust is available from: AC Spark Plug Division; General Motors Corporation; Flint, Michigan.

B1.2 *Preparation of Particulate Materials.*

To prepare the blend of contaminant, first wet screen a quantity of coarse air cleaner dust on a 200-mesh screen (particle retention 74 pm). This is done by placing a portion of the dust on a 200-mesh screen and running water through the screen while stirring the dust with the fingers. The fine contaminant particles passing through the screen are discarded. The +200-mesh particles collected on the screen are removed and dried for one hour at 110 °C. The blend of standard contaminant is prepared by mixing 50% by weight of coarse air cleaner dust as received (after drying for one hour at 110 °C) with 50% by weight of the +200 mesh screened dust.

B1.3 *Particle Size Analysis.*

The coarse air cleaner dust as received and the blend used as the standard contaminant have the following approximate particle size analysis:

Wt. % in various size ranges, pm.

Size range	As received	Blend
0–5	12	6
5–10	12	6
10–20	14	7
20–40	23	11
40–80	30	32
80–200	9	38

[68 FR 43815, July 24, 2003; 68 FR 54678, Sept. 18, 2003]

APPENDIX B3 TO SUBPART F OF PART 82—PERFORMANCE OF REFRIGERANT RECOVERY, RECYCLING, AND/OR RECLAIM EQUIPMENT

This appendix is based on the Air-Conditioning, Heating, and Refrigeration Institute Standard 740–2016, *Performance Rating of Refrigerant Recovery Equipment and Recovery/Recycling Equipment*.

SECTION 1. PURPOSE

1.1 The purpose of this standard is to establish methods of testing for rating and evaluating the performance of refrigerant recovery, and/or recycling equipment and general equipment requirements (herein referred to as ''equipment'') for contaminant or purity levels, capacity, speed and purge loss to minimize emission into the atmosphere of designated refrigerants.

SECTION 2. SCOPE

2.1 This standard applies to equipment for recovering and/or recycling single refrigerants, azeotropes, zeotropic blends, and their normal contaminants from refrigerant systems. This standard defines the test apparatus, test gas mixtures, sampling procedures and analytical techniques that will be used to determine the performance of refrigerant recovery and/or recycling equipment (hereinafter, ''equipment''). Appendix B4 of this subpart establishes standards for recovery/recycling equipment used with flammable refrigerants.

SECTION 3. DEFINITIONS

3.1 *Definitions*. All terms in this appendix will follow the definitions in §82.152 unless otherwise defined in this appendix.

3.2 *Clearing Refrigerant*. Procedures used to remove trapped refrigerant(s) from equipment before switching from one refrigerant to another.

3.3 *High Temperature Vapor Recovery Rate*. For equipment having at least one designated refrigerant (see Section 11.2 of this appendix) with a boiling point in the range of −50 to +10 °C, the rate will be measured for R–22, or the lowest boiling point refrigerant if R–22 is not a designated refrigerant.

3.4 *Published Ratings*. A statement of the assigned values of those performance characteristics, under stated rating conditions, by which a unit may be chosen to fit its application. These values apply to all units of like nominal size and type (identification) produced by the same manufacturer. As used herein, the term ''published rating'' includes the rating of all performance characteristics shown on the unit or published in specifications, advertising, or other literature controlled by the manufacturer, at stated rating conditions.

3.5 *Push/Pull Liquid Recovery*. The push/pull refrigerant recovery method is defined as the process of transferring liquid refrigerant from a refrigeration system to a receiving vessel by lowering the pressure in the vessel and raising the pressure in the system, and by connecting a separate line between the system liquid port and the receiving vessel.

3.6 *Recycle Flow Rate*. The amount of refrigerant processed divided by the time elapsed in the recycling mode. For equipment which uses a separate recycling sequence, the recycle rate does not include the recovery rate (or elapsed time). For equipment which does not use a separate recycling sequence, the recycle rate is a rate based solely on the higher of the liquid or vapor recovery rate, by which the contaminant levels were measured.

3.7 *Residual Trapped Refrigerant*. Refrigerant remaining in equipment after clearing refrigerant.

3.8 *Shall*, *Should*, *Recommended* or *It Is Recommended* shall be interpreted as follows:

3.8.1 *Shall*. Where ''shall'' or ''shall not'' is used for a provision specified, that provision is mandatory if compliance with this appendix is claimed.

3.8.2 *Should*, *Recommended* or *It Is Recommended* is used to indicate provisions which are not mandatory but which are desirable as good practice.

3.9 *Standard Contaminated Refrigerant Sample*. A mixture of new or reclaimed refrigerant and specified quantities of identified contaminants which constitute the mixture to be processed by the equipment under test. These contaminant levels are expected only from severe service conditions.

3.10 *Trapped Refrigerant*. The amount of refrigerant remaining in the equipment after the recovery or recovery/recycling operation but before clearing refrigerant.

3.11 *Vapor Recovery Rate*. The average rate that refrigerant is withdrawn from the mixing chamber between two pressures as vapor recovery rate is changing depending on the pressure. The initial condition is vapor only at saturation pressure and temperature at either 24 °C or at the boiling point at 100 kPa, whichever is higher. The final pressure condition is 10 percent of the initial pressure, but not lower than the equipment final recovery vacuum and not higher than 100 kPa.

SECTION 4. GENERAL EQUIPMENT REQUIREMENTS

4.1 *Equipment Information*. The equipment manufacturer shall provide operating instructions, necessary maintenance procedures, and source information for replacement parts and repair.

4.2 *Filter Replacement*. The equipment shall indicate when any filter/drier(s) needs replacement. This requirement can be met

by use of a moisture transducer and indicator light, by use of a sight glass/moisture indicator, or by some measurement of the amount of refrigerant processed such as a flow meter or hour meter. The equipment manufacturer must provide maximum quantity recycled or filter change interval in its written instructions.

4.3 *Purge of Non-Condensable*. If non-condensables are purged, the equipment shall either automatically purge non-condensables or provide an indicating means to guide the purge process. Recycling equipment must provide purge means.

4.4 *Purge Loss*. The total refrigerant loss due to purging non-condensables, draining oil, and clearing refrigerant (see Section 9.5) shall be less than 3 percent (by weight) of total processed refrigerant.

4.5 *Permeation Rate*. High pressure hose assemblies ⅝ in. (16 mm) nominal and smaller shall not exceed a permeation rate of 3.9 g/cm^2/yr (internal surface) at a temperature of 48.8 °C. Hose assemblies that UL recognized as having passed UL 1963, 2011 requirements shall be accepted without testing. See Section 7.1.4 of this appendix.

4.6 *Clearing Trapped Refrigerant*. For equipment rated for more than one refrigerant, the manufacturer shall provide a method and instructions which will accomplish connections and clearing within 15 minutes. Special equipment, other than a vacuum pump or manifold gauge set, shall be furnished. The clearing procedure shall not rely upon the storage cylinder below saturated pressure conditions at ambient temperature.

4.7 *Temperature*. The equipment shall be evaluated at 24 °C with additional limited evaluation at 40 °C. Normal operating conditions range from 10 °C to 40 °C.

4.8 *Exemptions*. Equipment intended for recovery only shall be exempt from Sections 4.2 and 4.3.

SECTION 5. CONTAMINATED REFRIGERANTS

5.1 *Sample Characteristics*. The standard contaminated refrigerant sample shall have the characteristics specified in Table 1, except as provided in Section 5.2 of this appendix. Testing shall be conducted at an ambient temperature of 24 °C ± 1 °C except high temperature vapor recovery shall be 40 °C ± 1 °C.

5.2 *Recovery-only Testing*. Recovery equipment not rated for removal of contaminants shall be tested with new or reclaimed refrigerant.

Table 1– Standard Contaminated Refrigerant Samples

	R-11	R-12	R-13	R-22	R-23	R-113	R-114	R-123	R-124	R-134a	R-500	R-502	R-503	R-401A	R-401B	R-402A
Moisture Content: ppm by Weight of Pure Refrigerant	100	80	30	200	30	100	85	200	200	200	200	200	30	200	200	200
Particulate Content: ppm by Weight of Pure Refrigerant[1]	80	80	N/A	80	N/A	80	80	80	80	80	80	80	N/A	80	80	80
Acid Content: ppm by Weight of Pure Refrigerant[2]	100	200	N/A	100	N/A	100	100	100	100	100	200	100	N/A	100	100	100
Oil (HBR) Content: % by Weight of Pure Refrigerant	20	5	N/A	5	N/A	20	20	20	5	5	5	5	N/A	5	5	5
Viscosity/Type[3]	300/MO	150/MO	N/A	300/MO	N/A	300/MO	300/MO	300/MO	150/MO	150/MO	150/MO	150/MO	N/A	150/AB	150/AB	150/AB
Non-Condensable Gases (Air Content): % by Volume	N/A	3	3	3	3	N/A	3	N/A	3	3	3	3	3	3	3	3

Table 1 (continued) – Standard Contaminated Refrigerant Samples

	R-402B	R-404A	R-406A	R-407A	R-407B	R-407C	R-407D	R-408A	R-409A	R-410A	R-410B	R-411A	R-411B	R-417C	R-419B	R-422E	R-445A	R-507	R-508A	R-508B
Moisture Content: ppm by Weight of Pure Refrigerant	200	200	200	200	200	200	200	200	200	200	200	200	200	200	200	200	200	200	20	20
Particulate Content: ppm by Weight of Pure Refrigerant[1]	80	80	80	80	80	80	80	80	80	80	80	80	80	80	80	80	80	80	NA	NA
Acid Content: ppm by Weight of Pure Refrigerant [2]	100	100	200	100	100	100	100	100	100	100	100	100	100	100	100	100	100	100	NA	NA
Oil (HBR) Content: % by Weight of Pure Refrigerant	5	5	5	5	5	5	5	5	5	5	5	5	5	5	5	5	5	5	NA	NA
Viscosity/Type[3]	150/AB	150/POE	150/AB	150/POE	150/POE	150/POE	150/POE	150/MO	150/MO	150/POE	150/POE	150/MO	150/MO	150/POE	150/POE	150/POE	150/POE	150/POE	NA	NA
Non-Condensable Gases (Air Content): % by Volume	3	3	3	3	3	3	3	3	3	3	3	3	3	3	3	3	3	3	3	3

[1] Particulate content shall consist of inert materials and shall comply with particulate requirements in Appendix B.
[2] Acid consists of 60% oleic acid and 40% hydrochloric acid on a total number basis.
[3] POE = Polyoester, AB = Alkylbenzene, MO = Mineral Oil.
[4] N/A means not applicable.

SECTION 6. TEST APPARATUS

6.1 *General Recommendations.* The recommended test apparatus is described in the following paragraphs. If alternate test apparatus are employed, the user shall be able to demonstrate that they produce results equivalent to the specified reference apparatus.

6.2 *Self-Contained Equipment Test Apparatus*. The apparatus, shown in Figure 1, shall consist of:

6.2.1 *Mixing Chamber*. A mixing chamber consisting of a tank with a conical-shaped bottom, a bottom port and piping for delivering refrigerant to the equipment, various ports and valves for adding refrigerant to the chamber, and stirring means for mixing.

6.2.2 *Filling Storage Cylinder*. The storage cylinder to be filled by the refrigerant transferred shall be cleaned and at the pressure of the recovered refrigerant at the beginning of the test. It will not be filled over 80 percent, by volume.

6.2.3 *Vapor Feed*. Vapor refrigerant feed consisting of evaporator, control valves and piping to create a 3.0 °C superheat condition at an evaporating temperature of 21 °C ± 2 °C.

6.2.4 *Alternative Vapor Feed*. An alternative method for vapor feed shall be to pass the refrigerant through a boiler and then through an automatic pressure regulating valve set at different saturation pressures, moving from saturated pressure at 24 °C to final pressure of recovery.

6.2.5 *Liquid Feed*. Liquid refrigerant feed consisting of control valves, sampling port, and piping.

6.2.6 *Instrumentation*. Instrumentation capable of measuring weight, temperature, pressure, and refrigerant loss, as required.

Figure 1. Test Apparatus for Self-Contained Equipment

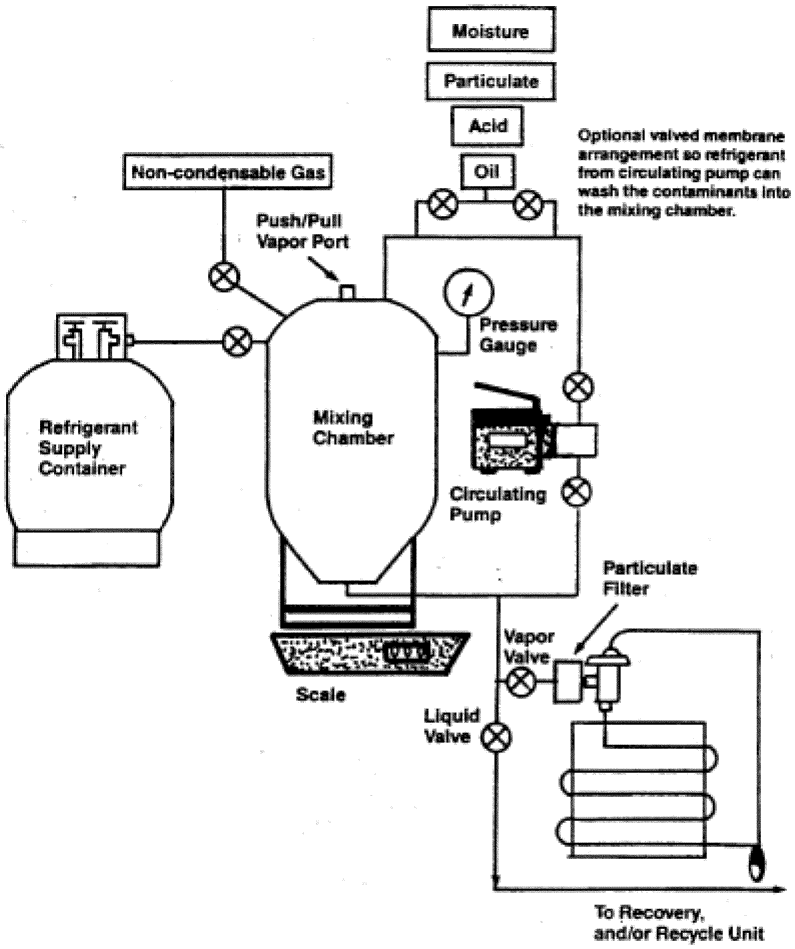

6.3 *Size*. The size of the mixing chamber and filling storage cylinder used during testing shall correspond to the size of the equipment being tested per Section 6.3.1 or 6.3.2:

6.3.1 For equipment utilizing nominal ¼″ or ⅜″ flare ports and hoses, the mixing chamber shall be 0.09 m^3 and all ports, valves, mixing valves, and piping shall be ½″ or larger, reduced down to the port size of the equipment by fittings at the connection ports of the mixing chamber. The filling storage cylinder used during testing shall be a nominal 50-pound water capacity DOT 4Bx cylinder with ¼″ flare liquid and vapor ports.

6.3.2 For equipment utilizing ½″ or larger flare ports and hoses, the mixing chamber shall be 0.45 m^3 (or nominal 1000-pound water capacity DOT 4Bx cylinder) and all ports, valves, mixing valves, and piping shall be 1½″ or larger, reduced down to the port size of the equipment by fittings at the connection ports of the mixing chamber. The filling storage cylinder used during testing shall be a nominal 1000-pound water capacity DOT 4Bx cylinder with liquid and vapor ports, valves and piping sized ¾″ NPT and reduced or increased to the port size of the equipment by fittings at the connection ports of the filling storage cylinder.

6.4 *System Dependent Equipment Test Apparatus.* This test apparatus is to be used for final recovery vacuum rating of all system dependent equipment.

6.4.1 *Test Setup.* The test apparatus shown in Figure 2 consists of a complete refrigeration system. The manufacturer shall identify the refrigerants to be tested. The test apparatus can be modified to facilitate operation or testing of the system dependent equipment if the modifications to the apparatus are specifically described within the manufacturer's literature. A 6.3 mm balance line shall be connected across the test apparatus between the high- and low-pressure sides, with an isolation valve located at the connection to the compressor high side. A 6.3 mm access port with a valve core shall be located in the balance line for the purpose of measuring final recovery vacuum at the conclusion of the test.

Figure 2. System Dependent Equipment Test Apparatus

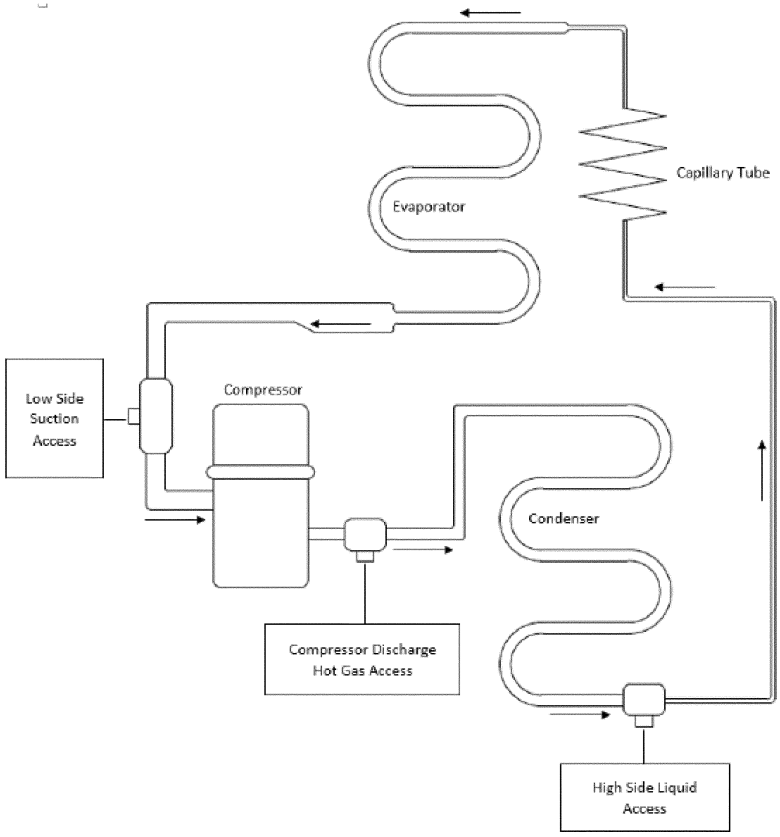

SECTION 7. PERFORMANCE TESTING PROCEDURES

7.1 *General Testing.*

7.1.1 *Temperatures.* Testing shall be conducted at an ambient temperature of 24 °C ± 1 °C except high temperature vapor recovery shall be at 40 °C ± 1 °C. The evaporator conditions of Section 6.2.3 shall be maintained as long as liquid refrigerant remains in the mixing chamber.

7.1.2 *Refrigerants.* The equipment shall be tested for all designated refrigerants (see Section 11.2). All tests in Section 7 shall be completed for each refrigerant before starting tests with the next refrigerant.

7.1.3 *Selected Tests.* Tests shall be as appropriate for the equipment type and ratings

parameters selected (see Sections 9.9, 11.1 and 11.2).

7.1.4 *Hose Assemblies*. For the purpose of limiting refrigerant emissions to the atmosphere, hose assemblies shall be tested for permeation according to UL Standard 1963 (incorporated by reference, see § 82.168).

7.2 *Equipment Preparation and Operation*. The equipment shall be prepared and operated per the operating instructions.

7.3 *Test Batch*. The test batch consisting of refrigerant sample (*see* Section 5) of the test refrigerant shall be prepared and thoroughly mixed. Continued mixing or stirring shall be required during the test while liquid refrigerant remains in the mixing chamber. The mixing chamber shall be filled to 80 percent level by volume.

7.3.1 *Control Test Batch*. Prior to starting the test for the first batch for each refrigerant, a liquid sample will be drawn from the mixing chamber and analyzed per Section 8 to assure that contaminant levels match Table 1 within ±10 ppm for moisture, ±20 ppm for oleic acid and ±0.5 percent for oil.

7.4 *Recovery Tests (Recovery and Recovery/Recycling Equipment)*

7.4.1 *Determining Recovery Rates*. The liquid and vapor refrigerant recovery rates shall be measured during the first test batch for each refrigerant (*see* Sections 9.1, 9.2 and 9.4). Equipment preparation and recovery cylinder changeover shall not be included in elapsed time measurements for determining vapor recovery rate and liquid refrigerant recovery rate. Operations such as subcooling the recovery cylinder shall be included. The recovery cylinder shall be the same size as per Section 6.3 or as furnished by the equipment manufacturer. Oversized tanks shall not be permitted.

7.4.1.1 *Liquid Refrigerant Recovery Rate*. If elected, the recovery rate using the liquid refrigerant feed means (*see* Section 6.2.5) shall be determined. After the equipment reaches stabilized conditions of condensing temperature and/or recovery cylinder pressure, the recovery process shall be stopped and an initial weight shall be taken of the mixing chamber (*see* Section 9.2). The recovery process shall be continued for a period of time sufficient to achieve the accuracy in Section 9.4. The recovery process shall be stopped and a final weight of the mixing chamber shall be taken.

7.4.1.2 *Vapor Refrigerant Recovery Rate*. If elected, the average vapor flow rate shall be measured to accuracy requirements in Section 9.4 under conditions with no liquid refrigerant in the mixing chamber. The liquid recovery feed means shall be used. At initial conditions of saturated vapor at the higher of 24 °C or the boiling temperature (100 kPa), the weight of the mixing chamber and the pressure shall be recorded. At final conditions representing pressure in the mixing chamber of 10 percent of the initial condition, but not less than the final recovery vacuum (*see* Section 9.6) nor more than 100 kPa, measure the weight of the mixing chamber and the elapsed time. At initial conditions, the recovery cylinder shall be at saturation pressure at ambient conditions.

7.4.1.3 *High Temperature Vapor Recovery Rate*. This is applicable for equipment having at least one designated refrigerant (*see* Section 11.2) with a boiling point between −50 °C and +10 °C. Measure the rate for R–22, or the refrigerant with the lowest boiling point if R–22 is not a designated refrigerant. Repeat the test in Section 7.4.1.2 at saturated conditions at 40 °C and continue to operate equipment to assure it will operate at this condition (see Section 7.4.3). At initial conditions, the recovery cylinder shall be at saturated pressure at 40 °C.

7.4.1.4 *Push/Pull Liquid Refrigerant Recovery Rate*. If elected, the average liquid push/pull flow rate shall be measured to accuracy requirements in Section 9.4. The mixing chamber and filling storage cylinder shall be filled with refrigerant vapor at initial conditions of saturated vapor at the higher of 24 °C or the boiling temperature at 100 kPa. An amount of liquid refrigerant shall be added to the mixing chamber equivalent to 80 percent by weight of the capacity of the filling storage cylinder. The pressure between the mixing chamber and filling storage cylinder shall be equalized and stabilized at initial conditions of saturated vapor at the higher of 24 °C or the boiling temperature at 100 kPa. The initial weight of the mixing chamber and the pressure shall be recorded. The equipment is then operated in push/pull liquid recovery mode and the weight change of the mixing chamber is recorded over time until all of the liquid has been transferred.

7.4.2 *Recovery Operation*. This test is for determining the final recovery vacuum and the ability to remove contaminants as appropriate. If equipment is rated for liquid recovery (*see* Section 7.4.1.3), liquid recovery feed means described in Section 6.2.5 shall be used. If not, vapor recovery means described in Sections 6.2.3 or 6.2.4 shall be used. Continue recovery operation until all liquid is removed from the test apparatus and vapor is removed to the point where equipment shuts down by automatic means or is manually shut off per operating instructions.

7.4.2.1 *Oil Draining*. Capture oil from the equipment at intervals as required in the instructions. Record the weight of the container. Completely remove refrigerant from oil by evacuation or other appropriate means. The weight difference shall be used in Section 7.5.2.

7.4.3 *Final Recovery Vacuum*. At the end of the first test batch for each refrigerant, the liquid valve and vapor valve of the apparatus shall be closed. After waiting 1 minute, the mixing chamber pressure shall be recorded (*see* Section 9.6).

7.4.4 *Residual Refrigerant*. This test will measure the mass of remaining refrigerant in the equipment after clearing and therefore the extent of mixing different refrigerants (*see* Section 9.6).

7.4.4.1 *Initial Conditions*. At the end of the last test for each batch for each refrigerant, the equipment shall be disconnected from the test apparatus (Figure 1). Recycle per Section 7.5, if appropriate. Perform refrigerant clearing operations as called for in the instruction manual. Capture and record the weight of any refrigerant which would have been emitted to the atmosphere during the clearing process for use in Section 9.5. If two loops are used for recycling, trapped refrigerant shall be measured for both.

7.4.4.2 *Residual Trapped Refrigerant*. Evacuate an empty test cylinder to 1.0 kPa. Record the empty weight of the test cylinder. Open all valves to the equipment so as to provide access to all trapped refrigerant. Connect the equipment to the test cylinder and operate valves to recover the residual refrigerant. Record the weight of the test cylinder using a recovery cylinder pressure no less than specified in Section 6.2.2. Place the test cylinder in liquid nitrogen for a period of 30 minutes or until a vacuum of 1000 microns is reached, whichever occurs first.

7.5 *Recycling Tests (Recovery/Recycling Equipment)*.

7.5.1 *Recycling Operation*. As each recovery cylinder is filled in Section 7.4.2, recycle according to operating instructions. There will not necessarily be a separate recycling sequence. Note non-condensable purge measurement in Section 9.5.

7.5.1.1 *Recycle Flow Rate*. While recycling the first recovery cylinder for each refrigerant, determine the recycling flow rate by appropriate means (*see* Section 9.3) to achieve the accuracy required in Section 9.4.

7.5.2 *Non-Condensable Sample*. After completing Section 7.4.3, prepare a second test batch (*see* Section 7.3). Recover per Section 7.4.2 until the current recovery cylinder is filled to 80 percent level by volume. Recycle per Section 7.5.1. Mark this cylinder and set aside for taking the vapor sample. For equipment having both an internal tank of at least 3 kg refrigerant capacity and an external recovery cylinder, two recovery cylinders shall be marked and set aside. The first is the cylinder described above. The second cylinder is the final recovery cylinder after filling it to 80 percent level by volume and recycling.

7.5.2.1 *Push/Pull Liquid Refrigerant Recovery Rate*. This rate shall be measured by weight change of the mixing chamber divided by elapsed time (*see* Section 7.4.1.4). The units shall be kg/min and the accuracy shall be per Section 9.4.

7.5.3 *Liquid Sample for Analysis*. Repeat steps in Sections 7.3, 7.4.2 and 7.5.1 with further test batches until indication means in Section 4.2 show the filter/drier(s) need replacing.

7.5.3.1 *Multiple Pass*. For equipment with a separate recycling circuit (multiple pass), set aside the current cylinder and draw the liquid sample (*see* Section 7.4) from the previous cylinder.

7.5.3.2 *Single Pass*. For equipment with the single pass recycling circuit, draw the liquid sample (*see* Section 7.4) from the current cylinder.

7.6 *Measuring Refrigerant Loss*. Refrigerant loss due to non-condensables shall be determined by appropriate means (*see* Section 9.5.1). The loss could occur in Sections 7.4.1, 7.4.2 and 7.5.1.

SECTION 8. SAMPLING AND CHEMICAL ANALYSIS METHODS

8.1 *Chemical Analysis*. Chemical analysis methods shall be specified in appropriate standards such as AHRI Standard 700, *2008 Appendix C for Analytical Procedures for AHRI Standard 700–2014- Normative*, and Addendum 700–1 to Appendix C. If alternate test methods are employed, the laboratory must be able to demonstrate that they produce results equivalent to the specified referee method.

8.2 *Refrigerant Sampling*.

8.2.1 *Moisture Content*. The water content in refrigerant shall be measured by the Karl Fischer Coulometric Titration technique. Report the moisture level in parts per million by weight.

8.2.2 *Chloride Ions*. Chloride ions shall be measured by turbidity tests. At this time, quantitative results have not been defined. Report chloride content as ''pass'' or ''fail.'' In the future, when quantitative results are possible, report chloride content as parts per million by weight.

8.2.3 *Acid Content*. The acidity test uses the titration principle. Report the acidity in parts per million by weight (mg KOH/kg) of sample.

8.2.4 *High Boiling Residue*. High boiling residues shall use measurement of the volume of residue after evaporating a standard volume of refrigerant. Using weight measurement and converting to volumetric units is acceptable. Report high boiling residues as percent by volume.

8.2.5 *Particulates/Solids*. The particulates/solids measurement employs visual examination. Report results as ''pass'' or ''fail.''

8.2.6 *Non-condensables*. The level of contamination by non-condensable gases in the base refrigerant being recycled shall be determined by gas chromatography. Report results as percent by volume.

SECTION 9. PERFORMANCE CALCULATIONS FOR RATINGS

9.1 *Vapor Refrigerant Recovery Rate*. This rate shall be measured by weight change of

the mixing chamber divided by elapsed time (*see* 7.4.1.2). The units shall be kg/min and the accuracy shall be per Section 9.4.

9.1.1 *High Temperature Vapor Recovery Rate*. This rate shall be measured by measured weight change of the mixing chamber divided by elapsed time (see Section 7.4.1.3). The units shall be kg/min and the accuracy shall be per Section 9.4.

9.2 *Liquid Refrigerant Recovery Rate*. This rate shall be measured by weight change of the mixing chamber divided by elapsed time (*see* 7.4.1.3). The units shall be kg/min and the accuracy shall be per Section 9.4.

9.3 *Recycle Flow Rate*. The recycle flow rate shall be as defined in Section 3.12, expressed in kg/min, and the accuracy shall be per Section 9.4.

9.3.1 For equipment using multi-pass recycling or a separate sequence, the recycle rate shall be determined by dividing the net weight, W, of the refrigerant to be recycled by the actual time T required to recycle. Any set-up or operator interruptions shall not be included in the time T.

9.3.2 If no separate recycling sequence is used, the recycle rate shall be the higher of the vapor refrigerant recovery rate or the liquid refrigerant recovery rate. The recycle rate shall match a process which leads to contaminant levels in Section 9.9. Specifically, a recovery rate determined from bypassing a contaminant removal device cannot be used as a recycle rate when the contaminant levels in Section 9.9 are determined by passing the refrigerant through the contaminant removal device.

9.4 *Accuracy of Flow Rates*. The accuracy of test measurements in Sections 9.1, 9.2 and 9.3 shall be ±008 kg/min for flow rates up to 0.42 kg/min and ±2.0 percent for flow rates larger than 0.42 kg/min. Ratings shall be expressed to the nearest 0.02 kg/min.

9.5 *Refrigerant Loss*. This calculation will be based upon the net loss of refrigerant which would have been eliminated in the non-condensable purge process (*see* Section 7.5.1), the oil draining process (*see* Section 7.4.2.1) and the refrigerant clearing process (*see* Section 7.4.4.1), all divided by the net refrigerant content of the test batches. The refrigerant loss shall not exceed 3 percent by weight.

9.5.1 *Non-Condensable Purge*. Evacuate an empty container to 2 kPa. Record the empty weight of the container. Place the container in a dry ice bath. Connect the equipment purge connection to the container and operate purge according to operating instructions so as to capture the non-condensables and lost refrigerant. Weigh the cylinder after the recycling is complete. Equivalent means are permissible.

For units which either recycle or publish (list) non-condensable removal, non-condensable gases are purged, operating the recycle device per the manufacturer's instructions through an evaporator pressure regulator (EPR) valve into a liquid nitrogen-chilled cylinder. This combination will simulate the atmosphere while allowing the capture of purge gases. The cylinder is weighed before and after the purge procedure.

9.5.2 *Oil Draining*. Refrigerant removed from the oil after draining shall be collected and measured in accordance with Section 7.4.2.1.

9.5.3 *Clearing Unit*. Refrigerant captured during the clearing process shall be measured in accordance with Section 7.4.4.1.

9.6 *Final Recovery Vacuum*. The final recovery vacuum shall be the mixing chamber pressure in Section 7.4.3 expressed in kPa at 24 °C. The accuracy of the measurement shall be within 0.33 kPa.

9.7 *Residual Trapped Refrigerant*. The amount of residual trapped refrigerant shall be the final weight minus the initial weight of the test cylinder in Section 7.4.4.2, expressed in kg. The accuracy shall be ±0.02 kg and reported to the nearest 0.05 kg.

9.8 *Refrigerant Processed*. The amount of refrigerant processed before changing filters (*see* Section 7.5.3) shall be expressed in kg to an accuracy of ±1 percent.

9.9 *Contaminant Levels*. The contaminant levels remaining after testing shall be published as follows:

Moisture content, ppm by weight
Chloride ions, pass/fail
Acid Content, ppm by weight
High boiling residue, percent (by volume)
Particulates/solids, pass/fail (visual examination)
Non-condensables, percent (by volume)

9.10 *Minimum Data Requirements for Published Ratings*. Published ratings shall include all of the parameters as shown in Tables 2 and 3 for each refrigerant designated by the manufacturer.

SECTION 10. TOLERANCES

10.1 *Tolerances*. Performance related parameters shall be equal to or better than the published ratings.

SECTION 11. MARKING AND NAMEPLATE DATA

11.1 *Marking and Nameplate Data*. The nameplate shall display the manufacturer's name, model designation, type of equipment (Recovery or Recovery/Recycling and Self-Contained or System Dependent), designated refrigerant(s), capacities, and electrical characteristics where applicable. The nameplate shall also conform to the labeling requirements established for certified recycling and recovery equipment established at 40 CFR 82.158(h).

Recommended nameplate voltages for 60 Hertz systems shall include one or more of the equipment nameplate voltages shown in Table 1 of AHRI 110–2016 (incorporated by

reference, see §82.168). Recommended nameplate voltages for 50 Hertz systems shall include one or more of the utilization voltages shown in Table 1 of IEC 60038 (English version) (incorporated by reference, see §82.168).

11.2 *Data for Designated Refrigerants*. For each refrigerant designated, the manufacturer shall include all the following that are applicable per Table 2:

a. Liquid Recovery Rate, kg/min
b. Vapor Recovery Rate, kg/min
c. High Temperature Vapor Recovery Rate, kg/min
d. Push/Pull Liquid Recovery Rate, kg/min
e. Final Recovery Vacuum Level, kPa
f. Recycle Flow Rate, kg/min
g. Refrigerant Loss, kg
h. Residual Trapped Refrigerant, kg
i. Quantity of Refrigerant Processed at Rated Conditions, kg

TABLE 2—PERFORMANCE RATINGS FOR REFRIGERANT RECOVERY AND RECOVERY/RECYCLING EQUIPMENT [4] [5]

Parameter	Type of equipment			
	Recovery	Recovery/recycling	Recycling	System dependent equipment
Liquid Refrigerant Recovery Rate, kg/min	X [1] [4]	X [1]	N/A [5]	N/A
Vapor Refrigerant Recovery Rate, kg/min	X [1]	X [1]	N/A	N/A
High Temperature Vapor Recovery Rate, kg/min	X [1]	X [1]	N/A	N/A
Push/Pull Liquid Recovery Rate, kg/min	X [1]	X [1]	N/A	N/A
Final Recovery Vacuum Level, kPa	X	X	N/A	X
Recycle Flow Rate, kg/min	N/A	X	X	N/A
Refrigerant Loss, kg	X [2]	X	X	X [3]
Residual Trapped Refrigerant, kg	X [3]	X [2]	X [2]	X [2]
Quantity of Refrigerant Processed at Rated Conditions, kg	N/A	X	X	N/A

[1] For a recovery or recovery/recycle unit, one must rate either liquid refrigerant recovery rate or vapor refrigerant recovery rate or one can rate for both. If rating only one, the other shall be indicated by N/A, "not applicable."
[2] Mandatory rating if multiple refrigerants, oil separation or non-condensable purge are rated.
[3] Mandatory rating for equipment tested for multiple refrigerants.
[4] "X" denotes mandatory rating or equipment requirements.
[5] "N/A" indicates "Not Applicable" for a parameter that does not have a rating.

TABLE 3—CONTAMINANT REMOVAL RATINGS FOR REFRIGERANT RECOVERY AND RECOVERY/RECYCLING EQUIPMENT [1] [2]

Contaminant	Type of equipment			
	Recovery	Recovery/recycling	Recycling	System dependent equipment
Moisture Content, ppm by weight	N/A [2]	X [1]	X	N/A
Chloride Ions, pass/fail	N/A	X	X	N/A
Acid Content, ppm by weight	N/A	X	X	N/A
High Boiling Residue, % by volume	N/A	X	X	N/A
Particulates/solids, pass/fail	N/A	X	X	N/A
Non-condensables, % by volume	N/A	X	X	N/A

[1] "X" denotes mandatory rating.
[2] "N/A" indicates "Not Applicable" for a parameter that does not have a rating.

SECTION 12. REFERENCES

Listed here are all standards, handbooks, and other publications essential to the formation and implementation of the standard. All references in this appendix are considered as part of this standard.

- UL 1963, *Standard for Safety Refrigerant Recovery/Recycling Equipment*, Fourth Edition (with revisions through October 13, 2013), dated June 1, 2011, (incorporated by reference, see §82.168).
- AHRI 110–2016, *2016 Standard for Air-Conditioning, Heating and Refrigerating Equipment Nameplate Voltages*, copyright 2016 (incorporated by reference, see §82.168).
- AHRI Standard 700–2015, *Specifications for Refrigerants*, Air-Conditioning, Heating, and Refrigeration Institute
- IEC 60038 *IEC Standard Voltages*, Edition 7.0, 2009–06 (English version) (incorporated by reference, see §82.168).

SECTION 13.0. PARTICULATE USED IN STANDARD CONTAMINATED REFRIGERANT SAMPLE

13.1 *Particulate Specification*

13.1.1 The particulate material (pm) will be a blend of 50 percent coarse air cleaner dust as received, and 50 percent retained on a 200-mesh screen. The coarse air cleaner

dust is available from: AC Spark Plug Division; General Motors Corporation; Flint, Michigan.

13.1.2 *Preparation of Particulate Materials.* To prepare the blend of contaminant per ANSI/ASHRAE Standard 63.2–1996 (RA 2010), first wet screen a quantity of coarse air cleaner dust on a 200-mesh screen (particle retention 74 μm). This is done by placing a portion of the dust on a 200-mesh screen and running water through the screen while stirring the dust with the fingers. The fine contaminant particles passing through the screen are discarded. The larger than 200-mesh particles collected on the screen are removed and dried for one hour at 110 °C. The blend of standard contaminant is prepared by mixing 50 percent by weight of coarse air cleaner dust as received (after drying for one hour at 110 °C) with 50 percent by weight of the larger than 200-mesh screened dust.

13.1.3 *Particle Size Analysis.* The coarse air cleaner dust as received and the blend used as the standard contaminant have the following approximate particle size analysis:

TABLE B1—WEIGHT PERCENTAGE IN VARIOUS μm SIZE RANGES FOR PARTICLE SIZE ANALYSIS

Size range (μm)	As received (wt %)	Blend (wt %)
0–5	12	6
5–10	12	6
10–20	14	7
20–40	23	11
40–80	30	32
80–200	9	38

[81 FR 82383, Nov. 18, 2016]

APPENDIX B4 TO SUBPART F OF PART 82—PERFORMANCE AND SAFETY OF FLAMMABLE REFRIGERANT RECOVERY AND/OR RECYCLING EQUIPMENT

This appendix is based on the Air-Conditioning, Heating, and Refrigeration Institute Standard 740–2016, *Performance Rating of Refrigerant Recovery Equipment and Recovery/Recycling Equipment*, and Underwriters Laboratories Standard 1963–2011 (Fourth Edition), *Standard for Safety: Refrigerant Recovery/Recycling Equipment*, including Supplement SB (added October 11, 2013), *Requirements for Refrigerant Recovery/Recycling Equipment Intended for Use with a Flammable Refrigerant*.

SECTION 1. PURPOSE

1.1 The purpose of this standard is to establish methods of testing for rating and evaluating the performance and safety of refrigerant recovery and/or recycling equipment and general equipment requirements (herein referred to as ''equipment'') for contaminant or purity levels, capacity, speed and purge loss to minimize emission into the atmosphere of designated refrigerants, as well as safety for use with flammable refrigerants.

SECTION 2. SCOPE

2.1 This standard applies to equipment for recovering and/or recycling flammable single refrigerants, azeotropes, zeotropic blends, and their normal contaminants from refrigerant systems. This standard defines the test apparatus, test gas mixtures, sampling procedures, analytical techniques, and equipment construction that will be used to determine the performance and safety of refrigerant recovery and/or recycling equipment (hereinafter, ''equipment'').

SECTION 3. DEFINITIONS

3.1 All terms in this appendix will follow the definitions in § 82.152 and Appendix B3 to Subpart F of Part 82 unless otherwise defined in this appendix.

3.2 All definitions used in UL 1963, including the definitions in Supplement SB, as applicable, are incorporated by reference, see § 82.168.

SECTION 4. EVALUATION OF PERFORMANCE

4.1 *Performance Ratings.* All recovery and/or recycling equipment to be tested under this appendix must follow the procedures and meet all requirements established in Appendix B3 to Subpart F of Part 82 to determine the performance ratings in addition to the safety evaluation conducted under the rest of this appendix.

4.2 *Safety.* All recovery and/or recycling equipment to be tested under this appendix must follow the procedures and meet all requirements in Supplement SB (added October 11, 2013), *Requirements for Refrigerant Recovery/Recycling Equipment Intended for Use with a Flammable Refrigerant* in Underwriters Laboratories Standard 1963–2011 (Fourth Edition), *Standard for Safety: Refrigerant Recovery/Recycling Equipment* (incorporated by reference, see § 82.168).

[81 FR 82390, Nov. 18, 2016]

APPENDIX C TO SUBPART F OF PART 82—METHOD FOR TESTING RECOVERY DEVICES FOR USE WITH SMALL APPLIANCES

Recovery Efficiency Test Procedure for Refrigerant Recovery Equipment Used on Small Appliances

The following test procedure is utilized to evaluate the efficiency of equipment designed to recover ozone depleting refrigerants (or any substitute refrigerant subject to the recycling rules promulgated pursuant to section 608 of the Clean Air Act Amendments of 1990) from small appliances when

service of those appliances requires entry into the sealed refrigeration system or when those appliances are destined for disposal. This procedure is designed to calculate on a weight or mass basis the percentage of a known charge of CFC-12 refrigerant removed and captured from a test stand refrigeration system. Captured refrigerant is that refrigerant delivered to a container suitable for shipment to a refrigerant reclaimer plus any refrigerant remaining in the recovery system in a manner that it will be transferred to a shipping container after additional recovery operations.

The test stand refrigeration system required for this procedure is constructed with standard equipment utilized in currently produced household refrigerator and freezer products. The procedure also accounts for compressor oils that might be added to or removed from the test stand compressor or any compressor used in the recovery system.

I. Test Stand

Test stands are constructed in accordance with the following standards.

1. Evaporator—5/16 in. outside dia. with 30 cu. in. volume.
2. Condenser—1/4 in. outside dia. with 20 cu. in volume.
3. Suction line capillary heat exchanger—appropriate for compressor used.
4. An 800–950 Btu/hr high side case (rotary) compressor; or (depending on the test senario);
5. An 800–9500 Btu/hr low side case (reciprocating) compressor.

A person seeking to have its recovery system certified shall specify the compressors by manufacturer and model that are to be used in test stands constructed for evaluation of its equipment, and the type and quantity of compressor to be used in those compressors. Only a compressor oil approved for use by the compressor's manufacturer may be specified, and the quantity of compressor oil specified shall be an appropriate quantity for the type of oil and compressor to be used. In order to reduce the cost of testing, the person seeking certification of its recovery system may supply an EPA approved third party testing laboratory with test stands meeting these standards for use in evaluating its recovery system.

II. Test Conditions

Tests are to be conducted at 75 degrees F, plus or minus 2 degrees F (23.9 C ±1.1 C). Separate tests are conducted on both high side case compressor stands and low side case compressor stands. Separate tests are also conducted with the test stand compressor running during the recovery operation, and without the test stand compressor running during the recovery operation, to calculate the system's recovery efficiency under either condition.

These tests are to be performed using a representative model of all equipment used in the recovery system to deliver recovered refrigerant to a container suitable for shipment to a refrigerant reclaimer. The test stands are to be equipped with access valves permanently installed as specific by the recovery system's vendor to represent the valves used with that system in actual field operations.

A series of five (5) recovery operations are to be performed for each compressor scenario and a recovery efficiency is calculated based on the total quantity of refrigerant captured during all five (5) recoveries. Alternatively, at the request of the recovery system's vendor, a recovery efficiency is to be calculated for each recovery event. In this case, a statistically significant number of recovery operations are to be performed. Determination of what is a statistically significant number of recoveries is to be calculated as set out below. These individual recovery efficiencies are then averaged.

There are four (4) compressor scenarios to be tested. These are a high side case compressor in working condition; a high side case compressor in nonworking condition; a low side case compressor in working condition; and a low side case compressor in nonworking condition. Recovery efficiencies calculated for the two working compressor scenarios are to be averaged to report a working compressor performance. The two nonworking compressor efficiencies are also to be averaged to report a nonworking compressor performance.

If large scale equipment is required in the system to deliver recovered refrigerant to a refrigerant reclaimer (eg. carbon desorption equipment) and it is not possible to have that equipment evaluated under the procedure, the system's vendor shall obtain engineering data on the performance of that large scale equipment that will reasonably demonstrate the percentage refrigerant lost when processed by that equipment. That data will be supplied to any person required to evaluate the performance of those systems. The following procedure will also be modified as needed to determine the weight of refrigerant recovered from a test stand and delivered to a container for shipment to the large process equipment for further processing. The percentage loss documented to occur during processing is then to be applied to the recovery efficiencies calculated in this modified procedure to determine the overall capture efficiency for the entire system.

The following are definitions of symbols used in the test procedure.

Test Stand:

''TSO'' means an original test stand weight.

''TSC'' means a charged test stand weight.

Shipping Containers:

''SCO'' means the original or empty weight of shipping container(s).

''SCF'' means the final or full weight of shipping container(s).

Recover/Transfer System:

''RSO'' means the original weight of a recovery/transfer system.

''RSF'' means the final weight of a recovery/transfer system.

''OL'' means the net amount of oil added/removed from the recovery device and/or transfer device between the beginning and end of the test for one compressor scenario.

Weighing steps are conducted with precision and accuracy of plus or minus 1.0 gram.

III. TEST PROCEDURE

1. Evacuate the test stand to 20 microns vacuum (pressure measured at a vacuum pump) for 12 hours.

2. Weigh the test stand (TSO).

3. If this is the first recovery operation being performed for a compressor scenario (or if a recovery efficiency is to be calculated for each recovery event), then weigh all devices used in the recovery system to deliver recovered refrigerant to a container suitable for shipment or delivery to a refrigerant reclaimer. Weigh only devices that can retain refrigerant in a manner that it will ultimately be transferred to a shipping container without significant release to the atmosphere (RSO).

4. Weigh final shipping containers (SCO).

5. Charge the test stand with an appropriate CFC-12 charge (either 6 oz. or 9 oz.).

6. Run the test stand for four (4) hours with 100% run time.

7. Turn off the test stand for twelve (12) hours. During this period evaporate all condensation that has collected on the test stand during step 6.

8. Weigh the test stand (TSC).

9. Recover CFC-12 from the test stand and perform all operations needed to transfer the recovered refrigerant to one of the shipping containers weighed in step 4. All recovery and transfer operations are to be performed in accordance with the operating instructions provided by the system's vendor. The compressor in the test stand is to remain ''off'' or be turned ''on'' during the recovery operation depending on whether the test is for a nonworking or working compressor performance evaluation. If a recovery efficiency is to be calculated for each recovery event, transfer the captured refrigerant to a shipping container and then skip to step 13. Otherwise continue. If the system allows for multiple recovery operations to be performed before transferring recovered refrigerant to a shipping container, the transfer operation can be delayed until either the maximum number of recovery operations allowed before a transfer is required have been performed, or the last of the five (5) recovery operations has been performed.

10. Perform any oil removal or oil addition operations needed to properly maintain the test stand and the devices used for recovery or transfer operations. Determine the net weight of the oil added or removed from the recovery device and/or transfer device. (OP1 for oil added, OP2 for oil removed).

11. Evacuate the test stand to 20 microns vacuum for 4 hours.

12. Return to step 2 unless five (5) recovery operations have been performed.

13. Weigh all final shipping containers that received recovered refrigerant (SCF).

14. Weigh the equipment weighed in step three (3) above (RSF). If a recovery efficiency is to be calculated for each recovery event, perform calculations and return to step one (1) for additional recoveries.

IV. CALCULATIONS

A. *For Five (5) Consecutive Recoveries*

Refrigerant Recoverable equals the summation of charged test stand weights minus original test stand weights.

$$\text{Refrigerant Recoverable} = \sum_{i=1}^{5} \left(TSC_i - TSO_i\right)$$

Oil Loss equals the net weight of oil added to and removed from the recovery device and/or transfer device.

$$OL = \sum_{i=1}^{5} \left(OP1_i - OP2_i\right)$$

Refrigerant Recovered equals the final weight of shipping containers minus the initial weight of final shipping containers, plus final recovery system weight, minus original recovery system weight, plus the net value of all additions and removals of oil from the recovery and transfer devices.

$$\text{Refrigerant Recovered} = \left(\sum_{i=1}^{n} SCF_i - SCO_i\right) + RSF - RSO - OL$$

n = number of shipping containers used.

Recovery Efficiency equals Refrigerant Recovered divided by Refrigerant Recoverable times 100%.

$$\text{Recovery Efficiency} = \frac{\text{Refrigerant Recovered}}{\text{Refrigerant Recoverable}}\ 100\%$$

B. *For Individual Recoveries*

Refrigerant Recoverable equals the charged test stand weight minus the original test stand weight.

$$\text{Refrigerant Recoverable} = TSCO - TSO$$

Refrigerant Recovered equals the final weight of the shipping container minus the initial weight of the shipping container plus the final weight of the recovery system minus the original recovery system weight.

$$\text{Refrigerant Recovered} = SCF - SCO + RSF - RSO$$

Recovery Efficiency equals Refrigerant Recovered divided by Refrigerant Recoverable times 100 percent.

$$\text{Recovery Efficiency} = \frac{\text{Refrigerant Recovered}}{\text{Refrigerant Recoverable}}\ 100\%$$

C. *Calculation of a Statistically Significant Number of Recoveries*

$$N_{add} = \left((t * sd) / (.10 * X)\right)^2 - N$$

Where:
N_{add} = the number of additional samples required to achieve 90% confidence.
sd = Standard deviation, or $(X/(N-1)^{5})$
X = Sample average
N = Number of samples tested

Number of samples	t for 90% confidence
2	6.814
3	2.920
4	2.353
5	2.132
6	2.015
7	1.943
8	1.895
9	1.860
10	1.833

Procedure:
1. Compute N_{add} after completing two recoveries.
2. If $N_{add}>0$, then run an additional test.
3. Re-compute N_{add}. Continue to test additional samples until $N_{add}<0$.

V. Test Procedure Approval and Certification

Each vendor of capture equipment for small appliances desiring certification will provide a representative model of its capture system and its recommended recovery procedures to an EPA approved third party laboratory for testing in accordance with this procedure. The third party laboratory will certify recovery systems that when tested in accordance with this procedure demonstrate a sufficient recovery efficiency to meet EPA regulatory requirements.

Appendix D to Subpart F of Part 82—Standards for Becoming a Certifying Program for Technicians

a. Test Preparation. Technicians must pass an EPA-approved test, provided by an EPA-approved certifying program to be certified as a Type I technician. Organizations providing Type I certification only may choose either an on-site format or a mail-in format similar to what is permitted under the MVACs program.

Technicians must pass a closed-book, proctored test, administered in a secure environment, by an EPA-approved certifying program to be certified as a Type II or Type III technician.

Technicians must pass a closed-book, proctored test (or series of tests), administered in a secure environment, by an EPA-approved certifying program to be certified as a Universal technician. Mail-in format Type I tests cannot be used toward a Universal certification.

Each certifying program must assemble tests by choosing a prescribed subset from the EPA test bank. EPA will have a test bank with more questions than are needed for an individual test, which will enable the certifying program to generate multiple tests in order to discourage cheating. Each test must include 25 questions drawn from Group 1 and 25 questions drawn from each relevant technical Group. Tests for Universal technicians will include 100 questions (25 from Group 1 and 25 from each relevant technical Group). Universal tests may be taken all at once, or by combining passing scores on separate Type I, Type II, and Type III tests. Questions should be divided in order to sufficiently cover each topic within the Group.

Certifying programs must provide a paper hand-out or electronic form of communication to technicians after they have completed their certification test that contains the following information:

—Which certifying program is providing the testing;
—Contact information for the certifying program;
—The name and contact information of the proctor; and
—When they should expect to receive their score and, if they passed, their certification card.

Each certifying program must show a method of randomly choosing which questions will be on the tests. Multiple versions of the test must be used during each testing event. Test answer sheets must include the name and address of the applicant, the name and address of the certifying program, and the date and location at which the test was administered.

Training material accompanying mail-in Type I tests must not include sample test questions mimicking the language of the certification test. All mail-in material will be subject to review by EPA.

Certifying programs may charge individuals reasonable fees for the administration of the tests. EPA will publish a list of all approved certifying programs.

b. Proctoring. A certifying program for Type I (if in-person), Type II, Type III, and Universal technicians must designate at least one proctor registered for every 50 people taking tests at the same time at a given site.

The certification test for Type I (if taken as part of a Universal certification), Type II, Type III, and Universal technicians is a closed-book exam. The proctors must ensure that the applicants for certification do not use any notes or training materials during testing. Desks or work space must be placed in a way that discourages cheating. The space and physical facilities are to be conducive to continuous surveillance by the proctors and monitors during testing.

The proctor may not receive any benefit from the outcome of the testing other than a fee for proctoring. Proctors cannot know in advance which questions are on the tests they are proctoring.

Proctors are required to verify the identity of individuals taking the test by examining photo identification. Acceptable forms of identification include but are not limited to drivers' licenses, government identification cards, passports, and military identification.

Certifying programs for Type I technicians using the mail-in format, must take sufficient measures at the test site to ensure that tests are completed honestly by each technician. Each test for Type I certification must provide a means of verifying the identification of the individual taking the test. Acceptable forms of identification include but are not limited to drivers' licenses and passports.

c. Test Security. A certifying program must demonstrate the ability to ensure the confidentiality and security of the test questions and answer keys through strict accountability procedures. An organization interested in developing a technician certification program will be required to describe these test security procedures to EPA.

After the completion of a test, proctors must collect all test forms, answer sheets, scratch paper and notes. These items are to be placed in a sealed envelope.

d. Test Content. All Type I, Type II and Type III, certification tests will include 25 questions from Group I and 25 questions from Group II. Universal certification tests will include 25 questions from Group I and 75 questions from Group II (with 25 from each of the three sector-specific areas).

Group I will ask questions in the following areas:

1. Environmental impact of CFCs, HCFCs, and substitute refrigerants
2. Laws and regulations
3. Changing industry outlook

Group II will ask questions covering sector-specific (*i.e.,* Type I, Type II, Type III) issues in the following areas:

4. Leak detection
5. Recovery Techniques
6. Safety
7. Shipping
8. Disposal

e. Grading. Tests must be graded objectively. Certifying programs must inform the applicant of their test results no later than 30 days from the date of the test. Type I certifying programs using the mail-in format must notify the applicants of their test results no later than 30 days from the date the certifying programs received the completed test and any required documentation.

The passing score for the closed-book Type I, Type II, Type III and Universal certification test is 70 percent. The passing score for Type I certification tests using the mail-in format is 84 percent.

f. Proof of Certification. Certifying programs must issue a standard wallet-sized identification card no later than 30 days from the date of the test. Type I certifying programs using mail-in formats must issue cards to certified technicians no later than 30 days from the date the certifying program receives the completed test and any required documentation.

Each wallet-sized identification card must include, at a minimum, the name of the certifying program including the date the certifying program received EPA approval, the name of the person certified, the type of certification, a unique number for the certified person that does not include a technician's social security number, and the following text:

[name of person] has successfully passed a [Type I, Type II, Type III and/or Universal—as appropriate] exam on how to responsibly handle refrigerants as required by EPA's National Recycling and Emissions Reduction Program.

g. Recordkeeping and Reporting Requirements. Certifying programs must maintain records of the names and addresses of all individuals taking the tests, the scores of all certification tests administered, and the dates and locations of all tests administered. These records must be maintained indefinitely, unless transferred to another certifying program or EPA.

EPA must receive an activity report from all approved certifying programs by every January 30 and July 30, which covers the previous six months of certifications. The first report must be submitted following the first full six-month period for which the program has been approved by EPA. This report includes the pass/fail rate. If the certifying program believes a test bank question needs to be modified, information about that question should also be included.

Approved certifying programs will receive a letter of approval from EPA. Each testing

center must display a copy of that letter at their place of business.

Approved technician certification programs that voluntarily plan to stop providing the certification test must forward all records required by this appendix and §82.161 to another program currently approved by EPA in accordance with this appendix and with §82.161. Approved technician certification programs that receive records of certified technicians from a program that no longer offers the certification test, and the program that is voluntarily withdrawing from being a technician certification program must inform EPA at the address listed in §82.160 within 30 days of receiving or transferring these records. The notification must include the name and address of the program to which the records have been transferred. If another currently approved program willing to accept the records cannot be located, these records must be submitted to EPA at the address listed at §82.160.

Technician certification programs that have had their certification revoked in accordance with §82.169 must forward all records required by this appendix and §82.161 to EPA at the address listed in §82.160. Failure to do so is a violation of 40 CFR part 82, subpart F.

h. Additional Requirements. EPA may periodically inspect testing sites to ensure compliance with EPA regulations. If testing center discrepancies are found, they must be corrected within a specified time period. If discrepancies are not corrected, EPA may suspend or revoke the certifying program's approval. The inspections will include but are not limited to a review of the certifying program's provisions for test security, the availability of space and facilities to conduct the administrative requirements and ensure the security of the tests, the availability of adequate testing facilities and spacing of the applicants during testing, a review of the proper procedures regarding accountability, and that there is no evidence of misconduct on the part of the certifying programs, their representatives and proctors, or the applicants for certification.

If the certifying programs offer training or provide review materials to the applicants, these endeavors are to be considered completely separate from the administration of the certification test.

[81 FR 82390, Nov. 18, 2016]

APPENDIX E TO SUBPART F OF PART 82—TEST PROCEDURE FOR LEAKS FROM CONTAINERS HOLDING TWO POUNDS OR LESS OF REFRIGERANT FOR USE IN AN MVAC

This appendix is based on the California Air Resources Board (CARB) standard *TP–503: Test Procedure for Leaks from Small Cans of Automotive Refrigerant*, as amended on January 5, 2010; and CARB standard *BP–A1: Balance Protocol for Gravimetric Determination of Sample Weights using a Precision Balance*, as amended January 5, 2010.

SECTION 1. APPLICABILITY

This test procedure is used by manufacturers of containers holding two pounds or less of refrigerant for use in a motor vehicle air conditioner (MVAC) to determine the leakage rate of small containers of automotive refrigerant that are subject to the requirements of 40 CFR part 82, subpart F. Specifically, this test procedure will specify the equipment, procedures, and calculations to determine if a container holding two pounds or less of refrigerant for use in an MVAC complies with the leakage rate specified in §82.154(c)(2)(ii). All terms in this appendix will follow the definitions in §82.152 unless otherwise defined in this appendix.

All containers holding two pounds or less of refrigerant for use in an MVAC must comply with other applicable codes and regulations such as local, state, or Federal safety codes and regulations.

This test procedure involves the use of materials under pressure and operations and should only be used by or under the supervision of those familiar and experienced in the use of such materials and operations. Appropriate safety precautions should be observed at all times while performing this test procedure.

SECTION 2. PRINCIPLE AND SUMMARY OF TEST PROCEDURE

This procedure is used to determine the leakage rate of containers holding two pounds or less of refrigerant for use in an MVAC (small cans). Testing will involve subjecting both full and partially empty cans in both upright and inverted positions at two temperatures: 73 °F and 130 °F.

Thirty small cans are tested under each condition for a total of 240 small cans tested. Small cans are brought to temperature stability, weighed, then stored for 30 days under specified conditions of temperature, orientation, and state of fill, then re-weighed. Leakage rate (grams/year) is estimated by (weight loss in grams) x 365/(days duration). The leakage rate is then compared to a standard of 3.00 grams/year to determine if a given small can complies with the leakage rate specified in §82.154(c)(2)(ii).

SECTION 3. BIASES AND INTERFERENCES

3.1 Contaminants on the operator's hands can affect the weight of the small can and the ability of the small can to absorb moisture. To avoid contamination of the small can, the balance operator should wear gloves while handling the small cans.

3.2 Weight determinations can be interfered with by moisture condensing on the small can and by thermal currents generated by temperature differences between the small can and the room temperature. The small cans cool during discharge and could cause condensation. For these reasons, small cans must be equilibrated to balance room temperature for at least four hours before weighing.

3.3 Variations in the temperature, pressure, and humidity of the ambient air will cause variations in the buoyancy of the small can. These variations should typically be less than 25 mg for a small can. If the small can is not leaking at all, then the uncorrected weight changes will be within the range of 0 ± 25 mg, which is about ten percent of the 247 mg loss expected after thirty days for a can leaking at 3 g/yr. In that case buoyancy corrections can be omitted. If the absolute value of the uncorrected weight change exceeds 25 mg, then all calculations must be made using weights corrected for buoyancy based on the temperature, pressure, and humidity of the weighing room.

3.4 Some electronic balances are sensitive to the effects of small static charges. The small can should be placed directly on the balance pan, ensuring metal to metal contact. If the balance pan is not grounded, the small can and balance pan should be statically discharged before weighing.

SECTION 4. SENSITIVITY AND RANGE

The mass of a full small can could range from roughly 50 g to 1000 g depending on the container capacity. A top loading balance, capable of a maximum weight measurement of not less than 1,000 g and having a minimum readability of 0.001 g, reproducibility and linearity of ± 0.002 g, must be used to perform mass measurements.

SECTION 5. EQUIPMENT

5.1 A top loading balance that meets the requirements of Section 4 above.

5.2 A NIST traceable working standard mass for balance calibration. A NIST traceable working standard mass for a balance linearity check. A reference mass to serve as a ''blank'' small can.

5.3 An enclosure capable of controlling the internal air temperature from 73 °F ± 5 °F, and an enclosure capable of controlling the internal air temperature to 130 °F ± 5 °F.

5.4 A temperature instrument capable of measuring the internal temperature of the temperature conditioning enclosures and the balance room with a sensitivity of ± 2 °F.

5.5 A barometric pressure instrument capable of measuring atmospheric pressure at the location of the balance to within ± 0.02 inches of mercury.

5.6 A relative humidity measuring instrument capable of measuring the relative humidity (RH) at the location of the balance with a sensitivity of ± 2 percent RH.

5.7 A hose with appropriate fitting for dispensing refrigerant from the small can to a recovery machine.

5.8 A refrigerant recovery machine to collect the discharged refrigerant from small cans being tested.

SECTION 6. CALIBRATION PROCEDURES

6.1 Calibrations are applied to the balance and to the support equipment such as temperature, humidity, and pressure monitoring equipment. Procedures for calibration are not spelled out here. General calibration principals for the support equipment and the balance are described in Section 11, Quality Assurance/Quality Control. Detailed calibration procedures for measurements made using the balance are contained in Attachment A: ''Balance Protocol for Gravimetric Determination of Sample Weights using a Precision Balance.''

SECTION 7. SMALL CAN PREPARATION

7.1 Receive a batch of 240 small cans of one design to be tested. These may include several SKUs from different manufacturers if the container and valve combination are the same.

7.2 Clean small cans with Alkanox solution or equivalent and dry with a lint free towel.

7.3 Confirm that the sample ID sticker on the small can matches the sample ID on the chain of custody forms.

7.4 Select a reference mass similar to the weight of a full small can. If multiple sets of similar sized small cans are being tested, only one reference mass is needed; it can be used with all sets. Store the reference mass in the balance area.

7.5 Evacuate the contents of one half of the small cans (120 cans) into the refrigerant recovery machine using normal DIY dispensing procedures until each small can is approximately half full.

7.6 Select a reference mass similar to the weight of the half-full small can. If multiple sets of similar size small cans are being tested, only one reference mass is needed; it can be used with all sets. Store the reference mass in the balance area.

SECTION 8. SMALL CAN WEIGHING

Weighing cans on the balance is done in accordance with Attachment A to this appendix. Attachment A describes how to conduct weight determinations including appropriate calibration and QC data. This section, ''Small Can Weighing,'' describes the overall process, not the details of how to use the balance.

Initial Weights

8.1 Put on gloves. Check the small cans for contamination.

8.2 Place the 240 small cans into a location where they can equilibrate to balance room temperature. Record the small can test IDs and the equilibration start time on the Small Can Test Data Forms available on EPA's Web site in sets of thirty, one form for each of the eight test conditions.

8.3 Let cans equilibrate for at least four hours.

8.4 Weigh the set of 240 small cans and the reference weights using Attachment A and log the results to the Balance Weighing Log Form available on EPA's Web site.

8.5 Transfer data from the Balance Weighing Log Form to the Small Can Test Data Form in sets of 30, one set for each of the eight conditions to be tested.

Thirty-Day Soak

8.6 Place each set of 30 small cans into the appropriate orientation and temperature for soaking:

30 full small cans—73 °F, upright
30 full small cans—73 °F, inverted
30 full small cans—130 °F, upright
30 full small cans—130 °F, inverted
30 half-full small cans—73 °F, upright
30 half-full small cans—73 °F, inverted
30 half-full small cans—130 °F, upright
30 half-full small cans—130 °F, inverted

8.7 Soak the small cans for 30 days undisturbed.

Final Weighing

8.8 Place the 240 small cans into a location where they can equilibrate to balance room temperature.

8.9 Let the small cans equilibrate for at least four hours.

8.10 Weigh the set of 240 small cans, the reference weights, and any additional sets of small cans using Attachment A.

8.11 Transfer data from the Balance Weighing Log Form to the corresponding Small Can Test Data Forms.

SECTION 9. CALCULATIONS

Corrections for Buoyancy

The calculations in this section are described in terms of ''weight.'' Mass is a property of the small can, whereas weight is a force due to the effects of buoyancy and gravity. Procedures for correcting the effect of buoyancy are given in Attachment B of this appendix. Ignoring buoyancy, *i.e.,* using weight data uncorrected for buoyancy effects, is acceptable for a thirty day test if the absolute magnitude of the weight change is less than 25 mg. If the uncorrected weight change exceeds 25 mg for any small can, then correct all small can weights for buoyancy using the procedures in Attachment B before performing the calculations described below.

Calculation of Leak Rate

The emission rate in grams/day for each small can is calculated by subtracting the final weight from the initial weight and then dividing the weight difference by the time difference measured in days to the nearest hour (nearest 1/24 of a day). The emission rate in g/day is multiplied by 365 to determine emission rate in grams/yr. If the annual emission rate for any small can exceeds the entire small can contents, then the annual emission rate for that small can is adjusted to equal the entire small can contents/year (*e.g.*, about 350 g/yr for a 12 ounce small can). The annual emission rate for the purpose of the test is calculated by averaging the 240 individual adjusted annual emission rates and rounding to two decimal places. The cans fail the test if the adjusted annual emission rate averaged over 240 cans is greater than 3.00 g/yr. The calculations are described below.

Loss rate for each small can

$Ei_{daily} = (Wi_{final} - Wi_{initial})/(Di_{final} - Di_{initial})$ g/day

$Ei_{annual} = 365 \times Ei_{daily}$ g/year

$Ei_{adjusted}$ = Minimum of ($Ei_{adjusted}$, Ci/year) g/yr

Where,

Ei = emission rate

Wi_{final} = weight of can i after soaking (grams)

$Wi_{initial}$ = weight of can I before soaking (grams)

Di_{final} = date/time of final weight measurements (days)

$Di_{initial}$ = date/time of initial weight measurements (days)

Ci = original factory mass of refrigerant in can i

Note: Date/Times are measured in days. Microsoft Excel stores dates and times in days, and the calculations can be made directly in Excel. If calculations are made manually, calculate serial days to the nearest hour for each date and time as follows:

D = Julday + Hour/24

Where,

Julday = serial day of the year: Jan 1 = 1, Jan 31 = 31, Feb 1 = 32, etc.

Hour = hour of day using 24-hour clock, 0 to 23

Calculate the average loss rate for the 240 small cans as follows:

E_{mean} = [Sum ($E_{adjusted}i$), i = 1 to 240]/240

SECTION 10. RECORDKEEPING

During small can weighing, record the small can weights and date/times on the Balance Weighing Log Form. After each weighing session, transfer the measured weights and date/times from the Balance Weighing Log Form to the Small Can Test Data Form.

At the end of the test, complete the calculations described in Section 9, Calculations, and record the results on the Small Can Test Data Form.

SECTION 11. QUALITY ASSURANCE/QUALITY CONTROL

11.1 All temperature, pressure, and humidity instruments should be calibrated annually against NIST traceable laboratory standards. The main purpose of the NIST traceable calibration is to establish the absolute accuracy of the device. The instruments should also be checked periodically such as weekly, monthly, or quarterly against intermediate standards or against independent instruments. For example, a thermocouple can be checked weekly against a wall thermometer. A barometer or pressure gauge can be checked weekly by adjusting to sea level and comparing with local airport data. The main purpose of the frequent checks is to verify that the device has not failed in some way. This is especially important for electronic devices such as a digital thermometer, but even a liquid filled thermometer can develop a problem such as a bubble.

11.2 The balance should be serviced and calibrated annually by an independent balance service company or agency using NIST traceable reference masses. Servicing verifies accuracy and linearity, and the maintenance performed helps ensure that a malfunction does not develop.

11.3 The balance must also be calibrated and its linearity checked with working standards before and after each weighing session, or before and after each group of 24 small cans if more than 24 small cans are weighed in a session. Procedures for calibrating and using the balance, as well as recording balance data, are described in the accompanying balance weighing protocol. These procedures include zero checks, calibration checks, and reference mass checks. Procedures for calculating quality control data from those checks are described in Attachment A.

11.4 The small cans are cleaned then handled using gloves to prevent contamination. All equilibration and soaking must be done in a dust free area.

SECTION 12. BALANCE PROTOCOL FOR GRAVIMETRIC DETERMINATION OF SAMPLE WEIGHTS USING A PRECISION BALANCE

12.1 *Scope and application*

This Protocol summarizes a set of procedures and tolerances for weighing objects in the range of 0 to 1,000 g with a resolution of 0.001 g. This protocol only addresses balance operations, it does not address project requirements for equilibration, sample hold time limits, sample collection etc.

12.2 *Summary of method*

The balance is zeroed and calibrated using procedures defined herein. Object weight determinations are conducted along with control object weight determinations, zero checks, calibration checks, sensitivity checks, and replicate weightings in a defined sequence designed to control and quantitatively characterize precision and accuracy.

12.3 *Definitions*

N/A.

12.4 *Interferences*

Object weights can be affected by temperature and relative humidity of their environment, air currents, static electricity, gain and loss of water vapor, gain or loss of and loss of volatile compounds directly from the sample or from contaminants such as finger prints, marker ink, and adhesive tape.

Contamination, transfer of material to or from the samples, is controlled by conducting operations inside a clean area dedicated to the purpose and having a filtered laminar air flow where possible; by wearing gloves while handling all samples and related balance equipment; by using forceps to handle small objects, and by keeping the balance and all related equipment inside the clean area.

Air currents are controlled by conducting weighing operations inside a closed chamber or glove box and by allowing the substrates to reach temperature and relative humidity equilibrium. The chamber is maintained at 40 percent relative humidity and 25 °C by a continuous humidity and temperature control system. The temperature and RH conditions are recorded at least once per weighing sessions. Equilibration times for samples that are particularly sensitive to humidity or to loss of semi-volatiles species are specified by project requirements.

Static electric charges on the walls of the balance and the weighed objects, including samples, controls, and calibration weights, can significantly affect balance readings. Static is avoided by the operator ground himself and test objects as described in the balance manual.

12.5 *Personnel health and safety*

N/A

12.6 *Equipment and supplies*

- Filtered, temperature and humidity controlled weighing chamber.
- Precision Balance
- Plastic forceps
- Nylon fabric gloves.
- Working calibration weights: ANSI Class 2, 1000g and 500 g
- Working sensitivity weight: 50 mg
- Reference objects: references are one or more objects that are typical of the objects to be weighed during a project, but that are stored permanently inside the balance glove box. Reference objects are labeled Test1, Test2, Test3, etc.

12.7 *Reagents and standard*

N/A

12.8 *Sample collection, preservation, and storage*

N/A. See relevant project requirements and SOPs.

12.9 *Quality control*

Data quality is controlled by specifying frequencies and tolerances for Zero, Calibration, Linearity, and Sensitivity checks. If checks do not meet tolerance criteria, then samples must be re-weighed. In addition, the procedures specify frequencies for Control Object Checks.

Data quality is quantitatively characterized using Zero Check, Calibration Check, and Control Check data. These data are summarized monthly in statistics and QC charts.

12.10 *Calibration and standardization*

The absolute accuracy of the balance is established by calibration against an ANSI Class 2, stainless steel working weight: 1000.000 g ± 0.0025 g. Linearity is established checking the midpoint against an ANSI Class 2 stainless steel working weight: 500.000 ± 0.0012 g. Sensitivity is established using and ANSI Class 2 stainless steel or aluminum working weight: 50 mg. Precision is checked by periodically checking zero, calibration, and reference object weights.

12.11 *Procedure*

12.11.1 *Overview of Weighing Sequence*

Weighing a series of substrates consists of performing the following procedures in sequence, while observing the procedures for handling and the procedures for reading the balance:

1. Initial Adjustment
2. Weigh eight samples
3. Zero Check
4. Weigh eight samples
5. Zero Check
6. Weigh eight samples
7. Calibration Check
8. Return to step 2.
9. If less than 24 cans are weighed, perform a final Calibration Check at the end of weighing.

This sequence is interrupted and samples are reweighed if QC check tolerances are not met. Each of these procedures along with procedures for handling and reading the balance are described below. The QC tolerances referred to in these procedures are listed in Table 1.

12.11.2 *Handling*

1. Never touch samples, weights, balance pans, etc. with bare hands. Wear powder free gloves to handle the weights, controls, and samples.

12.11.3 *Reading the Balance*

1. Close the door. Wait for the balance stabilization light to come on, and note the reading.

2. Watch the balance reading for 30 sec (use a clock). If the reading has not changed by more than 0.001 g from the reading noted in step 1, then record the reading observed at the end of the 30 sec period.

3. If the reading has drifted more than 0.001 g note the new balance reading and go to step 2.

4. If the balance reading is flickering back and forth between two consecutive values choose the value that is displayed more often than the other.

5. If the balance reading is flickering equally back and forth between two consecutive values choose the higher value.

12.11.4 *Initial Adjustment*

1. Empty the sample pan Close the door. Select Range 1000 g
2. Wait for a stable reading
3. Record the reading with QC code IZC (initial zero check)
4. Press the Tare button
5. Record the reading in the logbook with QC code IZA (initial zero adjust)
6. Place the 1,000 g working calibration weight on the balance pan
7. Wait for a stable reading.
8. Record the reading with QC code ICC (initial cal check)
9. Press the Calibrate button
10. Record the reading with QC code ICA (initial cal adjust)
11. Remove the calibration weight.
12. Wait for a stable reading.
13. Record the reading with QC code IZC.
14. If the zero reading exceeds ± 0.002 g, go to step 4.
15. Place the 500 g calibration weight on the balance pan
16. After a stable reading, record the reading with QC code C500. Do not adjust the balance.
17. Add the 0.050 g weight to 500 g weight on the balance pan.
18. After a stable reading, record the reading with QC code C0.05. Do not adjust the balance.
19. Weigh reference object TEST1, record reading with QC code T1.
20. Weigh the reference object TEST2, TEST3, etc. that is similar in weight to the samples that you will be weighing. Record with QC code T2, T3, etc.

12.11.5 *Zero Check*

1. Empty the sample pan. Close the door.
2. Wait for a stable reading
3. Record the reading with QC code ZC
4. If the ZC reading is less than or equal to the zero adjustment tolerance shown in Table 1, return to weighing and *do not adjust the zero*. If the ZC reading exceeded the zero adjustment tolerance, proceed with steps 5 through 7.
5. Press the Tare button
6. Record the reading in the logbook with QC code ZA.
7. If the ZC reading exceeded the zero reweigh tolerance, change the QC code recorded in step 3 from ZC to FZC. Then

enter a QC code of FZ into the QC code column of all samples weights obtained after the last valid zero check. Re- weigh all of those samples, recording new data in new rows of the logbook.

12.11.6 *Calibration Check*

1. First, follow procedures for Zero Check. If the ZC was within tolerance, tare the balance anyway (*i.e.*, follow steps 5 and 6 of the Zero Check method)
2. Place the 1,000 g working calibration weight on the sample pan, wait for a stable reading.
3. Record the reading with QC code C1000
4. If the C1000 reading is less than or equal to the calibration adjustment tolerances, skip steps 5 through 8 and proceed to step 9. *Do not adjust the calibration.*
5. If the C100 reading exceeded the calibration adjust tolerance, press the Calibrate button.
6. Record the reading in the logbook with QC code CA
7. Perform a Zero Check (follow the Zero Check method)
8. If the C1000 reading exceeded the calibration re-weigh tolerance, change the code recorded in step 3 from C1000 to FC1000. Enter FC into the QC column for all sample weights obtained after the last valid calibration check. Re-weigh all of those samples, recording new data in new rows of the logbook.

12.11.7 *Replicate Weighing Check*

1. This protocol does not include reweigh samples to obtain replicates. The projects for which this protocol is intended already include procedures multiple weightings of each sample.

TABLE 1—QC TOLERANCES AND FREQUENCIES FOR BALANCE PROTOCOL

Reading Tolerance:	
0.001 g, stable for 30 sec.	
Adjustment Tolerances:	
Zero:	−0.003 to +0.003 g.
Calibration:	999.997 to 1000.003 g.
Controls:	none.
Replicates:	none.
Re-weigh Tolerances:	
Zero:	−0.005 to +0.005 g.
Calibration:	999.995 to 1000.005 g.
Controls:	none.
Replicates:	none.
Reference Objects:	
Test 1—A reference object weighing about 400 g.	
Test 2—A reference object weighing about 200 g.	
Test 3—A reference object weighing about 700 g.	
QC Frequencies:	
Zero Checks:	once per 8 samples.

TABLE 1—QC TOLERANCES AND FREQUENCIES FOR BALANCE PROTOCOL—Continued

Calibration Checks:	once per 24 samples.
Repeat weighings:	none (test method includes replicate determinations).
Control objects:	once per weighing session.

12.12 *Data analysis and calculations*

For Zero Checks, let Z equal the recorded Zero Check value. For control checks let T1, T2, etc. equal the recorded value for control object Test 1, Test 2, etc. For Calibration Checks, let C1000 equal C1000 reading minus 1000, M = C500—500, S = .C.050—C500—.050. For Replicate Checks, let D equal the loss that occurred between the first and second measurements. In summary:

T1 = T1
T2 = T2
T3 = T3
Z = ZC—0
C = C1000—1000
M = C500—500
G = C050—C500—.050

Tabulate the mean and standard deviation for each of the following: Z, C, M, G. T1, T2, T3. Depending on the number of operators using the balance and the number of protocols in use, analyze the data by subcategories to determine the effects of balance operator and protocol. Each of these standard deviations, S_Z, S_C, etc. is an estimate of the precision of single weight measurement.

For Z, C, M, and G, check the mean value for statistical difference from 0. If the means are statistically different than zero, troubleshooting to eliminate bias may be called for. For Z, C, M, G, T1, T2, T3, check that the standard deviations are all comparable. If there are systematic differences, then troubleshooting to eliminate the problem may be called for.

Note that the precision of a weight gain, involves two weight determinations, and therefore is larger than S by a factor of sqrt(2). On the other hand replicate weighings improves the precision of the determinations by a factor of sqrt(N). If N = 2, *i.e.*, duplicates, then the factors cancel each other.

To estimate the overall uncertainty in a weight determination, a conservative estimate might be to combine the imprecision contributed by the zero with the imprecision contributed by the calibration.

$U = Sqrt(S_Z^2 + S_C^2)$

The uncertainty in a weight gain from N replicates is then given by:

$U_{gain} = Sqrt(2) \times Sqrt(S_Z^2 + S_C^2)/Sqrt(N)$

But due to the balance adjustment and reweigh tolerances, we expect S_Z to approximately equal S_C, to approximately equal S_M, etc. tolerances, so that the equation above becomes:

$U_{gain} = 2 \times S/Sqrt(N)$

Where S is any individual standard deviation; or better, a pooled standard deviation.

12.13 *Method performance*

The data necessary to characterize the accuracy and precision of this method are still being collected. The method is used primarily to weigh objects before and after a period of soaking to determine weight loss by subtraction. Given the reweigh tolerances, we expect that the precision of weight gain determinations will be on the order of 0.006 g at the 1-sigma level. Bias in the weight gain determination, due to inaccuracy of the calibration weight and to fixed non-linearity of the balance response is on the order 0.005 percent of the gain.

12.14 *Pollution prevention*

When discharging half the can contents during can preparation, do not vent the contents of the small can to the atmosphere. Use an automotive recovery machine to transfer small can contest to a recovery cylinder.

12.15 *Waste management*

Dispose of the contents of the recycle cylinder through a service that consolidates waste for shipment to EPA certified facilities for reclaiming or destruction.

SECTION 13. COMPENSATION OF WEIGHT DATA FOR BUOYANCY AND GRAVITY EFFECTS

13.1 *Gravity*

Variations in gravity are important only when weighing objects under different gravitational fields, *i.e.*, at different locations or at different heights. Since the balance procedures calibrate the balance against a known mass (the calibration ''weight'') at the same location where sample objects are weighed, there is no need to correct for location. Although both the sample and the calibration weight are used at the same location, there will be a difference in the height of the center of gravity of the sample object (small can) and the center of gravity of the reference mass (calibration weight). However, this difference in height is maintained during both the initial weights and final weights, affecting the initial and final weights by the same amount, and affecting the scale of the weight difference by only a few ppm. In any event, the magnitude of this correction is on the order of 0.3 ug per kg per mm of height difference. A difference on the order of 100 mm would thus yield a weight difference of about 0.03 mg, which is insignificant compared to our balance resolution which is 0.001 g or 1 mg.

Based on the discussion above, no corrections for gravity are necessary when determining weight changes in small cans.

13.2 *Buoyancy*

Within a weighing session, the difference in density between the sample object and the calibration weight will cause the sample object weight value to differ from its mass value due to buoyancy. For a 1-liter object in air at 20 °C and at 1 atm, the buoyant force is about 1.2 g. The volume of a 1 kg object with a density of 8 g/cm^3 (*e.g.*, a calibration weight), is about 0.125 liters, and the buoyancy force is about 0.15 g. Variations in air density will affect both of these values in proportion. The net value being affected by variations in air density is thus on the order of 1.2 − 0.15 = 1.05 g. Air density can vary up or down by 2 percent or more due to variations in barometric pressure, temperature, and humidity. The buoyancy force will then vary up or down by 0.02 g, or 20 mg. This is significant compared to the weight change expected after one week for a can leaking at 3 grams per year, which is 57 mg.

Based on the discussion above, buoyancy corrections must be made.

Variables measured or calculated:

V_{can} = volume of can (cm^3). Estimate to within 10 percent by measuring the can dimensions or by water displacement. Error in the can volume will cause an error in the absolute amount of the buoyancy force, but will have only a small effect on the change in buoyancy force from day to day.

W_{can} = nominal weight of a can (g), used to calculate the nominal density of the can.

ρ_{can} = nominal density of a small can (g/cm^3). The nominal values can be applied to corrections for all cans. It is not necessary to calculate a more exact density for each can. Calculate once for a full can and once for a half full can as follows:

ρ_{can} = Wcan /Vcan

T = Temperature in balance chamber (degrees Celsius).

RH = Relative humidity in balance chamber (expressed a number between 0 and 100).

P_{baro} = Barometric pressure in balance chamber (millibar). Use actual pressure, NOT pressure adjusted to sea level.

ρ_{air} = density of air in the balance chamber (g/cm^3). Calculate using the following approximation:

$\rho_{air} = 0.001*[0.348444*P_{baro} - (RH/100) \times (0.252 \times T - 2.0582)]/(T + 273.15)$

ρ_{ref} = the reference density of the calibration weight (g/cm^3). Should be 8.0 g/cm^3.

Equation to correct for buoyancy: $W_{corrected} = W_{reading} \times (1 - \rho_{air}/\rho_{ref})/(1 - \rho_{air}/\rho_{can})$

[81 FR 82392, Nov. 18, 2016]

Subpart G—Significant New Alternatives Policy Program

SOURCE: 59 FR 13147, Mar. 18, 1994, unless otherwise noted.

§ 82.170 Purpose and scope.

(a) The purpose of these regulations in this subpart is to implement section 612 of the Clean Air Act, as amended, regarding the safe alternatives policy on the acceptability of substitutes for ozone-depleting compounds. This program will henceforth be referred to as the ''Significant New Alternatives Policy'' (SNAP) program. The objectives of this program are to identify substitutes for ozone-depleting compounds, to evaluate the acceptability of those substitutes, to promote the use of those substitutes believed to present lower overall risks to human health and the environment, relative to the class I and class II compounds being replaced, as well as to other substitutes for the same end-use, and to prohibit the use of those substitutes found, based on the same comparisons, to increase overall risks.

(b) The regulations in this subpart describe persons and substitutes subject to reporting requirements under the SNAP program and explain preparation and submission of notices and petitions on substitutes. The regulations also establish Agency procedures for reviewing and processing EPA's determinations regarding notices and petitions on substitutes. Finally, the regulations prohibit the use of alternatives which EPA has determined may have adverse effects on human health or the environment where EPA has identified alternatives in particular industrial use sectors that on an overall basis, reduce risk to human health and the environment and are currently or potentially available. EPA will only prohibit substitutes where it has identified other substitutes for a specific application that are acceptable and are currently or potentially available.

(c) Notifications, petitions and other materials requested shall be sent to: SNAP Document Control Officer, U.S. Environmental Protection Agency (6205–J), 1200 Pennsylvania Ave., NW., Washington, DC 20460.

§ 82.172 Definitions.

Act means the Clean Air Act, as amended, 42 U.S.C. 7401 *et seq.*

Agency means the U.S. Environmental Protection Agency.

Application means a specific use within a major industrial sector end-use.

Class I or class II means the specific ozone-depleting compounds described in section 602 of the Act.

Decision means any final determination made by the Agency under section 612 of the Act on the acceptability or unacceptability of a substitute for a class I or II compound.

EPA means the U.S. Environmental Protection Agency.

End-use means processes or classes of specific applications within major industrial sectors where a substitute is used to replace an ozone-depleting substance.

Formulator means any person engaged in the preparation or formulation of a substitute, after chemical manufacture of the substitute or its components, for distribution or use in commerce.

Health and safety study or *study* means any study of any effect of a substitute or its components on health and safety, or the environment or both, including underlying data and epidemiological studies, studies of occupational, ambient, and consumer exposure to a substitute, toxicological, clinical, and ecological, or other studies of a substitute and its components, and any other pertinent test. Chemical identity is always part of a health and safety study. Information which arises as a result of a formal, disciplined study is included in the definition. Also included is information relating to the effects of a substitute or its components on health or the environment. Any available data that bear on the effects of a substitute or its components on health or the environment would be included. Examples include:

(1) Long- and short-term tests of mutagenicity, carcinogenicity, or teratogenicity; data on behavioral disorders; dermatoxicity; pharmacological effects; mammalian absorption, distribution, metabolism, and excretion; cumulative, additive, and synergistic effects; acute, subchronic, and chronic effects; and structure/activity analyses;

(2) Tests for ecological or other environmental effects on invertebrates, fish, or other animals, and plants, including: Acute toxicity tests, chronic toxicity tests, critical life stage tests,

behavioral tests, algal growth tests, seed germination tests, microbial function tests, bioconcentration or bioaccumulation tests, and model ecosystem (microcosm) studies;

(3) Assessments of human and environmental exposure, including workplace exposure, and effects of a particular substitute on the environment, including surveys, tests, and studies of: Biological, photochemical, and chemical degradation; air, water and soil transport; biomagnification and bioconcentration; and chemical and physical properties, e.g., atmospheric lifetime, boiling point, vapor pressure, evaporation rates from soil and water, octanol/water partition coefficient, and water solubility;

(4) Monitoring data, when they have been aggregated and analyzed to measure the exposure of humans or the environment to a substitute; and

(5) Any assessments of risk to health or the environment resulting from the manufacture, processing, distribution in commerce, use, or disposal of the substitute or its components.

Importer means any person who imports a chemical substitute into the United States. *Importer* includes the person primarily liable for the payment of any duties on the merchandise or an authorized agent acting on his or her behalf. The term also includes, as appropriate:

(1) The consignee;

(2) The importer of record;

(3) The actual owner; and

(4) The transferee, if the right to draw merchandise in a bonded warehouse has been transferred.

Major Industrial Use Sector or Sector means an industrial category which EPA has reviewed under the SNAP program with historically high consumption patterns of ozone-depleting substances, including: Refrigeration and air conditioning; foam-blowing; fire suppression and explosion protection; solvents cleaning; aerosols; sterilants; tobacco expansion; pesticides; and adhesives, coatings and inks sectors.

Manufacturer means any person engaged in the direct manufacture of a substitute.

Mixture means any mixture or blend of two or more compounds.

Person includes an individual, corporation, partnership, association, state, municipality, political subdivision of a state, and any agency, department, or instrumentality of the United States and any officer, agent, or employee of such entities.

Pesticide has the meaning contained in the Federal Insecticide, Fungicide, and Rodenticide Act, 7 U.S.C. 136 *et seq.* and the regulations issued under it.

Potentially available is defined as any alternative for which adequate health, safety, and environmental data, as required for the SNAP notification process, exist to make a determination of acceptability, and which the Agency reasonably believes to be technically feasible, even if not all testing has yet been completed and the alternative is not yet produced or sold.

Premanufacture Notice (PMN) Program has the meaning described in 40 CFR part 720, subpart A promulgated under the Toxic Substances Control Act, 15 U.S.C. 2601 *et seq.*

Producer means any person who manufactures, formulates or otherwise creates a substitute in its final form for distribution or use in interstate commerce.

Research and development means quantities of a substitute manufactured, imported, or processed or proposed to be manufactured, imported, or processed solely for research and development.

Residential use means use by a private individual of a chemical substance or any product containing the chemical substance in or around a permanent or temporary household, during recreation, or for any personal use or enjoyment. Use within a household for commercial or medical applications is not included in this definition, nor is use in automobiles, watercraft, or aircraft.

Significant new use means use of a new or existing substitute in a major industrial use sector as a result of the phaseout of ozone-depleting compounds.

Small uses means any use of a substitute in a sector other than a major industrial use sector, or production by any producer for use of a substitute in a major industrial sector of 10,000 lbs. or less per year.

Substitute or alternative means any chemical, product substitute, or alternative manufacturing process, whether existing or new, intended for use as a replacement for a class I or II compound.

Test marketing means the distribution in interstate commerce of a substitute to no more than a limited, defined number of potential customers to explore market viability in a competitive situation. Testing must be restricted to a defined testing period before the broader distribution of that substitute in interstate commerce.

Use means any use of a substitute for a Class I or Class II ozone-depleting compound, including but not limited to use in a manufacturing process or product, in consumption by the end-user, or in intermediate uses, such as formulation or packaging for other subsequent uses.

Use restrictions means restrictions on the use of a substitute imposing either conditions on how the substitute can be used across a sector end-use or limits on the end-uses or specific applications where it can be used within a sector.

§ 82.174 Prohibitions.

(a) No person may introduce a new substitute into interstate commerce before the expiration of 90 days after a notice is initially submitted to EPA under § 82.176(a).

(b) No person may use a substitute which a person knows or has reason to know was manufactured, processed or imported in violation of the regulations in this subpart, or knows or has reason to know was manufactured, processed or imported in violation of any use restriction in the acceptability determination, after the effective date of any rulemaking imposing such restrictions.

(c) No person may use a substitute without adhering to any use restrictions set by the acceptability decision, after the effective date of any rulemaking imposing such restrictions.

(d) No person may use a substitute after the effective date of any rulemaking adding such substitute to the list of unacceptable substitutes.

(e) *Rules Stayed for Reconsideration.* Notwithstanding any other provision of this subpart, the effectiveness of subpart G is stayed from December 8, 1994, to March 8, 1995, only as applied to use of substitutes for export.

[59 FR 13147, Mar. 18, 1994, as amended at 59 FR 63256, Dec. 8, 1994; 60 FR 3303, Jan. 13, 1995]

§ 82.176 Applicability.

(a) Any producer of a new substitute must submit a notice of intent to introduce a substitute into interstate commerce 90 days prior to such introduction. Any producer of an existing substitute already in interstate commerce must submit a notice as of July 18, 1994, if such substitute has not already been reviewed and approved by the Agency.

(b) With respect to the following substitutes, producers are exempt from notification requirements:

(1) *Substitutes already listed as acceptable.* Producers need not submit notices on substitutes that are already listed as acceptable under SNAP.

(2) *Small sectors.* Persons using substitutes in sectors other than the nine principal sectors reviewed under this program are exempt from the notification requirements. This exemption shall not be construed to nullify an unacceptability determination or to allow use of an otherwise unacceptable substitute.

(3) *Small volume use within SNAP sectors.* Within the nine principal SNAP sectors, persons introducing a substitute whose expected volume of use amounts to less than 10,000 lbs. per year within a SNAP sector are exempt from notification requirements. This exemption shall not be construed to allow use of an otherwise unacceptable substitute in any quantity. Persons taking advantage of this exemption for small uses must maintain documentation for each substitute describing how the substitute meets this small use definition. This documentation must include annual production and sales information by sector.

(4) *Research and development.* Production of substitutes for the sole purpose of research and development is exempt from reporting requirements.

(5) *Test marketing.* Use of substitutes for the sole purpose of test marketing

is exempt from SNAP notification requirements until 90 days prior to the introduction of such substitutes for full-scale commercial sale in interstate commerce. Persons taking advantage of this exemption are, however, required to notify the Agency in writing that they are conducting test marketing 30 days prior to the commencement of such marketing. Notification shall include the name of the substitute, the volume used in the test marketing, intended sector end-uses, and expected duration of the test marketing period.

(6) *Formulation changes.* In cases where replacement of class I or II compounds causes formulators to change other components in a product, formulators are exempt from reporting with respect to these auxiliary formulation changes. However, the SNAP submitter is required to notify the Agency if such changes are expected to significantly increase the environmental and human health risk associated with the use of any class I or class II substitute.

(7) *Substitutes used as feedstocks.* Producers of substitutes used as feedstocks which are largely or entirely consumed, transformed or destroyed in the manufacturing or use process are exempt from reporting requirements concerning such substitutes.

(c) Use of a substitute in the possession of an end-user as of March 18, 1994, listed as unacceptable or acceptable subject to narrowed use limits may continue until the individual end-users' existing supply, as of that date, of the substitute is exhausted. Use of substitutes purchased after March 18, 1994, is not permitted subsequent to April 18, 1994.

§ 82.178 Information required to be submitted.

(a) Persons whose substitutes are subject to reporting requirements pursuant to § 82.176 must provide the following information:

(1) *Name and description of the substitute.* The substitute should be identified by its: Chemical name; trade name(s); identification numbers; chemical formula; and chemical structure.

(2) *Physical and chemical information.* The substitute should be characterized by its key properties including but not limited to: Molecular weight; physical state; melting point; boiling point; density; taste and/or odor threshold; solubility; partition coefficients (Log K_{ow}, Log K_{oc}); atmospheric lifetime and vapor pressure.

(3) *Substitute applications.* Identification of the applications within each sector end-use in which the substitutes are likely to be used.

(4) *Process description.* For each application identified, descriptive data on processing, including in-place pollution controls.

(5) *Ozone depletion potential.* The predicted 100-year ozone depletion potential (ODP) of substitute chemicals. The submitter must also provide supporting documentation or references.

(6) *Global warming impacts.* Data on the total global warming potential of the substitute, including information on the GWP index and the indirect contributions to global warming caused by the production or use of the substitute (e.g., changes in energy efficiency). GWP must be calculated over a 100, 500 and 1000-year integrated time horizon.

(7) *Toxicity data.* Health and safety studies on the effects of a substitute, its components, its impurities, and its degradation products on any organism (e.g., humans, mammals, fish, wildlife, and plants). For tests on mammals, the Agency requires a minimum submission of the following tests to characterize substitute risks: A range-finding study that considers the appropriate exposure pathway for the specific use (e.g., oral ingestion, inhalation, etc.), and a 90-day subchronic repeated dose study in an appropriate rodent species. For certain substitutes, a cardiotoxicity study is also required. Additional mammalian toxicity tests may be identified based on the substitute and application in question. To sufficiently characterize aquatic toxicity concerns, both acute and chronic toxicity data for a variety of species are required. For this purpose, the Agency requires a minimum data set as described in ''Guidelines for Deriving Numerical National Water Quality Criteria for the Protection of Aquatic Organisms and their Uses,'' which is available through the National Technical Information Service (#PB 85–227049). Other relevant information and

data summaries, such as the Material Safety Data Sheets (MSDS), should also be submitted. To assist in locating any studies previously submitted to EPA and referred to, but not included in a SNAP submission, the submitter must provide citations for the date, type of submission, and EPA Office to which they were submitted, to help EPA locate these quickly.

(8) *Environmental fate and transport.* Where available, information must be submitted on the environmental fate and transport of substitutes. Such data shall include information on bioaccumulation, biodegradation, adsorption, volatility, transformation, and other data necessary to characterize movement and reaction of substitutes in the environment.

(9) *Flammability.* Data on the flammability of a substitute chemical or mixture are required. Specifically, the flash point and flammability limits are needed, as well as information on the procedures used for determining the flammability limits. Testing of blends should identify the compositions for which the blend itself is flammable and include fractionation data on changes in the composition of the blend during various leak scenarios. For substitutes that will be used in consumer applications, documentation of testing results conducted by independent laboratories should be submitted, where available. If a substitute is flammable, the submitter must analyze the risk of fire resulting from the use of such a substitute and assess the effectiveness of measures to minimize such risk.

(10) *Exposure data.* Available modeling or monitoring data on exposures associated with the manufacture, formulation, transport, use and disposal of a substitute. Descriptive process information for each substitute application, as described above, will be used to develop exposure estimates where exposure data are not readily available. Depending on the application, exposure profiles may be needed for workers, consumers, and the general population.

(11) *Environmental release data.* Data on emissions from the substitute application and equipment, as well as on pollutant releases or discharge to all environmental media. Submitters should provide information on release locations, and data on the quantities, including volume, of anticipated waste associated with the use of the substitute. In addition, information on anticipated waste management practices associated with the use of the substitute. Any available information on any pollution controls used or that could be used in association with the substitute (e.g., emissions reduction technologies, wastewater treatment, treatment of hazardous waste) and the costs of such technology must also be submitted.

(12) *Replacement ratio for a chemical substitute.* Information on the replacement ratio for a chemical substitute versus the class I or II substances being replaced. The term ''replacement ratio'' means how much of a substitute must be used to replace a given quantity of the class I or II substance being replaced.

(13) *Required changes in use technology.* Detail on the changes in technology needed to use the alternative. Such information should include a description of whether the substitute can be used in existing equipment—with or without some retrofit—or only in new equipment. Data on the cost (capital and operating expenditures) and estimated life of any technology modifications should also be submitted.

(14) *Cost of substitute.* Data on the expected average cost of the alternative. In addition, information is needed on the expected equipment lifetime for an alternative technology. Other critical cost considerations should be identified, as appropriate.

(15) *Availability of substitute.* If the substitute is not currently available, the timing of availability of a substitute should be provided.

(16) *Anticipated market share.* Data on the anticipated near-term and long-term nationwide substitute sales.

(17) *Applicable regulations under other environmental statutes.* Information on whether the substitute is regulated under other statutory authorities, in particular the Clean Water Act, Safe Drinking Water Act, the Resource Conservation and Recovery Act, the Federal Insecticide, Fungicide, and Rodenticide Act, the Toxic Substances Control Act, the Comprehensive Environmental Response, Compensation

and Liability Act, the Emergency Planning and Community Right-to-Know Act, or other titles under the Clean Air Act.

(18) *Information already submitted to the Agency*. Information requested in the SNAP program notice that has been previously submitted to the Agency as part of past regulatory and information-gathering activities may be referenced rather than resubmitted. Submitters who cannot provide accurate references to data sent previously to the Agency should include all requested information in the SNAP notice.

(19) *Information already available in the literature*. If any of the data needed to complete the SNAP program notice are available in the public literature, complete references for such information should be provided.

(b) The Significant New Alternatives Policy (SNAP) Information Notice is designed to provide the Agency with the information necessary to reach a decision on the acceptability of a substitute.

(1) Submitters requesting review under the SNAP program should send the completed SNAP notice to: SNAP Document Control Officer, U.S. Environmental Protection Agency (6205–J), 1200 Pennsylvania Ave., NW., Washington, DC 20460.

(2) Submitters filing jointly under SNAP and the Premanufacture Notice Program (PMN) should send the SNAP addendum along with the PMN form to: PMN Document Control Officer, U.S. Environmental Protection Agency (7407), 1200 Pennsylvania Ave., NW., Washington, DC 20460. Submitters must also send both documents to the SNAP program, with a reference to indicate the notice has been furnished to the Agency under the PMN program. Submitters providing information on new chemicals for joint review under the TSCA and SNAP programs may be required to supply additional toxicity data under TSCA section 5.

(3) Submitters filing jointly under SNAP and under the Federal Insecticide, Fungicide, and Rodenticide Act should send the SNAP form to the Office of Pesticide Programs, Registration Division, (7505C) 1200 Pennsylvania Ave., NW., Washington, DC 20460, as well as to the SNAP Document Control Officer.

§ 82.180 Agency review of SNAP submissions.

(a) *Processing of SNAP notices*—(1) *90–day review process*. The 90-day review process will begin once EPA receives a submission and determines that such submission includes data on the substitute that are complete and adequate, as described in § 82.178. The Agency may suspend or extend the review period to allow for submission of additional data needed to complete the review of the notice.

(2) *Initial review of notice*. The SNAP Document Control Officer will review the notice to ensure that basic information necessary to process the submission is present (i.e., name of company, identification of substitute, etc.). The SNAP Document Control Officer will also review substantiation of any claim of confidentiality.

(3) *Determination of data adequacy*. Upon receipt of the SNAP submission, the Agency will review the completeness of the information supporting the application. If additional data are needed, the submitter will be contacted following completion of this review. The 90-day review period will not commence until EPA has received data it judges adequate to support analysis of the submission.

(4) *Letter of receipt*. The SNAP Document Control Officer will send a letter of receipt to the submitter to confirm the date of notification and the beginning of EPA's 90-day review period. The SNAP Document Control Officer will also assign the SNAP notice a tracking number, which will be identified in the letter of receipt.

(5) *Availability of new information during review period*. If critical new information becomes available during the review period that may influence the Agency's evaluation of a substitute, the submitter must notify the Agency about the existence of such information within 10 days of learning of such data. The submitter must also inform the Agency of new studies underway, even if the results will not be available within the 90-day review period. The Agency may contact the submitter to

explore extending or suspending the review period depending on the type of information received and the stage of review.

(6) *Completion of detailed review*. Once the initial data review, described in paragraphs (a)(2) and (3) of this section, has been completed, the Agency will complete a detailed evaluation of the notice. If during any time the Agency perceives a lack of information necessary to reach a SNAP determination, it will contact the submitter and request the missing data.

(7) *Criteria for review*. To determine whether a substitute is acceptable or unacceptable as a replacement for class I or II compounds, the Agency will evaluate:

(i) Atmospheric effects and related health and environmental impacts;

(ii) General population risks from ambient exposure to compounds with direct toxicity and to increased ground-level ozone;

(iii) Ecosystem risks;

(iv) Occupational risks;

(v) Consumer risks;

(vi) Flammability; and

(vii) Cost and availability of the substitute.

(8) *Communication of decision*—(i) *Communication of decision to the submitter*. Once the SNAP program review has been completed, the Agency will notify the submitter in writing of the decision. Sale or manufacture of new substitutes may commence after the initial 90-day notification period expires even if the Agency fails to reach a decision within the 90-day review period or fails to communicate that decision or the need for additional data to the submitter. Sale or manufacture of existing substitutes may continue throughout the Agency's 90-day review.

(ii) *Communication of decision to the public*. The Agency will publish in the FEDERAL REGISTER periodic updates to the list of the acceptable and unacceptable alternatives that have been reviewed to date. In the case of substitutes proposed as acceptable with use restrictions, proposed as unacceptable or proposed for removal from either list, a rulemaking process will ensue. Upon completion of such rulemaking, EPA will publish revised lists of substitutes acceptable subject to use conditions or narrowed use limits and unacceptable substitutes to be incorporated into the Code of Federal Regulations. (See Appendices to this subpart.)

(b) *Types of listing decisions*. When reviewing substitutes, the Agency will list substitutes in one of five categories:

(1) *Acceptable*. Where the Agency has reviewed a substitute and found no reason to prohibit its use, it will list the alternative as acceptable for the end-uses listed in the notice.

(2) *Acceptable subject to use conditions*. After reviewing a notice, the Agency may make a determination that a substitute is acceptable only if conditions of use are met to minimize risks to human health and the environment. Where users intending to adopt a substitute acceptable subject to use conditions must make reasonable efforts to ascertain that other alternatives are not feasible due to safety, performance or technical reasons, documentation of this assessment must be retained on file for the purpose of demonstrating compliance. This documentation shall include descriptions of substitutes examined and rejected, processes or products in which the substitute is needed, reason for rejection of other alternatives, e.g., performance, technical or safety standards. Use of such substitutes in ways that are inconsistent with such use conditions renders them unacceptable.

(3) *Acceptable subject to narrowed use limits*. Even though the Agency can restrict the use of a substitute based on the potential for adverse effects, it may be necessary to permit a narrowed range of use within a sector end-use because of the lack of alternatives for specialized applications. Users intending to adopt a substitute acceptable with narrowed use limits must ascertain that other alternatives are not technically feasible. Companies must document the results of their evaluation, and retain the results on file for the purpose of demonstrating compliance. This documentation shall include descriptions of substitutes examined and rejected, processes or products in which the substitute is needed, reason for rejection of other alternatives, e.g.,

performance, technical or safety standards, and the anticipated date other substitutes will be available and projected time for switching to other available substitutes. Use of such substitutes in applications and end-uses which are not specified as acceptable in the narrowed use limit renders them unacceptable.

(4) *Unacceptable*. This designation will apply to substitutes where the Agency's review indicates that the substitute poses risk of adverse effects to human health and the environment and that other alternatives exist that reduce overall risk.

(5) *Pending*. Submissions for which the Agency has not reached a determination will be described as pending. For all substitutes in this category, the Agency will work with the submitter to obtain any missing information and to determine a schedule for providing the missing information if the Agency wishes to extend the 90-day review period. EPA will use the authority under section 114 of the Clean Air Act to gather this information, if necessary. In some instances, the Agency may also explore using additional statutory provisions (e.g., section 5 of TSCA) to collect the needed data.

(c) *Joint processing under SNAP and TSCA*. The Agency will coordinate reviews of substitutes submitted for evaluation under both the TSCA PMN program and the CAA.

(d) *Joint processing under SNAP and FIFRA*. The Agency will coordinate reviews of substitutes submitted for evaluation under both FIFRA and the CAA.

[59 FR 13147, Mar. 18, 1994, as amended at 61 FR 25592, May 22, 1996; 61 FR 54039, Oct. 16, 1996]

§ 82.182 Confidentiality of data.

(a) *Clean Air Act provisions*. Anyone submitting information must assert a claim of confidentiality at the time of submission for any data they wish to have treated as confidential business information (CBI) under 40 CFR part 2, subpart B. Failure to assert a claim of confidentiality at the time of submission may result in disclosure of the information by the Agency without further notice to the submitter. The submitter should also be aware that under section 114(c), emissions data may not be claimed as confidential.

(b) *Substantiation of confidentiality claims*. At the time of submission, EPA requires substantiation of any confidentiality claims made. Failure to provide any substantiation may result in disclosure of information without further notice by the Agency. All submissions must include adequate substantiation in order for an acceptability determination on a substitute to be published. Moreover, under 40 CFR part 2, subpart B, there are further instances in which confidentiality assertions may later be reviewed even when confidentiality claims are initially received. The submitter will also be contacted as part of such an evaluation process.

(c) *Confidentiality provisions for toxicity data*. In the event that toxicity or health and safety studies are listed as confidential, this information cannot be maintained as confidential where such data are also submitted under TSCA or FIFRA, to the extent that confidential treatment is prohibited under those statutes. However, information contained in a toxicity study that is not health and safety data and is not relevant to the effects of a substance on human health and the environment (e.g., discussion of process information, proprietary blends) can be maintained as confidential subject to 40 CFR part 2, subpart B.

(d) *Joint submissions under other statutes*. Information submitted as part of a joint submission to either SNAP/TSCA or SNAP/FIFRA must adhere to the security provisions of the program offices implementing these statutes. For such submissions, the SNAP handling of such notices will follow the security provisions under these statutes.

§ 82.184 Petitions.

(a) *Who may petition*. Any person may petition the Agency to amend existing listing decisions under the SNAP program, or to add a new substance to any of the SNAP lists.

(b) *Types of petitions*. Five types of petitions exist:

(1) Petitions to add a substitute not previously reviewed under the SNAP program to the acceptable list. This type of petition is comparable to the

90-day notifications, except that it would generally be initiated by entities other than the companies that manufacture, formulate, or otherwise use the substitute. Companies that manufacture, formulate, or use substitutes that want to have their substitutes added to the acceptable list should submit information on the substitute under the 90-day review program;

(2) Petitions to add a substitute not previously reviewed under the SNAP program to the unacceptable list;

(3) Petitions to delete a substitute from the acceptable list and add it to the unacceptable list or to delete a substitute from the unacceptable and add it to the acceptable list;

(4) Petitions to add or delete use restrictions on an acceptability listing.

(5) Petitions to grandfather use of a substitute listed as unacceptable or acceptable subject to use restrictions.

(c) *Content of the petition.* The Agency requires that the petitioner submit information on the type of action requested and the rationale for the petition. Petitions in paragraphs (b)(1) and (2) of this section must contain the information described in § 82.178, which lists the items to be submitted in a 90-day notification. For petitions that request the re-examination of a substitute previously reviewed under the SNAP program, the submitter must also reference the prior submittal or existing listing. Petitions to grandfather use of an unacceptable substitute must describe the applicability of the test to judge the appropriateness of Agency grandfathering as established by the United States District Court for the District of Columbia Circuit (see *Sierra Club* v. *EPA*, 719 F.2d 436 (D.C. Cir. 1983)). This test includes whether the new rule represents an abrupt departure from previously established practice, the extent to which a party relied on the previous rule, the degree of burden which application of the new rule would impose on the party, and the statutory interest in applying the new rule immediately.

(d) *Petition process.* (1) Notification of affected companies. If the petition concerns a substitute previously either approved or restricted under the SNAP program, the Agency will contact the original submitter of that substitute.

(2) *Review for data adequacy.* The Agency will review the petition for adequacy of data. As with a 90-day notice, the Agency may suspend review until the petitioner submits the information necessary to evaluate the petition. To reach a timely decision on substitutes, EPA may use collection authorities such as those contained in section 114 of the Clean Air Act as amended, as well as information collection provisions of other environmental statutes.

(3) *Review procedures.* To evaluate the petition, the Agency may submit the petition for review to appropriate experts inside and outside the Agency.

(4) *Timing of determinations.* If data are adequate, as described in § 82.180, the Agency will respond to the petition within 90 days of receiving a complete petition. If the petition is inadequately supported, the Agency will query the petitioner to fill any data gaps before the 90-day review period begins, or may deny the petition because data are inadequate.

(5) *Rulemaking procedures.* EPA will initiate rulemaking whenever EPA grants a petition to add a substance to the list of unacceptable substitutes, remove a substance from any list, or change or create an acceptable listing by imposing or deleting use conditions or use limits.

(6) *Communication of decision.* The Agency will inform petitioners within 90 days of receiving a complete petition whether their request has been granted or denied. If a petition is denied, the Agency will publish in the FEDERAL REGISTER an explanation of the determination. If a petition is granted, the Agency will publish the revised SNAP list incorporating the final petition decision within 6 months of reaching a determination or in the next scheduled update, if sooner, provided any required rulemaking has been completed within the shorter period.

Appendix A to Subpart G of Part 82—Substitutes Subject to Use Restrictions and Unacceptable Substitutes

Refrigerants

Unacceptable Substitutes

End-use	Substitute	Decision	Comments
CFC-11 centrifugal chillers (retrofit).	HCFC-141b	Unacceptable	Has a high ODP relative to other alternatives.
CFC-12 centrifugal chillers (retrofit).	HCFC-22/HFC-142b/CFC-12.	Unacceptable	As a blend of both Class I and Class II substances, it has a higher ODP than use of Class II substances.
	Hydrocarbon blend A	Unacceptable	Flammability is a serious concern. Data have not been submitted to demonstrate it can used safely in this end-use.
CFC-11, CFC-12, CFC-113, CFC-114, R-500 centrifugal chillers (new equipment/NIKs).	HCFC-22/HFC-142b/CFC-12.	Unacceptable	As a blend of both Class I and Class II substances, it has a higher ODP than use of Class II substances.
	Hydrocabon blend A	Unacceptable	Flammability is a serious concern. Data have not been submitted to demonstrate it can be used safely in this end-use.
	HCFC-141b	Unacceptable	Has a high ODP relative to other alternatives.
CFC-12 reciprocating chillers (retrofit).	HCFC-22/HFC-142b/CFC-12.	Unacceptable	As a blend of both Class I and Class II substances, it has a higher ODP than use of Class II substances.
	Hydrocarbon blend A	Unacceptable	Flammability is a serious concern. Data have not been submitted to demonstrate it can be used safely in this end-use.
CFC-12 reciprocating chillers (new equipment/NIKs).	HCFC-22/HFC-142b/CFC-12.	Unacceptable	As a blend of both Class I and Class II substances, it has a higher ODP than use of Class II substances.
	Hydrocarbon blend A	Unacceptable	Flammability is a serious concern. Data have not been submitted to demonstrate it can be used safely in this end-use.
CFC-11, CFC-12, R-502 industrial process refrigeration (retrofit).	HCFC-22/HFC-142b/CFC-12.	Unacceptable	As a blend of both Class I and Class II substances, it has a higher ODP than use of Class II substances.
CFC-11, CFC-12, R-502 industrial process refrigeration (new equipment/NIKs).	HCFC-22/HFC-142b/CFC-12.	Unacceptable	As a blend of both Class I and Class II substances, it has a higher ODP than use of Class II substances.
CFC-12, R-502 ice skating rinks (retrofit).	HCFC-22/HFC-142b/CFC-12.	Unacceptable	As a blend of both Class I and Class II substances, it has a higher ODP than use of Class II substances.
	Hydrocarbon blend A	Unacceptable	Flammability is a serious concern. Data have not been submitted to demonstrate it can be used safely in this end-use.
CFC-12, R-502 ice skating rinks (new equipment/NIKs).	HCFC-22/HFC-142b/CFC-12.	Unacceptable	As a blend of both Class I and Class II substances, it has a higher ODP than use of Class II substances.
	Hydrocarbon blend A	Unacceptable	Flammability is a serious concern. Data have not been submitted to demonstrate it can be used safely in this end-use.
CFC-12, R-502 cold storage warehouses (retrofit).	HCFC-22/HFC-142b/CFC-12.	Unacceptable	As a blend of both Class I and Class II substances, it has a higher ODP than use of Class II substances.
	Hydrocarbon blend A	Unacceptable	Flammability is a serious concern. Data have not been submitted to demonstrate it can be used safely in this end-use.
CFC-12, R-502 cold storage warehouses (new equipment/NIKs).	HCFC-22/HFC-142b/CFC-12.	Unacceptable	As a blend of both Class I and Class II substances, it has a higher ODP than use of Class II substances.
	Hydrocarbon blend A	Unacceptable	Flammability is a serious concern. Data have not been submitted to demonstrate it can be used safely in this end-use.
CFC-12, R-500, R-502 refrigerated transport (retrofit).	HCFC-22/HFC-142b/CFC-12.	Unacceptable	As a blend of both Class I and Class II substances, it has a higher ODP than use of Class II substances.
	Hydrocarbon blend A	Unacceptable	Flammability is a serious concern. Data have not been submitted to demonstrate it can be used safely in this end-use.

REFRIGERANTS—Continued

Unacceptable Substitutes

End-use	Substitute	Decision	Comments
CFC-12, R-500, R-502 refrigerated transport (new equipment/NIKs).	HCFC-22/HFC-142b/CFC-12.	Unacceptable	As a blend of both Class I and Class II substances, it has a higher ODP than use of Class II substances.
	Hydrocarbon blend A	Unacceptable	Flammability is a serious concern. Data have not been submitted to demonstrate it can be used safely in this end-use.
CFC-12, R-502 retail food refrigeration (retrofit).	HCFC-22/HFC-142b/CFC-12.	Unacceptable	As a blend of both Class I and Class II substances, it has a higher ODP than use of Class II substances.
	Hydrocarbon blend A	Unacceptable	Flammability is a serious concern. Data have not been submitted to demonstrate it can be used safely in this end-use.
CFC-12, R-502 retail food refrigeration (new equipment/NIKs).	HCFC-22/HFC-142b/CFC-12.	Unacceptable	As a blend of both Class I and Class II substances, it has a higher ODP than use of Class II substances.
	Hydrocarbon blend A	Unacceptable	Flammability is a serious concern. Data have not been submitted to demonstrate it can be used safely in this end-use.
CFC-12, R-502 commercial ice machines (retrofit).	HCFC-22/HFC-142b/CFC-12.	Unacceptable	As a blend of both Class I and Class II substances, it has a higher ODP than use of Class II substances.
	Hydrocarbon blend A	Unacceptable	Flammability is a serious concern. Data have not been submitted to demonstrate it can be used safely in this end-use.
CFC-12, R-502 commercial ice machines (new equipment/NIKs).	HCFC-22/HFC-142b/CFC-12.	Unacceptable	As a blend of both Class I and Class II substances, it has a higher ODP than use of Class II substances.
	Hydrocarbon blend A	Unacceptable	Flammability is a serious concern. Data have not been submitted to demonstrate it can be used safely in this end-use.
CFC-12 vending machines (retrofit).	HCFC-22/HFC-142b/CFC-12.	Unacceptable	As a blend of both Class I and Class II substances, it has a higher ODP than use of Class II substances.
	Hydrocarbon blend A	Unacceptable	Flammability is a serious concern. Data have not been submitted to demonstrate it can be used safely in this end-use.
CFC-12 vending machines (new equipment/NIKs).	HCFC-22/HFC-142b/CFC-12.	Unacceptable	As a blend of both Class I and Class II substances, it has a higher ODP than use of Class II substances.
	Hydrocarbon blend A	Unacceptable	Flammability is a serious concern. Data have not been submitted to demonstrate it can be used safely in this end-use.
CFC-12, water coolers (retrofit).	HCFC-22/HFC-142b/CFC-12.	Unacceptable	As a blend of both Class I and Class II substances, it has a higher ODP than use of Class II substances.
	Hydrocarbon blend A	Unacceptable	Flammability is a serious concern. Data have not been submitted to demonstrate it can be used safely in this end-use.
CFC-12, water coolers (New equipment/NIKs).	HCFC-22/HFC-142b/CFC-12.	Unacceptable	As a blend of both Class I and Class II substances, it has a higher ODP than use of Class II substances.
	Hydrocarbon blend A	Unacceptable	Flammability is a serious concern. Data have not been submitted to demonstrate it can be used safely in this end-use.
CFC-12, household refrigerators (retrofit).	HCFC-22/HFC-142b/CFC-12.	Unacceptable	As a blend of both Class I and Class II substances, it has a higher ODP than use of Class II substances.
	Hydrocarbon blend A	Unacceptable	Flammability is a serious concern. Data have not been submitted to demonstrate it can be used safely in this end-use.
CFC-12, household refrigerators (new equipment/NIKs).	HCFC-22/HFC-142b/CFC-12.	Unacceptable	As a blend of both Class I and Class II substances, it has a higher ODP than use of Class II substances.
	Hydrocarbon blend A	Unacceptable	Flammability is a serious concern. Data have not been submitted to demonstrate it can be used safely in this end-use.
CFC-12, R-502 household freezers (retrofit).	HCFC-22/HFC-142b/CFC-12.	Unacceptable	As a blend of both Class I and Class II substances, it has a higher ODP than use of Class II substances.

REFRIGERANTS—Continued

Unacceptable Substitutes

End-use	Substitute	Decision	Comments
	Hydrocarbon blend A	Unacceptable	Flammability is a serious concern. Data have not been submitted to demonstrate it can be used safely in this end-use.
CFC-12, 502 household freezers (new equipment/NIKs).	HCFC-22/HFC-142b/ CFC-12.	Unacceptable	As a blend of both Class I and Class II substances, it has a higher ODP than use of Class II substances.
	Hydrocarbon blend A	Unacceptable	Flammability is a serious concern. Data have not been submitted to demonstrate it can be used safely in this end-use.
CFC-12, R-500 residential dehumidifiers (retrofit).	HCFC-22/HFC-142b/ CFC-12.	Unacceptable	As a blend of both Class I and Class II substances, it has a higher ODP than use of Class II substances.
	Hydrocarbon blend A	Unacceptable	Flammability is a serious concern. Data have not been submitted to demonstrate it can be used safely in this end-use.
CFC-12, R-500 residential dehumidifiers (new equipment/NIKs).	HCFC-22/HFC-142b/ CFC-12.	Unacceptable	As a blend of both Class I and Class II substances, it has a higher ODP than use of Class II substances.
	Hydrocarbon blend A	Unacceptable	Flammability is a serious concern. Data have not been submitted to demonstrate it can be used safely in this end-use.
CFC-12, motor vehicle air conditioners (retrofit).	HCFC-22/HFC-142b/ CFC-12.	Unacceptable	As a blend of both Class I and Class II substances, it has a higher ODP than use of Class II substances.
	Hydrocarbon blend A	Unacceptable	Flammability is a serious concern. Data have not been submitted to demonstrate it can be used safely in this end-use.
CFC-12, motor vehicle air conditioners (new equipment/NIKs).	HCFC-22/HFC-142b/ CFC-12.	Unacceptable	As a blend of both Class I and Class II substances, it has a higher ODP than use of Class II substances.
	Hydrocarbon blend A	Unacceptable	Flammability is a serious concern. Data have not been submitted to demonstrate it can be sued safely in this end-use.

FOAMS

Unacceptable Substitutes

End-use	Substitute	Decision	Comments
CFC-11 Polyolefin	HCFC-141b (or blends thereof).	Unacceptable	HCFC-141b has an ODP of 0.11, almost equivalent to that of methyl chloroform, a Class I substance. The Agency believes that non-ODP alternatives are sufficiently available to render the use of HCFC-141b unnecessary in polyolefin foams.

SUBSTITUTES ACCEPTABLE SUBJECT TO NARROWED USE LIMITS

End-use	Substitute	Decision	Comments
Electronics cleaning w/ CFC-113, MCF.	Perfluoro-carbons (C5F12, C6F12, C6F14, C7F16, C8F18, C5F11NO, C6F13NO, C7F15NO, and C8F16).	Acceptable for high-performance, precision-engineered applications only where reasonable efforts have been made to ascertain that other alternatives are not technically feasible due to performance or safety requirements.	The principal environmental characteristic of concern for PFCs is that they have long atmospheric lifetimes and high global warming potentials. Although actual contributions to global warming depend upon the quantities of PFCs emitted, the effects are for practical purposes irreversible. Users must observe this limitation on PFC acceptability by conducting a reasonable evaluation of other substitutes to determine that PFC use is necessary to meet performance or safety requirements. Documentation of this evaluation must be kept on file. For additional guidance regarding applications in which PFCs may be appropriate, users should consult the Preamble for this rulemaking.

SUBSTITUTES ACCEPTABLE SUBJECT TO NARROWED USE LIMITS—Continued

End-use	Substitute	Decision	Comments
Precision cleaning w/ CFC-113, MCF.	Perfluoro-carbons (C5F12, C6F12, C6F14, C7F16, C8F18, C5F11NO, C6F13NO, C7F15NO, and C8F16).	Acceptable for high-performance, precision-engineered applications only where reasonable efforts have been made to ascertain that other alternatives are not technically feasible due to performance or safety requirements.	The principal environmental characteristic of concern for PFCs is that they have long atmospheric lifetimes and high global warming potentials. Although actual contributions to global warming depend upon the quantities of PFCs emitted, the effects are for practical purposes irreversible. Users must observe this limitation on PFC acceptability by conducting a reasonable evaluation of other substitutes to determine that PFC use is necessary to meet performance or safety requirements. Documentation of this evaluation must be kept on file. For additional guidance regarding applications in which PFCs may be appropriate, users should consult the Preamble for this rulemaking.

UNACCEPTABLE SUBSTITUTES

End-use	Substitute	Decision	Comments
Metals cleaning w/CFC-113.	HCFC 141b and its blends.	Unacceptable	High ODP; other alternatives exist. Effective date: As of 30 days after final rule for uses in new equipment (including retrofits made after the effective date); as of January 1, 1996, for uses in existing equipment. EPA will grant, if necessary, narrowed use acceptability listings for CFC-113 past the effective date of the prohibition.
Metals cleaning w/MCF ..	HCFC 141b and its blends.	Unacceptable	High ODP; other alternatives exist. Effective date: As of 30 days after final rule for uses in new equipment (including retrofits made after the effective date); as of January 1, 1996, for uses in existing equipment.
Electronics cleaning w/ CFC-113.	HCFC 141b and its blends.	Unacceptable	High ODP; other alternatives exist. Effective date: As of 30 days after final rule for uses in new equipment (including retrofits made after the effective date); as of January 1, 1996, for uses in existing equipment. EPA will grant, if necessary, narrowed use acceptability listings for CFC-113 past the effective date of the prohibition.
Electronics cleaning w/ MCF.	HCFC 141b and its blends.	Unacceptable	High ODP; other alternatives exist. Effective date: As of 30 days after final rule for uses in new equipment (including retrofits made after the effective date); as of January 1, 1996, for uses in existing equipment.
Precision cleaning w/ CFC-113.	HCFC 141b and its blends.	Unacceptable	High ODP; other alternatives exist. Effective date: As of 30 days after final rule for uses in new equipment (including retrofits made after the effective date); as of January 1, 1996, for uses in existing equipment. EPA will grant, if necessary, narrowed use acceptability listings for CFC-113 past the effective date of the prohibition.
Precision cleaning w/ MCF.	HCFC 141b and its blends.	Unacceptable	High ODP; other alternatives exist. Effective date: As of 30 days after final rule for uses in new equipment (including retrofits made after the effective date); as of January 1, 1996, for uses in existing equipment.

FIRE SUPPRESSION AND EXPLOSION PROTECTION STREAMING AGENTS

Substitutes Acceptable Subject to Narrowed Use Limits

End-use	Substitute	Decision	Conditions	Comments
Halon 1211 Streaming Agents.	[CFC Blend]	Acceptable in non-residential uses only.		Use of CFCs are controlled under CAA section 610 which bans use of CFCs in pressurized dispensers, and therefore are not permitted for use in portable fire extinguishers. EPA will list this agent as proposed unacceptable in the next SNAP proposed rulemaking. Because CFCs are a Class I substance, production will be phased out by January 1, 1996. See additional comments 1, 2.
	HBFC–22B1		Acceptable in nonresidential uses only.	Proper procedures regarding the operation of the extinguisher and ventilation following dispensing the extinguishant is recommended. Worker exposure may be a concern in small office areas. HBFC–22B1 is considered an interim substitute for Halon 1211. Because the HBFC–22B1 has an ODP of .74, production will be phased out (except for essential uses) on January 1, 1996. This agent was submitted to the Agency as a Premanufacture Notice (PMN) and is presently subject to requirements contained in a Toxic Substance Control Act (TSCA) Consent Order. See additional comments 1, 2.
	C_6F_{14}	Acceptable for non-residential uses where other alternatives are not technically feasible due to performance or safety requirements:.		Users must observe the limitations on PFC acceptability by making reasonable effort to undertake the following measures: (i) conduct an evaluation of foreseeable conditions of end use; (ii) determine that the physical or chemical properties or other technical constraints of the other available agents preclude their use; and
		a. due to the physical or chemical properties of the agent, or.		(iii) determine that human exposure to the other alternative extinguishing agents may approach or result in cardiosensitization or other unacceptable toxicity effects under normal operating conditions; Documentation of such measures must be available for review upon request.
		b. where human exposure to the extinguishing agent may approach cardiosensitization levels or result in other unacceptable health effects under normal operating conditions.		The principal environmental characteristic of concern for PFCs is that they have high GWPs and long atmospheric lifetimes. Actual contributions to global warming depend upon the quantities of PFCs emitted. For additional guidance regarding applications in which PFCs may be appropriate, users should consult the description of potential uses which is included in the preamble to this rulemaking. See additional comments 1, 2.

Additional Comments:

1—Discharge testing and training should be strictly limited only to that which is essential to meet safety or performance requirements.

2—The agent should be recovered from the fire protection system in conjunction with testing or servicing, and recycled for later use or destroyed.

FIRE SUPPRESSION AND EXPLOSION PROTECTION STREAMING AGENTS

Unacceptable Substitutes

End-use	Substitute	Decision	Comments
Halon 1211 Streaming Agents.	[CFC-11]	Unacceptable	This agent has been suggested for use on large outdoor fires for which non-ozone depleting alternatives are currently used.

[59 FR 13147, Mar. 18, 1994, as amended at 67 FR 4200, Jan. 29, 2002]

APPENDIX B TO SUBPART G OF PART 82—SUBSTITUTES SUBJECT TO USE RESTRICTIONS AND UNACCEPTABLE SUBSTITUTES

REFRIGERANTS—ACCEPTABLE SUBJECT TO USE CONDITIONS

Application	Substitute	Decision	Conditions	Comments
CFC–12 Automobile Motor Vehicle Air Conditioning (New Equipment/NIKs only).	HFC–134a	Acceptable subject to use conditions, for passenger cars and light-duty trucks manufactured for Model Year 2020 or earlier, and for vehicles other than passenger cars or light-duty trucks.	—must be used with unique fittings. —must be used with detailed labels.	EPA is concerned that the existence of several substitutes in this end-use may increase the likelihood of significant refrigerant cross-contamination and potential failure of both air conditioning systems and recovery/recycling equipment.
CFC–12 Automobile Motor Vehicle Air Conditioning (New Equipment/NIKs only).	HCFC Blend Beta (R–416A).	Acceptable subject to use conditions, for passenger cars and light-duty trucks manufactured for Model Year 2016 or earlier, and for vehicles other than passenger cars or light-duty trucks.	—must be used with unique fittings. —must be used with detailed labels.	EPA is concerned that the existence of several substitutes in this end-use may increase the likelihood of significant refrigerant cross-contamination and potential failure of both air conditioning systems and recovery/recycling equipment.
CFC–12 Automobile Motor Vehicle Air Conditioning (New Equipment/NIKs only).	R–401C	Acceptable subject to use conditions.	—must be used with unique fittings. —must be used with detailed labels.	EPA is concerned that the existence of several substitutes in this end-use may increase the likelihood of significant refrigerant cross-contamination and potential failure of both air conditioning systems and recovery/recycling equipment.
CFC–12 Automobile Motor Vehicle Air Conditioning (Retrofit Equipment only).	HFC–134a, R–401C, HCFC Blend Beta (R–416A).	Acceptable subject to use conditions.	—must be used with unique fittings. —must be used with detailed labels. —all CFC–12 must be removed from the system prior to retrofitting. Refer to the text for a full description.	EPA is concerned that the existence of several substitutes in this end-use may increase the likelihood of significant refrigerant cross-contamination and potential failure of both air conditioning systems and recovery/recycling equipment. No distinction is made between ''retrofit'' and ''drop-in'' refrigerants; retrofitting a car to use a new refrigerant includes all procedures that result in the air conditioning system using a new refrigerant.

REFRIGERANTS—ACCEPTABLE SUBJECT TO USE CONDITIONS—Continued

Application	Substitute	Decision	Conditions	Comments
CFC–12 Automobile Motor Vehicle Air Conditioning (New equipment only).	R-152a as a substitute for CFC–12.	Acceptable subject to use conditions.	Engineering strategies and/or devices shall be incorporated into the system such that foreseeable leaks into the passenger compartment do not result in R-152a concentrations of 3.7% v/v or above in any part of the free space1inside the passenger compartment for more than 15 seconds when the car ignition is on. Manufacturers must adhere to all the safety requirements listed in the Society of Automotive Engineers (SAE) Standard J639 (adopted 2011), including unique fittings and a flammable refrigerant warning label as well as SAE Standard J2773 (adopted February 2011).	Additional training for service technicians recommended. Manufacturers should conduct and keep on file failure mode and Effect Analysis (FMEA) on the MVAC as stated in SAE J1739.
CFC-12 Automobile Motor Vehicle Air Conditioning (New equipment in passenger cars and light-duty trucks only).	HFO-1234yf as a substitute for CFC-12.	Acceptable subject to use conditions.	Manufacturers must adhere to all of the safety requirements listed in the Society of Automotive Engineers (SAE) Standard J639 (adopted 2011), including requirements for: unique fittings, flammable refrigerant warning label, high-pressure compressor cut-off switch and pressure relief devices. For connections with refrigerant containers for use in professional servicing (that is, service for consideration, consistent with subpart B to 40 CFR part 82), use fittings consistent with SAE J2844 (revised October 2011).	Additional training for service technicians recommended. Observe requirements of Significant New Use Rule at 40 CFR 721.10182. HFO-1234yf is also known as 2,3,3,3-tetrafluoro-prop-1-ene (CAS No 754–12–1). Refrigerant containers of HFO-1234yf for use in professional servicing are from 5 lbs (2.3 L) to 50 lbs (23 L) in size. Requirements for handling, storage, and transportation of compressed gases apply to this refrigerant, such as regulations of the Occupational Safety and Health Administration at 29 CFR 1910.101 and the Department of Transportation's requirements at 49 CFR 171–179.
			Manufacturers must conduct Failure Mode and Effect Analysis (FMEA) as provided in SAE J1739 (adopted 2009). Manufacturers must keep the FMEA on file for at least three years from the date of creation.	Requirements for handling, storage, and transportation of compressed gases apply to this refrigerant, such as regulations of the Occupational Safety and Health Administration at 29 CFR 1910.101 and the Department of Transportation's requirements at 49 CFR 171–179.
CFC–12 Motor Vehicle Air Conditioning (New equipment only).	Carbon dioxide (CO_2) as a substitute for CFC–12.	Acceptable subject to use conditions.	Engineering strategies and/or mitigation devices shall be incorporated such that in the event of refrigerant leaks, the resulting CO_2 concentrations do not exceed:	Additional training for service technicians is recommended.
			The short term exposure level (STEL) of 3% or 30,000 ppm averaged over 15 minutes in the passenger free space [1]; and; The ceiling limit of 4% or 40,000 ppm in the passenger breathing zone.[2]	In designing risk mitigation strategies and/or devices, manufacturers should factor in background CO_2 concentrations in the passenger cabin potentially contributed from normal respiration by the maximum number of vehicle occupants.

REFRIGERANTS—ACCEPTABLE SUBJECT TO USE CONDITIONS—Continued

Application	Substitute	Decision	Conditions	Comments
			Vehicle manufacturers must keep records of the tests performed for a minimum period of three years demonstrating that CO_2 refrigerant levels do not exceed the STEL of 3% averaged over 15 minutes in the passenger free space, and the ceiling limit of 4% in the breathing zone.	Use of the standards SAE J1052, SAE J2772, and SAE J2773 is recommended as additional reference.
			The use of CO_2 in MVAC systems must adhere to the standard conditions identified in SAE Standard J639 (2011 version) including: Installation of a high pressure system warning label; Installation of a compressor cut-off switch; and Use of unique fittings with: Outside diameter of 16.6 +0/−0.2 mm (0.6535 +0/−0.0078 inches) for the MVAC low-side; Outside diameter of 18.1 +0/−0.2 mm (0.7126 +0/−0.0078 inches) for the MVAC high-side; and Outside diameter of 20.955 +0/−0.127 mm (0.825 +0/−0.005 inches) and right-hand thread direction for CO_2 refrigerant service containers.[3]	Manufacturers should conduct and keep on file Potential Failure Mode and Effects Analysis in Design [Design FMEA], Potential Failure Mode and Effect Analysis in Manufacturing and Assembly Process [Process FMEA] on the MVAC as stated in SAE J1739.
Motor vehicle air conditioning (newly manufactured medium-duty passenger vehicles).	HFO-1234yf	Acceptable subject to use conditions.	As of January 3, 2017: ..... (1) HFO-1234yf MVAC systems must adhere to all of the safety requirements of SAE J639 (adopted 2011), including requirements for a flammable refrigerant warning label, high-pressure compressor cutoff switch and pressure relief devices, and unique fittings. For connections with refrigerant containers for use in professional servicing, use fittings must be consistent with SAE J2844 (revised October 2011). (2) Manufacturers must conduct Failure Mode and Effect Analysis (FMEA) as provided in SAE J1739 (adopted 2009). Manufacturers must keep the FMEA on file for at least three years from the date of creation.	Additional training for service technicians recommended. HFO-1234yf is also known as 2,3,3,3-tetrafluoro-prop-1-ene (CAS. Reg. No. 754–12–1).

REFRIGERANTS—ACCEPTABLE SUBJECT TO USE CONDITIONS—Continued

Application	Substitute	Decision	Conditions	Comments
Motor vehicle air conditioning (newly manufactured heavy-duty pickup trucks).	HFO-1234yf	Acceptable subject to use conditions.	As of January 3, 2017: ..... (1) HFO-1234yf MVAC systems must adhere to all of the safety requirements of SAE J639 (adopted 2011), including requirements for a flammable refrigerant warning label, high-pressure compressor cutoff switch and pressure relief devices, and unique fittings. For connections with refrigerant containers for use in professional servicing, use fittings must be consistent with SAE J2844 (revised October 2011). (2) Manufacturers must conduct Failure Mode and Effect Analysis (FMEA) as provided in SAE J1739 (adopted 2009). Manufacturers must keep the FMEA on file for at least three years from the date of creation.	Additional training for service technicians recommended. HFO-1234yf is also known as 2,3,3,3-tetrafluoro-prop-1-ene (CAS No 754–12–1).
Motor vehicle air conditioning (newly manufactured complete heavy-duty vans only).	HFO-1234yf	Acceptable subject to use conditions.	As of January 3, 2017: ..... (1) HFO-1234yf MVAC systems must adhere to all of the safety requirements of SAE J639 (adopted 2011), including requirements for a flammable refrigerant warning label, high-pressure compressor cutoff switch and pressure relief devices, and unique fittings. For connections with refrigerant containers for use in professional servicing, use fittings must be consistent with SAE J2844 (revised October 2011). (2) Manufacturers must conduct Failure Mode and Effect Analysis (FMEA) as provided in SAE J1739 (adopted 2009). Manufacturers must keep the FMEA on file for at least three years from the date of creation.	Additional training for service technicians recommended. HFO-1234yf is also known as 2,3,3,3-tetrafluoro-prop-1-ene (CAS No 754–12–1). HFO-1234yf is acceptable for complete heavy-duty vans. Complete heavy-duty vans are not altered by a secondary or tertiary manufacturer.

[1] Free space is defined as the space inside the passenger compartment excluding the space enclosed by the ducting in the HVAC module.

[2] Area inside the passenger compartment where the driver's and passengers' heads are located during a normal sitting position. Refer to SAE J1052 for information on determining passenger head position.

[3] The refrigerant service containers fitting requirement applies only to refrigerant service containers used during servicing of the MVAC, in accordance with the provisions established for MVAC servicing under 40 CFR part 82, subpart B.

NOTE 1: The Director of the Federal Register approves the incorporation by reference of the material under ''Conditions'' in the table ''REFRIGERANTS—ACCEPTABLE SUBJECT TO USE CONDITIONS'' (5 U.S.C. 552(a) and 1 CFR part 51). You may obtain a copy from SAE Customer Service, 400 Commonwealth Drive, Warrendale, PA 15096–0001 USA; email: *CustomerService@sae.org*; Telephone: 1–877–606–7323 (U.S. and Canada only) or 1–724–776–4970 (outside the U.S. and Canada); Internet address: *http://store.sae.org/dlabout.htm*. You may inspect a copy at U.S. EPA's Air Docket; EPA West Building, Room 3334; 1301 Constitution Ave. NW., Washington, DC, or at the National Archives and Records Administration (NARA). For questions regarding access to these standards, the telephone number of EPA's Air Docket is 202–566–1742. For information on the availability of this material at NARA, call 202–741–6030, or go to: *http://www.archives.gov/federal_register/code_of_federal_regulations/ibr_locations.html*.

REFRIGERANTS—ACCEPTABLE SUBJECT TO NARROWED USE LIMITS

End-use	Substitute	Decision	Comments
CFC-11, CFC-12, CFC-113, CFC-114, CFC-115 Non-Mechanical Heat Transfer, New.	C_3F_8, C_4F_{10}, C_5F_{12}, $C_5F_{11}NO$, C_6F_{14}, $C_6F_{13}NO$, C_7F_{16}, $C_7F_{15}NO$, C_8F_{18}, $C_8F_{16}O$, and $C_9F_{21}N$.	Acceptable only where no other alternatives are technically feasible due to safety or performance requirements.	Users must observe the limitations on PFC acceptability by determining that the physical or chemical properties or other technical constraints of the other available agents preclude their use. Documentation of such measures must be available for review upon request. The principal environmental characteristic of concern for PFCs is that they have high GWPs and long atmospheric lifetimes. EPA strongly recommends recovery and recycling of these substitutes.
Motor vehicle air conditioning (new equipment in passenger cars and light-duty trucks only).	HFC–134a	Acceptable for use in Model Year (MY) 2021 through MY 2025 passenger cars and light-duty trucks destined for export, where reasonable efforts have been made to ascertain that other alternatives are not technically feasible because of lack of infrastructure for servicing with alternative refrigerants in the destination country.	Vehicle manufacturers must document their determination that the infrastructure is not in place for each country to which they plan to export vehicles and must retain the documentation in their files for at least five years after date of its creation for the purpose of demonstrating compliance. Documentation is to include descriptions of: • Products in which the substitute is needed; • Substitutes examined and rejected for the destination country; • Reason for rejection of other alternatives; and • Anticipated date other substitutes will be available and projected date of transition in the destination country.

REFRIGERANTS—UNACCEPTABLE SUBSTITUTES

End-use	Substitute	Decision	Comments
CFC-11, CFC-12, CFC-113, CFC-114, R-500 Centrifugal Chillers (Retrofit and New Equipment/NIKs).	R-405A	Unacceptable	R-405A contains R-c318, a PFC, which has an extremely high GWP and lifetime. Other substitutes exist which do not contain PFCs.
	Hydrocarbon Blend B	Unacceptable	Flammability is a serious concern. Data have not been submitted to demonstrate it can be used safely in this end-use.
CFC-12 Reciprocating Chillers (Retrofit and New Equipment/NIKs).	R-405A	Unacceptable	R-405A contains R-c318, a PFC, which has an extremely high GWP and lifetime. Other substitutes exist which do not contain PFCs.
	Hydrocarbon Blend B	Unacceptable	Flammability is a serious concern. Data have not been submitted to demonstrate it can be used safely in this end-use.
CFC-11, CFC-12, R-502 Industrial Process Refrigeration (Retrofit and New Equipment/NIKs).	R-403B	Unacceptable	R-403B contains R-218, a PFC, which has an extremely high GWP and lifetime. Other substitutes exist which do not contain PFCs.

REFRIGERANTS—UNACCEPTABLE SUBSTITUTES—Continued

End-use	Substitute	Decision	Comments
	R-405A	Unacceptable	R-405A contains R-c318, a PFC, which has an extremely high GWP and lifetime. Other substitutes exist which do not contain PFCs.
CFC-12, R-502 Ice Skating Rinks (Retrofit and New Equipment/NIKs).	R-405A	Unacceptable	R-405A contains R-c318, a PFC, which has an extremely high GWP and lifetime. Other substitutes exist which do not contain PFCs.
	Hydrocarbon Blend B	Unacceptable	Flammability is a serious concern. Data have not been submitted to demonstrate it can be used safely in this end-use.
CFC-12, R-502 Cold Storage Warehouses (Retrofit and New Equipment/NIKs).	R-403B	Unacceptable	R-403B contains R-218, a PFC, which has an extremely high GWP and lifetime. Other substitutes exist which do not contain PFCs.
	R-405A	Unacceptable	R-405A contains R-c318, a PFC, which has an extremely high GWP and lifetime. Other substitutes exist which do not contain PFCs.
	Hydrocarbon Blend B	Unacceptable	Flammability is a serious concern. Data have not been submitted to demonstrate it can be used safely in this end-use.
CFC-12, R-500, R-502 Refrigerated Transport (Retrofit and New Equipment/NIKs).	R-403B	Unacceptable	R-403B contains R-218, a PFC, which has an extremely high GWP and lifetime. Other substitutes exist which do not contain PFCs.
	R-405A	Unacceptable	R-405A contains R-c318, a PFC, which has an extremely high GWP and lifetime. Other substitutes exist which do not contain PFCs.
	Hydrocarbon Blend B	Unacceptable	Flammability is a serious concern. Data have not been submitted to demonstrate it can be used safely in this end-use.
CFC-12, R-502 Retail Food Refrigeration (Retrofit and New Equipment/NIKs).	R-403B	Unacceptable	R-403B contains R-218, a PFC, which has an extremely high GWP and lifetime. Other substitutes exist which do not contain PFCs.
	R-405A	Unacceptable	R-405A contains R-c318, a PFC, which has an extremely high GWP and lifetime. Other substitutes exist which do not contain PFCs.
	Hydrocarbon Blend B	Unacceptable	Flammability is a serious concern. Data have not been submitted to demonstrate it can be used safely in this end-use.
CFC-12, R-502 Commercial Ice Machines (Retrofit and New Equipment/NIKs).	R-403B	Unacceptable	R-403B contains R-218, a PFC, which has an extremely high GWP and lifetime. Other substitutes exist which do not contain PFCs.
	R-405A	Unacceptable	R-405A contains R-c318, a PFC, which has an extremely high GWP and lifetime. Other substitutes exist which do not contain PFCs.
	Hydrocarbon Blend B	Unacceptable	Flammability is a serious concern. Data have not been submitted to demonstrate it can be used safely in this end-use.
CFC-12 Vending Machines (Retrofit and New Equipment/NIKs).	R-405A	Unacceptable	R-405A contains R-c318, a PFC, which has an extremely high GWP and lifetime. Other substitutes exist which do not contain PFCs.
	Hydrocarbon Blend B	Unacceptable	Flammability is a serious concern. Data have not been submitted to demonstrate it can be used safely in this end-use.
CFC-12 Water Coolers (Retrofit and New Equipment/NIKs).	R-405A	Unacceptable	R-405A contains R-c318, a PFC, which has an extremely high GWP and lifetime. Other substitutes exist which do not contain PFCs.
	Hydrocarbon Blend B	Unacceptable	Flammability is a serious concern. Data have not been submitted to demonstrate it can be used safely in this end-use.

REFRIGERANTS—UNACCEPTABLE SUBSTITUTES—Continued

End-use	Substitute	Decision	Comments
CFC-12 Household Refrigerators (Retrofit and New Equipment/NIKs).	R-405A	Unacceptable	R-405A contains R-c318, a PFC, which has an extremely high GWP and lifetime. Other substitutes exist which do not contain PFCs.
	Hydrocarbon Blend B	Unacceptable	Flammability is a serious concern. Data have not been submitted to demonstrate it can be used safely in this end-use.
CFC-12, R-502 Household Freezers (Retrofit and New Equipment/NIKs).	R-403B	Unacceptable	R-403B contains R-218, a PFC, which has an extremely high GWP and lifetime. Other substitutes exist which do not contain PFCs.
	R-405A	Unacceptable	R-405A contains R-c318, a PFC, which has an extremely high GWP and lifetime. Other substitutes exist which do not contain PFCs.
	Hydrocarbon Blend B	Unacceptable	Flammability is a serious concern. Data have not been submitted to demonstrate it can be used safely in this end-use.
CFC-12, R-500 Residential Dehumidifiers (Retrofit and New Equipment/NIKs).	R-405A	Unacceptable	R-405A contains R-c318, a PFC, which has an extremely high GWP and lifetime. Other substitutes exist which do not contain PFCs.
	Hydrocarbon Blend B	Unacceptable	Flammability is a serious concern. Data have not been submitted to demonstrate it can be used safely in this end-use.
CFC–12 Motor Vehicle Air Conditioners (Retrofit and New Equipment/NIKs).	R–405A	Unacceptable	R–405A contains R–c318, a PFC, which has an extremely high GWP and lifetime. Other Substitutes exist which do not contain PFCs.
	Hydrocarbon Blend B	Unacceptable	Flammability is a serious concern. Data have not been submitted to demonstrate it can be used safely in this end-use.
	Flammable Substitutes, other than R–152a or HFO–1234yf in new equipment.	Unacceptable	The risks associated with using flammable substitutes (except R–152a and HFO–1234yf) in this end-use have not been addressed by a risk assessment. R–152a and HFO–1234yf may be used in new equipment with the use conditions in appendix B to this subpart.
Motor vehicle air conditioning (new equipment in passenger cars and light-duty trucks only).	HFC–134a	Unacceptable as of Model Year 2021 except where allowed under narrowed use limit.	HFC–134a has a Chemical Abstracts Service Registry Number (CAS Reg. No.) of 811–97–2 and it is also known by the name 1,1,1,2-tetrafluoropropane. HFC–134a has a GWP of 1,430. Other substitutes will be available for this end-use with lower overall risk to human health and the environment by the status change date. This listing does not prohibit the servicing or replacement of motor vehicle air conditioning systems manufactured to use HFC–134a.
Motor vehicle air conditioning (new equipment in passenger cars and light-duty trucks only).	R–406A, R–414A (HCFC Blend Xi, GHG-X4), R–414B (HCFC Blend Omicron), HCFC Blend Delta (Free Zone), Freeze 12, GHG-X5, HCFC Blend Lambda (GHG-HP), R–416A (FRIGC FR-12, HCFC Blend Beta).	Unacceptable as of Model Year 2017.	These refrigerants all contain HCFCs. They have GWPs ranging from 1,080 to 2,340 and ODPs ranging from 0.008 to 0.056. Other substitutes will be available for this end-use with lower overall risk to human health and the environment by the status change date.

REFRIGERANTS—UNACCEPTABLE SUBSTITUTES—Continued

End-use	Substitute	Decision	Comments
Motor vehicle air conditioning (new equipment in passenger cars and light-duty trucks only).	SP34E, R–426A (RS-24, new formulation).	Unacceptable as of Model Year 2017.	These blends have GWPs ranging from approximately 1,410 to 1,510. Other substitutes will be available for this end-use with lower overall risk to human health and the environment by the status change date.

SOLVENT CLEANING SECTOR—ACCEPTABLE SUBJECT TO USE CONDITIONS SUBSTITUTES

Application	Substitute	Decision	Conditions	Comments
Electronics Cleaning w/CFC-113, MCF.	HCFC-225 ca/cb	Acceptable	Subject to the company set exposure limit of 25 ppm of the -ca isomer.	HCFC-225 ca/cb blend is offered as a 45%-ca/55%-cb blend. The company set exposure limit of the -ca isomer is 25 ppm. The company set exposure limit of the -cb isomer is 250 ppm. It is the Agency's opinion that with the low emission cold cleaning and vapor degreasing equipment designed for this use, the 25 ppm limit of the HCFC-225 ca isomer can be met. The company is submitting further exposure monitoring data.
Precision Cleaning w/CFC-113, MCF.	HCFC-225 ca/cb	Acceptable	Subject to the company set exposure limit of 25 ppm of the -ca isomer.	HCFC-225 ca/cb blend is offered as a 45%-ca/55%-cb blend. The company set exposure limit of the -ca isomer is 25 ppm. The company set exposure limit of the -cb isomer is 250 ppm. It is the Agency's opinion that with the low emission cold cleaning and vapor degreasing equipment designed for this use, the 25 ppm limit of the HCFC-225 ca isomer can be met. The company is submitting further exposure monitoring data.

SOLVENT CLEANING SECTOR—UNACCEPTABLE SUBSTITUTES

End use	Substitute	Decision	Comments
Metals cleaning w/CFC-113 ..	Dibromomethane	Unacceptable	High ODP; other alternatives exist.
Metals cleaning w/MCF	Dibromomethane	Unacceptable	High ODP; other alternatives exist.
Electronics cleaning w/CFC-113.	Dibromomethane	Unacceptable	High ODP; other alternatives exist.
Electronics cleaning w/MCF ..	Dibromomethane	Unacceptable	High ODP; other alternatives exist.
Precision cleaning w/CFC-113.	Dibromomethane	Unacceptable	High ODP; other alternatives exist.
Precision cleaning w/MCF	Dibromomethane	Unacceptable	High ODP; other alternatives exist.

FIRE SUPPRESSION AND EXPLOSION PROTECTION—ACCEPTABLE SUBJECT TO USE CONDITIONS: TOTAL FLOODING AGENTS

Application	Substitute	Decision	Conditions	Comments
Halon 1301 Total Flooding Agents.	Inert Gas/Powdered Aerosol Blend.	Acceptable as a Halon 1301 substitute in normally unoccupied areas.	In areas where personnel could possibly be present, as in a cargo area, EPA requires that the employer shall provide a pre-discharge employee alarm capable of being perceived above ambient light or noise levels for alerting employees before system discharge. The pre-discharge alarm shall provide employees time to safely exit the discharge area prior to system discharge.	The manufacturer's SNAP application requested listing for use in unoccupied areas only. See additional comment 2.

Additional Comments

1—Must conform with OSHA 29 CFR 1910 Subpart L Section 1910.160 of the U.S. Code. You should use clean agents in accordance with the safety guidelines in the latest edition of the NFPA 2001 Standard for Clean Agent Fire Extinguishing Systems.

2—Per OSHA requirements, protective gear (SCBA) must be available in the event personnel must enter/reenter the area.

3—Discharge testing should be strictly limited only to that which is essential to meet safety or performance requirements.

4—The agent should be recovered from the fire protection system in conjunction with testing or servicing, and recycled for later use or destroyed.

FIRE SUPPRESSION AND EXPLOSION PROTECTION—ACCEPTABLE SUBJECT TO NARROWED USE LIMITS: TOTAL FLOODING AGENTS

End-use	Substitute	Decision	Conditions	Further information
Total flooding ...	Sulfurhexafluoride (SF_6).	Acceptable subject to narrowed use in limits.	May be used as a discharge test agent in military uses and in civilian aircraft uses only.	This agent has an atmospheric lifetime greater than 1,000 years, with an estimated 100-year, 500-year, and 1,000-year GWP of 16,100, 26,110 and 32,803 respectively. Users should limit testing only to that which is essential to meet safety or performance requirements. This agent is only used to test new Halon 1301 systems. See additional comments 1, 2, 3, 4, 5.
Total flooding ...	CF_3I	Acceptable subject to narrowed use limits.	Use only in normally unoccupied areas.	Use of this agent should be in accordance with the safety guidelines in the latest edition of the NFPA 2001 Standard for Clean Agent Fire Extinguishing Systems. Manufacturer has not applied for listing for use in normally occupied areas. Preliminary cardiosensitization data indicates that this agent would not be suitable for use in normally occupied areas. See additional comments 1, 2, 3, 4, 5.

Additional comments:

1—Must conform with relevant OSHA requirements, including 29 CFR 1910, Subpart L, Sections 1910.160 and 1910.162.

2—Per OSHA requirements, protective gear (SCBA) should be available in the event personnel should reenter the area.

3—Discharge testing should be strictly limited to that which is essential to meet safety or performance requirements.

4—The agent should be recovered from the fire protection system in conjunction with testing or servicing, and recycled for later use or destroyed.

5—EPA has no intention of duplicating or displacing OSHA coverage related to the use of personal protective equipment (e.g., respiratory protection), fire protection, hazard communication, worker training or any other occupational safety and health standard with respect to halon substitutes.

FIRE SUPPRESSION AND EXPLOSION PROTECTION—UNACCEPTABLE SUBSTITUTES

Application	Substitute	Decision	Comments
Halon 1301 Total Flooding Agents.	HFC-32	Unacceptable	Data indicate that HFC-32 is flammable and therefore is not suitable as a halon substitute.

[60 FR 31103, June 13, 1995, as amended at 67 FR 4200, Jan. 29, 2002; 73 FR 33310, June 12, 2008; 76 FR 17519, Mar. 29, 2011; 77 FR 17350, Mar. 26, 2012; 77 FR 33330, June 6, 2012; 80 FR 42952, July 20, 2015; 81 FR 86881, Dec. 1, 2016]

APPENDIX C TO SUBPART G OF PART 82—SUBSTITUTES SUBJECT TO USE RESTRICTIONS AND UNACCEPTABLE SUBSTITUTES LISTED IN THE MAY 22, 1996 FINAL RULE, EFFECTIVE JUNE 21, 1996

REFRIGERATION AND AIR CONDITIONING SECTOR—ACCEPTABLE SUBJECT TO USE CONDITIONS

HCFC Blend Delta and Blend Zeta are acceptable subject to the following conditions when used to retrofit a CFC-12 motor vehicle air conditioning system:

1. Each refrigerant may only be used with a set of fittings that is unique to that refrigerant. These fittings (male or female, as appropriate) must be used with all containers of the refrigerant, on can taps, on recovery, recycling, and charging equipment, and on all air conditioning system service ports. These fittings must be designed to mechanically prevent cross-charging with another refrigerant. A refrigerant may only be used with the fittings and can taps specifically intended for that refrigerant. Using an adapter or deliberately modifying a fitting to use a different refrigerant will be a violation of this use condition. In addition, fittings shall meet the following criteria, derived from Society of Automotive Engineers (SAE) standards and recommended practices:

a. When existing CFC-12 service ports are to be retrofitted, conversion assemblies shall attach to the CFC-12 fitting with a thread lock adhesive and/or a separate mechanical latching mechanism in a manner that permanently prevents the assembly from being removed.

b. All conversion assemblies and new service ports must satisfy the vibration testing requirements of sections 3.2.1 or 3.2.2 of SAE J1660, as applicable, excluding references to SAE J639 and SAE J2064, which are specific to HFC-134a.

c. In order to prevent discharge of refrigerant to the atmosphere, systems shall have a device to limit compressor operation before the pressure relief device will vent refrigerant. This requirement is waived for systems that do not feature such a pressure relief device.

d. All CFC-12 service ports not retrofitted with conversion assemblies shall be rendered permanently incompatible for use with CFC-12 related service equipment by fitting with a device attached with a thread lock adhesive and/or a separate mechanical latching mechanism in a manner that prevents the device from being removed.

2. When a retrofit is performed, a label must be used as follows:

a. The person conducting the retrofit must apply a label to the air conditioning system in the engine compartment that contains the following information:

i. The name and address of the technician and the company performing the retrofit.

ii. The date of the retrofit.

iii. The trade name, charge amount, and, when applicable, the ASHRAE refrigerant numerical designation of the refrigerant.

iv. The type, manufacturer, and amount of lubricant used.

v. If the refrigerant is or contains an ozone-depleting substance, the phrase ''ozone depleter.''

vi. If the refrigerant displays flammability limits as measured according to ASTM E681, the statement ''This refrigerant is FLAMMABLE. Take appropriate precautions.''

b. This label must be large enough to be easily read and must be permanent.

c. The background color must be unique to the refrigerant.

d. The label must be affixed to the system over information related to the previous refrigerant, in a location not normally replaced during vehicle repair.

e. Information on the previous refrigerant that cannot be covered by the new label must be permanently rendered unreadable.

3. No substitute refrigerant may be used to ''top-off'' a system that uses another refrigerant. The original refrigerant must be recovered in accordance with regulations issued under section 609 of the CAA prior to charging with a substitute.

SOLVENT CLEANING SECTOR—PROPOSED ACCEPTABLE SUBJECT TO USE CONDITIONS SUBSTITUTES

Application	Substitute	Decision	Conditions	Comments
Metals Cleaning with CFC-113, MCF and HCFC-141b.	Monochlorotoluenes and benzotrifluorides.	Acceptable	Subject to a 50 ppm workplace standard for monochlorotoluenes and a 25 ppm standard for benzotrifluorides.	The workplace standard for monochlorotoluenes is based on an OSHA PEL of 50 ppm for orthochlorotoluene. The workplace standard for benzotrifluorides is based on a recent toxicology study.

SOLVENT CLEANING SECTOR—PROPOSED ACCEPTABLE SUBJECT TO USE CONDITIONS SUBSTITUTES—Continued

Application	Substitute	Decision	Conditions	Comments
Electronics Cleaning w/ CFC-113, MCF and HCFC-141b.	Monochlorotoluenes and benzotrifluorides.	Acceptable	Subject to a 50 ppm workplace standard for monochlorotoluenes and a 25 ppm standard for benzotrifluorides.	The workplace standard for monochlorotoluenes is based on an OSHA PEL of 50 ppm for orthochlorotoluene. The workplace standard for benzotrifluorides is based on a recent toxicology study.
Precision Cleaning w/ CFC-113, MCF and HCFC-141b.	Monochlorotoluenes and benzotrifluorides.	Acceptable	Subject to a 50 ppm workplace standard for monochlorotoluenes and a 25 ppm standard for benzotrifluorides.	The workplace standard for monochlorotoluenes is based on an OSHA PEL of 50 ppm for orthochlorotoluene. The workplace standard for benzotrifluorides is based on a recent toxicology study.

ACCEPTABLE SUBJECT TO NARROWED USE LIMITS: STREAMING AGENTS

Application	Substitute	Decision	Comments
Halon 1211 ..... Streaming Agents	CF_3I	Acceptable in non-residential uses only.	

AEROSOLS—PROPOSED ACCEPTABLE SUBJECT TO USE CONDITIONS SUBSTITUTES

Application	Substitute	Decision	Conditions	Comments
CFC-113, MCF and HCFC-141b as solvent.	Monochlorotoluenes and benzotrifluo-rides.	Acceptable	Subject to a 50 ppm workplace standard for monochlorotoluenes and a 25 ppm standard for benzotrifluorides.	The workplace standard for monochlorotoluenes is based on an OSHA PEL of 50 ppm for orthochlorotoluene. The workplace standard for benzotrifluorides is based on a recent toxicology study.

ADHESIVES, COATINGS AND INKS—PROPOSED ACCEPTABLE SUBJECT TO USE CONDITIONS SUBSTITUTES

Application	Substitute	Decision	Conditions	Comments
CFC-113, MCF and HCFC-141b.	Monochlorotoluenes and benzotrifluo-rides.	Acceptable	Subject to a 50 ppm workplace standard for monochlorotoluenes and a 25 ppm standard for benzotrifluorides.	The workplace standard for monochlorotoluenes is based on an OSHA PEL of 50 ppm for orthochlorotoluene. The workplace standard for benzotrifluorides is based on a recent toxicology study.

[61 FR 25592, May 22, 1996, as amended at 67 FR 4201, Jan. 29, 2002]

EFFECTIVE DATE NOTE: At 61 FR 25592, May 22, 1996, appendix C to subpart G of part 82 was added. This appendix contains information collection and recordkeeping requirements that will not become effective until approval has been given by the Office of Management and Budget.

APPENDIX D TO SUBPART G OF PART 82—SUBSTITUTES SUBJECT TO USE RESTRICTIONS AND UNACCEPTABLE SUBSTITUTES

Summary of Decisions

Refrigeration and Air Conditioning Sector
Acceptable Subject to Use Conditions

R-406A/''GHG''/''McCool'', ''GHG-HP'', ''GHG-X4''/''Autofrost''/''Chill-It'', and ''Hot Shot''/''Kar Kool'' are acceptable substitutes for CFC-12 in retrofitted motor vehicle air conditioning systems (MVACs) subject to the use condition that a retrofit to these refrigerants must include replacing non-barrier hoses with barrier hoses.

For all refrigerants submitted for use in motor vehicle air conditioning systems, subsequent to the effective date of this FRM, in addition to the information previously required in the March 18, 1994 final SNAP rule (58 FR 13044), SNAP submissions must include specifications for the fittings similar to those found in SAE J639, samples of all fittings, and the detailed label described below at the same time as the initial SNAP submission, or the submission will be considered incomplete. Under section 612 of the Clean Air Act, substitutes for which submissions are incomplete may not be sold or used, regardless of other acceptability determinations, and the prohibition against sale of a new refrigerant will not end until 90 days after EPA determines the submission is complete.

In addition, the use of a) R–406A/''GHG''/''McCool'', ''HCFC Blend Lambda''/''GHG-HP'', R–414A/''HCFC Blend Xi''/''GHG-X4/''Autofrost''/''Chill-It'', R–414B/''Hot Shot''/''Kar Kool'', and R–416A/''HCFC Blend Beta''/''FREEZE 12'' as CFC–12 substitutes in retrofitted MVACs, and b) all refrigerants submitted for, and listed in, subsequent Notices of Acceptability as substitutes for CFC–12 in MVACs, must meet the following conditions.

1. Each refrigerant may only be used with a set of fittings that is unique to that refrigerant. These fittings (male or female, as appropriate) must be designed by the manufacturer of the refrigerant. The manufacturer is responsible to ensure that the fittings meet all of the requirements listed below, including testing according to SAE standards. These fittings must be designed to mechanically prevent cross-charging with another refrigerant, including CFC-12.

The fittings must be used on all containers of the refrigerant, on can taps, on recovery, recycling, and charging equipment, and on all air conditioning system service ports. A refrigerant may only be used with the fittings and can taps specifically intended for that refrigerant and designed by the manufacturer of the refrigerant. Using a refrigerant with a fitting designed by anyone else, even if it is different from fittings used with other refrigerants, is a violation of this use condition. Using an adapter or deliberately modifying a fitting to use a different refrigerant is a violation of this use condition.

Fittings shall meet the following criteria, derived from Society of Automotive Engineers (SAE) standards and recommended practices:

a. When existing CFC-12 service ports are retrofitted, conversion assemblies shall attach to the CFC-12 fitting with a thread lock adhesive and/or a separate mechanical latching mechanism in a manner that permanently prevents the assembly from being removed.

b. All conversion assemblies and new service ports must satisfy the vibration testing requirements of section 3.2.1 or 3.2.2 of SAE J1660, as applicable, excluding references to SAE J639 and SAE J2064, which are specific to HFC-134a.

c. In order to prevent discharge of refrigerant to the atmosphere, systems shall have a device to limit compressor operation before the pressure relief device will vent refrigerant.

d. All CFC-12 service ports not retrofitted with conversion assemblies shall be rendered permanently incompatible for use with CFC-12 related service equipment by fitting with a device attached with a thread lock adhesive and/or a separate mechanical latching mechanism in a manner that prevents the device from being removed.

2. When a retrofit is performed, a label must be used as follows:

a. The person conducting the retrofit must apply a label to the air conditioning system in the engine compartment that contains the following information:

i. The name and address of the technician and the company performing the retrofit.

ii. The date of the retrofit.

iii. The trade name, charge amount, and, when applicable, the ASHRAE refrigerant numerical designation of the refrigerant.

iv. The type, manufacturer, and amount of lubricant used.

v. If the refrigerant is or contains an ozone-depleting substance, the phrase ''ozone depleter''.

vi. If the refrigerant displays flammability limits as measured according to ASTM E681, the statement ''This refrigerant is FLAMMABLE. Take appropriate precautions.''

b. The label must be large enough to be easily read and must be permanent.

c. The background color must be unique to the refrigerant.

d. The label must be affixed to the system over information related to the previous refrigerant, in a location not normally replaced during vehicle repair.

e. In accordance with SAE J639, testing of labels must meet ANSI/UL 969–1991.

f. Information on the previous refrigerant that cannot be covered by the new label must be rendered permanently unreadable.

3. No substitute refrigerant may be used to ''top-off'' a system that uses another refrigerant. The original refrigerant must be recovered in accordance with regulations issued under section 609 of the CAA prior to charging with a substitute.

SOLVENT CLEANING SECTOR

[Acceptable Subject to Use Conditions Substitutes]

Application	Substitute	Decision	Conditions	Comments
Electronics Cleaning w/CFC-113 and MCF.	HFC-4310mee	Acceptable	Subject to a 200 ppm time-weighted average workplace exposure standard and a 400 ppm workplace exposure ceiling.	
Precision Cleaning w/CFC-113 and MCF.	HFC-4310mee	Acceptable	Subject to a 200 ppm time-weighted average workplace exposure standard and a 400 ppm workplace exposure ceiling.	

SOLVENT SECTOR

[Acceptable Subject to Narrowed Use Limits]

Application	Substitute	Decision	Comments
Electronics Cleaning w/CFC-113 and MCF.	Perfluoropolyethers.	Perfluoropolyethers are acceptable substitutes for CFC-113 and MCF in the precision cleaning sector for high performance, precision-engineered applications only where reasonable efforts have been made to ascertain that other alternatives are not technically feasible due to performance or safety requirements.	PFPEs have similar global warming profile to the PFCs, and the SNAP decision on PFPEs parallels that for PFCs.
Precision Cleaning w/CFC-113 and MCF.	Perfluoropolyethers.	Perfluoropolyethers are acceptable substitutes for CFC-113 and MCF in the precision cleaning sector for high performance, precision-engineered applications only where reasonable efforts have been made to ascertain that other alternatives are not technically feasible due to performance or safety requirements.	PFPEs have similar global warming profile to the PFCs, and the SNAP decision on PFPEs parallels that for PFCs.

Unacceptable Substitutes

End-use	Substitute	Decision	Comments
Electronics Cleaning w/CFC-113 and MCF.	HCFC-141b ...	Extension of existing unacceptability determination to grant existing uses in high-performance electronics permission to continue until January 1, 1997.	This determination extends the use date for HCFC-141b in solvent cleaning, but only for existing users in high-performance electronics and only for one year.
Precision Cleaning w/CFC-113 and MCF.	HCFC-141b ...	Extension of existing unacceptability determination to grant existing uses in precision cleaning permission to continue until January 1, 1997.	This determination extends the use date for HCFC-141b in solvent cleaning, but only for existing users in precision cleaning and only for one year.

AEROSOLS SECTOR

Acceptable Subject to Narrowed Use Limits

Application	Substitute	Decision	Comments
CFC-113, MCF, and HCFC-141b as aerosol solvents.	Perfluorocarbons	Perfluorocarbons are acceptable substitutes for aerosol applications only where reasonable efforts have been made to ascertain that other alternatives are not technically feasible due to performance or safety requirements.	PFCs have extremely long atmospheric lifetimes and high Global Warming Potentials. This decision reflects these concerns and is patterned after the SNAP decision on PFCs in the solvent cleaning sector.

AEROSOLS SECTOR—Continued

Acceptable Subject to Narrowed Use Limits

Application	Substitute	Decision	Comments
	Perfluoropolyethers.	Perfluorocarbons are acceptable substitutes for aerosol applications only where reasonable efforts have been made to ascertain that other alternatives are not technically feasible due to performance or safety requirements.	PFPEs have similar global warming profile to the PFCs, and the SNAP decision on PFPEs parallels that for PFCs in the solvent cleaning sector.

Unacceptable Substitutes

End-use	Substitute	Decision	Comments
CFC-11, CFC-12, HCFC-22, and HCFC-142b as aerosol propellants.	SF6	Unacceptable	SF6 has the highest GWP of all industrial gases, and other compressed gases meet user needs in this application equally well.

[61 FR 54040, Oct. 16, 1996, as amended at 80 FR 42953, July 20, 2015]

APPENDIX E TO SUBPART G OF PART 82—UNACCEPTABLE SUBSTITUTES LISTED IN THE JANUARY 26, 1999 FINAL RULE, EFFECTIVE JANUARY 26, 1999

REFRIGERATION AND AIR-CONDITIONING SECTOR UNACCEPTABLE SUBSTITUTES

End-use	Substitute	Decision	Comments
All refrigeration and air-conditioning end uses	MT–31	Unacceptable	Chemical contained in this blend presents unacceptable toxicity risk.

[64 FR 3865, Jan. 26, 1999]

APPENDIX F TO SUBPART G OF PART 82—UNACCEPTABLE SUBSTITUTES LISTED IN THE JANUARY 26, 1999 FINAL RULE, EFFECTIVE JANUARY 26, 1999

REFRIGERATION AND AIR-CONDITIONING SECTOR UNACCEPTABLE SUBSTITUTES

End-use	Substitute	Decision	Comments
All refrigeration and air-conditioning end uses.	Hexafluoropropylene (HFP) and all HFP-containing blends.	Unacceptable	Presents unacceptable toxicity risk.

[64 FR 3868, Jan. 26, 1999]

APPENDIX G TO SUBPART G OF PART 82—SUBSTITUTES SUBJECT TO USE RESTRICTIONS AND UNACCEPTABLE SUBSTITUTES LISTED IN THE MARCH 3, 1999, FINAL RULE, EFFECTIVE APRIL 2, 1999.

REFRIGERANTS UNACCEPTABLE SUBSTITUTES

End-use	Substitute	Decision	Comments
CFC-12, R-502, and HCFC-22 Household Refrigeration, Transport Refrigeration, Vending Machines, Cold Storage Warehouses, and Retail Food Refrigeration, Retrofit and New.	Self-Chilling Cans-Using HFC-134a or HFC-152a.	Unacceptable	Unacceptably high greenhouse gas emissions from direct release of refrigerant to the atmosphere.

[64 FR 10378, Mar. 3, 1999]

APPENDIX H TO SUBPART G OF PART 82—SUBSTITUTES SUBJECT TO USE RESTRICTIONS AND UNACCEPTABLE SUBSTITUTES, EFFECTIVE MAY 28, 1999

CFC-12 Automobile and Non-automobile Motor Vehicle Air Conditioners, Retrofit and New

Criteria for Uniqueness of Fittings

(a) All fittings for alternative motor vehicle refrigerants must meet the following requirements:

(1) High-side screw-on fittings for each refrigerant must differ from high-side screw-on fittings for all other refrigerants, including CFC-12, and from low-side screw-on fittings for CFC-12;

(2) Low-side screw-on fittings for each refrigerant must differ from low-side screw-on fittings for all other refrigerants, including CFC-12;

(3) High-side screw-on fittings for a given refrigerant must differ from low-side screw-on fittings for that refrigerant, to protect against connecting a low-pressure system to a high-pressure one;

(4) High-side quick-connect fittings for each refrigerant must differ from high-side quick-connect fittings for all other refrigerants, including CFC-12 (if they exist);

(5) Low-side quick-connect fittings for each refrigerant must differ from low-side quick-connect fittings for all other refrigerants, including CFC-12 (if they exist);

(6) High-side quick-connect fittings for a given refrigerant must differ from low-side quick-connect fittings for that refrigerant, to protect against connecting a low-pressure system to a high-pressure one;

(7) For each type of container, the fitting for each refrigerant must differ from the fitting for that type of container for all other refrigerants, including CFC-12.

(b) For screw-on fittings, ''differ'' means that either the diameter must differ by at least 1/16 inch or the thread direction must be reversed (i.e. right-handed vs. left-handed). Simply changing the thread pitch is not sufficient. For quick-connect fittings, ''differ'' means that a person using normal force and normal tools (including wrenches) must not be able to cross-connect fittings.

(c) The sole exception to the 1/16 inch difference requirement is the difference between the small can fittings for GHG-X4 and R-406A. The GHG-X4 small can fitting uses a metric measurement, and is slightly less than 1/16 inch larger than the small can fitting for R-406A. EPA has concluded that these fittings will not cross-connect, and therefore they may be used.

REFRIGERATION AND AIR CONDITIONING—UNACCEPTABLE SUBSTITUTES

End-use	Substitute	Decision	Comments
All HCFC-22 end-uses, retrofit and new.	NARM–22	Unacceptable	This blend contains HCFC-22, and it is inappropriate to use such a blend as a substitute for HCFC-22. In addition, this blend contains HFC-23, which has an extremely high GWP and lifetime. Other substitutes for HCFC-22 exist that do not contain either HCFC-22 or HFC-23.

SOLVENTS CLEANING—UNACCEPTABLE SUBSTITUTES

End-use	Substitute	Decision	Comments
Metals, Electronic, and Precision cleaning with CFC-113, methyl chloroform, and HCFC-141b.	Chlorobromomethane.	Unacceptable	Other alternatives exist with zero or much lower ODP.

FIRE SUPPRESSION AND EXPLOSION PROTECTION—ACCEPTABLE SUBJECT TO NARROWED USE LIMITS: TOTAL FLOODING AGENTS

End-use	Substitute	Decision	Conditions	Further information
Total flooding	HFC-236fa	Acceptable subject to narrowed use limits.	Acceptable when manufactured using any process that does not convert perfluoroisobutylene (PFIB) directly to HFC-236fa in a single step: for use in explosion suppression and explosion inertion applications, and for use in fire suppression applications where other non-PFC agents or alternatives are not technically feasible due to performance or safety requirements: (a) because of their physical or chemical properties, or (b) where human exposure to the extinguishing agents may result in failure to meet safety guidelines in the latest edition of the NFPA 2001 Standard for Clean Agent Fire Extinguishing Systems.	Use of this agent should be in accordance with the safety guidelines in the latest edition of the NFPA 2001 Standard for Clean Agent Fire Systems. Users should observe the limitations on HFC-236fa acceptability by taking the following measures: (i) conduct an evaluation of foreseeable conditions of end-use; (ii) determine that the physical or chemical properties, or other technical constraints of the other available agents preclude their use; and (iii) determine that human exposure to the other alternative extinguishing agents may result in failure to meet safety guidelines in the latest edition of the NFPA 2001 Standard for Clean Agent Fire Extinguishing Systems. Documentation of such measures should be available for review upon request. The principal environmental characteristic of concern for HFC-236fa is its high GWP of 9400 and long atmospheric lifetime of 226 years. Actual contributions to global warming depend upon the quantities emitted. See additional comments 1, 2, 3, 4, 5.
Total flooding	C_3F_8	Acceptable subject to narrowed use limits.	Acceptable for nonresidential uses where other alternatives are not technically feasible due to performance or safety requirements: (a) because of their physical or chemical properties, or (b) where human exposure to the extinguishing agents may result in failure to meet safety guidelines in the latest edition of the NFPA 2001 Standard for Clean Agent Fire Extinguishing Systems.	Use of this agent should be in accordance with the safety guidelines in the latest edition of the NFPA 2001 Standard for Clean Agent Fire Extinguishing Systems. Users should observe the limitations on PFC acceptability by taking the following measures: (i) conduct an evaluation of foreseeable conditions of end-use; (ii) determine that the physical or chemical properties or other technical constraints of the other available agents preclude their use; and (iii) determine that human exposure to the other alternative extinguishing agents may result in failure to meet safety guidelines in the latest edition of the NFPA 2001 Standard for Clean Agent Fire Extinguishing Systems. Documentation of such measures should be available for review upon request. The principal environmental characteristic of concern for PFCs is that they have high GWPs and long atmospheric lifetimes. Actual contributions to global warming depend upon the quantities of PFCs emitted. See additional comments 1, 2, 3, 4, 5.

FIRE SUPPRESSION AND EXPLOSION PROTECTION—ACCEPTABLE SUBJECT TO NARROWED USE LIMITS: TOTAL FLOODING AGENTS—Continued

End-use	Substitute	Decision	Conditions	Further information
Total flooding	C_4F_{10}	Acceptable subject to narrowed use limits	Acceptable for nonresidential uses where other alternatives are not technically feasible due to performance or safety requirements: (a) because of their physical or chemical properties, or (b) where human exposure to the extinguishing agents may result in failure to meet safety guidelinesin the latest edition of the NFPA 2001 Standard for Clean Agent Fire Extinguishing Systems	Use of this agent should be in accordance with the safety guidelines in the latest edition of the NFPA 2001 Standard for Clean Agent Fire Extinguishing Systems. Users should observe the limitations on PFC acceptability by taking the following measures: (i) conduct an evaluation of foreseeable conditions of end-use; (ii) determine that the physical or chemical properties or other technical constraints of the other available agents preclude their use; and (iii) determine that human exposure to the other alternative extinguishing agents may result in failure to meet safety guidelines in the latest edition of the NFPA 2001 Standard for Clean Agent Fire Extinguishing Systems Documentation of such measures should be available for review upon request. The principal environmental characteristic of concern for PFCs is that they have high GWPs and long atmospheric lifetimes. Actual contributions to global warming depend upon the quantities of PFCs emitted. See additional comments 1, 2, 3, 4, 5.

Additional comments:

1—Should conform with relevant OSHA requirements, including 29 CFR 1910, Subpart L, Sections 1910.160 and 1910.162.

2—Per OSHA requirements, protective gear (SCBA) should be available in the event personnel should reenter the area.

3—Discharge testing should be strictly limited to that which is essential to meet safety or performance requirements.

4—The agent should be recovered from the fire protection system in conjunction with testing or servicing, and recycled for later use or destroyed.

5—EPA has no intention of duplicating or displacing OSHA coverage related to the use of personal protective equipment (e.g., respiratory protection), fire protection, hazard communication, worker training or any other occupational safety and health standard with respect to halon substitutes.

FIRE SUPPRESSION AND EXPLOSION PROTECTION—STREAMING AGENTS—ACCEPTABLE SUBJECT TO NARROWED USE LIMITS

End-use	Substitute	Decision	Conditions	Comments
Halon 1211 ..... replacement	C6F14	Acceptable for nonresidential uses where other alternatives are not technically feasible due to performance or safety requirements: (a) because of their physical or chemical properties, or (b) where human exposure to the extinguishing agents may result in failure to meet applicable use conditions.		Users should observe the limitations on PFC acceptability by taking the following measures: (i) conduct an evaluation of foreseeable conditions of end-use; (ii) determine that the physical or chemical properties or other technical constraints of the other available agents preclude their use; and (iii) determine that human exposure to the other alternative extinguishing agents may result in failure to meet applicable use conditions Documentation of such measures should be available for review upon request. The principal environmental characteristic of concern for PFCs is that they have high GWPs and long atmospheric lifetimes. Actual contributions to global warming depend upon the quantities of PFCs emitted. For additional guidance regarding applications in which PFCs may be appropriate, users should consult the description of potential uses which is included in the March 18, 1994 Final Rule (59 FR 13044.) See comments 1, 2.
Halon 1211 replacement.	HFC-236fa	Acceptable in nonresidential uses when manufactured using any process that does not convert perfluoroisobutylene (PFIB) directly to HFC-236fa in a single step		See comments 1, 2, 3.
Halon 1211 replacement. Additional comments:	HFC-227ea	Acceptable in nonresidential uses only		See comments 1, 2.

1—Discharge testing and training should be strictly limited only to that which is essential to meet safety or performance requirements.
2—The agent should be recovered from the fire protection system in conjunction with testing or servicing, and recycled for later use or destroyed.
3—Acceptable for local application systems inside textile process machinery.

FIRE SUPPRESSION AND EXPLOSION PROTECTION—TOTAL FLOODING AGENTS—UNACCEPTABLE SUBSTITUTES

End-use	Substitute	Decision	Comments
Halon 1301 replacement	Chlorobromomethane.	Unacceptable	Other alternatives exist with zero or lower ODP; OSHA regulations prohibit its use as extinguishing agent in fixed extinguishing systems where employees may be exposed. See 29 CFR 1910.160(b)(11).

AEROSOLS—UNACCEPTABLE SUBSTITUTES

End-use	Substitute	Decision	Comments
Solvent in aerosols with CFC-113, MCF, or HCFC-141b.	Chlorobromomethane.	Unacceptable	Other alternatives exist with zero or much lower ODP.

ADHESIVES, COATINGS, AND INKS—UNACCEPTABLE SUBSTITUTES

End-use	Substitute	Decision	Comments
Solvent in adhesives, coatings, and inks with CFC-113.	Chlorobromomethane.	Unacceptable	Other alternatives exist with zero or much lower ODP.
Solvent in adhesives, coatings, and inks with MCF.	Chlorobromomethane.	Unacceptable	Other alternatives exist with zero or much lower ODP.
Solvent in adhesives, coatings and inks with HCFC-141b.	Chlorobromomethane.	Unacceptable	Other alternatives exist with zero or much lower ODP.

[64 FR 22996, Apr. 28, 1999, as amended at 67 FR 4201, Jan. 29, 2002]

APPENDIX I TO SUBPART G OF PART 82—SUBSTITUTES SUBJECT TO USE RESTRICTIONS, LISTED IN THE APRIL 26, 2000, FINAL RULE, EFFECTIVE MAY 26, 2000

FIRE SUPPRESSION AND EXPLOSION PROTECTION—STREAMING AGENTS

[Substitutes Acceptable Subject to Narrowed Use Limits]

End Use	Substitute	Decision	Limitations	Comments
Halon 1211 Streaming Agents.	HCFC Blend E.	Acceptable ..	Nonresidential uses only	As with other streaming agents, EPA recommends that potential risks of combustion byproducts be labeled on the extinguisher (see UL 2129). See additional comments 1, 2.

Additional Comments:

1. Discharge testing and training should be strictly limited only to that which is essential to meet safety or performance requirements.
2. The agent should be recovered from the fire protection system in conjunction with testing or servicing, and recycled for later use or destroyed.

[65 FR 24392, Apr. 26, 2000, as amended at 67 FR 4202, Jan. 29, 2002]

APPENDIX J TO SUBPART G OF PART 82—SUBSTITUTES LISTED IN THE JANUARY 29, 2002 FINAL RULE, EFFECTIVE APRIL 1, 2002

FIRE SUPPRESSION AND EXPLOSION PROTECTION SECTION—TOTAL FLOODING SUBSTITUTES—ACCEPTABLE SUBJECT TO NARROWED USE LIMITS

End-use	Substitute	Decision	Conditions	Further information
Total flooding.	HFC Blend B (Halotron II®).	Acceptable subject to narrowed use limits.	Acceptable in areas that are not normally occupied only.	See additional comments 1, 2, 3, 4, 5.

Additional comments:

1—Should conform to relevant OSHA requirements, including 29 CFR 1910, subpart L, Sections 1910.160 and 1910.162.
2—Per OSHA requirements, protective gear (SCBA) should be available in the event personnel should reenter the area.
3—Discharge testing should be strictly limited to that which is essential to meet safety or performance requirements.
4—The agent should be recovered from the fire protection system in conjunction with testing or servicing, and recycled for later use or destroyed.
5—EPA has no intention of duplicating or displacing OSHA coverage related to the use of personal protective equipment (e.g., respiratory protection), fire protection, hazard communication, worker training or any other occupational safety and health standard with respect to halon substitutes.

FIRE SUPPRESSION AND EXPLOSION PROTECTION SECTOR—TOTAL FLOODING SUBSTITUTES—UNACCEPTABLE SUBSTITUTES

End-Use	Substitute	Decision	Further Information
Halon 1301	HBFC–22B1 ..	Unacceptable	HBFC–22B1 is a Class I ozone depleting substance with an ozone depletion potential of 0.74.
Total Flooding Agents.	.....	.....	The manufacturer of this agent terminated production of this agent January 1, 1996, except for critical uses, and removed it from the market because it is a fetal toxin.

[67 FR 4202, Jan. 29, 2002, as amended at 71 FR 56367, Sept. 27, 2006]

APPENDIX K TO SUBPART G OF PART 82—SUBSTITUTES SUBJECT TO USE RESTRICTIONS AND UNACCEPTABLE SUBSTITUTES LISTED IN THE JULY 22, 2002, FINAL RULE EFFECTIVE AUGUST 21, 2002

FOAM BLOWING—UNACCEPTABLE SUBSTITUTES

End-use	Substitute	Decision	Comments
Replacements for HCFC-141b in the following rigid polyurethane/polyisocyanurate applications:. —Boardstock —Appliance —Spray	HCFC-22, HCFC-142b and blends thereof.	Unacceptable Closed cell foam products and products containing closed cell foams manufactured with these substitutes on or before December 1, 2017 may be used after that date.	Alternatives exist with lower or zero-ODP.
All foam end-uses	HCFC-124	Unacceptable Closed cell foam products and products containing closed cell foams manufactured with this substitute on or before December 1, 2017 may be used after that date.	Alternatives exist with lower or zero-ODP.

[81 FR 86883, Dec. 1, 2016]

APPENDIX L TO SUBPART G OF PART 82—SUBSTITUTES LISTED IN THE JANUARY 27, 2003, FINAL RULE, EFFECTIVE MARCH 28, 2003

FIRE SUPPRESSION AND EXPLOSION PROTECTION SECTOR—TOTAL FLOODING SUBSTITUTES—ACCEPTABLE SUBJECT TO USE CONDITIONS

End-use	Substitute	Decision	Conditions	Comments
Total flooding	HFC227–BC	Acceptable subject to use conditions.	Sodium bicarbonate release in all settings should be targeted so that increased pH level would not adversely affect exposed individuals. Users should provide special training to individuals required to be in environments protected by HFC227–BC extinguishing systems. Each HFC227–BC extinguisher should be clearly labelled with the potential hazards from use and safe handling procedures.	Use of the agent, HFC-227ea, should be in accordance with the safety guidelines in the latest edition of the NFPA 2001 Standard for Clean Agent Fire Extinguishing Systems. *See* additional comments 1, 2, 3, 4, 5.

Additional comments.

1—Should conform with relevant OSHA requirements, including 29 CFR part 1910, subpart L, sections 1910.160 and 1910.162.

2—Per OSHA requirements, protective gear (SCBA) should be available in the event personnel should reenter the area.

3—Discharge testing should be strictly limited to that which is essential to meet safety or performance requirements.

4—The agent should be recovered from the fire protection system in conjunction with testing or servicing, and recycled for later use or destroyed.

5—EPA has no intention of duplicating or displacing OSHA coverage related to the use of personal protective equipment (*e.g.,* respiratory protection), fire protection, hazard communication, worker training or any other occupational safety and health standard with respect to halon substitutes.

FIRE SUPPRESSION AND EXPLOSION PROTECTION SECTOR—STREAMING AGENTS—ACCEPTABLE SUBJECT TO NARROWED USE LIMITS

End-use	Substitute	Decision	Conditions	Comments
Streaming	C6-perfluoroketone (FK-5-1-12MYY2).	Acceptable subject to narrowed use limits.	For use only in non-residential areas.	For operations that fill canisters to be used in streaming applications, EPA recommends the following: —Adequate ventilation should be in place; —All spills should be cleaned up immediately in accordance with good industrial hygiene practices; and —Training for safe handling procedures should be provided to all employees that would be likely to handle containers of the agent or extinguishing units filled with the agent. *See* additional comments 1, 2, 3, 4.
Streaming	H Galden HFPEs	Acceptable subject to narrowed use limits.	For use only in non-residential areas.	For operations that fill canisters to be used in streaming applications, EPA recommends the following: —Adequate ventialtion should be in place; —All spills should be cleaned up immediately in accordance with good industrial hygiene practices; and —Training for safe handling procedures should be provided to all employees that would be likely to handle containers of the agent or extinguishing units filled with the agent. *See* additional comments 1, 2, 3, 4.

Additional comments.

1—Discharge testing should be strictly limited to that which is essential to meet safety or performance requirements.

2—The agent should be recovered from the fire protection system in conjunction with testing or servicing, and recycled for later use or destroyed.

3—EPA has no intention of duplicating or displacing OSHA coverage related to the use of personal protective equipment (*e.g.,* respiratory protection), fire protection, hazard communication, worker training or any other occupational safety and health standard with respect to halon substitutes.

4—As with other streaming agents, EPA recommends that potential risks of combustion by-products be labelled on the extinguisher (*see* UL 2129)

[68 FR 4010, Jan. 27, 2003]

APPENDIX M TO SUBPART G OF PART 82—UNACCEPTABLE SUBSTITUTES LISTED IN THE SEPTEMBER 30, 2004 FINAL RULE, EFFECTIVE NOVEMBER 29, 2004

FOAM BLOWING—UNACCEPTABLE SUBSTITUTES

End-use	Substitute	Decision	Comments
All foam end-uses: —rigid polyurethane and polyisocyanurate laminated boardstock —rigid polyurethane appliance —rigid polyurethane spray and commercial refrigeration, and sandwich panels —rigid polyurethane slabstock and other foams —polystyrene extruded insulation boardstock and billet —phenolic insulation board and bunstock —flexible polyurethane —polystyrene extruded sheet —Except for: [1] —space vehicle —nuclear —defense —research and development for foreign customers	HCFC-141b	Unacceptable Closed cell foam products and products containing closed cell foams manufactured with this substitute on or before December 1, 2017 may be used after that date.	Alternatives exist with lower or zero-ODP.

[1] Exemptions for specific applications are identified in the list of acceptable substitutes, which is available on the SNAP Web site at: *https://www.epa.gov/snap/foam-blowing-agents.*

[81 FR 86883, Dec. 1, 2016]

APPENDIX N TO SUBPART G OF PART 82 [RESERVED]

APPENDIX O TO SUBPART G OF PART 82—SUBSTITUTES LISTED IN THE SEPTEMBER 27, 2006 FINAL RULE, EFFECTIVE NOVEMBER 27, 2006

FIRE SUPPRESSION AND EXPLOSION PROTECTION SECTOR—TOTAL FLOODING SUBSTITUTES—ACCEPTABLE SUBJECT TO USE CONDITIONS

End-use	Substitute	Decision	Conditions	Further information
Total flooding	Gelled Halocarbon/Dry Chemical Suspension (Envirogel) with sodium bicarbonate additive.	Acceptable subject to use conditions.	Use of whichever hydrofluorocarbon gas (HFC-125, HFC-227ea, or HFC-236fa) is employed in the formulation must be in accordance with all requirements for acceptability (*i.e.,* narrowed use limits) of that HFC under EPA's SNAP program.	Use of this agent should be in accordance with the safety guidelines in the latest edition of the NFPA 2001 Standard for Clean Agent Fire Extinguishing Systems, for whichever hydrofluorocarbon gas is employed, and the latest edition of the NFPA 2010 standard for Aerosol Extinguishing Systems. Sodium bicarbonate release in all settings should be targeted so that increased blood pH level would not adversely affect exposed individuals.

FIRE SUPPRESSION AND EXPLOSION PROTECTION SECTOR—TOTAL FLOODING SUBSTITUTES—ACCEPTABLE SUBJECT TO USE CONDITIONS—Continued

End-use	Substitute	Decision	Conditions	Further information
				Users should provide special training, including the potential hazards associated with the use of the HFC agent and sodium bicarbonate, to individuals required to be in environments protected by Envirogel with sodium bicarbonate additive extinguishing systems. Each extinguisher should be clearly labeled with the potential hazards from use and safe handling procedures. See additional comments 1, 2, 3, 4, 5.
Total flooding	Powdered Aerosol E (FirePro®).	Acceptable subject to use conditions.	For use only in normally unoccupied areas.	Use of this agent should be in accordance with the safety guidelines in the latest edition of the NFPA 2010 standard for Aerosol Extinguishing Systems. For establishments manufacturing the agent or filling, installing, or servicing containers or systems to be used in total flooding applications, EPA recommends the following: —adequate ventilation should be in place to reduce airborne exposure to constituents of agent; —an eye wash fountain and quick drench facility should be close to the production area; —training for safe handling procedures should be provided to all employees that would be likely to handle containers of the agent or extinguishing units filled with the agent; —workers responsible for clean up should allow for maximum settling of all particulates before reentering area and wear appropriate protective equipment; and —all spills should be cleaned up immediately in accordance with good industrial hygiene practices. See additional comments 1, 2, 3, 4, 5.

FIRE SUPPRESSION AND EXPLOSION PROTECTION SECTOR—TOTAL FLOODING SUBSTITUTES—ACCEPTABLE SUBJECT TO USE CONDITIONS—Continued

End-use	Substitute	Decision	Conditions	Further information
Total flooding	Phosphorous Tribromide (PBr_3).	Acceptable subject to use conditions.	For use only in aircraft engine nacelles.	For establishments manufacturing the agent or filling, installing, or servicing containers or systems, EPA recommends the following: —adequate ventilation should be in place and/or positive pressure, self-contained breathing apparatus (SCBA) should be worn; —training for safe handling procedures should be provided to all employees that would be likely to handle containers of the agent or extinguishing units filled with the agent; and —all spills should be cleaned up immediately in accordance with good industrial hygiene practices. See additional comments 1, 2, 3, 4, 5.

Additional comments:

1—Should conform to relevant OSHA requirements, including 29 CFR 1910, Subpart L, Sections 1910.160 and 1910.162.

2—Per OSHA requirements, protective gear (SCBA) should be available in the event personnel should reenter the area.

3—Discharge testing should be strictly limited to that which is essential to meet safety or performance requirements.

4—The agent should be recovered from the fire protection system in conjunction with testing or servicing, and recycled for later use or destroyed.

5—EPA has no intention of duplicating or displacing OSHA coverage related to the use of personal protective equipment (e.g., respiratory protection), fire protection, hazard communication, worker training or any other occupational safety and health standard with respect to halon substitutes.

[71 FR 56367, Sept. 27, 2006, as amended at 81 FR 86883, Dec. 1, 2016]

APPENDIX P TO SUBPART G OF PART 82—SUBSTITUTES LISTED IN THE SEPTEMBER 27, 2006 FINAL RULE, EFFECTIVE NOVEMBER 27, 2006

FIRE SUPPRESSION AND EXPLOSION PROTECTION SECTOR—TOTAL FLOODING AGENTS—ACCEPTABLE SUBJECT TO NARROWED USE LIMITS

End-use	Substitute	Decision	Conditions	Further information
Total flooding	Gelled Halocarbon/Dry Chemical Suspension with any agent other than ammonium polyphosphate or sodium bicarbonate additive (Envirogel with sodium bicarbonate additive).	Acceptable subject to narrowed use limits.	For use only in normally unoccupied areas.	Use of this agent should be in accordance with the safety guidelines in the latest edition of the NFPA 2001 Standard for Clean Agent Fire Extinguishing Systems, for whichever hydrofluorocarbon gas is employed. Envirogel is listed as a streaming substitute under the generic name Gelled Halocarbon/Dry Chemical Suspension. Envirogel was also previously listed as a total flooding substitute under the same generic name. EPA has found Envirogel with the ammonium polyphosphate additive and Envirogel with the sodium bicarbonate additive to be acceptable as total flooding agents in both occupied and unoccupied areas. See additional comments 1, 2, 3, 4, 5

Additional comments:

1—Should conform to relevant OSHA requirements, including 29 CFR 1910, subpart L, Sections 1910.160 and 1910.162.

2—Per OSHA requirements, protective gear (SCBA) should be available in the event personnel should reenter the area.

3—Discharge testing should be strictly limited to that which is essential to meet safety or performance requirements.

4—The agent should be recovered from the fire protection system in conjunction with testing or servicing, and recycled for later use or destroyed.

5—EPA has no intention of duplicating or displacing OSHA coverage related to the use of personal protective equipment (*e.g.*, respiratory protection), fire protection, hazard communication, worker training or any other occupational safety and health standard with respect to halon substitutes.

[71 FR 56367, Sept. 27, 2006]

APPENDIX Q TO SUBPART G OF PART 82—UNACCEPTABLE SUBSTITUTES LISTED IN THE MARCH 28, 2007 FINAL RULE, EFFECTIVE MAY 29, 2007

FOAM BLOWING UNACCEPTABLE SUBSTITUTES

End-use	Substitute	Decision	Further information
—Rigid polyurethane commercial refrigeration. —Rigid polyurethane sandwich panels ... —Rigid polyurethane slabstock and other foams.	HCFC-22, HCFC-142b as substitutes for HCFC-141b.	Unacceptable [1] ..... Closed cell foam products and products containing closed cell foams manufactured with these substitutes on or before December 1, 2017 may be used after that date.	Alternatives exist with lower or zero-ODP.

FOAM BLOWING UNACCEPTABLE SUBSTITUTES—Continued

End-use	Substitute	Decision	Further information
—Rigid polyurethane and polyisocyanurate laminated boardstock. —Rigid polyurethane appliance ..... —Rigid polyurethane spray and commercial refrigeration, and sandwich panels. —Rigid polyurethane slabstock and other foams. —Polystyrene extruded insulation boardstock and billet. —Phenolic insulation board and bunstock. —Flexible polyurethane ..... —Polystyrene extruded sheet	HCFC-22, HCFC-142b as substitutes for CFCs.	Unacceptable[2] ..... Closed cell foam products and products containing closed cell foams manufactured with these substitutes on or before December 1, 2017 may be used after that date.	Alternatives exist with lower or zero-ODP.

[1] For existing users of HCFC-22 and HCFC-142b as of November 4, 2005 other than in marine applications, the unacceptability determination is effective on March 1, 2008; for existing users of HCFC-22 and HCFC-142b as of November 4, 2005 in marine applications, including marine flotation foam, the unacceptability determination is effective on September 1, 2009. For an existing user of HCFC-22 or HCFC-142b that currently operates in only one facility that it does not own, and is scheduled to transition to a non-ODS, flammable alternative to coincide with a move to a new facility and installation of new process equipment that cannot be completed by March 1, 2008, the unacceptability determination is effective January 1, 2010.

[2] For existing users of HCFC-22 and HCFC-142b in polystyrene extruded insulation boardstock and billet and the other foam end-uses, as of November 4, 2005, the unacceptability determination is effective on January 1, 2010.

[81 FR 86885, Dec. 1, 2016]

APPENDIX R TO SUBPART G OF PART 82—SUBSTITUTES SUBJECT TO USE RESTRICTIONS LISTED IN THE DECEMBER 20, 2011, FINAL RULE, EFFECTIVE FEBRUARY 21, 2012, IN THE APRIL 10, 2015 FINAL RULE, EFFECTIVE MAY 11, 2015, AND IN THE AUGUST 8, 2018 FINAL RULE, EFFECTIVE SEPTEMBER 7, 2018

SUBSTITUTES THAT ARE ACCEPTABLE SUBJECT TO USE CONDITIONS

End-use	Substitute	Decision	Use conditions	Further information
Household refrigerators, freezers, and combination refrigerators and freezers (New equipment only).	Isobutane (R-600a). Propane (R-290). R-441A	Acceptable subject to use conditions.	As of September 7, 2018: ..... These refrigerants may be used only in new equipment designed specifically and clearly identified for the refrigerant (*i.e.,* none of these substitutes may be used as a conversion or ''retrofit'' refrigerant for existing equipment designed for a different refrigerant). These refrigerants may be used only in a refrigerator or freezer, or combination refrigerator and freezer, that meets all requirements listed in the 2nd edition of the Underwriters Laboratories (UL) Standard for Safety: Household and Similar Electrical Appliances—Safety—Part 2–24: Particular Requirements for Refrigerating Appliances, Ice-Cream Appliances and Ice-Makers, UL 60335–2–24, dated April 28, 2017.	Applicable OSHA requirements at 29 CFR part 1910 must be followed, including those at 29 CFR 1910.106 (flammable and combustible liquids), 1910.110 (storage and handling of liquefied petroleum gases), 1910.157 (portable fire extinguishers), and 1910.1000 (toxic and hazardous substances). Proper ventilation should be maintained at all times during the manufacture and storage of equipment containing hydrocarbon refrigerants through adherence to good manufacturing practices as per 29 CFR 1910.106. If refrigerant levels in the air surrounding the equipment rise above one-fourth of the lower flammability limit, the space should be evacuated and reentry should occur only after the space has been properly ventilated. Technicians and equipment manufacturers should wear appropriate personal protective equipment, including chemical goggles and protective gloves, when handling these refrigerants. Special care should be taken to avoid contact with the skin since these refrigerants, like many refrigerants, can cause freeze burns on the skin. A Class B dry powder type fire extinguisher should be kept nearby. Technicians should only use sparkproof tools when working on refrigerators and freezers with these refrigerants. Any recovery equipment used should be designed for flammable refrigerants. Any refrigerant releases should be in a well-ventilated area, such as outside of a building. Only technicians specifically trained in handling flammable refrigerants should service refrigerators and freezers containing these refrigerants. Technicians should gain an understanding of minimizing the risk of fire and the steps to use flammable refrigerants safely.

SUBSTITUTES THAT ARE ACCEPTABLE SUBJECT TO USE CONDITIONS—Continued

End-use	Substitute	Decision	Use conditions	Further information
Retail food refrigerators and freezers (stand-alone units only). (New equipment only)	Isobutane (R–600a). Propane (R–290). R–441A	Acceptable subject to use conditions.	As provided in clauses SB6.1.2 to SB6.1.5 of UL Standard 471, 10th edition, the following markings must be attached at the locations provided and must be permanent: (a) On or near any evaporators that can be contacted by the consumer: ''DANGER—Risk of Fire or Explosion. Flammable Refrigerant Used. Do Not Use Mechanical Devices To Defrost Refrigerator. Do Not Puncture Refrigerant Tubing.''. (b) Near the machine compartment: ''DANGER—Risk of Fire or Explosion. Flammable Refrigerant Used. To Be Repaired Only By Trained Service Personnel. Do Not Puncture Refrigerant Tubing.''. (c) Near the machine compartment: ''CAUTION—Risk of Fire or Explosion. Flammable Refrigerant Used. Consult Repair Manual/Owner's Guide Before Attempting To Service This Product. All Safety Precautions Must be Followed.''. (d) On the exterior of the refrigerator: ''CAUTION—Risk of Fire or Explosion. Dispose of Properly In Accordance With Federal Or Local Regulations. Flammable Refrigerant Used.''. (e) Near any and all exposed refrigerant tubing: ''CAUTION—Risk of Fire or Explosion Due To Puncture Of Refrigerant Tubing; Follow Handling Instructions Carefully. Flammable Refrigerant Used.''. All of these markings must be in letters no less than 6.4 mm (1/4 inch) high. The refrigerator or freezer must have red, Pantone® Matching System (PMS) #185 marked pipes, hoses, and other devices through which the refrigerant is serviced, typically known as the service port, to indicate the use of a flammable refrigerant. This color must be present at all service ports and where service puncturing or otherwise creating an opening from the refrigerant circuit to the atmosphere might be expected (e.g., process tubes). The color mark must extend at least 2.5 centimeters (1 inch) from the compressor and must be replaced if removed.	Room occupants should evacuate the space immediately following the accidental release of this refrigerant. If a service port is added then retail food refrigerators and freezers using these refrigerants should have service aperture fittings that differ from fittings used in equipment or containers using non-flammable refrigerant. ''Differ'' means that either the diameter differs by at least 1/16 inch or the thread direction is reversed (i.e., right-handed vs. left-handed). These different fittings should be permanently affixed to the unit at the point of service and maintained until the end-of-life of the unit, and should not be accessed with an adaptor.

SUBSTITUTES THAT ARE ACCEPTABLE SUBJECT TO USE CONDITIONS—Continued

End-use	Substitute	Decision	Use conditions	Further information
Very low temperature refrigeration. Non-mechanical heat transfer (New equipment only)	Ethane (R–170).	Acceptable subject to use conditions.	This refrigerant may be used only in new equipment specifically designed and clearly identified for the refrigerant (i.e., the substitute may not be used as a conversion or ''retrofit'' refrigerant for existing equipment designed for other refrigerants). This refrigerant may only be used in equipment that meets all requirements in Supplement SB to the 10th edition of the Underwriters Laboratories (UL) Standard for Commercial Refrigerators and Freezers, UL 471, dated November 24, 2010. In cases where the final rule includes requirements more stringent than those of the 10th edition of UL 471, the appliance must meet the requirements of the final rule in place of the requirements in the UL Standard. The charge size for the equipment must not exceed 150 g (5.29 oz) in each circuit.	Applicable OSHA requirements at 29 CFR part 1910 must be followed, including those at 29 CFR 1910.94 (ventilation) and 1910.106 (flammable and combustible liquids), 1910.110 (storage and handling of liquefied petroleum gases), 1910.157 (portable fire extinguishers), and 1910.1000 (toxic and hazardous substances). Proper ventilation should be maintained at all times during the manufacture and storage of equipment containing hydrocarbon refrigerants through adherence to good manufacturing practices as per 29 CFR 1910.106. If refrigerant levels in the air surrounding the equipment rise above one-fourth of the lower flammability limit, the space should be evacuated and reentry should occur only after the space has been properly ventilated. Technicians and equipment manufacturers should wear appropriate personal protective equipment, including chemical goggles and protective gloves, when handling ethane. Special care should be taken to avoid contact with the skin since ethane, like many refrigerants, can cause freeze burns on the skin. A Class B dry powder type fire extinguisher should be kept nearby. Technicians should only use sparkproof tools when working on equipment with flammable refrigerants. Any recovery equipment used should be designed for flammable refrigerants. Any refrigerant releases should be in a well-ventilated area, such as outside of a building. Only technicians specifically trained in handling flammable refrigerants should service equipment containing ethane. Technicians should gain an understanding of minimizing the risk of fire and the steps to use flammable refrigerants safely.

SUBSTITUTES THAT ARE ACCEPTABLE SUBJECT TO USE CONDITIONS—Continued

End-use	Substitute	Decision	Use conditions	Further information
Very low temperature refrigeration. Non-mechanical heat transfer (New equipment only)	Ethane (R–170).	Acceptable subject to use conditions.	As provided in clauses SB6.1.2 to SB6.1.5 of UL Standard 471, 10th edition, the following markings must be attached at the locations provided and must be permanent: (a) On or near any evaporators that can be contacted by the consumer: ''DANGER—Risk of Fire or Explosion. Flammable Refrigerant Used. Do Not Use Mechanical Devices To Defrost Refrigerator. Do Not Puncture Refrigerant Tubing.''. (b) Near the machine compartment: ''DANGER—Risk of Fire or Explosion. Flammable Refrigerant Used. To Be Repaired Only By Trained Service Personnel. Do Not Puncture Refrigerant Tubing.''. (c) Near the machine compartment: ''CAUTION—Risk of Fire or Explosion. Flammable Refrigerant Used. Consult Repair Manual/Owner's Guide Before Attempting To Service This Product. All Safety Precautions Must be Followed.''. (d) On the exterior of the refrigerator: ''CAUTION—Risk of Fire or Explosion. Dispose of Properly In Accordance With Federal Or Local Regulations. Flammable Refrigerant Used.''. (e) Near any and all exposed refrigerant tubing: ''CAUTION—Risk of Fire or Explosion Due To Puncture Of Refrigerant Tubing; Follow Handling Instructions Carefully. Flammable Refrigerant Used.''. All of these markings must be in letters no less than 6.4 mm (1/4 inch) high. The refrigeration equipment must have red, Pantone® Matching System (PMS) #185 marked pipes, hoses, and other devices through which the refrigerant is serviced, typically known as the service port, to indicate the use of a flammable refrigerant. This color must be present at all service ports and where service puncturing or otherwise creating an opening from the refrigerant circuit to the atmosphere might be expected (e.g., process tubes). The color mark must extend at least 2.5 centimeters (1 inch) from the compressor and must be replaced if removed.	Room occupants should evacuate the space immediately following the accidental release of this refrigerant. If a service port is added then refrigeration equipment using this refrigerant should have service aperture fittings that differ from fittings used in equipment or containers using non-flammable refrigerant. ''Differ'' means that either the diameter differs by at least 1/16 inch or the thread direction is reversed (i.e., right-handed vs. left-handed). These different fittings should be permanently affixed to the unit at the point of service and maintained until the end-of-life of the unit, and should not be accessed with an adaptor. Example of non-mechanical heat transfer using this refrigerant would be use in a secondary loop of a thermosiphon.

SUBSTITUTES THAT ARE ACCEPTABLE SUBJECT TO USE CONDITIONS—Continued

End-use	Substitute	Decision	Use conditions	Further information
Vending Machines. (New equipment only)	Isobutane (R–600a). Propane (R–290) R–441A	Acceptable subject to use conditions.	These refrigerants may be used only in new equipment specifically designed and clearly identified for the refrigerants (i.e., none of these substitutes may be used as a conversion or ''retrofit'' refrigerant for existing equipment designed for other refrigerants). Detaching and replacing the old refrigeration circuit from the outer casing of the equipment with a new one containing a new evaporator, condenser, and refrigerant tubing within the old casing is considered ''new'' equipment and not a retrofit of the old, existing equipment. These substitutes may only be used in equipment that meets all requirements in Supplement SA to the 7th edition of the Underwriters Laboratories (UL) Standard for Refrigerated Vending Machines, UL 541, dated December, 2011. In cases where the final rule includes requirements more stringent than those of the 7th edition of UL 541, the appliance must meet the requirements of the final rule in place of the requirements in the UL Standard. The charge size for vending machines must not exceed 150 g (5.29 oz) in each circuit.	Applicable OSHA requirements at 29 part 1910 must be followed, including those at 29 CFR 1910.94 (ventilation) and 1910.106 (flammable and combustible liquids), 1910.110 (storage and handling of liquefied petroleum gases), 1910.157 (portable fire extinguishers), and 1910.1000 (toxic and hazardous substances). Proper ventilation should be maintained at all times during the manufacture and storage of equipment containing hydrocarbon refrigerants through adherence to good manufacturing practices as per 29 CFR 1910.106. If refrigerant levels in the air surrounding the equipment rise above one-fourth of the lower flammability limit, the space should be evacuated and reentry should occur only after the space has been properly ventilated. Technicians and equipment manufacturers should wear appropriate personal protective equipment, including chemical goggles and protective gloves, when handling these refrigerants. Special care should be taken to avoid contact with the skin since these refrigerants, like many refrigerants, can cause freeze burns on the skin. A Class B dry powder type fire extinguisher should be kept nearby. Technicians should only use sparkproof tools when working on refrigeration equipment with flammable refrigerants. Any recovery equipment used should be designed for flammable refrigerants. Any refrigerant releases should be in a well-ventilated area, such as outside of a building. Only technicians specifically trained in handling flammable refrigerants should service refrigeration equipment containing these refrigerants. Technicians should gain an understanding of minimizing the risk of fire and the steps to use flammable refrigerants safely.

SUBSTITUTES THAT ARE ACCEPTABLE SUBJECT TO USE CONDITIONS—Continued

End-use	Substitute	Decision	Use conditions	Further information
Vending Machines. (New equipment only)	Isobutane (R–600a). Propane (R–290) R–441A	Acceptable subject to use conditions.	As provided in clauses SA6.1.2 to SA6.1.5 of UL Standard 541, 7th edition, the following markings must be attached at the locations provided and must be permanent: (a) On or near any evaporators that can be contacted by the consumer: ''DANGER—Risk of Fire or Explosion. Flammable Refrigerant Used. Do Not Use Mechanical Devices To Defrost Refrigerator. Do Not Puncture Refrigerant Tubing.''. (b) Near the machine compartment: ''DANGER—Risk of Fire or Explosion. Flammable Refrigerant Used. To Be Repaired Only By Trained Service Personnel. Do Not Puncture Refrigerant Tubing.''. (c) Near the machine compartment: ''CAUTION—Risk of Fire or Explosion. Flammable Refrigerant Used. Consult Repair Manual/Owner's Guide Before Attempting To Service This Product. All Safety Precautions Must be Followed.''. (d) On the exterior of the refrigerator: ''CAUTION—Risk of Fire or Explosion. Dispose of Properly In Accordance With Federal Or Local Regulations. Flammable Refrigerant Used.''. (e) Near any and all exposed refrigerant tubing: ''CAUTION—Risk of Fire or Explosion Due To Puncture Of Refrigerant Tubing; Follow Handling Instructions Carefully. Flammable Refrigerant Used.''. All of these markings must be in letters no less than 6.4 mm (1/4 inch) high. The refrigeration equipment must have red, Pantone® Matching System (PMS) #185 marked pipes, hoses, and other devices through which the refrigerant is serviced, typically known as the service port, to indicate the use of a flammable refrigerant. This color must be present at all service ports and where service puncturing or otherwise creating an opening from the refrigerant circuit to the atmosphere might be expected (e.g., process tubes). The color mark must extend at least 2.5 centimeters (1 inch) from the compressor and must be replaced if removed.	Room occupants should evacuate the space immediately following the accidental release of this refrigerant. If a service port is added then refrigeration equipment using this refrigerant should have service aperture fittings that differ from fittings used in equipment or containers using non-flammable refrigerant. ''Differ'' means that either the diameter differs by at least 1/16 inch or the thread direction is reversed (i.e., right-handed vs. left-handed). These different fittings should be permanently affixed to the unit at the point of service and maintained until the end-of-life of the unit, and should not be accessed with an adaptor.

SUBSTITUTES THAT ARE ACCEPTABLE SUBJECT TO USE CONDITIONS—Continued

End-use	Substitute	Decision	Use conditions	Further information
Residential and light-commercial air conditioning and heat pumps—self-contained room air conditioners only. (New equipment only)	HFC–32 ..... Propane (R–290) R–441A	Acceptable subject to use conditions.	These refrigerants may be used only in new equipment specifically designed and clearly identified for the refrigerants (i.e., none of these substitutes may be used as a conversion or ''retrofit'' refrigerant for existing equipment designed for other refrigerants) These refrigerants may only be used in equipment that meets all requirements in Supplement SA and Appendices B through F of the 8th edition of the Underwriters Laboratories (UL) Standard for Room Air Conditioners, UL 484, dated August 3, 2012. In cases where the final rule includes requirements more stringent than those of the 8th edition of UL 484, the appliance must meet the requirements of the final rule in place of the requirements in the UL Standard. The charge size for the entire air conditioner must not exceed the maximum refrigerant mass determined according to Appendix F of UL 484, 8th edition for the room size where the air conditioner is used. The charge size for these three refrigerants must in no case exceed 7,960 g (280.8 oz or 17.55 lb) of HFC–32; 1,000 g (35.3 oz or 2.21 lbs) of propane; or 1,000 g (35.3 oz or 2.21 lb) of R–441A. For portable air conditioners, the charge size must in no case exceed 2,450 g (80.0 oz or 5.0 lb) of HFC–32; 300 g (10.6 oz or 0.66 lbs) of propane; or 330 g (11.6 oz or 0.72 lb) of R–441A. The manufacturer must design a charge size for the entire air conditioner that does not exceed the amount specified for the unit's cooling capacity, as specified in Table A, B, C, D, or E of this Appendix.	Applicable OSHA requirements at 29 CFR part 1910 must be followed, including those at 29 CFR 1910.94 (ventilation) and 1910.106 (flammable and combustible liquids), 1910.110 (storage and handling of liquefied petroleum gases), 1910.157 (portable fire extinguishers), and 1910.1000 (toxic and hazardous substances). Proper ventilation should be maintained at all times during the manufacture and storage of equipment containing hydrocarbon refrigerants through adherence to good manufacturing practices as per 29 CFR 1910.106. If refrigerant levels in the air surrounding the equipment rise above one-fourth of the lower flammability limit, the space should be evacuated and reentry should occur only after the space has been properly ventilated. Technicians and equipment manufacturers should wear appropriate personal protective equipment, including chemical goggles and protective gloves, when handling these refrigerants. Special care should be taken to avoid contact with the skin since these refrigerants, like many refrigerants, can cause freeze burns on the skin. A Class B dry powder type fire extinguisher should be kept nearby. Technicians should only use spark-proof tools when working on air conditioning equipment with flammable refrigerants. Any recovery equipment used should be designed for flammable refrigerants. Any refrigerant releases should be in a well-ventilated area, such as outside of a building. Only technicians specifically trained in handling flammable refrigerants should service refrigeration equipment containing these refrigerants. Technicians should gain an understanding of minimizing the risk of fire and the steps to use flammable refrigerants safely.

SUBSTITUTES THAT ARE ACCEPTABLE SUBJECT TO USE CONDITIONS—Continued

End-use	Substitute	Decision	Use conditions	Further information
Residential and light-commercial air conditioning and heat pumps—self-contained room air conditioners only. (New equipment only)	HFC–32 ..... Propane (R–290) R–441A	Acceptable subject to use conditions.	As provided in clauses SA6.1.2 to SA6.1.5 of UL 484, 8th edition, the following markings must be attached at the locations provided and must be permanent:. (a) On the outside of the air conditioner: ''DANGER—Risk of Fire or Explosion. Flammable Refrigerant Used. To Be Repaired Only By Trained Service Personnel. Do Not Puncture Refrigerant Tubing.''. (b) On the outside of the air conditioner: ''CAUTION—Risk of Fire or Explosion. Dispose of Properly In Accordance With Federal Or Local Regulations. Flammable Refrigerant Used.''. (c) On the inside of the air conditioner near the compressor: ''CAUTION—Risk of Fire or Explosion. Flammable Refrigerant Used. Consult Repair Manual/Owner's Guide Before Attempting To Service This Product. All Safety Precautions Must be Followed.''. (d) On the outside of each portable air conditioner: ''WARNING: Appliance hall be installed, operated and stored in a room with a floor area larger the ''X'' m^2 (Y ft^2).'' The value ''X'' on the label must be determined using the minimum room size in m^2 calculated using Appendix F of UL 484, 8th edition. For R–441A, use a lower flammability limit of 0.041 kg/m^3 in calculations in Appendix F of UL 484, 8th edition. All of these markings must be in letters no less than 6.4 mm (1/4 inch) high. The air conditioning equipment must have red, Pantone® Matching System (PMS) #185 marked pipes, hoses, and other devices through which the refrigerant is serviced, typically known as the service port, to indicate the use of a flammable refrigerant. This color must be present at all service ports and where service puncturing or otherwise creating an opening from the refrigerant circuit to the atmosphere might be expected (e.g., process tubes). The color mark must extend at least 2.5 centimeters (1 inch) from the compressor and must be replaced if removed.	Room occupants should evacuate the space immediately following the accidental release of this refrigerant. If a service port is added then air conditioning equipment using this refrigerant should have service aperture fittings that differ from fittings used in equipment or containers using non-flammable refrigerant. ''Differ'' means that either the diameter differs by at least 1/16 inch or the thread direction is reversed (i.e., right-handed vs. left-handed). These different fittings should be permanently affixed to the unit at the point of service and maintained until the end-of-life of the unit, and should not be accessed with an adaptor. Air conditioning equipment in this category includes: Window air conditioning units. Portable room air conditioners. Packaged terminal air conditioners and heat pumps.

Note: The use conditions in this appendix contain references to certain standards from Underwriters Laboratories Inc. (UL). The standards are incorporated by reference, and the referenced sections are made part of the regulations in part 82:

1. UL 471. Commercial Refrigerators and Freezers. 10th edition. Supplement SB: Requirements for Refrigerators and Freezers Employing a Flammable Refrigerant in the Refrigerating System. Underwriters Laboratories, Inc. November 24, 2010.
2. UL 484. Room Air Conditioners. 8th edition. Supplement SA: Requirements for Room Air Conditioners Employing a Flammable Refrigerant in the Refrigerating System and Appendices B through F. December 21, 2007, with changes through August 3, 2012.
3. UL 541. Refrigerated Vending Machines. 7th edition. Supplement SA: Requirements for Refrigerated Venders Employing a Flammable Refrigerant in the Refrigerating System. December 30, 2011.
4. UL Standard 60335–2–24. Standard for Safety: Requirements for Household and Similar Electrical Appliances,—Safety—Part 2–24: Particular Requirements for Refrigerating Appliances, Ice-Cream Appliances and Ice-Makers, Second edition, dated April 28, 2017.

The Director of the Federal Register approves the incorporation by reference of the material under ''Use Conditions'' in the table ''SUBSTITUTES THAT ARE ACCEPTABLE

SUBJECT TO USE CONDITIONS'' (5 U.S.C. 552(a) and 1 CFR part 51). Copies of UL Standards 471, 484, 541, and 60335–2–24, may be purchased by mail at: COMM 2000, 151 Eastern Avenue, Bensenville, IL 60106; Email: *orders@shopulstandards.com;* Telephone: 1–888–853–3503 in the U.S. or Canada (other countries dial 1–415–352–2178); internet address: *http://www.shopulstandards.com/Catalog.aspx*.

You may inspect a copy at U.S. EPA's Air Docket; EPA West Building, Room 3334; 1301 Constitution Ave. NW, Washington, DC or at the National Archives and Records Administration (NARA). For questions regarding access to these standards, the telephone number of EPA'S Air Docket is 202–566–1742. For information on the availability of this material at NARA, call 202–741–6030, or go to: *https://www.archives.gov/federal-register/cfr/ibr-locations.html*.

Table A. Maximum Design Charge Sizes for Window Air Conditioners

Refrigerant	Maximum design charge size (kg)													
	Associated cooling capacity (BTU/hr)													
	5,000	6,000	7,000	8,000	9,000	10,000	12,000	14,000	18,000	21,000	23,000	24,000	30,000	34,000
R-32	1.73	2.12	2.74	3.00	3.24	3.47	3.68	4.07	4.59	5.48	6.01	6.49	6.72	7.76
R-290	0.13	0.16	0.20	0.22	0.24	0.26	0.27	0.30	0.34	0.40	0.44	0.48	0.50	0.57
R-441A	0.14	0.17	0.22	0.24	0.26	0.28	0.30	0.33	0.37	0.44	0.49	0.53	0.54	0.63

Note: For use with self-contained air conditioning units or heat pumps with an evaporator at least 0.6 and no more than 1.0 m above the floor. Cooling capacities between those in the table are to be linearly interpolated between the next smaller and larger capacities listed in the table.

Table B. Maximum Design Charge Sizes for Packaged Terminal Air Conditioners and Packaged Terminal Heat Pumps

Refrigerant	Maximum design charge size (kg)													
	Associated cooling capacity (BTU/hr)													
	5,000	6,000	7,000	8,000	9,000	10,000	12,000	14,000	18,000	21,000	23,000	24,000	30,000	34,000
R-32	1.04	1.27	1.65	1.80	1.95	2.08	2.21	2.44	2.75	3.29	3.60	3.89	4.03	4.65
R-290	0.08	0.09	0.12	0.13	0.14	0.15	0.16	0.18	0.20	0.24	0.27	0.29	0.30	0.34
R-441A	0.08	0.10	0.13	0.15	0.16	0.17	0.18	0.20	0.22	0.27	0.29	0.32	0.33	0.38

Note: For use with self-contained air conditioning units or heat pumps with an evaporator no more than 0.6 m above the floor. Cooling capacities between those in the table are to be linearly interpolated between the next smaller and larger capacities listed in the table.

Table C. Maximum Design Charge Sizes for Wall-Mounted AC Units

Refrigerant	Maximum Design Charge Size (kg)													
	Associated capacity (BTU/hr)													
	5,000	6,000	7,000	8,000	9,000	10,000	12,000	14,000	18,000	21,000	23,000	24,000	30,000	34,000
R-32	3.12	3.82	4.94	5.41	5.84	6.24	6.62	7.32	7.96	7.96	7.96	7.96	7.96	7.96
R-290	0.23	0.28	0.36	0.40	0.43	0.46	0.49	0.54	0.61	0.73	0.80	0.86	0.89	1.00
R-441A	0.25	0.31	0.40	0.44	0.47	0.51	0.54	0.59	0.67	0.80	0.88	0.95	0.98	1.00

Note: For use with self-contained air conditioners or heat pumps with an evaporator at least 1.0 and no more than 1.8 m above the floor. Cooling capacities between those in the table are to be linearly interpolated between the next smaller and larger capacities listed in the table.

Table D. Maximum Design Charge Sizes for Ceiling-Mounted AC Units

Refrigerant	Maximum Design Charge Size (kg)													
	Associated capacity (BTU/hr)													
	5,000	6,000	7,000	8,000	9,000	10,000	12,000	14,000	18,000	21,000	23,000	24,000	30,000	34,000
R-32	3.82	4.67	6.03	6.61	7.14	7.63	7.96	7.96	7.96	7.96	7.96	7.96	7.96	7.96
R-290	0.28	0.34	0.44	0.49	0.53	0.56	0.60	0.66	0.74	0.89	0.97	1.00	1.00	1.00
R-441A	0.31	0.38	0.49	0.54	0.58	0.62	0.66	0.73	0.82	0.98	1.00	1.00	1.00	1.00

Note: For use with self-contained air conditioners or heat pumps with an evaporator more than 1.8 m above the floor. Cooling capacities between those in the table are to be linearly interpolated between the next smaller and larger capacities listed in the table.

Table E. Maximum Design Charge Sizes for Portable Room AC Units

Refrigerant	Maximum Design Charge Size (kg)													
	Associated capacity (BTU/hr)													
	5,000	6,000	7,000	8,000	9,000	10,000	12,000	14,000	18,000	21,000	23,000	24,000	30,000	34,000
R-32	1.56	2.35	2.45	2.45	2.45	2.45	2.45	2.45	2.45	2.45	2.45	2.45	2.45	2.45
R-290	0.19	0.29	0.30	0.30	0.30	0.30	0.30	0.30	0.30	0.30	0.30	0.30	0.30	0.30
R-441A	0.21	0.31	0.33	0.33	0.33	0.33	0.33	0.33	0.33	0.33	0.33	0.33	0.33	0.33

Note: For use with non-fixed portable room air conditioners or heat pumps. Cooling capacities between those in the table are to be linearly interpolated between the next smaller and larger capacities listed in the table.

[80 FR 19491, Apr. 10, 2015, as amended at 83 FR 38975, Aug. 8, 2018]

APPENDIX S TO SUBPART G OF PART 82—SUBSTITUTES LISTED IN THE SEPTEMBER 19, 2012 FINAL RULE, EFFECTIVE DECEMBER 18, 2012.

FIRE SUPPRESSION AND EXPLOSION PROTECTION SECTOR—ACCEPTABLE SUBJECT TO USE CONDITIONS

End-Use	Substitute	Decision	Conditions	Further information
Total Flooding	Powdered Aerosol F (KSA®) as a substitute for Halon 1301.	Acceptable subject to use conditions.	For use only in normally unoccupied areas.	Use of this agent should be in accordance with the safety guidelines in the latest edition of the NFPA 2010 standard for Aerosol Extinguishing Systems. For establishments filling, installing, servicing, using, or disposing of containers or systems to be used in total flooding applications, EPA recommends the following: —appropriate protective clothing (e.g., goggles, particulate removing respirators, and gloves) should be worn during the installation and maintenance of the extinguishing units filled with the agent or during clean up and disposal of this agent; —training should be provided to all employees that would be likely to handle containers of the agent or extinguishing units filled with the agent, required to clean up after discharge or required to work near spaces protected by Powdered Aerosol F. Releases in all settings should be limited to an appropriate design concentration for the protected space so that increased blood pH level would not adversely affect exposed individuals. Exposed individuals should be given an electrolyte solution to drink afterwards to restore the pH within the appropriate range. Each extinguisher should be clearly labeled with the potential hazards from use and safe handling procedures. In the case of an accidental spill, the area should be well-ventilated, and workers should wear protective equipment while following good industrial hygiene practices for clean-up and disposal. See additional comments 1, 2, 3, 4.

FIRE SUPPRESSION AND EXPLOSION PROTECTION SECTOR—ACCEPTABLE SUBJECT TO USE CONDITIONS—Continued

End-Use	Substitute	Decision	Conditions	Further information
Total Flooding	Powdered Aerosol G (Dry Sprinkler Powdered Aerosol (DSPA) Fixed Generators) as a substitute for Halon 1301.	Acceptable subject to use conditions.	For use only in normally unoccupied areas.	Use of this agent should be in accordance with the safety guidelines in the latest edition of the NFPA 2010 standard for Aerosol Extinguishing Systems. For establishments filling, installing, servicing, using or disposing of generator units or systems in total flooding applications, EPA recommends the appropriate protective clothing (e.g., goggles, particulate removing respirators, and gloves) should be worn during the installation and maintenance of the extinguishing units filled with the agent or during clean up and disposal of this agent. Powdered Aerosol G should be collected by hand (e.g., with a dustpan and duster or a vacuum cleaner); waste should be collected in suitable drums for disposal and the area should be washed clean with sufficient quantities of water; and training should be provided to all employees that would be likely to handle the agent or generator units filled containing the agent, required to clean up after discharge or required to work near spaces protected by Powdered Aerosol G fixed generator total flooding systems. In accordance with Department of Health and Human Services regulations (42 CFR Part 84), safety glasses and a NIOSH/CDC-approved N99 respirator are required for individuals installing Powdered Aerosol G fixed systems. Each generator unit should be clearly labeled with the potential hazards from use and safe handling procedures. In the case of an accidental discharge, the area should be well-ventilated, and workers should wear protective equipment while following good industrial hygiene practices for clean-up and disposal. See additional comments 1, 2, 3, 4.

Additional comments:

1—Should conform to relevant OSHA requirements, including 29 CFR 1910, Subpart L, Sections 1910.160 and 1910.162.

2—Per OSHA requirements, protective gear (SCBA) should be available in the event personnel should reenter the area.

3—The agent should be recovered from the fire protection system in conjunction with testing or servicing, and recycled for later use or destroyed.

4—EPA has no intention of duplicating or displacing OSHA coverage related to the use of personal protective equipment (e.g., respiratory protection), fire protection, hazard communication, worker training or any other occupational safety and health standard with respect to halon substitutes.

[77 FR 58043, Sept. 19, 2012;

APPENDIX T TO SUBPART G OF PART 82—SUBSTITUTES LISTED IN THE APRIL 29, 2013 FINAL RULE, EFFECTIVE MAY 29, 2013.

FIRE SUPPRESSION AND EXPLOSION PROTECTION SECTOR—ACCEPTABLE SUBJECT TO NARROWED USE LIMITS

End-use	Substitute	Decision	Conditions	Further Information
Streaming	C7 Fluoro-ketone as a substitute for Halon 1211.	Acceptable subject to narrowed use limits.	For use only in non-residential applications.	Use of this agent should be in accordance with the latest edition of NFPA Standard 10 for Portable Fire Extinguishers. For operations that fill canisters to be used in streaming applications, EPA recommends the following: —Adequate ventilation should be in place; —All spills should be cleaned up immediately in accordance with good industrial hygiene practices; and —Training for safe handling procedures should be provided to all employees that would be likely to handle containers of the agent or extinguishing units filled with the agent. See additional comments 1, 2, 3, 4.

Additional comments:

1—Should conform to relevant OSHA requirements, including 29 CFR 1910, Subpart L, Sections 1910.160 and 1910.162.

2—Per OSHA requirements, protective gear (SCBA) should be available in the event personnel should reenter the area.

3—The agent should be recovered from the fire protection system in conjunction with testing or servicing, and recycled for later use or destroyed.

4—EPA has no intention of duplicating or displacing OSHA coverage related to the use of personal protective equipment (e.g., respiratory protection), fire protection, hazard communication, worker training or any other occupational safety and health standard with respect to halon substitutes.

[78 FR 25002, Apr. 29, 2013]

APPENDIX U TO SUBPART G OF PART 82—UNACCEPTABLE SUBSTITUTES AND SUBSTITUTES SUBJECT TO USE RESTRICTIONS LISTED IN THE JULY 20, 2015 FINAL RULE, EFFECTIVE AUGUST 19, 2015

AEROSOLS—UNACCEPTABLE SUBSTITUTES

End-use	Substitute	Decision	Further information
Propellants	HFC–125	Unacceptable as of January 1, 2016.	HFC–125 has a Chemical Abstracts Service Registry Number (CAS Reg. No.) of 354–33–6 and it is also known by the name 1,1,1,2,2-pentafluoropropane. HFC–125 has a GWP of 3,500. Other substitutes will be available for this end-use with lower overall risk to human health and the environment by the status change date. Products using this propellant that are manufactured prior to January 1, 2016 may be sold, imported, exported, distributed and used after that date.
Propellants	HFC–134a	Unacceptable as of July 20, 2016, except uses listed as acceptable, subject to use conditions.	HFC–134a has a Chemical Abstracts Service Registry Number (CAS Reg. No.) of 811–97–2 and it is also known by the name 1,1,1,2-tetrafluoropropane. HFC–134a has a GWP of 1,430. Other substitutes will be available for this end-use with lower overall risk to human health and the environment by the status change date. Products using this propellant that are manufactured prior to July 20, 2016 may be sold, imported, exported, distributed and used after that date.

AEROSOLS—UNACCEPTABLE SUBSTITUTES—Continued

End-use	Substitute	Decision	Further information
Propellants	HFC–227ea and blends of HFC–134a and HFC–227ea.	Unacceptable as of July 20, 2016, except uses listed as acceptable, subject to use conditions.	HFC–227ea has a Chemical Abstracts Service Registry Number (CAS Reg. No.) of 431–89–0 and it is also known by the name 1,1,1,2,3,3,3-heptafluoropropane. HFC–134a has a Chemical Abstracts Service Registry Number (CAS Reg. No.) of 811–97–2 and it is also known by the name 1,1,1,2-tetrafluoropropane. HFC–227ea and HFC–134a have GWPs of 3,220 and 1,430, respectively. Other substitutes will be available for this end-use with lower overall risk to human health and the environment by the status change date. Products using these propellants that are manufactured prior to July 20, 2016 may be sold, imported, exported, distributed and used after that date.
Propellants	HCFC–22 and HCFC–142b.	Unacceptable effective September 18, 2015.	Use or introduction into interstate commerce of virgin HCFC–22 and HCFC–142b for aerosols is prohibited as of January 1, 2010 under EPA's regulations at 40 CFR part 82 subpart A. These propellants have ozone depletion potentials of 0.055 and 0.065, respectively.
Solvents	HCFC–141b and blends thereof.	Unacceptable effective September 18, 2015.	Use or introduction into interstate commerce of virgin HCFC–141b for aerosols is prohibited as of January 1, 2015 under EPA's regulations at 40 CFR part 82 subpart A. HCFC–141b has an ozone depletion potential of 0.11.

SUBSTITUTES ACCEPTABLE SUBJECT TO USE CONDITIONS

End-use	Substitute	Decision	Use conditions	Further information
Propellants	HFC–134a	Acceptable subject to use conditions.	The classes of products listed below are acceptable for use from July 20, 2016 through December 31, 2017 and are unacceptable thereafter. • products for functional testing of smoke detectors. • products for which new formulations require governmental review, including: EPA pesticide registration, approval for conformance with military or space agency specifications, or FDA approval (other than MDIs). The classes of products listed below are acceptable for use and other uses are unacceptable as of July 20, 2016: • metered dose inhalers approved by the U.S. Food and Drug Administration for medical purposes. • cleaning products for removal of grease, flux and other soils from electrical equipment or electronics. • refrigerant flushes • products for sensitivity testing of smoke detectors. • lubricants and freeze sprays for electrical equipment or electronics.	HFC–134a has a Chemical Abstracts Service Registry Number (CAS Reg. No.) of 811–97–2 and it is also known by the name 1,1,1,2-tetrafluoropropane. HFC–134a has a GWP of 1,430. Use is allowed for the specified uses because of the technical and safety demands in these applications. Aerosol products using this propellant that are manufactured prior to July 20, 2016, may be sold, imported, exported, distributed and used after that date.

SUBSTITUTES ACCEPTABLE SUBJECT TO USE CONDITIONS—Continued

End-use	Substitute	Decision	Use conditions	Further information
			• sprays for aircraft maintenance. • sprays containing corrosion preventive compounds used in the maintenance of aircraft, electrical equipment or electronics, or military equipment. • pesticides for use near electrical wires or in aircraft, in total release insecticide foggers, or in certified organic use pesticides for which EPA has specifically disallowed all other lower-GWP propellants. • mold release agents and mold cleaners. • lubricants and cleaners for spinnerettes for synthetic fabrics. • duster sprays specifically for removal of dust from photographic negatives, semiconductor chips, specimens under electron microscopes, and energized electrical equipment. • adhesives and sealants in large canisters. • document preservation sprays. • wound care sprays. • topical coolant sprays for pain relief. • products for removing bandage adhesives from skin.	
Propellants	HFC–227ea and blends of HFC–227ea and HFC–134a.	Acceptable subject to use conditions.	Acceptable for use in metered dose inhalers approved by the U.S. Food and Drug Administration for medical purposes and unacceptable for all other uses as of July 20, 2016.	HFC–227ea has a Chemical Abstracts Service Registry Number (CAS Reg. No.) of 431–89–0 and it is also known by the name 1,1,1,2,3,3,3-heptafluoropropane. HFC–227ea has a GWP of 3,220. Aerosol products using this propellant that are manufactured prior to July 20, 2016 may be sold, imported, exported, distributed and used after that date.

REFRIGERATION AND AIR CONDITIONING—UNACCEPTABLE SUBSTITUTES

End-use	Substitute	Decision	Further information
Retail food refrigeration (supermarket systems) (new).	HFC–227ea, R–404A, R–407B, R–421B, R–422A, R–422C, R–422D, R–428A, R–434A, R–507A.	Unacceptable as of January 1, 2017.	These refrigerants have GWPs ranging from 2,729 to 3,985. Other substitutes will be available for this end-use with lower overall risk to human health and the environment by the status change date.
Retail food refrigeration (supermarket systems) (retrofit).	R–404A, R–407B, R–421B, R–422A, R–422C, R–422D, R–428A, R–434A, R–507A.	Unacceptable as of July 20, 2016.	These refrigerants have GWPs ranging from 2,729 to 3,985. Other substitutes will be available for this end-use with lower overall risk to human health and the environment by the status change date.

REFRIGERATION AND AIR CONDITIONING—UNACCEPTABLE SUBSTITUTES—Continued

End-use	Substitute	Decision	Further information
Retail food refrigeration (remote condensing units) (new).	HFC–227ea, R–404A, R–407B, R–421B, R–422A, R–422C, R–422D, R–428A, R–434A, R–507A.	Unacceptable as of January 1, 2018.	These refrigerants have GWPs ranging from 2,729 to 3,985. Other substitutes will be available for this end-use with lower overall risk to human health and the environment by the status change date.
Retail food refrigeration (remote condensing units) (retrofit).	R–404A, R–407B, R–421B, R–422A, R–422C, R–422D, R–428A, R–434A, R–507A.	Unacceptable as of July 20, 2016.	These refrigerants have GWPs ranging from 2,729 to 3,985. Other substitutes will be available for this end-use with lower overall risk to human health and the environment by the status change date.
Retail food refrigeration (stand-alone medium-temperature units with a compressor capacity below 2,200 Btu/hr and not containing a flooded evaporator) (new).	FOR12A, FOR12B, HFC–134a, HFC–227ea, KDD6, R–125/290/134a/600a (55.0/1.0/42.5/1.5), R–404A, R–407A, R–407B, R–407C, R–407F, R–410A, R–410B, R–417A, R–421A, R–421B, R–422A, R–422B, R–422C, R–422D, R–424A, R–426A, R–428A, R–434A, R–437A, R–438A, R–507A, RS-24 (2002 formulation), RS-44 (2003 formulation), SP34E, THR-03.	Unacceptable as of January 1, 2019.	These refrigerants have GWPs ranging from approximately 900 to 3,985. Other substitutes will be available for this end-use with lower overall risk to human health and the environment by the status change date. ''Medium-temperature'' refers to equipment that maintains food or beverages at temperatures above 32 °F (0 °C).
Retail food refrigeration (stand-alone medium-temperature units with a compressor capacity below 2,200 Btu/hr and containing a flooded evaporator) (new).	FOR12A, FOR12B, HFC–134a, HFC–227ea, KDD6, R–125/290/134a/600a (55.0/1.0/42.5/1.5), R–404A, R–407A, R–407B, R–407C, R–407F, R–410A, R–410B, R–417A, R–421A, R–421B, R–422A, R–422B, R–422C, R–422D, R–424A, R–426A, R–428A, R–434A, R–437A, R–438A, R–507A, RS-24 (2002 formulation), RS-44 (2003 formulation), SP34E, THR-03.	Unacceptable as of January 1, 2020.	These refrigerants have GWPs ranging from approximately 900 to 3,985. Other substitutes will be available for this end-use with lower overall risk to human health and the environment by the status change date. ''Medium-temperature'' refers to equipment that maintains food or beverages at temperatures above 32 °F (0 °C).
Retail food refrigeration (stand-alone medium-temperature units with a compressor capacity equal to or greater than 2,200 Btu/hr) (new).	FOR12A, FOR12B, HFC–134a, HFC–227ea, KDD6, R–125/290/134a/600a (55.0/1.0/42.5/1.5), R–404A, R–407A, R–407B, R–407C, R–407F, R–410A, R–410B, R–417A, R–421A, R–421B, R–422A, R–422B, R–422C, R–422D, R–424A, R–426A, R–428A, R–434A, R–437A, R–438A, R–507A, RS-24 (2002 formulation), RS-44 (2003 formulation), SP34E, THR-03.	Unacceptable as of January 1, 2020.	These refrigerants have GWPs ranging from approximately 900 to 3,985. Other substitutes will be available for this end-use with lower overall risk to human health and the environment by the status change date. ''Medium-temperature'' refers to equipment that maintains food or beverages at temperatures above 32 °F (0 °C).
Retail food refrigeration (stand-alone low-temperature units) (new).	HFC–227ea, KDD6, R–125/290/134a/600a (55.0/1.0/42.5/1.5), R–404A, R–407A, R–407B, R–407C, R–407F, R–410A, R–410B, R–417A, R–421A, R–421B, R–422A, R–422B, R–422C, R–422D, R–424A, R–428A, R–434A, R–437A, R–438A, R–507A, RS–44 (2003 formulation).	Unacceptable as of January 1, 2020.	These refrigerants have GWPs ranging from approximately 1,800 to 3,985. Other substitutes will be available for this end-use with lower overall risk to human health and the environment by the status change date. ''Low-temperature'' refers to equipment that maintains food or beverages at temperatures at or below 32 °F (0 °C).
Retail food refrigeration (stand-alone units only) (retrofit).	R–404A, R–507A	Unacceptable as of July 20, 2016.	These refrigerants have GWPs of approximately 3,922 and 3,985. Other substitutes will be available for this end-use with lower overall risk to human health and the environment by the status change date.
Vending machines (new only).	FOR12A, FOR12B, HFC–134a, KDD6, R–125/290/134a/600a (55.0/1.0/42.5/1.5), R–404A, R–407C, R–410A, R–410B, R–417A, R–421A, R–422B, R–422C, R–422D, R–426A, R–437A, R–438A, R–507A, RS-24 (2002 formulation), SP34E.	Unacceptable as of January 1, 2019.	These refrigerants have GWPs ranging from approximately 1,100 to 3,985. Other substitutes will be available for this end-use with lower overall risk to human health and the environment by the status change date.
Vending machines (retrofit only).	R–404A, R–507A.	Unacceptable as of July 20, 2016.	These refrigerants have GWPs of approximately 3,922 and 3,985. Other substitutes will be available for this end-use with lower overall risk to human health and the environment by the status change date.

FOAM BLOWING AGENTS—SUBSTITUTES ACCEPTABLE SUBJECT TO NARROWED USE LIMITS

End-use	Substitute	Decision	Narrowed use limits	Further information
Rigid Polyurethane: Appliance.	HFC-134a, HFC-245fa, HFC-365mfc and blends thereof; Formacel TI, and Formacel Z-6.	Acceptable Subject to Narrowed Use Limits.	Acceptable from January 1, 2020, until January 1, 2022, in military applications and until January 1, 2025, in space- and aeronautics-related applications where reasonable efforts have been made to ascertain that other alternatives are not technically feasible due to performance or safety requirements. Closed cell foam products and products containing closed cell foams manufactured with these substitutes on or before January 1, 2022, for military applications or on and before January 1, 2025, in space- and aeronautics-related applications, may be used after those dates.	Users are required to document and retain the results of their technical investigation of alternatives for the purpose of demonstrating compliance. Information should include descriptions of: • Process or product in which the substitute is needed; • Substitutes examined and rejected; • Reason for rejection of other alternatives, e.g., performance, technical or safety standards; and/or • Anticipated date other substitutes will be available and projected time for switching.
Rigid Polyurethane: Commercial Refrigeration and Sandwich Panels.	HFC-134a, HFC-245fa, HFC-365mfc, and blends thereof; Formacel TI, and Formacel Z-6.	Acceptable Subject to Narrowed Use Limits.	Acceptable from January 1, 2020, until January 1, 2022, in military applications and until January 1, 2025, in space- and aeronautics-related applications where reasonable efforts have been made to ascertain that other alternatives are not technically feasible due to performance or safety requirements. Closed cell foam products and products containing closed cell foams manufactured with these substitutes on or before January 1, 2022, for military applications or on and before January 1, 2025, in space- and aeronautics-related applications, may be used after those dates.	Users are required to document and retain the results of their technical investigation of alternatives for the purpose of demonstrating compliance. Information should include descriptions of: • Process or product in which the substitute is needed; • Substitutes examined and rejected; • Reason for rejection of other alternatives, e.g., performance, technical or safety standards; and/or • Anticipated date other substitutes will be available and projected time for switching.

Flexible Polyurethane	HFC-134a, HFC-245fa, HFC-365mfc, and blends thereof.	Acceptable Subject to Narrowed Use Limits.	Acceptable from January 1, 2017, until January 1, 2022, in military applications and until January 1, 2025, in space- and aeronautics-related applications where reasonable efforts have been made to ascertain that other alternatives are not technically feasible due to performance or safety requirements.	Users are required to document and retain the results of their technical investigation of alternatives for the purpose of demonstrating compliance. Information should include descriptions of: • Process or product in which the substitute is needed; • Substitutes examined and rejected; • Reason for rejection of other alternatives, e.g., performance, technical or safety standards; and/or • Anticipated date other substitutes will be available and projected time for switching.
Rigid Polyurethane: Slabstock and Other.	HFC-134a, HFC-245fa, HFC-365mfc and blends thereof; Formacel TI, and Formacel Z-6.	Acceptable Subject to Narrowed Use Limits.	Acceptable from January 1, 2019, until January 1, 2022, in military applications and until January 1, 2025, in space- and aeronautics-related applications where reasonable efforts have been made to ascertain that other alternatives are not technically feasible due to performance or safety requirements. Closed cell foam products and products containing closed cell foams manufactured with these substitutes on or before January 1, 2022, for military applications or on and before January 1, 2025, in space- and aeronautics-related applications, may be used after those dates.	Users are required to document and retain the results of their technical investigation of alternatives for the purpose of demonstrating compliance. Information should include descriptions of: • Process or product in which the substitute is needed; • Substitutes examined and rejected; • Reason for rejection of other alternatives, e.g., performance, technical or safety standards; and/or • Anticipated date other substitutes will be available and projected time for switching.

FOAM BLOWING AGENTS—SUBSTITUTES ACCEPTABLE SUBJECT TO NARROWED USE LIMITS—Continued

End-use	Substitute	Decision	Narrowed use limits	Further information
Rigid Polyurethane and Polyisocyanurate Laminated Boardstock.	HFC-134a, HFC-245fa, HFC-365mfc and blends thereof.	Acceptable Subject to Narrowed Use Limits.	Acceptable from January 1, 2017, until January 1, 2022, in military applications and until January 1, 2025, in space- and aeronautics-related applications where reasonable efforts have been made to ascertain that other alternatives are not technically feasible due to performance or safety requirements. Closed cell foam products and products containing closed cell foams manufactured with these substitutes on or before January 1, 2022, for military applications or on and before January 1, 2025, in space- and aeronautics-related applications, may be used after those dates.	Users are required to document and retain the results of their technical investigation of alternatives for the purpose of demonstrating compliance. Information should include descriptions of: • Process or product in which the substitute is needed; • Substitutes examined and rejected; • Reason for rejection of other alternatives, e.g., performance, technical or safety standards; and/or • Anticipated date other substitutes will be available and projected time for switching.
Rigid Polyurethane: Marine Flotation Foam.	HFC-134a, HFC-245fa, HFC-365mfc and blends thereof; Formacel TI, and Formacel Z-6.	Acceptable Subject to Narrowed Use Limits.	Acceptable from January 1, 2020, until January 1, 2022, in military applications and until January 1, 2025, in space- and aeronautics-related applications where reasonable efforts have been made to ascertain that other alternatives are not technically feasible due to performance or safety requirements. Closed cell foam products and products containing closed cell foams manufactured with these substitutes on or before January 1, 2022, for military applications or on and before January 1, 2025, in space- and aeronautics-related applications, may be used after those dates.	Users are required to document and retain the results of their technical investigation of alternatives for the purpose of demonstrating compliance. Information should include descriptions of: • Process or product in which the substitute is needed; • Substitutes examined and rejected; • Reason for rejection of other alternatives, e.g., performance, technical or safety standards; and/or • Anticipated date other substitutes will be available and projected time for switching.

Polystyrene: Extruded Sheet.	HFC-134a, HFC-245fa, HFC-365mfc, and blends thereof; Formacel TI, and Formacel Z-6.	Acceptable Subject to Narrowed Use Limits.	Acceptable from January 1, 2017, until January 1, 2022, in military applications and until January 1, 2025, in space- and aeronautics-related applications where reasonable efforts have been made to ascertain that other alternatives are not technically feasible due to performance or safety requirements. Closed cell foam products and products containing closed cell foams manufactured with these substitutes on or before January 1, 2022, for military applications or on and before January 1, 2025, in space- and aeronautics-related applications, may be used after those dates.	Users are required to document and retain the results of their technical investigation of alternatives for the purpose of demonstrating compliance. Information should include descriptions of: • Process or product in which the substitute is needed; • Substitutes examined and rejected; • Reason for rejection of other alternatives, e.g., performance, technical or safety standards; and/or • Anticipated date other substitutes will be available and projected time for switching.
Polystyrene: Extruded Boardstock and Billet.	HFC-134a, HFC-245fa, HFC-365mfc, and blends thereof; Formacel TI, Formacel B, and Formacel Z-6.	Acceptable Subject to Narrowed Use Limits.	Acceptable from January 1, 2021, until January 1, 2022, in military applications and until January 1, 2025, in space- and aeronautics-related applications where reasonable efforts have been made to ascertain that other alternatives are not technically feasible due to performance or safety requirements. Closed cell foam products and products containing closed cell foams manufactured with these substitutes on or before January 1, 2022, for military applications or on and before January 1, 2025, in space- and aeronautics-related applications, may be used after those dates.	Users are required to document and retain the results of their technical investigation of alternatives for the purpose of demonstrating compliance. Information should include descriptions of: • Process or product in which the substitute is needed; • Substitutes examined and rejected; • Reason for rejection of other alternatives, e.g., performance, technical or safety standards; and/or • Anticipated date other substitutes will be available and projected time for switching.

FOAM BLOWING AGENTS—SUBSTITUTES ACCEPTABLE SUBJECT TO NARROWED USE LIMITS—Continued

End-use	Substitute	Decision	Narrowed use limits	Further information
Integral Skin Polyurethane.	HFC-134a, HFC-245fa, HFC-365mfc, and blends thereof; Formacel TI, and Formacel Z-6.	Acceptable Subject to Narrowed Use Limits.	Acceptable from January 1, 2017, until January 1, 2022, in military applications and until January 1, 2025, in space- and aeronautics-related applications where reasonable efforts have been made to ascertain that other alternatives are not technically feasible due to performance or safety requirements.	Users are required to document and retain the results of their technical investigation of alternatives for the purpose of demonstrating compliance. Information should include descriptions of: • Process or product in which the substitute is needed; • Substitutes examined and rejected; • Reason for rejection of other alternatives, e.g., performance, technical or safety standards; and/or • Anticipated date other substitutes will be available and projected time for switching.
Polyolefin	HFC-134a, HFC-245fa, HFC-365mfc, and blends thereof; Formacel TI, and Formacel Z-6.	Acceptable Subject to Narrowed Use Limits.	Acceptable from January 1, 2020, until January 1, 2022, in military applications and until January 1, 2025, in space- and aeronautics-related applications where reasonable efforts have been made to ascertain that other alternatives are not technically feasible due to performance or safety requirements. Closed cell foam products and products containing closed cell foams manufactured with these substitutes on or before January 1, 2022, for military applications or on and before January 1, 2025, in space- and aeronautics-related applications, may be used after those dates.	Users are required to document and retain the results of their technical investigation of alternatives for the purpose of demonstrating compliance. Information should include descriptions of: • Process or product in which the substitute is needed; • Substitutes examined and rejected; • Reason for rejection of other alternatives, e.g., performance, technical or safety standards; and/or • Anticipated date other substitutes will be available and projected time for switching.

Phenolic Insulation Board and Bunstock.	HFC-143a, HFC-134a, HFC-245fa, HFC-365mfc, and blends thereof.	Acceptable Subject to Narrowed Use Limits.	Acceptable from January 1, 2017, until January 1, 2022, in military applications and until January 1, 2025, in space- and aeronautics-related applications where reasonable efforts have been made to ascertain that other alternatives are not technically feasible due to performance or safety requirements. Closed cell foam products and products containing closed cell foams manufactured with these substitutes on or before January 1, 2022, for military applications or on and before January 1, 2025, in space- and aeronautics-related applications, may be used after those dates.	Users are required to document and retain the results of their technical investigation of alternatives for the purpose of demonstrating compliance. Information should include descriptions of: • Process or product in which the substitute is needed; • Substitutes examined and rejected; • Reason for rejection of other alternatives, e.g., performance, technical or safety standards; and/or • Anticipated date other substitutes will be available and projected time for switching.

UNACCEPTABLE SUBSTITUTES

End-use	Substitute	Decision	Further information
All Foam Blowing End-uses.	HCFC-141b and blends thereof.	Unacceptable effective September 18, 2015. Closed cell foam products and products containing closed cell foams manufactured with these substitutes on or before December 1, 2017 may be used after that date.	HCFC-141b has an ozone depletion potential of 0.11 under the Montreal Protocol. EPA previously found HCFC-141b unacceptable in all foam blowing end-uses (appendix M to subpart G of 40 CFR part 82). HCFC-141b has an ozone depletion potential (ODP) of 0.11.
All Foam Blowing end-uses.	HCFC-22, HCFC-142b, and blends thereof.	Unacceptable effective September 18, 2015. Closed cell foam products and products containing closed cell foams manufactured with these substitutes on or before December 1, 2017 may be used after that date.	Use or introduction into interstate commerce of virgin HCFC-22 and HCFC-142b for foam blowing is prohibited after January 1, 2010 under EPA's regulations at 40 CFR part 82 subpart A unless used, recovered, and recycled. These compounds have ODPs of 0.055 and 0.065, respectively.
Flexible Polyurethane.	HFC-134a, HFC-245fa, HFC-365mfc, and blends thereof.	Unacceptable as of January 1, 2017, except where allowed under a narrowed use limit.	These foam blowing agents have global warming potentials (GWPs) ranging from 725 to 1,430. Other substitutes will be available for this end-use with lower overall risk to human health and the environment by the status change date.
Polystyrene: Extruded Sheet.	HFC-134a, HFC-245fa, HFC-365mfc, and blends thereof; Formacel TI, and Formacel Z-6.	Unacceptable as of January 1, 2017, except where allowed under a narrowed use limit. Closed cell foam products and products containing closed cell foams manufactured with these substitutes on or before December 1, 2017 may be used after that date.	These foam blowing agents have GWPs ranging from higher than 370 to approximately 1,500. Other substitutes will be available for this end-use with lower overall risk to human health and the environment by the status change date.
Phenolic Insulation Board and Bunstock.	HFC-143a, HFC-134a, HFC-245fa, HFC-365mfc, and blends thereof.	Unacceptable as of January 1, 2017, except where allowed under a narrowed use limit. Closed cell foam products and products containing closed cell foams manufactured with these substitutes on or before December 1, 2017 may be used after that date.	These foam blowing agents have GWPs ranging from 725 to 4,470. Other substitutes will be available for this end-use with lower overall risk to human health and the environment by the status change date.

UNACCEPTABLE SUBSTITUTES—Continued

End-use	Substitute	Decision	Further information
Integral Skin Polyurethane.	HFC-134a, HFC-245fa, HFC-365mfc, and blends thereof; Formacel TI, and Formacel Z-6.	Unacceptable as of January 1, 2017, except where allowed under a narrowed use limit.	These foam blowing agents have GWPs ranging from higher than 370 to approximately 1,500. Other substitutes will be available for this end-use with lower overall risk to human health and the environment by the status change date.
Rigid Polyurethane: Slabstock and Other.	HFC-134a, HFC-245fa, HFC-365mfc and blends thereof; Formacel TI, and Formacel Z-6.	Unacceptable as of January 1, 2019, except where allowed under a narrowed use limit. Closed cell foam products and products containing closed cell foams manufactured with these substitutes on or before January 1, 2019, may be used after that date.	These foam blowing agents have GWPs ranging from higher than 370 to approximately 1,500. Other substitutes will be available for this end-use with lower overall risk to human health and the environment by the status change date.
Rigid Polyurethane and Polyisocyanurate Laminated Boardstock.	HFC-134a, HFC-245fa, HFC-365mfc and blends thereof.	Unacceptable as of January 1, 2017, except where allowed under a narrowed use limit. Closed cell foam products and products containing closed cell foams manufactured with these substitutes on or before December 1, 2017 may be used after that date.	These foam blowing agents have GWPs ranging from 725 to 1,430. Other substitutes will be available for this end-use with lower overall risk to human health and the environment by the status change date.
Rigid Polyurethane: Marine Flotation Foam.	HFC-134a, HFC-245fa, HFC-365mfc and blends thereof; Formacel TI, and Formacel Z-6.	Unacceptable as of January 1, 2020 except where allowed under a narrowed use limit. Closed cell foam products and products containing closed cell foams manufactured with these substitutes on or before January 1, 2020, may be used after that date.	These foam blowing agents have GWPs ranging from higher than 370 to approximately 1,500. Other substitutes will be available for this end-use with lower overall risk to human health and the environment by the status change date.
Rigid Polyurethane: Commercial Refrigeration and Sandwich Panels.	HFC-134a, HFC-245fa, HFC-365mfc, and blends thereof; Formacel TI, and Formacel Z-6.	Unacceptable as of January 1, 2020 except where allowed under a narrowed use limit. Closed cell foam products and products containing closed cell foams manufactured with these substitutes on or before January 1, 2020, may be used after that date.	These foam blowing agents have GWPs ranging from higher than 370 to approximately 1,500. Other substitutes will be available for this end-use with lower overall risk to human health and the environment by the status change date.

UNACCEPTABLE SUBSTITUTES—Continued

End-use	Substitute	Decision	Further information
Rigid Polyurethane: Appliance.	HFC-134a, HFC-245fa, HFC-365mfc and blends thereof; Formacel TI, and Formacel Z-6.	Unacceptable as of January 1, 2020, except where allowed under a narrowed use limit. Closed cell foam products and products containing closed cell foams manufactured with these substitutes on or before January 1, 2020, may be used after that date.	These foam blowing agents have GWPs ranging from higher than 370 to approximately 1,500. Other substitutes will be available for this end-use with lower overall risk to human health and the environment by the status change date.
Polystyrene: Extruded Boardstock and Billet.	HFC-134a, HFC-245fa, HFC-365mfc, and blends thereof; Formacel TI, Formacel B, and Formacel Z-6.	Unacceptable as of January 1, 2021, except where allowed under a narrowed use limit. Closed cell foam products and products containing closed cell foams manufactured with these substitutes on or before January 1, 2021, may be used after that date.	These foam blowing agents have GWPs ranging from higher than 140 to approximately 1,500. Other substitutes will be available for this end-use with lower overall risk to human health and the environment by the status change date.
Polyolefin	HFC-134a, HFC-245fa, HFC-365mfc, and blends thereof; Formacel TI, and Formacel Z-6.	Unacceptable as of January 1, 2020, except where allowed under a narrowed use limit. Closed cell foam products and products containing closed cell foams manufactured with these substitutes on or before January 1, 2020, may be used after that date.	These foam blowing agents have GWPs ranging from higher than 370 to approximately 1,500. Other substitutes will be available for this end-use with lower overall risk to human health and the environment by the status change date.

FIRE SUPPRESSION AND EXPLOSION PROTECTION AGENTS—UNACCEPTABLE SUBSTITUTES

End-use	Substitute	Decision	Further information
Total Flooding	HCFC–22	Unacceptable effective September 18, 2015.	Use or introduction into interstate commerce of virgin HCFC–22 for total flooding fire suppression and explosion protection is prohibited as of January 1, 2010 under EPA's regulations at 40 CFR part 82 subpart A. This chemical has an ozone depletion potential of 0.055.

STERILANTS—UNACCEPTABLE SUBSTITUTES

End-use	Substitute	Decision	Further information
Sterilants	Blends containing HCFC–22.	Unacceptable effective September 18, 2015.	Use or introduction into interstate commerce of virgin HCFC–22 for sterilants is prohibited as of January 1, 2010 under EPA's regulations at 40 CFR part 82 subpart A. This chemical has an ozone depletion potential of 0.055.

ADHESIVES, COATINGS AND INKS—UNACCEPTABLE SUBSTITUTES

End-use	Substitute	Decision	Further information
Adhesives, coatings and inks.	HCFC–141b and blends thereof.	Unacceptable effective September 18, 2015.	Use or introduction into interstate commerce of virgin HCFC–141b for adhesives, coatings and inks is prohibited as of January 1, 2015 under EPA's regulations at 40 CFR part 82 subpart A. This chemical has an ozone depletion potential of 0.11.

[80 FR 42953, July 20, 2015, as amended at 81 FR 86885, Dec. 1, 2016]

APPENDIX V TO SUBPART G OF PART 82—SUBSTITUTES SUBJECT TO USE RESTRICTIONS AND UNACCEPTABLE SUBSTITUTES LISTED IN THE DECEMBER 1, 2016 FINAL RULE

REFRIGERANTS—ACCEPTABLE SUBJECT TO USE CONDITIONS

End-use	Substitute	Decision	Use conditions	Further information
Commercial ice machines (self-contained) (new only).	Propane (R-290)	Acceptable, subject to use conditions.	As of January 3, 2017: This refrigerant may be used only in new equipment designed specifically and clearly identified for the refrigerant—*i.e.*, this refrigerant may not be used as a conversion or ''retrofit'' refrigerant for existing equipment. This refrigerant may be used only in self-contained commercial ice machines that meet all requirements listed in Supplement SA to UL 563.[125] In cases where this rule includes requirements more stringent than those in UL 563, the equipment must meet the requirements of the final rule in place of the requirements in the UL Standard. The charge size must not exceed 150g (5.29 oz) in each refrigerant circuit of a commercial ice machine. As provided in clauses SA6.1.1 and SA6.1.2 of UL 563, the following markings must be attached at the locations provided and must be permanent: (a) ''DANGER—Risk of Fire or Explosion. Flammable Refrigerant Used. Do Not Use Mechanical Devices To Defrost Refrigerator. Do Not Puncture Refrigerant Tubing.'' This marking must be provided on or near any evaporators that can be contacted by the consumer. (b) ''DANGER—Risk of Fire or Explosion. Flammable Refrigerant Used. To Be Repaired Only By Trained Service Personnel. Do Not Puncture Refrigerant Tubing.'' This marking must be located near the machine compartment. (c) ''CAUTION—Risk of Fire or Explosion. Flammable Refrigerant Used. Consult Repair Manual/Owner's Guide Before Attempting To Service This Product. All Safety Precautions Must be Followed.'' This marking must be located near the machine compartment. (d) ''CAUTION—Risk of Fire or Explosion. Dispose of Properly In Accordance With Federal Or Local Regulations. Flammable Refrigerant Used.'' This marking must be provided on the exterior of the refrigeration equipment.	Applicable OSHA requirements at 29 CFR part 1910 must be followed, including those at 29 CFR 1910.106 (flammable and combustible liquids), 1910.110 (storage and handling of liquefied petroleum gases), 1910.157 (portable fire extinguishers), and 1910.1000 (toxic and hazardous substances). Proper ventilation should be maintained at all times during the manufacture and storage of equipment containing hydrocarbon refrigerants through adherence to good manufacturing practices as per 29 CFR 1910.106. If refrigerant levels in the air surrounding the equipment rise above one-fourth of the lower flammability limit, the space should be evacuated and re-entry should occur only after the space has been properly ventilated. Technicians and equipment manufacturers should wear appropriate personal protective equipment, including chemical goggles and protective gloves, when handling propane. Special care should be taken to avoid contact with

(e) "CAUTION—Risk of Fire or Explosion Due To Puncture Of Refrigerant Tubing; Follow Handling Instructions Carefully. Flammable Refrigerant Used." This marking must be provided near all exposed refrigerant tubing.	the skin since propane, like many refrigerants, can cause freeze burns on the skin..	
	All of these markings must be in letters no less than 6.4 mm (¼ inch) high. The equipment must have red Pantone Matching System	A Class B dry powder type fire extinguisher should be kept nearby.

REFRIGERANTS—ACCEPTABLE SUBJECT TO USE CONDITIONS—Continued

End-use	Substitute	Decision	Use conditions	Further information
			(PMS) #185 marked pipes, hoses, or other devices through which the refrigerant passes, to indicate the use of a flammable refrigerant. This color must be applied at all service ports and other parts of the system where service puncturing or other actions creating an opening from the refrigerant circuit to the atmosphere might be expected and must extend a minimum of one (1) inch in both directions from such locations.	Technicians should only use spark-proof tools when working on equipment with propane. Any recovery equipment used should be designed for flammable refrigerants. Any refrigerant releases should be in a well-ventilated area, such as outside of a building. Only technicians specifically trained in handling flammable refrigerants should service equipment containing propane. Technicians should gain an understanding of minimizing the risk of fire and the steps to use flammable refrigerants safely. Room occupants should evacuate the space immediately following the accidental release of this refrigerant. If a service port is added then, commercial ice machines or equipment using propane should have service aperture fittings that differ from fittings used in equipment or containers using non-flammable refrigerant. ''Differ'' means that either the diameter differs by at least 1/16 inch or the thread direction is reversed (*i.e.*, right-handed vs. left-handed).

				These different fittings should be permanently affixed to the unit at the point of service and maintained until the end-of-life of the unit, and should not be accessed with an adaptor.
Very low temperature refrigeration equipment (new only).	Propane (R-290)	Acceptable, subject to use conditions.	As of January 3, 2017: This refrigerant may be used only in new equipment designed specifically and clearly identified for the refrigerant—*i.e.*, this refrigerant may not be used as a conversion or ''retrofit'' refrigerant for existing equipment. This refrigerant may be used only in self-contained commercial ice machines that meet all requirements listed in Supplement SA to UL 563.[125] In cases where this rule includes requirements more stringent than those in UL 563, the equipment must meet the requirements of the final rule in place of the requirements in the UL Standard. The charge size for the equipment must not exceed 150 grams (5.29 ounces) in each refrigerant circuit of the very low temperature refrigeration equipment. As provided in clauses SA6.1.1 and SA6.1.2 of UL 563, the following markings must be attached at the locations provided and must be permanent: (a) ''DANGER—Risk of Fire or Explosion. Flammable Refrigerant Used. Do Not Use Mechanical Devices To Defrost Refrigerator. Do Not Puncture Refrigerant Tubing.'' This marking must be provided on or near any evaporators that can be contacted by the consumer. (b) ''DANGER—Risk of Fire or Explosion. Flammable Refrigerant Used. To Be Repaired Only By Trained Service Personnel. Do Not Puncture Refrigerant Tubing.'' This marking must be located near the machine compartment. (c) ''CAUTION—Risk of Fire or Explosion. Flammable Refrigerant Used. Consult Repair Manual/Owner's Guide Before Attempting To Service This Product. All Safety Precautions Must be Followed.'' This marking must be located near the machine compartment.	Applicable OSHA requirements at 29 CFR part 1910 must be followed, including those at 29 CFR 1910.106 (flammable and combustible liquids), 1910.110 (storage and handling of liquefied petroleum gases), 1910.157 (portable fire extinguishers), and 1910.1000 (toxic and hazardous substances). Proper ventilation should be maintained at all times during the manufacture and storage of equipment containing hydrocarbon refrigerants through adherence to good manufacturing practices as per 29 CFR 1910.106. If refrigerant levels in the air surrounding the equipment rise above one-fourth of the lower flammability limit, the space should be evacuated and re-entry should occur only after the space has been properly ventilated. Technicians and equipment manufacturers should wear appropriate personal protective equipment, including chemical goggles and protec-

REFRIGERANTS—ACCEPTABLE SUBJECT TO USE CONDITIONS—Continued

End-use	Substitute	Decision	Use conditions	Further information
			(d) "CAUTION—Risk of Fire or Explosion. Dispose of Properly In Accordance With Federal Or Local Regulations. Flammable Refrigerant Used." This marking must be provided on the exterior of the refrigeration equipment. (e) "CAUTION—Risk of Fire or Explosion Due To Puncture Of Refrigerant Tubing; Follow Handling Instructions Carefully. Flammable Refrigerant Used." This marking must be provided near all exposed refrigerant tubing. All of these markings must be in letters no less than 6.4 mm (¼ inch) high. The equipment must have red Pantone Matching System (PMS) #185 marked pipes, hoses, or other devices through which the refrigerant passes, to indicate the use of a flammable refrigerant. This color must be applied at all service ports and other parts of the system where service puncturing or other actions creating an opening from the refrigerant circuit to the atmosphere might be expected and must extend a minimum of one (1) inch in both directions from such locations.	tive gloves, when handling propane. Special care should be taken to avoid contact with the skin since propane, like many refrigerants, can cause freeze burns on the skin. A Class B dry powder type fire extinguisher should be kept nearby. Technicians should only use spark-proof tools when working on equipment with propane. Any recovery equipment used should be designed for flammable refrigerants. Any refrigerant releases should be in a well-ventilated area, such as outside of a building. Only technicians specifically trained in handling flammable refrigerants should service equipment containing propane. Technicians should gain an understanding of minimizing the risk of fire and the steps to use flammable refrigerants safely. Room occupants should evacuate the space immediately following the accidental release of this refrigerant.

				If a service port is added then, commercial ice machines or equipment using propane should have service aperture fittings that differ from fittings used in equipment or containers using non-flammable refrigerant. ''Differ'' means that either the diameter differs by at least 1/16 inch or the thread direction is reversed (*i.e.*, right-handed vs. left-handed). These different fittings should be permanently affixed to the unit at the point of service and maintained until the end-of-life of the unit, and should not be accessed with an adaptor.
Water coolers (new only).	Propane (R-290)	Acceptable, subject to use conditions.	As of January 3, 2017: This refrigerant may be used only in new equipment designed specifically and clearly identified for the refrigerant—*i.e.*, this refrigerant may not be used as a conversion or ''retrofit'' refrigerant for existing equipment. This refrigerant may be used only in water coolers that meet all requirements listed in Supplement SB to UL 399[1 2 3] In cases where the rule includes requirements more stringent than those of the UL 399, the appliance must meet the requirements of the final rule in place of the requirements in the UL Standard.	Applicable OSHA requirements at 29 CFR part 1910 must be followed, including those at 29 CFR 1910.94 (ventilation) and 1910.106 (flammable and combustible liquids), 1910.110 (storage and handling of liquefied petroleum gases), 1910.157 (portable fire extinguishers), and 1910.1000 (toxic and hazardous substances).

REFRIGERANTS—ACCEPTABLE SUBJECT TO USE CONDITIONS—Continued

End-use	Substitute	Decision	Use conditions	Further information
			The charge size must not exceed 60 grams (2.12 ounces) per refrigerant circuit in the water cooler. The equipment must have red PMS #185 marked pipes, hoses, or other devices through which the refrigerant passes, to indicate the use of a flammable refrigerant. This color must be applied at all service ports and other parts of the system where service puncturing or other actions creating an opening from the refrigerant circuit to the atmosphere might be expected and must extend a minimum of one (1) inch in both directions from such locations. As provided in clauses SB6.1.2 to SB6.1.5 of UL 399, the following markings must be attached at the locations provided and must be permanent:. (a) "DANGER—Risk of Fire or Explosion. Flammable Refrigerant Used. Do Not Use Mechanical Devices To Defrost Refrigerator. Do Not Puncture Refrigerant Tubing." This. marking must be provided on or near any evaporators that can be contacted by the consumer. (b) "DANGER—Risk of Fire or Explosion. Flammable Refrigerant Used. To Be Repaired Only By Trained Service Personnel. Do Not Puncture Refrigerant Tubing." This marking must be located near the machine compartment. (c) "CAUTION—Risk of Fire or Explosion. Flammable Refrigerant Used. Consult Repair Manual/Owner's Guide Before Attempting To Service This Product. All Safety Precautions Must Be Followed." This marking must be located near the machine compartment. (d) "CAUTION—Risk of Fire or Explosion. Dispose of Properly In Accordance With Federal Or Local Regulations. Flammable Refrigerant Used." This marking must be provided on the exterior of the refrigeration equipment.	Proper ventilation should be maintained at all times during the manufacture and storage of equipment containing hydrocarbon refrigerants through adherence to good manufacturing practices as per 29 CFR 1910.106. If refrigerant levels in the air surrounding the equipment rise above one-fourth of the lower flammability limit, the space should be evacuated and re-entry should occur only after the space has been properly ventilated. Technicians and equipment manufacturers should wear appropriate personal protective equipment, including chemical goggles and protective gloves, when handling propane. Special care should be taken to avoid contact with the skin since propane, like many refrigerants, can cause freeze burns on the skin. A Class B dry powder type fire extinguisher should be kept nearby. Technicians should only use spark-proof tools when working on equipment with flammable refrigerants. Any recovery equipment used should be designed for flam-

			mable refrigerants. Any refrigerant releases should be in a well-ventilated area, such as outside of a building. Only technicians specifically trained in handling flammable refrigerants should service equipment containing propane. Technicians should gain an understanding of minimizing the risk of fire and the steps to use flammable refrigerants safely. Room occupants should evacuate the space immediately following the accidental release of this refrigerant. If a service port is added, then water coolers or equipment using propane should have service aperture fittings that differ from fittings used in equipment or containers using non-flammable refrigerant.
		(e) "CAUTION—Risk of Fire or Explosion Due To Puncture Of Refrigerant Tubing; Follow Handling Instructions Carefully. Flammable Refrigerant Used." This marking must be provided near all exposed refrigerant tubing.	

REFRIGERANTS—ACCEPTABLE SUBJECT TO USE CONDITIONS—Continued

End-use	Substitute	Decision	Use conditions	Further information
				"Differ" means that either the diameter differs by at least 1/16 inch or the thread direction is reversed (*i.e.*, right-handed vs. left-handed). These different fittings should be permanently affixed to the unit at the point of service and maintained until the end-of-life of the unit, and should not be accessed with an adaptor.

[1] The Director of the Federal Register approves this incorporation by reference (5 U.S.C. 552(a) and 1 CFR part 51). You may inspect a copy at U.S. EPA's Air and Radiation Docket; EPA West Building, Room 3334, 1301 Constitution Ave. NW., Washington, DC or at the National Archives and Records Administration (NARA). For questions regarding access to these standards, the telephone number of EPA's Air and Radiation Docket is 202–566–1742. For information on the availability of this material at NARA, call 202–741–6030, or go to: *http://www.archives.gov/federal_register/code_of_federal_regulations/ibr_locations.html.*

[2] You may obtain the material from: Underwriters Laboratories Inc. (UL) COMM 2000; 151 Eastern Avenue, Bensenville, IL 60106; *orders@comm-2000.com*; 1–888–853–3503 in the U.S. or Canada (other countries dial +1–415–352–2168); *http://ulstandards.ul.com/* or *www.comm-2000.com.*

[3] UL 399, Standard for Safety: DrinkingWater Coolers.—Supplement SB: Requirements for Drinking Water Coolers Employing a Flammable Refrigerant in the Refrigerating System, 7th edition, Dated August 22, 2008, including revisions through October 17, 2013.

[4] UL 471, Standard for Safety: Commercial Refrigerators and Freezers—Supplement SB: Requirements for Refrigerators and Freezers Employing a Flammable Refrigerant in the Refrigerating System, 10th edition, Dated November 24, 2010.

[5] UL 563, Standard for Safety: Ice Makers.—Supplement SA: Requirements for Ice Makers Employing a Flammable Refrigerant in the Refrigerating System, 8th edition, Dated July 31, 2009, including revisions through November 29, 2013.

REFRIGERANTS—SUBSTITUTES ACCEPTABLE SUBJECT TO NARROWED USE LIMITS

End-use	Substitutes	Decision	Narrowed use limits	Further information
Centrifugal chillers (new only).	HFC-134a	Acceptable subject to narrowed use limits.	Acceptable after January 1, 2024, only in military marine vessels where reasonable efforts have been made to ascertain that other alternatives are not technically feasible due to performance or safety requirements.	Users are required to document and retain the results of their technical investigation of alternatives for the purpose of demonstrating compliance. Information should include descriptions of: • Application in which the substitute is needed; • Substitutes examined and rejected; • Reason for rejection of other alternatives, e.g., performance, technical or safety standards; and/or • Anticipated date other substitutes will be available and qualified and projected time for switching.

Centrifugal chillers (new only).	HFC-134a and R-404A.	Acceptable subject to narrowed use limits.	Acceptable after January 1, 2024, only in human-rated spacecraft and related support equipment where reasonable efforts have been made to ascertain that other alternatives are not technically feasible due to performance or safety requirements.	Users are required to document and retain the results of their technical investigation of alternatives for the purpose of demonstrating compliance. Information should include descriptions of: • Application in which the substitute is needed; • Substitutes examined and rejected; • Reason for rejection of other alternatives, e.g., performance, technical or safety standards; and/or • Anticipated date other substitutes will be available and qualified and projected time for switching.
Positive displacement chillers (new only).	HFC-134a	Acceptable subject to narrowed use limits.	Acceptable after January 1, 2024, only in military marine vessels where reasonable efforts have been made to ascertain that other alternatives are not technically feasible due to performance or safety requirements.	Users are required to document and retain the results of their technical investigation of alternatives for the purpose of demonstrating compliance. Information should include descriptions of: • Application in which the substitute is needed; • Substitutes examined and rejected; • Reason for rejection of other alternatives, e.g., performance, technical or safety standards; and/or • Anticipated date other substitutes will be available and qualified and projected time for switching.

REFRIGERANTS—SUBSTITUTES ACCEPTABLE SUBJECT TO NARROWED USE LIMITS—Continued

End-use	Substitutes	Decision	Narrowed use limits	Further information
Positive displacement chillers (new only).	HFC-134a and R-404A.	Acceptable subject to narrowed use limits.	Acceptable after January 1, 2024, only in human-rated spacecraft and related support equipment where reasonable efforts have been made to ascertain that other alternatives are not technically feasible due to performance or safety requirements.	Users are required to document and retain the results of their technical investigation of alternatives for the purpose of demonstrating compliance. Information should include descriptions of: • Application in which the substitute is needed; • Substitutes examined and rejected; • Reason for rejection of other alternatives, e.g., performance, technical or safety standards; and/or • Anticipated date other substitutes will be available and qualified and projected time for switching.

REFRIGERANTS—UNACCEPTABLE SUBSTITUTES

End-use	Substitutes	Decision	Further information
Centrifugal chillers (new only).	FOR12A, FOR12B, HFC-134a, HFC-227ea, HFC-236fa, HFC-245fa, R-125/134a/600a (28.1/70/1.9), R-125/290/134a/600a (55.0/1.0/42.5/1.5), R-404A, R-407C, R-410A, R-410B, R-417A, R-421A, R-422B, R-422C, R-422D, R-423A, R-424A, R-434A, R-438A, R-507A, RS-44 (2003 composition), and THR-03.	Unacceptable as of January 1, 2024 except where allowed under a narrowed use limit.	These refrigerants have GWPs ranging from approximately 900 to 9,810. Other alternatives will be available for this end-use with lower overall risk to human health and the environment by the status change date.
Centrifugal chillers (new only).	Propylene (R-1270) and R-443A.	Unacceptable as of January 3, 2017.	These refrigerants are highly photochemically reactive in the lower atmosphere and may deteriorate local air quality (that is, may increase ground level ozone). Other alternatives are available for this end-use with lower overall risk to human health and the environment.
Cold storage warehouses (new only).	HFC-227ea, R-125/290/134a/600a (55.0/1.0/42.5/1.5), R-404A, R-407A, R-407B, R-410A, R-410B, R-417A, R-421A, R-421B, R-422A, R-422B, R-422C, R-422D, R-423A, R-424A, R-428A, R-434A, R-438A, R-507A, and RS-44 (2003 composition).	Unacceptable as of January 1, 2023.	These refrigerants have GWPs ranging from approximately 2,090 to 3,990. Other alternatives will be available for this end-use with lower overall risk to human health and the environment by the status change date.
Cold storage warehouses (new only).	Propylene (R-1270) and R-443A.	Unacceptable as of January 3, 2017.	These refrigerants are highly photochemically reactive in the lower atmosphere and may deteriorate local air quality (that is, may increase ground level ozone). Other alternatives are available for this end-use with lower overall risk to human health and the environment.

REFRIGERANTS—UNACCEPTABLE SUBSTITUTES—Continued

End-use	Substitutes	Decision	Further information
Household refrigerators and freezers (new only).	FOR12A, FOR12B, HFC-134a, KDD6, R-125/290/134a/600a (55.0/1.0/42.5/1.5), R-404A, R-407C, R-407F, R-410A, R-410B, R-417A, R-421A, R-421B, R-422A, R-422B, R-422C, R-422D, R-424A, R-426A, R-428A, R-434A, R-437A, R-438A, R-507A, RS-24 (2002 formulation), RS-44 (2003 formulation), SP34E, and THR-03.	Unacceptable as of January 1, 2021.	These refrigerants have GWPs ranging from approximately 900 to 3,985. Other alternatives will be available for this end-use with lower overall risk to human health and the environment by the status change date.
Positive displacement chillers (new only).	FOR12A, FOR12B, HFC-134a, HFC-227ea, KDD6, R-125/134a/600a (28.1/70/1.9), R-125/290/134a/600a (55.0/1.0/42.5/1.5), R-404A, R-407C, R-410A, R-410B, R-417A, R-421A, R-422B, R-422C, R-422D, R-424A, R-434A, R-437A, R-438A, R-507A, RS-44 (2003 composition), SP34E, and THR-03.	Unacceptable as of January 1, 2024 except where allowed under a narrowed use limit.	These refrigerants have GWPs ranging from approximately 900 to 3,985. Other alternatives will be available for this end-use with lower overall risk to human health and the environment by the status change date.
Positive displacement chillers (new only).	Propylene (R-1270) and R-443A.	Unacceptable as of January 3, 2017.	These refrigerants are highly photochemically reactive in the lower atmosphere and may deteriorate local air quality (that is, may increase ground level ozone). Other alternatives are available for this end-use with lower overall risk to human health and the environment.
Residential and light commercial air conditioning and heat pumps (new only).	Propylene (R-1270) and R-443A.	Unacceptable as of January 3, 2017.	These refrigerants are highly photochemically reactive in the lower atmosphere and may deteriorate local air quality (that is, may increase ground level ozone). Other alternatives are available for this end-use with lower overall risk to human health and the environment.

REFRIGERANTS—UNACCEPTABLE SUBSTITUTES—Continued

End-use	Substitutes	Decision	Further information
Residential and light commercial air conditioning—unitary split AC systems and heat pumps (retrofit only).	All refrigerants identified as flammability Class 3 in ANSI/ASHRAE Standard 34–2013[1 2 3]. All refrigerants meeting the criteria for flammability Class 3 in ANSI/ASHRAE Standard 34–2013. This includes, but is not limited to, refrigerant products sold under the names R-22a, 22a, Blue Sky 22a refrigerant, Coolant Express 22a, DURACOOL-22a, EC-22, Ecofreeez EF-22a, Envirosafe 22a, ES-22a, Frost 22a, HC-22a, Maxi-Fridge, MX-22a, Oz-Chill 22a, Priority Cool, and RED TEK 22a.	Unacceptable as of January 3, 2017.	These refrigerants are highly flammable and present a flammability risk when used in equipment designed for nonflammable refrigerants. Other alternatives are available for this end-use with lower overall risk to human health and the environment.
Retail food refrigeration (refrigerated food processing and dispensing equipment) (new only).	HFC-227ea, KDD6, R-125/290/134a/600a (55.0/1.0/42.5/1.5), R-404A, R-407A, R-407B, R-407C, R-407F, R-410A, R-410B, R-417A, R-421A, R-421B, R-422A, R-422B, R-422C, R-422D, R-424A, R-428A, R-434A, R-437A, R-438A, R-507A, RS-44 (2003 formulation).	Unacceptable as of January 1, 2021.	These refrigerants have GWPs ranging from approximately 1,770 to 3,990. Other alternatives will be available for this end-use with lower overall risk to human health and the environment by the status change date.

[1] The Director of the Federal Register approves this incorporation by reference (5 U.S.C. 552(a) and 1 CFR part 51). You may inspect a copy at U.S. EPA's Air and Radiation Docket; EPA West Building, Room 3334, 1301 Constitution Ave. NW., Washington, DC or at the National Archives and Records Administration (NARA). For questions regarding access to this standard, the telephone number of EPA's Air and Radiation Docket is 202–566–1742. For information on the availability of this material at NARA, call 202–741–6030, or go to: *http://www.archives.gov/federal_register/code_of_federal_regulations/ibr_locations.html*.

[2] You may obtain this material from: American Society of Heating, Refrigerating and Air-Conditioning Engineers (ASHRAE) 6300 Interfirst Drive, Ann Arbor, MI 48108; 1–800–527–4723 in the U.S. or Canada; *http://www.techstreet.com/ashrae/ashrae_standards.html?ashrae_auth_token=*.

[3] ANSI/ASHRAE Standard 34–2013, Designation and Safety Classification of Refrigerants, 2013.

FOAM BLOWING AGENTS—SUBSTITUTES ACCEPTABLE SUBJECT TO NARROWED USE LIMITS

End-use	Substitutes	Decision	Narrowed use limits	Further information
Rigid PU: Spray foam—high-pressure two-component.	HFC-134a, HFC-245fa, and blends thereof; blends of HFC-365mfc with at least four percent HFC-245fa, and commercial blends of HFC-365mfc with seven to 13 percent HFC-227ea and the remainder HFC-365mfc; and Formacel TI.	Acceptable subject to narrowed use limits.	Acceptable from January 1, 2020, until January 1, 2025, only in military or space- and aeronautics-related applications where reasonable efforts have been made to ascertain that other alternatives are not technically feasible due to performance or safety requirements. Closed cell foam products and products containing closed cell foams manufactured with these substitutes on or before January 1, 2025, may be used after that date.	Users are required to document and retain the results of their technical investigation of alternatives for the purpose of demonstrating compliance. Information should include descriptions of: • Process or product in which the substitute is needed; • Substitutes examined and rejected; • Reason for rejection of other alternatives, e.g., performance, technical or safety standards; and/or • Anticipated date other substitutes will be available and projected time for switching.
Rigid PU: Spray foam—low-pressure two-component.	HFC-134a, HFC-245fa, and blends thereof; blends of HFC-365mfc with at least four percent HFC-245fa, and commercial blends of HFC-365mfc with seven to 13 percent HFC-227ea and the remainder HFC-365mfc; and Formacel TI.	Acceptable subject to narrowed use limits.	Acceptable from January 1, 2021, until January 1, 2025, only in military or space- and aeronautics-related applications where reasonable efforts have been made to ascertain that other alternatives are not technically feasible due to performance or safety requirements. Low pressure two-component spray foam kits manufactured with these substitutes on or before January 1, 2025, for military or space- and aeronautics-related applications may be used after that date.	Users are required to document and retain the results of their technical investigation of alternatives for the purpose of demonstrating compliance. Information should include descriptions of: • Process or product in which the substitute is needed; • Substitutes examined and rejected; • Reason for rejection of other alternatives, e.g., performance, technical or safety standards; and/or • Anticipated date other substitutes will be available and projected time for switching.

FOAM BLOWING AGENTS—UNACCEPTABLE SUBSTITUTES

End-use	Substitutes	Decision	Further information
Flexible PU	Methylene chloride	Unacceptable as of January 3, 2017.	Methylene chloride is a carcinogen and may present a toxicity risk. Other alternatives are available for this end-use with lower overall risk to human health and the environment.
Rigid PU: Spray foam—one component foam sealants.	HFC-134a, HFC-245fa, and blends thereof; blends of HFC-365mfc with at least four percent HFC-245fa, and commercial blends of HFC-365mfc with seven to 13 percent HFC-227ea and the remainder HFC-365mfc; and Formacel TI.	Unacceptable as of January 1, 2020. One-component foam sealant cans manufactured with these substitutes on or before January 1, 2020, may be used after that date.	These foam blowing agents have GWPs ranging from higher than 730 to approximately 1,500. Other alternatives will be available for this end-use with lower overall risk to human health and the environment by the status change date.
Rigid PU: Spray foam—high-pressure two-component.	HFC-134a, HFC-245fa, and blends thereof; blends of HFC-365mfc with at least four percent HFC-245fa, and commercial blends of HFC-365mfc with seven to 13 percent HFC-227ea and the remainder HFC-365mfc; and Formacel TI.	Unacceptable as of January 1, 2020, except where allowed under a narrowed use limit. Closed cell foam products and products containing closed cell foams manufactured with these substitutes on or before January 1, 2020, may be used after that date.	These foam blowing agents have GWPs ranging from higher than 730 to approximately 1,500. Other alternatives will be available for this end-use with lower overall risk to human health and the environment by the status change date.
Rigid PU: Spray foam—low-pressure two-component.	HFC-134a, HFC-245fa, and blends thereof; blends of HFC-365mfc with at least four percent HFC-245fa, and commercial blends of HFC-365mfc with seven to 13 percent HFC-227ea and the remainder HFC-365mfc; and Formacel TI.	Unacceptable as of January 1, 2021, except where allowed under a narrowed use limit. Low pressure two-component spray foam kits manufactured with these substitutes on or before January 1, 2025, may be used after that date.	These foam blowing agents have GWPs ranging from higher than 730 to approximately 1,500. Other alternatives will be available for this end-use with lower overall risk to human health and the environment by the status change date.

FIRE SUPPRESSION AND EXPLOSION PROTECTION AGENTS—ACCEPTABLE SUBJECT TO USE CONDITIONS

End-use	Substitute	Decision	Use conditions	Further information
Streaming.	2-BTP	Acceptable, subject to use conditions.	As of January 3, 2017, acceptable only for use in handheld extinguishers in aircraft.	This fire suppressant has a relatively low GWP of 0.23–0.26 and a short atmospheric lifetime of approximately seven days. This agent is subject to requirements contained in a Toxic Substance Control Act (TSCA) section 5(e) Consent Order and any subsequent TSCA section 5(a)(2) Significant New Use Rule (SNUR). For establishments manufacturing, installing and maintaining handheld extinguishers using this agent: (1) Use of this agent should be used in accordance with the latest edition of NFPA Standard 10 for Portable Fire Extinguishers; (2) In the case that 2-BTP is inhaled, person(s) should be immediately removed and exposed to fresh air; if breathing is difficult, person(s) should seek medical attention; (3) Eye wash and quick drench facilities should be available. In case of ocular exposure, person(s) should immediately flush the eyes, including under the eyelids, with fresh water and move to a non-contaminated area; (4) Exposed person(s) should remove all contaminated clothing and footwear to avoid irritation, and medical attention should be sought if irritation develops or persists; (5) Although unlikely, in case of ingestion of 2-BTP, the person(s) should consult a physician immediately; (6) Manufacturing space should be equipped with specialized engineering controls and well ventilated with a local exhaust system and low-lying source ventilation to effectively mitigate potential occupational exposure; regular testing and monitoring of the workplace atmosphere should be conducted; (7) Employees responsible for chemical processing should wear the appropriate PPE, such as protective gloves, tightly sealed goggles, protective work clothing, and suitable respiratory protection in case of accidental release or insufficient ventilation; (8) All spills should be cleaned up immediately in accordance with good industrial hygiene practices; and (9) Training for safe handling procedures should be provided to all employees that would be likely to handle containers of the agent or extinguishing units filled with the agent.

FIRE SUPPRESSION AND EXPLOSION PROTECTION AGENTS—ACCEPTABLE SUBJECT TO USE CONDITIONS—Continued

End-use	Substitute	Decision	Use conditions	Further information
Total flooding.	2-BTP	Acceptable, subject to use conditions.	As of January 3, 2017, acceptable only for use in engine nacelles and auxiliary power units on aircraft.	This fire suppressant has a relatively low GWP of 0.23–0.26 and a short atmospheric lifetime of approximately seven days. This agent is subject to requirements contained in a TSCA section 5(e) Consent Order and any subsequent TSCA section 5(a)(2) SNUR. For establishments manufacturing, installing, and servicing engine nacelles and auxiliary power units on aircraft using this agent: (1) This agent should be used in accordance with the safety guidelines in the latest edition of the National Fire Protection Association (NFPA) 2001 Standard for Clean Agent Fire Extinguishing Systems; (2) In the case that 2-BTP is inhaled, person(s) should be immediately removed and exposed to fresh air; if breathing is difficult, person(s) should seek medical attention; (3) Eye wash and quick drench facilities should be available. In case of ocular exposure, person(s) should immediately flush the eyes, including under the eyelids, with fresh water and move to a non-contaminated area. (4) Exposed person(s) should remove all contaminated clothing and footwear to avoid irritation, and medical attention should be sought if irritation develops or persists; (5) Although unlikely, in case of ingestion of 2-BTP, the person(s) should consult a physician immediately; (6) Manufacturing space should be equipped with specialized engineering controls and well ventilated with a local exhaust system and low-lying source ventilation to effectively mitigate potential occupational exposure; regular testing and monitoring of the workplace atmosphere should be conducted; (7) Employees responsible for chemical processing should wear the appropriate PPE, such as protective gloves, tightly sealed goggles, protective work clothing, and suitable respiratory protection in case of accidental release or insufficient ventilation; (8) All spills should be cleaned up immediately in accordance with good industrial hygiene practices; (9) Training for safe handling procedures should be provided to all employees that would be likely to handle containers of the agent or extinguishing units filled with the agent; (10) Safety features that are typical of total flooding systems such as pre-discharge alarms, time delays, and system abort switches should be provided, as directed by applicable OSHA regulations and NFPA standards; use of this agent should also conform to relevant OSHA requirements, including 29 CFR 1910, subpart L, sections 1910.160 and 1910.162.

[81 FR 86889, Dec. 1, 2016]

Subpart H—Halon Emissions Reduction

SOURCE: 63 FR 11096, Mar. 5, 1998, unless otherwise noted.

§ 82.250 Purpose and scope.

(a) The purpose of this subpart is to reduce the emissions of halon in accordance with section 608 of the Clean Air Act by banning the manufacture of halon blends; banning the intentional release of halons during repair, testing, and disposal of equipment containing halons and during technician training; requiring organizations that employ technicians to provide emissions reduction training; and requiring proper disposal of halons and equipment containing halons.

(b) This subpart applies to any person testing, servicing, maintaining, repairing or disposing of equipment that contains halons or using such equipment during technician training. This subpart also applies to any person disposing of halons; to manufacturers of halon blends; and to organizations that employ technicians who service halon-containing equipment.

§ 82.260 Definitions.

Halon-containing equipment means equipment used to store, transfer, and/or disperse halon.

Disposal of halon means the process leading to and including discarding of halon from halon-containing equipment.

Disposal of halon-containing equipment means the process leading to and including:

(1) The discharge, deposit, dumping or placing of any discarded halon-containing equipment into or on any land or water;

(2) The disassembly of any halon-containing equipment for discharge, deposit, or dumping or placing of its discarded component parts into or on any land or water; or

(3) The disassembly of any halon-containing equipment for reuse of its component parts.

Halon means any of the Class I, Group II substances listed in subpart A, appendix A of 40 CFR part 82. This group consists of the three halogenated hydrocarbons known as Halon 1211, Halon 1301, and Halon 2402, and all isomers of these chemicals.

Halon product means any mixture or combination of substances that contains only one halon (e.g., Halon 1301 plus dinitrogen gas (N_2))

Halon blend means any mixture or combination of substances that contains two or more halons.

Manufacturer means any person engaged in the direct manufacture of halon, halon blends or halon-containing equipment.

Person means any individual or legal entity, including an individual, corporation, partnership, association, state, municipality, political subdivision of a state, Indian tribe, and any agency, department, or instrumentality of the United States, and any officer, agent, or employee thereof.

Technician means any person who performs testing, maintenance, service, or repair that could reasonably be expected to release halons from equipment into the atmosphere. Technician also means any person who performs disposal of equipment that could reasonably be expected to release halons from the equipment into the atmosphere. Technician includes but is not limited to installers, contractor employees, in-house service personnel, and in some cases, owners.

§ 82.270 Prohibitions.

(a) Effective April 6, 1998 no person may newly manufacture any halon blend. Halon blends manufactured solely for the purpose of aviation fire protection are not subject to this prohibition, provided that:

(1) The manufacturer or its designee is capable of recycling the blend to the relevant industry standards for the chemical purity of each individual halon;

(2) The manufacturer includes in all sales contracts for blends produced by it on or after April 6, 1998 the provision that the blend must be returned to it or its designee for recycling; and

(3) The manufacturer or its designee in fact recycles blends produced by the manufacturer on or after April 6, 1998 and returned to it for recycling to the relevant industry standards for the

chemical purity of each individual halon.

(b) Effective April 6, 1998, no person testing, maintaining, servicing, repairing, or disposing of halon-containing equipment or using such equipment for technician training may knowingly vent or otherwise release into the environment any halons used in such equipment.

(1) De minimis releases associated with good faith attempts to recycle or recover halon are not subject to this prohibition.

(2) Release of residual halon contained in fully discharged total flooding fire extinguishing systems would be considered a *de minimis* release associated with good faith attempts to recycle or recover halon.

(3) Release of halons during testing of fire extinguishing systems is not subject to this prohibition if the following four conditions are met:

(i) Systems or equipment employing suitable alternative fire extinguishing agents are not available;

(ii) System or equipment testing requiring release of extinguishing agent is essential to demonstrate system or equipment functionality;

(iii) Failure of the system or equipment would pose great risk to human safety or the environment; and

(iv) A simulant agent cannot be used in place of the halon during system or equipment testing for technical reasons.

(4) Releases of halons associated with research and development of halon alternatives, and releases of halons necessary during analytical determination of halon purity using established laboratory practices are exempt from this prohibition.

(5) This prohibition does not apply to qualification and development testing during the design and development process of halon-containing systems or equipment when such tests are essential to demonstrate system or equipment functionality and when a suitable simulant agent can not be used in place of the halon for technical reasons.

(6) This prohibition does not apply to the emergency release of halons for the legitimate purpose of fire extinguishing, explosion inertion, or other emergency applications for which the equipment or systems were designed.

(c) Effective April 6, 1998, organizations that employ technicians who test, maintain, service, repair or dispose of halon-containing equipment shall take appropriate steps to ensure that technicians hired on or before April 6, 1998 will be trained regarding halon emissions reduction by September 1, 1998. Technicians hired after April 6, 1998 shall be trained regarding halon emissions reduction within 30 days of hiring, or by September 1, 1998, whichever is later.

(d) Effective April 6, 1998, no person shall dispose of halon-containing equipment except by sending it for halon recovery to a manufacturer operating in accordance with NFPA 10 and NFPA 12A standards, a fire equipment dealer operating in accordance with NFPA 10 and NFPA 12A standards or a recycler operating in accordance with NFPA 10 and NFPA 12A standards. This provision does not apply to ancillary system devices such as electrical detection control components which are not necessary to the safe and secure containment of the halon within the equipment, to fully discharged total flooding systems, or to equipment containing only de minimis quantities of halons.

(e) No person shall dispose of halon except by sending it for recycling to a recycler operating in accordance with NFPA 10 and NFPA 12A standards, or by arranging for its destruction using one of the controlled processes approved by the Parties and listed in the definition of *destruction* in § 82.3.

(f) Effective April 6, 1998, no owner of halon-containing equipment shall allow halon release to occur as a result of failure to maintain such equipment.

[63 FR 11096, Mar. 5, 1998, as amended at 85 FR 15301, Mar. 17, 2020]

Subpart I—Ban on Refrigeration and Air-Conditioning Appliances Containing HCFCs

SOURCE: 74 FR 66467, Dec. 15, 2009, unless otherwise noted.

§ 82.300 Purpose.

The purpose of this subpart is to protect stratospheric ozone by restricting the sale and distribution of HCFC containing appliances under authority of section 615 of the Clean Air Act as amended in 1990.

§ 82.302 Definitions.

As used in this subpart, the term:

Appliance means any device which contains and uses a refrigerant and which is used for household or commercial purposes, including any air conditioner, refrigerator, chiller, or freezer.

Class I substance means any controlled substance designated as class I in 40 CFR part 82, appendix A to subpart A.

Class II substance means any controlled substance designated as class II in 40 CFR part 82, appendix B to subpart A.

Consumer, when used to describe a person taking action with regard to a product, means the ultimate purchaser, recipient or user of a product.

Distributor, when used to describe a person taking action with regard to a product, means:

(1) The seller of a product to a consumer or another distributor; or

(2) A person who sells or distributes that product in interstate commerce, including sale or distribution preceding export from, or following import to, the United States.

Hydrochlorofluorocarbon means any substance listed as class II in 40 CFR part 82, appendix B to subpart A.

Manufactured, for an appliance, means the date on which the appliance's refrigerant circuit is complete, the appliance can function, the appliance holds a refrigerant charge, and the appliance is ready for use for its intended purposes; for a pre-charged appliance component, ''manufactured'' means the date that the original equipment manufacturer has physically completed assembly of the component, the component is charged with refrigerant, and the component is ready for initial sale or distribution.

Person means any individual or legal entity, including an individual, corporation, partnership, association, State, municipality, political subdivision of a State, Indian tribe; any agency, department, or instrumentality of the United States; and any officer, agent, or employee thereof.

Pre-charged appliance means any appliance charged with refrigerant prior to sale or distribution, or offer for sale or distribution in interstate commerce.

Pre-charged appliance component means any portion of an appliance including but not limited to condensers, compressors, line sets, and coils that is charged with refrigerant prior to sale or distribution or offer for sale or distribution in interstate commerce.

Product means an item or category of items manufactured from raw or recycled materials which is used to perform a function or task.

Refrigerant means, for purposes of this subpart, any substance consisting in part or whole of a class I or class II ozone-depleting substance that is used for heat transfer purposes and provides a cooling effect.

§ 82.304 Prohibitions.

Effective January 1, 2010, no person may sell or distribute, or offer to sell or distribute, in interstate commerce any product identified in § 82.306.

§ 82.306 Prohibited products.

Effective January 1, 2010, the following products are subject to the prohibitions specified under § 82.304—

(a) Any pre-charged appliance manufactured on or after January 1, 2010 containing HCFC–22, HCFC–142b or a blend containing one or both of these controlled substances.

(b) Any pre-charged appliance component for air-conditioning or refrigeration appliances manufactured on or after January 1, 2010 containing HCFC–22, HCFC–142b, or a blend containing one or both of these controlled substances.

PARTS 83–84 [RESERVED]

PART 85—CONTROL OF AIR POLLUTION FROM MOBILE SOURCES

Subparts A–E [Reserved]

Subpart F—Exemption of Clean Alternative Fuel Conversions From Tampering Prohibition

Sec.
85.501 General applicability.
85.502 Definitions.
85.505 Overview.
85.510 Exemption provisions for new and relatively new vehicles/engines.
85.515 Exemption provisions for intermediate age vehicles/engines.
85.520 Exemption provisions for outside useful life vehicles/engines.
85.524 Legacy standards.
85.525 Applicable standards.
85.530 Vehicle/engine labels and packaging labels.
85.535 Liability, recordkeeping and end of year reporting.

Subparts G–N [Reserved]

Subpart O—Urban Bus Rebuild Requirements

85.1401 General applicability.
85.1402 Definitions.
85.1403 Particulate standard for pre-1994 model year urban buses effective at time of engine rebuild or engine replacement.
85.1404 Maintenance of records for urban bus operators; submittal of information; right of entry.
85.1405 Applicability.
85.1406 Certification.
85.1407 Notification of intent to certify.
85.1408 Objections to certification.
85.1409 Warranty.
85.1410 Changes after certification.
85.1411 Labeling requirements.
85.1412 Maintenance and submittal of records for equipment certifiers.
85.1413 Decertification.
85.1414 Alternative test procedures.
85.1415 Treatment of confidential information.

Subpart P—Importation of Motor Vehicles and Motor Vehicle Engines

85.1501 Applicability.
85.1502 Definitions.
85.1503 General requirements for importation of nonconforming vehicles and engines.
85.1504 Conditional admission.
85.1505 Final admission of certified vehicles.
85.1506 Inspection and testing of imported motor vehicles and engines.
85.1507 Maintenance of certificate holder's records.
85.1508 ''In Use'' inspections and recall requirements.
85.1509 Final admission of modification and test vehicles.
85.1510 Maintenance instructions, warranties, emission labeling and fuel economy requirements.
85.1511 Exemptions and exclusions.
85.1512 Admission of catalyst and O_2 sensor-equipped vehicles.
85.1513 Prohibited acts; penalties.
85.1514 Treatment of confidential information.
85.1515 Emission standards and test procedures applicable to imported nonconforming motor vehicles and motor vehicle engines.

Subpart Q [Reserved]

Subpart R—Exclusion and Exemption of Motor Vehicles and Motor Vehicle Engines

85.1701 General applicability.
85.1702 Definitions.
85.1703 Definition of motor vehicle.
85.1704 Who may request an exemption.
85.1705 Testing exemption.
85.1706 Pre-certification exemption.
85.1707 Display exemption.
85.1708 National security exemption.
85.1709 Export exemptions.
85.1710 Granting of exemptions.
85.1711 Submission of exemption requests.
85.1712 Treatment of confidential information.
85.1713—85.1714 [Reserved]
85.1715 Aircraft meeting the definition of motor vehicle.
85.1716 Approval of an emergency vehicle field modification (EVFM).

Subpart S—Recall Regulations

85.1801 Definitions.
85.1802 Notice to manufacturer of nonconformity; submission of Remedial Plan.
85.1803 Remedial Plan.
85.1804 Approval of Plan: Implementation.
85.1805 Notification to vehicle or engine owners.
85.1806 Records and reports.
85.1807 Public hearings.
85.1808 Treatment of confidential information.
APPENDIX A TO SUBPART S OF PART 85—INTERPRETIVE RULING FOR §85.1803—REMEDIAL PLANS

Subpart T—Emission Defect Reporting Requirements

85.1901 Applicability.
85.1902 Definitions.
85.1903 Emissions defect information report.

85.1904 Voluntary emissions recall report; quarterly reports.
85.1905 Alternative report formats.
85.1906 Report filing: Record retention.
85.1907 Responsibility under other legal provisions preserved.
85.1908 Disclaimer of production warranty applicability.
85.1909 Treatment of confidential information.

Subpart U [Reserved]

Subpart V—Emissions Control System Performance Warranty Regulations and Voluntary Aftermarket Part Certification Program

85.2101 General applicability.
85.2102 Definitions.
85.2103 Emission performance warranty.
85.2104 Owners' compliance with instructions for proper maintenance and use.
85.2105 Aftermarket parts.
85.2106 Warranty claim procedures.
85.2107 Warranty remedy.
85.2109 Inclusion of warranty provisions in owners' manuals and warranty booklets.
85.2110 Submission of owners' manuals and warranty statements to EPA.
85.2111 Warranty enforcement.
85.2112 Applicability.
85.2113 Definitions.
85.2114 Basis of certification.
85.2115 Notification of intent to certify.
85.2116 Objections to certification.
85.2117 Warranty and dispute resolution.
85.2118 Changes after certification.
85.2119 Labeling requirements.
85.2120 Maintenance and submittal of records.
85.2121 Decertification.
85.2122 Emission-critical parameters.
85.2123 Treatment of confidential information.
APPENDIX I TO SUBPART V OF PART 85—RECOMMENDED TEST PROCEDURES AND TEST CRITERIA AND RECOMMENDED DURABILITY PROCEDURES TO DEMONSTRATE COMPLIANCE WITH EMISSION CRITICAL PARAMETERS
APPENDIX II TO SUBPART V OF PART 85—ARBITRATION RULES

Subpart W—Emission Control System Performance Warranty Short Tests

85.2201 Applicability.
85.2207 Onboard diagnostic test standards.
85.2222 Onboard diagnostic test procedures.
85.2223 Onboard diagnostic test report.
85.2231 Onboard diagnostic test equipment requirements.

Subpart X—Determination of Model Year for Motor Vehicles and Engines Used in Motor Vehicles Under Section 177 and Part A of Title II of the Clean Air Act

85.2301 Applicability.
85.2302 Definition of model year.
85.2303 Duration of model year.
85.2304 Definition of production period.
85.2305 Duration and applicability of certificates of conformity.

Subpart Y—Fees for the Motor Vehicle and Engine Compliance Program

85.2401 Assessment of fees.
APPENDIXES I–VII TO PART 85 [RESERVED]
APPENDIX VIII TO PART 85—VEHICLE AND ENGINE PARAMETERS AND SPECIFICATIONS

AUTHORITY: 42 U.S.C. 7401–7671q.

Subparts A–E [Reserved]

Subpart F—Exemption of Clean Alternative Fuel Conversions From Tampering Prohibition

SOURCE: 76 FR 19866, Apr. 8, 2011, unless otherwise noted.

§ 85.501 General applicability.

(a) This subpart describes the provisions related to an exemption from the tampering prohibition in Clean Air Act section 203(a) (42 U.S.C. 7522(a)) for light-duty vehicles, light-duty trucks, medium-duty passenger vehicles, heavy-duty vehicles, and heavy-duty engines. This subpart F does not apply for highway motorcycles or for nonroad or stationary engines or equipment.

(b) For purposes of this subpart, the term ''you'' generally means a clean alternative fuel conversion manufacturer, which may also be called ''conversion manufacturer'' or ''converter''.

§ 85.502 Definitions.

The definitions in this section apply to this subpart. All terms that are not defined in this subpart have the meaning given in 40 CFR part 86. All terms that are not defined in this subpart or in 40 CFR part 86 have the meaning given in the Clean Air Act. The definitions follow:

Clean alternative fuel conversion (or ''fuel conversion'' or ''conversion system'') means any alteration of a motor vehicle/engine, its fueling system, or the integration of these systems, that allows the vehicle/engine to operate on a fuel or power source different from the fuel or power source for which the vehicle/engine was originally certified; and that is designed, constructed, and applied consistent with good engineering judgment and in accordance with all applicable regulations. A clean alternative fuel conversion also means the components, design, and instructions to perform this alteration.

Clean alternative fuel conversion manufacturer (or ''conversion manufacturer'' or ''converter'') means any person that manufactures, assembles, sells, imports, or installs a motor vehicle/engine fuel conversion for the purpose of use of a clean alternative fuel.

Conversion model year means the clean alternative fuel conversion manufacturer's annual production period which includes January 1 of such calendar year. A specific model year may not include January 1 from the previous year or the following year. This is based on the expectation that production periods generally run on consistent schedules from year to year. Conversion model years may not circumvent or skip an annual production period. The term conversion model year means the calendar year if the converter does not have a different annual production period.

Date of conversion means the date on which the clean alternative fuel conversion system is fully installed and operable.

Dedicated vehicle/engine means any vehicle/engine engineered and designed to be operated using a single fuel.

Dual-fuel vehicle/engine means any vehicle/engine engineered and designed to be operated on two or more different fuels, but not on a mixture of the fuels.

Heavy-duty engines describes all engines intended for use in heavy-duty vehicles, covered under the applicability of 40 CFR part 86, subpart A.

Light-duty and heavy-duty chassis certified vehicles describes all light-duty vehicles, light-duty trucks, medium duty passenger vehicles, and heavy-duty complete and incomplete vehicles covered under the applicability of 40 CFR part 86, subpart S.

Mixed-fuel vehicle/engine means any vehicle/engine engineered and designed to be operated on the original fuel(s), alternative fuel(s), or a mixture of two or more fuels that are combusted together. Mixed-fuel vehicles/engines include flexible-fuel vehicles/engines as defined in 40 CFR part 86 subpart S.

Original equipment manufacturer (OEM) means the original manufacturer of the new vehicle/engine or relating to the vehicle/engine in its original certified configuration.

Original model year means the model year in which a vehicle/engine was originally certified by the original equipment manufacturer, as noted on the certificate and on the emission control information label.

We (us, our) means the Administrator of the Environmental Protection Agency or any authorized representative.

§ 85.505 Overview.

(a) You are exempted from the tampering prohibition in Clean Air Act section 203(a)(3) (42 U.S.C. 7522)(a)(3) (''tampering'') if you satisfy all the provisions of this subpart.

(b) The tampering exemption provisions described in this subpart are differentiated based on the age of the vehicle/engine at the point of conversion as follows:

(1) ''New and relatively new'' refers to a vehicle/engine where the date of conversion is in a calendar year that is not more than one year after the original model year. *See* § 85.510 for provisions that apply specifically to new and relatively new vehicles/engines.

(2) ''Intermediate age'' refers to a vehicle/engine that has not exceeded the useful life (in years, miles, or hours of operation) applicable to the vehicle/engine as originally certified, excluding new and relatively new vehicles/engines. *See* § 85.515 for provisions that apply specifically to intermediate-age vehicles/engines.

(3) ''Outside useful life'' refers to any vehicle/engine that has exceeded the useful life (in years, miles, or hours of operation) applicable to the vehicle/engine as originally certified. *See* § 85.520 for provisions that apply specifically to outside useful life vehicles/engines.

(c) If the converted vehicle/engine is a dual-fuel or mixed-fuel vehicle/engine, you must submit test data using each type of fuel, except that if you wish to certify to the same standards as the OEM vehicle/engine, you may omit testing for the fuel originally used to certify the vehicle/engine if you comply with § 85.510(b)(10)(ii), (iii), and (iv), § 85.515(b)(10)(iii)(B), (C), and (D), or § 85.520(b)(6)(iii)(B), (C), and (D), as applicable.

(d) This subpart specifies certain reporting requirements. We may ask you to give us more information than we specify in this subpart to determine whether your vehicles/engines conform to the requirements of this subpart. We may ask you to give us less information or do less testing than we specify in this subpart.

(e) EPA may require converters to submit vehicles/engines for EPA testing under any of the three age based programs. Under § 85.510 or § 85.515, if a vehicle/engine is selected for confirmatory testing as part of the demonstration and notification process, the vehicle/engines must satisfy the applicable intermediate and full useful life standards using the appropriate deterioration factors to qualify for an exemption from the tampering prohibition. If an outside useful life vehicle/engine is selected for testing, the vehicle/engine must demonstrate that emissions are maintained or improved upon after conversion to qualify for an exemption from the tampering prohibition.

(f) If you have previously used small volume conversion manufacturer or qualified small volume test group/engine family procedures and you may exceed the volume thresholds using the sum described in § 85.535(f) to determine small volume status in 40 CFR 86.1838–01, 40 CFR 86.098–14, and 40 CFR 86.096–24(e)(2) as appropriate, you must satisfy the requirements for conversion manufacturers who do not qualify for small volume exemptions or your exemption from tampering is no longer valid.

(g) An exemption from the prohibition on tampering applies to previously issued alternative fuel conversion certificates of conformity for the applicable conversion test group/engine family and/or evaporative/refueling family, as long as the conditions under which the certificate was issued remain unchanged, such as small volume manufacturer or qualified small volume test group/engine family status. Your exemption from tampering is valid only if the conversion is installed on the OEM test groups/engine families and/or evaporative emissions/refueling families listed on the certificate.

(h) The applicable useful life of a clean alternative fuel converted vehicle/engine shall end at the same time the OEM vehicle's/engine's original useful life ends.

§ 85.510 Exemption provisions for new and relatively new vehicles/engines.

(a) You are exempted from the tampering prohibition with respect to new and relatively new vehicles/engines if you certify the conversion system to the emission standards specified in § 85.525 as described in paragraph (b) in this section; you meet the labeling and packaging requirements in § 85.530 before you sell, import or otherwise facilitate the use of a clean alternative fuel conversion system; and you meet the liability, recordkeeping, and end of year reporting requirements in § 85.535.

(b) Certification under this section must be based on the certification procedures such as those specified in 40 CFR part 86, subparts A, B, and S and 40 CFR part 1065, as applicable, subject to the following exceptions and special provisions:

(1) Test groups and evaporative/refueling families for light-duty and heavy-duty chassis certified vehicles.

(i) Small volume conversion manufacturers and qualified small volume test groups.

(A) If criteria for small volume manufacturer or qualified small volume test groups are met as defined in 40 CFR 86.1838–01, you may combine light-duty vehicles or heavy-duty vehicles which can be chassis certified under 40 CFR part 86, subpart S using good engineering judgment into conversion test groups if the following criteria are satisfied instead of those specified in 40 CFR 86.1827–01.

(*1*) Same OEM and OEM model year.

(*2*) Same OBD group.

(*3*) Same vehicle classification (*e.g.* light-duty vehicle, heavy-duty vehicle).

(*4*) Engine displacement is within 15% of largest displacement or 50 CID, whichever is larger.

(*5*) Same number of cylinders or combustion chambers.

(*6*) Same arrangement of cylinders or combustion chambers (*e.g.* in-line, v-shaped).

(*7*) Same combustion cycle (*e.g.*, two stroke, four stroke, Otto-cycle, diesel-cycle).

(*8*) Same engine type (*e.g.* piston, rotary, turbine, air cooled vs. water cooled).

(*9*) Same OEM fuel type (except otherwise similar gasoline and E85 flexible-fuel vehicles may be combined into dedicated alternative fuel vehicles).

(*10*) Same fuel metering system (*e.g.* throttle body injection vs. port injection).

(*11*) Same catalyst construction (*e.g.* metal vs. ceramic substrate).

(*12*) All converted vehicles are subject to the most stringent emission standards used in certifying the OEM test groups within the conversion test group.

(B) EPA-established scaled assigned deterioration factors for both exhaust and evaporative emissions may be used for vehicles with over 10,000 miles if the criteria for small volume manufacturer or qualified small volume test groups are met as defined in 40 CFR 86.1838–01. This deterioration factor will be adjusted according to vehicle or engine miles of operation. The deterioration factor is intended to predict the vehicle's emission levels at the end of the useful life. EPA may adjust these scaled assigned deterioration factors if we find the rate of deterioration non-constant or if the rate differs by fuel type.

(C) As part of the conversion system description provided in the application for certification, conversion manufacturers using EPA assigned deterioration factors must present detailed information to confirm the durability of all relevant new and existing components and to explain why the conversion system will not harm the emission control system or degrade the emissions.

(ii) Conversion evaporative/refueling families are identical to the OEM evaporative/refueling families unless the OEM evaporative emission system is no longer functionally necessary. You must create any new evaporative families according to 40 CFR 86.1821–01.

(2) Engine families and evaporative/refueling families for heavy-duty engines.

(i) Small volume conversion manufacturers and qualified small volume heavy-duty engine families.

(A) If criteria for small volume manufacturer or qualified small volume engine families are met as defined in 40 CFR 86.098–14 and 40 CFR 86.096–24(e)(2) you may combine heavy-duty engines using good engineering judgment into conversion engine families if the following criteria are satisfied instead of those specified in 40 CFR part 86, subpart A.

(*1*) Same OEM.

(*2*) Same OBD group after MY 2013.

(*3*) Same service class (*e.g.* light heavy-duty diesel engines, medium heavy-duty diesel engines, heavy heavy-duty diesel engines).

(*4*) Engine displacement is within 15% of largest displacement or 50 CID, whichever is larger.

(*5*) Same number of cylinders.

(*6*) Same arrangement of cylinders.

(*7*) Same combustion cycle.

(*8*) Same method of air aspiration.

(*9*) Same fuel type (*e.g.* diesel/gasoline).

(*10*) Same fuel metering system (*e.g.* mechanical direct or electronic direct injection).

(*11*) Same catalyst/filter construction (*e.g.* metal vs. ceramic substrate).

(*12*) All converted engines are subject to the most stringent emission standards. For example, 2005 and 2007 heavy-duty diesel engines may be in the same family if they meet the most stringent (2007) standards.

(*13*) Same emission control technology (*e.g.*, internal or external EGR).

(B) EPA-established scaled assigned deterioration factors for both exhaust and evaporative emissions may be used for engines with over 10,000 miles if the criteria for small volume manufacturer or qualified small volume engine families are met as defined in 40 CFR 86.098–14 and 40 CFR 86.096–24(e)(2). This deterioration factor will be adjusted according to vehicle or engine miles of operation. The deterioration factor is

intended to predict the engine's emission levels at the end of the useful life. EPA may adjust these scaled assigned deterioration factors if we find the rate of deterioration non-constant or if the rate differs by fuel type.

(C) As part of the conversion system description provided in the application for certification, conversion manufacturers using EPA assigned deterioration factors must present detailed information to confirm the durability of all relevant new and existing components and to explain why the conversion system will not harm the emission control system or degrade the emissions.

(ii) Conversion evaporative/refueling families are identical to the OEM evaporative/refueling families unless the OEM evaporative emission system is no longer functionally necessary. You must create any new evaporative families according to 40 CFR 86.096–24(a).

(3) Conversion test groups/engine families for small volume conversion manufacturers and qualified small volume test groups/engine families may include vehicles/engines that are subject to different OEM emission standards; however, all the vehicles/engines certified under this subpart in a single conversion test group/engine family are subject to the most stringent standards that apply for vehicles/engines included in the conversion test group/engine family. For example, if OEM vehicle test groups originally certified to Tier 2, Bin 4 and Bin 5 standards are in the same conversion test group for purposes of fuel conversion, all the vehicles certified in the conversion test group under this subpart are subject to the Tier 2, Bin 4 standards. Conversion manufacturers may choose to certify a conversion test group/engine family to a more stringent standard than the OEM did. The optional, more stringent standard would then apply to all OEM test groups/engine families within the conversion test group/engine family. This paragraph (b)(3) does not apply to conversions to dual-fuel/mixed-fuel vehicles/engines, as provided in paragraph (b)(7) of this section.

(4)–(5) [Reserved]

(6) Durability testing is required unless the criteria for small volume manufacturer or qualified small volume test groups/engine families are met as defined in 40 CFR 86.1838–01, 40 CFR 86.098–14, and 40 CFR 86.096–24(e)(2), as applicable.

(7) Conversion test groups/engine families for conversions to dual-fuel or mixed-fuel vehicles/engines cannot include vehicles/engines subject to different emission standards unless applicable exhaust and OBD demonstrations are also conducted for the original fuel(s) demonstrating compliance with the most stringent standard represented in the test group. However for small volume conversion manufacturers and qualified small volume test groups/engine families the data generated from exhaust emission testing on the new fuel for dual-fuel or mixed-fuel test vehicles/engines may be carried over to vehicles/engines which otherwise meet the test group/engine family criteria and for which the test vehicle/engine data demonstrate compliance with the application vehicle/engine standard. Clean alternative fuel conversion evaporative families for dual-fuel or mixed-fuel vehicles may not include vehicles/engines which were originally certified to different evaporative emissions standards unless evaporative/refueling demonstrations are also conducted for the original fuel(s) demonstrating compliance with the most stringent standard represented in the evaporative/refueling family.

(8) The vehicle/engine selected for testing must qualify as a worst-case vehicle/engine under 40 CFR 86.1828–10 or 40 CFR 86.096–24(b)(2) through (b)(3), as applicable.

(9) *OBD requirements.* (i) The OBD system must properly detect and identify malfunctions in all monitored emission-related powertrain systems or components including any new monitoring capability necessary to identify potential emission problems associated with the new fuel.

(ii) Conduct all OBD testing necessary to demonstrate compliance with 40 CFR 86.010–18 or 86.1806–05.

(iii) Submit the applicable OBD reporting requirements set forth in 40 CFR part 86, subparts A and S, and submit the following statement of compliance if the OEM vehicles/engines were required to be OBD-equipped:

The test group/engine family converted to an alternative fuel has fully functional OBD systems and therefore meets the OBD requirements specified in 40 CFR part 86 when operating on the alternative fuel.

(10) In lieu of specific certification test data, you may submit the following attestations for the appropriate statements of compliance, if you have sufficient basis to prove the statement is valid.

(i) The test group/engine family converted to an alternative fuel has properly exercised the optional and applicable statements of compliance or waivers in the certification regulations such as those specified in 40 CFR part 86, subparts A, B, and S and 40 CFR part 1065. Attest to each statement or waiver in your application for certification.

(ii) The test group/engine family converted to dual-fuel or mixed-fuel operation retains all the OEM fuel system, engine calibration, and emission control system functionality when operating on the fuel with which the vehicle/engine was originally certified.

(iii) The test group/engine family converted to dual fuel or mixed-fuel operation retains all the functionality of the OEM OBD system (if so equipped) when operating on the fuel with which the vehicle/engine was originally certified.

(iv) The test group/engine family converted to dual-fuel or mixed-fuel operation properly purges hydrocarbon vapor from the evaporative emission canister when the vehicle/engine is operating on the alternative fuel.

(11) Certification fees apply per 40 CFR 1027.

(12) A certificate issued under this section is valid starting with the indicated effective date and expires on December 31 of the conversion model year for which it is issued. You may apply for a certificate of conformity for the next conversion model year using the applicable provisions for carryover certification. Even after the certificate expires, your exemption from the prohibition on tampering remains valid for the applicable conversion test group/engine family and/or evaporative/refueling family, as long as the conditions under which the certificate was issued remain unchanged, such as small volume manufacturer or qualified small volume test group/engine family status. Your exemption from tampering is valid only if the conversion is installed on the OEM test groups/engine families and/or evaporative emissions/refueling families listed on the certificate. For example, if you have received a clean alternative fuel conversion certificate of conformity in conversion model year 2011 for converting a 2010 model year OEM test group/evaporative/refueling family, your exemption from tampering continues to apply for the conversion of the same 2010 model year OEM test group/evaporative/refueling family as long as the conditions under which the certificate was issued remain unchanged, such as small volume manufacturer status.

(13) Conversion systems must be properly installed and adjusted such that the vehicle/engine operates consistent with the principles of good engineering judgment and in accordance with all applicable regulations.

[76 FR 19866, Apr. 8, 2011, as amended at 79 FR 23681, Apr. 28, 2014]

§ 85.515 Exemption provisions for intermediate age vehicles/engines.

(a) You are exempted from the tampering prohibition with respect to intermediate age vehicles/engines if you properly test, document and notify EPA that the conversion system complies with the emission standards specified in § 85.525 as described in paragraph (b) of this section; you meet the labeling requirements in § 85.530 before you sell, import or otherwise facilitate the use of a clean alternative fuel conversion system; and you meet the liability, recordkeeping, and end of year reporting requirements in § 85.535. You may also meet the requirements under this section by complying with the requirements in § 85.510.

(b) Documenting and notifying EPA under this section includes demonstrating compliance with all the provisions in this section and providing all notification information to EPA. You may notify us as described in this section instead of certifying the clean alternative fuel conversion system. You must demonstrate compliance with all

exhaust and evaporative emissions standards by conducting all exhaust and evaporative emissions and durability testing as required for OEM certification subject to the exceptions and special provisions permitted in § 85.510. This paragraph (b) provides additional special provisions applicable to intermediate age vehicles/engines. Paragraph (b) is applicable to all conversion manufacturers unless otherwise specified.

(1) Conversion test groups for light-duty and heavy-duty chassis certified vehicles may be grouped together into an exhaust conversion test group using the criteria described in § 85.510(b)(1)(i)(A), except that the same OBD group is not a criterion. Evaporative/refueling families may be grouped together using the criteria described in § 85.510(b)(1)(ii).

(2) Conversion engine families for heavy-duty engines may be grouped together into an exhaust conversion engine family using the criteria described in § 85.510(b)(2)(i)(A), except that the same OBD group is not a criterion. Evaporative/refueling families may be grouped together using the criteria described in § 85.510(b)(2)(ii).

(3) Conversion test groups/engine families may include vehicles/engines that are subject to different OEM emission standards; however, all vehicles/engines in a single conversion test group/engine family are subject to the most stringent standards that apply for vehicles/engines included in the conversion test group/engine family. For example, if OEM vehicle test groups originally certified to Tier 2, Bin 4 and Bin 5 standards are in the same conversion test group for purposes of fuel conversion, all the vehicles in the conversion test group under this subpart are subject to the Tier 2, Bin 4 standards. This paragraph (b)(3) does not apply to conversions to dual-fuel/mixed-fuel vehicles/engines, as provided in paragraph (b)(7).

(4) EPA-established scaled assigned deterioration factors for both exhaust and evaporative emissions may be used for vehicles/engines with over 10,000 miles if the criteria for small volume manufacturer or qualified small volume test groups/engine families are met as defined in 40 CFR 86.1838–01, 40 CFR 86.098–14, or 40 CFR 86.096–24(e)(2), as appropriate. This deterioration factor will be adjusted according to vehicle/engine miles or hours of operation. The deterioration factor is intended to predict the vehicle/engine's emission level at the end of the useful life. EPA may adjust these scaled assigned deterioration factors if we find the rate of deterioration non-constant or if the rate differs by fuel type.

(5) As part of the conversion system description required by paragraph (b)(10)(i) of this section, small volume conversion manufacturers and qualified small volume test groups/engine families using EPA assigned deterioration factors must present detailed information to confirm the durability of all relevant new and existing components and explain why the conversion system will not harm the emission control system or degrade the emissions.

(6) Durability testing is required unless the criteria for small volume manufacturer or qualified small volume test groups/engine families are met as defined in 40 CFR 86.1838–01, 40 CFR 86.098–14, or 40 CFR 86.096–24(e)(2), as applicable. Durability procedures for large volume conversion manufacturers of intermediate age light-duty and heavy-duty chassis certified vehicles that follow provisions in 40 CFR 86.1820–01 may eliminate precious metal composition and catalyst grouping statistic when creating clean alternative fuel conversion durability groupings.

(7) Conversion test groups/engine families for conversions to dual-fuel or mixed-fuel vehicles/engines may not include vehicles/engines subject to different emissions standards unless applicable exhaust and OBD demonstrations are also conducted for the original fuel(s) demonstrating compliance with the most stringent standard represented in the test group/engine family. However the data generated from testing on the new fuel for dual-fuel or mixed/fuel test vehicles/engines may be carried over to vehicles/engines that otherwise meet the conversion test group/engine family criteria and for which the test vehicle/engine data demonstrate compliance with the applicable vehicle/engine standards.

Clean alternative fuel conversion evaporative families for dual-fuel or mixed-fuel vehicles/engines cannot include vehicles/engines that were originally certified to different evaporative emissions standards unless evaporative/refueling demonstrations are also conducted for the original fuel(s) demonstrating compliance with the most stringent standard represented in the evaporative/refueling family.

(8) You must conduct all exhaust and all evaporative and refueling emissions testing with a worst-case vehicle/engine to show that the conversion test group/engine family complies with exhaust and evaporative/refueling emission standards, based on the certification procedures such as those specified in 40 CFR part 86, subparts A, B, and S and 40 CFR part 1065.

(9) *OBD requirements*. (i) The OBD system must properly detect and identify malfunctions in all monitored emission-related powertrain systems or components including any new monitoring capability necessary to identify potential emission problems associated with the new fuel. These include but are not limited to: Fuel trim lean and rich monitors, catalyst deterioration monitors, engine misfire monitors, oxygen sensor deterioration monitors, EGR system monitors, if applicable, and vapor leak monitors, if applicable. No original OBD system monitor that is still applicable to the vehicle/engine may be aliased, removed, bypassed, or turned-off. No MILs shall be illuminated after the conversion. Readiness flags must be properly set for all monitors that identify any malfunction for all monitored components.

(ii) Subsequent to the vehicle/engine fuel conversion, you must clear all OBD codes and reset all OBD monitors to not-ready status using an OBD scan tool appropriate for the OBD system in the vehicle/engine in question. You must operate the vehicle/engine with the new fuel on representative road operation or chassis dynamometer/engine dynamometer testing cycles to satisfy the monitors' enabling criteria. When all monitors have reset to a ready status, you must submit an OBD scan tool report showing that with the vehicle/engine operating in the key-on/engine-on mode, all supported monitors have reset to a ready status and no emission related ''pending'' (or potential) or ''confirmed'' (or MIL-on) diagnostic trouble codes (DTCs) have been set. The MIL must not be commanded ''On'' or be illuminated. A MIL check must also be conducted in a key-on/engine-off mode to verify that the MIL is functioning properly. You must include the VIN/EIN number of the test vehicle/engine. If necessary, the OEM evaporative emission readiness monitor may remain unset for dedicated gaseous fuel conversion systems.

(iii) In addition to conducting OBD testing described in this paragraph (b)(9), you must submit to EPA the following statement of compliance if the OEM vehicles/engines were required to be OBD-equipped:

The test group/engine family converted to an alternative fuel has fully functional OBD systems and therefore meets the OBD requirements specified in 40 CFR part 86 when operating on the alternative fuel.

(10) You must notify us by electronic submission in a format specified by the Administrator with all required documentation. The following must be submitted:

(i) You must describe how your conversion system qualifies as a clean alternative fuel conversion. You must include emission test results from the required exhaust, evaporative emissions, and OBD testing, applicable exhaust and evaporative emissions standards and deterioration factors. You must also include a description of how the test vehicle/engine selected qualifies as a worst-case vehicle/engine under 40 CFR 86.1828–10 or 40 CFR 86.096–24(b)(2) through (b)(3) as applicable.

(ii) You must describe the group of vehicles/engines (conversion test group/conversion engine family) that are covered by your notification based on the criteria specified in paragraph (b)(1) or (b)(2) of this section.

(iii) In lieu of specific test data, you may submit the following attestations for the appropriate statements of compliance, if you have sufficient basis to prove the statement is valid.

(A) The test group/engine family converted to an alternative fuel has properly exercised the optional and applicable statements of compliance or waivers in the certification regulations such as those specified in 40 CFR part 86, subparts A, B, and S and 40 CFR part 1065. Attest to each statement or waiver in your notification.

(B) The test group/engine family converted to dual-fuel or mixed-fuel operation retains all the OEM fuel system, engine calibration, and emission control system functionality when operating on the fuel with which the vehicle/engine was originally certified.

(C) The test group/engine family converted to dual-fuel or mixed-fuel operation retains all the functionality of the OEM OBD system (if the OEM vehicles/engines were required to be OBD equipped) when operating on the fuel for which the vehicle/engine was originally certified.

(D) The test group/engine family converted to dual-fuel or mixed-fuel operation properly purges hydrocarbon vapor from the evaporative emission canister when the vehicle/engine is operating on the alternative fuel.

(iv) Include any other information as the Administrator may deem appropriate to establish that the conversion system is for the purpose of conversion to a clean alternative fuel and meets applicable emission standards.

(11) [Reserved]

(12) Your exemption from the prohibition on tampering remains valid for the applicable conversion test group/engine family and/or evaporative/refueling family, as long as the conditions under which you previously complied remain unchanged, such as small volume manufacturer or qualified small volume test group/engine family status. Your exemption from tampering is valid only if the conversion is installed on the OEM test groups/engine families and/or evaporative emissions/refueling families listed on the notification. For example, if you have complied properly with the provisions in this section in calendar year 2011 for converting a model year 2006 OEM test group/evaporative/refueling family, your exemption from tampering continues to apply for the conversion of the same model year 2006 OEM test group/evaporative/refueling family as long as the conditions under which the notification was submitted remain unchanged.

(13) Conversion systems must be properly installed and adjusted such that the vehicle/engine operates consistent with the principles of good engineering judgment and in accordance with all applicable regulations.

[76 FR 19866, Apr. 8, 2011, as amended at 79 FR 23681, Apr. 28, 2014]

§ 85.520 Exemption provisions for outside useful life vehicles/engines.

(a) You are exempted from the tampering prohibition with respect to outside useful life vehicles/engines if you properly document and notify EPA that the conversion system satisfies all the provisions in this section; you meet the labeling requirements in § 85.530 before you sell, import or otherwise facilitate the use of a clean alternative fuel conversion system; and you meet the applicable requirements in § 85.535. You may also meet the requirements under this section by complying with the provisions in § 85.515.

(b) Documenting and notifying EPA under this section includes the following provisions:

(1) You must notify us as described in this section.

(2) Conversion test groups, evaporative/refueling families, and conversion engine families may be the same as those allowed for the intermediate age vehicle/engine program in § 85.515(b)(1) and (2).

(3) You must use good engineering judgment to specify, use, and assemble fuel system components and other hardware and software that are properly designed and matched for the vehicles/engines in which they will be installed. Good engineering judgment also dictates that any testing or data used to satisfy demonstration requirements be generated at a quality laboratory that follows good laboratory practices and that is capable of performing official EPA emission tests.

(4) *OBD requirements.* (i) The OBD system must properly detect and identify malfunctions in all monitored emission-related powertrain systems or components including any new monitoring capability necessary to identify

potential emission problems associated with the new fuel. These include but are not limited to: Fuel trim lean and rich monitors, catalyst deterioration monitors, engine misfire monitors, oxygen sensor deterioration monitors, EGR system monitors, if applicable, and vapor leak monitors, if applicable. No original OBD system monitor that is still applicable to the vehicle/engine may be aliased, removed, bypassed, or turned-off. No MILs shall be illuminated after the conversion. Readiness flags must be properly set for all monitors that identify any malfunction for all monitored components.

(ii) Subsequent to the vehicle/engine fuel conversion, you must clear all OBD codes and reset all OBD monitors to not-ready status using an OBD scan tool appropriate for the OBD system in the vehicle/engine in question. You must operate the vehicle/engine with the new fuel on representative road operation or chassis dynamometer/engine dynamometer testing cycles to satisfy the monitors' enabling criteria. When all monitors have reset to a ready status, you must submit an OBD scan tool report showing that with the vehicle/engine operating in the key-on/engine-on mode, all supported monitors have reset to a ready status and no emission related ''pending'' (or potential) or ''confirmed'' (or MIL-on) diagnostic trouble codes (DTCs) have been stored. The MIL must not be commanded ''On'' or be illuminated. A MIL check must also be conducted in a key-on/engine-off mode to verify that the MIL is functioning properly. You must include the VIN/EIN number of the test vehicle/engine. If necessary, the OEM evaporative emission readiness monitor may remain unset for dedicated gaseous fuel conversion systems.

(iii) In addition to conducting OBD testing described in this paragraph (b)(4), you must submit to EPA the following statement of compliance if the OEM vehicles/engines were required to be OBD-equipped:

The test group/engine family converted to an alternative fuel has fully functional OBD systems and therefore meets the OBD requirements specified in 40 CFR part 86 when operating on the alternative fuel.

(5) Conversion test groups/engine families for conversions to dual-fuel or mixed-fuel vehicles/engines may not include vehicles/engines subject to different emissions standards unless applicable exhaust and OBD demonstrations are also conducted for the original fuel(s) demonstrating compliance with the most stringent standard represented in the test group. However the data generated from testing on the new fuel for dual-fuel or mixed-fuel test vehicles/engines may be carried over to vehicles/engines that otherwise meet the conversion test group/engine family criteria and for which the test vehicle/engine data demonstrate compliance with the applicable vehicle/engine standards. Clean alternative fuel conversion evaporative families for dual-fuel or mixed-fuel vehicles/engines cannot include vehicles/engines that were originally certified to different evaporative emissions standards.

(6) You must notify us by electronic submission in a format specified by the Administrator with all required documentation. The following must be submitted.

(i) You must describe how your conversion system complies with the good engineering judgment criteria in § 85.520(b)(3) and/or other requirements under this subpart or other applicable subparts such that the conversion system qualifies as a clean alternative fuel conversion. The submission must provide a level of technical detail sufficient for EPA to confirm the conversion system's ability to maintain or improve on emission levels in a worst case vehicle/engine. The submission of technical information must include a complete characterization of exhaust and evaporative emissions control strategies, the fuel delivery system, durability, and specifications related to OBD system functionality. You must present detailed information to confirm the durability of all relevant new and existing components and to explain why the conversion system will not harm the emission control system or degrade the emissions. EPA may ask you to supply additional information, including test data, to support the claim that the conversion system does not increase emissions and involves good engineering judgment that is

being applied for purposes of conversion to a clean alternative fuel.

(ii) You must describe the group of vehicles/engines (conversion test group/conversion engine family) that is covered by your notification based on the criteria specified in paragraph (b)(2) of this section.

(iii) In lieu of specific test data, you may submit the following attestations for the appropriate statements of compliance, if you have sufficient basis to prove the statement is valid.

(A) The test group/engine family converted to an alternative fuel has properly exercised the optional and applicable statements of compliance or waivers in the certification regulations such as those specified in 40 CFR part 86, subparts A, B, and S and 40 CFR part 1065. Attest to each statement or waiver in your notification.

(B) The test group/engine family converted to dual-fuel or mixed-fuel operation retains all the OEM fuel system, engine calibration, and emission control system functionality when operating on the fuel with which the vehicle/engine was originally certified.

(C) The test group/engine family converted to dual-fuel or mixed-fuel operation retains all the functionality of the OEM OBD system (if the OEM vehicles/engines were required to be OBD equipped) when operating on the fuel with which the vehicle/engine was originally certified.

(D) The test group/engine family converted to dual-fuel or mixed-fuel operation properly purges hydrocarbon vapor from the evaporative emission canister when the vehicle/engine is operating on the alternative fuel.

(E) The test group/engine family converted to an alternative fuel uses fueling systems, evaporative emission control systems, and engine powertrain components that are compatible with the alternative fuel and designed with the principles of good engineering judgment.

(iv) You must include any other information as the Administrator may deem appropriate, which may include test data, to establish the conversion system is for the purpose of conversion to a clean alternative fuel.

(7) Conversion systems must be properly installed and adjusted such that the vehicle/engine operates consistent with the principles of good engineering judgment and in accordance with all applicable regulations.

(8) EPA may ask for any documentation and/or ask you to conduct emission testing to demonstrate the conversion is for the purpose of a clean alternative fuel.

[76 FR 19866, Apr. 8, 2011, as amended at 79 FR 23681, Apr. 28, 2014]

§ 85.524 Legacy standards.

Prior to April 8, 2011, the following emission standards applied for conversions of vehicles/engines with an original model year of 1992 or earlier:

(a) *Exhaust hydrocarbons.* Light-duty vehicles must meet the Tier 0 hydrocarbon standard specified in 40 CFR 86.094–8. Light-duty trucks must meet the Tier 0 hydrocarbon standard specified in 40 CFR 86.094–9. Otto-cycle heavy-duty engines must meet the hydrocarbon standard specified in 40 CFR 86.096–10. Diesel heavy-duty engines must meet the hydrocarbon standard in 40 CFR 86.096–11.

(b) CO, NO_X and particulate matter. Vehicles/engines must meet the CO, NO_X, and particulate matter emission standards that applied for the vehicle's/engine's original model year. If the engine was certified with a Family Emission Limit, as noted on the emission control information label, the modified engine may not exceed this Family Emission Limit.

(c) *Evaporative hydrocarbons.* Vehicles/engines must meet the evaporative hydrocarbon emission standards that applied for the vehicle's/engine's original model year.

§ 85.525 Applicable standards.

To qualify for an exemption from the tampering prohibition, vehicles/engines that have been converted to operate on a different fuel must meet emission standards and related requirements as described in this section. The modified vehicle/engine must meet the requirements that applied for the OEM vehicle/engine, or the most stringent OEM vehicle/engine standards in any allowable grouping. Fleet average standards do not apply unless clean alternative fuel conversions are specifically listed as subject to the standards.

(a) If the vehicle/engine was certified with a Family Emission Limit for NO_X, NO_X+HC, NO_X+NMOG, or particulate matter, as noted on the vehicle/engine emission control information label, the modified vehicle/engine may not exceed this Family Emission Limit.

(b) Compliance with greenhouse gas emission standards is demonstrated as follows:

(1) Subject to the following exceptions and special provisions, compliance with light-duty vehicle greenhouse gas emission standards is demonstrated by complying with the N_2O and CH_4 standards and provisions set forth in 40 CFR 86.1818–12(f)(1) and the in-use CO_2 exhaust emission standard set forth in 40 CFR 86.1818–12(d) as determined by the OEM for the subconfiguration that is identical to the fuel conversion emission data vehicle (EDV):

(i) If the OEM complied with the light-duty greenhouse gas standards using the fleet averaging option for N_2O and CH_4, as allowed under 40 CFR 86.1818–12(f)(2), the calculations of the carbon-related exhaust emissions require the input of grams/mile values for N_2O and CH_4, and you are not required to demonstrate compliance with the standalone CH_4 and N_2O standards.

(ii) If the OEM complied with alternate standards for N_2O and/or CH_4, as allowed under 40 CFR 86.1818–12(f)(3), you may demonstrate compliance with the same alternate standards.

(iii) If the OEM complied with the nitrous oxide (N_2O) and methane (CH_4) standards and provisions set forth in 40 CFR 86.1818–12(f)(1) or (3), and the fuel conversion CO_2 measured value is lower than the in-use CO_2 exhaust emission standard, you also have the option to convert the difference between the in-use CO_2 exhaust emission standard and the fuel conversion CO_2 measured value into GHG equivalents of CH_4 and/or N_2O, using 298 g CO_2 to represent 1 g N_2O and 25 g CO_2 to represent 1 g CH_4. You may then subtract the applicable converted values from the fuel conversion measured values of CH_4 and/or N_2O to demonstrate compliance with the CH_4 and/or N_2O standards.

(iv) Optionally, compliance with greenhouse gas emission requirements may be demonstrated by comparing emissions from the vehicle prior to the fuel conversion to the emissions after the fuel conversion. This comparison must be based on FTP test results from the emission data vehicle (EDV) representing the pre-conversion test group. The sum of CO_2, CH_4, and N_2O shall be calculated for pre- and post-conversion FTP test results, where CH_4 and N_2O are weighted by their global warming potentials of 25 and 298, respectively. The post-conversion sum of these emissions must be lower than the pre-conversion conversion greenhouse gas emission results. CO_2 emissions are calculated as specified in 40 CFR 600.113–12. If statements of compliance are applicable and accepted in lieu of measuring N_2O, as permitted by EPA regulation, the comparison of the greenhouse gas results also need not measure or include N_2O in the before and after emission comparisons.

(2) Compliance with heavy-duty engine greenhouse gas emission standards is demonstrated by complying with the CO_2, N_2O, and CH_4 standards (or FELs, as applicable) and provisions set forth in 40 CFR 1036.108 for the engine family that is represented by the fuel conversion emission data engine (EDE). The following additional provisions apply:

(i) If the fuel conversion CO_2 measured value is lower than the CO_2 standard (or FEL, as applicable), you have the option to convert the difference between the CO_2 standard (or FEL, as applicable) and the fuel conversion CO_2 measured value into GHG equivalents of CH_4 and/or N_2O, using 298 g/hp-hr CO_2 to represent 1 g/hp-hr N_2O. Similarly, you may use 34 g/hp-hr CO_2 to represent 1 g/hp-hr CH_4 for model year 2021 and later engines, and you may use 25 g/hp-hr CO_2 to represent 1 g/hp-hr CH_4 for earlier engines. You may then subtract the applicable converted values from the fuel conversion measured values of CH_4 and/or N_2O to demonstrate compliance with the CH_4 and/or N_2O standards (or FEL, as applicable).

(ii) Small volume conversion manufacturers may demonstrate compliance with N_2O standards based on an engineering analysis.

(iii) For conversions of engines installed in vocational vehicles subject to Phase 2 standards under 40 CFR 1037.105 or in tractors subject to Phase

2 standards under 40 CFR 1037.106, conversion manufacturers may omit a demonstration related to the vehicle-based standards, as long as they have a reasonable technical basis for believing that the modified vehicle continues to meet those standards.

(3) Subject to the following exceptions and special provisions, compliance with greenhouse gas emission standards for heavy-duty vehicles subject to 40 CFR 86.1819 is demonstrated by complying with the N_2O and CH_4 standards and provisions set forth in 40 CFR 86.1819 and the in-use CO_2 exhaust emission standard set forth in 40 CFR 86.1819–14(b) as determined by the OEM for the subconfiguration that is identical to the fuel conversion emission data vehicle (EDV):

(i) If the OEM complied with alternate standards for N_2O and/or CH_4, as allowed under 40 CFR 86.1819–14(c) you may demonstrate compliance with the same alternate standards.

(ii) If you are unable to meet either the N_2O or CH_4 standards and your fuel conversion CO_2 measured value is lower than the in-use CO_2 exhaust emission standard, you may also convert the difference between the in-use CO_2 exhaust emission standard and the fuel conversion CO_2 measured value into GHG equivalents of CH_4 and/or N_2O, using 298 g CO_2 to represent 1 g N_2O. Similarly, you may use 34 g CO_2 to represent 1 g CH_4.for model year 2021 and later vehicles, and you may use 25 g CO_2 to represent 1 g CH_4 for earlier vehicles. You may then subtract the applicable converted values from the fuel conversion measured values of CH_4 and/or N_2O to demonstrate compliance with the CH_4 and/or N_2O standards.

(iii) You may alternatively comply with the greenhouse gas emission requirements by comparing emissions from the vehicle before and after the fuel conversion. This comparison must be based on FTP test results from the emission data vehicle (EDV) representing the pre-conversion test group. The sum of CO_2, CH_4, and N_2O shall be calculated for pre- and post-conversion FTP test results, where CH_4 and N_2O are weighted by their global warming potentials as described in paragraph (b)(3)(ii) of this section. The post-conversion sum of these emissions must be lower than the pre-conversion greenhouse gas emission result. Calculate CO_2 emissions as specified in 40 CFR 600.113. If we waive N_2O measurement requirements based on a statement of compliance, disregard N_2O for all measurements and calculations under this paragraph (b)(3)(iii).

(c) Conversion systems for engines that would have qualified for chassis certification at the time of OEM certification may use those procedures, even if the OEM did not. Conversion manufacturers choosing this option must designate test groups using the appropriate criteria as described in this subpart and meet all vehicle chassis certification requirements set forth in 40 CFR part 86, subpart S.

[81 FR 73971, Oct. 25, 2016]

§ 85.530 Vehicle/engine labels and packaging labels.

(a) The following labeling requirements apply for clean alternative fuel conversion manufacturers to qualify for an exemption from the tampering prohibition:

(1) You must make a supplemental emission control information label for each clean alternative fuel conversion system.

(2) On the supplemental label you must identify the OEM vehicles/engines for which you authorize the use of your clean alternative fuel conversion system, consistent with the requirements of this subpart. You may do this by identifying the OEM test group/engine family names and original model year to which your conversion is applicable as described in § 85.510(b)(1) or § 85.510(b)(2), § 85.515(b)(10)(ii), or § 85.520(b)(6)(ii). Your commercial packaging materials must also clearly describe this information.

(3) You must include the following on the supplemental label:

(i) You must state that the vehicle/engine has been equipped with a clean alternative fuel conversion system designed to allow it to operate on a fuel other than the fuel it was originally certified to operate on. Identify the fuel or fuels the vehicle/engine is designed to use and provide a unique conversion test group/conversion engine

family name and conversion evaporative/refueling emissions family name.

(ii) You must identify your corporate name, address, and telephone number.

(iii) You must include one of the following statements that describes how you comply under this subpart and any applicable mileage or age restrictions due to how compliance was demonstrated:

(A) ''This clean alternative fuel conversion system has been certified to meet EPA emission standards.''

(B) ''Testing has shown that this clean alternative fuel conversion system meets EPA emission standards under the intermediate age vehicle/engine program.''

(C) ''This conversion system is for the purpose of use of a clean alternative fuel in accordance with EPA regulations and is applicable only to vehicles/engines that are older than 11 years or 120,000 miles.'' (Values must be adjusted to reflect OEM useful life; useful life in hours should be added, if applicable).

(iv) State the following: ''This conversion was manufactured and installed consistent with the principles of good engineering judgment and all U.S. EPA regulations.''

(4) On the supplemental label, you must identify any original parts that will be removed for the conversion and any associated changes in maintenance specifications.

(5) On the supplemental label, you must include the date of conversion and the mileage of the vehicle/engine at the time of conversion. Include the hours of operation instead of mileage, if applicable.

(b) The supplemental emission control information label shall be placed in a permanent manner adjacent to the vehicle's/engine's original emission control information label if possible. If it is impractical to place the supplemental label adjacent to the original label, it must be placed where it will be seen by a person viewing the original label on a part that is needed for normal operation and does not normally need replacement. If the supplemental label information cannot fit on one label, the information can be logically split among two labels that are both near the original VECI or engine label.

(c) All information provided on clean alternative fuel conversion system packaging must be consistent with the required vehicle/engine labeling information.

(d) Examples of all labeling and warranty information must be provided as part of the application for certification or notification process.

(e) The marketing material and label information for a given conversion system must be consistent with the conversion manufacturer's demonstration/notification to EPA for that system.

§ 85.535 Liability, recordkeeping, and end of year reporting.

(a) Clean alternative fuel conversion manufacturers are liable for in-use performance of their conversion systems as outlined in this part.

(b) We may conduct or require testing on any vehicles/engines as allowed under the Clean Air Act. This may involve confirmatory testing, in-use testing, and/or selective enforcement audits for clean alternative fuel conversion systems. Dual-fuel vehicles/engines may be tested when operating on any of the fuels. Mixed-fuel vehicles/engines may be tested on any fuel blend ratio that is expected to occur during normal operation.

(c) Except for an application for certification, your actions to document compliance and notify us under this subpart are not a request for our approval. We generally do not give any formal approval short of issuing a certificate of conformity. However, if we learn that your actions fall short of full compliance with applicable requirements we may notify you that you have not met applicable requirements or that we need more information to make that determination. The exemption from the tampering prohibition may be void ab initio if the conversion manufacturer has not satisfied all of the applicable provisions of this subpart even if a submission to EPA has been made and the conversion system appears on EPA's publicly available list of compliant systems.

(d) Clean alternative fuel conversion manufacturers must accept in-use liability for warranty, are subject to defect reporting requirements, and may be required to recall any parts or systems for which the failure can be traced to the conversion, regardless of whether installation was proper or improper. The OEM shall remain liable for the performance of any parts or systems which retain their original function following conversion and are unaffected by the conversion.

(e) Clean alternative fuel conversion manufacturers must keep sufficient records for five years from the date of notification or certification, or the date of the last conversion installation, whichever is later, to show that they meet applicable requirements.

(f) Clean alternative fuel conversion manufacturers must submit an end of the year sales report to EPA describing the number of clean alternative fuel conversions by fuel type(s) and vehicle test group/engine family by January 31 of the following year. The number of conversions is the sum of the calendar year intermediate age conversions, outside useful life conversions, and the same conversion model year certified clean alternative fuel conversions. The number of conversions will be added to any other vehicle and engine sales accounted for using 40 CFR 86.1838–01 or 40 CFR 86.098–14 as appropriate to determine small volume manufacturer or qualified small volume test group/engine family status.

(g) Conversion manufacturers who market conversion systems for use on vehicles/engines other than the test group/engine families and evaporative/refueling families covered by the compliance demonstration and notification may be liable for a tampering violation for each vehicle/engine to which conversion system is misapplied.

Subparts G–N [Reserved]

Subpart O—Urban Bus Rebuild Requirements

SOURCE: 58 FR 21386, Apr. 21, 1993, unless otherwise noted.

§ 85.1401 General applicability.

The requirements of this subpart shall be applicable to 1993 and earlier model year urban buses operating in consolidated metropolitan statistical areas and metropolitan statistical areas with a 1980 population of 750,000 or more that have their engines rebuilt or replaced after January 1, 1995.

§ 85.1402 Definitions.

The definitions of this section apply to this subpart.

Agency means the Environmental Protection Agency.

Certified equipment or *Retrofit/Rebuild Equipment* means equipment certified in accordance with the certification regulations contained in this subpart.

Emission related parts means those parts installed for the specific purpose of controlling emissions or those components, systems, or elements of design which must function properly to assure continued emission compliance.

Engine configuration means the set of components, tolerances, specifications, design parameters, and calibrations related to the emissions performance of the engine and specific to a subset of an engine family having a unique combination of displacement, fuel injection calibration, auxiliary emission control devices and emission control system components.

Engine rebuild means an activity, occurring over one or more maintenance events, involving:

(1) Disassembly of the engine including the removal of the cylinder head(s); and

(2) The replacement or reconditioning of more than one major cylinder component in more than half of the cylinders.

Engine replacement means the removal of an engine from the coach followed by the installation of another engine.

In-use compliance period for purposes of in-use testing means a period of 150,000 miles.

Maintenance event means a single maintenance activity for which the engine is removed from service. Once the engine is returned to service, the maintenance event is considered done.

Major cylinder component means piston assembly, cylinder liner, connecting rod, or piston ring set.

MOD Director means Director of Manufacturers Operations Division, Office of Mobile Sources—Office of Air and Radiation of the Environmental Protection Agency.

Office Director means the Director for the Office of Mobile Sources—Office of Air and Radiation of the Environmental Protection Agency or an authorized representative of the Office Director.

Operator means transit authority, state, city department, or private or public entity controlling the use of one or more urban buses.

Original engine configuration means the engine configuration at time of initial sale.

Original equipment part means a part present in or on an engine at the time an urban bus is originally sold to the ultimate purchaser.

Scheduled maintenance means those maintenance events required by the equipment certifier in order to ensure that the retrofitted engine will maintain its emissions performance over the in-use compliance period.

Urban bus has the meaning set forth in § 86.091–2 of this chapter.

Written instructions for proper maintenance and use means those maintenance and operation instructions specified in the warranty as being necessary to assure compliance of the retrofit/rebuild equipment with applicable emission standards for the in-use compliance period.

§ 85.1403 Particulate standard for pre-1994 model year urban buses effective at time of engine rebuild or engine replacement.

(a) Operators of urban buses in areas described in § 85.1401 shall be in compliance with one of the two programs described in paragraphs (b) and (c) of this section. An operator may switch between programs from year to year only if the operator has been in compliance with all the requirements of the newly chosen program at all times between January 1, 1995 and the date on which the operator chooses to switch programs.

(b) Program 1: Performance based requirement. Program 1 requires that affected urban buses meet a particulate standard of 0.10 g/bhp-hr effective at time of engine rebuild or replacement and thereafter. The requirement to meet the 0.10 g/bhp-hr standard is automatically waived if no equipment has been certified that meets the 0.10 g/bhp-hr standard and has a life cycle cost of $7,940 or less (in 1992 dollars) for the engine being rebuilt. Program 1 contains fallback requirements for engines for which the 0.10 g/bhp-hr standard is waived. Such urban bus engines must receive equipment that provides a 25 percent reduction in particulate emissions relative to the particulate level of the original engine configuration. This 25 percent reduction requirement is automatically waived if no equipment has been certified for the engine being rebuilt that provides a 25 percent reduction in particulate emissions and has a life cycle cost $2,000 or less (in 1992 dollars). In cases where equipment is not available to either meet a 0.10 g/bhp-hr standard for less than the applicable cost ceiling or achieve a 25 percent reduction for less than the applicable cost ceiling, the urban bus is required to be equipped with an engine rebuilt to the original engine configuration or a configuration certified to have a particulate level lower than that of the original engine configuration.

(1) Exhaust emissions from any urban bus for which this subpart is applicable shall not exceed a particulate standard of 0.10 grams per brake horsepower-hour (0.037 grams per megajoule) if equipment is available for the engine model of such urban bus at time of engine rebuild or engine replacement, as specified in paragraph (b)(1)(i) of this section.

(i) Equipment is available for a particular engine model if equipment has been certified to a particulate standard of 0.10 grams per brake horsepower-hour (0.037 grams per megajoule), and the equipment for the engine model has been approved for certification for six months or more, and has a life cycle cost as determined under paragraph (b)(1)(ii) of this section that does not

exceed the life cycle cost ceiling specified in paragraph (b)(1)(iii) of this section.

(ii) The life cycle cost of equipment is equal to the sum of the purchase price, the installation cost, the incremental fuel cost, the cost of any fuel additives required, and the incremental maintenance cost associated with the equipment each as defined in paragraphs (b)(1)(ii)(A) through (b)(1)(ii)(E) of this section minus an engine replacement credit as defined in paragraph (b)(1)(ii)(F) of this section if the equipment replaces an existing engine with a new engine.

(A) The purchase price is defined as the price at which the equipment (including all parts necessary to install and operate the equipment properly) is offered to the operator. The purchase price excludes reasonable shipping and handling fees and taxes, and equipment costs incurred by the urban bus operator for a standard rebuild.

(B)(*1*) The installation cost is defined as the labor cost of installing the equipment on an urban bus engine, incremental to a standard rebuild, based on a labor rate of $35 per hour. The installation cost is calculated using the following equation:

$$\text{Installation Cost} = \left(\begin{array}{c}\text{Incremental hours}\\ \text{for installation}\end{array}\right) \times \left(\frac{\$35}{\text{hour}}\right) \times \left(\frac{\text{CPI}_R}{\text{CPI}_{1992}}\right)$$

Where,

CPI_R is the most recent published Consumer Price Index at time of rebuild (for ''all items'' as published by the U.S. Bureau of Labor Statistics).

CPI_{1992} is the Consumer Price Index (for ''all items'' as published by the U.S. Bureau of Labor Statistics) for 1992.

(*2*) The estimated number of hours necessary to install the equipment will be determined as part of the equipment certification process, as detailed in § 85.1407.

(C) The incremental fuel cost is defined as the increased fuel costs or the fuel savings due to the use of the equipment. (By definition, fuel savings will be negative values.) The calculation of incremental fuel cost will depend on the type of equipment being installed.

(*1*)(*i*) For equipment not requiring a change from on road federal diesel fuel, the incremental fuel cost shall be calculated as follows:

$$\text{Incremental fuel cost} = \frac{\left(\begin{array}{c}\text{fuel economy}\\ \text{\% reduction}\end{array}\right) \times (129.104 \text{ miles})}{\dfrac{3.3 \text{ miles}}{\text{gallon}}} \times \left(\frac{\$0.72}{\text{gallon}}\right) \times \frac{\text{CPI}_R}{\text{CPI}_{1992}} S$$

Where,

CPI_R is the most recent published Consumer Price Index at time of rebuild (for ''all items'' as published by the U.S. Bureau of Labor Statistics).

CPI_{1992} is the Consumer Price Index (for ''all items'' as published by the U.S. Bureau of Labor Statistics) for 1992.

(*ii*) The percent change in fuel economy will be determined as part of the equipment certification process, as detailed in § 85.1407. If equipment causes the fuel economy of the engine to increase, the value of the fuel economy % reduction in the above equation shall be a negative value.

(*2*) For equipment requiring a fuel other than on-road federal diesel fuel, the incremental fuel cost shall be calculated as follows:

$$\text{Incremental fuel cost} = \begin{pmatrix} \text{Incremental} \\ \text{price at which} \\ \text{fuel is offered} \end{pmatrix} \times \begin{pmatrix} \text{Discounted} \\ \text{lifetime} \\ \text{miles} \end{pmatrix}$$

Where,

$$\text{Incremental price at which fuel is offered} = \begin{pmatrix} \text{Cost per mile} \\ \text{for} \\ \text{alternative fuel} \end{pmatrix} - \begin{pmatrix} \text{Cost per mile} \\ \text{for} \\ \text{diesel fuel} \end{pmatrix}$$

(*i*) For equipment/alternative fuel that is being certified under § 85.1407 as available to all affected operators for less than the life cycle cost ceiling, the discounted lifetime mileage is 129,104 miles. For equipment/alternative fuel that is not being certified under § 85.1407 as available to all affected operators for less than the life cycle cost ceiling, the discounted lifetime mileage is based on the age of the urban bus engine being rebuilt as specified in the following table:

Age of engine at time of rebuild	Discounted lifetime miles
5 Years	229,478
6 Years	204,881
7 Years	180,703
8 Years	155,902
9 Years	131,505
10 Years	109,680
11 Years	90,608
12 Years	70,200
13 Years	48,364
14 Years	25,000
15 or more Years	0

(*ii*) The cost per mile for diesel fuel is calculated based on the following equation:

$$\text{Cost per mile of diesel fuel} = \frac{\text{Price of diesel fuel per gallon, excluding taxes}}{\text{3.3 miles per gallon}}$$

(*iii*) For equipment/alternative fuel that is being certified under § 85.1407 as available to all affected operators for less than the life cycle cost ceiling, the price of diesel fuel per gallon, excluding taxes, is $\$0.72 \times (CPI_R/CPI_{1992})$. For equipment/alternative fuel that is not being certified under § 85.1407 as available to all affected operators for less than the life cycle cost ceiling, the price of diesel fuel per gallon, excluding taxes, is the price at which the operator currently purchases diesel fuel, excluding taxes.

(*iv*) The cost per mile for alternative fuels is calculated based on the following equation:

$$\text{Cost per mile for alternative fuel} = \frac{\begin{pmatrix}\text{Unit price of}\\ \text{alternative fuel,}\\ \text{excluding taxes}\end{pmatrix}}{\begin{pmatrix}\text{Fuel economy of}\\ \text{alternatively}\\ \text{fueled engine}\end{pmatrix}}$$

(*v*) In order for the equipment/alternative fuel to be required, the fuel supplier must provide a contract to the urban bus operator specifying the cost of the fuel for the life of the engine being retrofitted. The contract must specify the maximum incremental cost, compared to the cost of diesel fuel on a per mile basis, at which the fuel will be sold. As part of the contract, the fuel supplier must also provide on-site facilities, meeting all applicable safety and fire code requirements, for refueling the urban bus engines being retrofitted, unless the operator already has sufficient refueling facilities or the operator agrees to use off-site refueling facilities.

(*vi*) The fuel economy of the engine retrofitted with the equipment will be determined as part of the equipment certification process, as detailed in § 85.1407.

(D) For equipment requiring the use of a fuel additive, the fuel additive cost shall be calculated as follows:

$$\text{Fuel additive cost} = \frac{\begin{pmatrix}\text{Amount of fuel additive}\\ \text{required per gallon of fuel}\end{pmatrix} \times \begin{pmatrix}\text{Discounted}\\ \text{lifetime miles}\end{pmatrix}}{\text{(Fuel economy of engine)}} \times \begin{pmatrix}\text{Price of fuel additive}\\ \text{per gallon}\\ \text{of fuel additive}\end{pmatrix}$$

(*1*) For diesel-fueled engines, the fuel economy of the engine is 3.3 miles per gallon. For alternatively-fueled engines, the fuel economy of the engine shall be determined as part of the equipment certification process, as detailed in § 85.1407.

(*2*) For equipment/fuel additive that is being certified under § 85.1407 as available to all affected operators for less than the life cycle cost ceiling, the discounted lifetime mileage is 129,104 miles. For equipment/fuel additive that is not being certified under § 85.1407 as available to all affected operators for less than the life cycle cost ceiling, the discounted lifetime mileage is based on the age of the urban bus engine being rebuilt as specified in the following table:

Age of engine at time of rebuild	Discounted lifetime miles
5 Years	229,478
6 Years	204,881
7 Years	180,703
8 Years	155,902
9 Years	131,505
10 Years	109,680
11 Years	90,608
12 Years	70,200
13 Years	48,364
14 Years	25,000
15 or more Years	0

(*3*) The price of the fuel additive is the price at which the fuel additive supplier supplies the fuel additive to the urban bus operator. In order for the equipment/fuel additive to be required, the equipment/fuel additive supplier must provide a contract to the urban bus operator specifying the maximum

cost at which the fuel additive will be sold for the life of the engine being retrofitted.

(*4*) The amount of fuel additive required per gallon of diesel fuel will be determined as part of the equipment certification process, as detailed in § 85.1407.

(*E*) The incremental maintenance cost of the equipment is equal to the cost of the parts necessary for scheduled maintenance of the retrofit equipment incremental to cost of the parts necessary for maintenance of an original, non-retrofitted engine. The incremental maintenance cost will be determined as part of the equipment certification process, as detailed in § 85.1407.

(*F*) For equipment which replaces an existing urban bus engine with a new, previously unused engine, a credit will be applied to the life cycle cost. The engine replacement credit will be determined as follows:

$$\text{Engine Replacement Credit}_R = \$10{,}000 \times \left(\text{CPI}_R / \text{CPI}_{1992}\right)$$

Where,

CPI_R is the most recent published Consumer Price Index at time of rebuild (for ''all items'' as published by the U.S. Bureau of Labor Statistics).

$CP1_{1992}$ is the Consumer Price Index (for ''all items'' as published by the U.S. Bureau of Labor Statistics) for 1992.

(iii) The life cycle cost ceiling for complying with the 0.10 grams per brake horsepower-hour (0.037 grams per megajoule) particulate rebuild standard is calculated by the following equation at the time of rebuild:

$$\text{Life Cycle Cost Ceiling}_R = \$7{,}940 \times \left(\text{CPI}_R / \text{CPI}_{1992}\right)$$

Where,

CPI_R is the most recent published Consumer Price Index at time of rebuild (for ''all items'' as published by the U.S. Bureau of Labor Statistics).

CPI_{1992} is the Consumer Price Index (for ''all items'' as published by the U.S. Bureau of Labor Statistics) for 1992.

(2) If no equipment meets the provisions of paragraph (b)(1) of this section for a particular model of urban bus engine, then any urban bus for which this subpart is applicable shall use equipment that has been certified to achieve at least a 25 percent reduction in particulate emissions from the original certified particulate emission level of the urban bus engine model being rebuilt, if such equipment is available as specified in paragraph (b)(2)(i) of this section. If no certification data exists for the emission level of the original urban bus engine configuration as initially certified, then other test data collected over the heavy-duty engine Federal Test Procedure, or an approved alternative test procedure prescribed under § 85.1414, may be considered in determining the percent reduction.

(i) Equipment is available for a particular engine model if equipment has been certified to achieve at least a 25 percent reduction in particulate emissions from original levels, and the equipment for the engine model has been approved for certification for six months or more, and has a life cycle cost as determined under paragraph (b)(2)(ii) of this section that does not exceed the life cycle cost ceiling specified in paragraph (b)(2)(iii) of this section.

(ii) The life cycle cost of equipment is equal to the sum of the purchase price, the installation cost, the incremental fuel cost, the cost of any fuel additives required, and the incremental maintenance cost associated with the equipment each as defined in paragraphs (b)(2)(ii)(A) through (b)(2)(ii)(E) of this section minus an engine replacement credit as defined in paragraph (b)(2)(ii)(F) of this section if the

equipment replaces an existing engine with a new engine.

(A) The purchase price is defined as the price at which the equipment (including all parts necessary to install and operate the equipment properly) is offered to the operator. The purchase price excludes reasonable shipping and handling fees and taxes, and equipment costs incurred by the urban bus operator for a standard rebuild.

(B)(*1*) The installation cost is defined as the labor cost of installing the equipment on an urban bus engine, incremental to a standard rebuild, based on a labor rate of $35 per hour. The installation cost is calculated using the following equation:

$$\text{Installation Cost} = \begin{pmatrix} \text{Incremental hours} \\ \text{for installation} \end{pmatrix} \times \left(\frac{\$35}{\text{hour}} \right) \times \left(\frac{\text{CPI}_R}{\text{CPI}_{1992}} \right)$$

Where,

CPI_R is the most recent published Consumer Price Index at time of rebuild (for ''all items'' as published by the U.S. Bureau of Labor Statistics).

CPI_{1992} is the Consumer Price Index (for ''all items'' as published by the U.S. Bureau of Labor Statistics) for 1992.

(*2*) The estimated number of hours necessary to install the equipment will be determined as part of the equipment certification process, as detailed in § 85.1407.

(C) The incremental fuel cost is defined as the increased fuel costs or the fuel savings due to the use of the equipment. (By definition, fuel savings will be negative values.) The calculation of incremental fuel cost will depend on the type of equipment being installed.

(1)(i) For equipment not requiring a change from on road federal diesel fuel, the incremental fuel cost shall be calculated as follows:

$$\text{Incremental fuel cost} = \frac{\begin{pmatrix} \text{fuel economy} \\ \text{\% reduction} \end{pmatrix} \times (129{,}104 \text{ miles})}{\dfrac{3.3 \text{ miles}}{\text{gallon}}} \times \left(\frac{\$0.72}{\text{gallon}} \right) \times \frac{\text{CPI}_R}{\text{CPI}_{1992}}$$

Where,

CPI_R is the most recent published Consumer Price Index at time of rebuild (for ''all items'' as published by the U.S. Bureau of Labor Statistics).

CPI_{1992} is the Consumer Price Index (for ''all items'' as published by the U.S. Bureau of Labor Statistics) for 1992.

(*ii*) The percent change in fuel economy will be determined as part of the equipment certification process, as detailed in § 85.1407. If equipment causes the fuel economy of the engine to increase, the value of the fuel economy % reduction in the above equation shall be a negative value.

(*2*) For equipment requiring a fuel other than on road federal diesel fuel, the incremental fuel cost shall be calculated as follows:

$$\text{Incremental fuel cost} = \begin{pmatrix} \text{Incremental} \\ \text{price at which} \\ \text{fuel is offered} \end{pmatrix} \times \begin{pmatrix} \text{Discounted} \\ \text{lifetime} \\ \text{miles} \end{pmatrix}$$

Where,

$$\text{Incremental price at which fuel is offered} = \begin{pmatrix}\text{Cost per mile}\\ \text{for}\\ \text{alternative fuel}\end{pmatrix} - \begin{pmatrix}\text{Cost per mile}\\ \text{for}\\ \text{diesel fuel}\end{pmatrix}$$

(*i*) For equipment/alternative fuel that is being certified under § 85.1407 as available to all affected operators for less than the life cycle cost ceiling, the discounted lifetime mileage is 129,104 miles. For equipment/alternative fuel that is not being certified under § 85.1407 as available to all affected operators for less than the life cycle cost ceiling, the discounted lifetime mileage is based on the age of the urban bus engine being rebuilt as specified in the following table:

Age of engine at time of rebuild	Discounted lifetime miles
5 years	229,478
6 years	204,881
7 years	180,703
8 years	155,902
9 years	131,505
10 years	109,680
11 years	90,608
12 years	70,200
13 years	48,364
14 years	25,000
15 or more years	0

(*ii*) The cost per mile for diesel fuel is calculated based on the following equation:

$$\text{Cost per mile of diesel fuel} = \frac{\text{Price of diesel fuel per gallon, excluding taxes}}{\text{3.3 miles per gallon}}$$

(*iii*) For equipment/alternative fuel that is being certified under § 85.1407 as available to all affected operators for less than the life cycle cost ceiling, the price of diesel fuel per gallon, excluding taxes, is $\$0.72 \times (CPI_R/CPI_{1992})$. For equipment/alternative fuel that is not being certified under § 85.1407 as available to all affected operators for less than the life cycle cost ceiling, the price of diesel fuel per gallon, excluding taxes, is the price at which the operator currently purchases diesel fuel, excluding taxes.

(*iv*) The cost per mile for alternative fuels is calculated based on the following equation:

$$\text{Cost per mile for alternative fuel} = \frac{\begin{pmatrix}\text{Unit price of}\\ \text{alternative fuel,}\\ \text{excluding taxes}\end{pmatrix}}{\begin{pmatrix}\text{Fuel economy of}\\ \text{alternatively}\\ \text{fueled engine}\end{pmatrix}}$$

(*v*) In order for the equipment/alternative fuel to be required, the fuel supplier must provide a contract to the urban bus operator specifying the cost of the fuel for the life of the engine being retrofitted. The contract must

specify the incremental cost, compared to the cost of diesel fuel on a per mile basis, at which the fuel will be sold. As part of the contract, the fuel supplier must also provide on-site facilities, meeting all applicable safety and fire code requirements, for refueling, the urban bus engines being retrofitted, unless the operator already has sufficient refueling facilities or the operator agrees to use off-site refueling facilities. The fuel supplier must also provide for any modifications to existing facilities that are necessary due to the use of the equipment/alternative fuel to meet applicable safety and fire code requirements.

(*vi*) The fuel economy of the engine retrofitted with the equipment will be determined as part of the equipment certification process, as detailed in § 85.1407.

(D) For equipment requiring the use of a fuel additive, the fuel additive cost shall be calculated as follows:

$$\text{Fuel additive cost} = \frac{\left(\begin{array}{c}\text{Amount of fuel additive}\\ \text{required per gallon of fuel}\end{array}\right)\times\left(\begin{array}{c}\text{Discounted}\\ \text{lifetime miles}\end{array}\right)}{\text{(Fuel economy of engine)}} \times \left(\begin{array}{c}\text{Price of fuel additive}\\ \text{per gallon}\\ \text{of fuel additive}\end{array}\right)$$

(*1*) For diesel-fueled engines, the fuel economy of the engine is 3.3 miles per gallon. For alternatively-fueled engines, the fuel economy of the engine shall be determined as part of the equipment certification process, as detailed in § 85.1407.

(*2*) For equipment/fuel additive that is being certified under § 85.1407 as available to all affected operators for less than the life cycle cost ceiling, the discounted lifetime mileage is 129,104 miles. For equipment/fuel additive that is not being certified under § 85.1407 as available to all affected operators for less than the life cycle cost ceiling, the discounted lifetime mileage is based on the age of the urban bus engine being rebuilt as specified in the following table:

Age of engine at time of rebuild	Discounted lifetime miles
5 years	229,478
6 years	204,881
7 years	180,703
8 years	155,902
9 years	131,505
10 years	109,680
11 years	90,608
12 years	70,200
13 years	48,364
14 years	25,000
15 or more years	0

(*3*) The price of the fuel additive is the price at which the fuel additive supplier supplies the fuel additive to the urban bus operator. In order for the equipment/fuel additive to be required, the equipment/fuel additive supplier must provide a contract to the urban bus operator specifying the maximum cost at which the fuel additive will be sold for the life of the engine being retrofitted.

(*4*) The amount of fuel additive required per gallon of diesel fuel will be determined as part of the equipment certification process, as detailed in § 85.1407.

(E) The incremental maintenance cost of the equipment is equal to the cost of the parts necessary for scheduled maintenance of the retrofit equipment incremental to cost of the parts necessary for maintenance of an original, non-retrofitted engine. The incremental maintenance cost will be determined as part of the equipment certification process, as detailed in § 85.1407.

(F) For equipment which replaces an existing urban bus engine with a new, previously unused engine, a credit will be applied to the life cycle cost. The engine replacement credit will be determined as follows:

$$\text{Engine Replacement Credit}_R = \$10{,}000 \times \left(CPI_R / CPI_{1992}\right)$$

Where,

CPI_R is the most recent published Consumer Price Index at time of rebuild (for ''all items'' as published by the U.S. Bureau of Labor Statistics).

CPI_{1992} is the Consumer Price Index (for ''all items'' as published by the U.S. Bureau of Labor Statistics) for 1992.

(iii) The life cycle cost ceiling for complying with the 25 percent particulate emission reduction requirement is calculated by the following equation at the time of rebuild:

$$\text{Life Cycle Cost Ceiling}_R = \$2{,}000 \times \left(CPI_R / CPI_{1992}\right)$$

Where,

CPI_R is the most recent published Consumer Price Index at time of rebuild (for ''all items'' as published by the U.S. Bureau of Labor Statistics).

CPI_{1992} is the Consumer Price Index (for ''all items'' as published by the U.S. Bureau of Labor Statistics) for 1992.

(3)(i) Urban buses covered by this subpart for which no equipment is available under paragraphs (b)(1) or (b)(2) of this section shall be equipped with one of the following:

(A) The original engine rebuilt to its original engine configuration as specified in paragraph (b)(3)(ii) of this section; or

(B) An engine identical to its original engine which has been rebuilt to its original configuration as specified in paragraph (b)(3)(ii) of this section; or

(C) An engine of a configuration with a certification PM level lower than the original configuration; or

(D) A replacement engine with a particulate matter certification level lower than the original engine.

(ii) All replacement or rebuilt parts shall be equivalent to the original equipment specifications.

(4) Notwithstanding paragraph (b)(3) of this section, if as of July 1, 1996, no equipment has been certified to meet the cost ceiling requirements of paragraphs (b)(1) or (b)(2) of this section, then urban buses covered by this subpart shall be equipped with equipment that has been certified to achieve at least a 25 percent reduction in particulate emissions from the original certified particulate emission level of the urban bus engine model being rebuilt, provided the equipment does not require any of the following:

(i) A switch from mechanical control to electronic control; or

(ii) Installation of exhaust aftertreatment equipment; or

(iii) The use of a fuel different from the fuel on which the engine currently operates.

(c) Program 2: Averaging based program. Program 2 requires affected urban bus operators to meet an annual average fleet particulate emissions level, rather than requiring each individual rebuilt urban bus engine in the operator's fleet to meet a specific particulate emission level. Under Program 2, each affected fleet operator must reduce particulate emissions from its affected urban buses (i.e., 1993 and earlier model year urban buses) to a level low enough to meet an annual average target level for a fleet (TLF) for particulate emissions (in grams per brake horsepower-hour). The TLF is calculated for each year of the program beginning in 1996. During each calendar year, the average particulate emissions level from all of the operator's pre-1994 model year urban buses must be at or

below the TLF for that calendar year. The TLF for a particular calendar year is calculated based on the Agency's determination of the projected emission level for each engine model in the operator's pre-1994 model year urban bus fleet, as specified in paragraph (c)(1)(iii) of this section, and based on a schedule for rebuilding of affected urban bus engines, as specified in paragraph (c)(1)(iv) of this section.

(1) During each calendar year starting with 1996, urban bus operators shall be in compliance with an annual Target Level for a Fleet (TLF) of particulate emissions calculated using the equation defined in paragraph (c)(1)(i) of this section. Operators must comply with a TLF, rounded to two places after the decimal, until all pre-1994 urban buses have been retired from the operator's fleet.

(i) An urban bus operator's annual Target Level for a Fleet (TLF) for a particular calendar year shall be calculated as follows:

$$TLF_{CY} = \frac{\left(\sum_{MY=CY-15}^{1993} (B_{MY}) \times (WP_{MY})\right)}{\sum_{MY=CY-15}^{1993} (B_{MY})}$$

Where,

CY is the calendar year.

MY is the model year.

B_{MY} is the number of urban buses of that model year in the operator's fleet as of January 1, 1995, plus any urban buses of that model year added to the fleet after January 1, 1995.

WP_{MY} is the weighted average of projected particulate emissions for urban buses of that model year calculated using the formula in paragraph (c)(1)(ii) of this section.

(ii) The weighted average of projected particulate emissions for urban buses of a particular model year is calculated using the following equation:

$$WP_{MY} = \frac{\left(\sum_{1}^{z} (B_z) \times (P_z)\right)}{\sum_{1}^{z} (B_z)}$$

Where,

MY is the model year.

z is the number of different engine models in the fleet of model year MY.

B_z is the number of urban buses in the operator's fleet as of January 1, 1995 (including those added after January 1, 1995) equipped with a specific engine model of the given model year.

P_z is the projected particulate emission level of that engine model provided in paragraphs (c)(1)(iii) and (c)(1)(iv) of this section.

(iii)(A) Pre-rebuild particulate emission levels and projected post-rebuild particulate emission levels in grams per brake horsepower-hour (g/bhp-hr) are based on engine type and model year and are specified in the following table. The appropriate particulate level, pre-rebuild or post-rebuild, shall be determined using the information contained in paragraph (c)(1)(iv) of this section.

Engine model	Model year of engine	Pre-rebuild particulate level (g/bhp-hr)	Projected post-rebuild particulate level (g/bhp-hr)
DDC 6V92TA	1979–1987	0.50	0.30
	1988–1989	0.30	0.10
DDC 6V92TA DDECI	1986–1987	0.30	0.30
DDC 6V92TA DDECII	1988–1991	0.31	0.10
	1992	0.25	0.10
	1993 (no trap)	0.25	0.10
	1993 (trap)	0.07	0.07
DDC Series 50	1993	0.16	0.10
DDC 6V71N	1973–1987	0.50	0.50
	1988–1989	0.50	0.10
DDC 6V71T	1985–1986	0.50	0.50
DDC 8V71N	1973–1984	0.50	0.50
DDC 6L71TA	1990	0.59	0.10
	1988–1989	0.31	0.10
DDC 6L71TA DDEC	1990–1991	0.30	0.10
Cummins L10	1985–1987	0.65	0.65
	1988–1989	0.55	0.10
	1990–1991	0.46	0.10
Cummins L10 EC	1992	0.25	0.10
	1993 (trap)	0.05	0.05
Alternatively-fueled engines	Pre-1994	0.10	0.10
Other engines	Pre-1988	0.50	0.50
	1988–1993	(1)	0.10

[1] Certification level.

(B) For the TLF calculations as specified in paragraph (c)(1)(iv) of this section, post-rebuild particulate emissions levels for a specific engine model shall be equal to the following:

(*1*) 0.10 g/bhp-hr, for any engine model (other than any model year 1984 and 1987 engine models, and those engine models indicated in paragraph (c)(1)(iii)(B)(*4*) of this section) for which equipment has been certified by July 1, 1994 as meeting the emission and cost requirements of paragraph (b)(1) of this section for all affected urban bus operators;

(*2*) For any engine model for which no equipment has been certified by July 1, 1994 as meeting the requirements of paragraph (b)(1) of this section for all affected urban bus operators, (and for any model year 1984 and 1987 engine models) for which equipment has been certified by July 1, 1994 as meeting the emission and cost requirements of paragraph (b)(2) of this section for all affected urban bus operators, the post-rebuild particulate emission level shall equal the lowest emission level (greater than or equal to 0.10 g/bhp-hr) certified for any such equipment;

(*3*) For any engine model for which no equipment has been certified by July 1, 1994 as meeting the emission and cost requirements of paragraph (b)(1) or paragraph (b)(2) of this section for all affected urban bus operators, the post-rebuild particulate emission level shall equal the pre-rebuild particulate level;

(*4*) For any engine model with a pre-rebuild particulate level below 0.10 g/bhp-hr, the post-rebuild particulate emission level shall equal the pre-rebuild particulate level;

(*5*) Notwithstanding paragraph (c)(1)(iii)(C)(*3*) of this section, if by July 1, 1994, no equipment has been certified for any of the engine models listed in the table at paragraph (c)(1)(iii)(A) of this section, then the post-rebuild particulate levels shall be as indicated in the table at paragraph (c)(1)(iii)(A) of this section.

(C) For TLF calculations as specified in paragraph (c)(1)(iv) of this section, post-rebuild particulate emission levels for a specific engine model shall be equal to the following:

(*1*) 0.10 g/bhp-hr, for any engine model (other than those indicated in paragraph (c)(1)(iii)(C)(*4*) of this section) for which equipment has been certified by July 1, 1996 as meeting the emission and cost requirements of paragraph

(b)(1) of this section for all affected urban bus operators;

(*2*) For any engine model for which no equipment has been certified by July 1, 1996 as meeting the requirements of paragraph (b)(1) of this section for all affected urban bus operators, but for which equipment has been certified by July 1, 1996 as meeting the emission and cost requirements of paragraph (b)(2) of this section for all affected urban bus operators, the post-rebuild particulate emission level shall equal the lowest emission level (greater than or equal to 0.10 g/bhp-hr) certified for any such equipment;

(*3*) For any engine model for which no equipment has been certified by July 1, 1996 as meeting the requirements of either paragraph (b)(1) or paragraph (b)(2) of this section, the post-rebuild particulate emission level shall equal the pre-rebuild particulate level;

(*4*) For any engine model with a pre-rebuild particulate level below 0.10 g/bhp-hr, the post-rebuild particulate emission level shall equal the pre-rebuild particulate level;

(*5*) Notwithstanding paragraph (c)(1)(iii)(C)(*3*) of this section, if by July 1, 1996, no equipment has been certified to meet the emission requirements of paragraph (b)(1) or paragraph (b)(2) of this section for any of the engine models listed in the table at paragraph (c)(1)(iii)(A) of this section, then the post-rebuild particulate levels shall be the pre-rebuild particulate levels specified in the table at paragraph (c)(1)(iii)(A) of this section.

(D) For TLF calculations as specified in paragraph (c)(1)(iv) of this section, post-rebuild particulate emission levels for a specific engine model shall be equal to the following:

(*1*) 0.10 g/bhp-hr, for any engine model (other than those indicated in paragraph (c)(1)(iii)(D)(*4*) of this section) for which equipment has been certified by July 1, 1998 as meeting the emission and cost requirements of paragraph (b)(1) of this section for all affected urban bus operators;

(*2*) For any engine model for which no equipment has been certified by July 1, 1998 as meeting the requirements of paragraph (b)(1) of this section for all affected urban bus operators, but for which equipment has been certified by July 1, 1996 as meeting the emission and cost requirements of paragraph (b)(2) of this section for all affected urban bus operators, the post-rebuild particulate emission level shall equal the lowest emission level (greater than or equal to 0.10 g/bhp-hr) certified by July 1, 1998 for any such equipment;

(*3*) For any engine model for which no equipment has been certified by July 1, 1998 as meeting the emission and cost requirements of paragraph (b)(1) or (b)(2) of this section, the post-rebuild particulate emission level shall equal the pre-rebuild particulate level;

(*4*) For any engine model with a pre-rebuild particulate level below 0.10 g/bhp-hr, the post-rebuild particulate emission level shall equal the pre-rebuild particulate level;

(*5*) Notwithstanding paragraph (c)(1)(iii)(D)(*3*) of this section, if by July 1, 1998, no equipment has been certified to meet the emission requirements of paragraph (b)(1) or (b)(2) of this section for any of the engine models listed in the table at paragraph (c)(1)(iii)(A) of this section, then the post-rebuild particulate levels shall be the pre-rebuild particulate levels specified in the table at paragraph (c)(1)(iii)(A) of this section; and

(*6*) Notwithstanding paragraph (c)(1)(iii)(D)(*3*) of this section, if by July 1, 1998, equipment has been certified to meet the emissions requirements of paragraph (b)(1) or (b)(2) of this section for any of the engine models listed in the table at paragraph (c)(1)(iii)(A) of this section, but no equipment has been certified by July 1, 1998 to meet the life-cycle cost requirements of paragraph (b)(1) or (b)(2) of this section, then the post-rebuild particulate levels shall be as specified in the following table:

Engine model	Model year sold	Pre-rebuild PM level (g/bhp-hr)	Post-rebuild PM level (g/bhp-hr)
DDC 6V92TA	1979–1987	0.50	0.30
	1988–1989	.30	.30

Engine model	Model year sold	Pre-rebuild PM level (g/bhp-hr)	Post-rebuild PM level (g/bhp-hr)
DDC 6V92TA DDECI	1986–1987	.30	.30
DDC 6V92TA DDECII	1988–1991	.31	.25
	1992	.25	.25
	1993 (no trap)	.25	.25
	1993 (trap)	.07	.07
DDC Series 50	1993	.16	.16
DDC 6V71N	1973–1987	.50	.50
	1988–1989	.50	.50
DDC 6V71T	1985–1986	.50	.50
DDC 8V71N	1973–1984	.50	.50
DDC 6L71TA	1990	.59	.59
	1988–1989	.31	.31
DDC 6L71TA DDEC	1990–1991	.30	.30
Cummins L10	1985–1987	.65	.46
	1988–1989	.55	.46
	1990–1991	.46	.46
Cummins L10 EC	1992	.25	.25
	1993 (trap)	.05	.05
Alternatively-fueled Engines	Pre-1994	.10	.10
Other Engines	Pre-1988	.50	.50
	1988–1993	(1)	(1)

(1) New engine certification level.

(iv) To determine which particulate (PM) emission level from paragraph (c)(1)(iii) of this section is used for a particular model year engine in a fleet for the TLF of a given calendar year, use the following table:

Model year of engine	Year for which TLF is being calculated	Particulate emission level (see § 85.1403(c)(1)(iii))
1993	1996–1998	Pre-Rebuild Level.[1]
	1999–2001	Post-Rebuild Level.[3]
	2002–thereafter	Post-Rebuild Level.[4]
1992	1996–1998	Pre-Rebuild Level.[1]
	1999–2003	Post-Rebuild Level.[3]
	2004–thereafter	Post-Rebuild Level.[4]
1991	1996–1997	Pre-Rebuild Level.[1]
	1998–2002	Post-Rebuild Level.[3]
	2003–thereafter	Post-Rebuild Level.[4]
1990	1996–1999	Pre-Rebuild Level.[1]
	2000–thereafter	Post-Rebuild Level.[4]
1989	1996–1999	Pre-Rebuild Level.[1]
	2000–thereafter	Post-Rebuild Level.[4]
1988	1996–1998	Pre-Rebuild Level.[1]
	1999–thereafter	Post-Rebuild Level.[3]
1987	1996–1998	Post-Rebuild Level.[2]
	1999–thereafter	Post-Rebuild Level.[3]
1986	1996–1997	Pre-Rebuild Level.[1]
	1998–thereafter	Post-Rebuild Level.[3]
1985	1996	Pre-Rebuild Level.[1]
	1997–thereafter	Post-Rebuild Level.[2]
1984	1996–thereafter	Post-Rebuild Level.[2]
Pre-1984	1996–thereafter	Pre-Rebuild Level.[1]

[1] The pre-rebuild PM level established in paragraph (c)(1)(iii)(A) of this section.
[2] The post-rebuild PM level established pursuant to paragraph (c)(1)(iii)(B) of this section.
[3] The post-rebuild PM level established pursuant to paragraph (c)(1)(iii)(C) of this section.
[4] The post-rebuild PM level established pursuant to paragraph (c)(1)(iii)(D) of this section.

(2) To determine compliance under this program, the TLF, rounded to two places after the decimal, shall be compared with an annual Fleet Level Attained (FLA) of particulate emissions calculated using the equation defined in paragraph (c)(2)(i) of this section, and also rounded to two places after the decimal. At all times during a given calendar year, the FLA must be at or below the TLF for the same calendar year in order for the fleet to be in compliance.

(i) An urban bus operator shall calculate its Fleet Level Attained (FLA) using the following equation:

$$FLA = \frac{\left(\sum_{MY=MY_1}^{1993} (B_{MY}) \times (WE_{MY})\right)}{\left(\sum_{MY=MY_1}^{1993} B_{MY}\right) + B_R}$$

Where,

MY is the model year.

MY_1 is the model year of the oldest urban bus in an operator's fleet.

B_{MY} is the number of urban buses of model year MY in an operator's fleet, excluding those urban buses older than fifteen years that meet a 0.10 grams per brake horsepower-hour particulate standard.

B_R is the number of 1993 and earlier model year urban buses retired since January 1, 1995 that would have been less than 15 years old, as calculated by the model year of the urban bus on December 31st of the given calendar year, but does not include retired urban buses that are replaced by other 1993 and earlier model year urban buses.

WE_{MY} is the weighted average of engine-specific particulate emissions for urban buses in that model year in an operator's fleet, excluding those urban buses older than fifteen years that meet a 0.10 grams per brake horsepower-hour particulate standard, calculated using the formula in paragraph (c)(2)(ii) of this section.

(ii) The weighted average of engine specific particulate emissions for urban buses of a particular model year, excluding those urban buses older than fifteen years that meet a 0.10 grams per brake horsepower-hour particulate standard is calculated using the following equation:

$$WE_{MY} = \frac{\left(\sum_{1}^{q} (B_q) \times (E_q)\right)}{\sum_{1}^{q} (B_q)}$$

Where,

q is the number of different engine configurations in a given model year, excluding those urban buses older than fifteen years that meet a 0.10 grams per brake horsepower-hour particulate standard.

B_q is the number of urban buses with a specific engine configuration.

E_q is the engine-specific particulate emission level for a given configuration.

(iii) The E_q shall be defined as:

(A) The pre-rebuild level as specified in paragraph (c)(1)(iii) of this section in cases where an engine has not been rebuilt after January 1, 1995 or has been rebuilt to its original configuration; or

(B) The particulate emission level (in grams per brake horsepower-hour) achieved after installing emission control equipment on the urban bus at time of rebuild, where an engine has been rebuilt using emission control equipment after January 1, 1995. Such particulate emission levels will be established by the equipment certifier during equipment certification; or

(C) 0.10 grams per brake horsepower-hour (0.037 grams per megajoule) for urban buses covered by the provisions

specified in paragraph (d)(1) of this section; or

(D) The particulate emission level (in grams per brake horsepower-hour) of the upgrade engine configuration for urban buses covered by the provisions specified in paragraph (d)(3) of this section; or

(E) The particulate emission level (in grams per brake horsepower-hour) determined by applying an additional percent reduction in particulate emissions to the particulate levels determined in paragraphs (c)(2)(iii)(A) through (c)(2)(iii)(D) of this section for those urban buses operating on diesel-based fuels which achieve particulate reductions beyond federally required diesel fuel with 0.05 weight percent sulfur content. Such additional percent reductions will be determined through certification of such diesel-based fuels as specified in § 85.1407.

(d)(1) Operators of urban buses covered by this subpart which have had particulate traps installed prior to January 1, 1995, or are powered by an alternative fuel that significantly reduces particulate emissions compared to emissions from diesel fuel, may assume that such urban buses are operating at a PM level of 0.10 grams per brake horsepower-hour (0.037 grams per megajoule) for purposes of meeting the requirements set forth in paragraphs (b) and (c) of this section as long as such urban buses have engines that are properly calibrated and maintained in accordance with equipment manuals and instructions, and the operator has no reason to believe otherwise.

(2) Any urban buses which have had particulate traps installed prior to January 1, 1995, or are powered by a fuel that significantly reduces particulate emissions compared to emissions from diesel fuel, whose engines have not been properly calibrated and maintained in accordance with equipment manuals and instructions or the operator has reason to believe otherwise, shall be treated as if such equipment was not installed for purposes of determining compliance with paragraphs (b) and (c) of this section.

(3) Operators of urban buses covered by this subpart which have upgrade kits installed prior to January 1, 1995, may assume that such urban buses are operating at the PM level of the upgraded engine configuration for purposes of meeting the requirements set forth in paragraphs (b) and (c) of this section.

(e)(1) The standard and percent emission reductions requirements set forth in paragraphs (b) and (c) of this section refer to exhaust emitted over the operating schedule set forth in paragraph (f)(2) of appendix I to part 86 of this chapter and measured and calculated in accordance with the procedures set forth in subpart N of part 86 of this chapter.

(2) Equipment certifiers may also submit emission results from EPA-approved alternative test procedures showing compliance with the 25 percent reduction requirements of paragraphs (b) and (c) of this section. As required in § 85.1414, the equipment certifier shall supply information on the alternative test procedure which supports the certifier's claims that the alternative test procedure is typical of in-use urban bus operation.

(f) Every operator subject to the requirements prescribed in this section shall keep records of all engine rebuilds and replacements performed on urban buses as required in § 85.1404, and maintain evidence that their urban buses are in compliance with the requirements of paragraphs (b) or (c) of this section.

(g) Operators shall affix the label provided with the equipment, required under § 85.1411(a), to the engine being rebuilt with the equipment.

[58 FR 21386, Apr. 21, 1993, as amended at 63 FR 14635, Mar. 26, 1998]

§ 85.1404 Maintenance of records for urban bus operators; submittal of information; right of entry.

(a) The operator of any urban bus for which this subpart is applicable shall maintain and retain the following adequately organized and indexed records beginning January 1, 1995. Each operator shall keep such records until the five year anniversary of a rebuild or until the engine is rebuilt again, whichever occurs first.

(1) *General records.* The records required to be maintained under this paragraph shall consist of all purchase records, receipts, and part numbers for

parts and components used in the rebuilding of urban bus engines.

(2) *Individual records.* A brief history of each urban bus subject to the rebuild provisions prescribed under this section including the records and documentation required to be maintained under § 85.1403(f) of this subpart.

(3) *Fuel purchase records.* The records required under this paragraph consist of all purchase records of fuels for which the operator is claiming additional emission reductions under § 85.1403(c)(2)(iii)(E), purchase records for fuel additives required for use with equipment, and purchase records for fuels, other than diesel fuel, which are used with dual-fueled engines.

(b)(1) Any operator subject to the requirements under this section shall provide any EPA Enforcement Officer, upon presentation of credentials during operating hours, access to the following:

(i) Any facility where records required to be maintained under this section are generated or stored.

(ii) Any facility where engine rebuilding or replacement takes place.

(2) Upon admission to any facility referred to in paragraph (b)(1) of this section, any EPA Enforcement Officer shall be allowed:

(i) To inspect and make copies of records required to be maintained under this section.

(ii) To inspect and photograph any urban bus and engine subject to the standards set forth in § 85.1403 of this subpart.

(iii) To inspect and monitor any activity related to the rebuilding or replacement of an engine in an urban bus for which these regulations are applicable as described in § 85.1401 of this subpart.

§ 85.1405 Applicability.

The provisions of §§ 85.1405 through 85.1414 apply to retrofit/rebuild equipment which is to be installed on or used with 1993 and earlier model year urban buses whose engines are rebuilt or replaced after January 1, 1995. For the purposes of §§ 85.1405 through 85.1414, ''equipment'' includes alternative fuels and fuel additives to be used with urban bus engines.

§ 85.1406 Certification.

(a) Certification compliance shall be demonstrated as follows:

(1) *Test procedure and emission results.* The emission test to be used is the heavy-duty engine Federal Test Procedure as set forth in the applicable portions of part 86 of this chapter or an approved alternative test procedure prescribed under § 85.1414. Certification emission testing must be carried out using representative production equipment as provided in paragraph (b) of this section. The test results must demonstrate that the retrofit/rebuild equipment will comply with either the particulate emission requirements of §§ 85.1403(b)(1)(i) or 85.1403(b)(2)(i), or provide some level of particulate emission reduction, and will not cause the urban bus engine to fail to meet any applicable Federal emission requirements set for that engine in the applicable portions of 40 CFR part 86, provided the equipment is properly installed.

(2) *Emission test engine selection.* (i) The test engine used must represent the ''worst case'' with respect to particulate emissions of all those engine configurations for which the retrofit/rebuild equipment is being certified. The worst case engine configuration shall be the engine configuration having the highest engine-out particulate matter emission levels, when properly maintained and used, prior to installation of the retrofit/rebuild equipment. EPA reserves the right to request data or information showing that the particulate emission reduction efficiency of the retrofit/rebuild equipment being certified under this paragraph, for use with more than one engine family, does not vary significantly among the engine families.

(ii) The results of certification tests using the worst case engine selections made in this section shall be applicable for the other engine configurations for which the retrofit/rebuild equipment is designed.

(iii) The worst case test engine selected for certification emission testing is not required to meet Federal emission standards before the retrofit/rebuild equipment is installed. However, each test engine shall have representative emissions performance that

is close to the standards and have no obvious or suspected emission defects. Each test engine shall be tuned properly and set to the engine manufacturer's specifications before testing is performed. Any excessively worn or malfunctioning emission related part shall be repaired or replaced with a new part prior to testing.

(iv) To demonstrate compliance with the particulate emission requirements of § 85.1403(b)(1)(i), the test engine used may be a new unused engine, an in-use engine that has been rebuilt previously, or an in-use engine that has not been rebuilt previously.

(v) (A) To demonstrate compliance with the particulate emission requirements of § 85.1403(b)(2)(i) on engines for which particulate certification data exists, the test engine used may be a new unused engine, an in-use engine that has been rebuilt previously, or an in-use engine that has not been rebuilt previously.

(B) To demonstrate compliance with the particulate emission requirements of § 85.1403(b)(2)(i) on engines for which no particulate certification data exists, the test engine used may be a new unused engine, or an in-use engine that is newly rebuilt to its original configuration.

(b) *Diesel test fuel.* Federally required low sulfur diesel fuel (with a sulfur content of 0.05 weight percent) shall be used for all new emissions testing required to be performed for certification of retrofit/rebuild equipment for diesel-fueled urban bus engines.

(c) *Test equipment selection.* Certification shall be based upon tests utilizing representative production equipment selected in a random manner.

(d) Replacing original equipment parts. Installation of any certified retrofit/rebuild equipment shall not result in the permanent removal or rendering inoperative of any original equipment emission related part other than the part(s) being replaced. Furthermore, installation of any certified retrofit/rebuild equipment shall not cause or contribute to an unreasonable risk to the public health, welfare or safety, or result in any additional range of parameter adjustability or accessibility to adjustment than that of the vehicle manufacturer's emission related part.

(e) *Affects on engine on-board diagnostic system.* Installation of any certified retrofit/rebuild equipment shall not alter or render inoperative any feature of the on-board diagnostic system incorporated by the engine manufacturer. The certified equipment may integrate with the existing diagnostic system if it does not alter or render inoperative any features of the system.

(f) *In-use enforcement.* (1) As a condition of certification, the equipment certifier agrees to notify operators who have installed this equipment and repair the equipment without cost to the operator when the Agency determines that a substantial number of the equipment kits, when properly maintained and used, and in actual use throughout the in-use compliance period, do not meet emission requirements.

(2) If the equipment certifier disagrees with such determination of nonconformity and so advises the Agency, the Administrator shall afford the equipment certifier and other interested persons an opportunity to present their views and evidence in support thereof at a public hearing conducted in accordance with procedures found in 40 CFR part 1068, subpart G.

[58 FR 21386, Apr. 21, 1993, as amended at 81 FR 73972, Oct. 25, 2016]

§ 85.1407 Notification of intent to certify.

(a) Prior to the sale of any certified retrofit/rebuild equipment, notification of the intent to certify must be approved by the MOD Director.

(1) All notifications shall include:

(i) Identification of the candidate retrofit/rebuild equipment to be certified, including a list of parts and part numbers;

(ii) Identification of all engine configurations for which the equipment is being certified including make(s), engine model(s), model year(s), engine size(s) and all other specific configuration characteristics necessary to assure that the equipment will not be installed in any configuration for which it has not been certified;

(iii) All results and documentation of tests and procedures used by the equipment certifier as evidence of compliance with the emission requirements specified in § 85.1406;

(iv) A description of the test equipment selection criteria used, and a statement that the test equipment used for certification testing is representative production equipment consistent with § 85.1406(c);

(v) A description of the test engine selection criteria used, and rationale that supports the technical judgment of the equipment certifier that the engine configuration used for certification testing represents worst case with respect to particulate matter emissions of all those configurations for which the retrofit/rebuild equipment is being certified, and all data that supports that conclusion;

(vi) A copy of the written instructions for proper maintenance and use of the equipment, including instructions as to whether the engine must be rebuilt to its original configuration before installing the equipment;

(vii) The scheduled maintenance required for the equipment over the in-use compliance period, including service intervals of the retrofit/rebuild equipment which detail the maintenance and replacement intervals in months and/or miles, as applicable;

(viii) A copy of the warranty language to be provided to the operator pursuant to both §§ 85.1409(a) and 85.1409(b);

(ix) A statement of commitment and willingness to comply with all the relevant terms and conditions of this subpart;

(x) A statement by the equipment certifier that use of its certified equipment will not cause a substantial increase to urban bus engine emissions in any normal driving mode not represented during certification testing; and

(xi) The office or officer of the equipment certifier authorized to receive correspondence regarding certification requirements pursuant to this subpart.

(2) If an equipment certifier wishes to certify equipment for use under § 85.1403(b) for all affected urban bus operators as specified in § 85.1401, the notification shall also contain all data and documentation used by the equipment certifier as evidence of compliance with the life cycle cost requirements specified in § 85.1403(b)(1)(ii) or § 85.1403(b)(2)(ii); including:

(i) The price to be charged to an urban bus operator for the equipment, excluding shipping and handling costs and taxes;

(ii) A detailed breakout of the total number of hours necessary to install the equipment, and the number of hours necessary to install the equipment, incremental to a standard rebuild;

(iii) For equipment not requiring a change from on road diesel fuel, the percent change in fuel economy for an urban bus engine retrofitted with the equipment compared to the original engine based on testing performed over the heavy-duty engine Federal test procedure or an approved alternative test procedure prescribed under § 85.1414, including all test data supporting the reported change in fuel economy;

(iv) For alternatively-fueled equipment, the fuel economy of the retrofitted engine based on testing performed over an approved test procedure prescribed under § 85.1414, including all test data supporting the reported fuel economy, and the unit price of the alternative fuel that will be charged to all affected urban bus operators;

(v) For equipment requiring a fuel additive, the amount of fuel additive required per gallon of fuel and the unit price of the fuel additive that will be charged to all affected urban bus operators; and

(vi) A list of the scheduled maintenance for an engine with the retrofit, and a detailed breakdown of the cost of the parts necessary to perform scheduled maintenance, incremental to the cost of the parts necessary for maintenance typically performed on an engine without the equipment.

(3) If an equipment certifier wishes to certify equipment for use under § 85.1403(b), but not for use by all affected urban bus operators as specified in § 85.1401, the notification shall, in addition to the data and documentation specified in paragraph (a)(1) of this section, also contain data and documentation that demonstrate compliance with

the life cycle cost requirements specified in § 85.1403(b)(1)(ii) or § 85.1403(b)(2)(ii) including:

(i) A detailed breakout of the total number of hours necessary to install the equipment, and the number of hours necessary to install the equipment, incremental to a standard rebuild;

(ii) The percent change in fuel economy for an urban bus engine retrofitted with the equipment compared to the original engine based on testing performed over the heavy-duty engine Federal test procedure or an approved alternative test procedure prescribed under § 85.1414, including all test data supporting the reported change in fuel economy;

(iii) A list of the scheduled maintenance for an engine with the retrofit, and a detailed breakdown of the cost of the scheduled maintenance, incremental to the cost of maintenance typically performed on an engine without the equipment;

(iv) For alternatively-fueled equipment, the fuel economy of the retrofitted engine based on testing performed over an approved test procedure prescribed under § 85.1414, including all test data supporting the reported fuel economy;

(v) For equipment requiring a fuel additive, the amount of fuel additive required per gallon of fuel; and

(vi) A description of the type of urban bus operator to which the equipment certifier expects to sell the equipment for less than the life cycle cost requirements specified in § 85.1403(b)(1)(ii) or § 85.1403(b)(2)(ii).

(4) The notification shall be signed by an officer of the equipment certifier attesting to the accuracy and completeness of the information supplied in the notification.

(5) Notification to the Agency shall be by certified mail or another method by which date of receipt can be established.

(6) Two complete and identical copies of the notification and any subsequent industry comments on any such notification shall be submitted by the equipment certifier to: MOD Director, MOD (6405J), Attention: Retrofit/Rebuild Equipment, 401 ''M'' Street SW., Washington, DC 20460.

(7) A copy of the notification submitted under paragraph (a)(6) of this section will be placed in a public docket and a summary will be published in the FEDERAL REGISTER. Any party interested in the outcome of the decision as to whether retrofit/rebuild equipment may be certified, may submit comments to the MOD Director on any notice in the public docket for 45 days after the summary of the notification of intent to certify has been published in the FEDERAL REGISTER.

(b)(1) For an urban bus operator to take credit for additional particulate emission reductions for use of a clean diesel fuel under § 85.1403(c)(2)(iii)(E), the following information must be submitted to the Agency:

(i) The additional percent reduction in particulate emissions for engines operated on the clean diesel fuel.

(A) The additional percent reduction in particulate emissions shall be calculated based on the results of emission tests performed on urban bus engines using federally required low sulfur fuel and the fuel for which the certifier is demonstrating addition emission reductions.

(B) The additional percent reduction in particulate emissions shall be calculated based on the following equation:

$$\text{Percent reduction of particulate emissions} = \frac{\begin{pmatrix}\text{Particulate emissions}\\ \text{for engines operated}\\ \text{on Federally required}\\ \text{low sulfur fuel}\end{pmatrix} - \begin{pmatrix}\text{Particulate emissions}\\ \text{for engines operated}\\ \text{on clean diesel fuel}\end{pmatrix}}{\begin{pmatrix}\text{Particulate emissions}\\ \text{for engines operated}\\ \text{on Federally required}\\ \text{low sulfur fuel}\end{pmatrix}}$$

(ii) The emission testing results for hydrocarbons, carbon monoxide, and oxides of nitrogen. The results must show that use of the clean diesel fuel does not lead to increases in any of these emissions.

(2) Emission test results must be submitted for all of the engine models for which an urban bus operator wishes to claim additional particulate emission reductions.

(3) Emissions test results shall be measured over the heavy-duty engine Federal test procedure or an approved alternative test procedure prescribed under § 85.1414.

(c) The MOD Director reserves the right to review an application to determine if the submitted documents adequately meet all the requirements for certification specified in §§ 85.1406 and 85.1407. The MOD Director shall determine and will publish in the FEDERAL REGISTER the effective date of certification of the candidate equipment. Equipment may be sold as certified after the effective date of certification.

EFFECTIVE DATE NOTE: At 58 FR 21386, Apr. 21, 1993, § 85.1407 was added. This section contains information collection and recordkeeping requirements that will not become effective until approval has been given by the Office of Management and Budget.

§ 85.1408 Objections to certification.

(a) At any time prior to certification, the MOD Director may notify the equipment certifier that such equipment shall not be certified pending further investigation. The basis upon which this notification shall be made may include, but not be limited to, information or test results submitted by the equipment certifier, or public comments submitted on the equipment which indicate:

(1) The test procedure used to demonstrate compliance with the particulate matter emission standard or percent reduction of § 85.1403 was not in compliance with the heavy-duty engine Federal Test Procedure of 40 CFR part 86 or an alternative test procedure approved by the Agency under § 85.1414; or

(2) Use of the candidate equipment may cause an urban bus engine to exceed any applicable emission requirements; or

(3) Use of the candidate equipment could cause or contribute to an unreasonable risk to public health, welfare or safety in its operation or function; or

(4) Installation of the candidate equipment requires procedures or materials which would likely cause such equipment to be improperly installed under normal conditions or would likely result in an urban bus engine being misadjusted; or

(5) Information and/or data required to be in the notification of intent to certify as provided by § 85.1407 have not been provided or may be inadequate; or

(6) The life cycle cost estimates provided by the equipment certifier do not accurately reflect the true life cycle costs for the candidate equipment.

(b) The equipment certifier must respond in writing to the statements made in the notification by the MOD Director, or the MOD Director shall withdraw the equipment certifier's notification of intent to certify. A copy of the certifier's response will be placed in the public docket.

(1) Any party interested in the outcome of a decision as to whether retrofit/rebuild equipment may be certified may provide the MOD Director with any relevant written information up to ten days after the certifier responds to the MOD Director's objection.

(2) Any interested party may request additional time to respond to the information submitted by the equipment certifier. The MOD Director upon a showing of good cause by the interested party may grant an extension of time to reply up to 30 days.

(3) The equipment certifier may reply to information submitted by interested parties. Notification of intent to reply shall be submitted to the MOD Director within 10 days of the date information from interested parties is submitted to the MOD Director.

(4) The MOD Director may, at his or her discretion, allow oral presentations by the equipment certifier or any interested party in connection with contested equipment certification.

(c) If notification has been provided to an equipment certifier pursuant to paragraph (a) of this section, the MOD Director shall, after reviewing all pertinent data and information, render a decision and inform the equipment certifier in writing as to whether such equipment may be certified and, if so, under what conditions the equipment may be certified. The written decision shall include an explanation of the reasons therefor.

(1) The decision by the MOD Director shall be provided to the certifier after receipt of all necessary information by the certifier or interested parties, or of the date of any oral presentation regarding the certification, whichever occurs second.

(2) A copy of the decision shall be sent to all interested parties identified in paragraphs (b)(3) and (b)(4) of this section.

(3) Within 20 days of receipt of a decision made pursuant to paragraph (c) of this section, any party may file a written appeal to the Office Director. The Office Director may, in his or her discretion, allow additional oral or written submissions, prior to rendering a final decision. The schedule for such submission shall be in accordance with the schedule specified in § 85.1408(b).

(4) If no party files an appeal with the Office Director within 20 days, then the decision of the MOD Director shall be final.

(5) The Office Director shall make a final decision regarding the certification of equipment after receipt of all necessary information by the equipment certifier or from the date of any oral presentation, whichever occurs later.

(6) A copy of all final decisions made under this section shall be published in the FEDERAL REGISTER.

§ 85.1409 Warranty.

(a) As a condition of certification, the retrofit/rebuild equipment certifier shall warrant that if the certified equipment is properly installed and maintained as stated in the written instructions for proper maintenance and use, the equipment will not cause an urban bus engine to exceed the emission requirements of this subpart and the emission standards set forth in 40 CFR part 86. This retrofit/rebuild equipment warranty shall extend for a period of 150,000 miles from when the equipment is installed.

(b) As a condition of certification, the retrofit/rebuild equipment certifier shall provide an emissions defect warranty that if the certified equipment is properly installed and maintained as stated in the written instructions for proper maintenance and use, the equipment certifier will replace all defective parts, free of charge. This emissions defect warranty shall extend for a period of 100,000 miles from when the equipment is installed.

§ 85.1410 Changes after certification.

The equipment certifier shall recertify any retrofit/rebuild equipment which was certified pursuant to § 85.1406 and to which modifications are made affect emissions or the capability of the equipment to meet any other requirement of this subpart.

§ 85.1411 Labeling requirements.

(a) All retrofit/rebuild equipment certified pursuant to this subpart shall contain a label that shall be affixed to

the rebuilt engine which states, ''Certified to EPA Urban Bus Engine Rebuild Standards,'' the model and serial number of the equipment, the particulate emissions certification level of the equipment, and the name of the equipment certifier or other party designated to determine the validity of warranty claims. The label containing the information must be made durable and readable for at least the in-use compliance period of the equipment.

(b) The package in which the certified retrofit/rebuild equipment is contained, or an insert as described in paragraph (c) of this section, must have the following information conspicuously placed thereon:

(1) The statement ''Certified by (name of certifier or warranter) to EPA Urban Bus Engine Rebuild Emission Standards''; and

(2) A list of the vehicles or engines (in accordance with § 85.1407(a)(1)(ii)) for which the equipment is certified, unless such information is provided as specified in paragraph (d) of this section.

(c) The package in which the certified retrofit/rebuild equipment is contained must include the following information provided on a written insert:

(1) A list of the vehicles or engines (in accordance with § 85.1407(a)(1)(ii)) for which the equipment is certified, unless such information is provided as specified in paragraph (d) of this section;

(2) A list of all of the parts and identification numbers for the parts included in the package;

(3) The instructions for proper installation of the equipment;

(4) A statement of the maintenance or replacement interval for which the retrofit/rebuild equipment is certified; and

(5) A description of the maintenance necessary to be performed on the retrofit/rebuild equipment in the proper maintenance and use of the equipment.

(d) The information required by paragraphs (b)(2) and (c)(1) of this section may be provided in a catalog rather than on the package or on an insert, provided that access to the catalog is readily available to purchasers and installers of the equipment.

(e) When an equipment certifier desires to certify existing in-service stocks of its products, it may do so provided:

(1) The equipment does not differ in any operational or durability characteristic from the equipment specified in the notification made pursuant to § 85.1407; and

(2) An information sheet is made available to all parties selling the equipment.

(i) The information sheet shall be provided with all equipment sold as certified; and

(ii) The information sheet shall contain all of the information specified in paragraph (b) of this section.

EFFECTIVE DATE NOTE: At 58 FR 21386, Apr. 21, 1993, § 85.1411 was added. This section contains information collection and recordkeeping requirements that will not become effective until approval has been given by the Office of Management and Budget.

§ 85.1412 Maintenance and submittal of records for equipment certifiers.

(a) For each certified retrofit/rebuild equipment, the equipment certifier must establish, maintain and retain for 5 years from the date of certification the following adequately organized and indexed records:

(1) Detailed production drawings showing all dimensions, tolerances, performance requirements and material specifications and any other information necessary to completely describe the equipment;

(2) All data obtained during testing of the equipment and subsequent analyses based on that data, including the mileage and the vehicle or engine configuration determinants;

(3) All information used in determining those vehicles or engine for which the equipment is represented as being equivalent from an emissions standpoint to the original equipment being replaced;

(4) A description of the quality control plan used to monitor production and assure compliance of the equipment with the applicable certification requirements;

(5) All data taken in implementing the quality control plan, and any subsequent analyses of that data; and

(6) All in-service data, analyses performed by the equipment certifier and correspondence with vendors, distributors, consumers, retail outlets or engine manufacturers regarding any design, production or in-service problems associated with 25 or more pieces of any certified equipment.

(b) The records required to be maintained in paragraph (a) of this section shall be made available to the Agency upon the written request of the MOD Director.

(c) If the equipment certifier is selling equipment that is not certified as available to all affected urban bus operators under § 85.1403(b) and § 85.1407, then the equipment certifier shall submit to EPA, at the time an offer is made, a copy of all offers made to affected urban bus operators for which the equipment certifier has offered to sell its certified equipment for less than the life cycle cost limits specified in § 85.1403(b)(1)(iii) or § 85.1403(b)(2)(iii). The equipment certifier may assert that some of the information is entitled to confidential treatment as provided in § 85.1414.

EFFECTIVE DATE NOTE: At 58 FR 21386, Apr. 21, 1993, § 85.1412 was added. This section contains information collection and recordkeeping requirements that will not become effective until approval has been given by the Office of Management and Budget.

§ 85.1413 Decertification.

(a) The MOD Director may notify an equipment certifier that the Agency has made a preliminary determination that certain retrofit/rebuild equipment should be decertified.

(1) Such a preliminary determination may be made if there is reason to believe that the equipment manufactured has failed to comply with §§ 85.1405 through 85.1414. Information upon which such a determination will be made includes but is not limited to the following:

(i) The equipment was certified on the basis of emission tests, and the procedures used in such tests were not in substantial compliance with a portion or portions of the heavy-duty engine Federal Test Procedure contained in 40 CFR part 86 or an alternative test prescribed under 40 CFR 85.1414; or

(ii) Use of the certified equipment is causing urban bus engine emissions to exceed emission requirements for any regulated pollutant; or

(iii) Use of the certified equipment causes or contributes to an unreasonable risk to public health, welfare or safety or severely degrades driveability operation or function; or

(iv) The equipment has been modified in a manner requiring recertification pursuant to § 85.1410; or

(v) The certifier of such equipment has not established, maintained or retained the records required pursuant to § 85.1412 or fails to make the records available to the MOD Director upon written request pursuant to § 85.1412; or

(vi) The life cycle cost of the equipment exceeds the limits specified in § 85.1403(b)(1)(iii) or § 85.1403(b)(2)(iii).

(2) Notice of a preliminary determination to decertify shall contain:

(i) A description of the noncomplying equipment;

(ii) The basis for the MOD Director's preliminary decision; and

(iii) The date by which the certifier must:

(A) Terminate the sale of the equipment as certified equipment; or

(B) Make the necessary change (if so recommended by the Agency); or

(C) Request an opportunity in writing to dispute the allegations of the preliminary decertification.

(b) If the equipment certifier requests an opportunity to respond to the preliminary determination, the certifier and other parties interested in the MOD Director's decision whether to decertify the equipment shall, within 15 days of the date of the request, submit written presentations, including the relevant information and data, to the MOD Director. The MOD Director, in his or her discretion, may provide an opportunity for oral presentations.

(1) Any interested party may request additional time to respond to the information submitted by the equipment certifier. The MOD Director upon a showing of good cause by the interested party may grant an extension of time to reply up to 30 days.

(2) The equipment certifier may have an extension of up to 30 days to reply to information submitted by interested

parties. Notification of intent to reply shall be submitted to the MOD Director within 10 days of the date information from interested parties is submitted to the MOD Director.

(c) If an equipment certifier has disputed the allegations of the preliminary decisions, the MOD Director shall, after reviewing any additional information, notify the equipment certifier of his or her decision whether the equipment may continue to be sold as certified. This notification shall include an explanation upon which the decision was made and the effective date for decertification, where appropriate.

(d) Within 20 days from the date of a decision made pursuant to paragraph (c) of this section, any adversely affected party may appeal the decision to the Office Director.

(1) A petition for appeal to the Office Director must state all of the reasons why the decision of the MOD Director should be reversed.

(2) The Office Director may, in his or her discretion, allow additional oral or written testimony.

(3) If no appeal is filed with the Office Director within the permitted time period, the decision of the MOD Director shall be final.

(e) If a final decision is made to decertify equipment under paragraph (d) of this section, the certifier of such equipment shall notify his immediate customers that, as of the date of the final determination, the equipment in question has been decertified. The equipment certifier shall offer to replace decertified equipment in the customer's inventory with certified replacement equipment or, if unable to do so, shall at the customer's request repurchase such inventory at a reasonable price. The immediate customers must stop selling the equipment once the certifier has notified the customer that the equipment has been decertified.

(f) Notwithstanding the requirements of paragraph (e) of this section, equipment purchased by an urban bus operator prior to decertification, shall be considered certified pursuant to this subpart.

§ 85.1414 Alternative test procedures.

As a part of the certification process, as set forth in § 85.1406, a certifier may request that the Agency approve an alternative test procedure, other than the heavy-duty engine Federal test procedure, to show compliance with the 25 percent reduction in particulate matter emissions as noted in § 85.1403(b)(2)(i). The alternative test may be a chassis-based test, but the alternative test shall be representative of in-use urban bus operation. The requestor shall supply relevant technical support to substantiate its claim of representativeness. Upon an acceptable showing that an alternative test is representative of in-use urban bus operation, the Agency shall determine whether to set such alternative test procedures through rulemaking. The provisions of the certification process apply to such a request for alternative procedures.

EFFECTIVE DATE NOTE: At 58 FR 21386, Apr. 21, 1993, § 85.1414 was added. This section contains information collection and recordkeeping requirements that will not become effective until approval has been given by the Office of Management and Budget.

§ 85.1415 Treatment of confidential information.

(a) Any certifier may assert that some or all of the information submitted pursuant to this subpart is entitled to confidential treatment as provided by 40 CFR part 2, subpart B.

(b) Any claim of confidentiality must accompany the information at the time it is submitted to the Agency.

(c) To assert that information submitted pursuant to this subpart is confidential, a certifier must indicate clearly the items of information claimed confidential by marking, circling, bracketing, stamping, or otherwise specifying the confidential information. In addition to the complete and identical copies submitted pursuant to § 85.1407(a)(6), the submitter shall also provide two identical copies of its submittal from which all confidential information shall be deleted. If a need arises to publicly release nonconfidential information, the Agency will assume that the submitter has accurately deleted all confidential information from this second copy.

(d) If a claim is made that some or all of the information submitted pursuant to this subpart is entitled to confidential treatment, the information covered by that confidentiality claim will be disclosed by the Administrator only to the extent and by means of the procedures set forth in 40 CFR part 2, subpart B.

(e) Information provided without a claim of confidentiality at the time of submission may be made available to the public by the Agency without further notice to the submitter, in accordance with 40 CFR 2.204(c)(2)(i)(A).

Subpart P—Importation of Motor Vehicles and Motor Vehicle Engines

AUTHORITY: 42 U.S.C. 7522, 7525, 7541, 7542(a) and 7601(a).

SOURCE: 52 FR 36156, Sept. 25, 1987, unless otherwise noted.

§ 85.1501 Applicability.

(a) Except where otherwise indicated, this subpart is applicable to motor vehicles and motor vehicle engines which are offered for importation or imported into the United States and for which the Administrator has promulgated regulations under part 86 prescribing emission standards but which are not covered by certificates of conformity issue d under section 206(a) of the Clean Air Act (i.e., which are nonconforming vehicles as defined below), as amended, and part 86 at the time of conditional importation. Compliance with regulations under this subpart shall not relieve any person or entity from compliance with other applicable provisions of the Clean Air Act.

(b) Regulations prescribing further procedures for importation of motor vehicles and motor vehicle engines into the Customs territory of the United States, as defined in 19 U.S.C. 1202, are set forth at 19 CFR 12.73.

(c) References in this subpart to engine families and emission control systems shall be deemed to apply to durability groups and test groups as applicable for manufacturers certifying new light-duty vehicles, light-duty trucks, and Otto-cycle complete heavy-duty vehicles under the provisions of 40 CFR part 86, subpart S.

[52 FR 36156, Sept. 25, 1987, as amended at 64 FR 23919, May 4, 1999; 65 FR 59943, Oct. 6, 2000]

§ 85.1502 Definitions.

(a) As used in this subpart, all terms not defined herein have the meanings given them in 19 CFR 12.73, in the Clean Air Act, as amended, and elsewhere in parts 85 and 86 of this chapter.

(1) *Act*. The Clean Air Act, as amended (42 U.S.C. 7401 *et seq*.).

(2) *Administrator*. The Administrator of the Environmental Protection Agency.

(3) *Certificate of conformity*. The document issued by the Administrator under section 206(a) of the Act.

(4) *Certificate holder*. The entity in whose name the certificate of conformity for a class of motor vehicles or motor vehicle engines has been issued.

(5) *The Federal Compliance Testing sequence (FCT)*. The testing sequence that incorporates all of the testing requirements of part 86 applicable at the time of an emissions test conducted pursuant to this subpart.

(6) *FTP*. The Federal Test Procedure at part 86.

(7) *Independent commercial importer (ICI)*. An importer who is not an original equipment manufacturer (OEM) (see definition below) or does not have a contractual agreement with an OEM to act as its authorized representative for the distribution of motor vehicles or motor vehicle engines in the U.S. market.

(8) *Model year*. The manufacturer's annual production period (as determined by the Administrator) which includes January 1 of such calendar year; *Provided*, That if the manufacturer has no annual production period, the term ''model year'' shall mean the calendar year in which a vehicle is modified. A certificate holder shall be deemed to have produced a vehicle or engine when the certificate holder has modified the nonconforming vehicle or engine.

(9) *Nonconforming vehicle or engine*. A motor vehicle or motor vehicle engine which is not covered by a certificate of conformity prior to final or conditional importation and which has not been finally admitted into the United States

under the provisions of § 85.1505, § 85.1509 or the applicable provisions of § 85.1512. Excluded from this definition are vehicles admitted under provisions of § 85.1512 covering EPA approved manufacturer and U.S. Government Agency catalyst and O_2 sensor control programs.

(10) *Original equipment manufacturer (OEM)*. The entity which originally manufactured the motor vehicle or motor vehicle engine prior to conditional importation.

(11) *Original production (OP) year*. The calendar year in which the motor vehicle or motor vehicle engine was originally produced by the OEM.

(12) *Original production (OP) years old*. The age of a vehicle as determined by subtracting the original production year of the vehicle from the calendar year of importation.

(13) *Running changes*. Those changes in vehicle or engine configuration, equipment or calibration which are made by an OEM or ICI in the course of motor vehicle or motor vehicle engine production.

(14) *United States*. United States includes the States, the District of Columbia, the Commonwealth of Puerto Rico, the Commonwealth of the Northern Mariana Islands, Guam, American Samoa, and the U.S. Virgin Islands.

(15) *Useful life*. A period of time/mileage as specified in part 86 for a nonconforming vehicle which begins at the time of resale (for a motor vehicle or motor vehicle engine owned by the ICI at the time of importation) or release to the owner (for a motor vehicle or motor vehicle engine not owned by the ICI at the time of importation) of the motor vehicle or motor vehicle engine by the ICI after modification and/or test pursuant to § 85.1505 or § 85.1509.

(16) *Working day*. Any day on which Federal government offices are open for normal business. Saturdays, Sundays, and official Federal holidays are not working days.

(b) [Reserved]

[52 FR 36156, Sept. 25, 1987, as amended at 61 FR 5842, Feb. 14, 1996; 70 FR 40430, July 13, 2005]

§ 85.1503 General requirements for importation of nonconforming vehicles and engines.

(a) A nonconforming vehicle or engine offered for importation into the United States must be imported by an ICI who is a current holder of a valid certificate of conformity unless an exemption or exclusion is granted by the Administrator under § 85.1511 of this subpart or the vehicle is eligible for entry under § 85.1512.

(b) Final admission shall not be granted unless:

(1) The vehicle or engine is covered by a certificate of conformity issued in the name of the importer under part 86 and the certificate holder has complied with all requirements of § 85.1505; or

(2) The vehicle or engine is modified and emissions tested in accordance with the provisions of § 85.1509 and the certificate holder has complied with all other requirements of § 85.1509; or

(3) The vehicle or engine is exempted or excluded under § 85.1511; or

(4) The vehicle was covered originally by a certificate of conformity and is otherwise eligible for entry under § 85.1512.

(c) In any one certificate year (e.g., the current model year), an ICI may finally admit no more than the following numbers of nonconforming vehicles or engines into the United States under the provisions of § 85.1505 and § 85.1509, except as allowed by paragraph (e) of this section:

(1) 5 heavy-duty engines.

(2) A total of 50 light-duty vehicles, light-duty trucks, and medium-duty passenger vehicles.

(3) 50 highway motorcycles.

(d) For ICIs owned by a parent company, the importation limits in paragraph (c) of this section include importation by the parent company and all its subsidiaries.

(e) An ICI may exceed the limits outlined paragraphs (c) and (d) of this section, provided that any vehicles/engines in excess of the limits meet the emission standards and other requirements outlined in the provisions of § 85.1515 for the model year in which the motor vehicle/engine is modified (instead of the emission standards and

other requirements applicable for the OP year of the vehicle/engine).

[52 FR 36156, Sept. 25, 1987, as amended at 70 FR 40430, July 13, 2005]

§ 85.1504 Conditional admission.

(a) A motor vehicle or motor vehicle engine offered for importation under § 85.1505, § 85.1509 or § 85.1512 may be conditionally admitted into the United States, but shall be refused final admission unless:

(1) At the time of conditional admission, the importer has submitted to the Administrator a written report that the subject vehicle or engine has been permitted conditional admission pending EPA approval of its application for final admission under § 85.1505, § 85.1509, or § 85.1512. This written report shall contain the following:

(i) Identification of the importer of the vehicle or engine and the importer's address and telephone number;

(ii) Identification of the vehicle or engine owner and the vehicle or engine owner's address, telephone number and taxpayer identification number;

(iii) Identification of the vehicle or engine;

(iv) Information indicating under what provision of these regulations the vehicle or engine is to be imported;

(v) Identification of the place where the subject vehicle or engine will be stored until EPA approval of the importer's application to the Administrator for final admission;

(vi) Authorization for EPA Enforcement Officers to conduct inspections or testing otherwise permitted by the Act or regulations thereunder;

(vii) Identification, where applicable, of the certificate by means of which the vehicle is being imported;

(viii) The original production year of the vehicle; and

(ix) Such other information as is deemed necessary by the Administrator.

(b) Such conditional admission shall not be under bond for a vehicle or engine which is imported under § 85.1505 or § 85.1509. A bond will be required for a vehicle or engine imported under applicable provisions of § 85.1512. The period of conditional admission shall not exceed 120 days. During this period, the importer shall store the vehicle or engine at a location where the Administrator will have reasonable access to the vehicle or engine for his/her inspection.

§ 85.1505 Final admission of certified vehicles.

(a) A motor vehicle or engine may be finally admitted into the United States upon approval of the certificate holder's application to the Administrator. Such application shall be made either by completing EPA forms or by submitting the data electronically to EPA's computer, in accordance with EPA instructions. Such application shall contain:

(1) The information required in § 85.1504(a);

(2) Information demonstrating that the vehicle or engine has been modified in accordance with a valid certificate of conformity. Such demonstration shall be made in one of the following ways:

(i) Through an attestation by the certificate holder that the vehicle or engine has been modified in accordance with the provisions of the certificate holder's certificate, and presentation to EPA of a statement by the appropriate OEM that the OEM will provide to the certificate holder and to EPA information concerning running changes to the vehicle or engine described in the certificate holder's application for certification, and actual receipt by EPA of notification by the certificate holder of any running changes already implemented by the OEM at the time of application and their effect on emissions; or

(ii) Through an attestation by the certificate holder that the vehicle or engine has been modified in accordance with the provisions of the certificate holder's certificate of conformity and that the certificate holder has conducted an FTP test, at a laboratory within the United States, that demonstrates compliance with Federal emission requirements on every third vehicle or third engine imported under that certificate within 120 days of entry, with sequencing of the tests to be determined by the date of importation of each vehicle or engine. Should the certificate holder have exceeded a

threshold of 300 vehicles or engines imported under the certificate without adjustments or other changes in accordance with paragraph (a)(3) of this section, the amount of required FTP testing may be reduced to every fifth vehicle or engine. In order to make a demonstration under paragraph (a)(2)(i) of this section, a certificate holder must have received permission from the Administrator to do so;

(3) The results of every FTP test which the certificate holder conducted on the vehicle or engine. Should a subject vehicle or engine have failed an FTP at any time, the following procedures are applicable:

(i) The certificate holder may either:

(A) Conduct one FTP retest that involves no adjustment of the vehicle or engine from the previous test (e.g., adjusting the RPM, timing, air-to-fuel ratio, etc.) other than adjustments to adjustable parameters that, upon inspection, were found to be out of tolerance. When such an allowable adjustment is made, the parameter may be reset only to the specified (i.e., nominal) value (and not any other value within the tolerance band); or

(B) Initiate a change in production (running change) under the provisions of 40 CFR 86.084–14(c)(13) or 86.1842–01, as applicable, that causes the vehicle to meet Federal emission requirements.

(ii) If the certificate holder chooses to retest in accordance with paragraph (a)(3)(i)(A) of this section:

(A) Such retests must be completed no later than five working days subsequent to the first FTP test;

(B) Should the subject vehicle or engine fail the second FTP, then the certificate holder must initiate a change in production (a running change) under the provisions of 40 CFR 86.084–14(c)(13) or 86.1842–01, as applicable, that causes the vehicle to meet Federal emission requirements.

(iii) If the certificate holder chooses to initiate a change in production (a running change) under the provisions of 40 CFR 86.084–14(c)(13) or 86.1842–01 as applicable, that causes the vehicle to meet Federal requirements, changes involving adjustments of adjustable vehicle parameters (e.g., adjusting the RPM, timing, air/fuel ratio) must be changes in the specified (i.e., nominal) values to be deemed acceptable by EPA.

(iv) Production changes made in accordance with this section must be implemented on all subsequent vehicles or engines imported under the certificate after the date of importation of the vehicle or engine which gave rise to the production change.

(v) Commencing with the first vehicle or engine receiving the running change, every third vehicle or engine imported under the certificate must be FTP tested to demonstrate compliance with Federal emission requirements until, as in paragraph (a)(2)(ii) of this section, a threshold of 300 vehicles or engines imported under the certificate is exceeded, at which time the amount of required FTP testing may be reduced to every fifth vehicle or engine.

(vi) Reports concerning these running changes shall be made to both the Manufacturers Operations and Certification Divisions of EPA within ten working days of initiation of the running change. The cause of any failure of an FTP shall be identified, if known;

(4) The applicable deterioration factor;

(5) The FTP results adjusted by the deterioration factor;

(6) Such other information that may be specified by applicable regulations or on the certificate under which the vehicle or engine has been modified in order to assure compliance with requirements of the Act;

(7) All information required under § 85.1510;

(8) An attestation by the certificate holder that the certificate holder is responsible for the vehicle's or engine's compliance with Federal emission requirements, regardless of whether the certificate holder owns the vehicle or engine imported under this section;

(9) The name, address and telephone number of the person who the certificate holder prefers to receive EPA notification under § 85.1505(c); and

(10) Such other information as is deemed necessary by the Administrator.

(b) EPA approval for final admission of a vehicle or engine under this section shall be presumed not to have been granted if a vehicle has not been

properly modified to be in conformity in all material respects with the description in the application for certification or has not complied with the provisions of § 85.1505(a)(2) or its final FTP results, adjusted by the deterioration factor, if applicable, do not comply with applicable emission standards.

(c) Except as provided in § 85.1505(b), EPA approval for final admission of a vehicle or engine under this section shall be presumed to have been granted should the certificate holder not have received oral or written notice from EPA to the contrary within 15 working days of the date of EPA's receipt of the certificate holder's application under § 85.1505(a). Such EPA notice shall be made to an employee of the certificate holder. If application is made on EPA forms, the date on a certified mail receipt shall be deemed to be the official date of notification to EPA. If application is made by submitting the data electronically, the date of acceptance by EPA's computer shall be deemed to be the official date of notification to EPA. During this 15 working day period, the vehicle or engine must be stored at a location where the Administrator will have reasonable access to the vehicle or engine for his/her inspection.

[52 FR 36156, Sept. 25, 1987, as amended at 64 FR 23919, May 4, 1999]

§ 85.1506 Inspection and testing of imported motor vehicles and engines.

(a) In order to allow the Administrator to determine whether a certificate holder's production vehicles or engines comply with applicable emission requirements or requirements of this subpart, EPA Enforcement Officers are authorized to conduct inspections and/or tests of vehicles or engines imported by the certificate holder. EPA Enforcement Officers shall be admitted during operating hours upon demand and upon presentation of credentials to any of the following:

(1) Any facility where any vehicle or engine imported by the certificate holder under this subpart was or is being modified, tested or stored; and

(2) Any facility where any record or other document relating to modification, testing or storage of the vehicles or engines, or required to be kept by § 85.1507, is located.

EPA may require inspection or retesting of vehicles or engines at the test facility used by the certificate holder or at an EPA-designated testing facility, with transportation and/or testing costs to be borne by the certificate holder.

(b) Upon admission to any facility referred to in paragraph (a) of this section, any EPA Enforcement Officer shall be allowed during operating hours:

(1) To inspect and monitor any part or aspect of activities relating to the certificate holder's modification, testing and/or storage of vehicles or engines imported under this subpart;

(2) To inspect and make copies of any records or documents related to modification, testing and storage of a vehicle or engine, or required by § 85.1507; and

(3) To inspect and photograph any part or aspect of any such vehicle or engine and any component used in the assembly thereof.

(c) Any EPA Enforcement Officer shall be furnished, by those in charge of a facility being inspected, with such reasonable assistance as he/she may request to help him/her discharge any function listed in this subpart. A certificate holder shall cause those in charge of a facility operated for its benefit to furnish such reasonable assistance without charge to EPA (whether or not the certificate holder controls the facility).

(d) The requirements of paragraphs (a), (b) and (c) of this section apply whether or not the certificate holder owns or controls the facility in question. Noncompliance with the requirements of paragraphs (a), (b) and (c) may preclude an informed judgment that vehicles or engines which have been or are being imported under this subpart by the certificate holder comply with applicable emission requirements or requirements of this subpart. It is the certificate holder's responsibility to make such arrangements as may be necessary to assure compliance with paragraphs (a), (b) and (c) of this section. Failure to do so, or other failure to comply with paragraphs (a), (b)

and (c), may result in sanctions as provided for in the Act or § 85.1513(e).

(e) Duly designated Enforcement Officers are authorized to proceed ex parte to seek warrants authorizing the inspection or testing of the motor vehicles or motor vehicle engines described in paragraph (a) of this section whether or not the Enforcement Officer first attempted to seek permission from the certificate holder or facility owner to inspect such motor vehicles or motor vehicle engines.

(f) The results of the Administrator's test under this section shall comprise the official test data for the vehicle or engine for purposes of determining whether the vehicle or engine should be permitted final entry under § 85.1505 or § 85.1509.

(g) For purposes of this section:

(1) ''Presentation of Credentials'' shall mean display of the document designating a person as an EPA Enforcement Officer.

(2) Where vehicle storage areas or facilities are concerned, ''operating hours'' shall means all times during which personnel other than custodial personnel are at work in the vicinity of the area or facility and have access to it.

(3) Where facilities or areas other than those specified in paragraph (g)(2) of this section are concerned, ''operating hours'' shall mean all times during which the facility is in operation.

(4) ''Reasonable assistance'' includes, but is not limited to, clerical, copying, interpreting and translating services, and the making available on request of personnel of the facility being inspected during their working hours to inform the EPA Enforcement Officer of how the facility operates and to answer his/her questions.

§ 85.1507 Maintenance of certificate holder's records.

(a) The certificate holder subject to any of the provisions of this subpart shall establish, maintain and retain for six years from the date of entry of a nonconforming vehicle or engine imported by the certificate holder, adequately organized and indexed records, correspondence and other documents relating to the certification, modification, test, purchase, sale, storage, registration and importation of that vehicle or engine, including but not limited to:

(1) The declaration required by 19 CFR 12.73;

(2) Any documents or other written information required by a Federal government agency to be submitted or retained in conjunction with the certification, importation or emission testing of motor vehicles or motor vehicle engines;

(3) All bills of sale, invoices, purchase agreements, purchase orders, principal or agent agreements and correspondence between the certificate holder and the purchaser, of each vehicle or engine, and any agents of the above parties;

(4) Documents providing parts identification data associated with the emission control system installed on each vehicle or engine demonstrating that such emission control system was properly installed on such vehicle or engine;

(5) Documents demonstrating that, where appropriate, each vehicle or engine was emissions tested in accordance with the Federal Test Procedure.

(6) Documents providing evidence that the requirements of § 85.1510 have been met.

(7) Documents providing evidence of compliance with all relevant requirements of the Clean Air Act, the Energy Tax Act of 1978, and the Energy Policy and Conservation Act;

(8) Documents providing evidence of the initiation of the ''15 day hold'' period for each vehicle or engine imported pursuant to § 85.1505 or § 85.1509;

(9) For vehicles owned by the ICI at the time of importation, documents providing evidence of the date of sale subsequent to importation, together with the name, address and telephone number of the purchaser, for each vehicle or engine imported pursuant to § 85.1505 or § 85.1509;

(10) For vehicles not owned by the ICI at the time of importation, documents providing evidence of the release to the owner subsequent to importation for each vehicle or engine imported pursuant to § 85.1505 or § 85.1509; and

(11) Documents providing evidence of the date of original manufacture of the vehicle or engine.

(b) The certificate holder is responsible for ensuring the maintenance of records required by this section, regardless of whether facilities used by the certificate holder to comply with requirements of this subpart are under the control of the certificate holder.

§ 85.1508 "In Use" inspections and recall requirements.

(a) Vehicles or engines which have been imported, modified and/or FTP tested by a certificate holder pursuant to § 85.1505 or § 85.1509 may be inspected and emission tested by EPA throughout the useful lives of the vehicles or engines.

(b) Certificate holders shall maintain for six years, and provide to EPA upon request, a list of owners of all vehicles or engines imported by the certificate holder under this subpart.

(c) A certificate holder will be notified whenever the Administrator has determined that a substantial number of a class or category of the certificate holder's vehicles or engines, although properly maintained and used, do not conform to the regulations prescribed under section 202 when in actual use throughout their useful lives (as determined under section 202(d)). After such notification, the Recall Regulations at 40 CFR part 1068, subpart G, shall govern the certificate holder's responsibilities and references to a manufacturer in the Recall Regulations shall apply to the certificate holder.

[52 FR 36156, Sept. 25, 1987, as amended at 81 FR 73972, Oct. 25, 2016]

§ 85.1509 Final admission of modification and test vehicles.

(a) Except as provided in paragraphs (b), (c), (d), (e), and (f) of this section, a motor vehicle or motor vehicle engine may be imported under this section by a certificate holder possessing a currently valid certificate of conformity only if:

(1)(i) The vehicle or engine is six OP years old or older; or

(ii) The vehicle was owned, purchased and used overseas by military or civilian employees of the U.S. Government and

(A) An ICI does not hold a currently valid certificate for that particular vehicle; and

(B) The Federal agency employing the owner of such vehicle determines that such owner is stationed in an overseas area which either prohibits the importation of U.S.-certified vehicles or which does not have adequate repair facilities for U.S.-certified vehicles; and

(C) The Federal agency employing the personnel owning such vehicles determines that such vehicles are eligible for shipment to the United States at U.S. Government expense; and

(2) The certificate holder's name has not been placed on a currently effective EPA list of certificate holders ineligible to import such modification/test vehicles, as described in paragraph (j) of this section.

(b) In calendar year 1988, a motor vehicle or motor vehicle engine originally produced in calendar years 1983 through 1987 may be imported under this section by a certificate holder if:

(1) The certificate holder possesses a currently valid certificate of conformity for a vehicle or engine model originally produced in calendar years 1987 or 1988 and the make (i.e., the OEM) and fuel type of such certified model is the same as the make and fuel type of the vehicle or engine being imported under this section; and

(2) The certificate holder's name has not been placed on a currently effective EPA list of certificate holder's ineligible to import such modification/test vehicles, as described in paragraph (j) of this section.

(c) In calendar year 1989, a motor vehicle or motor vehicle engine originally produced in calendar years 1984 through 1987 may be imported under this section by a certificate holder if:

(1) The certificate holder possesses a currently valid certificate of conformity for a vehicle or engine model originally produced in calendar years 1988 or 1989 and the make and fuel type of such certified model is the same as the make and fuel type of the vehicle or engine being imported under this section; and

(2) The certificate holder's name has not been placed on a currently effective EPA list of certificate holders ineligible to import such modification/test vehicles, as described in paragraph (j) of this section,

(d) In calendar year 1990, a motor vehicle or motor vehicle engine originally produced in calendar years 1985 through 1987 may be imported under this section by a certificate holder if:

(1) The certificate holder possesses a currently valid certificate of conformity for a vehicle or engine model originally produced in calendar years 1989 or 1990 and the make and fuel type of such certified model is the same as the make and fuel type of the vehicle or engine being imported under this section; and

(2) The certificate holder's name has not been placed on a currently effective EPA list of certificate holders ineligible to import such modification/test vehicles, as described in paragraph (j) of this section.

(e) In calendar year 1991, a motor vehicle or motor vehicle engine originally produced in calendar years 1986 and 1987 may be imported under this section by a certificate holder if:

(1) The certificate holder possesses a currently valid certificate of conformity for a vehicle or engine model originally produced in calendar years 1990 or 1991 and the make and fuel type of such certified model is the same as the make and fuel type of the vehicle or engine being imported under this section; and

(2) The certificate holder's name has not been placed on a currently effective EPA list of certificate holders ineligible to import such modification/test vehicles, as described in paragraph (j) of this section.

(f) In calendar year 1992, a motor vehicle or motor vehicle engine originally produced in calendar year 1987 may be imported under this section by a certificate holder if:

(1) The certificate holder possesses a currently valid certificate of conformity for a vehicle or engine model originally produced in calendar year 1991 or 1992 and the make and fuel type of such certified model is the same as the make and fuel type of the vehicle or engine being imported under this section; and

(2) The certificate holder's name has not been placed on a currently effective EPA list of certificate holders ineligible to import such modification/test vehicles, as described in paragraph (j) of this section.

(g) A motor vehicle or motor vehicle engine conditionally imported under this section may be finally admitted into the United States upon approval of the certificate holder's application to the Administrator. Such application shall be made either by completing EPA forms or, if the applicant chooses, by submitting the data electronically to EPA's computer, in accordance with EPA instructions. Such application shall contain:

(1) The identification information required in § 85.1504;

(2) An attestation by the certificate holder that the vehicle or engine has been modified and/emission tested in accordance with the FTP at a laboratory within the United States;

(3) The results of any FTP;

(4) The deterioration factor assigned by EPA;

(5) The FTP results adjusted by the deterioration factor;

(6) An attestation by the certificate holder that emission testing and development of fuel economy data as required by § 85.1510 was performed after the vehicle or engine had been modified to conform to Department of Transportation safety standards;

(7) All information required under § 85.1510;

(8) An attestation by the certificate holder that the certificate holder is responsible for the vehicle's or engine's compliance with Federal emission requirements, regardless of whether the certificate holder owns the vehicle or engine imported under this section.

(9) The name, address and telephone number of the person who the certification holder prefers to receive EPA notification under § 85.1509(i).

(10) For any vehicle imported in accordance with paragraphs (b) through (f) of this section, an attestation by the certificate holder that the vehicle is of the same make and fuel type as the vehicle covered by a qualifying certificate as described in paragraphs (b) through (f) of this section, as applicable.

(11) Such other information as is deemed necessary by the Administrator.

(h) EPA approval for final admission of a vehicle or engine under this section shall be presumed not to have been granted if a vehicle's final FTP results, adjusted by the deterioration factor, if applicable, do not comply with applicable emission standards.

(i) Except as provided in § 85.1509(h), EPA approval for final admission of a vehicle or engine under this section shall be presumed to have been granted should the certificate holder not have received oral or written notice from EPA to the contrary within 15 working days of the date of EPA's receipt of the certificate holder's application under § 85.1509(g). Such EPA notice shall be made to an employee of the certificate holder. If application is made on EPA form, the date of a certified mail receipt shall be deemed to be the official date of notification to EPA. If application is made by submitting the data electronically, the date of acceptance by EPA's computer shall be deemed to be the official date of notification to EPA. During this 15 working day period, the vehicle or engine must be stored at a location where the Administrator will have reasonable access to inspect the vehicle or engine.

(j) *EPA list of certificate holders ineligible to import vehicles for modification/test.* EPA shall maintain a current list of certificate holders who have been determined to be ineligible to import vehicles or engines under this section. Such determinations shall be made in accordance with the criteria and procedures in § 85.1513(e) of this subpart.

(k) *Inspections.* Prior to final entry, vehicles or engines imported under this section are subject to special inspections as described in § 85.1506 with these additional provisions:

(1) If a significant number of vehicles imported by a certificate holder fail to comply, in the judgment of the Administrator, with emission requirements upon inspection or retest, or if the certificate holder fails to comply with any provision of these regulations that pertain to vehicles imported pursuant to § 85.1509, the certificate holder may be placed on the EPA list of certificate holders ineligible to import vehicles under this section as specified in paragraph (j) of this section and § 85.1513(e);

(2) Individual vehicles or engines which fail an FTP retest or inspection must be repaired and retested, as applicable, to demonstrate compliance with emission requirements before final admission.

(3) Unless otherwise specified by EPA, the costs of all retesting under this subsection, including transportation, shall be borne by the certificate holder.

(l) *In-Use inspection and testing.* Vehicles or engines imported under this section may be tested or inspected by EPA at any time during the vehicle's or engine's useful life in accordance with § 85.1508 (a) and (b). If, in the judgment of the Administrator, a significant number of properly maintained and used vehicles or engines imported by the certificate holder fail to meet emission requirements, the name of the certificate holder may be placed on the EPA list of certificate holders ineligible to import vehicles under the modification/test provision as specified in paragraph (j) of this section and § 85.1513(e).

§ 85.1510 Maintenance instructions, warranties, emission labeling and fuel economy requirements.

The provisions of this section are applicable to all vehicles or engines imported under the provisions of §§ 85.1505 and 85.1509.

(a) *Maintenance instructions.* (1) The certificate holder shall furnish to the purchaser or to the owner of each vehicle or engine imported under § 85.1505 or § 85.1509 of this section, written instructions for the maintenance and use of the vehicle or engine by the purchaser or owner. Each application for final admission of a vehicle or engine shall provide an attestation that such instructions have been or will be (if the ultimate producer is unknown) furnished to the purchaser or owner of such vehicle or engine at the time of sale or redelivery. The certificate holder shall maintain a record of having furnished such instructions.

(2) For each vehicle or engine imported under § 85.1509, the maintenance and use instructions shall be maintained in a file containing the records for that vehicle or engine.

(3) Such instructions shall not contain requirements more restrictive than those set forth in 40 CFR part 86, subpart A or subpart S, as applicable (Maintenance Instructions), and shall be in sufficient detail and clarity that an automotive mechanic of average training and ability can maintain or repair the vehicle or engine.

(4) Certificate holders shall furnish with each vehicle or engine a list of the emission control parts, and emission-related parts added by the certificate holder and the emission control and emission related parts furnished by the OEM.

(b) *Warranties.* (1) Certificate holders shall provide to vehicle or engine owners emission warranties identical to those required by sections 207 (a) and (b) of the Act and 40 CFR part 85, subpart V. The warranty period for each vehicle or engine shall commence on the date the vehicle or engine is delivered by the certificate holder to the ultimate purchaser or owner.

(2) Certificate holders shall ensure that these warranties:

(i) Are insured by a prepaid mandatory service insurance policy underwritten by an independent insurance company;

(ii) Are transferable to each successive owner for the periods specified in sections 207 (a) and (b); and

(iii) Provide that in the absence of a certificate holder's facility being reasonably available (i.e., within 50 miles) for performance of warranty repairs, such warranty repairs may be performed anywhere.

(3) Certificate holders shall attest in each application for final admission that such warranties will be or have been provided. Copies of such warranties shall be maintained in a file containing the records for that vehicle or engine.

(c) *Emission labeling.* (1) The certificate holder shall affix a permanent legible label in a readily visible position in the engine compartment. The label shall meet all the requirements of part 86 and shall contain the following statement ''This vehicle or engine was originally produced in (month and year of original production). It has been imported and modified by (certificate holder's name, address and telephone number) to conform to U.S. emission regulations applicable to the (year) model year.'' If the vehicle or engine is owned by the certificate holder at the time of importation, the label shall also state ''this vehicle or engine is warranted for five years or 50,000 miles from the date of purchase, whichever comes first.'' If the vehicle or engine is not owned by the certificate holder at the time of importation, the label shall state ''this vehicle or engine is warranted for five years or 50,000 miles from the date of release to the owner, whichever comes first.'' For vehicles imported under § 85.1509, the label shall clearly state in bold letters that ''this vehicle has not been manufactured under a certificate of conformity but meets EPA air pollution control requirements under a modification/test program.'' In addition, for all vehicles, the label shall contain the vacuum hose routing diagram applicable to the vehicles.

(2) As part of the application to the Administrator for final admission of each individual vehicle or engine under § 85.1509, the certificate holder shall maintain a copy of such label for each vehicle or engine in a file containing the records for that vehicle or engine. Certificate holders importing under § 85.1505 or § 85.1509 shall attest to compliance with the above labeling requirements in each application for final admission.

(d) *Fuel economy labeling.* (1) The certificate holder shall affix a fuel economy label that complies with the requirements of 40 CFR part 600, subpart D.

(2) For purposes of generating the fuel economy data to be incorporated on such label, each vehicle imported under § 85.1509 shall be considered to be a separate model type.

(3) As part of the application to the Administrator for final admission of each individual vehicle or engine imported under § 85.1509, the certificate holder shall maintain a copy of such label for each vehicle or engine in a file containing the records for that vehicle or engine. In each application for final admission of a vehicle or engine under § 85.1505 or § 85.1509, the certificate holder shall attest to compliance with the above labeling requirements.

(e) *Gas guzzler tax.* (1) Certificate holders shall comply with any applicable provisions of the Energy Tax Act of 1978, 26 U.S.C. 4064, for every vehicle imported under §§ 85.1505 and 85.1509.

(2) For vehicles not owned by the certificate holder, the certificate holder shall furnish to the vehicle owner applicable IRS forms (currently numbered 720 (Quarterly Federal Excise Tax) and 6197 (Fuel Economy Tax Computation Form)) which relate to the collection of the gas guzzler tax under the Energy Tax Act of 1978, 26 U.S.C. 4064.

(3) As part of the certificate holder's application to EPA for final admission of each vehicle imported under § 85.1509, the certificate holder shall furnish any fuel economy data required by the Energy Tax Act of 1978, 15 U.S.C. 4064.

(f) *Corporate Average Fuel Economy (CAFE).* (1) Certificate holders shall comply with any applicable CAFE requirements of the Energy Policy and Conservation Act, 15 U.S.C. 2001 *et seq.*, and 40 CFR part 600, for all vehicles imported under §§ 85.1505 and 85.1509.

[52 FR 36156, Sept. 25, 1987, as amended at 64 FR 23919, May 4, 1999]

§ 85.1511 Exemptions and exclusions.

(a) Individuals, as well as certificate holders, shall be eligible for importing vehicles into the United States under the provisions of this section, unless otherwise specified.

(b) Notwithstanding any other requirements of this subpart, a motor vehicle or motor vehicle engine entitled to a temporary exemption under this paragraph (b) may be conditionally admitted into the United States if prior written approval for such conditional admission is obtained from the Administrator. Conditional admission shall be under bond. A written request for approval from the Administrator shall contain the identification required in § 85.1504(a)(1) (except for § 85.1504(a)(1)(v)) and information that indicates that the importer is entitled to the exemption. Noncompliance with provisions of this section may result in the forfeiture of the total amount of the bond or exportation of the vehicle or engine. The following temporary exemptions apply:

(1) *Exemption for repairs or alterations.* Vehicles and engines may qualify for a temporary exemption under the provisions of 40 CFR 1068.325(a). Such vehicles or engines may not be registered or licensed in the United States for use on public roads and highways.

(2) *Testing exemption.* Vehicles and engines may qualify for a temporary exemption under the provisions of 40 CFR 1068.325(b). Test vehicles or engines may be operated on and registered for use on public roads or highways provided that the operation is an integral part of the test.

(3) *Precertification exemption.* Prototype vehicles for use in applying to EPA for certification may be imported by independent commercial importers subject to applicable provisions of § 85.1706 and the following requirements:

(i) No more than one prototype vehicle for each engine family for which an independent commercial importer is seeking certification shall be imported by each independent commercial importer.

(ii) Unless a certificate of conformity is issued for the prototype vehicle, the total amount of the bond shall be forfeited or the vehicle must be exported within 180 days from the date of entry.

(4) *Display exemptions.* Vehicles and engines may qualify for a temporary exemption under the provisions of 40 CFR 1068.325(c). Display vehicles or engines may not be registered or licensed for use or operated on public roads or highways in the United States, unless an applicable certificate of conformity has been received.

(c) Notwithstanding any other requirements of this subpart, a motor vehicle or motor vehicle engine may be finally admitted into the United States under this paragraph (c) if prior written approval for such final admission is obtained from the Administrator. Conditional admission of these vehicles is not permitted for the purpose of obtaining written approval from the Administrator. A request for approval shall contain the identification information required in § 85.1504(a)(1) (except for § 85.1504(a)(1)(v)) and information that indicates that the importer is entitled to the exemption or exclusion.

The following exemptions or exclusions apply:

(1) *National security exemption.* Vehicles may be imported under the national security exemption found at 40 CFR 1068.315(a). Only persons who are manufacturers may import a vehicle under a national security exemption.

(2) *Hardship exemption.* The Administrator may exempt on a case-by-case basis certain motor vehicles from Federal emission requirements to accommodate unforeseen cases of extreme hardship or extraordinary circumstances. Some examples are as follows:

(i) Handicapped individuals who need a special vehicle unavailable in a certified configuration;

(ii) Individuals who purchase a vehicle in a foreign country where resale is prohibited upon the departure of such an individual;

(iii) Individuals emigrating from a foreign country to the U.S. in circumstances of severe hardship.

(d) Foreign diplomatic and military personnel may import nonconforming vehicles without bond. At the time of admission, the importer shall submit to the Administrator the written report required in § 85.1504(a)(1) (except for information required by § 85.1504(a)(1)(v)). Such vehicles may not be sold in the United States.

(e) Racing vehicles may be imported by any person provided the vehicles meet one or more of the exclusion criteria specified in § 85.1703. Racing vehicles may not be registered or licensed for use on or operated on public roads and highways in the United States.

(f) The following exclusions and exemptions apply based on date of original manufacture:

(1) Notwithstanding any other requirements of this subpart, the following motor vehicles or motor vehicle engines are excluded from the requirements of the Act in accordance with section 216(3) of the Act and may be imported by any person:

(i) Gasoline-fueled light-duty vehicles and light-duty trucks originally manufactured prior to January 1, 1968.

(ii) Diesel-fueled light-duty vehicles originally manufactured prior to January 1, 1975.

(iii) Diesel-fueled light-duty trucks originally manufactured prior to January 1, 1976.

(iv) Motorcycles originally manufactured prior to January 1, 1978.

(v) Gasoline-fueled and diesel-fueled heavy-duty engines originally manufactured prior to January 1, 1970.

(2) Notwithstanding any other requirements of this subpart, a motor vehicle or motor vehicle engine not subject to an exclusion under paragraph (f)(1) of this section but greater than twenty OP years old is entitled to an exemption from the requirements of the Act, provided that it is imported into the United States by a certificate holder. At the time of admission, the certificate holder shall submit to the Administrator the written report required in § 85.1504(a)(1) (except for information required by § 85.1504(a)(1)(v)).

(g) Applications for exemptions and exclusions provided for in paragraphs (b) and (c) of this section shall be mailed to the Designated Compliance Officer (see 40 CFR 1068.30).

(h) Vehicles conditionally or finally admitted under this section must still comply with all applicable requirements, if any, of the Energy Tax Act of 1978, the Energy Policy and Conservation Act and any other Federal or state requirements.

[76 FR 57373, Sept. 15, 2011]

§ 85.1512 Admission of catalyst and O_2 sensor-equipped vehicles.

(a)(1) Notwithstanding other provisions of this subpart, any person may conditionally import a vehicle which:

(i) Was covered by a certificate of conformity at the time of original manufacture or had previously been admitted into the United States under § 85.1505 or § 85.1509 (after June 30, 1988).

(ii) Was certified, or previously admitted under § 85.1505 or § 85.1509 (after June 30, 1988), with a catalyst emission control system and/or O_2 sensor;

(iii) Is labeled in accordance with 40 CFR part 86, subpart A or subpart S, or, where applicable, § 85.1510(c); and

(iv) Has been driven outside the United States, Canada and Mexico or such other countries as EPA may designate.

(2) Such vehicle must be entered under bond pursuant to 19 CFR 12.73

unless it is included in a catalyst and O_2 sensor control program approved by the Administrator upon such terms as may be deemed appropriate. Catalyst and O_2 sensor programs conducted by manufacturers may be approved each model year.

(b) For the purpose of this section, ''catalyst and O_2 sensor control program'' means a program instituted and maintained by a manufacturer, or any U.S. Government Agency for the purpose of preservation, replacement, or initial installation of catalytic converters and cleaning and/or replacement of O_2 sensors and, if applicable, restricted fuel filler inlets.

(c) For the purpose of this section, ''driven outside the United States, Canada and Mexico'' does not include mileage accumulated on vehicles solely under the control of manufacturers of new motor vehicles or engines for the purpose of vehicle testing and adjustment, and preparation for shipment to the United States.

(d) Vehicles conditionally imported pursuant to this section and under bond must be modified in accordance with the certificate of conformity applicable at the time of manufacture. In the case of vehicles previously imported under §85.1509 or §85.1504 (prior to July 1, 1988), the replacement catalyst and O_2 sensor, if applicable, must be equivalent (in terms of emission reduction) to the original catalyst and O_2 sensor. Such vehicles may be granted final admission upon application to the Administrator, on forms specified by the Administrator. Such application shall contain the information required in §85.1504(a)(1) (i) through (v) and shall contain both an attestation by a qualified mechanic that the catalyst has been replaced and the O_2 sensor has been replaced, if necessary, and that both parts are functioning properly, and a copy of the invoice for parts and labor.

[52 FR 36156, Sept. 25, 1987, as amended at 64 FR 23919, May 4, 1999]

§85.1513 Prohibited acts; penalties.

(a) The importation of a motor vehicle or motor vehicle engine which is not covered by a certificate of conformity other than in accordance with this subpart and the entry regulations of the U.S. Customs Service at 19 CFR 12.73 is prohibited. Failure to comply with this section is a violation of section 203(a)(1) of the Act.

(b) Unless otherwise permitted by this subpart, during a period of conditional admission, the importer of a vehicle shall not:

(1) Operate the vehicle on streets or highways,

(2) Sell or offer the vehicle or engine for sale, or

(3) Store the vehicle on the premises of a dealer.

(c) Any vehicle or engine conditionally admitted pursuant to §85.1504, §85.1511 or §85.1512, and not granted final admission within 120 days of such conditional admission, or within such additional time as the U.S. Customs Service may allow, shall be deemed to be unlawfully imported into the United States in violation of section 203(a)(1) of the Act, unless such vehicle or engine shall have been delivered to the U.S. Customs Service for export or other disposition under applicable Customs laws and regulations. Any vehicles or engines not so delivered shall be subject to seizure by the U.S. Customs Service.

(d) Any importer who violates section 203(a)(1) of the Act is subject to a civil penalty under section 205 of the Act of not more than $32,500 for each vehicle or engine subject to the violation. In addition to the penalty provided in the Act, where applicable, under the exemption provisions of §85.1511(b), or under §85.1512, any person or entity who fails to deliver such vehicle or engine to the U.S. Customs Service is liable for liquidated damages in the amount of the bond required by applicable Customs laws and regulations.

(e)(1) A certificate holder whose vehicles or engines imported under §85.1505 or §85.1509 fail to conform to Federal emission requirements after modification and/or testing under the Federal Test Procedure (FTP) or who fails to comply with applicable provisions of this subpart, may, in addition to any other applicable sanctions and penalties, be subject to any, or all, of the following sanctions:

(i) The certificate holder's currently held certificates of conformity may be revoked or suspended;

(ii) The certificate holder may be deemed ineligible to apply for new certificates for up to 3 years; and

(iii) The certificate holder may be deemed ineligible to import vehicles or engines under § 85.1509 in the future and be placed on a list of certificate holders ineligible to import vehicles or engines under the provisions of § 85.1509.

(2) Grounds for the actions described in paragraph (e)(1) of this section shall include, but not be limited to, the following:

(i) Action or inaction by the certificate holder or the laboratory performing the FTP on behalf of the certificate holder which results in fraudulent, deceitful or grossly inaccurate representation of any fact or condition which affects a vehicle's or engine's eligibility for admission to the U.S. under this subpart;

(ii) Failure of a significant number of vehicles or engines imported to comply with Federal emission requirements upon EPA inspection or retest; or

(iii) Failure by a certificate holder to comply with requirements of this subpart.

(3) The following procedures govern any decision to suspend, revoke, or refuse to issue certificates under this subpart:

(i) When grounds appear to exist for the actions described in paragraph (e)(1) of this section, the Administrator shall notify the certificate holder in writing of any intended suspension or revocation of a certificate, proposed ineligibility to apply for new certificates, or intended suspension of eligibility to conduct modification/testing under § 85.1509, and the grounds for such action.

(ii) Except as provided by paragraph (e)(3)(iv) of this section, the certificate holder must take the following actions before the Administrator will consider withdrawing notice of intent to suspend or revoke the certificate holder's certificate or the certificate holder's eligibility to perform modification/testing under § 85.1509:

(A) Submit a written report to the Administrator which identifies the reason for the noncompliance of the vehicle or engines, describes the proposed remedy, including a description of any proposed quality control and/or quality assurance measures to be taken by the certificate holder to prevent the future occurrence of the problem, and states the date on which the remedies will be implemented; or

(B) Demonstrate that the vehicles or engines do in fact comply with applicable regulations in this chapter by retesting such vehicles or engines in accordance with the FTP.

(iii) A certificate holder may request within 15 calendar days of the Administrator's notice of intent to suspend or revoke a certificate holder's eligibility to perform modification/testing or certificate that the Administrator grant such certificate holder a hearing:

(A) As to whether the tests have been properly conducted,

(B) As to any substantial factual issue raised by the Administrator's proposed action.

(iv) If, after the Administrator notifies a certificate holder of his/her intent to suspend or revoke a certificate holder's certificate of conformity or its eligibility to perform modification/testing under § 85.1509 and prior to any final suspension or revocation, the certificate holder demonstrates to the Administrator's satisfaction that the decision to initiate suspension or revocation of the certificate or eligibility to perform modification/testing under § 85.1509 was based on erroneous information, the Administrator will withdraw the notice of intent.

(4) Hearings on suspensions and revocations of certificates of conformity or of eligibility to perform modification/testing under § 85.1509 shall be held in accordance with 40 CFR part 1068, subpart G.

(5) When a hearing is requested under this paragraph and it clearly appears from the data or other information contained in the request for a hearing, or submitted at the hearing, that there is no genuine and substantial question of fact with respect to the issue of whether the certificate holder failed to comply with this subpart, the Administrator will enter an order denying the request for a hearing, or terminating the hearing, and suspending or revoking the certificate of conformity or the

certificate holder's eligibility to perform modification/testing under § 85.1509.

(6) In lieu of requesting a hearing under paragraph (e)(3)(iii) of this section, a certificate holder may respond in writing to EPA's charges in the notice of intent to suspend or revoke. Such a written response must be received by EPA within 30 days of the date of EPA's notice of intent. No final decision to suspend or revoke will be made before that time.

[52 FR 36156, Sept. 25, 1987, as amended at 70 FR 40430, July 13, 2005; 81 FR 73972, Oct. 25, 2016]

§ 85.1514 Treatment of confidential information.

(a) Any importer may assert that some or all of the information submitted pursuant to this subpart is entitled to confidential treatment as provided by 40 CFR part 2, subpart B.

(b) Any claim of confidentiality must accompany the information at the time it is submitted to EPA.

(c) To assert that information submitted pursuant to this subpart is confidential, an importer must indicate clearly the items of information claimed confidential by marking, circling, bracketing, stamping, or otherwise specifying the confidential information. Furthermore, EPA requests, but does not require, that the submitter also provide a second copy of its submittal from which all confidential information has been deleted. If a need arises to publicly release nonconfidential information, EPA will assume that the submitter has accurately deleted the confidential information from this second copy.

(d) If a claim is made that some or all of the information submitted pursuant to this subpart is entitled to confidential treatment, the information covered by that confidentiality claim will be disclosed by the Administrator only to the extent and by means of the procedures set forth in part 2, subpart B, of this chapter.

(e) Information provided without a claim of confidentiality at the time of submission may be made available to the public by EPA without further notice to the submitter.

§ 85.1515 Emission standards and test procedures applicable to imported nonconforming motor vehicles and motor vehicle engines.

(a) Notwithstanding any other requirements of this subpart, any motor vehicle or motor vehicle engine conditionally imported pursuant to § 85.1505 or § 85.1509 and required to be emission tested shall be tested using the FCT at 40 CFR part 86 applicable to current model year motor vehicles and motor vehicle engines at the time of testing or reduced testing requirements as follows:

(1) ICIs are eligible for reduced testing under this paragraph (a) subject to the following conditions:

(i) The OEM must have a valid certificate of conformity covering the vehicle.

(ii) The vehicle must be in its original configuration as certified by the OEM. This applies for all emission-related components, including the electronic control module, engine calibrations, and all evaporative/refueling control hardware. It also applies for OBD software and hardware, including all sensors and actuators.

(iii) The vehicle modified as described in paragraph (a)(1)(ii) of this section must fully comply with all applicable emission standards and requirements.

(iv) Vehicles must have the proper OBD systems installed and operating. When faults are present, the ICI must test and verify the system's ability to find the faults (such as disconnected components), set codes, and illuminate the light, and set readiness codes as appropriate for each vehicle. When no fault is present, the ICI must verify that after sufficient prep driving (typically one FTP test cycle), all OBD readiness codes are set and the OBD system does not indicate a malfunction (i.e., no codes set and no light illuminated).

(v) The ICI may not modify more than 300 vehicles in any given model year using reduced testing provisions in this paragraph (a).

(vi) The ICI must state in the application for certification that it will meet all the conditions in this paragraph (a)(1).

(2) The following provisions allow for ICIs to certify vehicles with reduced testing:

(i) In addition to the test waivers specified in 40 CFR 86.1829, you may provide a statement in the application for certification, supported by engineering analysis, that vehicles comply with any of the following standards that apply instead of submitting test data:

(A) Cold temperature CO and NMHC emission standards specified in 40 CFR 86.1811.

(B) SFTP emission standards specified in 40 CFR 86.1811 and 86.1816 for all pollutants.

(C) For anything other than diesel-fueled vehicles, PM emission standards specified in 40 CFR 86.1811 and 86.1816.

(D) Any running loss, refueling, spitback, bleed emissions, and leak standards specified in 40 CFR part 86, subparts A and S.

(ii) You must perform testing and submit test data as follows to demonstrate compliance with emission standards:

(A) *Exhaust and fuel economy tests.* You must measure emissions over the FTP driving cycle and the highway fuel economy driving cycle as specified in 40 CFR 600.109 to meet the fuel economy requirements in 40 CFR part 600 and demonstrate compliance with the exhaust emission standards in 40 CFR part 86 (other than PM). Measure exhaust emissions and fuel economy with the same test procedures used by the original manufacturer to test the vehicle for certification. However, you must use an electric dynamometer meeting the requirements of § 86.108 or 40 CFR part 1066, subpart B, unless we approve a different dynamometer based on excessive compliance costs. If you certify based on testing with a different dynamometer, you must state in the application for certification that all vehicles in the emission family will comply with emission standards if tested on an electric dynamometer.

(B) *Evaporative emission test.* You may measure evaporative emissions as specified in this paragraph (a)(2)(ii)(B) to demonstrate compliance with the evaporative emission standards in 40 CFR part 86 instead of the otherwise specified procedures. Use measurement equipment for evaporative measurements specified in 40 CFR part 86, subpart B, except that the evaporative emission enclosure does not need to accommodate varying ambient temperatures. The evaporative measurement procedure is integral to the procedure for measuring exhaust emissions over the FTP driving cycle as described in paragraph (a)(ii)(2)(A) of this section. Perform canister preconditioning using the same procedure used by the original manufacturer to certify the vehicle; perform this canister loading before the initial preconditioning drive. Perform a diurnal emission test at the end of the stabilization period before the exhaust emission test by heating the fuel from 60 to 84 °F, either by exposing the vehicle to increasing ambient temperatures or by applying heat directly to the fuel tank. Measure hot soak emissions as described in 40 CFR 86.138–96(k). We may approve alternative measurement procedures that are equivalent to or more stringent than the specified procedures if the specified procedures are impractical for particular vehicle models or measurement facilities. The sum of the measured diurnal and hot soak values must meet the appropriate emission standard as specified in this section.

(b) The emission standards applicable to nonconforming light-duty vehicles and light-duty trucks imported pursuant to this subpart are outlined in tables 1 and 2 of this section, respectively. The useful life as specified in tables 1 and 2 of this section is applicable to imported light-duty vehicles and light-duty trucks, respectively.

(c)(1) Nonconforming motor vehicles or motor vehicle engines of 1994 OP year and later conditionally imported pursuant to § 85.1505 or § 85.1509 shall meet all of the emission standards specified in 40 CFR part 86 for the OP year of the vehicle or motor vehicle engine. The useful life specified in 40 CFR part 86 for the OP year of the motor vehicle or motor vehicle engine is applicable where useful life is not designated in this subpart.

(2)(i) Nonconforming light-duty vehicles and light light-duty trucks (LDV/LLDTs) originally manufactured in OP years 2004, 2005 or 2006 must meet the FTP exhaust emission standards of bin

9 in Tables S04–1 and S04–2 in 40 CFR 86.1811–04 and the evaporative emission standards for light-duty vehicles and light light-duty trucks specified in 40 CFR 86.1811–01(e)(5).

(ii) Nonconforming LDT3s and LDT4s (HLDTs) and medium-duty passenger vehicles (MDPVs) originally manufactured in OP years 2004 through 2006 must meet the FTP exhaust emission standards of bin 10 in Tables S04–1 and S04–2 in 40 CFR 86.1811–04 and the applicable evaporative emission standards specified in 40 CFR 86.1811–04(e)(5). For 2004 OP year HLDTs and MDPVs where modifications commence on the first vehicle of a test group before December 21, 2003, this requirement does not apply to the 2004 OP year. ICIs opting to bring all of their 2004 OP year HLDTs and MDPVs into compliance with the exhaust emission standards of bin 10 in Tables S04–1 and S04–2 in 40 CFR 86.1811–04, may use the optional higher NMOG values for their 2004–2006 OP year LDT2s and 2004–2008 LDT4s.

(iii) Nonconforming LDT3s and LDT4s (HLDTs) and medium-duty passenger vehicles (MDPVs) originally manufactured in OP years 2007 and 2008 must meet the FTP exhaust emission standards of bin 8 in Tables S04–1 and S04–2 in 40 CFR 86.1811–04 and the applicable evaporative standards specified in 40 CFR 86.1811–04(e)(5).

(iv) Nonconforming LDV/LLDTs originally manufactured in OP years 2007 through 2021 and nonconforming HLDTs and MDPVs originally manufactured in OP year 2009 through 2021 must meet the FTP exhaust emission standards of bin 5 in Tables S04–1 and S04–2 in 40 CFR 86.1811–04, and the evaporative standards specified in 40 CFR 86.1811–04(e)(1) through (4).

(v) ICIs are exempt from the Tier 2 and the interim non-Tier2 phase-in intermediate percentage requirements for exhaust, evaporative, and refueling emissions described in 40 CFR 86.1811–04.

(vi) In cases where multiple standards exist in a given model year in 40 CFR part 86 due to phase-in requirements of new standards, the applicable standards for motor vehicle engines required to be certified to engine-based standards are the least stringent standards applicable to the engine type for the OP year.

(vii) Nonconforming LDV/LLDTs originally manufactured in OP years 2009 through 2021 must meet the evaporative emission standards in Table S09–1 in 40 CFR 86.1811–09(e). However, LDV/LLDTs originally manufactured in OP years 2009 and 2010 and imported by ICIs who qualify as small-volume manufacturers as defined in 40 CFR 86.1838–01 are exempt from the LDV/LLDT evaporative emission standards in Table S09–1 in 40 CFR 86.1811–09(e), but must comply with the Tier 2 evaporative emission standards in Table S04–3 in 40 CFR 86.1811–04(e).

(viii) Nonconforming HLDTs and MDPVs originally manufactured in OP years 2010 through 2021 must meet the evaporative emission standards in Table S09–1 in 40 CFR 86.1811–09(e). However, HLDTs and MDPVs originally manufactured in OP years 2010 and 2011 and imported by ICIs, who qualify as small-volume manufacturers as defined in 40 CFR 86.1838–01, are exempt from the HLDTs and MDPVs evaporative emission standards in Table S09–1 in 40 CFR 86.1811–09(e), but must comply with the Tier 2 evaporative emission standards in Table S04–3 in 40 CFR 86.1811–04(e).

(ix) Nonconforming LDVs, LDTs, MDPVs, and complete heavy-duty vehicles at or below 14,000 pounds GVWR originally manufactured in OP years 2022 and later must meet the Tier 3 exhaust and evaporative emission standards in 40 CFR 86.1811–17, 86.1813–17, and 86.1816–18.

(3)(i) As an option to the requirements of paragraph (c)(2) of this section, independent commercial importers may elect to meet lower bins in Tables S04–1 and S04–2 of 40 CFR 86.1811–04 than specified in paragraph (c)(2) of this section and bank or sell NO_X credits as permitted in 40 CFR 86.1860–04 and 40 CFR 86.1861–04. An ICI may not meet higher bins in Tables S04–1 and S04–2 of 40 CFR 86.1811–04 than specified in paragraph (c)(2) of this section unless it demonstrates to the Administrator at the time of certification that it has obtained appropriate and sufficient NO_X credits from another manufacturer, or has generated them in a previous model year or in the current

model year and not transferred them to another manufacturer or used them to address other vehicles as permitted in 40 CFR 86.1860–04 and 40 CFR 86.1861–04.

(ii) Where an ICI desires to obtain a certificate of conformity using a bin higher than specified in paragraph (c)(2) of this section, but does not have sufficient credits to cover vehicles produced under such certificate, the Administrator may issue such certificate if the ICI has also obtained a certificate of conformity for vehicles certified using a bin lower than that required under paragraph (c)(2) of this section. The ICI may then produce vehicles to the higher bin only to the extent that it has generated sufficient credits from vehicles certified to the lower bin during the same model year.

(4) [Reserved]

(5) Except for the situation where an ICI desires to bank, sell or use NO_X credits as described in paragraph (c)(3) of this section, the requirements of 40 CFR 86.1811–04 related to fleet average NO_X standards and requirements to comply with such standards do not apply to vehicles modified under this subpart.

(6) ICIs using bins higher than those specified in paragraph (c)(2) of this section must monitor their production so that they do not produce more vehicles certified to the standards of such bins than their available credits can cover. ICIs must not have a credit deficit at the end of a model year and are not permitted to use the deficit carryforward provisions provided in 40 CFR 86.1860–04(e).

(7) The Administrator may condition the certificates of conformity issued to ICIs as necessary to ensure that vehicles subject to paragraph (c) of this section comply with the appropriate average NO_X standard for each model year.

(8)(i) Nonconforming LDV/LLDTs originally manufactured in OP years 2010 and later must meet the cold temperature NHMC emission standards in Table S10–1 in 40 CFR 86.1811–10(g).

(ii) Nonconforming HLDTs and MDPVs originally manufactured in OP years 2012 and later must meet the cold temperature NHMC emission standards in Table S10–1 in 40 CFR 86.1811–10(g).

(iii) ICIs, which qualify as small-volume manufacturers, are exempt from the cold temperature NMHC phase-in intermediate percentage requirements described in 40 CFR 86.1811–10(g)(3). See 40 CFR 86.1811–04(k)(5)(vi) and (vii).

(iv) As an alternative to the requirements of paragraphs (c)(8)(i) and (ii) of this section, ICIs may elect to meet a cold temperature NMHC family emission level below the cold temperature NMHC fleet average standards specified in Table S10–1 of 40 CFR 86.1811–10 and bank or sell credits as permitted in 40 CFR 86.1864–10. An ICI may not meet a higher cold temperature NMHC family emission level than the fleet average standards in Table S10–1 of 40 CFR 86.1811–10 as specified in paragraphs (c)(8)(i) and (ii) of this section, unless it demonstrates to the Administrator at the time of certification that it has obtained appropriate and sufficient NMHC credits from another manufacturer, or has generated them in a previous model year or in the current model year and not traded them to another manufacturer or used them to address other vehicles as permitted in 40 CFR 86.1864–10.

(v) Where an ICI desires to obtain a certificate of conformity using a higher cold temperature NMHC family emission level than specified in paragraphs (c)(8)(i) and (ii) of this section, but does not have sufficient credits to cover vehicles imported under such certificate, the Administrator may issue such certificate if the ICI has also obtained a certificate of conformity for vehicles certified using a cold temperature NMHC family emission level lower than that required under paragraphs (c)(8)(i) and (ii) of this section. The ICI may then import vehicles to the higher cold temperature NMHC family emission level only to the extent that it has generated sufficient credits from vehicles certified to a family emission level lower than the cold temperature NMHC fleet average standard during the same model year.

(vi) ICIs using cold temperature NMHC family emission levels higher than the cold temperature NMHC fleet average standards specified in paragraphs (c)(8)(i) and (ii) of this section must monitor their imports so that

they do not import more vehicles certified to such family emission levels than their available credits can cover. ICIs must not have a credit deficit at the end of a model year and are not permitted to use the deficit carryforward provisions provided in 40 CFR 86.1864–10.

(vii) The Administrator may condition the certificates of conformity issued to ICIs as necessary to ensure that vehicles subject to this paragraph (c)(8) comply with the applicable cold temperature NMHC fleet average standard for each model year.

(d) Except as provided in paragraph (c) of this section, ICI's must not participate in emission-related programs for emissions averaging, banking and trading, or nonconformance penalties.

TABLE 1 TO § 85.1515—EMISSION STANDARDS APPLICABLE TO IMPORTED LIGHT-DUTY MOTOR VEHICLES[1 2 3]

OP Year	Hydrocarbon	Carbon monoxide	Oxides of nitrogen	Diesel particulate	Evaporative hydrocarbon	Useful life (years/miles)
1968–1976	1.5 gpm	15 gpm	3.1 gpm		6.0 g/test	5/50,000
1977–1979	1.5 gpm	15 gpm	2.0 gpm		6.0 g/test	5/50,000
1980	0.41 gpm	7.0 gpm	2.0 gpm		6.0 g/test	5/50,000
1981	0.41 gpm	3.4 gpm	1.0 gpm		2.0 g/test	5/50,000
1982–1986	0.41 gpm	3.4 gpm	1.0 gpm	0.60 gpm	2.0 g/test	5/50,000
1987–1993	0.41 gpm	3.4 gpm	1.0 gpm	0.20 gpm	2.0 g/test	5/50,000
1994 and later	(4)	(4)	(4)	(4)	(4)	(4)

[1] Diesel particulate standards apply only to diesel fueled light-duty vehicles. Evaporative hydrocarbon standards apply only to non-diesel fueled light-duty vehicles. For alternative fueled light-duty vehicles, the evaporative hydrocarbon standard is interpreted as organic material hydrocarbon equivalent grams carbon per test, as applicable.

[2] No crankcase emissions shall be discharged into the ambient atmosphere from any non-diesel fueled light-duty vehicle.

[3] All light-duty vehicles shall meet the applicable emission standards at both low and high-altitudes according to the procedures specified in 40 CFR part 86 for current model year motor vehicles at the time of testing.

[4] Specified in 40 CFR part 86 for the OP year of the vehicle, as described in paragraph (c) of this section.

TABLE 2 TO § 85.1515—EMISSION STANDARDS APPLICABLE TO IMPORTED LIGHT-DUTY TRUCKS[1 2 3 4 5]

OP Year	Hydrocarbon	Carbon monoxide	Oxides of nitrogen	Diesel particulate	Evaporative hydrocarbon	Useful life (years/miles)
1968–78	2.0 gpm	20 gpm	3.1 gpm		6.0 g/test	5/50,000
1979–80	1.7 gpm	18 gpm	2.3 gpm		6.0 g/test	5/50,000
1981	1.7 gpm	18 gpm	2.3 gpm		2.0 g/test	5/50,000
1982–1983	1.7 gpm	18 gpm	2.3 gpm	0.60 gpm	2.0 g/test	5/50,000
	(2.0)	(26)	(2.3)	(0.60)	(2.6)	
1984	0.80 gpm	10 gpm	2.3 gpm	0.60 gpm	2.0 g/test	5/50,000
	(1.0)	(14)	(2.3)	(0.60)	(2.6)	
1985–1986	0.80 gpm	10 gpm	2.3 gpm	0.60 gpm	2.0 g/test	11/120,000
	(1.0)	(14)	(2.3)	(0.60)	(2.6)	
1987	0.80 gpm	10 gpm	2.3 gpm	0.26 gpm	2.0 g/test	11/120,000
	(1.0)	(14)	(2.3)	(0.26)	(2.6)	
1988–1989	0.80 gpm	10 gpm	1.2 gpm[6]	0.26 gpm[7]	2.0 g/test	11/120,000
	(1.0)	(14)	(1.2)	(2.0)	(2.6)	
1988–1989	0.80 gpm	10 gpm	1.7 gpm[6]	0.45 gpm[7]	2.0 g/test	11/120,000
	(1.0)	(14)	(1.7)	(0.26)	(2.6)	
1988–1989	0.80 gpm	10 gpm	2.3 gpm[6]	0.45 gpm[7]	2.0 g/test	11/120,000
	(1.0)	(14)	(2.3)	(0.26)	(2.6)	
1990–1993	0.80 gpm	10 gpm	1.2 gpm[8]	0.26 gpm[7]	2.0 g/test	11/120,000
	(1.0)	(14)	(1.2)	(0.26)	(2.6)	
1990–1993	0.80 gpm	10 gpm	1.7 gpm[8]	0.45 gpm[7]	2.0 g/test	11/120,000
	(1.0)	(14)	(1.7)	(0.26)	(2.6)	
1994 and later	(9)	(9)	(9)	(9)	(9)	(9)

[1] Diesel particulate standards apply only to diesel fueled light-duty trucks. Evaporative hydrocarbon standards apply only to non-diesel fueled light-duty trucks. For alternative fueled light-duty trucks, the evaporative hydrocarbon standard is interpreted as organic material hydrocarbon equivalent grams carbon per test, as applicable.

[2] No crankcase emissions shall be discharged into the ambient atmosphere from any non-diesel fueled light-duty truck.

[3] A carbon monoxide standard of 0.50% of exhaust flow at curb idle is applicable to all 1984 and later model year light-duty trucks sold to, or owned by, an importer for principal use at other than a designated high-altitude location. This requirement is effective for light-duty trucks sold to, or owned by an importer for principal use at a designated high-altitude location beginning with the 1988 model year.

[4] All 1982 OP year and later light-duty trucks sold to, or owned by, an importer for principal use at a designated high-altitude location shall meet high-altitude emission standards according to the requirements specified in 40 CFR part 86 for current model year light-duty trucks at the time of testing.

[5] Standards in parentheses apply to motor vehicles sold to, or owned by, an importer for principal use at a designated high-altitude location. These standards must be met at high-altitude according to the procedures specified in 40 CFR part 86 for current model year motor vehicles at the time of testing.

[6] The oxides of nitrogen standard of 1.2 gpm applies to light-duty trucks at or below 3,750 pounds loaded vehicle weight and at or below 6,000 pounds GVWR. The 1.7 gpm standard applies to light-duty trucks above 3,750 pound loaded vehicle weight and at or below 6,000 pounds GVWR; the 2.3 gpm standard applies to light-duty trucks above 6,000 pounds GVWR.

[7] The diesel particulate standard of 0.26 gpm applies to light-duty trucks at or below 3,750 pounds loaded vehicle weight; the 0.45 gpm standard applies to light-duty trucks above 3,750 pounds loaded vehicle weight.

[8] The NO_X standard of 1.2 gpm applies to light-duty trucks at or below 3,750 pounds loaded vehicle weight; the 1.7 gpm standard applies to light-duty trucks above 3,750 pounds loaded vehicle weight.

[9] Specified in 40 CFR part 86 for the OP year of the vehicle, as described in paragraph (c) of this section.

[79 FR 23681, Apr. 28, 2014]

Subpart Q [Reserved]

Subpart R—Exclusion and Exemption of Motor Vehicles and Motor Vehicle Engines

AUTHORITY: Secs. 208(b)(1), 216(2), and 301, Clean Air Act (42 U.S.C. 7522, 7550, and 7061).

SOURCE: 39 FR 32611, Sept. 10, 1974, unless otherwise noted.

§ 85.1701 General applicability.

(a) The provisions of this subpart regarding exemptions are applicable to new and in-use motor vehicles and motor vehicle engines, except as follows:

(1) Beginning January 1, 2014, the exemption provisions of 40 CFR part 1068, subpart C, apply instead of the provisions of this subpart for heavy-duty motor vehicle engines regulated under 40 CFR part 86, subpart A, except that the nonroad competition exemption of 40 CFR 1068.235 and the nonroad hardship exemption provisions of 40 CFR 1068.245, 1068.250, and 1068.255 do not apply for motor vehicle engines.

(2) Prior to January 1, 2014, the provisions of §§ 85.1706 through 85.1709 apply for heavy-duty motor vehicle engines.

(b) The provisions of this subpart regarding exclusion are applicable after the effective date of these regulations.

(c) References in this subpart to engine families and emission control systems shall be deemed to apply to durability groups and test groups as applicable for manufacturers certifying new light-duty vehicles, light-duty trucks, and Otto-cycle complete heavy-duty vehicles under the provisions of 40 CFR part 86, subpart S.

(d) In a given model year, manufacturers of motor vehicles and motor vehicle engines may ask us to approve the use of administrative or compliance procedures specified in 40 CFR part 1068 instead of the comparable procedures that apply for vehicles or engines certified under this part or 40 CFR part 86.

[76 FR 57374, Sept. 15, 2011, as amended at 81 FR 73972, Oct. 25, 2016]

§ 85.1702 Definitions.

(a) As used in this subpart, all terms not defined herein shall have the meaning given them in the Act:

(1) *Export exemption* means an exemption granted by statute under section 203(b)(3) of the Act for the purpose of exporting new motor vehicles or new motor vehicle engines.

(2) *National security exemption* means an exemption which may be granted under section 203(b)(1) of the Act for the purpose of national security.

(3) *Pre-certification vehicle* means an uncertified vehicle which a manufacturer employs in fleets from year to year in the ordinary course of business for product development, production method assessment, and market promotion purposes, but in a manner not involving lease or sale.

(4) *Pre-certification vehicle engine* means an uncertified heavy-duty engine owned by a manufacturer and used in a manner not involving lease or sale in a vehicle employed from year to year in the ordinary course of business for product development, production method assessment and market promotion purposes.

(5) *Testing exemption* means an exemption which may be granted under section 203(b)(1) for the purpose of research investigations, studies, demonstrations or training, but not including national security.

[39 FR 32611, Sept. 10, 1974, as amended at 45 FR 13733, Mar. 3, 1980; 47 FR 30484, July 14, 1982]

§ 85.1703 Definition of motor vehicle.

(a) For the purpose of determining the applicability of section 216(2), a vehicle which is self-propelled and capable of transporting a person or persons or any material or any permanently or temporarily affixed apparatus shall be deemed a motor vehicle, unless any one or more of the criteria set forth below are met, in which case the vehicle shall be deemed not a motor vehicle:

(1) The vehicle cannot exceed a maximum speed of 25 miles per hour over level, paved surfaces; or

(2) The vehicle lacks features customarily associated with safe and practical street or highway use, such features including, but not being limited to, a reverse gear (except in the case of motorcycles), a differential, or safety features required by state and/or federal law; or

(3) The vehicle exhibits features which render its use on a street or highway unsafe, impractical, or highly unlikely, such features including, but not being limited to, tracked road contact means, an inordinate size, or features ordinarily associated with military combat or tactical vehicles such as armor and/or weaponry.

(b) Note that, in applying the criterion in paragraph (a)(2) of this section, vehicles that are clearly intended for operation on highways are motor vehicles. Absence of a particular safety feature is relevant only when absence of that feature would prevent operation on highways.

[39 FR 32611, Sept. 10, 1974, as amended at 45 FR 13733, Mar. 3, 1980; 73 FR 59178, Oct. 8, 2008; 75 FR 22977, Apr. 30, 2010; 81 FR 73972, Oct. 25, 2016]

§ 85.1704 Who may request an exemption.

(a) Any person may request a testing exemption.

(b) Any manufacturer may request a national security exemption under § 85.1708.

(c) For manufacturers, vehicles or engines for export purposes are exempt without application, subject to the provisions of § 85.1709. For eligible manufacturers, as determined by § 85.1706, vehicles or engines for pre-certification purposes are exempt without application, subject to the provisions of § 85.1706(a).

[45 FR 13733, Mar. 3, 1980, as amended at 47 FR 30484, July 14, 1982]

§ 85.1705 Testing exemption.

(a) Any person requesting a testing exemption must demonstrate the following:

(1) That the proposed test program has a purpose which constitutes an appropriate basis for an exemption in accordance with section 203(b)(1);

(2) That the proposed test program necessitates the granting of an exemption;

(3) That the proposed test program exhibits reasonableness in scope; and

(4) That the proposed test program exhibits a degree of control consonant with the purpose of the program and the Environmental Protection Agency's (hereafter EPA) monitoring requirements. Paragraphs (b), (c), (d), and (e) of this section describe what constitutes a sufficient demonstration for each of the four above identified elements.

(b) With respect to the purpose of the proposed test program, an appropriate purpose is one which is consistent with one or more of the bases for exemption set forth under section 203(b)(1), namely, research, investigations, studies, demonstrations, or training, but not including national security. A concise statement of purpose is a required item of information.

(c) With respect to the necessity that an exemption be granted, necessity arises from an inability to achieve the stated purpose in a practicable manner without performing or causing to be performed one or more of the prohibited acts under section 203(a). In appropriate circumstances time constraints may be a sufficient basis for necessity, but the cost of certification alone, in the absence of extraordinary circumstances, is not a basis for necessity.

(d) With respect to reasonableness, a test program must exhibit a duration of reasonable length and affect a reasonable number of vehicles or engines. In this regard, required items of information include:

(1) An estimate of the program's duration;

(2) The maximum number of vehicles or engines involved; and

(e) With respect to control, the test program must incorporate procedures consistent with the purpose of the test and be capable of affording EPA monitoring capability. As a minimum, required items of information include:

(1) The technical nature of the test;

(2) The site of the test;

(3) The time or mileage duration of the test;

(4) The ownership arrangement with regard to the vehicles or engines involved in the test;

(5) The intended final disposition of the vehicles or engines;

(6) The manner in which vehicle identification numbers or the engine serial numbers will be identified, recorded, and made available; and

(7) The means or procedure whereby test results will be recorded.

(f) A manufacturer of new motor vehicles or new motor vehicle engines may request a testing exemption to cover any vehicles and/or engines intended for use in test programs planned or anticipated over the course of a subsequent one-year period. Unless otherwise required by the Director, Manufacturers Operations Division, a manufacturer requesting such an exemption need only furnish the information required by paragraphs (a)(1) and (d)(2) of this section along with a description of the recordkeeping and control procedures that will be employed to assure that the vehicles and/or engines are used for purposes consistent with section 203(b)(1).

[39 FR 32611, Sept. 10, 1974, as amended at 45 FR 13733, Mar. 3, 1980; 47 FR 30484, July 14, 1982]

§ 85.1706 Pre-certification exemption.

(a) Except as provided in paragraph (b) of this section, any pre-certification vehicle or pre-certification vehicle engine, as defined by § 85.1702(a) (3) or (4), is exempt from section 203(a), without application, if the manufacturer complies with the following terms and conditions:

(1) The manufacturer shall create, maintain, and make available at reasonable times for review or copying by appropriate EPA employees records which provide each vehicle identification or engine serial number, indicate the use of the vehicle or engine on exempt status and indicate the final disposition of any vehicle or engine removed from exempt status; and

(2) Unless the requirement is waived or an alternative procedure is approved by the Director, Manufacturers Operations Division, the manufacturer shall permanently affix to each vehicle or engine on exempt status in a readily visible portion of the engine compartment (on a readily visible portion of a heavy-duty engine or in a readily accessible position on a motorcycle) a label which cannot be removed without destruction or defacement and which states in the English language, in block letters and numerals of a color that contrasts with the background of the label, the following information:

(i) The label heading: Emission Control Information;

(ii) Full corporate name and trademark of manufacturer;

(iii) Engine displacement, engine family identification and model year of vehicle or engine; or person or office to be contacted for further information about the vehicle or engine;

(iv) The statement: THIS VEHICLE OR ENGINE IS EXEMPT FROM THE PROHIBITIONS OF SECTIONS 203(a)(1), (3) and (4) OF THE CLEAN AIR ACT, AS AMENDED.

(3) No provision of paragraph (a)(2) of this section shall prevent a manufacturer from including any other information it desires on the label.

(b) Any manufacturer that desires a pre-certification exemption and is in the business of importing, modifying or testing uncertified vehicles for resale under the provisions of 40 CFR 85.1501 through 85.1515, must send the request to the Designated Compliance Officer as specified in 40 CFR 1068.30. The Designated Compliance Officer may require such manufacturers to submit information regarding the general nature of the fleet activities, the number of vehicles involved, and a demonstration that adequate record-keeping procedures for control purposes will be employed.

[47 FR 30484, July 14, 1982, as amended at 81 FR 73972, Oct. 25, 2016]

§ 85.1707 Display exemption.

Where an uncertified vehicle or engine is a display vehicle or engine to be used solely for display purposes, will not be operated on the public streets or highways except for that operation incident and necessary to the display purpose, and will not be sold unless an applicable certificate of conformity has been received, no request for exemption of the vehicle or engine is necessary.

[39 FR 32611, Sept. 10, 1974. Redesignated and amended at 47 FR 30484, July 14, 1982]

§ 85.1708 National security exemption.

A manufacturer requesting a national security exemption must state the purpose for which the exemption is required and the request must be endorsed by an agency of the Federal Government charged with responsibility for national defense.

[39 FR 32611, Sept. 10, 1974. Redesignated at 47 FR 30484, July 14, 1982]

§ 85.1709 Export exemptions.

(a) A new motor vehicle or new motor vehicle engine intended solely for export, and so labeled or tagged on the outside of the container and on the vehicle or engine itself, shall be subject to the provisions of section 203(a) of the Act, unless the importing country has new motor vehicle emission standards which differ from the USEPA standards.

(b) For the purpose of paragraph (a) of this section, a country having no standards, whatsoever, is deemed to be a country having emission standards which differ from USEPA standards.

(c) EPA shall periodically publish in the FEDERAL REGISTER a list of foreign countries which have in force emissions standards identical to USEPA standards and have so notified EPA. New motor vehicles or new motor vehicle engines exported to such countries shall comply with USEPA certification regulations.

(d) It is a condition of any exemption for the purpose of export under section 203(b)(3) of the Act, that such exemption shall be void ab initio with respect to a new motor vehicle or new motor vehicle engine intended solely for export where:

(1) Such motor vehicle or motor vehicle engine is sold, or offered for sale, to an ultimate purchaser in the United States for purposes other than export; and

(2) The motor vehicle or motor vehicle engine manufacturer had reason to believe that any such vehicle would be sold or offered for sale as described in paragraph (d)(1) of this section.

[39 FR 32611, Sept. 10, 1974. Redesignated at 47 FR 30484, July 14, 1982]

§ 85.1710 Granting of exemptions.

(a) If upon completion of the review of an exemption request, as required by §§ 85.1705 and 85.1708, the granting of an exemption is deemed appropriate, a memorandum of exemption will be prepared and submitted to the person requesting the exemption. The memorandum will set forth the basis for the exemption, its scope, and such terms and conditions as are deemed necessary. Such terms and conditions will generally, include, but are not limited to, agreements by the applicant to conduct the exempt activity in the manner described to EPA, create and maintain adequate records accessible to EPA at reasonable times, employ labels for the exempt engines or vehicles setting forth the nature of the exemption, take appropriate measures to assure that the terms of the exemption are met, and advise EPA of the termination of the activity and the ultimate disposition of the vehicles or engines.

(b) Any exemption granted pursuant to paragraph (a) of this section shall be deemed to cover any subject vehicle or engine only to the extent that the specified terms and conditions are complied with. A breach of any term or condition shall cause the exemption to be void ab initio with respect to any vehicle or engine. Consequently, the causing or the performing of an act prohibited under sections 203(a) (1) or (3) of the Clean Air Act other than in strict conformity with all terms and conditions of this exemption shall render the person to whom the exemption is granted, and any other person to whom the provisions of section 203

are applicable, liable to suit under sections 204 and 205 of the Act.

[39 FR 32611, Sept. 10, 1974, as amended at 45 FR 13733, Mar. 3, 1980. Redesignated and amended at 47 FR 30485, July 14, 1982]

§ 85.1711 Submission of exemption requests.

Requests for exemption or further information concerning exemptions and/or the exemption request review procedure should be addressed to the Designated Compliance Officer as specified at 40 CFR 1068.30.

[81 FR 73972, Oct. 25, 2016]

§ 85.1712 Treatment of confidential information.

(a) Any person or manufacturer may assert that some or all of the information submitted pursuant to this subpart is entitled to confidential treatment as provided by 40 CFR part 2, subpart B.

(b) Any claim of confidentiality must accompany the information at the time it is submitted to EPA.

(c) To assert that information submitted pursuant to this subpart is confidential, a person or manufacturer must indicate clearly the items of information claimed confidential by marking, circling, bracketing, stamping, or otherwise specifying the confidential information. Furthermore, EPA requests, but does not require, that the submitter also provide a second copy of it submittal from which all confidential information has been deleted. If a need arises to publicly release nonconfidential information, EPA will assume that the submitter has accurately deleted the confidential information from this second copy.

(d) If a claim is made that some or all of the information submitted pursuant to ths subpart is entitled to confidential treatment, the information covered by that confidentiality claim will be disclosed by the Administrator only to the extent and by means of the procedures set forth in part 2, subpart B, of this chapter.

(e) Information provided without a claim of confidentiality at the time of submission may be made available to the public by EPA without further notice to the submitter, in accordance with 40 CFR 2.204(c)(2)(i)(A).

[50 FR 34797, Aug. 27, 1985]

§§ 85.1713✖85.1714 [Reserved]

§ 85.1715 Aircraft meeting the definition of motor vehicle.

This section applies for aircraft meeting the definition of motor vehicle in § 85.1703.

(a) For the purpose of this section, aircraft means any vehicle capable of sustained air travel above treetop heights.

(b) The standards, requirements, and prohibitions of 40 CFR part 86 do not apply for aircraft or aircraft engines. Standards apply separately to certain aircraft engines, as described in 40 CFR part 87.

[75 FR 22977, Apr. 30, 2010]

§ 85.1716 Approval of an emergency vehicle field modification (EVFM).

This section describes how you may implement design changes for an emergency vehicle that has already been placed into service to ensure that the vehicle will perform properly in emergency situations. This applies for any light-duty vehicle, light-duty truck, or heavy-duty vehicle meeting the definition of *emergency vehicle* in 40 CFR 86.004–2 or 86.1803. In this section, ''you'' refers to the certifying manufacturer and ''we'' refers to the EPA Administrator and any authorized representatives.

(a) You must notify us in writing of your intent to install or distribute an emergency vehicle field modification (EVFM). In some cases you may install or distribute an EVFM only with our advance approval, as specified in this section.

(b) Include in your notification a full description of the EVFM and any documentation to support your determination that the EVFM is necessary to prevent the vehicle from losing speed, torque, or power due to abnormal conditions of its emission control system, or to prevent such abnormal conditions from occurring during operation related to emergency response. Examples of such abnormal conditions may include excessive exhaust backpressure from an overloaded particulate trap, or

running out of diesel exhaust fluid for engines that rely on urea-based selective catalytic reduction. Your determination must be based on an engineering evaluation or testing or both.

(c) You may need our advance approval for your EVFM, as follows:

(1) Where the proposed EVFM is identical to an AECD we approved under this part for an engine family currently in production, no approval of the proposed EVFM is necessary.

(2) Where the proposed EVFM is for an engine family currently in production but the applicable demonstration is based on an AECD we approved under this part for an engine family no longer in production, you must describe to us how your proposed EVFM differs from the approved AECD. Unless we say otherwise, your proposed EVFM is deemed approved 30 days after you notify us.

(3) If we have not approved an EVFM comparable to the one you are proposing, you must get our approval before installing or distributing it. In this case, we may request additional information to support your determination under paragraph (b) of this section, as follows:

(i) If we request additional information and you do not provide it within 30 days after we ask, we may deem that you have retracted your request for our approval; however, we may extend this deadline for submitting the additional information.

(ii) We will deny your request if we determine that the EVFM is not necessary to prevent the vehicle from losing speed, torque, or power due abnormal conditions of the emission control system, or to prevent such abnormal conditions from occurring, during operation related to emergency response.

(iii) Unless we say otherwise, your proposed EVFM is deemed approved 30 days after we acknowledge that you have provided us with all the additional information we have specified.

(4) If your proposed EVFM is deemed to be approved under paragraph (c)(2) or (3) of this section and we find later that your EVFM in fact does not meet the requirements of this section, we may require you to no longer install or distribute it.

[77 FR 34145, June 8, 2012]

Subpart S—Recall Regulations

AUTHORITY: Sec. 301(a), Clean Air Act, 81 Stat. 504, as amended by sec. 15(c), 84 Stat. 1713 (42 U.S.C. 1857g(a)). The regulations implement sec. 207(c) (1)–(2), Clean Air Act, 84 Stat. 1697 (42 U.S.C. 1847f–5a(c)(1)–(2)); sec. 208(a), Clean Air Act, 81 Stat. 501, as renumbered by sec. 8(a), 84 Stat. 1694 (42 U.S.C. 1857f–6(a)).

SOURCE: 39 FR 44375, Dec. 23, 1974, unless otherwise noted.

§ 85.1801 Definitions.

For the purposes of this subpart, except as otherwise provided, words shall be defined as provided for by sections 214 and 302 of the Clean Air Act, 42 U.S.C. 1857, as amended.

(a) *Act* shall mean the Clean Air Act, 42 U.S.C. 1857, as amended.

(b) *Days* shall mean calendar days.

§ 85.1802 Notice to manufacturer of nonconformity; submission of Remedial Plan.

(a) A manufacturer will be notified whenever the Administrator has determined that a substantial number of a class or category of vehicles or engines produced by that manufacturer, although properly maintained and used, do not conform to the regulations prescribed under section 202 of the Act in effect during (and applicable to) the model year of such vehicle. The notification will include a description of each class or category of vehicles or engines encompassed by the determination of nonconformity, will give the factual basis for the determination of nonconformity (except information previously provided the manufacturer by the Agency), and will designate a date, no sooner than 45 days from the date of receipt of such notification, by which the manufacturer shall have submitted a plan to remedy the nonconformity.

(b) Unless a hearing is requested pursuant to § 85.1807, the remedial plan shall be submitted to the Administrator within the time limit specified in the Administrator's notification, provided that the Administrator may grant the manufacturer an extension upon good cause shown.

(c) If a manufacturer requests a public hearing pursuant to § 85.1807, unless

as a result of such hearing the Administrator withdraws his determination of nonconformity, the manufacturer shall submit the remedial plan within 30 days of the end of such hearing.

[39 FR 44375, Dec. 23, 1974, as amended at 42 FR 36456, July 15, 1977]

§ 85.1803 Remedial Plan.

(a) When any manufacturer is notified by the Administrator that a substantial number of any class or category of vehicles or engines, although properly maintained and used, do not conform to the regulations (including emission standards) or family particulate emission limits, as defined in part 86 promulgated under section 202 of the Act and in effect during (and applicable to) the model year of such class or classes of vehicles or engines, the manufacturer shall submit a plan to the Administrator to remedy such nonconformity. The plan shall contain the following:

(1) A description of each class or category of vehicle or engine to be recalled including the model year, the make, the model, and such other information as may be required to identify the vehicles or engines to be recalled.

(2) A description of the specific modifications, alterations, repairs, corrections, adjustments or other changes to be made to bring the vehicles or engines into conformity including a brief summary of the data and technical studies which support the manufacturer's decision as to the particular remedial changes to be used in correcting the nonconformity.

(3) A description of the method by which the manufacturer will determine the names and addresses of vehicle or engine owners.

(4) A description of the proper maintenance or use, if any, upon which the manufacturer conditions eligibility for repair under the remedial plan, an explanation of the manufacturer's reasons for imposing any such condition, and a description of the proof to be required of a vehicle or engine owner to demonstrate compliance with any such condition. Eligibility may not be denied solely on the basis that the vehicle or engine owner used parts not manufactured by the original equipment vehicle manufacturer, or had repairs performed by outlets other than the vehicle manufacturer's franchised dealers. No maintenance or use condition may be imposed unless it is, in the judgement of the Administrator, demonstrably related to preventing the nonconformity.

(5) A description of the procedure to be followed by vehicle or engine owners to obtain correction of the nonconformity. This shall include designation of the date on or after which the owner can have the nonconformity remedied, the time reasonably necessary to perform the labor required to correct the nonconformity, and the designation of facilities at which the nonconformity can be remedied: *Provided*, That repair shall be completed within a reasonable time designated by the Administrator from the date the owner first tenders his vehicle or engine after the date designated by the manufacturer as the date on or after which the owner can have the nonconformity remedied.

(6) If some or all of the nonconforming vehicles or engines are to be remedied by persons other than dealers or authorized warranty agents of the manufacturer, a description of the class of persons other than dealers and authorized warranty agents of the manufacturer who will remedy the nonconformity, and a statement indicating that the participating members of the class will be properly equipped to perform such remedial action.

(7) Three copies of the letters of notification to be sent to vehicle or engine owners.

(8) A description of the system by which the manufacturer will assure that an adequate supply of parts will be available to perform the repair under the remedial plan including the date by which an adequate supply of parts will be available to initiate the repair campaign, the percentage of the total parts requirement of each person who is to perform the repair under the remedial plan to be shipped to initiate the campaign, and the method to be used to assure the supply remains both adequate and responsive to owner demand.

(9) Three copies of all necessary instructions to be sent to those persons who are to perform the repair under the remedial plan.

(10) A description of the impact of the proposed changes on fuel consumption, driveability, and safety of each class or category of vehicles or engines to be recalled and a brief summary of the data, technical studies, or engineering evaluations which support these conclusions.

(11) Any other information, reports or data which the Administrator may reasonably determine is necessary to evaluate the remedial plan.

(b)(1) Notification to vehicle or engine owners shall be made by first class mail or by such means as approved by the Administrator: *Provided*, That for good cause, the Administrator may require the use of certified mail to ensure an effective notification.

(2) The manufacture shall use all reasonable means necessary to locate vehicle or engine owners: *Provided*, That for good cause, the Administrator may require the manufacturer to use motor vehicle registration lists as available from State or commercial sources to obtain the names and addresses of vehicle or engine owners to ensure an effective notification.

(3) The Administrator reserves the right to require the manufacturer to send by first class mail or other reasonable means subsequent notification to vehicle or engine owners: *Provided*, That for good cause, the Administrator may require the use of certified mail to ensure an effectctive notification.

(c)(1) The manufacturer shall require those who perform the repair under the remedial plan to affix a label to each vehicle or engine repaired or, when required, inspected under the remedial plan.

(2) The label shall be placed in such location as approved by the Administrator consistent with State law and shall be fabricated of a material suitable for the location in which it is installed and which is not readily removable intact.

(3) The label shall contain:

(i) The recall campaign number; and

(ii) A code designating the campaign facility at which the repair, or inspection for repair was performed.

(4) The Administrator reserves the right to waive any or all of the requirements of this paragraph if he determines that they constitute an unwarranted burden to the manufacturer.

(d) The Administrator may require the manufacturer to conduct tests on components and vehicles or engines incorporating a proposed change, repair, or modification reasonably designed and necessary to demonstrate the effectiveness of the change, repair, or modification.

NOTE: An interpretive ruling regarding § 85.1803 is published in appendix A to this subpart.

[39 FR 44375, Dec. 23, 1974, as amended at 40 FR 28067, July 3, 1975; 42 FR 36456, July 15, 1977; 45 FR 36398, May 30, 1980; 48 FR 33462, July 21, 1983]

§ 85.1804 Approval of Plan: Implementation.

(a) If the Administrator finds that the remedial plan is designed and effective to correct the nonconformity, he will so notify the manufacturer in writing. If the remedial plan is not approved, the Administrator will provide the manufacturer notice of the disapproval and the reasons for the disapproval in writing.

(b) Upon receipt of notice from the Administrator that the remedial plan has been approved, the manufacturer shall commence implementation of the approved plan. Notification of vehicle or engine owners shall be in accordance with requirements of this subpart and shall proceed as follows:

(1) When no public hearing as described in § 85.1807 is requested by the manufacturer, notification of vehicles or engine owners shall commence within 15 working days of the receipt by the manufacturer of the Administrator's approval unless otherwise specified by the Administrator.

(2) When a public hearing as described in § 85.1807 is held, unless as a result of such hearing the Administrator withdraws the determination of nonconformity, the Administrator shall, within 60 days after the completion of such hearing, order the manufacturer to provide prompt notification of such nonconformity.

§ 85.1805 Notification to vehicle or engine owners.

(a) The notification of vehicle or engine owners shall contain the following:

(1) The statement: ''The Administrator of the U.S. Environmental Protection Agency has determined that your vehicle or engine may be emitting pollutants in excess of the Federal emission standards or family particulate emission limits, as defined in part 86. These standards or family particulate emission limits, as defined in part 86 were established to protect the public health or welfare from the dangers of air pollution.''

(2) A statement that the nonconformity of any such vehicles or engines which have been, if required by the remedial plan, properly maintained and used, will be remedied at the expense of the manufacturer.

(3) A description of the proper maintenance or use, if any, upon which the manufacturer conditions eligibility for repair under the remedial plan and a description of the proof to be required of a vehicle or engine owner to demonstrate compliance with such condition. Eligibility may not be denied solely on the basis that the vehicle or engine owner used parts not manufactured by the original equipment vehicle manufacturer, or had repairs performed by outlets other than the vehicle manufacturer's franchised dealers.

(4) A clear description of the components which will be affected by the remedy and a general statement of the measures to be taken to correct the nonconformity.

(5) A statement that such nonconformity if not repaired may cause the vehicle or engine to fail an emission inspection test when such tests are required under State or local law.

(6) A description of the adverse affects, if any, that an uncorrected nonconformity would have on the performance or driveability of the vehicle or engine.

(7) A description of the adverse affects, if any, that such nonconformity would have on the functions of other engine components.

(8) A description of the procedure which the vehicle or engine owner should follow to obtain correction of the nonconformity. This shall include designation of the date on or after which the owner can have the nonconformity remedied, the time reasonably necessary to perform the labor required to correct the nonconformity, and the designation of facilities at which the nonconformity can be remedied.

(9) A card to be used by a vehicle or engine owner in the event the vehicle or engine to be recalled has been sold. Such card should be addressed to the manufacturer and shall provide a space in which the owner may indicate the name and address of the person to whom the vehicle or engine was sold.

(10) The statement: ''In order to ensure your full protection under the emission warranty made applicable to your (vehicle or engine) by Federal law, and your right to participate in future recalls, it is recommended that you have (vehicle or engine) serviced as soon as possible. Failure to do so could legally be determined to be a lack of proper maintenance of your (vehicle or engine).''

(b) No notice sent pursuant to paragraph (a) of this section nor any other contemporaneous communication sent to vehicle or engine owners or dealers shall contain any statement or implication that the nonconformity does not exist or that the nonconformity will not degrade air quality.

(c) The manufacturer shall be informed of any other requirements pertaining to the notification under this section which the Administrator has determined are reasonable and necessary to ensure the effectiveness of the recall campaign.

[39 FR 44375, Dec. 23, 1974, as amended at 48 FR 33462, July 21, 1983]

§ 85.1806 Records and reports.

(a) The manufacturer shall provide to the Administrator a copy of all communications which relate to the remedial plan directed to dealers and other persons who are to perform the repair under the remedial plan. Such copies shall be mailed to the Administrator contemporaneously with their transmission to dealers and other persons who are to perform the repair under the remedial plan.

(b) The manufacturer shall provide for the establishment and maintenance

of records to enable the Administrator to conduct a continuing analysis of the adequacy of the recall campaign. The records shall include, for each class or category of vehicle or engine, but need not be limited to, the following:

(1) Recall campaign number as designated by the manufacturer.

(2) Date owner notification was begun, and date completed.

(3) Number of vehicles or engines involved in the recall campaign.

(4) Number of vehicles or engines known or estimated to be affected by the nonconformity.

(5) Number of vehicles or engines inspected pursuant to the remedial plan.

(6) Number of inspected vehicles found to be affected by the nonconformity.

(7) Number of vehicles actually receiving repair under the remedial plan.

(8) Number of vehicles determined to be unavailable for inspection or repair under the remedial plan due to exportation, theft, scrapping or for other reasons (specify).

(9) Number of vehicles or engines determined to be ineligible for remedial action due to a failure to properly maintain or use such vehicles or engines.

(c) If the manufacturer determines that the original answers for paragraphs (b) (3) and (4) of this section are incorrect, revised figures and an explanatory note shall be submitted. Answers to paragraphs (b) (5), (6), (7), and (8), and (9) of this section shall be cumulative totals.

(d) Unless otherwise directed by the Administrator, the information specified in paragraph (b) of this section shall be included in quarterly reports, with respect to each recall campaign, for six consecutive quarters beginning with the quarter in which the notification of owners was initiated, or until all nonconforming vehicles or engines involved in the campaign have been remedied, whichever occurs sooner. Such reports shall be submitted no later than 25 working days after the close of each calendar quarter.

(e) The manufacturer shall maintain in a form suitable for inspection, such as computer information storage devices or card files, lists of the names and addresses of vehicles or engine owners.

(1) To whom notification was given;

(2) Who received remedial repair or inspection under the remedial plan; and

(3) When eligibility for repair is conditioned on proper maintenance or use, that were determined not to qualify for such remedial action.

(f) The records described in paragraph (e) of this section shall be made available to the Administrator upon request.

(g) The records and reports required by this section shall be retained for not less than 5 years.

[39 FR 44375, Dec. 23, 1974; 40 FR 3447, Jan. 22, 1975]

§ 85.1807 Public hearings.

(a) *Definitions.* The following definitions shall be applicable to this section:

(1) ''Hearing Clerk'' shall mean the Hearing Clerk of the Environmental Protection Agency.

(2) ''Intervener'' shall mean a person who files a petition to be made an intervener pursuant to paragraph (g) of this section and whose petition is approved.

(3) ''Manufacturer'' refers to a manufacturer contesting a recall order directed at that manufacturer.

(4) ''Party'' shall include the Environmental Protection Agency, the manufacturer, and any interveners.

(5) ''Presiding Officer'' shall mean an Administrative Law Judge appointed pursuant to 5 U.S.C. 3105 (see also 5 CFR part 930 as amended).

(6) ''Environmental Appeals Board'' shall mean the Board within the Agency described in § 1.25 of this title. The Administrator delegates authority to the Environmental Appeals Board to issue final decisions in appeals filed under this subpart. Appeals directed to the Administrator, rather than to the Environmental Appeals Board, will not be considered. This delegation of authority to the Environmental Appeals Board does not preclude the Environmental Appeals Board from referring an appeal or a motion filed under this subpart to the Administrator for decision when the Environmental Appeals

Board, in its discretion, deems it appropriate to do so. When an appeal or motion is referred to the Administrator, all parties shall be so notified and the rules in this part referring to the Environmental Appeals Board shall be interpreted as referring to the Administrator.

(b) *Request for public hearing.* (1)(i) If the manufacturer disagrees with the Administrator's finding of nonconformity he may request a public hearing as described in this section. Requests for such a hearing shall be filed with the Administrator not later than 45 days after the receipt of the Administrator's notification of nonconformity unless otherwise specified by the Administrator. Two copies of such request shall simultaneously be served upon the Director of the Manufacturers Operations Division and two copies filed with the Hearing Clerk. Failure of the manufacturer to request a hearing within the time provided shall constitute a waiver of his right to such a hearing. In such a case, the manufacturer shall carry out the recall order as required by § 85.1803–6.

(ii) Subsequent to the expiration of the period for requesting a hearing as of right, the Administrator may, in his discretion and for good cause shown, grant the manufacturer a hearing to contest the nonconformity.

(2) The request for a public hearing shall contain:

(i) A statement as to which classes or categories of vehicles or engines are to be the subject of the hearing;

(ii) A concise statement of the issues to be raised by the manufacturer at the hearing for each class or category of engine or vehicle for which the manufacturer has requested the hearing; and

(iii) A statement as to reasons the manufacturer believes he will prevail on the merits on each of the issues so raised.

(3) A copy of all requests for public hearings shall be kept on file in the Office of the Hearing Clerk and shall be made available to the public during Agency business hours.

(c) *Filing and service.* (1) An original and two copies of all documents or papers required or permitted to be filed pursuant to this section shall be filed with the Hearing Clerk. Filing shall be deemed timely if mailed, as determined by the postmark, to the Hearing Clerk within the time allowed by this section. If filing is to be accomplished by mailing, the documents shall be sent to the address set forth in the notice of public hearing as described in paragraph (f) of this section.

(2) Except for requests to commence a hearing, at the same time a party files with the Hearing Clerk any additional issues for consideration at the hearing or any written testimony, documents, papers, exhibits, or materials, proposed to be introduced into evidence or papers filed in connection with any appeal, it shall serve upon all other parties copies thereof. A certificate of service shall be provided on or accompany each document or paper filed with the Hearing Clerk. Documents to be served upon the Director of the Manufacturers Operations Division shall be mailed to: Director, Manufacturers Operations Division, U.S. Environmental Protection Agency (EG–340), 1200 Pennsylvania Ave., NW., WSM, Washington, DC 20460. Service by mail is complete upon mailing.

(d) *Time.* (1) In computing any period of time prescribed or allowed by this section, except as otherwise provided, the day of the act or event from which the designated period of time begins to run shall not be included. Saturdays, Sundays, and Federal legal holidays shall be included in computing any such period allowed for the filing of any document or paper, except that when such period expires on a Saturday, Sunday, or Federal legal holiday, such period shall be extended to include the next following business day.

(2) A prescribed period of time within which a party is required or permitted to do an act shall be computed from the time of service, except that when service is accomplished by mail, three days shall be added to the prescribed period.

(e) *Consolidation.* The Administrator or the Presiding Officer in his discretion may consolidate two or more proceedings to be held under this section for the purpose of resolving one or more issues whenever it appears that such consolidation will expedite or simplify consideration of such issues. Consolidation shall not affect the right

of any party to raise issues that could have been raised if consolidation had not occurred.

(f) *Notice of public hearings.* (1) Notice of a public hearing under this section shall be given by publication in the FEDERAL REGISTER. Notice will be given at least 30 days prior to the commencement of such hearings.

(2) The notice of a public hearing shall include the following information:

(i) The purpose of the hearing and the legal authority under which the hearing is to be held;

(ii) A brief summary of the Administrator's determination of nonconformity;

(iii) A brief summary of the manufacturer's basis for contesting the Administrator's determination of nonconformity;

(iv) Information regarding the time and location of the hearing and the address to which all documents required or permitted to be filed should be sent;

(v) The address of the Hearing Clerk to whom all inquiries should be directed and with whom documents are required to be filed;

(vi) A statement that all petitions to be made an intervener must be filed with the Hearing Clerk within 25 days from the date of the notice of public hearing and must conform to the requirements of paragraph (g) of this section.

(3) The notice of public hearing shall be issued by the Assistant Administrator for Enforcement and General Counsel.

(g) *Interveners.* (1) Any person desiring to intervene in a hearing to be held under section 207(c)(1) of the Act shall file a petition setting forth the facts and reasons why he thinks he should be permitted to intervene.

(2) In passing upon a petition to intervene, the following factors, among other things, shall be considered by the Presiding Officer:

(i) The nature of the petitioner's interest including the nature and the extent of the property, financial, environmental protection, or other interest of the petitioner;

(ii) The effect of the order which may be entered in the proceeding on petitioner's interest;

(iii) The extent to which the petitioner's interest will be represented by existing parties or may be protected by other means;

(iv) The extent to which petitioner's participation may reasonably be expected to assist materially in the development of a complete record;

(v) The effect of the intervention on the Agency's statutory mandate.

(3) A petition to intervene must be filed within 25 days following the notice of public hearing under section 207(c) (1) of the Act and shall be served on all parties. Any opposition to such petition must be filed within five days of such service.

(4) All petitions to be made an intervener shall be reviewed by the Presiding Officer using the criteria set forth in paragraph (g)(2) of this section and considering any oppositions to such petition. Where the petition demonstrates that the petitioner's interest is limited to particular issues, the Presiding Officer may, in granting such petition, limit petitioner's participation to those particular issues only.

(5) If the Presiding Officer grants the petition with respect to any or all issues, he shall so notify, or direct the Hearing Clerk to notify, the petitioner and all parties. If the Presiding Officer denies the petition he shall so notify, or direct the Hearing Clerk to notify, the petitioner and all parties and shall briefly state the reasons why the petition was denied.

(6) All petitions to be made an intervener shall include an agreement by the petitioner, and any person represented by the petitioner, to be subject to examination and cross-examination and to make any supporting and relevant records available at its own expense upon the request of the Presiding Officer, on his own motion or the motion of any party or other intervener. If the intervener fails to comply with any such request, the Presiding Officer may in his discretion, terminate his status as an intervener.

(h) *Intervention by motion.* Following the expiration of the time prescribed in paragraph (g) of this section for the submission of petitions to intervene in a hearing, any person may file a motion with the Presiding Officer to intervene in a hearing. Such a motion

must contain the information and commitments required by paragraphs (g)(2) and (6) of this section, and, in addition, must show that there is good cause for granting the motion and must contain a statement that the intervener shall be bound by agreements, arrangements, and other determinations which may have been made in the proceeding.

(i) *Amicus Curiae*. Persons not parties to the proceedings wishing to file briefs may do so by leave of the Presiding Officer granted on motion. A motion for leave shall identify the interest of the applicant and shall state the reasons why the proposed amicus brief is desirable.

(j) *Presiding Officer*. The Presiding Officer shall have the duty to conduct a fair and impartial hearing in accordance with 5 U.S.C. 554, 556 and 557, to take all necessary action to avoid delay in the disposition of the proceedings and to maintain order. He shall have all power consistent with Agency rule and with the Administrative Procedure Act necessary to this end, including the following:

(1) To administer oaths and affirmations;

(2) To rule upon offers of proof and receive relevant evidence;

(3) To regulate the course of the hearings and the conduct of the parties and their counsel therein;

(4) To hold conferences for simplification of the issues or any other proper purpose;

(5) To consider and rule upon all procedural and other motions appropriate in such proceedings;

(6) To require the submission of direct testimony in written form with or without affidavit whenever, in the opinion of the Presiding Officer, oral testimony is not necessary for full and true disclosure of the facts. Testimony concerning the conduct and results of tests and inspections may be submitted in written form.

(7) To enforce agreements and orders requiring access as authorized by law;

(8) To require the filing of briefs on any matter on which he is required to rule;

(9) To require any party or any witness, during the course of the hearing, to state his position on any issue;

(10) To take or cause depositions to be taken whenever the ends of justice would be served thereby;

(11) To make decisions or recommend decisions to resolve the disputed issues of the record of the hearing.

(12) To issue, upon good cause shown, protective orders as described in paragraph (n) of this section.

(k) *Conferences*. (1) At the discretion of the Presiding Officer, conferences may be held prior to or during any hearing. The Presiding Officer shall direct the Hearing Clerk to notify all parties and interveners of the time and location of any such conference. At the discretion of the Presiding Officer, persons other than parties may attend. At a conference the Presiding Officer may:

(i) Obtain stipulations and admissions, receive requests and order depositions to be taken, identify disputed issues of fact and law, and require or allow the submission of written testimony from any witness or party;

(ii) Set a hearing schedule for as many of the following as are deemed necessary by the Presiding Officer:

(A) Oral and written statements;

(B) Submission of written direct testimony as required or authorized by the Presiding Officer;

(C) Oral direct and cross-examination of a witness where necessary as prescribed in paragraph (p) of this section;

(D) Oral argument, if appropriate.

(iii) Identify matters of which official notice may be taken;

(iv) Consider limitation of the number of expert and other witnesses;

(v) Consider the procedure to be followed at the hearing; and

(vi) Consider any other matter that may expedite the hearing or aid in the disposition of the issue.

(2) The results of any conference including all stipulations shall, if not transcribed, be summarized in writing by the Presiding Officer and made part of the record.

(l) *Primary discovery (exchange of witness lists and documents)*. (1) At a prehearing conference or within some reasonable time set by the Presiding Officer prior to the hearing, each party shall make available to the other parties the names of the expert and other witnesses the party expects to call, together with a brief summary of their

expected testimony and a list of all documents and exhibits which the party expects to introduce into evidence. Thereafter, witnesses, documents, or exhibits may be added and summaries of expected testimony amended upon motion by a party.

(2) The Presiding Officer, may, upon motion by a party or other person, and for good cause shown, by order (i) restrict or defer disclosure by a party of the name of a witness or a narrative summary of the expected testimony of a witness, and (ii) prescribe other appropriate measures to protect a witness. Any party affected by any such action shall have an adequate opportunity, once he learns the name of a witness and obtains the narrative summary of his expected testimony, to prepare for the presentation of his case.

(m) *Other discovery*. (1) Except as so provided by paragraph (l) of this section, further discovery, under this paragraph, shall be permitted only upon determination by the Presiding Officer:

(i) That such discovery will not in any way unreasonably delay the proceeding;

(ii) That the information to be obtained is not obtainable voluntarily; and

(iii) That such information has significant probative value. The Presiding Officer shall be guided by the procedures set forth in the Federal Rules of Civil Procedure, where practicable, and the precedents thereunder, except that no discovery shall be undertaken except upon order of the Presiding Officer or upon agreement of the parties.

(2) The Presiding Officer shall order depositions upon oral questions only upon a showing of good cause and upon a finding that:

(i) The information sought cannot be obtained by alternative methods; or

(ii) There is a substantial reason to believe that relevant and probative evidence may otherwise not be preserved for presentation by a witness at the hearing.

(3) Any party to the proceeding desiring an order of discovery shall make a motion or motions therefor. Such a motion shall set forth:

(i) The circumstances warranting the taking of the discovery;

(ii) The nature of the information expected to be discovered; and

(iii) The proposed time and place where it will be taken. If the Presiding Officer determines the motion should be granted, he shall issue an order for the taking of such discovery together with the conditions and terms thereof.

(4) Failure to comply with an order issued pursuant to this paragraph may lead to the inference that the information to be discovered would be adverse to the person or party from whom the information was sought.

(n) *Protective orders: in camera proceedings*. (1) Upon motion by a party or by the person from whom discovery is sought, and upon a showing by the movant that the disclosure of the information to be discovered, or a particular part thereof, (other than emission data) would result in methods or processes entitled to protection as trade secrets of such person being divulged, the Presiding Officer may enter a protective order with respect to such material. Any protective order shall contain such terms governing the treatment of the information as may be appropriate under the circumstances to prevent disclosure outside the hearing: *Provided*, That the order shall state that the material shall be filed separately from other evidence and exhibits in the hearing. Disclosure shall be limited to parties to the hearing, their counsel and relevant technical consultants, and authorized representatives of the United States concerned with carrying out the Act. Except in the case of the government, disclosure may be limited to counsel to parties who shall not disclose such information to the parties themselves. Except in the case of the government, disclosure to a party or his counsel shall be conditioned on execution of a sworn statement that no disclosure of the information will be made to persons not entitled to receive it under the terms of the protective order. (No such provision is necessary where government employees are concerned because disclosure by them is subject to the terms of 18 U.S.C. 1905.)

(2)(i) A party or person seeking a protective order may be permitted to make all or part of the required showing in camera. A record shall be made

of such in camera proceedings. If the Presiding Officer enters a protective order following a showing in camera, the record of such showing shall be sealed and preserved and made available to the Agency or court in the event of appeal.

(ii) Attendance at any in camera proceeding may be limited to the Presiding Officer, the Agency, and the person or party seeking the protective order.

(3) Any party, subject to the terms and conditions of any protective order issued pursuant to paragraph (n)(1) of this section, desiring for the presentation of his case to make use of any in camera documents or testimony shall make application to the Presiding Officer by motion setting forth the justification therefor. The Presiding Officer, in granting any such motion, shall enter an order protecting the rights of the affected persons and parties and preventing unnecessary disclosure of such information, including the presentation of such information and oral testimony and cross-examination concerning it in executive session, as in his discretion is necessary and practicable.

(4) In the submittal of proposed findings, briefs, or other papers, counsel for all parties shall make a good faith attempt to refrain from disclosing the specific details of *in camera* documents and testimony. This shall not preclude references in such proposed findings, briefs, or other papers to such documents or testimony including generalized statements based on their contents. To the extent that counsel consider it necessary to include specific details in their presentations, such data shall be incorporated in separate proposed findings, briefs, or other papers marked ''confidential'', which shall become part of the *in camera* record.

(o) *Motions.* (1) All motions, except those made orally during the course of the hearing, shall be in writing and shall state with particularity the grounds therefor, shall set forth the relief or order sought, and shall be filed with the Hearing Clerk and served upon all parties.

(2) Within ten days after service of any motion filed pursuant to this section, or within such other time as may be fixed by the Environmental Appeals Board or the Presiding Officer, as appropriate, any party may serve and file an answer to the motion. The movant shall, if requested by the Environmental Appeals Board or the Presiding Officer, as appropriate, serve and file reply papers within the time set by the request.

(3) The Presiding Officer shall rule upon all motions filed or made prior to the filing of his decision or accelerated decision, as appropriate. The Environmental Appeals Board shall rule upon all motions filed prior to the appointment of a Presiding Officer and all motions filed after the filing of the decision of the Presiding Officer or accelerated decision. Oral argument of motions will be permitted only if the Presiding Officer or the Environmental Appeals Board, as appropriate, deems it necessary.

(p) *Evidence.* (1) The official transcripts and exhibits, together with all papers and requests filed in the proceeding, shall constitute the record. Immaterial or irrelevant parts of an admissible document shall be segregated and excluded so far as practicable. Documents or parts thereof subject to a protective order under paragraph (n) of this section shall be segregated. Evidence may be received at the hearing even though inadmissible under the rules of evidence applicable to judicial proceedings. The weight to be given evidence shall be determined by its reliability and probative value.

(2) The Presiding Officer shall allow the parties to examine and to cross-examine a witness to the extent that such examination and cross-examination is necessary for a full and true disclosure of the facts.

(3) Rulings of the Presiding Officer on the admissibility of evidence, the propriety of examination and cross-examination and other procedural matters shall appear in the record.

(4) Parties shall automatically be presumed to have taken exception to an adverse ruling.

(q) *Interlocutory appeal.* (1) An interlocutory appeal may be taken to the Environmental Appeals Board either (i)

with the consent of the Presiding Officer and where he certifies on the record or in writing that the allowance of an interlocutory appeal is clearly necessary to prevent exceptional delay, expense or prejudice to any party or substantial detriment to the public interest, or (ii) absent the consent of the Presiding Officer, by permission of the Environmental Appeals Board.

(2) Applications for interlocutory appeal of any ruling or order of the Presiding Officer may be filed with the Presiding Officer within 5 days of the issuance of the ruling or order being appealed. Answers thereto by other parties may be filed within 5 days of the service of such applications.

(3) The Presiding Officer shall rule on such applications within 5 days of the filing of such application or answers thereto.

(4) Applications to file such appeals absent consent of the Presiding Officer shall be filed with the Environmental Appeals Board within 5 days of the denial of any appeal by the Presiding Officer.

(5) The Environmental Appeals Board will consider the merits of the appeal on the application and any answers thereto. No oral argument will be heard nor other briefs filed unless the Environmental Appeals Board directs otherwise.

(6) Except under extraordinary circumstances as determined by the Presiding Officer, the taking of an interlocutory appeal will not stay the hearing.

(r) *Record*. (1) Hearings shall be stenographically reported and transcribed, and the original transcript shall be part of the record and the sole official transcript. Copies of the record shall be filed with the Hearing Clerk and made available during Agency business hours for public inspection. Any person desiring a copy of the record of the hearing or any part thereof shall be entitled to the same upon payment of the cost thereof.

(2) The official transcripts and exhibits, together with all papers and requests filed in the proceeding, shall constitute the record.

(s) *Proposed findings, conclusions*. (1) Within 20 days of the close of the reception of evidence, or within such longer time as may be fixed by the Presiding Officer, any party may submit for the consideration of the Presiding Officer proposed findings of fact, conclusions of law, and a proposed rule or order, together with reasons therefor and briefs in support thereof. Such proposals shall be in writing, shall be served upon all parties, and shall contain adequate references to the record and authorities relied on.

(2) The record shall show the Presiding Officer's ruling on the proposed findings and conclusions except when his order disposing of the proceeding otherwise informs the parties of the action taken by him thereon.

(t) *Decision of the Presiding Officer*. (1) Unless extended by the Environmental Appeals Board, the Presiding Officer shall issue and file with the Hearing Clerk his decision within 30 days after the period for filing proposed findings as provided for in paragraph (s) of this section has expired.

(2) The Presiding Officer's decision shall become the opinion of the Environmental Appeals Board (i) when no notice of intention to appeal as described in paragraph (u) of this section is filed, 30 days after the issuance thereof, unless in the interim the Environmental Appeals Board shall have taken action to review or stay the effective date of the decision; or (ii) when a notice of intention to appeal is filed but the appeal is not perfected as required by paragraph (u) of this section, 5 days after the period allowed for perfection of an appeal has expired unless within that 5 day period, the Environmental Appeals Board shall have taken action to review or stay the effective date of the decision.

(3) The Presiding Officer's decision shall include a statement of findings and conclusions, as well as the reasons or basis therefor, upon all the material issues of fact or law presented on the record and an appropriate rule or order. Such decision shall be supported by substantial evidence and based upon a consideration of the whole record.

(4) At any time prior to the issuance of his decision, the Presiding Officer may reopen the proceeding for the reception of further evidence. Except for the correction of clerical errors, the jurisdiction of the Presiding Officer is

terminated upon the issuance of his decision.

(u) *Appeal from the Decision of the Presiding Officer.* (1) Any party to a proceeding may appeal the Presiding Officer's decision to the Environmental Appeals Board, *Provided,* That within 10 days after issuance of the Presiding Officer's decision such party files a notice of intention to appeal and an appeal brief within 30 days of such decision.

(2) When an appeal is taken from the decision of the Presiding Officer, any party may file a brief with respect to such appeal. The brief shall be filed within 20 days of the date of the filing of the appellant's brief.

(3) Any brief filed pursuant to this paragraph shall contain in the order indicated, the following:

(i) A subject index of the matter in the brief, with page references, and a table of cases (alphabetically arranged), textbooks, statutes, and other material cited, with page references thereto;

(ii) A specification of the issues intended to be urged;

(iii) The argument presenting clearly the points of fact and law relied upon in support of the position taken on each issue, with specific page references to the record and the legal or other material relied upon; and

(iv) A proposed form of rule or order for the Environmental Appeals Board's consideration if different from the rule or order contained in the Presiding Officer's decision.

(4) No brief in excess of 40 pages shall be filed without leave of the Environmental Appeals Board.

(5) Oral argument will be allowed in the discretion of the Environmental Appeals Board.

(v) *Review of the Presiding Officer's Decision in Absence of Appeal.* (1) If, after the expiration of the period for taking an appeal as provided for by paragraph (u) of this section, no notice of intention to appeal the decision of the Presiding Officer has been filed, or if filed, not perfected, the Hearing Clerk shall so notify the Environmental Appeals Board.

(2) The Environmental Appeals Board, upon receipt of notice from the Hearing Clerk that no notice of intention to appeal has been filed, or if filed, not perfected pursuant to paragraph (u) of this section, may, on its own motion, within the time limits specified in paragraph (t)(2) of this section, review the decision of the Presiding Officer. Notice of the intention of the Environmental Appeals Board to review the decision of the Presiding Officer shall be given to all parties and shall set forth the scope of such review and the issue which shall be considered and shall make provision for filing of briefs.

(w) *Decision on appeal or review.* (1) Upon appeal from or review of the Presiding Officer's decision, the Environmental Appeals Board shall consider such parts of the record as are cited or as may be necessary to resolve the issues presented and, in addition shall to the extent necessary or desirable exercise all the powers which it could have exercised if it had presided at the hearing.

(2) In rendering its decision, the Environmental Appeals Board shall adopt, modify, or set aside the findings, conclusions, and rule or order contained in the decision of the Presiding Officer and shall set forth in its decision a statement of the reasons or bases for its action.

(3) In those cases where the Environmental Appeals Board determines that it should have further information or additional views of the parties as to the form and content of the rule or order to be issued, the Environmental Appeals Board, in its discretion, may withhold final action pending the receipt of such additional information or views, or may remand the case to the Presiding Officer.

(x) *Reconsideration.* Within twenty (20) days after issuance of the Environmental Appeals Board's decision, any party may file with the Environmental Appeals Board a petition for reconsideration of such decision, setting forth the relief desired and the grounds in support thereof. Any petition filed under this subsection must be confined to new questions raised by the decision or the final order and upon which the petitioner had no opportunity to argue before the Presiding Officer or the Environmental Appeals Board. Any party desiring to oppose such a petition shall

file and answer thereto within ten (10) days after the filing of the petition. The filing of a petition for reconsideration shall not operate to stay the effective date of the decision or order or to toll the running of any statutory time period affecting such decision or order unless specifically so ordered by the Environmental Appeals Board.

(y) *Accelerated decision: Dismissal.* (1) The Presiding Officer, upon motion of any party or *sua sponte*, may at any time render an accelerated decision in favor of the Agency or the manufacturer as to all or any part of the proceeding, without further hearing or upon such limited additional evidence such as affidavits as he may require, or dismiss any party with prejudice, under any of the following conditions:

(i) Failure to state a claim upon which relief can be granted, or direct or collateral estoppel;

(ii) There is no genuine issue of material fact and a party is entitled to judgment as a matter of law; or

(iii) Such other and further reasons as are just, including specifically failure to obey a procedural order of the Presiding Officer.

(2) If under this paragraph an accelerated decision is issued as to all the issues and claims joined in the proceeding, the decision shall be treated for the purposes of these procedures as the decision of the Presiding Officer as provided in paragraph (p) of this section.

(3) If under this paragraph, judgment is rendered on less than all issues or claims in the proceeding, the Presiding Officer shall determine what material facts exist without substantial controversy and what material facts are actually and in good faith controverted. He shall thereupon issue an order specifying the facts which appear without substantial controversy, and the issues and claims upon which the hearing will proceed.

(z) *Conclusion of hearing.* (1) If, after the expiration of the period for taking an appeal as provided for by paragraph (u) of this section, no appeal has been taken from the Presiding Officer's decision, and, after the expiration of the period for review by the Environmental Appeals Board on its own motion as provided for by paragraph (v) of this section, the Environmental Appeals Board does not move to review such decision, the hearing will be deemed to have ended at the expiration of all periods allowed for such appeal and review.

(2) If an appeal of the Presiding Officer's decision is taken pursuant to paragraph (u) of this section, or if, in the absence of such appeal, the Environmental Appeals Board moves to review the decision of the Presiding Officer pursuant to paragraph (v) of this section, the hearing will be deemed to have ended upon the rendering of a final decision by the Environmental Appeals Board.

(aa) *Judicial Review.* (1) The Administrator hereby designates the Deputy General Counsel, Environmental Protection Agency as the officer upon whom copy of any petition for judicial review shall be served.

Such officer shall be responsible for filing in the court the record on which the order of the Environmental Appeals Board is based.

(2) Before forwarding the record to the court, the Agency shall advise the petitioner of costs of preparing it and as soon as payment to cover fees is made shall forward the record to the court.

[39 FR 44375, Dec. 23, 1974; 40 FR 3447, Jan. 22, 1975, as amended at 44 FR 61962, Oct. 29, 1979; 57 FR 5329, Feb. 13, 1992]

§ 85.1808 Treatment of confidential information.

(a) Any manufacturer may assert that some or all of the information submitted pursuant to this subpart is entitled to confidential treatment as provided by 40 CFR part 2, subpart B.

(b) Any claim of confidentiality must accompany the information at the time it is submitted to EPA.

(c) To assert that information submitted pursuant to this subpart is confidential, a person or manufacturer must indicate clearly the items of information claimed confidential by marking, circling bracketing, stamping, or otherwise specifying the confidential information. Furthermore, EPA requests, but does not require, that the submitter also provide a second copy of its submittal from which all confidential information has been

deleted. If a need arises to publicly release nonconfidential information, EPA will assume that the submitter has accurately deleted the confidential information from this second copy.

(d) If a claim is made that some or all of the information submitted pursuant to this subpart is entitled to confidential treatment, the information covered by that confidentiality claim will be disclosed by the Environmental Appeals Board only to the extent and by means of the procedures set forth in part 2, subpart B, of this chapter.

(e) Information provided without a claim of confidentiality at the time of submission may be made available to the public by EPA without further notice to the submitter, in accordance with 40 CFR 2.204(c)(2)(i)(A).

[50 FR 34797, Aug. 27, 1985, as amended at 57 FR 5330, Feb. 13, 1992]

APPENDIX A TO SUBPART S OF PART 85—INTERPRETIVE RULING FOR § 85.1803—REMEDIAL PLANS

The purpose of this rule is to set forth EPA's interpretation regarding one aspect of a motor vehicle or motor vehicle engine manufacturer's recall liability under section 207(c)(1) of the Clean Air Act, 42 U.S.C. 7641(c)(1). This rule will provide guidance to vehicle and engine manufacturers to better enable them to submit acceptable remedial plans.

Section 207(c)(1) requires the Administrator to base a recall order on a determination that a substantial number of in-use vehicles or engines within a given class or category of vehicles or engines, although properly maintained and used, fail to conform to the regulations prescribed under section 202 when in actual use throughout their useful lives. After making such a determination, he shall require the manufacturer to submit a plan to remedy the nonconformity of any such vehicles or engines. The plan shall provide that the manufacturer will remedy, at the manufacturer's expense, all properly maintained and used vehicles which experienced the nonconformity during their useful lives regardless of their age or mileage at the time of repair.

(Secs. 207 and 301(a), Clean Air Act, as amended, 42 U.S.C. 7541 and 7601(a))

[45 FR 36398, May 30, 1980]

Subpart T—Emission Defect Reporting Requirements

AUTHORITY: Secs. 208(a) and 301(a), Clean Air Act, as amended (42 U.S.C. 1857f–6(a) and 1857g(a)).

SOURCE: 42 FR 28128, June 2, 1977, unless otherwise noted.

§ 85.1901 Applicability.

(a) The requirements of this subpart shall be applicable to all 1972 and later model year motor vehicles and motor vehicle engines, except that the provisions of 40 CFR 1068.501 apply instead for heavy-duty motor vehicle engines certified under 40 CFR part 86, subpart A, and for heavy-duty motor vehicles certified under 40 CFR part 1037 starting January 1, 2018.

(b) The requirement to report emission-related defects affecting a given class or category of vehicles or engines shall remain applicable for five years from the end of the model year in which such vehicles or engines were manufactured.

[81 FR 73972, Oct. 25, 2016]

§ 85.1902 Definitions.

For the purposes of this subpart and unless otherwise noted:

(a) *Act* means the Clean Air Act, 42 U.S.C. 7401–7671q, as amended.

(b) *Emission-related defect* means:

(1) A defect in design, materials, or workmanship in a device, system, or assembly described in the approved Application for Certification that affects any parameter or specification enumerated in appendix VIII of this part; or

(2) A defect in the design, materials, or workmanship in one or more emission-related parts, components, systems, software or elements of design which must function properly to ensure continued compliance with emission standards.

(c) *Useful life* has the meaning given in section 202(d) of the Act (42 U.S.C.7521(d)) and regulations promulgated thereunder.

(d) *Voluntary emissions recall* means a repair, adjustment, or modification program voluntarily initiated and conducted by a manufacturer to remedy any emission-related defect for which

direct notification of vehicle or engine owners has been provided, including programs to remedy defects related to emissions standards for CO_2, CH_4, N_2O, and/or carbon-related exhaust emissions.

(e) *Ultimate purchaser* has the meaning given in section 216 of the Act (42 U.S.C.7550).

(f) *Manufacturer* has the meaning given in section 216 of the Act (42 U.S.C.7550).

[81 FR 73973, Oct. 25, 2016]

§ 85.1903 Emissions defect information report.

(a) A manufacturer shall file a defect information report whenever, on the basis of data obtained subsequent to the effective date of these regulations:

(1) The manufacturer determines in accordance with procedures established by the manufacturer to identify safety related defects (pursuant to 15 U.S.C. 1381 *et seq.*, as amended) that a specific emission-related defect exists; and

(2) That the specific emission-related defect exists in twenty-five or more vehicles or engines of the same model year.

No report shall be filed under this paragraph for any emission-related defect corrected prior to the sale of the affected vehicles or engines to an ultimate purchaser.

(b) Defect information reports required under paragraph (a) of this section shall be submitted not more than 15 working days after an emission-related defect is found to affect twenty-five vehicles or engines of the same model year. Items of information required by paragraph (c) of this section that are either not available within that period or are significantly revised shall be submitted as they become available.

(c) Except as provided in paragraph (b) of this section, each defect report shall contain the following information in substantially the format outlined below:

(1) The manufacturer's corporate name.

(2) A description of the defect.

(3) A description of each class or category of vehicles or engines potentially affected by the defect including make, model, model year, and such other information as may be required to identify the vehicles or engines affected.

(4) For each class or category of vehicle or engine described in response to paragraph (c)(3) of this section, the following shall also be provided:

(i) The number of vehicles or engines known or estimated to have the defect and an explanation of the means by which this number was determined.

(ii) The address of the plant(s) at which the potentially defective vehicles or engines were produced.

(5) An evaluation of the emissions impact of the defect and a description of any driveability problems which a defective vehicle might exhibit.

(6) Available emissions data which relate to the defect.

(7) An indication of any anticipated manufacturer follow-up.

§ 85.1904 Voluntary emissions recall report; quarterly reports.

(a) When any manufacturer initiates a voluntary emissions recall campaign involving twenty-five or more vehicles or engines, the manufacturer shall submit a report describing the manufacturer's voluntary emissions recall plan as prescribed by this section within 15 working days of the date owner notification was begun. The report shall contain the following:

(1) A description of each class or category of vehicle or engine recalled including the number of vehicles to be recalled, the model year, the make, the model, and such other information as may be required to identify the vehicles or engines recalled.

(2) A description of the specific modifications, alterations, repairs, corrections, adjustments, or other changes to be made to correct the vehicles or engines affected by the emission-related defect.

(3) A description of the method by which the manufacturer will determine the names and addresses of vehicle or engine owners and the method by which they will be notified.

(4) A description of the proper maintenance or use, if any, upon which the manufacturer conditions eligibility for repair under the remedial plan, an explanation of the manufacturer's reasons for imposing any such condition,

and a description of the proof to be required of a vehicle or engine owner to demonstrate compliance with any such condition.

(5) A description of the procedure to be followed by vehicle or engine owners to obtain correction of the nonconformity. This shall include designation of the date on or after which the owner can have the nonconformity remedied, the time reasonably necessary to perform the labor to remedy the defect, and the designation of facilities at which the defect can be remedied.

(6) If some or all of the nonconforming vehicles or engines are to be remedied by persons other than dealers or authorized warranty agents of the manufacturer, a description of the class of persons other than dealers and authorized warranty agents of the manufacturer who will remedy the defect.

(7) Three copies of the letters of notification to be sent to vehicle or engine owners.

(8) A description of the system by which the manufacturer will assure that an adequate supply of parts will be available to perform the repair under the remedial plan including the date by which an adequate supply of parts will be available to initiate the repair campaign, the percentage of the total parts requirement of each person who is to perform the repair under the remedial plan to be shipped to initiate the campaign, and the method to be used to assure the supply remains both adequate and responsive to owner demand.

(9) Three copies of all necessary instructions to be sent to those persons who are to perform the repair under the remedial plan.

(10) A description of the impact of the proposed changes on fuel consumption, driveability, and safety of each class or category of vehicles or engines to be recalled.

(11) A sample of any label to be applied to vehicles or engines which participate in the voluntary recall campaign.

(b) Unless otherwise specified by the Administrator, the manufacturer shall report on the progress of the recall campaign by submitting subsequent reports for six consecutive quarters commencing with the quarter after the voluntary emissions recall campaign actually begins. Such reports shall be submitted no later than 25 working days after the close of each calendar quarter. For each class or category of vehicle or engine subject to the voluntary emissions recall campaign, the quarterly report shall contain the:

(1) Emission recall campaign number, if any, designated by the manufacturer.

(2) Date owner notification was begun, and date completed.

(3) Number of vehicles or engines involved in the voluntary emissions recall campaign.

(4) Number of vehicles or engines known or estimated to be affected by the emission-related defect and an explanation of the means by which this number was determined.

(5) Number of vehicles or engines inspected pursuant to the voluntary emissions recall plan.

(6) Number of inspected vehicles found to be affected by the emission-related defect.

(7) Number of vehicles actually receiving repair under the remedial plan.

(8) Number of vehicles determined to be unavailable for inspection or repair under the remedial plan due to exportation, theft, scrapping, or for other reasons (specify).

(9) Number of vehicles or engines determined to be ineligible for remedial action due to a failure to properly maintain or use such vehicles or engines.

(10) Three copies of any service bulletins transmitted to dealers which relate to the defect to be corrected and which have not previously been reported.

(11) Three copies of all communications transmitted to vehicle or engine owners which relate to the defect to be corrected and which have not previously been submitted.

(c) If the manufacturer determines that any of the information requested in paragraph (b) of this section has changed or was incorrect, revised information and an explanatory note shall be submitted. Answers to paragraphs (b)(5), (6), (7), (8), and (9) of this section shall be cumulative totals.

(d) The manufacturer shall maintain in a form suitable for inspection, such

as computer information storage devices or card files, the names and addresses of vehicles or engine owners:

(1) To whom notification was given;

(2) Who received remedial repair or inspection under the remedial plan; and

(3) Who were determined not to qualify for such remedial action when eligibility is conditioned on proper maintenance or use.

(e) The records described in paragraph (d) of this section shall be made available to the Administrator upon request.

§ 85.1905 Alternative report formats.

(a) Any manufacturer may submit a plan for making either of the reports required by §§ 85.1903 and 85.1904 on computer cards, magnetic tape or other machine readable format. The proposed plan shall be accompanied by sufficient technical detail to allow a determination that data requirements of these sections will be met and that the data in such format will be usable by EPA.

(b) Upon approval by the Administrator of the proposed reporting system, the manufacturer may utilize such system until otherwise notified by the Administrator.

§ 85.1906 Report filing: Record retention.

(a) The reports required by §§ 85.1903 and 85.1904 shall be sent to the Designated Compliance Officer as specified at 40 CFR 1068.30.

(b) The information gathered by the manufacturer to compile the reports required by §§ 85.1903 and 85.1904 shall be retained for not less than five years from the date of the manufacture of the vehicles or engines and shall be made available to duly authorized officials of the EPA upon request.

[42 FR 28128, June 2, 1977, as amended at 44 FR 61962, Oct. 29, 1979; 81 FR 73973, Oct. 25, 2016]

§ 85.1907 Responsibility under other legal provisions preserved.

The filing of any report under the provisions of this subpart shall not affect a manufacturer's responsibility to file reports or applications, obtain approval, or give notice under any provision of law.

§ 85.1908 Disclaimer of production warranty applicability.

(a) The act of filing an Emission Defect Information Report pursuant to § 85.1903 is inconclusive as to the existence of a defect subject to the Production Warranty provided by section 207 (a) of the Act.

(b) A manufacturer may include on each page of its Emission Defect Information Report a disclaimer stating that the filing of a Defect Information Report pursuant to these regulations is not conclusive as to the applicability of the Production Warranty provided by section 207(a) of the Act.

§ 85.1909 Treatment of confidential information.

(a) Any manufacturer may assert that some or all of the information submitted pursuant to this subpart is entitled to confidential treatment as provided by 40 CFR part 2, subpart B.

(b) Any claim of confidentiality must accompany the information at the time it is submitted to EPA.

(c) To assert that information submitted pursuant to this subpart is confidential, a manufacturer must indicate clearly the items of information claimed confidential by marking, circling, bracketing, stamping, or otherwise specifying the confidential information. Furthermore, EPA requests, but does not require, that the submitter also provide a second copy of its submittal from which all confidential information has been deleted. If a need arises to publicly release nonconfidential information, EPA will assume that the submitter has accurately deleted all confidential information from this second copy.

(d) If a claim is made that some or all of the information submitted pursuant to this subpart is entitled to confidential treatment, the information covered by that confidentiality claim will be disclosed by the Administrator only to the extent and by means of the procedures set forth in part 2, subpart B, of this chapter.

(e) Information provided without a claim of confidentiality at the time of submission may be made available to

the public by EPA without further notice to the submitter, in accordance with 40 CFR 2.204(c)(2)(i)(A).

[50 FR 34798, Aug. 27, 1985]

Subpart U [Reserved]

Subpart V—Emissions Control System Performance Warranty Regulations and Voluntary Aftermarket Part Certification Program

AUTHORITY: Secs. 203, 207, 208, and 301(a), Clean Air Act, as amended (42 U.S.C. 7522, 7541, 7542, and 7601(a)).

SOURCE: 45 FR 34839, May 22, 1980, unless otherwise noted.

§ 85.2101 General applicability.

(a) Sections 85.2101 through 85.2111 are applicable to all 1981 and later model year light-duty vehicles and light-duty trucks.

(b) References in this subpart to engine families and emission control systems shall be deemed to apply to durability groups and test groups as applicable for manufacturers certifying new light-duty vehicles and light-duty trucks under the provisions of 40 CFR part 86, subpart S.

[64 FR 23919, May 4, 1999]

§ 85.2102 Definitions.

(a) As used in §§ 85.2101 through 85.2111 all terms not defined herein shall have the meaning given them in the Act:

(1) *Act* means Part A of Title II of the Clean Air Act, 42 U.S.C. 7421 *et seq.* (formerly 42 U.S.C. 1857 *et seq.*), as amended.

(2) *Office Director* means the Director for the Office of Mobile Sources—Office of Air and Radiation of the Environmental Protection Agency or other authorized representative of the Office Director.

(3) *Certified part* means a part certified in accordance with the aftermarket part certification regulations contained in this subpart.

(4) *Emission performance warranty* means that warranty given pursuant to this subpart and section 207(b) of the Act.

(5) *Office Director-approved emission test* or *Emission Short Test* means any test prescribed under 40 CFR 85.2201 *et seq.*, and meeting all of the requirements thereunder.

(6) *Model year* means the manufacturer's annual production period (as determined by the Office Director) which includes January 1 of such calendar year; however, if the manufacturer has no annual production period, the term ''model year'' shall mean the calendar year.

(7) *Original equipment part* means a part present in or on a vehicle at the time the vehicle is sold to the ultimate purchaser, except for components installed by a dealer which are not manufactured by the vehicle manufacturer or are not installed at the direction of the vehicle manufacturer.

(8) *Owner* means the original purchaser or any subsequent purchaser of a vehicle.

(9) *Owner's manual* means the instruction booklet normally provided to the purchaser of a vehicle.

(10) *Useful life* means that period established pursuant to section 202(d) of the Act and regulations promulgated thereunder.

(11) *Vehicle* means a light duty vehicle or a light duty truck.

(12) *Warranty booklet* means a booklet, separate from the owner's manual, containing all warranties provided with the vehicle.

(13) *Written instructions for proper maintenance and use* means those maintenance and operation instructions specified in the owner's manual as being necessary to assure compliance of a vehicle with applicable emission standards for the useful life of the vehicle that are:

(i) In accordance with the instructions specified for performance on the manufacturer's prototype vehicle used in certification (including those specified for vehicles used under special circumstances), and

(ii) In compliance with the requirements of 40 CFR 86.094–38 or 86.1808–01 (as appropriate for the applicable model year vehicle/engine classification); and

(iii) In compliance with any other regulations promulgated by the Office

Director governing maintenance and use instructions.

(14) *Emission related parts* means those parts installed for the specific purpose of controlling emissions or those components, systems, or elements of design which must function properly to assure continued vehicle emission compliance.

(15) *Objective evidence* of an emission related repair means all diagnostic information and data, the actual parts replaced during repair, and any other information directly used to support a warranty claim, or to support denial of such a claim.

(16) *Valid emission performance warranty claim* means a claim in which there is no evidence that the vehicle had not been properly maintained and operated in accordance with manufacturer instructions, the vehicle failed to conform to applicable emission standards as measured by an Office Director-approved type of emission warranty test during its useful life and the owner is subject to sanction as a result of the test failure.

(17) *Reasonable expense* means any expense incurred due to repair of a warranty failure caused by a non-original equipment certified part, including, but not limited to, all charges in any expense categories that would be considered payable by the involved vehicle manufacturer to its authorized dealer under a similar warranty situation where an original equipment part was the cause of the failure. Included in ''reasonable expense'' are any additional costs incurred specifically due to the processing of a claim involving a certified aftermarket part or parts as covered in these regulations. The direct parts and labor expenses of carrying out repairs is immediately chargeable to the part manufacturer. All charges beyond the actual parts and labor repair expenses must be amortized over the number of claims and/or over a number of years in a manner that would be considered consistent with generally accepted accounting principles. These expense categories shall include but are not limited to the cost of labor, materials, record keeping, special handling, and billing as a result of replacement of a certified aftermarket part.

(18) *MOD Director* means Director of Manufacturers Operations Division, Office of Mobile Sources—Office of Air and Radiation of the Environmental Protection Agency.

[45 FR 34839, May 22, 1980, as amended at 54 FR 32587, Aug. 8, 1989; 64 FR 23919, May 4, 1999]

§ 85.2103 Emission performance warranty.

(a) The manufacturer of each vehicle to which this subpart applies shall warrant in writing that if:

(1) The vehicle is maintained and operated in accordance with the written instructions for proper maintenance and use and

(2) The vehicle fails to conform at any time during its useful life to the applicable emission standards or family emission limits as determined by an EPA-approved emission test, and

(3) Such nonconformity results or will result in the vehicle owner having to bear any penalty or other sanction (including the denial of the right to use the vehicle) under local, State or Federal law, then the manufacturer shall remedy the nonconformity at no cost to the owner; *except that*, if the vehicle has been in operation for more than 24 months or 24,000 miles, the manufacturer shall be required to remedy only those nonconformities resulting from the failure of components which have been installed in or on the vehicle for the sole or primary purpose of reducing vehicle emissions and that were not in general use prior to model year 1968.

(b) The warranty period shall begin on the date the vehicle is delivered to its ultimate purchaser, or if the vehicle is first placed in service as a ''demonstrator'' or ''company'' car prior to delivery, on the date it is first placed in service.

[45 FR 34839, May 22, 1980, as amended at 54 FR 32587, Aug. 8, 1989]

§ 85.2104 Owners' compliance with instructions for proper maintenance and use.

(a) An emission performance warranty claim may be denied on the basis of noncompliance by a vehicle owner with the written instructions for proper maintenance and use.

(b) When determining whether an owner has complied with the written instructions for proper maintenance and use, a vehicle manufacturer may require an owner to submit evidence of compliance only with those written maintenance instructions for which the manufacturer has an objective reason for believing:

(1) Were not performed; and

(2) If not performed could be the cause of the particular vehicle's exceeding applicable emission standards.

(c) Evidence of compliance with a maintenance instruction may consist of:

(1) A maintenance log book which has been validated at the approximate time or mileage intervals specified for service by someone who regularly engages in the business of servicing automobiles for the relevant maintenance instruction(s); or

(2) A showing that the vehicle has been submitted for scheduled maintenance servicing at the approximate time or mileage intervals specified for service to someone who regularly engages in the business of servicing automobiles for the purpose of performing the relevant maintenance; or

(3) A statement by the vehicle owner that he or she performed the maintenance at the approximate time or mileage interval specified including a showing,

(i) That the owner purchased and used proper parts, and

(ii) Upon request by the vehicle manufacturer, that the owner is able to perform the maintenance properly.

(d) Except as provided in paragraph (e) of this section, the time/mileage interval for scheduled maintenance services shall be the service interval specified for the part in the written instructions for proper maintenance and use.

(e) For certified parts having a maintenance or replacement interval different from that specified in the written instructions for proper maintenance and use, the time/mileage interval shall be the service interval for which the part was certified.

(f) The owner may perform maintenance or have maintenance performed more frequently then required in the maintenance instructions.

(g) Except as provided in paragraph (h) of this section, a manufacturer may deny an emission performance warranty claim on the basis of noncompliance with the written instructions for proper maintenance and use only if:

(1) An owner is not able to comply with a request by a manufacturer for evidence pursuant to paragraph (c) of this section; or

(2) Notwithstanding the evidence presented pursuant to paragraph (c) of this section, the manufacturer is able to prove that the vehicle failed an emission short test because:

(i) The vehicle was abused, or

(ii) An instruction for the proper maintenance and use was performed in a manner resulting in a component's being improperly installed or a component or related parameter's being adjusted substantially outside of the manufacturer's specifications, or

(iii) Unscheduled maintenance was performed on a vehicle which resulted in the removing or rendering inoperative of any component affecting the vehicle's emissions.

(h) In no case may a manufacturer deny an emission performance warranty claim on the basis of:

(1) Warranty work or predelivery service performed by any facility authorized by the vehicle manufacturer to perform such work or service; or

(2) Work performed in an emergency situation to rectify an unsafe condition, including an unsafe driveability condition, attributable to the manufacturer, provided the vehicle owner has taken steps to put the vehicle back in a conforming condition in a timely manner; or

(3) The use of any uncertified part or non-compliance with any written instruction for proper maintenance and use which is not relevant to the reason that the vehicle failed to comply with applicable emission standards; or

(4) Any cause attributable to the vehicle manufacturer; or

(5) The use of any fuel which is commonly available in the geographical area in which the vehicle or engine is located, unless the written instructions for proper maintenance and use specify that the use of that fuel would adversely affect the emission control devices and systems of the vehicle, and

there is commonly available information for the owner to identify the proper fuel to be used.

[45 FR 34839, May 22, 1980, as amended at 54 FR 32587, Aug. 8, 1989]

§ 85.2105 Aftermarket parts.

(a) No valid emission performance warranty claim shall be denied on the basis of the use of a properly installed certified aftermarket part in the maintenance or repair of a vehicle. A vehicle manufacturer that honors a valid emission performance warranty claim involving a certified aftermarket part may seek reimbursement for reasonable expenses incurred in honoring the claim by following the warranty claim procedures listed in § 85.2107(c).

(b) Except as provided in § 85.2104(h), a vehicle manufacturer may deny an emission performance warranty claim on the basis of an uncertified aftermarket part used in the maintenance or repair of a vehicle if the vehicle manufacturer can demonstrate that the vehicle's failure to meet emission standards was caused by use of the uncertified part. A warranty claim may be denied if the vehicle manufacturer submits a written document to the vehicle owner that the vehicle owner is unable or unwilling to refute. The document must:

(1) Establish a causal connection between the emissions short test failure and use of the uncertified part, and,

(2) Assert that:

(i) Removal of the uncertified part and installation of any comparable certified or original equipment part previously removed or replaced during installation of the uncertified part will resolve the observed emissions failure in the vehicle, and/or

(ii) Use of the uncertified part has caused subsequent damage to other specified certified components such that replacement of these components would also be necessary to resolve the observed vehicle emissions failure, and,

(3) List all objective evidence as defined in § 85.2102 that was used in the determination to deny warranty. This evidence must be made available to the vehicle owner or EPA upon request, and

(c) A part not required to be replaced at a definite interval in accordance with the written instructions for maintenance and use shall be warranted for the full term of any warranty mandated by the Act. Instructions to replace a component only if checked and found to be operating below specification shall have no bearing on warranty coverage, unless an owner did not follow such an instruction prior to the short test failure and noncompliance with that instruction caused the failure of another vehicle component relevant to the nonconformity.

[45 FR 34839, May 22, 1980, as amended at 54 FR 32587, Aug. 8, 1989]

§ 85.2106 Warranty claim procedures.

(a) A claim under the emission performance warranty may be raised immediately upon the failure of an EPA-approved emission test if, as a result of that failure, an owner is required to take action of any kind in order to avoid imposition of a penalty or sanction. An owner need not suffer the loss of the right to use a vehicle, be fined, incur repair expenses, or actually bear any penalty or sanction to satisfy the requirement of § 85.2103(a)(3). That requirement shall be met if a test failure sets a procedure in motion under which the owner will bear a penalty or sanction if a vehicle is not brought into conformity or repaired to some specified extent within some specified period of time.

(b) A warranty claim may be submitted by bringing a vehicle to:

(1) Any repair facility authorized by the vehicle manufacturer to service that model vehicle, or

(2) Any repair facility authorized by the vehicle manufacturer to perform emission performance warranty repairs for that model vehicle.

(c) To the extent required by any Federal or State law, whether statutory or common law, a vehicle manufacturer shall be required to provide a means for non-franchised repair facilities to perform emission performance warranty repairs.

(d) The manufacturer of each vehicle to which the warranty is applicable shall establish procedures as to the manner in which a claim under the emission performance warranty is to be processed. The procedures shall:

(1) Provide for a final decision by the vehicle manufacturer within a reasonable time, not to exceed 30 days from the time at which the vehicle is initially presented for repair or within the time period during which an owner is required by local, State or federal law to have the vehicle repaired without incurring further penalties or sanctions (whichever is shorter), unless a delay

(i) Is requested by the vehicle owner, or

(ii) Is caused by an event not attributable to the vehicle manufacturer or the warranty repair facility; and

(2) Require that if the facility at which the vehicle is initially presented for repair is unable for any reason to honor the particular claim, then, unless this requirement is waived in writing by the vehicle owner, the repair facility shall forward the claim to an individual or office authorized to make emission performance warranty determinations for the manufacturer.

(e) Within the time period specified in paragraph (d) of this section the manufacturer shall:

(1) Notify the owner that it will honor the claim; or

(2) Provide the owner, in writing, with an explanation of the basis upon which the claim is being denied; or

(3) If the basis of the claim denial involves use of an uncertified part, provide the owner in writing with an explanation of the basis upon which the claim is being denied according to all criteria specified in § 85.2105(b).

(f) Failure to notify an owner within the required time period (as determined under paragraph (d) of this section) for reasons that are not attributable to the vehicle owner or events which are not beyond the control of the vehicle manufacturer or the repair facility, shall result in the vehicle manufacturer being responsible for repairing the warranted items free of charge to the vehicle owner.

(g) The vehicle manufacturer shall incur all costs associated with a determination that an emission performance warranty claim is valid.

[45 FR 34839, May 22, 1980, as amended at 54 FR 32588, Aug. 8, 1989]

§ 85.2107 Warranty remedy.

(a) The manufacturer's obligation under the emission performance warranty shall be to make all adjustments, repairs or replacements necessary to assure that the vehicle complies with applicable emission standards of the U.S. Environmental Protection Agency, that it will continue to comply for the remainder of its useful life (if proper maintenance and operation are continued), and that it will operate in a safe manner. The manufacturer shall bear all costs incurred as a result of the above obligation, *except that* after the first 24 months or 24,000 miles (whichever first occurs) the manufacturer shall be responsible only for:

(1) The adjustment, repair or replacement of those components which have been installed in or on a vehicle for the sole or primary purpose of reducing vehicle emissions, and which were not in general use prior to model year 1968; and

(2) All other components which must be adjusted, repaired or replaced to enable a component repaired or replaced under paragraph (a)(1) of this section to perform properly.

(b) Under the Emissions Performance Warranty, the manufacturer shall be liable for the total cost of the remedy for any vehicle validly presented for repair to any authorized service facility authorized by the vehicle manufacturer. State or local limitations as to the extent of the penalty or sanction imposed upon an owner of a failed vehicle shall have no bearing on this liability.

(c) The remedy provided under paragraph (a) of this section shall include the repair or replacement of certified parts as required in § 85.2105(a). To seek reimbursement from the involved certified aftermarket part manufacturer for reasonable expenses incurred due to the certified aftermarket parts determined to be the cause of a performance warranty failure, the vehicle manufacturer must:

(1) Retain all parts replaced during the performance warranty repair, and

(2) Follow the procedures laid out in § 85.2117.

(d) If a manufacturer is unable (for reasons not attributable to the vehicle owner or events beyond the control of

the vehicle manufacturer or an authorized repair facility) to repair a vehicle within the time period specified under § 85.2106(d) after the initial presentation of the vehicle to an authorized repair facility, then the owner shall be entitled to have the warranty remedy performed, at the expense of the manufacturer, by any repair facility of the owner's choosing.

(e) The vehicle manufacturer may deny warranty for a failure caused by an uncertified part in accordance with the criteria in § 85.2105.

[45 FR 34839, May 22, 1980, as amended at 54 FR 32588, Aug. 8, 1989]

§ 85.2109 Inclusion of warranty provisions in owners' manuals and warranty booklets.

(a) A manufacturer shall furnish with each new motor vehicle, a full explanation of the Emission Performance Warranty, including at a minimum the following information:

(1) A basic statement of the coverage of the emissions performance warranty as set out in § 85.2103. This shall be separated from any other warranty given by the manufacturer and shall be prefaced by the title ''Emissions Performance Warranty'' set in bold face type; and

(2) A list of all items which are covered by the emission performance warranty for the full useful life of the vehicle. This list shall contain all components which have been installed in or on a vehicle solely or primarily for the purpose of reducing vehicle emissions, except those components which were in general use prior to model year 1968. All items listed pursuant to this subsection shall be described in the same manner as they are likely to be described on a service facility work receipt for that vehicle; and

(3) A list or a reference to the location of the instructions for proper maintenance and use, together with the time and/or mileage interval at which such instructions are to be performed; and

(4) An explanation of the effect that the use of certified parts will have on the emission performance warranty. This explanation shall comport with the provisions of § 85.2105 (b) and (c), including a statement in boldface type that maintenance, replacement, or repair of the emission control devices and systems may be performed by any automotive repair establishment or individual using any certified part; and

(5) Complete instructions as to when and how an owner may bring a claim under the emissions performance warranty, as governed by §§ 85.2104 and 85.2106. These instructions shall include:

(i) An explanation of the point in time at which a claim may be raised; and

(ii) Complete procedures as to the manner in which a claim may be raised; and

(iii) The provisions for manufacturer liability contained in § 85.2106(f) if the manufacturer fails to respond within the time period set in accordance with § 85.2106(d);

(6) An explanation that an owner may obtain further information concerning the emission performance warranty or that an owner may report violations of the terms of the Emission Performance Warranty by contacting the Designated Compliance Officer as specified at 40 CFR 1068.30 (Attention: Warranty Claim).

(b) The warranty information shall be provided in the same document as other warranties provided with the vehicle.

(c) If a separate warranty booklet is provided with the vehicle, the owner's manual shall contain, at a minimum, the following information:

(1) A general list of all warranties covering the vehicle; and

(2) A statement that detailed warranty information can be found in the warranty booklet.

(d) If a separate warranty booklet is not provided with the vehicle, the information specified in paragraph (a) of this section shall be contained in the owner's manual.

[45 FR 34839, May 22, 1980, as amended at 58 FR 65554, Dec. 15, 1993; 81 FR 73973, Oct. 25, 2016]

§ 85.2110 Submission of owners' manuals and warranty statements to EPA.

(a) The manufacturer of each vehicle to which this subpart applies shall submit a copy to EPA of both the owner's

manual and warranty booklet (if applicable) for each model vehicle, *except that*, if the same warranty information is to be provided for more than one model vehicle, the manufacturer may submit copies for a single model vehicle with a statement that such copies are complete and accurate representation of the warranty information provided with all other specified models.

(1) The owner's manuals and warranty booklets should be received by EPA 60 days prior to the introduction of the vehicle for sale.

(2) If the manuals and warranty booklets are not in their final printed format 60 days prior to the introduction of the vehicle for sale, a manufacturer may submit the most recent draft at that time, provided that final versions are submitted within 15 days of the final printing.

(b) All materials described in paragraph (a) of this section shall be sent to the Designated Compliance Officer as specified at 40 CFR 1068.30 (Attention: Warranty Booklet).

[45 FR 34839, May 22, 1980, as amended at 58 FR 65554, Dec. 15, 1993; 81 FR 73973, Oct. 25, 2016]

§ 85.2111 Warranty enforcement.

The following acts are prohibited and may subject a manufacturer to up to a $32,500 civil penalty for each offense, except as noted in paragraph (d) of this section:

(a) Selling or leasing a light duty vehicle without providing in writing the warranty information required by § 85.2109;

(b) Failing or refusing to comply with the terms and conditions of the Emission Performance Warranty with respect to any vehicle to which this subpart applies. Acts constituting such a failure or refusal shall include, but are not limited to, the following,

(1) Failure to honor a valid warranty claim,

(2) Performance of a warranty repair in a manner which cannot reasonably be expected to allow the vehicle to meet applicable emission standards for the remainder of its useful life,

(3) Failure of a manufacturer to reimburse a dealer or other designated agent for performance of a vehicle repair made pursuant to this subpart, and

(4) Failure of a manufacturer to supply a part necessary to perform a warranty repair within the time limit specified under § 85.2106(d), unless such failure is for a reason not attributable to the vehicle manufacturer or the warranty repair facility;

(c) To provide directly or indirectly in any communication to the ultimate purchaser or any subsequent purchaser that the emission performance warranty coverage is conditioned upon the use of any name brand part, component, or system or upon service (other than a component or service provided without charge under the terms of the purchase agreement), unless the communication is made pursuant to a written waiver by the Office Director.

(d) The maximum penalty value listed in this section is shown for calendar year 2004. Maximum penalty limits for later years may be adjusted based on the Consumer Price Index. The specific regulatory provisions for changing the maximum penalties, published in 40 CFR part 19, reference the applicable U.S. Code citation on which the prohibited action is based.

[45 FR 34839, May 22, 1980, as amended at 58 FR 65554, Dec. 15, 1993; 70 FR 40432, July 13, 2005]

§ 85.2112 Applicability.

The provisions of §§ 85.2112 through 85.2122 apply to emission related automotive aftermarket parts which are to be installed in or on 1968 and later model year light-duty vehicles and light-duty trucks.

[54 FR 32588, Aug. 8, 1989]

§ 85.2113 Definitions.

As used in this subpart, all terms not defined shall have the meaning given them in the Act:

(a) *Act* means Part A of Title II of the Clean Air Act, 42 U.S.C. 7421 *et seq.* (formerly 42 U.S.C. 1857 *et seq.*) as amended.

(b) *Aftermarket part* means any part offered for sale for installation in or on a motor vehicle after such vehicle has left the vehicle manufacturer's production line.

(c) *Aftermarket part manufacturer* means:

(1) A manufacturer of an aftermarket part or,

(2) A party that markets aftermarket parts under its own brand name, or,

(3) A rebuilder of original equipment or aftermarket parts, or

(4) A party that licenses others to sell its parts.

(d) *Agency* means the Environmental Protection Agency.

(e) *Certified aftermarket part* means any aftermarket part which has been certified pursuant to this subpart.

(f) *Emission warranty* means those warranties given by vehicle manufacturers pursuant to section 207 of the Act.

(g) *Emission-critical parameters* means those critical parameters and tolerances which, if equivalent from one part to another, will not cause the vehicle to exceed applicable emission standards with such parts installed.

(h) *Engine family* means the basic classification unit of a vehicle's product line for a single model year used for the purpose of emission-data vehicle or engine selection and as determined in accordance with 40 CFR 86.078–24.

(i) *Vehicle or engine configuration* means the specific subclassification unit of an engine family or certified part application group as determined by engine displacement, fuel system, engine code, transmission and inertia weight class, as applicable.

(j) *Certification vehicle emission margin* for a certified engine family means the difference between the EPA emission standards and the average FTP emission test results of that engine family's emission-data vehicles at the projected applicable useful life mileage point (i.e., useful life mileage for light-duty vehicles is 50,000 miles and for light-duty trucks is 120,000 miles for 1985 and later model years or 50,000 miles for 1984 and earlier model years).

(k) *Applications* means all vehicle or engine configurations for which one part is being certified as set forth in the aftermarket part manufacturer's notification of intent to certify pursuant to § 85.2115(a)(1).

[45 FR 78458, Nov. 25, 1980, as amended at 54 FR 32588, Aug. 8, 1989]

§ 85.2114 Basis of certification.

(a) *Prior to certifying*, the aftermarket part manufacturer must determine:

(1) Whether the part to be certified is an emission related part as defined in § 85.2102. The MOD Director shall deny certification to any parts which he or she determines is not an emission related part.

(2) The vehicle or engine configurations for which this part is being certified. These are the vehicle and engine designs for which the aftermarket part manufacturer intends to sell the certified aftermarket part.

(3) Whether the part qualifies under one of the part categories, listed in § 85.2122 of this subpart that are eligible to certify using emission critical parameters and, if so, whether the manufacturer elects to demonstrate certification using emission critical parameters. An aftermarket part may be certified under this category only if the part's emission-critical parameters, as set forth in § 85.2122, are equivalent to those of the original equipment or previously certified part it is to replace. Compliance with the emission-critical parameters discussed in paragraph (b) of this section may be demonstrated by compliance with the relevant test procedures and criteria specified in appendix I to this subpart. The requirements of this paragraph apply to all on-road vehicles and engines. Alternatively, the manufacturer may elect to demonstrate certification compliance according to the emission test procedures described in paragraph (c) of this section.

(b) *For parts eligible to certify using emission-critical parameters, certification compliance can be demonstrated as follows.* (1) The durability procedure contained in appendix I to this subpart can be used. As an alternative, the aftermarket part manufacturer may use a different durability procedure if it can demonstrate to the MOD Director that the alternative procedure results in an improved technical evaluation of the part's influence on vehicle or engine emissions for its useful life mileage interval, or results in a significant cost savings to the aftermarket part manufacturer with no loss in technical validity compared to the recommended durability procedure. The

aftermarket part manufacturer shall receive the written approval from the MOD Director prior to implementation of the alternative procedures.

(2) Compliance with certification requirements is based on conformance with all emission-critical parameters in § 85.2122. This shall be accomplished by performing such procedures, tests, or analyses described in appendix I, or other procedures subject to the MOD Director's approval, necessary to ascertain with a high degree of certainty the emission-critical parameter specifications and tolerances for the aftermarket part and the original equipment or previously certified part for which an equivalent aftermarket certified part is to be used.

(i) If information is available in appendix I of this subpart to identify the applicable emission-critical parameters, the aftermarket part certifier must use such information.

(ii) If sampling and analysis of original equipment or previously certified parts is relied upon, the aftermarket part certifier must use sound statistical sampling techniques to ascertain the mean and range of the applicable emission parameters.

(iii) If an aftermarket part replaces more than one part on the same application, it may be certified only if the aftermarket part meets the applicable emission-critical parameters of § 85.2122 for each part or parts which the aftermarket part is to replace. If an aftermarket part is to replace more than one part or an entire system, compliance must be demonstrated for all emission-critical parameters involved, except those which relate solely to the interface between the parts being replaced by the aftermarket part.

(c) *For parts certifying on the basis of emission test results, durability demonstration testing shall be conducted as follows.* (1) Prior to certification emission testing, the actual aftermarket part used for certification testing must meet the durability demonstration requirements of this paragraph for at least the part's useful life mileage interval.

(i) If an original equipment part has no scheduled replacement interval, then the useful life mileage interval of the aftermarket part of that type or which replaces the function of that part may be certified with a service interval less than the useful life of the motor vehicle or motor vehicle engine, or

(ii) If any provision of 40 CFR part 86 establishes a minimum replacement or service interval for an original equipment part during vehicle or engine certification, then the useful life mileage interval of the aftermarket part of that type or which replaces the function of that part is said minimum interval.

(2) The part manufacturer must decide whether it can demonstrate to the MOD Director that, during normal vehicle operation, the candidate part will not accelerate deterioration of any original equipment emission related parts. This demonstration must be based on technical rationale that shows that the candidate part has no significant physical or operational effect on any original emission components or system which would be different than that experienced by the vehicle operating with all original equipment emission system parts. The part's effect on each major emission system must be addressed separately in the demonstration.

(i) If the aftermarket part to be certified accelerates deterioration of any existing emission related parts then certification shall be carried out as specified under the paragraph (c)(3) of this section for parts that accelerate deterioration of existing emission related parts.

(ii) If the aftermarket part manufacturer can demonstrate that the part to be certified will not accelerate deterioration of any existing emission related components, then the manufacturer can certify according to paragraph (c)(4) in this section for parts demonstrated to not accelerate deterioration of existing emission related parts.

(3) *For aftermarket parts that accelerate deterioration of existing emission related parts during normal operation.* (i) The aftermarket test part can be installed on the durability test vehicle and aged for 50,000 miles using the vehicle durability driving schedules contained in part 86, appendix IV. As an alternative, the aftermarket part manufacturer may use a different durability procedure if it can demonstrate to the MOD

Director that the alternative procedure results in an improved technical evaluation of the part's influence on vehicle or engine emissions for the part's useful life mileage interval, or results in a significant cost savings to the aftermarket part manufacturer with no loss in technical validity compared to the recommended durability schedules in part 86, appendix IV. The aftermarket part manufacturer shall receive the written approval from the MOD Director prior to implementation of the alternative procedures.

NOTE: At the time of certification emission testing, the same part and vehicle combination used for mileage accumulation shall be used for emission testing.

(ii) Where the comparable original equipment part has a recommended replacement interval of less than 50,000 miles, the test part shall be replaced no sooner than its useful life mileage interval during the required 50,000 mile durability demonstration.

NOTE: At the time of certification emission testing, one of the aftermarket parts that accumulated at least its useful life mileage during the aging process under this paragraph shall be installed on the durability test vehicle that has accumulated 50,000 miles.

(4) *For aftermarket parts demonstrated not to accelerate deterioration on existing emission related parts during normal operation,* the part manufacturer must determine whether the part will cause a noticeable change in vehicle driveability.

(i) Parts that cause no noticeable change in vehicle driveability, performance, and/or fuel economy when the part fails, the durability driving schedules contained in part 86, appendix IV can be used. As an alternative, the aftermarket part manufacturer may use a different durability procedure if it can demonstrate to the MOD Director that the alternative procedure results in an improved technical evaluation of the part's influence on vehicle or engine emissions for its useful life mileage interval, or results in a significant cost savings to the aftermarket part manufacturer with no loss in technical validity compared to the durability schedules in part 86, appendix IV. The aftermarket part manufacturer shall receive the written approval from the MOD Director prior to implementation of the alternative procedures.

(ii) Parts demonstrated to cause a noticeable change in vehicle driveability, performance, and/or fuel economy when the part fails, are exempt from aging if the part manufacturer can demonstrate to the MOD Director that the primary failure mode of the aftermarket component or system affects the driveability, performance, and/or fuel economy of the vehicle at a level readily detectable by the driver and likely to result in near term repair of failing components and correction of the emissions failure. (Use of on-board diagnostics and malfunction indicators as covered in paragraph (g) of this section is not necessarily an adequate demonstration that the certified part will be replaced. The part manufacturer must demonstrate that the diagnostic and malfunction indicator system will routinely result in repair or replacement of the part in use).

(5) *For parts which only affect evaporative emissions performance,* the aftermarket part manufacturer shall determine and demonstrate to the MOD Director the appropriate durability procedure to age its part. The demonstration shall include all documentation, analyses, and test results that support this determination, and the documentation that support the durability procedure results shall be submitted with the notification of intent to certify as per §85.2115 and is subject to MOD Director's review.

(6) *Durability demonstration vehicle selection.* The demonstration vehicle used must represent the ''worst case'' of all the configurations for which the aftermarket part is being certified. The worst case configuration shall be that configuration which will likely cause the most deterioration in the performance characteristics of the aftermarket part which influence emissions during the part's useful life mileage. The worst case configuration shall be selected from among those configurations for which the aftermarket part is to be certified. One of the following two methods shall be used to select the worst case durability demonstration vehicle(s):

(i) In the first method, the selection shall be based on a technical judgment by the aftermarket part manufacturer of the impact of the particular design, or calibration of a particular parameter or combination of parameters, and/or an analysis of appropriate data, or

(ii) In the second alternative method, the selection shall be made from among those vehicle configurations with the heaviest equivalent test weight, and within that group, the largest displacement engine.

(d) *For parts certifying on the basis of emission test results, certification compliance shall be demonstrated as follows.* (1) The emission test to be used is the Federal Test Procedure as set forth in the applicable portions of 40 CFR part 86. Certification emission testing must be carried out using representative production aftermarket parts as provided in paragraph (e) of this section. The test results must demonstrate that the proper installation of the certified aftermarket part will not cause the vehicle to fail to meet any applicable Federal emission requirements under section 202 of the Act.

(2) The following portions of the Federal Test Procedure are not required to be performed when certifying a part using emission testing:

(i) The evaporative emissions portion, if the aftermarket manufacturer has an adequate technical basis for believing that the part has no effect on the vehicle's evaporative emissions;

(ii) The exhaust emissions portion, if the part manufacturer has an adequate technical basis for believing that the part has no affect on the vehicle's exhaust emissions; and

(iii) Other portions therein which the part manufacturer believes are not relevant; *Provided, That* the part manufacturer has requested and been granted a waiver in writing by the MOD Director for excluding such portion.

(3) Exhaust Emission Testing. Certification exhaust emission testing for aftermarket parts shall be carried out in the following manner:

(i) For light duty vehicle parts that accelerate deterioration of existing emission related parts, at least one emission test is required. The test(s) shall be performed according to the Federal Test Procedure on the same test vehicle and aftermarket part combination that was previously aged as required. The results of all tests performed shall be averaged for each emission constituent. The average values shall meet all applicable Federal emission requirements under section 202 of the Act.

(A) For aftermarket parts where the comparable original equipment part has no recommended replacement interval, the same part and vehicle combination used for the durability demonstration shall be used for certification exhaust emission testing.

(B) For aftermarket parts where the comparable original equipment part has a recommended replacement interval of less than 50,000 miles, one of the aftermarket parts that accumulated at least the part's useful life mileage during the durability demonstration must be installed on the durability demonstration vehicle that has accumulated 50,000 miles for certification exhaust emission testing.

(ii) For light duty truck parts that accelerate deterioration of existing emission related parts.

(A) An emission test shall be performed on emission test vehicles at 4000 miles and at 50,000 miles, with the part installed. Exhaust emission deterioration factors for the test vehicle shall be calculated from these two test results. The aftermarket part manufacturer may elect to perform other emission tests at interim mileages. However, any interim tests must be spaced at equal mileage intervals. If more than one test is performed at any one mileage point, then all tests at this point shall be averaged prior to determining the deterioration factor. The deterioration factor shall be calculated using the least squares straight line method, in accordance with § 86.088–28(a). The deterioration factor for each emission constituent shall be used to linearly project the 50,000 mile test result out to 120,000 miles. The projected 120,000 mile test result shall meet light duty truck emission standards.

(B) As an option, the light-duty truck part manufacturer may durability age the test vehicle and aftermarket part to 120,000 miles, and

then perform one Federal Test Procedure test. The actual test results in this case must pass all Federal emission standards.

(iii) For parts demonstrated to not accelerate deterioration of existing emission related parts during normal operation:

(A) If parts cause no noticeable change in vehicle driveability, performance, and/or fuel economy when the part fails, the certification exhaust emission test vehicle need not be the same vehicle as that used for durability demonstration. Upon completion of aging, one Federal Test Procedure test shall be performed with the aged aftermarket part installed on a test vehicle that has just completed one Federal Test Procedure test in the original equipment configuration (i.e., before the aftermarket part or system is installed). If more than one test is performed either before or after the aftermarket part is installed, then an equivalent number of tests must be performed in both configurations. The results of all tests performed before the part is installed shall be averaged and the results of all tests performed after the part is installed shall be averaged for each emission constituent. The difference in Federal Test Procedure emission results between the tests with the aged aftermarket part installed and the test vehicle in the original equipment configuration shall be less than or equal to the certification vehicle emission margin of any and all of the certification test vehicles from the various configurations for which the aftermarket part is being certified.

(B) For parts demonstrated to cause a noticeable change in vehicle driveability, performance, and/or fuel economy when the part fails, no durability aging of the part is required before certification emission testing. One Federal Test Procedure test shall be performed on the test vehicle in its original equipment configuration (i.e., before the aftermarket part or system is installed) and one test with an aftermarket part representative of production (as provided in paragraph (e) of this section) installed on the test vehicle. If more than one test is performed either before or after the aftermarket part is installed, then an equivalent number of tests must be performed in both configurations. The results of all tests performed with the aftermarket part installed shall be averaged and the results of all tests performed in the original equipment configuration shall be averaged for each emission constituent. The difference in Federal Test Procedure emission results between the tests with the aftermarket part installed and the test vehicle in the original equipment configuration shall be less than or equal to the certification vehicle emission margin of any and all of the certification test vehicles from the various configurations for which the aftermarket part is being certified.

(4) Evaporative emission testing. For parts determined by the part manufacturer (with appropriate technical rationale) to affect only evaporative emissions performance, at least one evaporative emissions portion of the Federal Test Procedure test shall be performed on the vehicle in its original equipment configuration and at least one with the aftermarket part installed. Both the original equipment and aftermarket part shall be aged according to paragraph (c)(5) of this section prior to testing. If more than one test is performed either before or after the aftermarket part is installed, then an equivalent number of tests must be performed in both configurations. The emission results of all tests performed before the part is installed shall be averaged and the emission results of all tests performed after the part is installed shall be averaged. The difference in Federal Test Procedure emission results between the tests with the aged aftermarket part installed and the test vehicle in the original equipment configuration shall be less than or equal to the certification vehicle emission margin of any and all of the certification test vehicles from the various configurations for which the aftermarket part is being certified.

(5) Emission test vehicle selection: The test vehicle used must represent the ''worst case'' with respect to emissions of all those configurations for which the aftermarket part is being certified. The worst case configuration shall be that configuration which, having the aftermarket part installed, is

least likely to meet the applicable emission standards among all those configurations on which the aftermarket part is intended to be installed as a certified aftermarket part. One of the following two methods shall be used to select the worst case emission test vehicle(s):

(i) In the first method, the selection shall be based on a technical judgment by the aftermarket part manufacturer of the impact of the particular design or calibration of a particular parameter or combination of parameters and/or an analysis of appropriate data, or

(ii) In the second alternative method, two defined worst case test vehicles shall be selected from the vehicle configurations using the following criteria:

(A) The first test vehicle is that engine family for which the largest number of parts are projected to be sold. Within that family the manufacturer shall select the configurations with the heaviest equivalent test weight, and then within that group the configuration with the largest displacement engine.

(B) The second test vehicle shall be from a different vehicle manufacturer than the first test vehicle, or if the aftermarket part applies to only one vehicle manufacturer, from a different engine family. Engine families are determined by the vehicle manufacturer or when certifying under 40 CFR part 86. Within that group, the second test vehicle is selected from the vehicle configurations with the heaviest equivalent test weight, and then, within that group, the configuration with the largest displacement engine. If a part applies to only one engine family then only the vehicle specified in paragraph (d)(5)(ii)(A), of this section, is required to be tested.

(iii) The results of certification tests using the worst case vehicle selections made in this section shall only be applicable for configurations that are required to meet the same or less stringent (numerically higher) emission standards than those of the worst case configuration.

(iv) The worst case test vehicle(s) selected for certification emission testing is(are) not required to meet Federal emission standards in its original configuration. However, each test vehicle shall have representative emissions performance that is close to the standards and have no obvious emission defects. Each test vehicle shall be tuned properly and set to the vehicle manufacturer's specifications before testing is performed. Any excessively worn or malfunctioning emission related part shall be repaired prior to testing.

(e) *Test part selection.* Certification shall be based upon tests utilizing representative production aftermarket parts selected in a random manner in accordance with accepted statistical procedures.

(f) *Replacing original equipment parts.* Installation of any certified aftermarket part shall not result in the removal or rendering inoperative of any original equipment emission related part other than the part(s) being replaced. Furthermore, installation of any certified aftermarket part shall not require the readjustment of any other emission related part to other than the vehicle manufacturer specifications, cause or contribute to an unreasonable risk to the public health, welfare or safety, or result in any additional range of parameter adjustability or accessibility to adjustment than that of the vehicle manufacturer's emission related parts.

(g) *Affects on vehicle on board diagnostic system.* Installation of any certified aftermarket part shall not alter or render inoperative any feature of the on-board diagnostic system incorporated by the vehicle manufacturer. The certified part may integrate with the existing diagnostic system if it does not alter or render inoperative any features of the system. However, use of on-board diagnostics or warning indicators to alert the driver to part failure is not sufficient by itself to qualify the part for exemption from aging under paragraph (c)(4)(ii) of this section. The part manufacturer must demonstrate that the diagnostic and malfunction indicator system will routinely result in repair or replacement of the aftermarket part in use.

[54 FR 32588, Aug. 8, 1989]

§ 85.2115 Notification of intent to certify.

(a) At least 45 days prior to the sale of any certified automotive aftermarket part, notification of the intent to certify must be received by the Office Director.

(1) The notification shall include:

(i) Identification of each part to be certified; and.

(ii) Identification of all vehicle or engine configurations for which the part is being certified including make(s), model(s), year(s), engine size(s) and all other specific configuration characteristics necessary to assure that the part will not be installed in any configuration for which it has not been certified; and

(iii) All determinations, demonstrations, technical rationale, and documentation provided in § 85.2114; and

(iv) Any and all written waivers and approvals obtained from the MOD director as provided in § 85.2114, and any correspondence with EPA regarding certification of that part; and

(v) A description of the tests, techniques, procedures, and results utilized to demonstrate compliance with § 85.2114(b) applicable to parts eligible to certify using emission-critical parameters, except that, if the procedure utilized is recommended in appendix I of this subpart, then only a statement to this effect is necessary. A description of all statistical methods and analyses used to determine the emission-critical parameters of the original equipment parts and compliance of the certified part(s) with those parameters including numbers of parts tested, selection criteria, means, variance, etc; and

(vi) All results and documentation of tests and procedures used by the part manufacturer as evidence of compliance with the durability and emission requirements specified in § 85.2114; and

(vii) A discussion of the technical basis(es) for foregoing any portion of the Federal Test Procedure when applicable; and

(viii) A description of the test part selection criteria used, and a statement that the test part(s) used for certification testing is(are) a representative production aftermarket part(s) consistent with § 85.2114(e); and

(ix) A description of the test and demonstration vehicle selection criteria used, and rationale that supports the technical judgment that the vehicle configurations used for emission testing and durability demonstration represent worst case with respect to emissions of all those configurations for which the aftermarket part is being certified, and all data that supports that conclusion; and

(x) The service intervals of the part, including maintenance and replacement intervals in months and/or miles, as applicable, and a statement indicating whether it is different than the service, maintenance, and replacement interval of the original equipment requirements; and

(xi) A statement, if applicable, that the part will not meet the labeling requirements of § 85.2119(a) and the description of the markings the aftermarket manufacturer intends to put on the part in order to comply with § 85.2119(b); and

(xii) A statement that the aftermarket part manufacturer accepts, as a condition of certification, the obligation to comply with the warranty requirements and dispute resolution procedures provided in § 85.2117; and

(xiii) A statement of commitment and willingness to comply with all the relevant terms and conditions of this subpart; and

(xiv) A statement by the aftermarket part manufacturer that use of its certified part will not cause a substantial increase to vehicle emissions in any normal driving mode not represented during certification or compliance testing; and

(xv) The office or officer of the aftermarket part manufacturer authorized to receive correspondence regarding certification requirements pursuant to this subpart.

(2) The notification shall be signed by an individual attesting to the accuracy and completeness of the information supplied in the notification.

(3) Notification to the Agency shall be by certified mail or another method by which date of receipt can be established.

(4) Two complete and identical copies of the notification and any subsequent

industry comments on any such notification shall be submitted by the aftermarket manufacturer to: Mod Director, MOD (EN-340F), Attention: Aftermarket Parts, 401 ''M'' St. SW., Washington, DC 20460.

(5) A copy of the notification submitted under paragraph (a)(4) of this section will be placed in a public docket. Comments on any notice in the public docket may be made to the MOD Director.

(b) The MOD Director reserves the right to review an application to determine if the submitted documents adequately meet all the requirements for certification specified in §§ 85.2114 and 85.2115. A part may be sold as certified 45 days after the receipt by the Agency of the notification given pursuant to this subsection provided that the Office Director has not notified the part manufacturer otherwise.

[54 FR 32591, Aug. 8, 1989]

§ 85.2116 Objections to certification.

(a) At any time prior to the end of the 45-day period after a notification of intent to certify an aftermarket part is received as specified in § 85.2115, the MOD Director may notify the manufacturer of the aftermarket part that such aftermarket part may not be certified pending further investigation. The basis upon which this notification shall be made may include, but not be limited to, information or test results which indicate:

(1) Compliance with the applicable emission-critical parameters was not achieved or that the testing methods used to demonstrate compliance with the emission-critical parameters were inadequate;

(2) The part is to be certified on the basis of emission testing, and the procedure used in such tests was not in compliance with those portions of the Federal Test Procedure not waived pursuant to § 85.2114(d)(2).

(3) Use of the certified part may cause a vehicle to exceed any applicable emission requirements;

(4) The durability requirement of § 85.2114 has not been complied with;

(5) Use of the certified part could cause or contribute to an unreasonable risk to public health, welfare or safety in its operation or function;

(6) Installation of the certified part requires procedures or equipment which would likely cause it to be improperly installed under normal conditions or would likely result in a vehicle being misadjusted; or

(7) Information and/or data required to be in the notification of intent to certify as provided by § 85.2115 have not been provided or may be inadequate; or,

(8) Documentation submitted under § 85.2114(c)(4)(ii) was determined inadequate for durability exemption.

(b) The aftermarket part manufacturer must respond in writing to the statements made in the notification by the MOD Director, or the aftermarket part manufacturer shall withdraw its notification of intent to certify.

(1) Any party interested in the outcome of a decision as to whether a part may be certified may provide the MOD Director with any relevant written information up to ten days after the manufacturer responds to the MOD Director's objection.

(2) Any interested party may request additional time to respond to the information submitted by the part manufacturer. The MOD Director upon a showing of good cause by the interested party may grant an extension of time to reply up to 30 days.

(3) The part manufacturer may reply to information submitted by interested parties. Notification of intent to reply shall be submitted to the MOD Director within 10 days of the date information from interested parties is submitted to the MOD Director.

(4) The MOD Director may, at his or her discretion, allow oral presentations by the aftermarket manufacturer or any interested party in connection with a contested part certification.

(c) If an objection has been sent to an aftermarket part manufacturer pursuant to paragraph (a) of this section, the MOD Director shall, after reviewing all pertinent data and information, render a decision and inform the aftermarket part manufacturer in writing as to whether such part may be certified and, if so, under what conditions the part may be certified. The written decision shall include an explanation of the reasons therefor.

(1) The decision by the MOD Director shall be provided to the manufacturer within 30 working days of receipt of all necessary information by the manufacturer or interested parties, or of the date of any oral presentation regarding the certification, whichever occurs second.

(2) A copy of the decision shall be sent to all identified interested parties.

(3) Within 20 days of receipt of a decision made pursuant to this subsection, any party may file a written appeal to the Office Director. The Office Director may, in his or her discretion, allow additional oral or written submissions, prior to rendering a final decision. The schedule for such submission shall be in accordance with the schedule specified in § 85.2116(b).

(4) If no party files an appeal with the Office Director within 20 days, then the decision of the MOD Director shall be final.

(5) The Office Director shall make a final decision regarding the certification of a part within 30 working days of receipt of all necessary information by the part manufacturer or from the date of any oral presentation, whichever occurs later.

(6) A copy of all final decisions made under this section shall be published in the FEDERAL REGISTER.

[45 FR 78460, Nov. 25, 1980, as amended at 54 FR 32592, Aug. 8, 1989]

§ 85.2117 Warranty and dispute resolution.

(a) *Warranty*. (1) As a condition of certification, the aftermarket part manufacturer shall warrant that if the certified part is properly installed it will not cause a vehicle to exceed Federal emission requirements as determined by an emission test approved by EPA under section 207(b)(1) of the Act. This aftermarket part warranty shall extend for the remaining performance warranty period of any vehicle on which the part is installed, or for the warranty period specified for an equivalent original equipment component, if this period is shorter than the remaining warranty period of the vehicle.

(2) The aftermarket part manufacturer's minimum obligation under this warranty shall be to reimburse vehicle manufacturers for all reasonable expenses incurred as a result of honoring a valid emission performance warranty claim which arises because of the use of the certified aftermarket part.

(3) The procedure used to process a certified aftermarket part warranty claim is as follows. The time requirements are in units of calendar days.

(i) The vehicle manufacturer shall submit, by certified mail or another method by which date of receipt can be established, a bill for reasonable expenses incurred to the part manufacturer for reimbursement. Accompanying the bill shall be a letter to the part manufacturer with an explanation of how the certified part caused the failure and a copy of the warranty repair order or receipt establishing the date that the performance repair was initiated by the vehicle owner.

(ii) The parts retained pursuant to § 85.2107(c)(1) shall be retained until the reimbursement process is resolved. The vehicle manufacturer shall store these parts or transfer these parts to the involved certified part manufacturer for storage. If the vehicle manufacturer transfers these parts to the certified part manufacturer, the part manufacturer shall retain these parts:

(A) For at least one year from the date of repair involving these parts, if the part manufacturer does not receive a bill from the vehicle manufacturer within that time period, or

(B) Until the claim reimbursement process has been resolved, if the part manufacturer receives a bill from the vehicle manufacturer within one year of the date of repair involving these parts.

(iii) If the vehicle manufacturer transfers the parts retained pursuant to paragraph (a)(3)(ii) of this section to the part manufacturer, a bill shall be submitted to the part manufacturer within one year of the date of initiation of the actual repair by the vehicle owner. If this requirement is not met, the vehicle manufacturer shall forfeit all rights to the reimbursement provisions provided in this regulation.

(iv) Storage costs are not reimbursable as part of a performance warranty claim.

(b) *Dispute resolution*. (1) The part manufacturer shall respond to the vehicle manufacturer within 30 days of

receipt of the bill by paying the claim or requesting a meeting to resolve any disagreement. A meeting shall occur within the next two week period. At this meeting the parties shall, in all good faith, attempt to resolve their disagreement. Discussions should be completed within 60 days of receipt of the bill for the warranty claim by the part manufacturer.

(2) If the parties cannot resolve their disagreement within 60 days, either party may file for arbitration. Neither party may file for arbitration within 60 days unless both parties agree to seek arbitration prior to the end of the 60-day period. If, after 60 days, either party files, then both parties shall submit to arbitration.

(3) This arbitration shall be carried out pursuant to the Arbitration Rules contained in appendix II of this subpart which are based on Commercial Arbitration Rules published by the American Arbitration Association, revised and in effect as of September 1, 1988. The Arbitration Rules detail the procedures to be followed by the parties and the arbitrator in resolving disputes under this section. They can be varied only with the agreement of both parties. If either involved manufacturer refuses to participate in the arbitration process, that party is treated as if it had lost the arbitration and is required to pay all reasonable expenses.

(4) Any party losing the arbitration has the right to resort to an appropriate federal district court or state court, subject to the established rules of that court regarding subject matter jurisdiction and personal jurisdiction.

(5) If the vehicle manufacturer wins the arbitration, the part manufacturer must provide reimbursement in accordance with the arbitrator's award and decision. Such reimbursement must be made within 30 days of the award and decision.

(6)(i) If the part manufacturer refuses to pay a lost arbitration award, the involved part will be decertified pursuant to 40 CFR 85.2121, provided that if the part manufacturer resorts to a court of competent jurisdiction, decertification will be withheld pending the outcome of such judicial determination.

(ii) In addition, under these circumstances, the vehicle manufacturer has the right to bring an enforcement action on the arbitration award and decision in the appropriate federal district court or state court, subject to the established rules of that court regarding subject matter jurisdiction and personal jurisdiction. If this court agrees with the arbitrator's award and decision, reimbursement shall be made within 30 days of the court's decision unless the court orders otherwise.

[54 FR 32592, Aug. 8, 1989]

§ 85.2118 Changes after certification.

The aftermarket part manufacturer shall be required to recertify any part which:

(a) Was certified pursuant to § 85.2114(b) and to which modifications are subsequently made which could affect the results of any test or judgment made that the part meets all of the applicable Emission-Critical Parameters;

(b) Was certified pursuant to § 85.2114(c) and to which modifications are made which are likely to affect emissions or the capability of the part to meet any other requirement of this subpart; or

(c) Was certified and is subsequently modified in a manner affecting the durability of the part or any emission control device, engine or the vehicle upon which such part is installed.

[45 FR 78461, Nov. 25, 1980, as amended at 54 FR 32593, Aug. 8, 1989]

§ 85.2119 Labeling requirements.

(a) Except as specified in paragraph (b) of this section, each part certified pursuant to these regulations shall have ''Certified to EPA Standards'' and the name of the aftermarket part manufacturer or other party designated to determine the validity of warranty claims placed on the part. The name of the aftermarket part manufacturer or other party and the statement, ''Certified to EPA Standards,'' must be made durable and readable for at least the useful life mileage interval of the part.

(b) In lieu of the name of the aftermarket part manufacturer or other party and ''Certified to EPA Standards,'' the part may contain unique identification markings. A description of the marking and statement

that such marking is intended in lieu of the name of the aftermarket part manufacturer or other party and ''Certified to EPA Standards,'' shall be made to the Agency in the notification of intent to certify. The unique symbol shall not be used on any uncertified or decertified part built or assembled after the date of decertification.

(c) The package in which the certified aftermarket part is contained must have the following information conspicuously placed thereon:

(1) The statement ''Certified by (name of manufacturer or warranter) to EPA Emission Standards'',

(2) A list of the vehicles or engines (in accordance with § 85.2115(a)(1)(ii)) for which the part has been certified,

(3) A statement of the maintenance or replacement interval for which the part has been certified, if the interval is of a shorter duration than the interval specified in the written instructions for proper maintenance and use for the original equipment,

(4) A description of the maintenance necessary to be performed on the part in the proper maintenance and use of the part, if such maintenance is in addition to or different from that maintenance necessary on the original equipment part, and

(5) The instructions for proper installation if different from the vehicle manufacturer's recommended installation instruction for that part.

(d) The information required by paragraphs (c)(4) and (5) of this section may be provided on a written insert with the certified aftermarket part if the insert also contains the information required in paragraphs (c) (1), (2) and (3) of this section.

(e) The information required by paragraph (c)(2) of this section may be provided in a catalog rather than on the package or on an insert: *Provided*, That access to the catalog is readily available to purchasers and installers of the part.

(f) When an aftermarket part manufacturer desires to certify existing in-service stocks of its products, it may do so provided:

(1) The part does not differ in any operational or durability characteristic from the aftermarket parts specified in the notification made pursuant to § 85.2115, and

(2) A supplemental information sheet is made available to all parties selling the part.

(i) The supplemental sheet shall be made available in sufficient quantities so that it can be provided with all parts sold as certified, and

(ii) The supplemental sheet shall contain all of the information specified in paragraph (c) of this section.

[45 FR 78461, Nov. 25, 1980, as amended at 54 FR 32593, Aug. 8, 1989]

§ 85.2120 Maintenance and submittal of records.

(a) For each certified aftermarket part, the aftermarket part manufacturer must establish, maintain and retain for 5 years the following adequately organized and indexed records:

(1) Detailed production drawings showing all dimensions, tolerances, performance requirements and material specifications and any other information necessary to completely describe the part;

(2) A description of the testing program, including all production part sampling techniques used to verify compliance of the certified aftermarket part with the applicable Emission-Critical Parameters and durability requirements;

(3) All data obtained during testing of the part and subsequent analyses based on that data, including the milege and the vehicle or engine configuration determinants if emission testing is utilized as the basis for certification;

(4) All information used in determining those vehicles for which the part is represented as being equivalent from an emissions standpoint to the original equipment part;

(5) A description of the quality control plan used to monitor production and assure compliance of the part with the applicable certification requirements;

(6) All data taken in implementing the quality control plan, and any subsequent analyses of that data;

(7) A description of all the methodology, analysis, testing and/or sampling techniques used to ascertain the

emission critical parameter specifications of the originial equipment part; and

(8) All in-service data, analyses performed by the manufacturer and correspondence with vendors, distributors, consumers, retail outlets or vehicle manufacturers regarding any design, production or in-service problems associated with 25 or more of any certified part.

(b) The records required to be maintained in paragraph (a) of this section shall be made available to the Agency upon the written request of the MOD Director.

(c) For parts certified only for vehicles with less than 5 years of emission performance warranty coverage remaining, records must be kept for 3 years or until they determine that approximately 80% of the applicable vehicles are outside the warranty period, whichever occurs second.

(d) This section shall expire 5 years from the effective date of this regulation unless renewed prior to that date.

[45 FR 78461, Nov. 25, 1980]

§ 85.2121 Decertification.

(a) The MOD Director may notify an aftermarket part manufacturer that the Agency has made a preliminary determination that one or more parts should be decertified.

(1) Such a preliminary determination may be made if there is reason to believe that the part manufactured has failed to comply with §§ 85.2112 through 85.2122. Information upon which such a determination will be made includes but is not limited to the following.

(i) Tests required to be performed to demonstrate compliance of the part with the applicable Emission-Critical Parameters

(A) Were not performed on the part(s), or

(B) Were insufficient to demonstrate compliance;

(ii) The part was certified on the basis of emission tests, and

(A) The procedures used in such tests were not in substantial compliance with a portion or portions of the Federal Test Procedure which were not waived pursuant to § 85.2114(d);

(B) The emission results were not in compliance with the requirements of § 85.2114(d); or

(C) The procedures used for part aging for durability demonstration were not in substantial compliance with the durability cycle required by § 85.2114.

(iii) Use of the certified part is causing vehicle emissions to exceed emission requirements for any regulated pollutant;

(iv) Use of the certified part causes or contributes to an unreasonable risk to public health, welfare or safety or severely degrades drivability operation or function;

(v) The part has been modified in a manner requiring recertification pursuant to § 85.2118; or

(vi) The manufacturer of such parts has not established, maintained or retained the records required pursuant to § 85.2120 or fails to make the records available to the MOD Director upon written request pursuant to § 85.2120.

(vii) Documentation required to support the type of durability demonstration used for a part under § 85.2114:

(A) Were not submitted for the part, or

(B) Were insufficient to justify a claim of durability exemption status.

(viii) The aftermarket part manufacturer failed to pay a lost arbitration settlement within 30 days of the arbitrator's decision or within 30 days after completion of judicial review, if any.

(2) Notice of a preliminary determination to decertify shall contain:

(i) A description of the noncomplying part(s);

(ii) The basis for the MOD Director's preliminary decision; and

(iii) The date by which the manufacturer must

(A) Terminate the sale of the part as a certified part, or

(B) Make the necessary change (if so recommended by the Agency), and

(C) Request an opportunity in writing to dispute the allegations of the preliminary decertification.

(b) If the aftermarket part manufacturer requests an opportunity to respond to the preliminary determination, the manufacturer and other parties interested in the MOD Director's decision whether to decertify a part

may, within 15 days of the date of the request, submit written presentations, including the relevant information and data, to the MOD Director. The MOD Director, in his or her discretion, may provide an opportunity for oral presentations.

(1) Any interested party may request additional time to respond to the information submitted by the part manufacturer. The MOD Director upon a showing of good cause by the interested party may grant an extension of time to reply up to 30 days.

(2) The part manufacturer may have an extension of up to 30 days to reply to information submitted by interested parties. Notification of intent to reply shall be submitted to the MOD Director within 10 days of the date information from interested parties is submitted to the MOD Director.

(c) If a part manufacturer has disputed the allegations of the preliminary decisions, the MOD Director shall, after reviewing any additional information, notify the aftermarket part manufacturer of his or her decision whether the part may continue to be sold as certified. This notification shall include an explanation upon which the decision was made and the effective date for decertification, where appropriate.

(d) Within 20 days from the date of a decision made pursuant to paragraph (c) of this section, any adversely affected party may appeal the decision to the Office Director.

(1) A petition for appeal to the Office Director must state all of the reasons why the decision of the MOD Director should be reversed.

(2) The Office Director may, in his or her discretion, allow additional oral or written testimony.

(3) If no appeal is filed with the Office Director within the permitted time period, the decision of the MOD Director shall be final.

(e) If a final decision is made to decertify a part under paragraph (d) of this section, the manufacturer of such part shall notify his immediate customers (other than retail customers) that, as of the date of the final determination, the part in question has been decertified. The part manufacturer shall offer to replace decertified parts in the customer's inventory with certified replacement parts or, if unable to do so, shall at the customer's request repurchase such inventory at a reasonable price.

(f) Notwithstanding the requirements of paragraph (e) of this section, a part purchased by a vehicle owner as certified, shall be considered certified pursuant to this subpart.

[45 FR 78462, Nov. 25, 1980, as amended at 54 FR 32593, Aug. 8, 1989]

§ 85.2122 Emission-critical parameters.

(a) The following parts may be certified in accordance with § 85.2114(b):

(1) *Carburetor Vacuum Break (Choke Pull-Off).* (i) The emission-critical parameters for carburetor vacuum breaks are:

(A) Diaphragm Displacement.

(B) Timed Delay.

(C) Modulated Stem Displacement.

(D) Modulated Stem Displacement Force.

(E) Vacuum Leakage.

(ii) For the purposes of this paragraph:

(A) ''Diaphragm Displacement'' means the distance through which the center of the diaphragm moves when activated. In the case of a non-modulated stem, diaphragm displacement corresponds to stem displacement.

(B) ''Timed Delay'' means a delayed diaphragm displacement controlled to occur within a given time period.

(C) ''Modulated Stem Displacement'' means the distance through which the modulated stem may move when actuated independent of diaphragm displacement.

(D) ''Modulated Stem Displacement Force'' means the amount of force required at start and finish of a modulated stem displacement.

(E) ''Vacuum Leakage'' means leakage into the vacuum cavity of a vacuum break.

(F) ''Vacuum Break'' (''Choke Pull-off'') means a vacuum-operated device to open the carburetor choke plate a predetermined amount on cold start.

(G) ''Modulated Stem'' means a stem attached to the vacuum break diaphragm in such a manner as to allow stem displacement independent of diaphragm displacement.

(H) ''Vacuum Purge System'' means a vacuum system with a controlled air flow to purge the vacuum system of undesirable manifold vapors.

(2) *Carburetor Choke Thermostats.* (i) The emission-critical parameters for all Choke Thermostats are:

(A) Thermal Deflection Rate.

(B) Mechanical Torque Rate.

(C) Index Mark Position.

(ii) The emission-critical parameters for Electrically-Heated Choke Thermostats are:

(A) Those parameters set forth in paragraph (a)(2)(i) of this section

(B) Time to rotate coil tang when electrically energized

(C) Electrical circuit resistance

(D) Electrical switching temperature

(iii) For the purpose of this paragraph:

(A) ''Choke'' means a device to restrict air flow into a carburetor in order to enrich the air/fuel mixture delivered to the engine by the carburetor during cold-engine start and cold-engine operation.

(B) ''Thermostat'' means a temperature-actuated device.

(C) ''Electrically-heated Choke'' means a device which contains a means for applying heat to the thermostatic coil by electrical current.

(D) ''Thermostatic Coil'' means a spiral-wound coil of thermally-sensitive material which provides rotary force (torque) and/or displacement as a function of applied temperature.

(E) ''Thermostatic Switch'' means an element of thermally-sensitive material which acts to open or close an electrical circuit as a function of temperature.

(F) ''Mechanical Torque Rate'' means a term applied to a thermostatic coil, defined as the torque accumulation per angular degree of deflection of a thermostatic coil.

(G) ''Thermal Deflection Rate'' means the angular degrees of rotation per degree of temperature change of the thermostatic coil.

(H) ''Index or Index Mark'' means a mark on a choke thermostat housing, located in a fixed relationship to the thermostatic coil tang position to aid in assembly and service adjustment of the choke.

(I) ''PTC Type Choke Heaters'' means a positive termperature coefficient resistant ceramic disc capable of providing heat to the thermostatic coil when electrically energized.

(3) *Carburetor Accelerator Pumps.* (i) The emission-critical parameter for accelerator pumps (plungers or diaphragms) is the average volume of fuel delivered per stroke by the pump within prescribed time limits.

(ii) For the purpose of this paragraph an ''Accelerator Pump (Plunger or Diaphragm)'' means a device used to provide a supplemental supply of fuel during increasing throttle opening as required.

(4) *Positive Crankcase Ventilation (PCV) Valves.* (i) The emission-critical parameter for a PCV valve is the volume of flow as a function of pressure differential across the valve.

(ii) For the purposes of this paragraph a ''PCV Valve'' means a device to control the flow of blow-by gasses and fresh air from the crankcase to the fuel induction system of the engine.

(5) *Breaker Points.* (i) The emission-critical parameters for breaker points are:

(A) Bounce.

(B) Dwell Angle.

(C) Contact Resistance.

(ii) For the purposes of this paragraph:

(A) ''Breaker Point'' means a mechanical switch operated by the distributor cam to establish and interrupt the primary ignition coil current.

(B) ''Bounce'' means unscheduled point contact opening(s) after initial closure and before scheduled reopening.

(C) ''Dwell Angle'' means the number of degrees of distributor mechanical rotation during which the breaker points are conducting current.

(D) ''Contact Resistance'' means the opposition to the flow of current between the mounting bracket and the insulated terminal.

(6) *Capacitors/Condensers.* (i) The emission-critical parameters for capacitors/condensers are:

(A) Capacitance.

(B) Series Resistance.

(C) Breakdown Voltage.

(ii) For the purposes of this paragraph:

(A) ''Capacitance'' means the property of a device which permits storage of electrically-separated charges when differences in electrical potential exist between the conductors and measured as the ratio of stored charge to the difference in electrical potential between conductors.

(B) ''Series Resistance'' means the sum of resistances from the condenser plates to the condenser's external connections.

(C) ''Breakdown Voltage'' means the voltage level at which the capacitor fails.

(D) ''Capacitor/Condenser'' means a device for the storage of electrical energy consisting of two oppositely charged conducting plates separated by a dielectric and which resists the flow of direct current.

(7) *Distributor Caps and/or Rotors.* (i) The emission-critical parameters for distributor caps and/or rotors are:

(A) Physical and Thermal Integrity.

(B) Dielectric Strength.

(C) Flashover.

(ii) For the purposes of this paragraph:

(A) ''Flashover'' means the discharge of ignition voltage across the surface of the distributor cap and/or rotor rather than at the spark plug gap.

(B) ''Dielectric Strength'' means the ability of the material of the cap and/or rotor to resist the flow of electric current.

(C) ''Physical and Thermal Integrity'' means the ability of the material of the cap and/or rotor to resist physical and thermal breakdown.

(8) *Spark Plugs.* (i) The emission critical parameters for spark plugs are:

(A) Heat Rating.

(B) Gap Spacing.

(C) Gap Location.

(D) Flashover.

(E) Dielectric Strength.

(ii) For the purposes of this paragraph:

(A) ''Spark Plug'' means a device to suitably deliver high tension electrical ignition voltage to the spark gap in the engine combustion chamber.

(B) ''Heat Rating'' means that measurement of engine indicated mean effective pressure (IMEP) value obtained on the engine at a point when the supercharge pressure is 25.4mm (one inch) Hg below the preignition point of the spark plug, as rated according to SAE J549A Recommended Practice.

(C) ''Gap Spacing'' means the distance between the center electrode and the ground electrode where the high voltage ignition arc is discharged.

(D) ''Gap Location'' means the position of the electrode gap in the combustion chamber.

(E) ''Dielectric Strength'' means the ability of the spark plug's ceramic insulator material to resist electrical breakdown.

(F) ''Flashover'' means the discharge of ignition voltage at any point other than at the spark plug gap.

(9) *Inductive System Coils.* (i) The emission-critical parameters for inductive system coils are:

(A) Open Circuit Voltage Output.

(B) Dielectric Strength.

(C) Flashover.

(D) Rise Time.

(ii) For the purposes of this paragraph:

(A) ''Coil'' means a device used to provide high voltage in an inductive ignition system.

(B) ''Flashover'' means the discharge of ignition voltage across the coil.

(C) ''Dielectric Strength'' means the ability of the material of the coil to resist electrical breakdown.

(D) ''Rise Time'' means the time required for the spark voltage to increase from 10% to 90% of its maximum value.

(10) *Primary Resistors.* (i) The emission-critical parameter for primary resistors is the DC resistance.

(ii) For the purpose of this paragraph, a ''Primary Resistor'' means a device used in the primary circuit of an inductive ignition system to limit the flow of current.

(11) *Breaker Point Distributors.* (i) The emission-critical parameters for breaker point distributors are:

(A) Spark Timing.

(*1*) Centrifugal Advance Characteristics.

(*2*) Vacuum Advance Characteristics.

(B) Dwell Angle.

(C) Breaker point contact operation.

(D) Electrical resistance to ground.

(E) Capacity for compatibility with generally available original equipment and certified replacement parts listed in § 85.2112(a) (5), (6), (7), and (9).

(ii) For the purposes of this paragraph:

(A) ''Distributor'' means a device for directing the secondary current from the induction coil to the spark plugs at the proper intervals and in the proper firing order.

(B) ''Distributor Firing Angle'' means the angular relationship of breaker point opening from one opening to the next in the firing sequence.

(C) ''Dwell Angle'' means the number of degrees of distributor mechanical rotation during which the breaker points are capable of conducting current.

(12) *Engine Valves.* [Reserved]

(13) *Camshafts.* [Reserved]

(14) *Pistons.* [Reserved]

(15) *Oxidizing Catalytic Converter.* (i) The emission-critical parameters for oxidizing catalytic converters are:

(A) Conversion Efficiency.

(B) Light-off Time.

(C) Mechanical and Thermal Integrity.

(ii) For the purposes of this paragraph including the relevant test procedures in the appendix:

(A) ''Catalytic Converter'' means a device installed in the exhaust system of an internal combustion engine that utilizes catalytic action to oxidize hydrocarbon (HC) and carbon monoxide (CO) emissions to carbon dioxide (CO_2) and water (H_2O).

(B) ''Conversion Efficiency'' means the measure of the catalytic converter's ability to oxidize HC/CO to CO_2/H_2O under fully warmed-up conditions stated as a percentage calculated by the following formula:

$$\frac{\text{Inlet conc.} - \text{outlet conc.}}{\text{Inlet conc.}} \times 100$$

(C) ''Light-off Time'' or ''LOT'' means the time required for a catalytic converter (at ambient temperature 68–86 °F) to warm-up sufficiently to convert 50% of the incoming HC and CO to CO_2 and H_2 O.

(D) ''Peak Air Flow'' means the maximum engine intake mass air flow rate measure during the 195 second to 202 second time interval of the Federal Test Procedure.

(E) ''Feed Gas'' means the chemical composition of the exhaust gas measured at the converter inlet.

(F) ''Aged Catalytic Converter'' means a converter that has been installed on a vehicle or engine stand and operated thru a cycle specifically designed to chemically age, including exposure to representative lead concentrations, and mechanically stress the catalytic converter in a manner representative of in-use vehicle or engine conditions.

(G) ''Mechanical and Thermal Intergrity'' means the ability of a converter to continue to operate at its previously determined efficiency and light-off time and be free from exhaust leaks when subject to thermal and mechanical stresses representative of the intended application.

(16) *Air Cleaner Filter Element.* (i) The emission-critical parameters for Air Cleaner Filter Elements are:

(A) Pressure drop.

(B) Efficiency.

(ii) For the purpose of this paragraph:

(A) ''Air Cleaner Filter Element'' means a device to remove particulates from the primary air that enters the air induction system of the engine.

(B) ''Pressure Drop'' means a measure, in kilopascals, of the difference in static pressure measured immediately upstream and downstream of the air filter element.

(C) ''Efficiency'' means the ability of the air cleaner or the unit under test to remove contaminant.

(17) *Electronic Inductive Ignition System and Components.* [Reserved]

(18) *Electronic Inductive Distributors.* [Reserved]

(b) *Additional part standards.* [Reserved]

[45 FR 78462, Nov. 25, 1980, as amended at 54 FR 32593, Aug. 8, 1989]

§ 85.2123 Treatment of confidential information.

(a) Any manufacturer may assert that some or all of the information submitted pursuant to this subpart is entitled to confidential treatment as provided by 40 CFR part 2, subpart B.

(b) Any claim of confidentiality must accompany the information at the time it is submitted to EPA.

(c) To assert that information submitted pursuant to this subpart is confidential, a manufacturer must indicate clearly the items of information claimed confidential by marking, circling, bracketing, stamping, or otherwise specifying the confidential information. Furthermore, EPA requests, but does not require, that the submitter also provide a second copy of its submittal from which all confidential information shall be deleted. If a need arises to publicly release nonconfidential information, EPA will assume that the submitter has accurately deleted all confidential information from this second copy.

(d) If a claim is made that some or all of the information submitted pursuant to this subpart is entitled to confidential treatment, the information covered by that confidentiality claim will be disclosed by the Administrator only to the extent and by means of the procedures set forth in part 2, subpart B, of this chapter.

(e) Information provided without a claim of confidentiality at the time of submission may be made available to the public by EPA without further notice to the submitter, in accordance with 40 CFR 2.204(c)(2)(i)(A).

[50 FR 34798, Aug. 27, 1985]

APPENDIX I TO SUBPART V OF PART 85—RECOMMENDED TEST PROCEDURES AND TEST CRITERIA AND RECOMMENDED DURABILITY PROCEDURES TO DEMONSTRATE COMPLIANCE WITH EMISSION CRITICAL PARAMETERS

A. CARBURETOR VACUUM BREAK (CHOKE PULL-OFF)

1. *Test Procedure and Criteria*

a. Vacuum leakage: Apply 457 ±13 mm (18.0 ±0.5 inches) Hg. vacuum to the vacuum unit to achieve full diaphragm displacement. Seal vacuum source to unit. There shall be no visible loss of diaphragm displacement or drop in vacuum gauge reading after a 15 second observation. Vacuum purge system and diaphragm displacement adjusting screw holes should be temporarily sealed during this test when applicable.

b. Diaphragm displacement: At stabilized temperature of −29 °C and 121 °C (−20 °F and 250 °F) with 457 ±13 mm (18.0 ±0.5 inches) Hg. vacuum applied to unit, the diaphragm displacement shall be within ±1 mm (0.04 inches) of the nominal original equipment displacement. The vacuum purge system must be open during this test when applicable. Adjusting screws that limit displacement should be temporarily removed and adjusting screw holes temporarily sealed during this test.

c. Timed delay (when applicable): With 457 ±13 mm (18.0 ±0.5 inches) Hg. applied to the unit, the vacuum break diaphragm displacement shall occur within ±20% of the original equipment time over the specified range of displacement. The diaphragm displacement shall be timed over the same distance for the original equipment as the replacement part and shall not be less than 60% of the total displacement range. The vacuum purge system must be open and the adjusting screw holes should be temporarily sealed during this test when applicable.

d. Modulated stem displacement (when applicable): With a force sufficient to extend the modulated stem to its full displacement, the displacement shall be within ±0.8 mm (±0.03 inches) of the original equipment specification.

e. Modulated stem displacement force (when applicable): The force required to start and finish the modulated stem displacement shall be within ±35% of the original equipment specification for forces up to 142 grams (5 ounces) and shall be within ±20% of the original equipment specification for forces exceeding 142 grams (5 ounces).

2. *Durability Procedures:* After 250,000 full displacement cycles (from atmospheric pressure to a minimum of 530mm (21 inches) Hg. vacuum at a temperature of 79 °C (175 °F)) in air, the following conditions shall be met:

a. Diaphragm displacement shall not degrade more than 10% from the original test measurements of paragraph 1.b. above.

b. Timed delay shall not degrade more than 10% from the original test measurement in paragraph 1.c. above.

c. Following these tests, the units must be free of visible defects.

B. CARBURETOR CHOKE THERMOSTATS

1. *Test Procedures and Criteria*

a. All chokes

i. *Thermal deflection rate*

When tested on a suitable fixture, the deflection rate shall be within ±6% of the original equipment value. The initial temperature and final temperature for purposes of this test may vary but shall exhibit a test temperature range of at least 44 °C (80 °F). Recommended test equipment, test procedures, and associated calculations are outlined in ASTM B389 (latest revision) or American National Standards Institute Z155–20.

ii. *Mechanical torque rate*

When tested on a suitable fixture, the torque rate shall be within ±12% of the mean original equipment value. Recommended test equipment, test procedures, and associated

calculations are outlined in ASTM B362 (latest revision) or American National Standards Institute Z155–18 (latest revision).

iii. *Index mark position*

When stabilized for four hours at room temperature, the relative position of the thermostatic coil outer tang or loop and the index mark, when corrected to 24 °C (75 °F), shall be within ±5 angular degrees of the mean original equipment positions.

b. Electrically-heated Chokes

i. *Time to rotate coil tang*

When tested on a suitable fixture, the time to rotate through a prescribed angle at a prescribed temperature and prescribed voltage, for the specfic choke device under test shall be within ±12 seconds or ±25% of the mean original equipment value whichever is greater.

ii. *Electrical circuit resistance*

In an electrically-heated choke utilizing PTC type choke heater, the circuit resistance shall be within ±1.5 ohms of the mean original equipment value at 24 ±3 °C (75° ±5 °F) unenergized.

iii. *Electrical switching temperature*

In an electrically heated choke thermostat utilizing a thermostatic disc switch in the electrical circuit, the temperature to open the circuit shall be within ±5.5 °C (10 °F) and the temperature to close the circuit shall be within ±11 °C (20 °F) of the mean original equipment value. Circuit opening temperature shall be measured on a decreasing temperature change, and the circuit closing temperature shall be measured on an increasing temperature change.

C. CARBURETOR ACCELERATOR PUMPS

1. *Test Procedure and Criteria*

a. Expose plunger or diaphragm assembly to temperatures of −30 °C (−20 °F) for 70 hours and at 70 °C (158 °F) for 24 hours, with a commercial grade fuel or equivalent.

b. Within one hour after temperature exposure of 1.a. above, each plunger or diaphragm assembly, when installed in an applicable carburetor or test fixture, shall at room temperature deliver a volume of test fluid (Stoddard solvent or equivalent) from a 10 stroke cycle,* within ±30% of the volume from a 10 stroke cycle of an original equipment plunger or diaphragm assembly.

2. *Durability Procedure:* After 250,000 operational cycles, at approximately 30 cycles per minute at room temperature in test fluid, the output of the plunger/diaphragm shall not drop below 90% of the low limit as established in 1.b.

D. POSITIVE CRANKCASE VENTILATION (PCV) VALVE

1. *Test Procedure and Criteria*

a. Measure the flow of the PCV valve in standard cubic feet per minute (SCFM) vs. pressure differential across the valve over a range of operating pressures from 4–22 inches Hg., at standard atmospheric conditions (21.1 °C (70 °F) at 755mm (29.92 inches).

b. A PCV valve shall flow within the vehicle manufacturer's specifications or shall meet the following criteria: Whenever the mean of the original equipment flow curve is below 1 SCFM, a maximum deviation of the mean replacement PCV valve shall not exceed ±0.1 SCFM. Whenever the mean original equipment curve is equal to or greater than 1 SCFM, a maximum deviation of the mean of the replacement PCV valve shall not exceed ±10%. The total flow tolerance of the replacement valve shall not exceed the original equipment variation from the mean, at any pressure differential.

2. *Durability Procedure:* The flow of any specific PCV valve must not deviate from the flow curve of the original equipment PCV valve by more than the total original allowable tolerance when each is similarly operated in the intended vehicle application over the service interval stated by the certifier.

E. BREAKER POINTS

1. *Test Procedures and Criteria*

a. Set up test system circuit and equipment per Figure 1 with an OE breaker point assembly. Connect the primary to a 14 ±.5 V DC regulated power supply.

b. Record dwell angle and open-circuit output voltage at 300 and 500 distributor rpm and at 500 rpm intervals up to the maximum speed of the intended application.

c. Insert the replacement part in the test system and repeat the observations per b above under identical test conditions.

d. The data observed with the replacement part in the system must meet the following criteria:

(1) The dwell angle change: Not to exceed that of the original equipment by more than ±2° at all measured rpm intervals.

**10 stroke cycle:* 10 strokes from closed throttle plate position to wide open throttle plate position occurring within a 15–25 second time period.

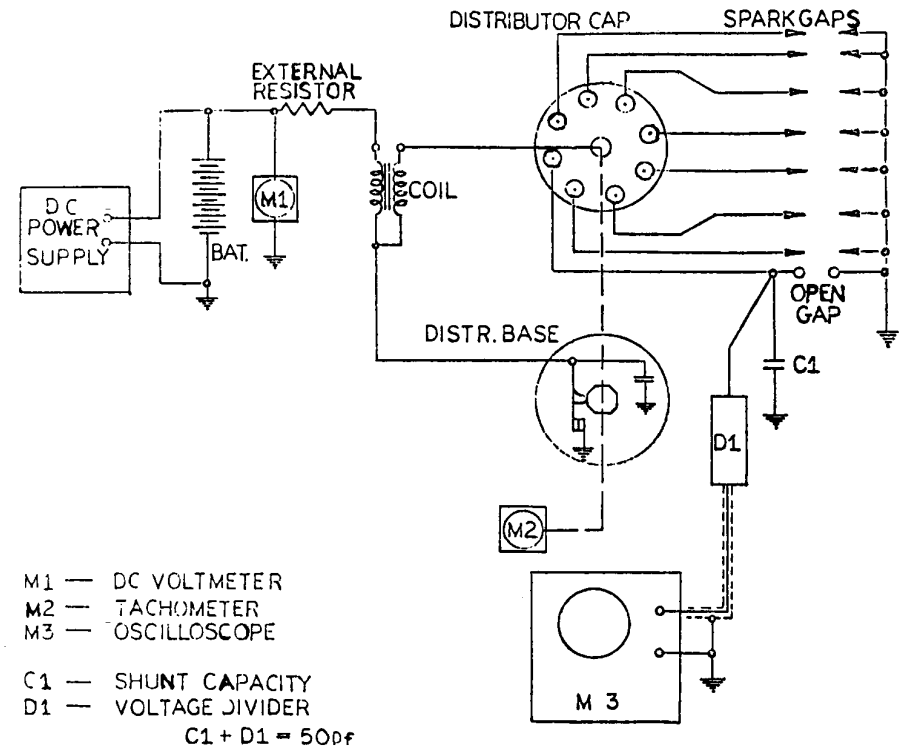

FIGURE I

(2) The open circuit output voltage (M–3): Not less than 90% of the OE breaker point assembly at any measured rpm.

e. Repeat step c above at −40 °C (−40 °F) and 100 °C (212 °F).

f. The breaker points shall operate without evidence of point bounce at all test speeds and temperatures and shall operate easily without binding when operated manually.

2. *Durability Procedures*

a. Set up a bench ignition system using an applicable distributor or electro-mechanical equivalent.

b. Install the breaker point assembly under test in the distributor, lubricate and adjust per applicable vehicle manufacturer's specifications. Use applicable coil, primary resistor, capacitor, cap and rotor.

c. Connect the primary of the test system with a power supply regulated at 14 ±0.5 V DC for a 12V system.

d. The secondary portion of the test system is to be connected to a 12 ±2KV spark gap.

e. An external heat source shall generate an ambient temperature of 70° (158 °F) for the distributor.

f. Drive the distributor at 1750 ±50 rpm for 200 hours. After each 50 hour interval, run the distributor for 5 minutes with one open circuit spark gap instead of a 12KV gap.

g. The replacement breaker point assembly must have the capability of performing throughout the duration of the test without evidence of any failure resulting in loss of spark in the 12KV spark gap.

h. After the 200 hours repeat step 1.c. above. The open circuit output voltage must be at least 90% of that measured in 1.c.

F. CAPACITORS/CONDENSERS

1. *Test Procedures and Criteria*

a. The electrostatic capacitance of the replacement condenser shall be within ±20% of the value of the original part at 20 ±3 °C (68 ±5 °F). The capacitance is to be measured on

a capacitance bridge having an accuracy of ±1% at 1 KHz frequency.

b. Set up the test system in accordance with Figure 1. The condenser series resistance shall be such that the output voltage at 500 distributor rpm with the replacement condenser shall not be less than 90% of the output voltage (M–3) with the original equipment condenser.

c. The capacitor must be able to withstand a minimum test voltage of 500V DC for a minimum of 0.1 seconds without failure.

d. (1) Measure capacitance after 4 hours minimum soak at 70° (158 °F).

(2) After one hour at room temperature, place capacitor at −18 °C (0 °F) for 4 hours minimum and measure capacitance.

(3) Place capacitor at room temperature for 4 hours minimum and measure capacitance.

e. After thermal cycling, repeat 1.a. and b. The results must be within ±10 percent of the intital measurements.

2. *Durability Procedure*

a. Set up a bench ignition system using an applicable distributor or an electro-mechanical equivalent.

b. Install the capacitor under test in the distributor adjusted to applicable vehicle manufacturer's specifications. Use applicable coil, primary resistor, breaker points, cap and rotor.

c. Connect the primary of the test system with a power supply regulated at 14 ±0.5V DC for 12V system.

d. The secondary portion of the test system is to be connected to a 12 ±2KV spark gap.

e. An external heat source shall generate an ambient temperature of 70 °C (158 °F) for the distributor.

f. Drive the distributor at 1750 ±50 rpm for 200 hours. After each 50 hour interval, run the distributor for 5 minutes with one open circuit spark gap instead of a 12KV gap.

g. The replacement part must have the capability of performing throughout the duration of the test without evidence of any failure resulting in loss of spark in the 12KV spark gap.

h. After the 200 hours, the condenser shall be within 10 percent of the capacitance and voltage measured in 1.a. and b. respectively.

G. DISTRIBUTOR CAPS AND/OR ROTORS

1. *Test Procedures and Criteria*

a. Set up test system in accordance with the circuit and equipment per Figure 1 with OE distributor cap and/or rotor. Connect the primary to a 14 ±.5V DC regulated power supply.

b. Record open circuit output voltage (M–3) at 300 and 500 distributor rpm and at intervals of 500 distributor rpm up to the maximum speed of the intended application.

c. Insert the intended replacement part(s) in the system and repeat step b. above under identical test conditions.

d. Subject the intended replacement part to the following thermal sequence through five complete cycles:

1. 12 hours at −40 °C (−40 °F)
2. 2 hours at room temperature
3. 4 hours at 100 °C (212 °F)
4. 2 hours at room temperature.

e. Repeat step b. above with the replacement part(s).

f. The output voltages measured with the replacement part(s) in the system must be at least 90% of the output voltage with the OE cap and/or rotor.

2. *Durability Procedures*

a. Set up test system in accordance with circuit and equipment per Figure 1.

b. Install the cap and/or rotor under test in distributor, lubricate and adjust per applicable vehicle manufacturer's specifications. Use equivalent coil, primary resistor, breaker points and capacitor.

c. Connect the primary of the test system with a power supply regulated at 14 ±0.5 V D.C.

1. In breaker point operated systems, connect secondary to a 12 KV±2 KV gap.

2. In electronic ignition systems, connect secondary to a gap equivalent to at least 50% of peak open-circuit voltage.

d. An external heat source shall generate an ambient temperature of 70° (158 °F) for the distributor.

e. Distributor shall be driven at 1750 ±50 rpm for 200 hours. After each 50 hours interval, run the distributor for 5 minutes with one open-circuit spark gap instead of a 12KV gap.

f. The replacement part(s) must have the capability of performing throughout the duration of the test without evidence of any failure resulting in loss of spark at the spark gap.

g. Repeat step 1.c. above. The open circuit output voltage must be at least 90% of that measured in step 1.c.

h. The replacement cap and/or rotor must be free of any visual cracks, arcing or melting.

H. SPARK PLUGS

1. *Test Procedures and Criteria*

a. Heat rating: When comparatively rated in the SAE 17.6 Spark Plug Rating engine according to the SAE J549A Recommended Practice, the comparative average rating of at least five (5) replacement spark plugs shall be within 15 percent of the average IMEP of at least five (5) OE spark plugs.

b. Gap spacing: The electrode spark gap shall be equivalent or adjustable to the recommended gap for the original equipment spark plug.

c. Gap location: The electrode gap position in the chamber shall be the same as specified by the vehicle manufacturer.

d. Flashover: The spark plug terminal end, with the properly fitted connecting boot, shall not flash-over at peak anticipated voltage for the intended application when electrode gap is 15% larger than vehicle manufacturer's gap specifications.

I. INDUCTIVE SYSTEM COILS

1. *Test Procedures and Criteria*

a. Set up the circuit in accordance with Figure 1. Operate the circuit by an applicable distributor or equivalent triggering device and applicable primarly resistor with a 50 pf load at 14.0 ±0.50 volts DC input as applicable and stabilized at an ambient temperature of 20 °C ±3 °C (68 °F ±5 °F).

b. With the original equipment coil installed, record the predominant minimum peak voltage and rise time at 300 and 500 distributor rpm, and at 500 rpm intervals up to the maximum intended operating speed. The measurement is to be taken after 4 minutes operation at each speed.

c. Install the replacement coil to be tested and repeat step b. above.

d. The replacement coil shall have an open-circuit output voltage (M–3) at least 90% of the OE coil output voltage and a rise time not to exceed 110% of original equipment coil at each distributor test speed.

2. *Durability Procedure*

a. Install the replacement ignition coil in the ignition system using the applicable rotor, cap, capacitor, breaker points, and primary resistor.

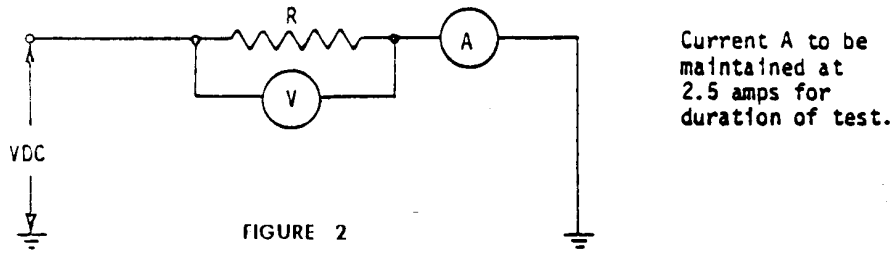

FIGURE 2

b. Operate the circuit with a regulated power supply of 14.0 ±.5 volts DC connected to the primary at an ambient temperature of 70 °C (158 °F) at 1750 ±50 distributor rpm for a duration of 200 hours. After each 50 hour interval, run the distributor for 5 minutes with one open-circuit spark gap instead of a 12KV gap.

c. The ignition coil shall perform throughout the test without any evidence of coil failure which would result in the loss of the spark in the 12 KV spark gap.

d. Repeat Step 1.c. above. The open-circuit output voltage must be at least 90% of that measured in 1.c.

J. PRIMARY RESISTORS

1. *Test Procedures and Criteria.*

a. Configure the circuit shown in Figure 2, using the original equipment resistor.

b. At 20 ±3 °C (68 ±5 °F), apply voltage for 15 minutes; maintain current at 2.5 amps. At conclusion of 15 minutes, read voltage and current. Calculate resistance using the relationship

$R = E/I$,

where:

R = Resistance in ohms,

E = Voltage (V) in volts,

I = Current (A) in amps.

c. Replace OE test sample with part to be certified and repeat step b. above.

d. Resistance of the part shall be within ±20% of original equipment resistance.

2. *Durability Procedure.*

a. Using the circuit shown in Figure 1, apply current at 70 °C (150 °F), for 200 hours.

b. After 200 hours retest as in step 1.c. above, and verify that resistance is within ±20% of the value as measured in step 1.b. above.

K. DISTRIBUTORS—BREAKER POINT

1. *Test Procedures and Criteria.*

a. Using an appropriate test installation, operate the distributor through its intended speed range.

b. The advance mechanism shall function within the tolerance of the vehicle manufacturer's original specification over the speed range of the intended application as to vacuum and centrifugal advance.

c. The advance mechanism shall repeatedly return to the zero setting

±0.5 distributor degrees after advancing and retarding through the operating range.

d. The distributor firing angle accuracy shall remain within the originally specified tolerances throughout the speed range of the intended application.

e. The distributor shall be capable of maintaining the dwell angle of the original equipment specification with ±2 degrees throughout the speed range of the intended application.

f. The distributor shall be capable of open-circuit output voltage (M–3) equal to at leat 90 percent of the voltage produced by the original equipment system over the speed range of the intended application.

2. *Durability Procedure.*

a. At an ambient temperature of 70 °C (150 °F), operate the distributor at 1750 ±50 rpm for 200 hours.

b. The distributor must meet the requirements of paragraph 1.b. through f. after the 200 hours.

L. RESERVED FOR ENGINE VALVES

M. RESERVED FOR CAMSHAFTS

N. RESERVED FOR PISTONS

O. OXIDIZING CATALYTIC CONVERTERS

1. *Test Procedures and Criteria.*

(a) The fresh and aged conversion efficiencies of the replacement oxidizing catalytic converter shall be equal to or exceed those of the original equipment converter for CO and HC emissions. The fresh and aged Light-off Time (LOT) of the replacement converter shall be equal to or less than those of the original equipment converter for CO and HC emissions. These parameters shall be determined for both fresh and aged converters under the same conditions using the following steady state feed gas concentrations and conditions for LOT and Conversion Efficiency respectively:

	LOT	Conversion efficiency
Exhaust mass flow rate.	See note (2)	See note (1).
Total hydrocarbons	See note (3)	See note (3).
Carbon monoxide	1.0 to 2.5%	1.0 to 2.5%.
Hydrogen	0.33 × % CO maximum.	0.33 × % CO maximum.
Oxygen	1.5 × % CO minimum.	1.5 × % CO minimum.
Converter inlet gas temperature.	650 °F to 850 °F ..	650 °F to 850 °F.

NOTE 1: Not less than peak air flow of the vehicle or engine configuration being certified for. If more than one vehicle or engine application is to be covered by a generic converter, the greatest peak vehicle or engine air flow shall be used.

NOTE 2: Between 0.10 and 0.40 times the value determined in Note 1.

NOTE 3: 500–2000 parts per million by volume minimum based on Methane calibration. If a non-engine simulator gas source is used, a mixture ratio of 10% propane to 90% propylene by volume will constitute an acceptable synthetic for total exhaust hydrocarbons.

(i) LOT tests shall be conducted by exposing the converter to a step change in temperature, from ambient to that specified above: 650°–850 °F. Converter inlet and outlet exhaust emissions as measured. Light-off Time is then determined by recording the time required for the converter to reduce the outlet emissions (HC and CO) to 50% of the inlet emissions, on a volumetric concentration basis, measured from the step temperature change.

(ii) Conversion efficiency measurements shall be obtained by passing stabilized-feed gas through the converter (at conditions specified above) and making simultaneous measurements of inlet and outlet emission volume concentrations. The conversion efficiency for CO and HC is then calculated.

(iii) The particular conditions for which LOT and conversion efficiency are measured (i.e., exhaust mass flow rate, total hydrocarbons, carbon monoxide, hydrogen, oxygen, and converter inlet temperature) for the replacement converter and original equipment converter tests must not vary from one another by more than 10%.

(b) Fresh and aged catalytic converters may be obtained by operating the converter on individual vehicle or engine application for which it is intended on the Federal Test Procedure road durability driving cycle. A fresh converter results when the converter has operated between 2000 and 5000 miles or equivalent hours. An aged converter results when the converter has been operated for the warranted life of the original equipment converter.

(c) Where one generic converter is intended to cover multiple vehicle or engine configurations, converter aging may be obtained per Paragraph (b) above, on a vehicle or engine which represents the greatest peak air flow of the group of vehicle configurations to be covered, and whose calibration and feed gas concentrations are representative of the vehicle or engine configurations being certified for.

2. *Other Considerations.*

(a) Replacement converter must fit within the width and length space envelope of the original equipment converter. Converter spacing from the underbody and for ground clearance must be the same or greater than the original equipment converter application.

(b) Pressure drop measured between inlet and outlet pipe interconnecting points on the replacement converter shall be within ±25% of similar measurements for the original equipment converter being replaced, when measured at each of three flow conditions 50 SCFM, 100 SCFM, and 150 SCFM

with a suitable fluid medium such as air. Maximum allowable exhaust gas leakage from the replacement coverter shall be 0.4 cubic feet per minute measured at 4.0 pounds per square inch differential. All measurements must be normalized to equal density conditions.

(c) Converter skin temperature shall be measured during the converter efficiency test. The skin temperature for the replacement converter must equal or be less than that for the original equipment converter.

P. AIR CLEANER FILTER ELEMENT

1. *Test Procedures and Criteria.*

(a) Using test equipment and procedures specified in SAE-J726c, perform:

(i) Air Flow and Pressure Drop Test (2.3) at 200 SCFM, record test conditions and pressure drop.

(ii) Efficiency Test (2.4) to measure full life efficiency at 200 SCFM to a total pressure drop of 9 inches of water, record test conditions and test duration from first to last addition of standard dust, weigh test element and absolute filter at end of test using three randomly selected original equipment air filter elements.

(b) Perform tests as in (a) above, under conditions controlled to within ±10% of the corresponding original equipment test conditions, for three randomly selected replacement air filter elements.

(c) The replacement air filter element average recorded test results. The pressure drop in (i) and absolute filter weight in (ii) must be equal to or less than those average results for the original equipment test results. The replacement air filter averaged test results for element weight in (ii) must be equal to or larger than averaged result for the original equipment averaged test results.

2. *Durability Procedure.*

(a) After use in the intended vehicle or engine application for the recommended service interval, the replacement element shall evidence an increase in pressure drop (as measured in 1 (a)(i) above) equal to or less than that of the original equipment air filter element tested in the identical manner.

[45 FR 78464, Nov. 25, 1980, as amended at 54 FR 32593, Aug. 8, 1989]

APPENDIX II TO SUBPART V OF PART 85—ARBITRATION RULES

Part A—Pre-Hearing

Section 1: Initiation of Arbitration

Either party may commence an arbitration under these rules by filing at any regional office of the American Arbitration Association (the AAA) three copies of a written submission to arbitrate under these rules, signed by either party. It shall contain a statement of the matter in dispute, the amount of money involved, the remedy sought, and the hearing locale requested, together with the appropriate administrative fee as provided in the Administrative Fee Schedule of the AAA in effect at the time the arbitration is filed. The filing party shall notify the MOD Director in writing within 14 days of when it files for arbitration and provide the MOD Director with the date of receipt of the bill by the part manufacturer.

Unless the AAA in its discretion determines otherwise and no party disagrees, the Expedited Procedures (as described in Part E of these Rules) shall be applied in any case where no disclosed claim or counterclaim exceeds $32,500, exclusive of interest and arbitration costs. Parties may also agree to the Expedited Procedures in cases involving claims in excess of $32,500.

All other cases, including those involving claims not in excess of $32,500 where either party so desires, shall be administered in accordance with Parts A through D of these Rules.

Section 2: Qualification of Arbitrator

Any arbitrator appointed pursuant to these Rules shall be neutral, subject to disqualification for the reasons specified in Section 6. If the parties specifically so agree in writing, the arbitrator shall not be subject to disqualification for said reasons.

The term ''arbitrator'' in these rules refers to the arbitration panel, whether composed of one or more arbitrators.

Section 3: Direct Appointment by Mutual Agreement of Parties

The involved manufacturers should select a mutually-agreeable arbitrator through which they will resolve their dispute. This step should be completed within 90 days from the date of receipt of the warranty claim bill by the part manufacturer.

Section 4: Appointment From Panel

If the parties have not appointed an arbitrator and have not provided any other method of appointment, the arbitrator shall be appointed in the following manner: 90 days from the date of receipt of the warranty claim bill by the part manufacturer, the AAA shall submit simultaneously to each party to the dispute an identical list of names of persons chosen from the National Panel of Commercial Arbitrators, established and maintained by the AAA.

Each party to the dispute shall have ten days from the mailing date in which to cross off any names objected to, number the remaining names in order of preference, and return the list to the AAA. If a party does not return the list within the time specified, all persons named therein shall be deemed acceptable. From among the persons who

have been approved on both lists, and in accordance with the designated order of mutual preference, the AAA shall invite the acceptance of an arbitrator to serve. If the parties fail to agree on any of the persons named, or if acceptable arbitrators are unable to act, or if for any other reason the appointment cannot be made from the submitted lists, the AAA shall have the power to make the appointment from among other members of the panel without the submission of additional lists.

Section 5: Number of Arbitrators; Notice to Arbitrator of Appointment

The dispute shall be heard and determined by one arbitrator, unless the AAA in its discretion, directs that a greater number of arbitrators be appointed.

Notice of the appointment of the arbitrator shall be mailed to the arbitrator by the AAA, together with a copy of these rules, and the signed acceptance of the arbitrator shall be filed with the AAA prior to the opening of the first hearing.

Section 6: Disclosure and Challenge Procedure

Any person appointed as an arbitrator shall disclose to the AAA any circumstance likely to affect impartiality, including any bias or any financial or personal interest in the result of the arbitration or any past or present relationship with the parties or their representatives. Upon receipt of such information from the arbitrator or another source, the AAA shall communicate the information to the parties and, if it deems it appropriate to do so, to the arbitrator and others. Upon objection of a party to the continued service of an arbitrator, the AAA shall determine whether the arbitrator should be disqualified and shall inform the parties of its decision, which shall be conclusive.

Section 7: Vacancies

If for any reason an arbitrator should be unable to perform the duties of the office, the AAA may, on proof satisfactory to it, declare the office vacant. Vacancies shall be filled in accordance with the applicable provisions of these rules.

In the event of a vacancy in a panel of arbitrators after the hearings have commenced, the remaining arbitrator or arbitrators may continue with the hearing and determination of the controversy, unless the parties agree otherwise.

Section 8: Interpretation and Application of Rules

The arbitrator shall interpret and apply these rules insofar as they relate to the arbitrator's powers and duties. When there is more than one arbitrator and a difference arises among them concerning the meaning or application of these rules, it shall be decided by a majority vote. If that is unobtainable, either an arbitrator or a party may refer the question to the AAA for final decision. All other rules shall be interpreted and applied by the AAA.

Section 9: Administrative Conference and Preliminary Hearing

At the request of any party or at the discretion of the AAA, an administrative conference with the AAA and the parties and/or their representatives will be scheduled in appropriate cases to expedite the arbitration proceedings.

In large or complex cases, at the request of any party or at the discretion of the arbitrator or the AAA, a preliminary hearing with the parties and/or their representatives and the arbitrator may be scheduled by the arbitrator to specify the issues to be resolved, stipulate to uncontested facts, and to consider any other matters that will expedite the arbitration proceedings. Consistent with the expedited nature of arbitration, the arbitrator may, at the preliminary hearing, establish (i) the extent of and the schedule for the production of relevant documents and other information, (ii) the identification of any witnesses to be called, and (iii) a schedule for further hearings to resolve the dispute.

Section 10: Fixing of Locale

The parties may mutually agree on the locale where the arbitration is to be held. If any party requests that the hearing be held in a specific locale and the other party files no objection thereto within ten days after notice of the request has been mailed to it by the AAA, the locale shall be the one requested. If a party objects to the locale requested by the other party, the AAA shall have the power to determine the locale and its decision shall be final and binding.

Part B—The Hearing

Section 1: Date, Time, and Place of Hearing

The arbitrator shall set the date, time, and place for each hearing. The AAA shall mail to each party notice thereof at least ten days in advance, unless the parties by mutual agreement waive such notice or modify the terms thereof.

Section 2: Representation

Any party may be represented by counsel or other authorized representative. A party intending to be so represented shall notify the other party and the AAA of the name and address of the representative at least three days prior to the date set for the hearing at which that person is first to appear.

When such a representative initiates an arbitration or responds for a party, notice is deemed to have been given.

Section 3: Attendance at Hearings

The arbitrator shall maintain the privacy of the hearings unless the law provides to the contrary. Representatives of the MOD director, and any persons having a direct interest in the arbitration are entitled to attend hearings. The arbitrator shall otherwise have the power to require the exclusion of any witness, other than a party or other essential person, during the testimony of any other witness. It shall be discretionary with the arbitrator to determine the propriety of the attendance of any other person.

Section 4: Oaths

Before proceeding with the first hearing, each arbitrator may take an oath of office and, if required by law, shall do so. The arbitrator may require witnesses to testify under oath administered by any duly qualified person and, if it is required by law or requested by any party, shall do so.

Section 5: Majority Decision

All decisions of the arbitrators must be by a majority. The award must also be made by a majority.

Section 6: Order of Proceedings and Communication with Arbitrator

A hearing shall be opened by the filing of the oath of the arbitrator, where required; by the recording of the date, time, and place of the hearing, and the presence of the arbitrator, the parties and their representatives, if any; and by the receipt by the arbitrator of the statement of the claim and the answering statement, if any.

The arbitrator may, at the beginning of the hearing, ask for statements clarifying the issues involved. In some cases, part or all of the above will have been accomplished at the preliminary hearing conducted by the arbitrator pursuant to Part A Section 9 of these Rules.

The complaining party shall then present evidence to support its claim. The defending party shall then present evidence supporting its defense. Witnesses for each party shall submit to questions or other examination. The arbitrator has the discretion to vary this procedure but shall afford a full and equal opportunity to all parties for the presentation of any material and relevant evidence.

Exhibits, when offered by either party, may be received in evidence by the arbitrator.

The names and addresses of all witnesses and a description of the exhibits in the order received shall be made a part of the record.

There shall be no direct communication between the parties and an arbitrator other than at oral hearing, unless the parties and the arbitrator agree otherwise. Any other oral or written communication from the parties to the neutral arbitrator shall be directed to the AAA for transmittal to the arbitrator.

Section 7: Evidence

The parties may offer such evidence as is relevant and material to the dispute and shall produce such evidence as the arbitrator may deem necessary to an understanding and determination of the dispute. An arbitrator or other person authorized by law to subpoena witnesses or documents may do so upon the request of any party or independently.

The arbitrator shall be the judge of the relevance and materiality of the evidence offered, and conformity to legal rules of evidence shall not be necessary. All evidence shall be taken in the presence of all of the arbitrators and all of the parties, except where any of the parties is absent, in default, or has waived the right to be present.

Section 8: Evidence by Affidavit and Posthearing Filing of Documents or Other Evidence

The arbitrator may receive and consider the evidence of witnesses by affidavit, but shall give it only such weight as the arbitrator deems it entitled to after consideration of any objection made to its admission.

If the parties agree or the arbitrator directs that documents or other evidence be submitted to the arbitrator after the hearing, the documents or other evidence shall be filed with the AAA for transmission to the arbitrator. All parties shall be afforded an opportunity to examine such documents or other evidence.

Section 9: Closing of Hearing

The arbitrator shall specifically inquire of all parties whether they have any further proofs to offer or witnesses to be heard. Upon receiving negative replies or if satisfied that the record is complete, the arbitrator shall declare the hearing closed and a minute thereof shall be recorded. If briefs are to be filed, the hearing shall be declared closed as of the final date set by the arbitrator for the receipt of briefs. If documents are to be filed as provided for in Part B Section 9 and the date set for their receipt is later than that set for the receipt of briefs, the later date shall be the date of closing the hearing. The time limit within which the arbitrator is required to make the award shall commence to run, in the absence of other agreements by the parties, upon the closing of the hearing.

Section 10: Reopening of Hearing

The hearing may be reopened on the arbitrator's initiative, or upon application of a party, at any time before the award is made. The arbitrator may reopen the hearing and shall have 30 days from the closing of the reopened hearing within which to make an award.

Section 11: Waiver of Oral Hearing

The parties may provide, by written agreement, for the waiver of oral hearings.

Section 12: Waiver of Rules

Any party who proceeds with the arbitration after knowledge that any provision or requirement of these rules has not been complied with and who fails to state an objection thereto in writing, shall be deemed to have waived the right to object.

Section 13: Extensions of Time

The parties may modify any period of time by mutual agreement. The AAA or the arbitrator may for good cause extend any period of time established by these rules, except the time for making the award. The AAA shall notify the parties of any extension.

Section 14: Serving of Notice

Each party shall be deemed to have consented that any papers, notices, or process necessary or proper for the initiation or continuation of an arbitration under these rules; for any court action in connection therewith; or for the entry of judgment on any award made under these rules may be served on a party by mail addressed to the party or its representative at the last known address or by personal service, inside or outside the state where the arbitration is to be held, provided that reasonable opportunity to be heard with regard thereto has been granted to the party.

The AAA and the parties may also use facsimile transmission, telex, telegram, or other written forms of electronic communication to give the notices required by these rules.

Part C—Award and Decision

Section 1: Time of Award

The award shall be made promptly by the arbitrator and, unless otherwise agreed by the parties or specified by law, no later than 30 days from the date of closing the hearing, or, if oral hearings have been waived, from the date of the AAA's transmittal of the final statements and proofs to the arbitrator.

Section 2: Form of Award

The award shall be in writing and shall be signed by the arbitrator, or if a panel is utilized, a majority of the arbitrators. It shall be accompanied by a written decision which sets forth the reasons for the award. Both the award and the decision shall be filed by the arbitrator with the MOD Director.

Section 3: Scope of Award

The arbitrator may grant to the vehicle manufacturer any repair expenses that he or she deems to be just and equitable.

Section 4: Award upon Settlement

If the parties settle their dispute during the course of the arbitration, the arbitrator may set forth the terms of the agreed settlement in an award. Such an award is referred to as a consent award. The consent award shall be filed by the arbitrator with the MOD Director.

Section 5: Delivery of Award to Parties

Parties shall accept as legal delivery of the award, the placing of the award, or a true copy thereof in the mail addressed to a party or its representative at the last known address, personal service of the award, or the filing of the award in any other manner that is permitted by law.

Section 6: Release of Documents for Judicial Proceedings

The AAA shall, upon the written request of a party, furnish to the party, at its expense, certified copies of any papers in the AAA's possession that may be required in judicial proceedings relating to the arbitration.

Part D—Fees and Expenses

Section 1: Administrative Fee

The AAA shall be compensated for the cost of providing administrative services according to the AAA Administrative Fee Schedule and the AAA Refund Schedule. The Schedules in effect at the time the demand for arbitration or submission agreement is received shall be applicable.

The administrative fee shall be advanced by the initiating party or parties, subject to final allocation at the end of the case.

When a claim or counterclaim is withdrawn or settled, the refund shall be made in accordance with the Refund Schedule. The AAA may, in the event of extreme hardship on the part of any party, defer or reduce the administrative fee.

Section 2: Expenses

The loser of the arbitration is liable for all arbitration expenses unless determined otherwise by the arbitrator.

Section 3: Arbitrator's Fee

An arrangement for the compensation of an arbitrator shall be made through discussions by the parties with the AAA and not directly between the parties and the arbitrator. The terms of compensation of arbitrators on a panel shall be identical.

Section 4: Deposits

The AAA may require the parties to deposit in advance of any hearings such sums of money as it deems necessary to defray the expense of the arbitration, including the arbitrator's fee, if any, and shall render an accounting to the parties and return any unexpended balance at the conclusion of the case.

Part E—Expedited Procedures

Section 1: Notice by Telephone

The parties shall accept all notices from the AAA by telephone. Such notices by the AAA shall subsequently be confirmed in writing to the parties. Should there be a failure to confirm in writing any notice hereunder, the proceeding shall nonetheless be valid if notice has, in fact, been given by telephone.

Section 2: Appointment and Qualifications of Arbitrator

The AAA shall submit simultaneously to each party an identical list of five proposed arbitrators drawn from the National Panel of Commercial Arbitrators, from which one arbitrator shall be appointed.

Each party may strike two names from the list on a preemptory basis. The list is returnable to the AAA within seven days from the date of the AAA's mailing of the list to the parties.

If for any reason the appointment of an arbitrator cannot be made from the list, the AAA may make the appointment from among other members of the panel without the submission of additional lists.

The parties will be given notice by the AAA by telephone of the appointment of the arbitrator, who shall be subject to disqualification for the reasons specified in Part A, Section 6. The parties shall notify the AAA, by telephone, within seven days of any objection to the arbitrator appointed. Any objection by a party to the arbitrator shall be confirmed in writing to the AAA with a copy to the other party or parties.

Section 3: Date, Time, and Place of Hearing

The arbitrator shall set the date, time, and place of the hearing. The AAA will notify the parties by telephone, at least seven days in advance of the hearing date. Formal Notice of Hearing will be sent by the AAA to the parties and the MOD Director.

Section 4: The Hearing

Generally, the hearing shall be completed within one day, unless the dispute is resolved by the submission of documents. The arbitrator, for good cause shown, may schedule an additional hearing to be held within seven days.

Section 5: Time of Award

Unless otherwise agreed by the parties, the award shall be rendered not later than 14 days from the date of the closing of the hearing.

Section 6: Applicability of Rules

Unless explicitly contradicted by the provisions of this part, provisions of other parts of the Rules apply to proceedings conducted under this part.

[54 FR 32593, Aug. 8, 1989, as amended at 70 FR 40432, July 13, 2005]

Subpart W—Emission Control System Performance Warranty Short Tests

SOURCE: 79 FR 23684, Apr. 28, 2014, unless otherwise noted.

§ 85.2201 Applicability.

(a) This subpart describes the test provisions to be employed in conjunction with the Emissions Performance Warranty in subpart V of this part. These provisions generally rely on a vehicle's onboard diagnostic system (OBD) to indicate whether a vehicle passes or fails the test.

(b) The provisions of this subpart may be used to establish warranty eligibility for light-duty vehicles, light-duty trucks, and medium-duty passenger vehicles when tested during the useful life as prescribed in subpart V of this part.

§ 85.2207 Onboard diagnostic test standards.

(a) A vehicle shall fail the OBD test if it is a 1996 or newer vehicle and the vehicle connector is missing, has been tampered with, or is otherwise inoperable.

(b) A vehicle shall fail the OBD test if the malfunction indicator light (MIL) is commanded to be illuminated and it is not visually illuminated according to visual inspection.

(c) A vehicle shall fail the OBD test if the MIL is commanded to be illuminated for one or more diagnostic trouble codes (DTCs), as described in 40 CFR 86.1806.

§ 85.2222 Onboard diagnostic test procedures.

The test sequence for the OBD inspection shall consist of the following steps:

(a) The OBD inspection shall be conducted with the key-on/engine running, with the exception of inspecting for MIL illumination as required in paragraph (d)(4) of this section, during which the inspection shall be conducted with the key-on/engine off.

(b) The inspector shall locate the vehicle connector and plug the test system into the connector.

(c) The test system shall send a Mode $01, PID $01 request in accordance with 40 CFR 86.1806 to determine the OBD evaluation status. The test system shall determine what monitors are supported by the OBD system, and perform the readiness evaluation for applicable monitors in accordance with the requirements and specifications in 40 CFR 86.1806.

(1) Coincident with the beginning of mandatory testing, repair, and retesting based upon the OBD test, if the readiness evaluation indicates that any onboard tests are not complete, the customer shall be instructed to return after the vehicle has been run under conditions that allow completion of all applicable onboard tests. If the readiness evaluation again indicates that any onboard test is not complete, the vehicle shall be failed.

(2) An exception to paragraph (c)(1) of this section is allowed for MY 1996 to MY 2000 vehicles, inclusive, with two or fewer unset readiness monitors, and for MY 2001 and newer vehicles with no more than one unset readiness monitor. Vehicles from those model years which would otherwise pass the OBD inspection, but for the unset readiness code in question, may be issued a passing certificate without being required to operate the vehicle in such a way as to activate those particular monitors. Vehicles from those model years with an unset readiness code that also have a DTC stored resulting in an illuminated MIL must be failed, though setting the unset readiness flag in question shall not be a prerequisite for passing the retest.

(d) The test system shall evaluate the MIL status bit and record status information in the vehicle test record.

(1) If the MIL status bit indicates that the MIL has been commanded to be illuminated, the test system shall send a Mode $03 request in accordance with 40 CFR 86.1806 to determine the stored DTCs. The system shall repeat this cycle until the number of codes reported equals the number expected based on the Mode $01 response. All DTCs resulting in MIL illumination shall be recorded in the vehicle test record and the vehicle shall fail the OBD inspection.

(2) If the MIL bit is not commanded to be illuminated the vehicle shall pass the OBD inspection, even if DTCs are present.

(3) If the MIL bit is commanded to be illuminated, the inspector shall visually inspect the MIL to determine if it is illuminated. If the MIL is commanded to be illuminated but is not, the vehicle shall fail the OBD inspection.

(4) If the MIL does not illuminate at all when the vehicle is in the key-on/engine-off condition, the vehicle shall fail the OBD inspection, even if no DTCs are present and the MIL has not been commanded on.

§ 85.2223 Onboard diagnostic test report.

(a) Motorists whose vehicles fail the OBD test described in § 85.2222 shall be provided with the OBD test results, including the codes retrieved, the name of the component or system associated with each DTC, the status of the MIL illumination command, and the customer alert statement as stated in paragraph (b) of this section.

(b) In addition to any codes that were retrieved, the test report shall include the following language:

Your vehicle's computerized self-diagnostic system (OBD) registered the faults listed below. The faults are probably an indication of a malfunction of an emission component. However, multiple and/or seemingly unrelated faults

may be an indication of an emission-related problem that occurred previously, but upon further evaluation by the OBD system was determined to be only temporary. Therefore, proper diagnosis by a qualified technician is required to positively identify the source of any emission-related problem.

§ 85.2231 Onboard diagnostic test equipment requirements.

(a) The test system interface to the vehicle shall include a plug that conforms to the requirements and specifications of 40 CFR 86.1806.

(b) The test system shall be capable of communicating with the standard data link connector of vehicles with certified OBD systems.

(c) The test system shall be capable of checking for OBD monitors and the evaluation status of supported monitors (test complete/test not complete) in Mode $01 PID $01, as well as be able to request the DTCs, consistent with the requirements and specifications of 40 CFR 86.1806.

Subpart X—Determination of Model Year for Motor Vehicles and Engines Used in Motor Vehicles Under Section 177 and Part A of Title II of the Clean Air Act

SOURCE: 60 FR 4738, Jan. 24, 1995, unless otherwise noted.

§ 85.2301 Applicability.

The definitions provided by this subpart are effective February 23, 1995 and apply to all light-duty motor vehicles and trucks, heavy-duty motor vehicles and heavy-duty engines used in motor vehicles, and on-highway motorcycles as such vehicles and engines are regulated under section 177 and Title II part A of the Clean Air Act.

§ 85.2302 Definition of model year.

Model year means the manufacturer's annual production period (as determined under § 85.2304) which includes January 1 of such calendar year, provided, that if the manufacturer has no annual production period, the term ''model year'' shall mean the calendar year.

§ 85.2303 Duration of model year.

A specific model year must always include January 1 of the calendar year for which it is designated and may not include a January 1 of any other calendar year. Thus, the maximum duration of a model year is one calendar year plus 364 days.

§ 85.2304 Definition of production period.

(a) The ''annual production period'' for all models within an engine family of light-duty motor vehicles, heavy-duty motor vehicles and engines, and on-highway motorcycles begins either: when any vehicle or engine within the engine family is first produced; or on January 2 of the calendar year preceding the year for which the model year is designated, whichever date is later. The annual production period ends either: When the last such vehicle or engine is produced; or on December 31 of the calendar year for which the model year is named, whichever date is sooner.

(b) The date when a vehicle or engine is first produced is the ''Job 1 date,'' which is defined as that calendar date on which a manufacturer completes all manufacturing and assembling processes necessary to produce the first saleable unit of the designated model which is in all material respects the same as the vehicle or engine described in the manufacturer's application for certification. The ''Job 1 date'' may be a date earlier in time than the date on which the certificate of conformity is issued.

§ 85.2305 Duration and applicability of certificates of conformity.

(a) Except as provided in paragraph (b) of this section, a certificate of conformity is deemed to be effective and cover the vehicles or engines named in such certificate and produced during the annual production period, as defined in § 85.2304.

(b) Section 203 of the Clean Air Act prohibits the sale, offering for sale, delivery for introduction into commerce, and introduction into commerce, of any new vehicle or engine not covered by a certificate of conformity unless it is an imported vehicle exempted by the Administrator or otherwise authorized

jointly by EPA and U.S. Customs Service regulations. However, the Act does not prohibit the production of vehicles or engines without a certificate of conformity. Vehicles or engines produced prior to the effective date of a certificate of conformity, as defined in paragraph (a) of this section, may also be covered by the certificate if the following conditions are met:

(1) The vehicles or engines conform in all material respects to the vehicles or engines described in the application for the certificate of conformity:

(2) The vehicles or engines are not sold, offered for sale, introduced into commerce, or delivered for introduction into commerce prior to the effective date of the certificate of conformity;

(3) The Agency is notified prior to the beginning of production when such production will start, and the Agency is provided full opportunity to inspect and/or test the vehicles during and after their production; for example, the Agency must have the opportunity to conduct selective enforcement auditing production line testing as if the vehicles had been produced after the effective date of the certificate.

(c) New vehicles or engines imported by an original equipment manufacturer after December 31 of the calendar year for which the model year was named are still covered by the certificate of conformity as long as the production of the vehicle or engine was completed before December 31 of that year. This paragraph does not apply to vehicles that may be covered by certificates held by independent commercial importers unless specifically approved by EPA.

(d) Vehicles or engines produced after December 31 of the calendar year for which the model year is named are not covered by the certificate of conformity for that model year. A new certificate of conformity demonstrating compliance with currently applicable standards must be obtained for these vehicles or engines even if they are identical to vehicles or engines built before December 31.

(e) The extended coverage period described here for a certificate of conformity (i.e., up to one year plus 364 days) is primarily intended to allow flexibility in the introduction of new models. Under no circumstances should it be interpreted that existing models may ''skip'' yearly certification by pulling ahead the production of every other model year.

Subpart Y—Fees for the Motor Vehicle and Engine Compliance Program

§ 85.2401 Assessment of fees.

See 40 CFR part 1027 for the applicable fees associated with certifying engines, vehicles, and equipment under this chapter.

[73 FR 59178, Oct. 8, 2008]

APPENDIXES I–VII TO PART 85
[RESERVED]

APPENDIX VIII TO PART 85—VEHICLE AND ENGINE PARAMETERS AND SPECIFICATIONS

A. LIGHT DUTY VEHICLE PARAMETERS AND SPECIFICATIONS

I. Basic Engine Parameters-Reciprocating Engines.
1. Compression ratio.
2. Cranking compression pressure.
3. Valves (intake and exhaust).
a. Head diameter dimension.
b. Valve lifter or actuator type and valve lash dimension.
4. Camshaft timing.
a. Valve opening (degrees BTDC).
b. Valve closing (degrees ATDC).
c. Valve overlap (inch-degrees).
II. Basic Engine Parameters—Rotary Engines.
1. Intake port(s).
a. Timing and overlap if exposed to the combustion chamber.
2. Exhaust port(s).
a. Timing and overlap if exposed to the combustion chamber.
3. Cranking compression pressure.
4. Compression ratio.
III. Air Inlet System.
1. Temperature control system calibration.
IV. Fuel System.
1. General.
a. Engine idle speed.
b. Engine idle mixture.
2. Carburetion.
a. Air-fuel flow calibration.
b. Transient enrichment system calibration.
c. Starting enrichment system calibration.
d. Altitude compensation system calibration.

e. Hot idle compensation system calibration.
3. Fuel injection.
a. Control parameters and calibration.
b. Fuel shutoff system calibration.
c. Starting enrichment system calibration.
d. Transient enrichment system calibration.
e. Air-fuel flow calibration.
f. Altitude compensation system calibration.
g. Operating pressure(s).
h. Injector timing calibrations.
V. Injection System.
1. Control parameters and calibration.
2. Initial timing setting.
3. Dwell setting.
4. Altitude compensation system calibration.
5. Spark plug voltage.
VI. Engine Cooling System.
1. Thermostat calibration.
VII. Exhaust Emission Control System.
1. Air injection system.
a. Control parameters and calibrations.
b. Pump flow rate.
2. EGR system.
a. Control parameters and calibrations.
b. EGR valve flow calibration.
3. Catalytic converter system.
a. Active surface area.
b. Volume of catalyst.
c. Conversion efficiency.
4. Backpressure.
VIII. Evaporative Emission Control System.
1. Control parameters and calibrations.
2. Fuel tank.
a. Pressure and vacuum relief settings.
IX. Crankcase Emission Control System.
1. Control parameters and calibrations.
2. Valve calibration.
X. Auxiliary Emission Control Devices (AECD).
1. Control parameters and calibrations.
2. Component calibration(s).
XI. Emission Control Related Warning Systems.
1. Control parameters and calibrations.
2. Component calibrations.
XII. Driveline Parameters.
1. Axle ratio(s).

B. HEAVY DUTY GASOLINE ENGINE PARAMETERS AND SPECIFICATIONS

I. Basic Engine Parameters.
1. Compression ratio.
2. Cranking compression pressure.
3. Supercharger/turbocharger calibration.
4. Valves (intake and exhaust).
a. Head diameter dimension.
b. Valve lifter or actuator type and valve lash dimension.
5. Camshaft timing.
a. Valve opening (degrees BTDC).
b. Valve closing (degrees ATDC).
c. Valve overlap (inch-degrees).
II. Air Inlet System.
1. Temperature control system calibration.
III. Fuel System.
1. General.
a. Engine idle speed.
b. Engine idle mixture.
2. Carburetion.
a. Air-fuel flow calibration.
b. Transient enrichment system calibration.
c. Starting enrichment system calibration.
d. Altitude compensation system calibration.
e. Hot idle compensation system calibration.
3. Fuel injection.
a. Control parameters and calibrations.
b. Fuel shutoff system calibration.
c. Starting enrichment system calibration.
d. Transient enrichment system calibration.
e. Air-fuel flow calibration.
f. Altitude compensation system calibration.
g. Operating pressure(s).
h. Injector timing calibration.
IV. Ignition System.
1. Control parameters and calibration.
2. Initial timing setting.
3. Dwell setting.
4. Altitude compensation system calibration.
5. Spark plug voltage.
V. Engine Cooling System.
1. Thermostat calibration.
VI. Exhaust Emission Control System.
1. Air injection system.
a. Control parameters and calibrations.
b. Pump flow rate.
2. EGR system.
a. Control parameters and calibrations.
b. EGR valve flow calibration.
3. Catalytic converter system.
a. Active surface area.
b. Volume of catalyst.
c. Conversion efficiency.
4. Backpressure.
VII. Evaporative Emission Control System.
1. Control parameters and calibrations.
2. Fuel tank.
a. Pressure and vacuum relief settings.
VIII. Crankcase Emission Control System.
1. Control parameters and calibrations.
2. Valve calibrations.
IX. Auxiliary Emission Control Devices (AECD).
1. Control parameters and calibrations.
2. Component calibrations.
X. Emission Control Related Warning Systems.
1. Control parameters and calibrations.
2. Component calibrations.

C. HEAVY DUTY DIESEL ENGINE PARAMETERS AND SPECIFICATIONS

I. Basic Engine Parameters-Four Stroke Cycle Reciprocating Engines.
1. Compression ratio.
2. Cranking compression pressure.
3. Supercharger/turbocharger calibration.
4. Valves (intake and exhaust).
a. Head diameter dimension.
b. Valve lifter or actuator type and valve lash dimension.
5. Camshaft timing.
a. Valve opening (degrees BTDC).
b. Valve closing (degrees ATDC).
c. Valve overlap (inch-degrees).
II. Basic Engine Parameters—Two-Stroke Cycle Reciprocating Engine.
1.–5. Same as Section C.I.
6. Intake port(s).
a. Timing in combustion cycle.
7. Exhaust port(s).
a. Timing in combustion cycle.
III. Air Inlet System.
1. Temperature control system calibration.
2. Maximum allowable air inlet restriction.
IV. Fuel System.
1. Fuel injection.
a. Control parameters and calibrations.
b. Transient enrichment system calibration.
c. Air-fuel flow calibration.
d. Altitude compensation system calibration.
e. Operating pressure(s).
f. Injector timing calibration.
V. Exhaust Emission Control System.
1. Maximum allowable backpressure.
VI. Crankcase Emission Control System.
1. Control parameters and calibrations.
2. Valve calibrations.
VII. Auxiliary Emission Control Devices (AECD).
1. Control parameters and calibrations.
2. Component calibration(s).

[42 FR 28129, June 2, 1977]

PART 86—CONTROL OF EMISSIONS FROM NEW AND IN-USE HIGHWAY VEHICLES AND ENGINES

Sec.
86.1 Incorporation by reference.

Subpart A—General Provisions for Heavy-Duty Engines and Heavy-Duty Vehicles

86.000–2 Definitions.
86.000–3 Abbreviations.
86.000–7 Maintenance of records; submittal of information; right of entry.
86.000–24 Test vehicles and engines.
86.001–2 Definitions.
86.001–21 Application for certification.
86.001–23 Required data.
86.001–24 Test vehicles and engines.
86.004–2 Definitions.
86.004–11 Emission standards for 2004 and later model year diesel heavy-duty engines and vehicles.
86.004–15 NO_X plus NMHC and particulate averaging, trading, and banking for heavy-duty engines.
86.004–16 Prohibition of defeat devices.
86.004–21 Application for certification.
86.004–25 Maintenance.
86.004–26 Mileage and service accumulation; emission measurements.
86.004–28 Compliance with emission standards.
86.004–38 Maintenance instructions.
86.004–40 Heavy-duty engine rebuilding practices.
86.005–1 General applicability.
86.005–10 Emission standards for 2005 and later model year Otto-cycle heavy-duty engines and vehicles.
86.007–11 Emission standards and supplemental requirements for 2007 and later model year diesel heavy-duty engines and vehicles.
86.007–15 NO_X and particulate averaging, trading, and banking for heavy-duty engines.
86.007–17 On-board Diagnostics for engines used in applications less than or equal to 14,000 pounds GVWR.
86.007–21 Application for certification.
86.007–23 Required data.
86.007–30 Certification.
86.008–10 Emission standards for 2008 and later model year Otto-cycle heavy-duty engines and vehicles.
86.010–2 Definitions.
86.010–18 On-board Diagnostics for engines used in applications greater than 14,000 pounds GVWR.
86.010–38 Maintenance instructions.
86.012–2 Definitions.
86.016–1 General applicability.
86.078–3 Abbreviations.
86.078–6 Hearings on certification.
86.079–31 Separate certification.
86.079–32 Addition of a vehicle or engine after certification.
86.079–33 Changes to a vehicle or engine covered by certification.
86.079–39 Submission of maintenance instructions.
86.080–12 Alternative certification procedures.
86.082–2 Definitions.
86.082–34 Alternative procedure for notification of additions and changes.
86.084–2 Definitions.
86.084–4 Section numbering; construction.
86.085–2 Definitions.
86.085–20 Incomplete vehicles, classification.
86.085–37 Production vehicles and engines.
86.088–2 Definitions.
86.090–2 Definitions.
86.090–3 Abbreviations.

86.090–5 General standards; increase in emissions; unsafe conditions.
86.090–27 Special test procedures.
86.091–2 Definitions.
86.091–7 Maintenance of records; submittal of information; right of entry.
86.091–29 Testing by the Administrator.
86.092–2 Definitions.
86.093–2 Definitions.
86.094–2 Definitions.
86.094–3 Abbreviations.
86.094–7 Maintenance of records; submittal of information; right of entry.
86.094–14 Small-volume manufacturers certification procedures.
86.094–21 Application for certification.
86.094–22 Approval of application for certification; test fleet selections; determinations of parameters subject to adjustment for certification and Selective Enforcement Audit, adequacy of limits, and physically adjustable ranges.
86.094–25 Maintenance.
86.095–35 Labeling.
86.096–2 Definitions.
86.096–3 Abbreviations.
86.096–24 Test vehicles and engines.
86.098–2 Definitions.
86.098–3 Abbreviations.
86.098–10 Emission standards for 1998 and later model year Otto-cycle heavy-duty engines and vehicles.
86.098–23 Required data.
86.099–10 Emission standards for 1999 and later model year Otto-cycle heavy-duty engines and vehicles.
86.099–11 Emission standards for 1999 and later model year diesel heavy-duty engines and vehicles.

Subpart B—Emission Regulations for 1977 and Later Model Year New Light-Duty Vehicles and New Light-Duty Trucks and New Otto-Cycle Complete Heavy-Duty Vehicles; Test Procedures

86.101 General applicability.
86.102 Definitions.
86.103 Abbreviations.
86.104 Section numbering; construction.
86.105 Introduction; structure of subpart.
86.106–96 Equipment required; overview.
86.107–96 Sampling and analytical systems; evaporative emissions.
86.107–98 Sampling and analytical system.
86.108–00 Dynamometer.
86.109–94 Exhaust gas sampling system; Otto-cycle vehicles not requiring particulate emission measurements.
86.110–94 Exhaust gas sampling system; diesel-cycle vehicles, and Otto-cycle vehicles requiring particulate emissions measurements.
86.111–94 Exhaust gas analytical system.
86.112–91 Weighing chamber (or room) and microgram balance specifications.
86.113–04 Fuel specifications.
86.113–15 Fuel specifications.
86.113–94 Fuel specifications.
86.114–94 Analytical gases.
86.115–78 EPA urban dynamometer driving schedule.
86.116–94 Calibrations, frequency and overview.
86.117–96 Evaporative emission enclosure calibrations.
86.118–00 Dynamometer calibrations.
86.119–90 CVS calibration.
86.120–94 Gas meter or flow instrumentation calibration; particulate, methanol and formaldehyde measurement.
86.121–90 Hydrocarbon analyzer calibration.
86.122–78 Carbon monoxide analyzer calibration.
86.123–78 Oxides of nitrogen analyzer calibration.
86.124–78 Carbon dioxide analyzer calibration.
86.125–94 Methane analyzer calibration.
86.126–90 Calibration of other equipment.
86.127–00 Test procedures; overview.
86.127–12 Test procedures; overview.
86.128–79 Transmissions.
86.129–00 Road load power, test weight, and inertia weight class determination.
86.129–80 Road load power, test weight, and inertia weight class determination.
86.129–94 Road load power, test weight, inertia weight class determination, and fuel temperature profile.
86.130–96 Test sequence; general requirements.
86.131–96 Vehicle preparation.
86.132–00 Vehicle preconditioning.
86.133–96 Diurnal emission test.
86.134–96 Running loss test.
86.135–12 Dynamometer procedure.
86.135–90 Dynamometer procedure.
86.136–90 Engine starting and restarting.
86.137–94 Dynamometer test run, gaseous and particulate emissions.
86.138–96 Hot soak test.
86.139–90 Particulate filter handling and weighing.
86.140–94 Exhaust sample analysis.
86.142–90 Records required.
86.143–96 Calculations; evaporative emissions.
86.144–94 Calculations; exhaust emissions.
86.145–82 Calculations; particulate emissions.
86.146–96 Fuel dispensing spitback procedure.
86.150–98 Refueling test procedure; overview.
86.151–98 General requirements; refueling test.
86.152–98 Vehicle preparation; refueling test.
86.153–98 Vehicle and canister preconditioning; refueling test.
86.154–98 Measurement procedure; refueling test.
86.155–98 Records required; refueling test.
86.156–98 Calculations; refueling test.

86.157–98 Refueling test procedures for liquefied petroleum gas-fueled vehicles.
86.158–00 Supplemental Federal Test Procedures; overview.
86.158–08 Supplemental Federal Test Procedures; overview.
86.159–00 Exhaust emission test procedures for US06 emissions.
86.159–08 Exhaust emission test procedures for US06 emissions.
86.160–00 Exhaust emission test procedure for SC03 emissions.
86.161–00 Air conditioning environmental test facility ambient requirements.
86.162–03 Approval of alternative air conditioning test simulations.
86.163–00 Spot check correlation procedures for vehicles tested using a simulation of the environmental test cell for air conditioning emission testing.
86.164–00 Supplemental Federal Test Procedure calculations.
86.164–08 Supplemental Federal Test Procedure calculations.
86.165–12 Air conditioning idle test procedure.
86.166–12 [Reserved]

Subpart C—Emission Regulations for 1994 and Later Model Year Gasoline-Fueled New Light-Duty Vehicles, New Light-Duty Trucks and New Medium-Duty Passenger Vehicles; Cold Temperature Test Procedures

86.201 General applicability.
86.213 Fuel specifications.

Subpart D [Reserved]

Subpart E—Emission Regulations for 1978 and Later New Motorcycles, General Provisions

86.401–97 General applicability.
86.401–2006 General applicability.
86.402–78 Definitions.
86.402–98 Definitions.
86.403–78 Abbreviations.
86.404–78 Section numbering.
86.405–78 Measurement system.
86.406–78 Introduction, structure of subpart, further information.
86.407–78 Certificate of conformity required.
86.408–78 General standards; increase in emissions; unsafe conditions.
86.409–78 Defeat devices, prohibition.
86.410–90 Emission standards for 1990 and later model year motorcycles.
86.410–2006 Emission standards for 2006 and later model year motorcycles.
86.411–78 Maintenance instructions, vehicle purchaser.
86.412–78 Maintenance instructions, submission to Administrator.
86.413–78 Labeling.
86.413–2006 Labeling.
86.414–78 Submission of vehicle identification number.
86.415–78 Production vehicles.
86.416–80 Application for certification.
86.417–78 Approval of application for certification.
86.418–78 Test fleet selection.
86.419–2006 Engine displacement, motorcycle classes.
86.420–78 Engine families.
86.421–78 Test fleet.
86.422–78 Administrator's fleet.
86.423–78 Test vehicles.
86.425–78 Test procedures.
86.426–78 Service accumulation.
86.427–78 Emission tests.
86.428–80 Maintenance, scheduled; test vehicles.
86.429–78 Maintenance, unscheduled; test vehicles.
86.430–78 Vehicle failure.
86.431–78 Data submission.
86.432–78 Deterioration factor.
86.434–78 Testing by the Administrator.
86.435–78 Extrapolated emission values.
86.436–78 Additional service accumulation.
86.437–78 Certification.
86.438–78 Amendments to the application.
86.439–78 Alternative procedure for notification of additions and changes.
86.440–78 Maintenance of records.
86.441–78 Right of entry.
86.442–78 Denial, revocation, or suspension of certification.
86.443–78 Request for hearing.
86.444–78 Hearings on certification.
86.445–2006 What temporary provisions address hardship due to unusual circumstances?
86.446–2006 What are the provisions for extending compliance deadlines for small-volume manufacturers under hardship?
86.447–2006 What provisions apply to motorcycle engines below 50 cc that are certified under the Small SI program or the Recreational-vehicle program?
86.448–2006 What provisions apply to vehicles certified under the Recreational-vehicle program?
86.449 Averaging provisions.

Subpart F—Emission Regulations for 1978 and Later New Motorcycles, Test Procedures

86.501–78 Applicability.
86.502–78 Definitions.
86.503–78 Abbreviations.
86.504–78 Section numbering.
86.505–2004 Introduction; structure of subpart.
86.508–78 Dynamometer.
86.509–90 Exhaust gas sampling system.
86.511–90 Exhaust gas analytical system.
86.513 Fuel and engine lubricant specifications.

86.514–78 Analytical gases.
86.515–78 EPA urban dynamometer driving schedule.
86.516–90 Calibrations, frequency and overview.
86.518–78 Dynamometer calibration.
86.519–90 Constant volume sampler calibration.
86.521–90 Hydrocarbon analyzer calibration.
86.522–78 Carbon monoxide analyzer calibration.
86.523–78 Oxides of nitrogen analyzer calibration.
86.524–78 Carbon dioxide analyzer calibration.
86.526–90 Calibration of other equipment.
86.527–90 Test procedures, overview.
86.528–78 Transmissions.
86.529–98 Road load force and inertia weight determination.
86.530–78 Test sequence, general requirements.
86.531–78 Vehicle preparation.
86.532–78 Vehicle preconditioning.
86.535–90 Dynamometer procedure.
86.536–78 Engine starting and restarting.
86.537–90 Dynamometer test runs.
86.540–90 Exhaust sample analysis.
86.542–90 Records required.
86.544–90 Calculations; exhaust emissions.
86.545–86.599 [Reserved]

Subpart G—Selective Enforcement Auditing of New Light-Duty Vehicles, Light-Duty Trucks, and Heavy-Duty Vehicles

86.601–1—86.601–83 [Reserved]
86.601–84 Applicability.
86.602–84 Definitions.
86.602–98 Definitions.
86.603–88 Test orders.
86.603–98 Test orders.
86.604–84 Testing by the Administrator.
86.605–88 Maintenance of records; submittal of information.
86.605–98 Maintenance of records; submittal of information.
86.606–84 Entry and access.
86.607–84 Sample selection.
86.608–98 Test procedures.
86.609–98 Calculation and reporting of test results.
86.610–98 Compliance with acceptable quality level and passing and failing criteria for Selective Enforcement Audits.
86.612–97 Suspension and revocation of certificates of conformity.
86.614–84 Hearings on suspension, revocation, and voiding of certificates of conformity.
86.615–84 Treatment of confidential information.

Subpart H [Reserved]

Subpart I—Emission Regulations for New Diesel Heavy-Duty Engines; Smoke Exhaust Test Procedure

86.884–1 General applicability.
86.884–2 Definitions.
86.884–3 Abbreviations.
86.884–4 Section numbering.
86.884–5 Test procedures.
86.884–6 Fuel specifications.
86.884–7 Dynamometer operation cycle for smoke emission tests.
86.884–8 Dynamometer and engine equipment.
86.884–9 Smoke measurement system.
86.884–10 Information.
86.884–11 Instrument checks.
86.884–12 Test run.
86.884–13 Data analysis.
86.884–14 Calculations.

Subpart J—Fees for the Motor Vehicle and Engine Compliance Program

86.901 Assessment of fees.

Subpart K—Selective Enforcement Auditing of New Heavy-Duty Engines

86.1001 Applicability.

Subpart L—Nonconformance Penalties for Gasoline-Fueled and Diesel Heavy-Duty Engines and Heavy-Duty Vehicles, Including Light-Duty Trucks

86.1101–87 Applicability.
86.1102–87 Definitions.
86.1103–2016 Criteria for availability of nonconformance penalties.
86.1104–2016 Determination of upper limits.
86.1105–87 Emission standards for which nonconformance penalties are available.
86.1106–87 Production compliance auditing.
86.1107–87 Testing by the Administrator.
86.1108–87 Maintenance of records.
86.1109–87 Entry and access.
86.1110–87 Sample selection.
86.1111–87 Test procedures for PCA testing.
86.1112–87 Determining the compliance level and reporting of test results.
86.1113–87 Calculation and payment of penalty.
86.1114–87 Suspension and voiding of certificates of conformity.
86.1115–87 Hearing procedures for nonconformance determinations and penalties.
86.1116–87 Treatment of confidential information.

Subpart M [Reserved]

Subpart N—Exhaust Test Procedures for Heavy-duty Engines

86.1301 Scope; applicability.
86.1302–84 Definitions.
86.1303–84 Abbreviations.
86.1304 Section numbering; construction.
86.1305 Introduction; structure of subpart.
86.1333 Transient test cycle generation.
86.1360 Supplemental emission test; test cycle and procedures.
86.1362 Steady-state testing with a ramped-modal cycle.
86.1370 Not-To-Exceed test procedures.
86.1372 Measuring smoke emissions within the NTE zone.

Subpart O [Reserved]

Subpart P—Emission Regulations for Otto-Cycle Heavy-Duty Engines, New Methanol-Fueled Natural Gas-Fueled, and Liquefied Petroleum Gas-Fueled Diesel-Cycle Heavy-Duty Engines, New Otto-Cycle Light-Duty Trucks, and New Methanol-Fueled Natural Gas-Fueled, and Liquefied Petroleum Gas-Fueled Diesel-Cycle Light-Duty Trucks; Idle Test Procedures

86.1501 Scope; applicability.
86.1502 Definitions.
86.1503 Abbreviations.
86.1505 Introduction; structure of subpart.
86.1506 Equipment required and specifications; overview.
86.1509 Exhaust gas sampling system.
86.1511 Exhaust gas analysis system.
86.1513 Fuel specifications.
86.1514 Analytical gases.
86.1516 Calibration; frequency and overview.
86.1519 CVS calibration.
86.1522 Carbon monoxide analyzer calibration.
86.1524 Carbon dioxide analyzer calibration.
86.1526 Calibration of other equipment.
86.1527 Idle test procedure; overview.
86.1530 Test sequence; general requirements.
86.1537 Idle test run.
86.1540 Idle exhaust sample analysis.
86.1542 Information required.
86.1544 Calculation; idle exhaust emissions.

Subpart Q—Regulations for Altitude Performance Adjustments for New and In-Use Motor Vehicles and Engines

86.1601 General applicability.
86.1602 Definitions.
86.1603 General requirements.
86.1604 Conditions for disapproval.
86.1605 Information to be submitted.
86.1606 Labeling.

Subpart R [Reserved]

Subpart S—General Compliance Provisions for Control of Air Pollution From New and In-Use Light-Duty Vehicles, Light-Duty Trucks, and Heavy-Duty Vehicles

86.1801–01 Applicability.
86.1801–12 Applicability.
86.1802–01 Section numbering; construction.
86.1803–01 Definitions.
86.1804–01 Acronyms and abbreviations.
86.1805–04 Useful life.
86.1805–12 Useful life.
86.1805–17 Useful life.
86.1806–05 Onboard diagnostics.
86.1806–17 Onboard diagnostics.
86.1807–01 Vehicle labeling.
86.1808–01 Maintenance instructions.
86.1809–01 Prohibition of defeat devices.
86.1809–10 Prohibition of defeat devices.
86.1809–12 Prohibition of defeat devices.
86.1810–01 General standards; increase in emissions; unsafe conditions; waivers
86.1810–09 General standards; increase in emissions; unsafe condition; waivers.
86.1810–17 General requirements.
86.1811–04 Emission standards for light-duty vehicles, light-duty trucks and medium-duty passenger vehicles.
86.1811–09 Emission standards for light-duty vehicles, light-duty trucks and medium-duty passenger vehicles.
86.1811–10 Emission standards for light-duty vehicles, light-duty trucks and medium-duty passenger vehicles.
86.1811–17 Exhaust emission standards for light-duty vehicles, light-duty trucks and medium-duty passenger vehicles.
86.1813–17 Evaporative and refueling emission standards.
86.1816–05 Emission standards for complete heavy-duty vehicles.
86.1816–08 Emission standards for complete heavy-duty vehicles.
86.1816–18 Emission standards for heavy-duty vehicles.
86.1817–05 Complete heavy-duty vehicle averaging, trading, and banking program.
86.1817–08 Complete heavy-duty vehicle averaging, trading, and banking program.
86.1818–12 Greenhouse gas emission standards for light-duty vehicles, light-duty trucks, and medium-duty passenger vehicles.
86.1819 [Reserved]
86.1819–14 Greenhouse gas emission standards for heavy-duty vehicles.
86.1820–01 Durability group determination.
86.1821–01 Evaporative/refueling family determination.
86.1822–01 Durability data vehicle selection.
86.1823–01 Durability demonstration procedures for exhaust emissions.

86.1823–08 Durability demonstration procedures for exhaust emissions.
86.1824–01 Durability demonstration procedures for evaporative emissions.
86.1824–07 Durability demonstration procedures for evaporative emissions.
86.1824–08 Durability demonstration procedures for evaporative emissions.
86.1825–01 Durability demonstration procedures for refueling emissions.
86.1825–08 Durability demonstration procedures for refueling emissions.
86.1826–01 Assigned deterioration factors for small-volume manufacturers and small-volume test groups.
86.1827–01 Test group determination.
86.1828–01 Emission data vehicle selection.
86.1829–01 Durability and emission testing. requirements; waivers.
86.1829–15 Durability and emission testing requirements; waivers.
86.1830–01 Acceptance of vehicles for emission testing.
86.1831–01 Mileage accumulation requirements for test vehicles.
86.1832–01 Optional equipment and air conditioning for test vehicles.
86.1833–01 Adjustable parameters.
86.1834–01 Allowable maintenance.
86.1835–01 Confirmatory certification testing.
86.1836–01 Manufacturer-supplied production vehicles for testing.
86.1837–01 Rounding of emission measurements.
86.1838–01 Small-volume manufacturer certification procedures.
86.1839–01 Carryover of certification data.
86.1840–01 Special test procedures.
86.1841–01 Compliance with emission standards for the purpose of certification.
86.1842–01 Addition of a vehicle after certification; and changes to a vehicle covered by certification.
86.1843–01 General information requirements.
86.1844–01 Information requirements: Application for certification and submittal of information upon request.
86.1845–04 Manufacturer in-use verification testing requirements.
86.1846–01 Manufacturer in-use confirmatory testing requirements.
86.1847–01 Manufacturer in-use verification and in-use confirmatory testing; submittal of information and maintenance of records.
86.1848–01 Certification.
86.1848–10 Compliance with emission standards for the purpose of certification
86.1849–01 Right of entry.
86.1850–01 Denial, suspension or revocation of certificate of conformity.
86.1851–01 Application of good engineering judgment to manufacturers' decisions.
86.1852–01 Waivers for good in-use emission performance.
86.1853–01 Certification hearings.
86.1854–12 Prohibited acts.
86.1855–86.1859 [Reserved]
86.1860–04 How to comply with the Tier 2 and interim non-Tier 2 fleet average NO_X standards.
86.1860–17 How to comply with the Tier 3 fleet-average standards.
86.1861–04 How do the Tier 2 and interim non-Tier 2 NO_X averaging, banking and trading programs work?
86.1861–17 How do the NMOG + NO_X and evaporative emission credit programs work?
86.1862–04 Maintenance of records and submittal of information relevant to compliance with fleet-average standards.
86.1863–07 Optional chassis certification for diesel vehicles.
86.1864–10 How to comply with the fleet average cold temperature NMHC standards.
86.1865–12 How to comply with the fleet average CO_2 standards.
86.1866–12 CO_2 credits for advanced technology vehicles.
86.1867–12 CO_2 credits for reducing leakage of air conditioning refrigerant.
86.1868–12 CO_2 credits for improving the efficiency of air conditioning systems.
86.1869–12 CO_2 credits for off-cycle CO_2-reducing technologies.
86.1870–12 CO_2 credits for qualifying full-size light pickup trucks.
86.1871–12 Optional early CO_2 credit programs.
APPENDIX I TO SUBPART S OF PART 86—VEHICLE PROCUREMENT METHODOLOGY
APPENDIX II TO SUBPART S OF PART 86—AS-RECEIVED TESTING VEHICLE REJECTION CRITERIA
APPENDIX III TO SUBPART S OF PART 86—AS-RECEIVED INSPECTION

Subpart T—Manufacturer-Run In-Use Testing Program for Heavy-Duty Diesel Engines

86.1901 What testing requirements apply to my engines that have gone into service?
86.1905 How does this program work?
86.1908 How must I select and screen my in-use engines?
86.1910 How must I prepare and test my in-use engines?
86.1912 How do I determine whether an engine meets the vehicle-pass criteria?
86.1915 What are the requirements for Phase 1 and Phase 2 testing?
86.1917 How does in-use testing under this subpart relate to the emission-related warranty in Section 207(a)(1) of the Clean Air Act?
86.1920 What in-use testing information must I report to EPA?
86.1925 What records must I keep?
86.1930 What special provisions apply from 2005 through 2010?

APPENDIX I TO SUBPART T OF PART 86—SAMPLE GRAPHICAL SUMMARY OF NTE EMISSION RESULTS
86.1931–86.1999 -Reserved]
APPENDIX I TO PART 86—DYNAMOMETER SCHEDULES
APPENDIX II TO PART 86—TEMPERATURE SCHEDULES
APPENDIX III TO PART 86—CONSTANT VOLUME SAMPLER FLOW CALIBRATION
APPENDIX IV TO PART 86—DURABILITY DRIVING SCHEDULES
APPENDIX V TO PART 86—THE STANDARD ROAD CYCLE (SRC)
APPENDIX VI TO PART 86—VEHICLE AND ENGINE COMPONENTS
APPENDIX VII TO PART 86—STANDARD BENCH CYCLE (SBC)
APPENDIX VIII TO PART 86—AGING BENCH EQUIPMENT AND PROCEDURES
APPENDIX IX TO PART 86—EXPERIMENTALLY DETERMINING THE R-FACTOR FOR BENCH AGING DURABILITY PROCEDURES
APPENDIX X TO PART 86—SAMPLING PLANS FOR SELECTIVE ENFORCEMENT AUDITING OF HEAVY-DUTY ENGINES AND LIGHT-DUTY TRUCKS
APPENDIX XI TO PART 86—SAMPLING PLANS FOR SELECTIVE ENFORCEMENT AUDITING OF LIGHT-DUTY VEHICLES
APPENDIX XII TO PART 86—TABLES FOR PRODUCTION COMPLIANCE AUDITING OF HEAVY-DUTY ENGINES AND HEAVY-DUTY VEHICLES, INCLUDING LIGHT-DUTY TRUCKS

AUTHORITY: 42 U.S.C. 7401–7671q.

EDITORIAL NOTE: Nomenclature changes to part 86 appear at 60 FR 34377, June 30, 1995 and 69 FR 18803, Apr. 9, 2004.

§ 86.1 Incorporation by reference.

(a) Certain material is incorporated by reference into this part with the approval of the Director of the Federal Register under 5 U.S.C. 552(a) and 1 CFR part 51. To enforce any edition other than that specified in this section, a document must be published in the FEDERAL REGISTER and the material must be available to the public. All approved material is available for inspection at U.S. EPA, Air and Radiation Docket and Information Center, 1301 Constitution Ave., NW., Room B102, EPA West Building, Washington, DC 20460, (202) 202–1744, and is available from the sources listed below. It is also available for inspection at the National Archives and Records Administration (NARA). For information on the availability of this material at NARA, call 202–741–6030, or go to *http://www.archives.gov/federal_register/code_of_federal_regulations/ibr_locations.html.*

(b) *ASTM International material.* The following standards are available from ASTM International, 100 Barr Harbor Drive, P.O. Box C700, West Conshohocken, PA, 19428–2959, (610) 832–9585, or *http://www.astm.org/:*

(1) ASTM C1549–09, Standard Test Method for Determination of Solar Reflectance Near Ambient Temperature Using a Portable Solar Reflectometer, approved August 1, 2009 (''ASTM C1549''), IBR approved for § 86.1869–12(b).

(2) ASTM D86–12, Standard Test Method for Distillation of Petroleum Products at Atmospheric Pressure, approved December 1, 2012 (''ASTM D86''), IBR approved for §§ 86.113–04(a), 86.113–94(b), 86.213(a), and 86.513(a).

(3) ASTM D93–13, Standard Test Methods for Flash Point by Pensky-Martens Closed Cup Tester, approved July 15, 2013 (''ASTM D93''), IBR approved for § 86.113–94(b).

(4) ASTM D445–12, Standard Test Method for Kinematic Viscosity of Transparent and Opaque Liquids (and Calculation of Dynamic Viscosity), approved April 15, 2012 (''ASTM D445''), IBR approved for § 86.113–94(b).

(5) ASTM D613–13, Standard Test Method for Cetane Number of Diesel Fuel Oil, approved December 1, 2013 (''ASTM D613''), IBR approved for § 86.113–94(b).

(6) ASTM D975–13a, Standard Specification for Diesel Fuel Oils, approved December 1, 2013 (''ASTM D975''), IBR approved for § 86.1910(c).

(7) ASTM D976–06 (Reapproved 2011), Standard Test Method for Calculated Cetane Index of Distillate Fuels, approved October 1, 2011 (''ASTM D976''), IBR approved for § 86.113–94(b).

(8) ASTM D1319–13, Standard Test Method for Hydrocarbon Types in Liquid Petroleum Products by Fluorescent Indicator Adsorption, approved May 1, 2013 (''ASTM D1319''), IBR approved for §§ 86.113–04(a), 86.213(a), and 86.513(a).

(9) ASTM D1945–03 (reapproved 2010), Standard Test Method for Analysis of Natural Gas by Gas Chromatography, approved January 1, 2010 (''ASTM D1945''), IBR approved for §§ 86.113–94(e) and 86.513(d).

(10) ASTM D2163–07, Standard Test Method for Determination of Hydrocarbons in Liquefied Petroleum (LP) Gases and Propane/Propene Mixtures by Gas Chromatography, approved December 1, 2007 (''ASTM D2163''), IBR approved for §§ 86.113–94(f).

(11) ASTM D2622–10, Standard Test Method for Sulfur in Petroleum Products by Wavelength Dispersive X-ray Fluorescence Spectrometry, approved February 15, 2010 (''ASTM D2622''), IBR approved for §§ 86.113–04(a), 86.113–94(b), 86.213(a), and 86.513(a).

(12) ASTM D2699–13b, Standard Test Method for Research Octane Number of Spark-Ignition Engine Fuel, approved October 1, 2013 (''ASTM D2699''), IBR approved for §§ 86.113–04(a) and 86.213(a).

(13) ASTM D2700–13b, Standard Test Method for Motor Octane Number of Spark-Ignition Engine Fuel, approved October 1, 2013 (''ASTM D2700''), IBR approved for §§ 86.113–04(a) and 86.213(a).

(14) ASTM D3231–13, Standard Test Method for Phosphorus in Gasoline, approved June 15, 2013 (''ASTM D3231''), IBR approved for §§ 86.113–04(a), 86.213(a), and 86.513(a).

(15) ASTM D3237–12, Standard Test Method for Lead in Gasoline by Atomic Absorption Spectroscopy, approved June 1, 2012 (''ASTM D3237''), IBR approved for §§ 86.113–04(a), 86.213(a), and 86.513(a).

(16) ASTM D4052–11, Standard Test Method for Density, Relative Density, and API Gravity of Liquids by Digital Density Meter, approved October 15, 2011 (''ASTM D4052''), IBR approved for § 86.113–94(b).

(17) ASTM D5186–03 (Reapproved 2009), Standard Test Method for Determination of the Aromatic Content and Polynuclear Aromatic Content of Diesel Fuels and Aviation Turbine Fuels by Supercritical Fluid Chromatography, approved April 15, 2009 (''ASTM D5186''), IBR approved for § 86.113–94(b).

(18) ASTM D5191–13, Standard Test Method for Vapor Pressure of Petroleum Products (Mini Method), approved December 1, 2013 (''ASTM D5191''), IBR approved for §§ 86.113–04(a), 86.213(a), and 86.513(a).

(19) ASTM E29–93a, Standard Practice for Using Significant Digits in Test Data to Determine Conformance with Specifications, approved March 15, 1993 (''ASTM E29''), IBR approved for §§ 86.004–15(c), 86.007–11(a), 86.007–15(m), 86.1803–01, 86.1823–01(a), 86.1824–01(c), 86.1825–01(c).

(20) ASTM E903–96, Standard Test Method for Solar Absorptance, Reflectance, and Transmittance of Materials Using Integrating Spheres, approved April 10, 1996 (''ASTM E903''), IBR approved for § 86.1869–12(b).

(21) ASTM E1918–06, Standard Test Method for Measuring Solar Reflectance of Horizontal and Low-Sloped Surfaces in the Field, approved August 15, 2006 (''ASTM E1918''), IBR approved for § 86.1869–12(b).

(c) *ANSI material*. The following standards are available from American National Standards Institute, 25 W 43rd Street, 4th Floor, New York, NY 10036, (212) 642–4900, or *http://www.ansi.org:*

(1) ANSI NGV1–2006, Standard for Compressed Natural Gas Vehicle (NGV) Fueling Connection Devices, 2nd edition, reaffirmed and consolidated March 2, 2006, IBR approved for § 86.1813–17(f).

(2) CSA IR–1–15, Compressed Natural Gas Vehicle (NGV) High Flow Fueling Connection Devices—Supplement to NGV 1–2006, ANSI approved August 26, 2015, IBR approved for § 86.1813–17(f),

(d) *California Air Resources Board*. The following documents are available from the California Air Resources Board, 1001 I Street, Sacramento, CA 95812, (916) 322–2884, or *http://www.arb.ca.gov*:

(1) California Requirements Applicable to the LEV III Program, including the following documents:

(i) LEV III exhaust emission standards are in Title 13 Motor Vehicles, Division 3 Air Resources Board, Chapter 1 Motor Vehicle Pollution Control Devices, Article 2 Approval of Motor Vehicle Pollution Control Devices (New Vehicles), § 1961.2 Exhaust Emission Standards and Test Procedures—2015 and Subsequent Model Passenger Cars, Light-Duty Trucks, and Medium-Duty Vehicles, effective as of December 31, 2012, IBR approved for § 86.1803–01.

(ii) LEV III evaporative emission standards for model year 2015 and later vehicles are in Title 13 Motor Vehicles, Division 3 Air Resources Board, Chapter 1 Motor Vehicle Pollution Control Devices, Article 2 Approval of Motor

Vehicle Pollution Control Devices (New Vehicles) § 1976 Standards and Test Procedures for Motor Vehicle Fuel Evaporative Emissions, effective as of December 31, 2012, IBR approved for § 86.1803–01.

(2) California Regulatory Requirements Applicable to the National Low Emission Vehicle Program, October 1996, IBR approved for § 86.113–04(a).

(3) California Regulatory Requirements known as Onboard Diagnostics II (OBD–II), Approved on April 21, 2003, Title 13, California Code of Regulations, Section 1968.2, Malfunction and Diagnostic System Requirements for 2004 and Subsequent Model-Year Passenger Cars, Light-Duty Trucks, and Medium-Duty Vehicles and Engines (OBD–II), IBR approved for § 86.1806–05(j).

(4) California Regulatory Requirements known as Onboard Diagnostics II (OBD–II), Approved on November 9, 2007, Title 13, California Code of Regulations, Section 1968.2, Malfunction and Diagnostic System Requirements for 2004 and Subsequent Model-Year Passenger Cars, Light-Duty Trucks, and Medium-Duty Vehicles and Engines (OBD–II), IBR approved for § 86.1806–05(j).

(5) California Regulatory Requirements known as Onboard Diagnostics II (OBD–II), Title 13, Motor Vehicles, Division 3, Air Resources Board, Chapter 1, Motor Vehicle Pollution Control Devices, Article 2, Approval of Motor Vehicle Pollution Control Devices (New Vehicles), § 1968.2 Malfunction and Diagnostic System Requirements—2004 and Subsequent Model-Year Passenger Cars, Light-Duty Trucks, and Medium-Duty Vehicles and Engines, effective as of July 31, 2013, IBR approved for § 86.1806–17(a).

(e) *ISO material.* The following standards are available from International Organization for Standardization, Case Postale 56, CH–1211 Geneva 20, Switzerland, 41–22–749–01–11, or *http://www.iso.org:*

(1) ISO 13837:2008(E), Road Vehicles—Safety glazing materials—Method for the determination of solar transmittance, First edition, April 15, 2008, IBR approved for § 86.1869–12(b).

(2) ISO 15765–4:2005(E), Road Vehicles—Diagnostics on Controller Area Networks (CAN)—Part 4: Requirements for emissions-related systems, January 15, 2005, IBR approved for §§ 86.010–18(k) and 86.1806–05(h).

(f) *NIST material.* The following documents are available from National Institute of Standards and Technology, 100 Bureau Drive, Gaithersburg, MD 20899, or *http://www.nist.gov:*

(1) NIST Special Publication 811, 2008 Edition, Guide for the Use of the International System of Units (SI), March 2008, IBR approved for § 86.1901(d).

(2) [Reserved]

(g) *SAE International material.* The following standards are available from SAE International, 400 Commonwealth Dr., Warrendale, PA 15096–0001, (877) 606–7323 (U.S. and Canada) or (724) 776–4970 (outside the U.S. and Canada), or *http://www.sae.org:*

(1) SAE J1151, Methane Measurement Using Gas Chromatography, stabilized September 2011, IBR approved for § 86.111–94(b).

(2) SAE J1349, Engine Power Test Code—Spark Ignition and Compression Ignition—As Installed Net Power Rating, revised September 2011, IBR approved for § 86.1803–01.

(3) SAE J1850, Class B Data Communication Network Interface, Revised May 2001, IBR approved for § 86.1806–05(h).

(4) SAE J1877, Recommended Practice for Bar-Coded Vehicle Identification Number Label, July 1994, IBR approved for § 86.1807–01(f).

(5) [Reserved]

(6) SAE J1930, Electrical/Electronic Systems Diagnostic Terms, Definitions, Abbreviations, and Acronyms, Revised May 1998, IBR approved for §§ 86.1808–01(f), 86.1808–07(f).

(7) SAE J1930, Electrical/Electronic Systems Diagnostic Terms, Definitions, Abbreviations, and Acronyms—Equivalent to ISO/TR 15031–2: April 30, 2002, Revised April 2002, IBR approved for §§ 86.010–18(k) and 86.1806–05(h).

(8) SAE J1939, Recommended Practice for a Serial Control and Communications Vehicle Network, Revised October 2007, IBR approved for § 86.010–18(k).

(9) SAE J1939–11, Physical Layer—250K bits/s, Shielded Twisted Pair, Revised October 1999, IBR approved for § 86.1806–05(h).

(10) SAE J1939–13, Off-Board Diagnostic Connector, July 1999, IBR approved for § 86.1806–05(h).

(11) SAE J1939–13, Off-Board Diagnostic Connector, Revised March 2004, IBR approved for § 86.010–18(k).

(12) SAE J1939–21, Data Link Layer, Revised April 2001, IBR approved for § 86.1806–05(h).

(13) SAE J1939–31, Network Layer, Revised December 1997, IBR approved for § 86.1806–05(h).

(14) SAE J1939–71, Vehicle Application Layer (Through February 2007), Revised January 2008, IBR approved for §§ 86.010–38(j) and 86.1806–05(h).

(15) SAE J1939–73, Application Layer—Diagnostics, Revised September 2006, IBR approved for §§ 86.010–18(k), 86.010–38(j), and 86.1806–05(h).

(16) SAE J1939–81, Network Management, Revised May 2003, IBR approved for §§ 86.010–38(j) and 86.1806–05(h).

(17) SAE J1962, Diagnostic Connector Equivalent to ISO/DIS 15031–3; December 14, 2001, Revised April 2002, IBR approved for §§ 86.010–18(k) and 86.1806–05(h).

(18) SAE J1978, OBD II Scan Tool—Equivalent to ISO/DIS 15031–4; December 14, 2001, Revised April 2002, IBR approved for §§ 86.010–18(k) and 86.1806–05(h).

(19) SAE J1979, E/E Diagnostic Test Modes, Revised September 1997, IBR approved for §§ 86.1808–01(f) and 86.1808–07(f).

(20) SAE J1979, (R) E/E Diagnostic Test Modes, Revised May 2007, IBR approved for §§ 86.010–18(k) and 86.1806–05(h).

(21) SAE J2012, (R) Diagnostic Trouble Code Definitions Equivalent to ISO/DIS 15031–6: April 30, 2002, Revised April 2002, IBR approved for §§ 86.010–18(k) and 86.1806–05(h).

(22) SAE J2064 FEB2011, R134a Refrigerant Automotive Air-Conditioned Hose, Revised February 2011, IBR approved for § 86.1867–12(a) and (b).

(23) SAE J2284–3, High Speed CAN (HSC) for Vehicle Applications at 500 KBPS, May 2001, IBR approved for §§ 86.1808–01(f) and 86.1808–07(f).

(24) SAE J2403, Medium/Heavy-Duty E/E Systems Diagnosis Nomenclature—Truck and Bus, Revised August 2007, IBR approved for §§ 86.010–18(k), 86.010–38(j), and 86.1806–05(h).

(25) SAE J2534, Recommended Practice for Pass-Thru Vehicle Programming, February 2002, IBR approved for §§ 86.1808–01(f) and 86.1808–07(f).

(26) SAE J2727 FEB2012, Mobile Air Conditioning System Refrigerant Emission Charts for R–134a and R–1234yf, Revised February 2012, IBR approved for § 86.1867–12(a) and (b).

(27) SAE J2765 OCT2008, Procedure for Measuring System COP [Coefficient of Performance] of a Mobile Air Conditioning System on a Test Bench, issued October 2008, IBR approved for § 86.1868–12(h).

(h) *Truck and Maintenance Council material.* The following documents are available from the Truck and Maintenance Council, 950 North Glebe Road, Suite 210, Arlington, VA 22203–4181, or (703) 838–1754:

(1) TMC RP 1210B, Revised June 2007, WINDOWSTMCOMMUNICATION API, IBR approved for § 86.010–38(j).

(2) [Reserved]

[79 FR 23685, Apr. 28, 2014, as amended at 80 FR 9100, Feb. 19, 2015; 81 FR 73973, Oct. 25, 2016]

Subpart A—General Provisions for Heavy-Duty Engines and Heavy-Duty Vehicles

SOURCE: 42 FR 32907, June 28, 1977, unless otherwise noted.

§ 86.000–2 Definitions.

The definitions of § 86.098–2 continue to apply to 1998 and later model year vehicles. The definitions listed in this section apply beginning with the 2000 model year.

AC1 means a test procedure as described in § 86.162–00 which simulates testing with air conditioning operating in an environmental test cell by adding the air conditioning compressor load to the normal dynamometer forces.

AC2 means a test procedure as described in § 86.162–00 which simulates testing with air conditioning operating in an environmental test cell by adding a heat load to the passenger compartment.

Alternative fuels means any fuel other than gasoline and diesel fuels, such as methanol, ethanol, and gaseous fuels.

866 Cycle means the test cycle that consists of the last 866 seconds (seconds 505 to 1372) of the EPA Urban Dynamometer Driving Schedule, described in § 86.115–00 and listed in appendix I, paragraph (a), of this part.

Environmental test cell means a test cell capable of wind-speed, solar thermal load, ambient temperature, and humidity control or simulation which meets the requirements of § 86.161–00 for running emission tests with the air conditioning operating.

Federal Test Procedure, or FTP means the test procedure as described in § 86.130–00 (a) through (d) and (f) which is designed to measure urban driving tail pipe exhaust emissions and evaporative emissions over the Urban Dynamometer Driving Schedule as described in appendix I to this part.

505 Cycle means the test cycle that consists of the first 505 seconds (seconds 1 to 505) of the EPA Urban Dynamometer Driving Schedule, described in § 86.115–00 and listed in appendix I, paragraph (a), of this part.

SC03 means the test cycle, described in § 86.160–00 and listed in appendix I, paragraph (h), of this part, which is designed to represent driving immediately following startup.

Supplemental FTP, or SFTP means the additional test procedures designed to measure emissions during aggressive and microtransient driving, as described in § 86.159–00 over the US06 cycle, and also the test procedure designed to measure urban driving emissions while the vehicle's air conditioning system is operating, as described in § 86.160–00 over the SC03 cycle.

US06 means the test cycle, described in § 86.159–00 and listed in appendix I, paragraph (g), of this part, which is designed to evaluate emissions during aggressive and microtransient driving.

[61 FR 54878, Oct. 22, 1996]

§ 86.000–3 Abbreviations.

The abbreviations in § 86.098–3 continue to apply to 1998 and later model year vehicles. The abbreviations in this section apply beginning with the 2000 model year:

A/C—Air conditioning
FTP—Federal Test Procedure
SFTP—Supplemental Federal Test Procedure
WOT—Wide Open Throttle

[61 FR 54878, Oct. 22, 1996]

§ 86.000–7 Maintenance of records; submittal of information; right of entry.

Section 86.000–7 includes text that specifies requirements that differ from § 86.091–7 or § 86.094–7. Where a paragraph in § 86.091–7 or § 86.094–7 is identical and applicable to § 86.000–7, this may be indicated by specifying the corresponding paragraph and the statement ''[Reserved]. For guidance see § 86.091–7.'' or ''[Reserved]. For guidance see § 86.094–7.''

(a) introductory text through (a)(2) [Reserved]. For guidance see § 86.091–7.

(a)(3) [Reserved]. For guidance see § 86.094–7.

(b)–(c)(2) [Reserved]. For guidance see § 86.091–7.

(c)(3) [Reserved]. For guidance see § 86.094–7.

(c)(4)–(d)(1)(v) [Reserved]. For guidance see § 86.091–7.

(d)(1)(vi)–(d)(2)(iv) [Reserved]. For guidance see § 86.094–7.

(d)(3)–(g) [Reserved]. For guidance see § 86.091–7.

(h)(1) [Reserved]

(h)(2)–(h)(5) [Reserved]. For guidance see § 86.094–7.

(6) EPA may void ab initio a certificate for a vehicle certified to Tier 1 certification standards or to the respective evaporative and/or refueling test procedure and accompanying evaporative and/or refueling standards as set forth or otherwise referenced in § 86.098–10 for which the manufacturer fails to retain the records required in this section or to provide such information to the Administrator upon request.

[61 FR 54878, Oct. 22, 1996, as amended at 79 FR 23687, Apr. 28, 2014]

§ 86.000–24 Test vehicles and engines.

(a) [Reserved.

(b) introductory text [Reserved]

(b)(1)(i) Vehicles are chosen to be operated and tested for emission data based upon engine family groupings. Within each engine family, one test vehicle is selected. If air conditioning is

projected to be available on any vehicles within the engine family, the Administrator will limit selections to engine codes which have air conditioning available and will require that any vehicle selected under this section has air conditioning installed and operational. The Administrator selects as the test vehicle the vehicle with the heaviest equivalent test weight (including options) within the family which meets the air conditioning eligibility requirement discussed earlier in this section. If more than one vehicle meets this criterion, then within that vehicle grouping, the Administrator selects, in the order listed, the highest road-load power, largest displacement, the transmission with the highest numerical final gear ratio (including overdrive), the highest numerical axle ratio offered in that engine family, and the maximum fuel flow calibration.

(ii) The Administrator selects one additional test vehicle from within each engine family. The additional vehicle selected is the vehicle expected to exhibit the highest emissions of those vehicles remaining in the engine family. The selected vehicle will include an air conditioning engine code unless the Administrator chooses a worst vehicle configuration that is not available with air conditioning. If all vehicles within the engine family are similar, the Administrator may waive the requirements of this paragraph.

(b)(1)(iii)–(b)(1)(vi) [Reserved]

(c)–(f) [Reserved]

(g)(1)–(2) [Reserved]

(g)(3) Except for air conditioning, where it is expected that 33 percent or less of a carline, within an engine-system combination, will be equipped with an item (whether that item is standard equipment or an option) that can reasonably be expected to influence emissions, that item may not be installed on any emission data vehicle or durability data vehicle of that carline within that engine-system combination, unless that item is standard equipment on that vehicle or specifically required by the Administrator.

(4) Air conditioning must be installed and operational on any emission data vehicle of any vehicle configuration that is projected to be available with air conditioning regardless of the rate of installation of air conditioning within the carline. Section 86.096–24(g) (1) and (2) and paragraph (g)(3) of this section will be used to determine whether the weight of the air conditioner will be included in equivalent test weight calculations for emission testing.

[61 FR 54882, Oct. 22, 1996, as amended at 79 FR 23687, Apr. 28, 2014]

§ 86.001–2 Definitions.

The definitions of § 86.000–2 continue to apply to 2000 and later model year vehicles. The definitions listed in this section apply beginning with the 2001 model year.

Useful life means:

(1) For light-duty vehicles, and for light light-duty trucks not subject to the Tier 0 standards of § 86.094–9(a), intermediate useful life and/or full useful life. Intermediate useful life is a period of use of 5 years or 50,000 miles, whichever occurs first. Full useful life is a period of use of 10 years or 100,000 miles, whichever occurs first, except as otherwise noted in § 86.094–9. The useful life of evaporative and/or refueling emission control systems on the portion of these vehicles subject to the evaporative emission test requirements of § 86.130–96, and/or the refueling emission test requirements of § 86.151–2001, is defined as a period of use of 10 years or 100,000 miles, whichever occurs first.

(2) For light light-duty trucks subject to the Tier 0 standards of § 86.094–9(a), and for heavy light-duty truck engine families, intermediate and/or full useful life. Intermediate useful life is a period of use of 5 years or 50,000 miles, whichever occurs first. Full useful life is a period of use of 11 years or 120,000 miles, whichever occurs first. The useful life of evaporative emission and/or refueling control systems on the portion of these vehicles subject to the evaporative emission test requirements of § 86.130–96, and/or the refueling emission test requirements of § 86.151–2001, is also defined as a period of 11 years or 120,000 miles, whichever occurs first.

(3) For an Otto-cycle heavy-duty engine family:

(i) For hydrocarbon and carbon monoxide standards, a period of use of 8 years or 110,000 miles, whichever first occurs.

(ii) For the oxides of nitrogen standard, a period of use of 10 years or 110,000 miles, whichever first occurs.

(iii) For the portion of evaporative emission control systems subject to the evaporative emission test requirements of § 86.1230–96, a period of use of 10 years or 110,000 miles, whichever occurs first.

(4) For a diesel heavy-duty engine family:

(i) For light heavy-duty diesel engines, for hydrocarbon, carbon monoxide, and particulate standards, a period of use of 8 years or 110,000 miles, whichever first occurs.

(ii) For light heavy-duty diesel engines, for the oxides of nitrogen standard, a period of use of 10 years or 110,000 miles, whichever first occurs.

(iii) For medium heavy-duty diesel engines, for hydrocarbon, carbon monoxide, and particulate standards, a period of use of 8 years or 185,000 miles, whichever first occurs.

(iv) For medium heavy-duty diesel engines, for the oxides of nitrogen standard, a period of use of 10 years or 185,000 miles, whichever first occurs.

(v) For heavy heavy-duty diesel engines, for hydrocarbon, carbon monoxide, and particulate standards, a period of use of 8 years or 290,000 miles, whichever first occurs, except as provided in paragraph (4)(vii) of this definition.

(vi) For heavy heavy-duty diesel engines, for the oxides of nitrogen standard, a period of use of 10 years or 290,000 miles, whichever first occurs.

(vii) For heavy heavy-duty diesel engines used in urban buses, for the particulate standard, a period of use of 10 years or 290,000 miles, whichever first occurs.

[59 FR 16281, Apr. 6, 1994, as amended at 61 FR 54886, Oct. 22, 1996]

§ 86.001–21 Application for certification.

Section 86.001–21 includes text that specifies requirements that differ from § 86.094–21 or § 86.096–21. Where a paragraph in § 86.094–21 or § 86.096–21 is identical and applicable to § 86.001–21, this may be indicated by specifying the corresponding paragraph and the statement ''[Reserved]. For guidance see § 86.094–21.'' or ''[Reserved]. For guidance see § 86.096–21.''

(a)–(b)(1)(i)(B) [Reserved]. For guidance see § 86.094–21.

(b)(1)(i)(C) The manufacturer must submit a Statement of Compliance in the application for certification which attests to the fact that they have assured themselves that the engine family is designed to comply with the intermediate temperature cold testing criteria of subpart C of this part, and does not unnecessarily reduce emission control effectiveness of vehicles operating at high altitude or other conditions not experienced within the US06 (aggressive driving) and SC03 (air conditioning) test cycles.

(b)(1)(i)(C)(*1*)–(b)(1)(ii)(C) [Reserved]. For guidance see § 86.094–21.

(b)(2) Projected U.S. sales data sufficient to enable the Administrator to select a test fleet representative of the vehicles (or engines) for which certification is requested, and data sufficient to determine projected compliance with the standards implementation schedules of § 86.000–8 and 86.000–9. Volume projected to be produced for U.S. sale may be used in lieu of projected U.S. sales.

(b)(3) A description of the test equipment and fuel proposed to be used.

(b)(4)(i) For light-duty vehicles and light-duty trucks, a description of the test procedures to be used to establish the evaporative emission and/or refueling emission deterioration factors, as appropriate, required to be determined and supplied in § 86.001–23(b)(2).

(b)(4)(ii)–(b)(5)(iv) [Reserved]. For guidance see § 86.094–21.

(b)(5)(v) For light-duty vehicles and applicable light-duty trucks with non-integrated refueling emission control systems, the number of continuous UDDS cycles, determined from the fuel economy on the UDDS applicable to the test vehicle of that evaporative/refueling emission family-emission control system combination, required to use a volume of fuel equal to 85% of fuel tank volume.

(b)(6)–(b)(8) [Reserved]. For guidance see § 86.094–21.

(b)(9) For each light-duty vehicle, light-duty truck, evaporative/refueling emission family or heavy-duty vehicle

evaporative emission family, a description of any unique procedures required to perform evaporative and/or refueling emission tests, as applicable, (including canister working capacity, canister bed volume, and fuel temperature profile for the running loss test) for all vehicles in that evaporative and/or evaporative/refueling emission family, and a description of the method used to develop those unique procedures.

(10) For each light-duty vehicle or applicable light-duty truck evaporative/refueling emission family, or each heavy-duty vehicle evaporative emission family:

(i) Canister working capacity, according to the procedures specified in § 86.132–96(h)(1)(iv);

(ii) Canister bed volume; and

(iii) Fuel temperature profile for the running loss test, according to the procedures specified in § 86.129–94(d).

(c)–(j) [Reserved]. For guidance see § 86.094–21.

(k) and (l) [Reserved]. For guidance see § 86.096–21.

[61 FR 54886, Oct. 22, 1996]

§ 86.001–23 Required data.

Section 86.001–23 includes text that specifies requirements that differ from § 86.098–23. Where a paragraph in § 86.098–23 is identical and applicable to § 86.001–23, this may be indicated by specifying the corresponding paragraph and the statement ''[Reserved]. For guidance see § 86.098–23.''

(a)–(b)(1) [Reserved]. For guidance see § 86.098–23.

(b)(2) For light-duty vehicles and light-duty trucks, the manufacturer shall submit evaporative emission and/or refueling emission deterioration factors for each evaporative/refueling emission family-emission control system combination and all test data that are derived from testing described under § 86.001–21(b)(4)(i) designed and conducted in accordance with good engineering practice to assure that the vehicles covered by a certificate issued under § 86.001–30 will meet the evaporative and/or refueling emission standards in § 86.099–8 or § 86.001–9, as appropriate, for the useful life of the vehicle.

(b)(3) and (b)(4) [Reserved]. For guidance see § 86.098–23.

(c) *Emission data* (1) [Reserved]

(c)(2)–(e)(1) [Reserved]. For guidance see § 86.098–23.

(e)(2) For evaporative and refueling emissions durability, or light-duty truck or HDE exhaust emissions durability, a statement of compliance with paragraph (b)(2) of this section or § 86.098–23 (b)(1)(ii), (b)(3), or (b)(4) as applicable.

(3) For certification of vehicles with non-integrated refueling systems, a statement that the drivedown used to purge the refueling canister was the same as described in the manufacturer's application for certification. Furthermore, a description of the procedures used to determine the number of equivalent UDDS miles required to purge the refueling canisters, as determined by the provisions of § 86.001–21(b)(5)(v) and subpart B of this part. Furthermore, a written statement to the Administrator that all data, analyses, test procedures, evaluations and other documents, on which the above statement is based, are available to the Administrator upon request.

(f)–(g) [Reserved]

(h)–(m) [Reserved]. For guidance see § 86.098–23.

[61 FR 54887, Oct. 22, 1996, as amended at 62 FR 54720, Oct. 21, 1997; 79 FR 23687, Apr. 28, 2014]

§ 86.001–24 Test vehicles and engines.

Section 86.001–24 includes text that specifies requirements that differ from § 86.096–24, § 86.098–24 or § 86.000–24. Where a paragraph in § 86.096–24, § 86.098–24 or § 86.000–9 is identical and applicable to § 86.001–24, this may be indicated by specifying the corresponding paragraph and the statement ''[Reserved]. For guidance see § 86.096–24.'' or ''[Reserved]. For guidance see § 86.098–24.'' or ''[Reserved]. For guidance see § 86.000–24.''

(a)–(a)(4) [Reserved]. For guidance see § 86.096–24.

(a)(5)–(a)(7) [Reserved]. For guidance see § 86.098–24.

(a)(8)–(b)(1) introductory text [Reserved]. For guidance see § 86.096–24.

(b)(1)(i)–(b)(1)(ii) [Reserved]. For guidance see § 86.000–24.

(b)(1)(iii)–(b)(1)(vi) [Reserved]. For guidance see § 86.096–24.

(b)(1)(vii)(A)–(b)(1)(viii)(A) [Reserved]. For guidance see § 86.098–24.

(b)(1)(viii)(B)–(e)(2) [Reserved]. For guidance see § 86.096–24.

(f) Carryover and carryacross of durability and emission data. In lieu of testing an emission-data or durability vehicle (or engine) selected under § 86.096–24(b)(1) introductory text, (b)(1)(iii)–(b)(1)(vi) and § 86.000–24(b)(1)(i)–(b)(1)(ii) and § 86.098–24(b)(1)(vii)(A)–(b)(1)(viii)(A) or § 86.096–24(c), and submitting data therefor, a manufacturer may, with the prior written approval of the Administrator, submit exhaust emission data, evaporative emission data and/or refueling emission data, as applicable, on a similar vehicle (or engine) for which certification has been obtained or for which all applicable data required under § 86.001–23 has previously been submitted.

(g)(1)–(g)(2) [Reserved]. For guidance see § 86.096–24.

(g)(3)–(g)(4) [Reserved]. For guidance see § 86–000–24.

(h) [Reserved]. For guidance see § 86.096–24.

[61 FR 54887, Oct. 22, 1996]

§ 86.004–2 Definitions.

The definitions of § 86.001–2 continue to apply to 2001 and later model year vehicles. The definitions listed in this section apply beginning with the 2004 model year.

Ambulance has the meaning given in § 86.1803.

Defeat device means an auxiliary emission control device (AECD) that reduces the effectiveness of the emission control system under conditions which may reasonably be expected to be encountered in normal vehicle operation and use, unless:

(1) Such conditions are substantially included in the applicable Federal emission test procedure for heavy-duty vehicles and heavy-duty engines described in subpart N of this part;

(2) The need for the AECD is justified in terms of protecting the vehicle against damage or accident;

(3) The AECD does not go beyond the requirements of engine starting; or

(4) The AECD applies only for engines that will be installed in *emergency vehicles*, and the need is justified in terms of preventing the engine from losing speed, torque, or power due abnormal conditions of the emission control system, or in terms of preventing such abnormal conditions from occurring, during operation related to emergency response. Examples of such abnormal conditions may include excessive exhaust backpressure from an overloaded particulate trap, and running out of diesel exhaust fluid for engines that rely on urea-based selective catalytic reduction.

Diesel exhaust fluid (DEF) means a liquid reducing agent (other than the engine fuel) used in conjunction with selective catalytic reduction to reduce NO_X emissions. *Diesel exhaust fluid* is generally understood to be an aqueous solution of urea conforming to the specifications of ISO 22241.

Emergency vehicle has the meaning given in 40 CFR 1037.801.

Fire truck has the meaning given in § 86.1803.

U.S.-directed production means the engines and/or vehicles (as applicable) produced by a manufacturer for which the manufacturer has reasonable assurance that sale was or will be made to ultimate purchasers in the United States, excluding engines and/or vehicles that are certified to state emission standards different than the emission standards in this part.

Useful life means:

(1) For light-duty vehicles, and for light light-duty trucks not subject to the Tier 0 standards of § 86.094–9(a), intermediate useful life and/or full useful life. Intermediate useful life is a period of use of 5 years or 50,000 miles, whichever occurs first. Full useful life is a period of use of 10 years or 100,000 miles, whichever occurs first, except as otherwise noted in § 86.094–9. The useful life of evaporative and/or refueling emission control systems on the portion of these vehicles subject to the evaporative emission test requirements of § 86.130–96, and/or the refueling emission test requirements of § 86.151–98, is defined as a period of use of 10 years or 100,000 miles, whichever occurs first.

(2) For light light-duty trucks subject to the Tier 0 standards of § 86.094–9(a), and for heavy light-duty truck engine families, intermediate and/or full useful life. Intermediate useful life is a period of use of 5 years or 50,000 miles, whichever occurs first. Full useful life

is a period of use of 11 years or 120,000 miles, whichever occurs first. The useful life of evaporative emission and/or refueling control systems on the portion of these vehicles subject to the evaporative emission test requirements of § 86.130–96, and/or the refueling emission test requirements of § 86.151–98, is also defined as a period of 11 years or 120,000 miles, whichever occurs first.

(3) For an Otto-cycle HDE family:

(i) For hydrocarbon and carbon monoxide standards, a period of use of 10 years or 110,000 miles, whichever first occurs.

(ii) For the oxides of nitrogen standard, a period of use of 10 years or 110,000 miles, whichever first occurs.

(iii) For the portion of evaporative emission control systems subject to the evaporative emission test requirements of § 86.1230–96, a period of use of 10 years or 110,000 miles, whichever first occurs.

(4) For a diesel HDE family:

(i) For light heavy-duty diesel engines, for carbon monoxide, particulate, and oxides of nitrogen plus nonmethane hydrocarbons emissions standards, a period of use of 10 years or 110,000 miles, whichever first occurs.

(ii) For medium heavy-duty diesel engines, for carbon monoxide, particulate, and oxides of nitrogen plus nonmethane hydrocarbons emission standards, a period of use of 10 years or 185,000 miles, whichever first occurs.

(iii) For heavy heavy-duty diesel engines, for carbon monoxide, particulate, and oxides of nitrogen plus nonmethane hydrocarbon emissions standards, a period of use of 10 years or 435,000 miles, or 22,000 hours, whichever first occurs, except as provided in paragraphs (4)(iv) and (4)(v) of this definition.

(iv) The useful life limit of 22,000 hours in paragraph (4)(iii) of this definition is effective as a limit to the useful life only when an accurate hours meter is provided by the manufacturer with the engine and only when such hours meter can reasonably be expected to operate properly over the useful life of the engine.

(v) For an individual engine, if the useful life hours limit of 22,000 hours is reached before the engine reaches 10 years or 100,000 miles, the useful life shall become 10 years or 100,000 miles, whichever occurs first, as required under Clean Air Act section 202(d).

(5) As an option for both light-duty trucks under certain conditions and HDE families, an alternative useful life period may be assigned by the Administrator under the provisions of § 86.094–21(f).

Warranty period, for purposes of HDE emissions defect warranty and emissions performance warranty, shall be a period of 5 years/50,000 miles, whichever occurs first, for Otto-cycle HDEs and light heavy-duty diesel engines. For all other heavy-duty diesel engines the aforementioned period shall be 5 years/100,000 miles, whichever occurs first. However, in no case may this period be less than the basic mechanical warranty period that the manufacturer provides (with or without additional charge) to the purchaser of the engine. Extended warranties on select parts do not extend the emissions warranty requirements for the entire engine but only for those parts. In cases where responsibility for an extended warranty is shared between the owner and the manufacturer, the emissions warranty shall also be shared in the same manner as specified in the warranty agreement.

[62 FR 54720, Oct. 21, 1997, as amended at 65 FR 59945, Oct. 6, 2000; 66 FR 5159, Jan. 18, 2001; 77 FR 34145, June 8, 2012; 79 FR 46371, Aug. 8, 2014; 81 FR 73973, Oct. 25, 2016]

§ 86.004–11 Emission standards for 2004 and later model year diesel heavy-duty engines and vehicles.

This section applies to 2004 and later model year diesel HDEs.

(a)(1) Exhaust emissions from new 2004 and later model year diesel HDEs shall not exceed the following:

(i)(A) Oxides of Nitrogen plus Nonmethane Hydrocarbons (NO_X + NMHC) for engines fueled with either petroleum fuel, natural gas, or liquefied petroleum gas, 2.4 grams per brake horsepower-hour (0.89 gram per megajoule), as measured under transient operating conditions.

(B) Oxides of Nitrogen plus Nonmethane Hydrocarbon Equivalent (NO_X + NMHCE) for engines fueled with methanol, 2.4 grams per brake horsepower-hour (0.89 gram per megajoule),

as measured under transient operating conditions.

(C) *Optional standard.* Manufacturers may elect to certify to an Oxides of Nitrogen plus Non-methane Hydrocarbons (or equivalent for methanol-fueled engines) standard of 2.5 grams per brake horsepower-hour (0.93 gram per megajoule), as measured under transient operating conditions, provided that Non-methane Hydrocarbons (or equivalent for methanol-fueled engines) do not exceed 0.5 grams per brake horsepower-hour (0.19 gram per megajoule) NMHC (or NMHCE for methanol-fueled engines), as measured under transient operating conditions.

(D) A manufacturer may elect to include any or all of its diesel HDE families in any or all of the emissions ABT programs for HDEs, within the restrictions described in § 86.004–15 or superseding applicable sections. If the manufacturer elects to include engine families in any of these programs, the NO_X plus NMHC (or NO_X plus NMHCE for methanol-fueled engines) FELs may not exceed 4.5 grams per brake horsepower-hour (1.7 grams per megajoule). This ceiling value applies whether credits for the family are derived from averaging, banking, or trading programs. Additionally, families certified to the optional standard contained in paragraph (a)(1)(i)(C) of this section shall not exceed 0.50 grams per brake horsepower-hour (0.19 gram per megajoule) NMHC (or NMHCE for methanol-fueled engines) through the use of credits.

(E) [Reserved]

(ii) *Carbon monoxide.* (A) 15.5 grams per brake horsepower-hour (5.77 grams per megajoule), as measured under transient operating conditions.

(B) 0.50 percent of exhaust gas flow at curb idle (methanol-, natural gas-, and liquefied petroleum gas-fueled diesel HDEs only).

(iii) *Particulate.* (A) For diesel engines to be used in urban buses, 0.05 gram per brake horsepower-hour (0.019 gram per megajoule) for certification testing and selective enforcement audit testing, and 0.07 gram per brake horsepower-hour (0.026 gram per megajoule) for in-use testing, as measured under transient operating conditions.

(B) For all other diesel engines, 0.10 gram per brake horsepower-hour (0.037 gram per megajoule), as measured under transient operating conditions.

(C) A manufacturer may elect to include any or all of its diesel HDE families in any or all of the particulate ABT programs for HDEs, within the restrictions described in § 86.004–15 or superseding applicable sections. If the manufacturer elects to include engine families in any of these programs, the particulate FEL may not exceed 0.25 gram per brake horsepower-hour (0.093 gram per megajoule).

(2) The standards set forth in paragraph (a)(1) of this section refer to the exhaust emitted over the operating schedule set forth in paragraph (f)(2) of appendix I to this part, and measured and calculated in accordance with the procedures set forth in subpart N or P of this part, except as noted in § 86.098–23(c)(2) or superceding sections.

(b)(1) The opacity of smoke emission from new 2004 and later model year diesel HDEs shall not exceed:

(i) 20 percent during the engine acceleration mode.

(ii) 15 percent during the engine lugging mode.

(iii) 50 percent during the peaks in either mode.

(2) The standards set forth in paragraph (b)(1) of this section refer to exhaust smoke emissions generated under the conditions set forth in subpart I of this part and measured and calculated in accordance with those procedures.

(3) This paragraph (b)(3) applies as specified in 40 CFR 1037.103. Evaporative emissions (total of non-oxygenated hydrocarbons plus methanol) from heavy-duty vehicles equipped with methanol-fueled diesel engines shall not exceed the following standards. The standards apply equally to certification and in-use vehicles. The spitback standard also applies to newly assembled vehicles.

(i) For vehicles with a Gross Vehicle Weight Rating of up to 14,000 lbs:

(A)(*1*) For the full three-diurnal test sequence described in § 86.1230–96, diurnal plus hot soak measurements: 3.0 grams per test.

(*2*) For the supplemental two-diurnal test sequence described in § 86.1230–96,

diurnal plus hot soak measurements: 3.5 grams per test.

(B) Running loss test: 0.05 grams per mile.

(C) Fuel dispensing spitback test: 1.0 gram per test.

(ii) For vehicles with a Gross Vehicle Weight Rating of greater than 14,000 lbs:

(A)(*1*) For the full three-diurnal test sequence described in § 86.1230–96, diurnal plus hot soak measurements: 4.0 grams per test.

(*2*) For the supplemental two-diurnal test sequence described in § 86.1230–96, diurnal plus hot soak measurements: 4.5 grams per test.

(B) Running loss test: 0.05 grams per mile.

(iii)(A) For vehicles with a Gross Vehicle Weight Rating of up to 26,000 lbs, the standards set forth in paragraph (b)(3) of this section refer to a composite sample of evaporative emissions collected under the conditions and measured in accordance with the procedures set forth in subpart M of this part. For certification vehicles only, manufacturers may conduct testing to quantify a level of nonfuel background emissions for an individual test vehicle. Such a demonstration must include a description of the source(s) of emissions and an estimated decay rate. The demonstrated level of nonfuel background emissions may be subtracted from emission test results from certification vehicles if approved in advance by the Administrator.

(B) For vehicles with a Gross Vehicle Weight Rating of greater than 26,000 lbs., the standards set forth in paragraph (b)(3)(ii) of this section refer to the manufacturer's engineering design evaluation using good engineering practice (a statement of which is required in § 86.091–23(b)(4)(ii)).

(iv) All fuel vapor generated during in-use operations shall be routed exclusively to the evaporative control system (e.g., either canister or engine purge). The only exception to this requirement shall be for emergencies.

(4) This paragraph (b)(4) applies as specified in 40 CFR 1037.103. Evaporative emissions from 2004 and later model year heavy-duty vehicles equipped with natural gas-fueled or liquefied petroleum gas-fueled HDEs shall not exceed the following standards. The standards apply equally to certification and in-use vehicles.

(i) For vehicles with a Gross Vehicle Weight Rating of up to 14,000 pounds for the full three-diurnal test sequence described in § 86.1230–96, diurnal plus hot soak measurements: 3.0 grams per test.

(ii) For vehicles with a Gross Vehicle Weight Rating of greater than 14,000 pounds for the full three-diurnal test sequence described in § 86.1230–96, diurnal plus hot soak measurements: 4.0 grams per test.

(iii)(A) For vehicles with a Gross Vehicle Weight Rating of up to 26,000 pounds, the standards set forth in paragraph (b)(4) of this section refer to a composite sample of evaporative emissions collected under the conditions set forth in subpart M of this part and measured in accordance with those procedures.

(B) For vehicles with a Gross Vehicle Weight Rating greater than 26,000 pounds, the standards set forth in paragraphs (b)(3)(ii) and (b)(4)(ii) of this section refer to the manufacturer's engineering design evaluation using good engineering practice (a statement of which is required in § 86.091–23(b)(4)(ii)).

(iv) Compressed natural gas vehicles must meet the requirements for fueling connection devices as specified in § 86.1813–17(f)(1). Vehicles meeting these requirements are deemed to comply with evaporative emission standards.

(c) No crankcase emissions shall be discharged into the ambient atmosphere from any new 2004 or later model year methanol-, natural gas-, or liquefied petroleum gas-fueled diesel, or any naturally-aspirated diesel HDE. For petroleum-fueled engines only, this provision does not apply to engines using turbochargers, pumps, blowers, or superchargers for air induction.

(d) Every manufacturer of new motor vehicle engines subject to the standards prescribed in this section shall, prior to taking any of the actions specified in section 203(a)(1) of the Act, test or cause to be tested motor vehicle engines in accordance with applicable procedures in subpart I or N of this part to ascertain that such test engines meet the requirements of this section.

(e) The standards described in this section do not apply to diesel-fueled medium-duty passenger vehicles (MDPVs) that are subject to regulation under subpart S of this part, except as specified in subpart S of this part. The standards described in this section also do not apply to diesel engines used in such MDPVs, except as specified in the regulations in subpart S of this part. The term ''medium-duty passenger vehicle'' is defined in § 86.1803.

[62 FR 54721, Oct. 21, 1997, as amended at 65 FR 6848, Feb. 10, 2000; 65 FR 59945, Oct. 6, 2000; 79 FR 23688, Apr. 28, 2014]

§ 86.004–15 NO_X plus NMHC and particulate averaging, trading, and banking for heavy-duty engines.

(a)(1) Heavy-duty engines eligible for NO_X plus NMHC and particulate averaging, trading and banking programs are described in the applicable emission standards sections in this subpart. All heavy-duty engine families which include any engines labeled for use in clean-fuel vehicles as specified in 40 CFR part 88 are not eligible for these programs. For manufacturers not selecting Options 1 or 2 contained in § 86.005–10(f), the ABT program requirements contained in § 86.000–15 apply for 2004 model year Otto-cycle engines, rather than the provisions contained in this § 86.004–15. Participation in these programs is voluntary.

(2)(i) Engine families with FELs exceeding the applicable standard shall obtain emission credits in a mass amount sufficient to address the shortfall. Credits may be obtained from averaging, trading, or banking, within the averaging set restrictions described in this section.

(ii) Engine families with FELs below the applicable standard will have emission credits available to average, trade, bank or a combination thereof. Credits may not be used for averaging or trading to offset emissions that exceed an FEL. Credits may not be used to remedy an in-use nonconformity determined by a Selective Enforcement Audit or by recall testing. However, credits may be used to allow subsequent production of engines for the family in question if the manufacturer elects to recertify to a higher FEL.

(b) Participation in the NO_X plus NMHC and/or particulate averaging, trading, and banking programs shall be done as follows:

(1) During certification, the manufacturer shall:

(i) Declare its intent to include specific engine families in the averaging, trading and/or banking programs. Separate declarations are required for each program and for each pollutant (i.e., NO_X plus NMHC, and particulate).

(ii) Declare an FEL for each engine family participating in one or more of these two programs.

(A) The FEL must be to the same level of significant digits as the emission standard (one-tenth of a gram per brake horsepower-hour for NO_X plus NMHC emissions and one-hundredth of a gram per brake horsepower-hour for particulate emissions).

(B) In no case may the FEL exceed the upper limit prescribed in the section concerning the applicable heavy-duty engine NO_X plus NMHC and particulate emission standards.

(iii) Calculate the projected emission credits (positive or negative) based on quarterly production projections for each participating family and for each pollutant, using the applicable equation in paragraph (c) of this section and the applicable factors for the specific engine family.

(iv)(A) Determine and state the source of the needed credits according to quarterly projected production for engine families requiring credits for certification.

(B) State where the quarterly projected credits will be applied for engine families generating credits.

(C) Credits may be obtained from or applied to only engine families within the same averaging set as described in paragraph (d) or (e) of this section. Credits available for averaging, trading, or banking as defined in § 86.090–2, may be applied exclusively to a given engine family, or reserved as defined in § 86.091–2.

(2) Based on this information each manufacturer's certification application must demonstrate:

(i) That at the end of model year production, each engine family has a net emissions credit balance of zero or

more using the methodology in paragraph (c) of this section with any credits obtained from averaging, trading or banking.

(ii) The source of the credits to be used to comply with the emission standard if the FEL exceeds the standard, or where credits will be applied if the FEL is less than the emission standard. In cases where credits are being obtained, each engine family involved must state specifically the source (manufacturer/engine family) of the credits being used. In cases where credits are being generated/supplied, each engine family involved must state specifically the designated use (manufacturer/engine family or reserved) of the credits involved. All such reports shall include all credits involved in averaging, trading or banking.

(3) During the model year manufacturers must:

(i) Monitor projected versus actual production to be certain that compliance with the emission standards is achieved at the end of the model year.

(ii) Provide the end-of-model year reports required under § 86.001–23.

(iii) For manufacturers participating in emission credit trading, maintain the quarterly records required under § 86.091–7(c)(8).

(4) Projected credits based on information supplied in the certification application may be used to obtain a certificate of conformity. However, any such credits may be revoked based on review of end-of-model year reports, follow-up audits, and any other compliance measures deemed appropriate by the Administrator.

(5) Compliance under averaging, banking, and trading will be determined at the end of the model year. Engine families without an adequate amount of NO_X. NO_X plus NMHC, and/or particulate emission credits will violate the conditions of the certificate of conformity. The certificates of conformity may be voided ab initio for engine families exceeding the emission standard.

(6) If EPA or the manufacturer determines that a reporting error occurred on an end-of-year report previously submitted to EPA under this section, the manufacturer's credits and credit calculations will be recalculated. Erroneous positive credits will be void. Erroneous negative balances may be adjusted by EPA for retroactive use.

(i) If EPA review of a manufacturer's end-of-year report indicates a credit shortfall, the manufacturer will be permitted to purchase the necessary credits to bring the credit balance for that engine family to zero, using the discount specified in paragraph (c)(1) of this section on the ratio of credits purchased for every credit needed to bring the balance to zero. If sufficient credits are not available to bring the credit balance for the family in question to zero, EPA may void the certificate for that engine family ab initio.

(ii) If within 180 days of receipt of the manufacturer's end-of-year report, EPA review determines a reporting error in the manufacturer's favor (i.e., resulting in a positive credit balance) or if the manufacturer discovers such an error within 180 days of EPA receipt of the end-of-year report, the credits will be restored for use by the manufacturer.

(c)(1) For each participating engine family, NO_X plus NMHC, and particulate emission credits (positive or negative) are to be calculated according to one of the following equations and rounded, in accordance with ASTM E29–93a (incorporated by reference at § 86.1), to the nearest one-tenth of a Megagram (Mg). Consistent units are to be used throughout the equation.

(i) For determining credit need for all engine families and credit availability for engine families generating credits for averaging programs only:

$$\text{Emission credits} = (\text{Std} - \text{FEL}) \times (\text{CF}) \times (\text{UL}) \times (\text{Production}) \times (10^{-6})$$

(ii) For determining credit availability for engine families generating credits for trading or banking programs:

$$\text{Emission credits} = (\text{Std} - \text{FEL}) \times (\text{CF}) \times (\text{UL}) \times (\text{Production}) \times (10^{-6}) \times (\text{Discount})$$

(iii) For purposes of the equation in paragraphs (c)(1)(i) and (ii) of this section:

Std = the current and applicable heavy-duty engine NO_X plus NMHC or particulate emission standard in grams per brake horsepower hour or grams per Megajoule.

FEL = the NO_X plus NMHC, or particulate family emission limit for the engine family in grams per brake horsepower hour or grams per Megajoule.

CF = a transient cycle conversion factor in BHP-hr/mi or MJ/mi, as given in paragraph (c)(2) of this section.

UL = the useful life described in § 86.004–2, or alternative life as described in § 86.004–21(f), for the given engine family in miles.

Production = the number of engines produced for U.S. sales within the given engine family during the model year. Quarterly production projections are used for initial certification. Actual production is used for end-of-year compliance determination.

Discount = a one-time discount applied to all credits to be banked or traded within the model year generated. Except as otherwise allowed in paragraphs (k) and (l) of this section, the discount applied here is 0.9. Banked credits traded in a subsequent model year will not be subject to an additional discount. Banked credits used in a subsequent model year's averaging program will not have the discount restored.

(2)(i) The transient cycle conversion factor is the total (integrated) cycle brake horsepower-hour or Megajoules, divided by the equivalent mileage of the applicable transient cycle. For Otto-cycle heavy-duty engines, the equivalent mileage is 6.3 miles. For diesel heavy-duty engines, the equivalent mileage is 6.5 miles.

(ii) When more than one configuration is chosen by EPA to be tested in the certification of an engine family (as described in § 86.085–24), the conversion factor used is to be based upon a production weighted average value of the configurations in an engine family to calculate the conversion factor.

(d) *Averaging sets for NO_X plus NMHC emission credits.* The averaging and trading of NO_X plus NMHC emission credits will only be allowed between heavy-duty engine families in the same averaging set. The averaging sets for the averaging and trading of NO_X plus NMHC emission credits for heavy-duty engines are defined as follows:

(1) For NO_X + NMHC credits from Otto-cycle heavy-duty engines:

(i) Otto-cycle heavy-duty engines constitute an averaging set. Averaging and trading among all Otto-cycle heavy-duty engine families is allowed. There are no subclass restrictions.

(ii) Otto-cycle heavy-duty vehicles certified under the chassis-based provisions of subpart S of this part may not average or trade with heavy-duty Otto-cycle engines except as allowed in § 86.1817–05(o).

(2) For NO_X plus NMHC credits from diesel-cycle heavy-duty engines:

(i) Each of the three primary intended service classes for heavy-duty diesel engines, as defined in § 86.004–2, constitute an averaging set. Averaging and trading among all diesel-cycle engine families within the same primary service class is allowed.

(ii) Urban buses are treated as members of the primary intended service class where they otherwise would fall.

(e) *Averaging sets for particulate emission credits.* The averaging and trading of particulate emission credits will only be allowed between diesel cycle heavy-duty engine families in the same averaging set. The averaging sets for the averaging and trading of particulate emission credits for diesel cycle heavy-duty engines are defined as follows:

(1) Engines intended for use in urban buses constitute a separate averaging set from all other heavy-duty engines. Averaging and trading between diesel cycle bus engine families is allowed.

(2) For heavy-duty engines, exclusive of urban bus engines, each of the three primary intended service classes for heavy-duty diesel cycle engines, as defined in § 86.004–2, constitute an averaging set. Averaging and trading between diesel-cycle engine families within the same primary service class is allowed.

(3) Otto cycle engines may not participate in particulate averaging, trading, or banking.

(f) *Banking of NO_X plus NMHC, and particulate emission credits*—(1) *Credit deposits.* (i) NO_X plus NMHC, and particulate emission credits may be banked from engine families produced in any model year.

(ii) Manufacturers may bank credits only after the end of the model year and after actual credits have been reported to EPA in the end-of-year report. During the model year and before submittal of the end-of-year report, credits originally designated in the certification process for banking will

be considered reserved and may be redesignated for trading or averaging.

(2) *Credit withdrawals.* (i) NO_X plus NMHC and particulate credits generated in 2004 and later model years do not expire. NO_X plus NMHC credits generated by Otto-cycle engines in the 2003 model year for manufacturers selecting Option 1 contained in § 86.005–10(f)(1) also do not expire.

(ii) Manufacturers withdrawing banked NO_X plus NMHC, and/or particulate credits shall indicate so during certification and in their credit reports, as described in § 86.091–23.

(3) *Use of banked emission credits.* The use of banked credits shall be within the averaging set and other restrictions described in paragraphs (d) and (e) of this section, and only for the following purposes:

(i) Banked credits may be used in averaging, or in trading, or in any combination thereof, during the certification period. Credits declared for banking from the previous model year but not reported to EPA may also be used. However, if EPA finds that the reported credits can not be proven, they will be revoked and unavailable for use.

(ii) Banked credits may not be used for NO_X plus NMHC or particulate averaging and trading to offset emissions that exceed an FEL. Banked credits may not be used to remedy an in-use nonconformity determined by a Selective Enforcement Audit or by recall testing. However, banked credits may be used for subsequent production of the engine family if the manufacturer elects to recertify to a higher FEL.

(iii) NO_X credits banked under paragraph § 86.098–15(j) or § 86.000–15(k) may be used in place of NO_X plus NMHC credits in 2004 and later model years provided that they are used in the correct averaging set. NO_X credits banked under paragraph § 86.000–15(k) may also be used in place of NO_X plus NMHC credits in the 2003 model year for manufacturers selecting Option 1 contained in § 86.005–10(f)(1), provided that they are used in the correct averaging set.

(iv) Except for early credits banked under § 86.000–15(k), NO_X credits banked in accordance with § 86.000–15 may not be used to meet the Otto-cycle engine standards contained in § 86.005–10.

(g)(1) This paragraph (g) assumes NO_X plus NMHC, and particulate nonconformance penalties (NCPs) will be available for the 2004 and later model year HDEs.

(2) Engine families using NO_X plus NMHC and/or particulate NCPs but not involved in averaging:

(i) May not generate NO_X plus NMHC or particulate credits for banking and trading.

(ii) May not use NO_X plus NMHC or particulate credits from banking and trading.

(3) If a manufacturer has any engine family to which application of NCPs and banking and trading credits is desired, that family must be separated into two distinct families. One family, whose FEL equals the standard, must use NCPs only while the other, whose FEL does not equal the standard, must use credits only.

(4) If a manufacturer has any engine family in a given averaging set which is using NO_X plus NMHC and/or particulate NCPs, none of that manufacturer's engine families in that averaging set may generate credits for banking and trading.

(h) In the event of a negative credit balance in a trading situation, both the buyer and the seller would be liable.

(i) Certification fuel used for credit generation must be of a type that is both available in use and expected to be used by the engine purchaser. Therefore, upon request by the Administrator, the engine manufacturer must provide information acceptable to the Administrator that the designated fuel is readily available commercially and would be used in customer service.

(j) *Credit apportionment.* At the manufacturer's option, credits generated under the provisions described in this section may be sold to or otherwise provided to another party for use in programs other than the averaging, trading and banking program described in this section.

(1) The manufacturer shall pre-identify two emission levels per engine family for the purposes of credit apportionment. One emission level shall be the FEL and the other shall be the level of the standard that the engine family is required to certify to under § 86.005–10 or § 86.004–11. For each engine

family, the manufacturer may report engine sales in two categories, ''ABT-only credits'' and ''nonmanufacturer-owned credits''.

(i) For engine sales reported as ''ABT-only credits'', the credits generated must be used solely in the ABT program described in this section.

(ii) The engine manufacturer may declare a portion of engine sales ''nonmanufacturer-owned credits'' and this portion of the credits generated between the standard and the FEL, based on the calculation in (c)(1) of this section, would belong to the engine purchaser. For ABT, the manufacturer may not generate any credits for the engine sales reported as ''nonmanufacturer-owned credits''. Engines reported as ''nonmanufacturer-owned credits'' shall comply with the FEL and the requirements of the ABT program in all other respects.

(2) Only manufacturer-owned credits reported as ''ABT-only credits'' shall be used in the averaging, trading, and banking provisions described in this section.

(3) Credits shall not be double-counted. Credits used in the ABT program may not be provided to an engine purchaser for use in another program.

(4) Manufacturers shall determine and state the number of engines sold as ''ABT-only credits'' and ''nonmanufacturer-owned credits'' in the end-of-model year reports required under § 86.001–23.

(k) *Additional flexibility for diesel-cycle engines.* If a diesel-cycle engine family meets the conditions of either paragraph (k)(1) or (2) of this section, a Discount of 1.0 may be used in the trading and banking calculation, for both NO_X plus NMHC and for particulate, described in paragraph (c)(1) of this section.

(1) The engine family certifies with a certification level of 1.9 g/bhp-hr NO_X plus NMHC or lower for all diesel-cycle engine families.

(2) All of the following must apply to the engine family:

(i) Diesel-cycle engines only;

(ii) 2004, 2005, and 2006 model years only;

(iii) Must be an engine family using carry-over certification data from prior to model year 2004 where the NO_X plus the HC certification level prior to model year 2004 is below the NO_X plus NMHC or NO_X plus NMHCE standard set forth in § 86.004–11. Under this option, the NO_X credits generated from this engine family prior to model year 2004 may be used as NO_X plus NMHC credits.

(l) *Additional flexibility for Otto-cycle engines.* If an Otto-cycle engine family meets the conditions of paragraph (l)(1) or (2) of this section, a discount of 1.0 may be used in the trading and banking credits calculation for NO_X plus NMHC described in paragraph (c)(1) of this section, as follows:

(1) The engine family has a FEL of 0.5 g/bhp-hr NO_X plus NMHC or lower;

(2) All of the following conditions are met:

(i) For first three consecutive model years that the engine family is certified to a NO_X plus NMHC standard contained in § 86.005–10;

(ii) The engine family is certified using carry-over data from an engine family which was used to generate early NO_X credits per § 86.000–15(k) where the sum of the NO_X FEL plus the HC (or hydrocarbon equivalent where applicable) certification level is below 1.0 g/bhp-hr.

[62 FR 54722, Oct. 21, 1997, as amended at 65 FR 59946, Oct. 6, 2000]

§ 86.004–16 Prohibition of defeat devices.

(a) No new heavy-duty vehicle or heavy-duty engine shall be equipped with a defeat device.

(b) The Administrator may test or require testing on any vehicle or engine at a designated location, using driving cycles and conditions which may reasonably be expected to be encountered in normal operation and use, for the purpose of investigating a potential defeat device.

(c) [Reserved]

(d) For vehicle and engine designs designated by the Administrator to be investigated for possible defeat devices:

(1) *General.* The manufacturer must show to the satisfaction of the Administrator that the vehicle or engine design does not incorporate strategies that reduce emission control effectiveness exhibited during the applicable Federal emissions test procedures when

the vehicle or engine is operated under conditions which may reasonably be expected to be encountered in normal operation and use, unless one of the specific exceptions set forth in the definition of ''defeat device'' in § 86.004–2 has been met.

(2) *Information submissions required.* The manufacturer will provide an explanation containing detailed information (including information which the Administrator may request to be submitted) regarding test programs, engineering evaluations, design specifications, calibrations, on-board computer algorithms, and design strategies incorporated for operation both during and outside of the applicable Federal emission test procedure.

[65 FR 59947, Oct. 6, 2000, as amended at 70 FR 40432, July 13, 2005]

§ 86.004–21 Application for certification.

Section 86.004–21 includes text that specifies requirements that differ from § 86.094–21. Where a paragraph in § 86.094–21 is identical and applicable to § 86.004–21, this may be indicated by specifying the corresponding paragraph and the statement ''[Reserved]. For guidance see § 86.094–21.''

(a)–(b)(3) [Reserved]. For guidance see § 86.094–21.

(b)(4)(i) [Reserved]

(b)(4)(ii)–(b)(5)(iv) [Reserved]. For guidance see § 86.094–21.

(6) *Participation in averaging programs*—(i) *Particulate averaging.* (A) If the manufacturer elects to participate in the particulate averaging program for diesel light-duty vehicles and/or diesel light-duty trucks or the particulate averaging program for heavy-duty diesel engines, the application must list the family particulate emission limit and the projected U.S. production volume of the family for the model year.

(B) The manufacturer shall choose the level of the family particulate emission limits, accurate to hundredth of a gram per mile or hundredth of a gram per brake horsepowerhour for HDEs.

(C) The manufacturer may at any time during production elect to change the level of any family particulate emission limit(s) by submitting the new limit(s) to the Administrator and by demonstrating compliance with the limit(s) as described in §§ 86.090–2 and 86.094–28(b)(5)(i).

(ii) *NO_X and NO_X plus NMHC averaging.* (A) If the manufacturer elects to participate in the NO_X averaging program for light-duty trucks or otto-cycle HDEs or the NO_X plus NMHC averaging program for diesel-cycle HDEs, the application must list the family emission limit and the projected U.S. production volume of the family for the model year.

(B) The manufacturer shall choose the level of the family emission limits, accurate to one-tenth of a gram per mile or to one-tenth of a gram per brake horsepower-hour for HDEs.

(C) The manufacturer may at any time during production elect to change the level of any family emission limit(s) by submitting the new limits to the Administrator and by demonstrating compliance with the limit(s) as described in §§ 86.088–2 and 86.094–28(b)(5)(ii).

(b)(7) and (b)(8) [Reserved]. For guidance see § 86.094–21.

(b)(9) For each light-duty vehicle, light-duty truck, evaporative/refueling emission family or heavy-duty vehicle evaporative emission family, a description of any unique procedures required to perform evaporative and/or refueling emission tests, as applicable, (including canister working capacity, canister bed volume, and fuel temperature profile for the running loss test) for all vehicles in that evaporative and/or evaporative/refueling emission family, and a description of the method used to develop those unique procedures.

(10) For each light-duty vehicle or applicable light-duty truck evaporative/refueling emission family, or each heavy-duty vehicle evaporative emission family:

(i) Canister working capacity, according to the procedures specified in § 86.132–96(h)(1)(iv);

(ii) Canister bed volume; and

(iii) Fuel temperature profile for the running loss test, according to the procedures specified in § 86.129–94(d).

(c)–(j) [Reserved]. For guidance see § 86.094–21.

(k)–(l) [Reserved]

(m) For model years 2004 through 2007, within 180 days after submission of the application for certification of a heavy-duty diesel engine, the manufacturer must provide emission test results from the Load Response Test conducted according to § 86.1380–2004, including, at a minimum, test results conducted at each of the speeds identified in § 86.1380–2004. Load Response Test data submissions are not necessary for carry-over engine families for which Load Response Test data has been previously submitted. In addition, upon approval of the Administrator, manufacturers may carry Load Response Test data across from one engine family to other engine families, provided that the carry-across engine families use similar emission control technology hardware which would be expected to result in the generation of similar emission data when run over the Load Response Test.

(n) Upon request from EPA, a manufacturer must provide to EPA any hardware (including scan tools), passwords, and/or documentation necessary for EPA to read, interpret, and store (in engineering units if applicable) any information broadcast by an engine's on-board computers and electronic control modules which relates in any way to emission control devices and auxiliary emission control devices, provided that such hardware, passwords, or documentation exists and is not otherwise commercially available. Passwords include any information necessary to enable generic scan tools or personal computers access to proprietary emission related information broadcast by an engine's on-board computer, if such passwords exist. This requirement includes access by EPA to any proprietary code information which may be broadcast by an engine's on-board computer and electronic control modules. Information which is confidential business information must be marked as such. Engineering units refers to the ability to read, interpret, and store information in commonly understood engineering units, for example, engine speed in revolutions per minute or per second, injection timing parameters such as start of injection in degree's before top-dead center, fueling rates in cubic centimeters per stroke, vehicle speed in miles per hour or kilometers per hour. This paragraph (n) does not restrict EPA authority to take any action authorized by section 208 of the Clean Air Act.

[62 FR 54724, Oct. 21, 1997, as amended at 65 FR 59947, Oct. 6, 2000; 79 FR 23688, Apr. 28, 2014]

§ 86.004–25 Maintenance.

Section 86.004–25 includes text that specifies requirements that differ from § 86.094–25. Where a paragraph in § 86.094–25 is applicable to § 86.004–25, this may be indicated by specifying the corresponding paragraph and the statement ''[Reserved]. For guidance see § 86.094–25.''.

(a)(1) *Applicability*. This section applies to light-duty vehicles, light-duty trucks, and HDEs.

(2) Maintenance performed on vehicles, engines, subsystems, or components used to determine exhaust, evaporative or refueling emission deterioration factors, as appropriate, is classified as either emission-related or non-emission-related and each of these can be classified as either scheduled or unscheduled. Further, some emission-related maintenance is also classified as critical emission-related maintenance.

(b) Introductory text through (b)(3)(ii) [Reserved]. For guidance see § 86.094–25.

(b)(3)(iii) For otto-cycle heavy-duty engines, the adjustment, cleaning, repair, or replacement of the items listed in paragraphs (b)(3)(iii) (A)–(E) of this section shall occur at 50,000 miles (or 1,500 hours) of use and at 50,000-mile (or 1,500-hour) intervals thereafter.

(A) Crankcase ventilation valves and filters.

(B) Emission-related hoses and tubes.

(C) Ignition wires.

(D) Idle mixture.

(E) Exhaust gas recirculation system related filters and coolers.

(iv) For otto-cycle light-duty vehicles, light-duty trucks and otto-cycle heavy-duty engines, the adjustment, cleaning, repair, or replacement of the oxygen sensor shall occur at 80,000 miles (or 2,400 hours) of use and at 80,000-mile (or 2,400-hour) intervals thereafter.

(v) For otto-cycle heavy-duty engines, the adjustment, cleaning, repair,

or replacement of the items listed in paragraphs (b)(3)(v) (A)–(H) of this section shall occur at 100,000 miles (or 3,000 hours) of use and at 100,000-mile (or 3,000-hour) intervals thereafter.

(A) Catalytic converter.

(B) Air injection system components.

(C) Fuel injectors.

(D) Electronic engine control unit and its associated sensors (except oxygen sensor) and actuators.

(E) Evaporative emission canister.

(F) Turbochargers.

(G) Carburetors.

(H) Exhaust gas recirculation system (including all related control valves and tubing) except as otherwise provided in paragraph (b)(3)(iii)(E) of this section.

(4) For diesel-cycle heavy-duty engines, emission-related maintenance in addition to or at shorter intervals than the following specified values will not be accepted as technologically necessary, except as provided in paragraph (b)(7) of this section:

(i) For diesel-cycle heavy-duty engines, the adjustment, cleaning, repair, or replacement of the following items shall occur at 50,000 miles (or 1,500 hours) of use and at 50,000-mile (or 1,500-hour) intervals thereafter:

(A) Exhaust gas recirculation system related filters and coolers.

(B) Crankcase ventilation valves and filters.

(C) Fuel injector tips (cleaning only).

(D) DEF filters.

(ii) [Reserved]

(iii) The adjustment, cleaning, repair, or replacement of items listed in paragraphs (b)(4)(iii) (A)–(G) of this section shall occur at 100,000 miles (or 3,000 hours) of use and at 100,000-mile (or 3,000-hour) intervals thereafter for light heavy-duty diesel engines, or, at 150,000 miles (or 4,500 hours) intervals thereafter for medium and heavy heavy-duty diesel engines.

(A) Fuel injectors.

(B) Turbocharger.

(C) Electronic engine control unit and its associated sensors and actuators.

(D) Particulate trap or trap oxidizer systems including related components (adjustment and cleaning only for filter element, replacement of the filter element is not allowed during the useful life).

(E) Exhaust gas recirculation system (including all related control valves and tubing) except as otherwise provided in paragraph (b)(4)(i)(A) of this section.

(F) Catalytic converter (adjustment and cleaning only for catalyst beds, replacement of the bed is not allowed during the useful life).

(G) Any other add-on emissions-related component (i.e., a component whose sole or primary purpose is to reduce emissions or whose failure will significantly degrade emissions control and whose function is not integral to the design and performance of the engine.)

(iv) [Reserved]

(v) For engines that use selective catalytic reduction, the diesel exhaust fluid (DEF) tank must be sized so that DEF replenishment can occur at an interval, in miles or hours of vehicle operation, that is no less than the miles or hours of vehicle operation corresponding to the vehicle's fuel capacity. Use good engineering judgment to ensure that you meet this requirement for worst-case operation. For example, if the highest rate of DEF consumption (relative to fuel consumption) will occur under highway driving conditions (characterized by the SET), the DEF tank should be large enough that a single tankful of DEF would be enough to continue proper operation of the SCR system for the expected highway driving range with a single tank of fuel. Conversely, if the highest rate of DEF consumption (relative to fuel consumption) will occur under city or urban driving conditions (characterized by the transient FTP test), the DEF tank should be large enough that a single tank of DEF would be enough to continue proper operation of the SCR system for the expected city driving range with a single tank of fuel. For engine testing in a laboratory, any size DEF tank and fuel tank may be used; however, for our testing of engines, we may require you to provide us with a production-type DEF tank, including any associated sensors.

(5) [Reserved]

(6)(i) The following components are defined as critical emission-related components:

(A) Catalytic converter.

(B) Air injection system components.

(C) Electronic engine control unit and its associated sensors (including oxygen sensor if installed) and actuators.

(D) Exhaust gas recirculation system (including all related filters, coolers, control valves, and tubing).

(E) Crankcase ventilation valves and filters.

(F) Evaporative and refueling emission control system components (excluding canister air filter).

(G) Particulate trap or trap-oxidizer system.

(H) Components comprising the selective catalytic reduction system (including DEF tank).

(I) Any other component whose primary purpose is to reduce emissions or whose failure would commonly increase emissions of any regulated pollutant without significantly degrading engine performance.

(ii) All critical emission-related scheduled maintenance must have a reasonable likelihood of being performed in-use. The manufacturer shall be required to show the reasonable likelihood of such maintenance being performed in-use, and such showing shall be made prior to the performance of the maintenance on the durability data engine. Critical emission-related scheduled maintenance items which satisfy one of the conditions defined in paragraphs (b)(6)(ii) (A)–(F) of this section will be accepted as having a reasonable likelihood of the maintenance item being performed in-use, except that DEF replenishment must satisfy paragraph (b)(6)(ii)(A) or (F) of this section to be accepted as having a reasonable likelihood of the maintenance item being performed in-use.

(A) Data are presented which establish for the Administrator a connection between emissions and vehicle performance such that as emissions increase due to lack of maintenance, vehicle performance will simultaneously deteriorate to a point unacceptable for typical driving.

(B) Survey data are submitted which adequately demonstrate to the Administrator that, at an 80 percent confidence level, 80 percent of such engines already have this critical maintenance item performed in-use at the recommended interval(s).

(C) A clearly displayed visible signal system approved by the Administrator is installed to alert the vehicle driver that maintenance is due. A signal bearing the message ''maintenance needed'' or ''check engine'', or a similar message approved by the Administrator, shall be actuated at the appropriate mileage point or by component failure. This signal must be continuous while the engine is in operation and not be easily eliminated without performance of the required maintenance. Resetting the signal shall be a required step in the maintenance operation. The method for resetting the signal system shall be approved by the Administrator. For HDEs, the system must not be designed to deactivate upon the end of the useful life of the engine or thereafter.

(D) A manufacturer may desire to demonstrate through a survey that a critical maintenance item is likely to be performed without a visible signal on a maintenance item for which there is no prior in-use experience without the signal. To that end, the manufacturer may in a given model year market up to 200 randomly selected vehicles per critical emission-related maintenance item without such visible signals, and monitor the performance of the critical maintenance item by the owners to show compliance with paragraph (b)(6)(ii)(B) of this section. This option is restricted to two consecutive model years and may not be repeated until any previous survey has been completed. If the critical maintenance involves more than one engine family, the sample will be sales weighted to ensure that it is representative of all the families in question.

(E) The manufacturer provides the maintenance free of charge, and clearly informs the customer that the maintenance is free in the instructions provided under § 86.087–38.

(F) Any other method which the Administrator approves as establishing a reasonable likelihood that the critical maintenance will be performed in-use.

(iii) Visible signal systems used under paragraph (b)(6)(ii)(C) of this section are considered an element of design of the emission control system. Therefore, disabling, resetting, or otherwise rendering such signals inoperative without also performing the indicated maintenance procedure is a prohibited act under section 203(a)(3) of the Clean Air Act (42 U.S.C. 7522(a)(3)).

(b)(7)–(h) [Reserved]. For guidance see § 86.094–25.

(i) Notwithstanding the provisions of paragraph (b)(4) and (6) of this section, manufacturers may schedule replacement or repair of particulate trap (or trap oxidizer) systems or catalytic converters (including NO_X adsorbers), provided that the manufacturer demonstrates to the Administrator's satisfaction that the repair or replacement will be performed according to the schedule and the manufacturer pays for the repair or replacement.

[62 FR 54725, Oct. 21, 1997, as amended at 79 FR 23688, Apr. 28, 2014; 79 FR 46371, Aug. 8, 2014; 81 FR 73973, Oct. 25, 2016]

§ 86.004–26 Mileage and service accumulation; emission measurements.

(a)–(b) [Reserved]

(c)(1) Paragraph (c) of this section applies to heavy-duty engines.

(2) Two types of service accumulation are applicable to heavy-duty engines, as described in paragraphs (c)(2)(i) and (ii) of this section. For Otto-cycle heavy-duty engines exhaust emissions, the service accumulation method used by a manufacturer must be designed to effectively predict the deterioration of emissions in actual use over the full useful life of the of the candidate in-use vehicles and must cover the breadth of the manufacturer's product line that will be covered by the durability procedure. Manufacturers not selecting Options 1 or 2 described in § 86.005–10(f) may certify Otto-cycle engines using the provisions contained in § 86.094–26(c)(2) rather than those contained in this paragraph (c)(2) for 2004 model year engine families certified using carry-over durability data, except for those engines used for early credit banking as allowed in § 86.000–15(k).

(i) Service accumulation on engines, subsystems, or components selected by the manufacturer under § 86.094–24(c)(3)(i). The manufacturer determines the form and extent of this service accumulation, consistent with good engineering practice, and describes it in the application for certification.

(ii) Dynamometer service accumulation on emission data engines selected under § 86.094–24(b)(2) or (3). The manufacturer determines the engine operating schedule to be used for dynamometer service accumulation, consistent with good engineering practice. A single engine operating schedule shall be used for all engines in an engine family-control system combination. Operating schedules may be different for different combinations.

(3) Exhaust emission deterioration factors will be determined on the basis of the service accumulation described in § 86.000–26(b)(2)(i) and related testing, according to the manufacturer's procedures.

(4) The manufacturer shall determine, for each engine family, the number of hours at which the engine system combination is stabilized for emission-data testing. The manufacturer shall maintain, and provide to the Administrator if requested, a record of the rationale used in making this determination. The manufacturer may elect to accumulate 125 hours on each test engine within an engine family without making a determination. Any engine used to represent emission-data engine selections under § 86.094–24(b)(2) shall be equipped with an engine system combination that has accumulated at least the number of hours determined under this paragraph. Complete exhaust emission tests shall be conducted for each emission-data engine selection under § 86.094–24(b)(2). Evaporative emission controls must be connected, as described in 40 CFR part 1065, subpart F. The Administrator may determine under § 86.094–24(f) that no testing is required.

(d)(1) This paragraph (d) applies for heavy-duty engines.

(2)(i) The results of all emission testing shall be supplied to the Administrator. The manufacturer shall furnish to the Administrator explanation for voiding any test. The Administrator will determine if voiding the test was appropriate based upon the explanation

given by the manufacturer for the voided test. Tests between test points may be conducted as required by the Administrator. Data from all tests (including voided tests) may be submitted weekly to the Administrator, but shall be delivered to the Administrator within 7 days after completion of the test. In addition, all test data shall be compiled and provided to the Administrator in accordance with § 86.007–23. Where the Administrator conducts a test on a durability data vehicle at a prescribed test point, the results of that test will be used in the calculation of the deterioration factor.

(ii) The results of all emission tests shall be recorded and reported to the Administrator. These test results shall be rounded as specified in 40 CFR part 1065 to the number of decimal places contained in the applicable emission standard expressed to one additional significant figure.

(3) Whenever a manufacturer intends to operate and test a vehicle (or engine) that may be used for emission data, the manufacturer shall retain in its records all information concerning all emission tests and maintenance, including vehicle (or engine) alterations to represent other vehicle (or engine) selections. This information shall be submitted, including the vehicle (or engine) description and specification information required by the Administrator, to the Administrator following the emission test.

(4) Emission testing of any type with respect to any certification vehicle or engine other than that specified in this subpart is not allowed except as such testing may be specifically authorized by the Administrator.

[65 FR 59947, Oct. 6, 2000, as amended at 70 FR 40432, July 13, 2005; 79 FR 23688, Apr. 28, 2014]

§ 86.004–28 Compliance with emission standards.

(a)–(b) [Reserved]

(c)(1) Paragraph (c) of this section applies to heavy-duty engines.

(2) The applicable exhaust emission standards (or family emission limits, as appropriate) for Otto-cycle engines and for diesel-cycle engines apply to the emissions of engines for their useful life.

(3) Since emission control efficiency generally decreases with the accumulation of service on the engine, deterioration factors will be used in combination with emission data engine test results as the basis for determining compliance with the standards.

(4)(i) Paragraph (c)(4) of this section describes the procedure for determining compliance of an engine with emission standards (or family emission limits, as appropriate), based on deterioration factors supplied by the manufacturer. Deterioration factors shall be established using applicable emissions test procedures. NO_X plus NMHC deterioration factors shall be established based on the sum of the pollutants. When establishing deterioration factors for NO_X plus NMHC, a negative deterioration (emissions decrease from the official exhaust emissions test result) for one pollutant may not offset deterioration of the other pollutant. Where negative deterioration occurs for NO_X and/or NMHC, the official exhaust emission test result shall be used for purposes of determining the NO_X plus NMHC deterioration factor.

(ii) Separate exhaust emission deterioration factors, determined from tests of engines, subsystems, or components conducted by the manufacturer, shall be supplied for each engine-system combination. For Otto-cycle engines, separate factors shall be established for transient NMHC (NMHCE), CO, NO_X. NO_X plus NMHC, and idle CO, for those engines utilizing aftertreatment technology (e.g., catalytic converters). For diesel-cycle engines, separate factors shall be established for transient NMHC (NMHCE), CO, NO_X. NO_X plus NMHC and exhaust particulate. For diesel-cycle smoke testing, separate factors shall also be established for the acceleration mode (designated as ''A''), the lugging mode (designated as ''B''), and peak opacity (designated as ''C'').

(iii)(A) Paragraphs (c)(4)(iii)(A) (*1*) and (*2*) of this section apply to Otto-cycle HDEs.

(*1*) Otto-cycle HDEs not utilizing aftertreatment technology (e.g., catalytic converters). For transient NMHC (NMHCE), CO, NO_X. the official exhaust emission results for each emission data engine at the selected test point shall

be adjusted by the addition of the appropriate deterioration factor. However, if the deterioration factor supplied by the manufacturer is less than zero, it shall be zero for the purposes of this paragraph.

(*2*) Otto-cycle HDEs utilizing aftertreatment technology (*e.g.*, catalytic converters). For transient NMHC (NMHCE), CO, NO_X. and for idle CO, the official exhaust emission results for each emission data engine at the selected test point shall be adjusted by multiplication by the appropriate deterioration factor, except as otherwise provided in paragraph (c)(4)(iii)(A)(*3*) of this section. The deterioration factor must be calculated by dividing the exhaust emissions at full useful life by the stabilized mileage emission level (reference § 86.096–26(c)(4), e.g., 125 hours). However, if the deterioration factor supplied by the manufacturer is less than one, it shall be one for purposes of this paragraph (c)(4)(iii)(A)(*2*).

(*3*) An Otto-cycle heavy-duty engine manufacturer who believes that a deterioration factor derived using the calculation methodology described in paragraph (c)(4)(iii)(4)(A)(*2*) of this section are significantly unrepresentative for one or more engine families (either too high or too low) may petition the Administrator to allow for the use of an additive rather than a multiplicative deterioration factor. This petition must include full rationale behind the request together with any supporting data or other evidence. Based on this or other information the Administration may allow for an alternative procedure. Any petition should be submitted in a timely manner, to allow adequate time for a thorough evaluation. Manufacturers using an additive deterioration factor under this paragraph (c)(4)(iii)(A)(*3*) must perform in-use verification testing to determine if the additive deterioration factor reasonably predicts actual in-use emissions. The plan for the in-use verification testing must be approved by the Administrator as part of the approval process described in this paragraph (c)(4)(iii)(4)(A)(*3*) prior to the use of the additive deterioration factor. The Administrator may consider the results of the in-use verification testing both in certification and in-use compliance programs.

(B) Paragraph (c)(4)(iii)(B) of this section applies to diesel-cycle HDEs.

(*1*) Additive deterioration factor for exhaust emissions. Except as specified in paragraph (c)(4)(iii)(B)(2) of this section, use an additive deterioration factor for exhaust emissions. An additive deterioration factor for a pollutant is the difference between exhaust emissions at the end of the useful life and exhaust emissions at the low-hour test point. In these cases, adjust the official emission results for each tested engine at the selected test point by adding the factor to the measured emissions. If the factor is less than zero, use zero. Additive deterioration factors must be specified to one more decimal place than the applicable standard.

(*2*) Multiplicative deterioration factor for exhaust emissions. Use a multiplicative deterioration factor if good engineering judgment calls for the deterioration factor for a pollutant to be the ratio of exhaust emissions at the end of the useful life to exhaust emissions at the low-hour test point. For example, if you use aftertreatment technology that controls emissions of a pollutant proportionally to engine-out emissions, it is often appropriate to use a multiplicative deterioration factor. Adjust the official emission results for each tested engine at the selected test point by multiplying the measured emissions by the deterioration factor. If the factor is less than one, use one. A multiplicative deterioration factor may not be appropriate in cases where testing variability is significantly greater than engine-to-engine variability. Multiplicative deterioration factors must be specified to one more significant figure than the applicable standard.

(*3*) Diesel-cycle HDEs only. For acceleration smoke (''A''), lugging smoke (''B''), and peak smoke (''C''), the official exhaust emission results for each emission data engine at the selected test point shall be adjusted by the addition of the appropriate deterioration factor. However, if the deterioration factor supplied by the manufacturer is less than zero, it shall be zero for the purposes of this paragraph.

(*4*) The emission values to compare with the standards (or family emission limits, as appropriate) shall be the adjusted emission values of paragraph (c)(4)(iii) of this section, rounded to the same number of significant figures as contained in the applicable standard in accordance with ASTM E 29–93a (as referenced in § 86.094–28 (a)(4)(i)(B)(2)(ii)), for each emission data engine.

(*5*) and (*6*) [Reserved]

(*7*) Every test engine of an engine family must comply with all applicable standards (or family emission limits, as appropriate), as determined in paragraph (c)(4)(iv) of this section, before any engine in that family will be certified.

(*8*) For the purposes of setting an NMHC plus NO_X certification level or FEL for a diesel-fueled engine family, the manufacturer may use one of the following options for the determination of NMHC for an engine family. The manufacturer must declare which option is used in its application for certification of that engine family.

(i) THC may be used in lieu of NMHC for the standards set forth in § 86.004–11.

(ii) The manufacturer may choose its own method to analyze methane with prior approval of the Administrator.

(iii) The manufacturer may assume that two percent of the measured THC is methane (NMHC = 0.98 × THC).

(d)(1) Paragraph (d) of this section applies to heavy-duty vehicles equipped with gasoline-fueled or methanol-fueled engines.

(2) The applicable evaporative emission standards in this subpart apply to the emissions of vehicles for their useful life.

(3)(i) For vehicles with a GVWR of up to 26,000 pounds, because it is expected that emission control efficiency will change during the useful life of the vehicle, an evaporative emission deterioration factor shall be determined from the testing described in § 86.098–23(b)(3) for each evaporative emission family-evaporative emission control system combination to indicate the evaporative emission control system deterioration during the useful life of the vehicle (minimum 50,000 miles). The factor shall be established to a minimum of two places to the right of the decimal.

(ii) For vehicles with a GVWR of greater than 26,000 pounds, because it is expected that emission control efficiency will change during the useful life of the vehicle, each manufacturer's statement as required in § 86.098–23(b)(4)(ii) shall include, in accordance with good engineering practice, consideration of control system deterioration.

(4) The evaporative emission test results, if any, shall be adjusted by the addition of the appropriate deterioration factor, provided that if the deterioration factor as computed in paragraph (d)(3) of this section is less than zero, that deterioration factor shall be zero for the purposes of this paragraph.

(5) The emission level to compare with the standard shall be the adjusted emission level of paragraph (d)(4) of this section. Before any emission value is compared with the standard, it shall be rounded, in accordance with ASTM E 29–93a (as referenced in § 86.094–28 (a)(4)(i)(B)(2)(ii)), to two significant figures. The rounded emission values may not exceed the standard.

(6) Every test vehicle of an evaporative emission family must comply with the evaporative emission standard, as determined in paragraph (d)(5) of this section, before any vehicle in that family may be certified.

(e) [Reserved]

(f)–(g) [Reserved]

(h) [Reserved]. For guidance see § 86.001–28.

(i) This paragraph (i) describes how to adjust emission results from model year 2020 and earlier heavy-duty engines equipped with exhaust aftertreatment to account for regeneration events. This provision only applies for engines equipped with emission controls that are regenerated on an infrequent basis. For the purpose of this paragraph (i), the term ''regeneration'' means an event during which emission levels change while the aftertreatment performance is being restored by design. Examples of regenerations are increasing exhaust gas temperature to remove sulfur from an adsorber or increasing exhaust gas temperature to oxidize PM in a trap. For the purpose of this paragraph (i), the term ''infrequent'' means having an expected frequency of less than once

per transient test cycle. Calculation and use of adjustment factors are described in paragraphs (i)(1) through (5) of this section. If your engine family includes engines with one or more AECDs for emergency vehicle applications approved under paragraph (4) of the definition of defeat device in § 86.004–2, do not consider additional regenerations resulting from those AECDs when calculating emission factors or frequencies under this paragraph (i).

(1) *Development of adjustment factors.* Manufacturers must develop separate pairs of adjustment factors (an upward adjustment factor and a downward adjustment factor) for each pollutant based on measured emission data and observed regeneration frequency. Adjustment factors may be carried-over to subsequent model years or carried-across to other engine families only where the Administrator determines that such carry-over or carry-across is consistent with good engineering judgment. Adjustment factors should generally apply to an entire engine family, but manufacturers may develop separate adjustment factors for different engine configurations within an engine family. All adjustment factors for regeneration are additive.

(2) *Calculation of adjustment factors.* The adjustment factors are calculated from the following parameters: the measured emissions from a test in which the regeneration occurs (EF_H), the measured emissions from a test in which the regeneration does not occur (EF_L), and the frequency of the regeneration event in terms of fraction of tests during which the regeneration occurs (F). The average emission rate (EF_A) is calculated as:

$$EF_A = (F)(EF_H) + (1 - F)(EF_L)$$

(i) The upward adjustment factor (UAF) is calculated as: $UAF = EF_A - EF_L$.

(ii) The downward adjustment factor (DAF) is calculated as: $DAF = EF_A - EF_H$.

(3) *Use of adjustment factors.* Upward adjustment factors are added to measured emission rates for all tests in which the regeneration does not occur. Downward adjustment factors are added to measured emission rates for all tests in which the regeneration occurs. The occurrence of the regeneration must be identified in a manner that is readily apparent during all testing. Where no regeneration is identified, the upward adjustment factor shall be applied.

(4) *Sample calculation.* If EF_L is 0.10 g/bhp-hr, EF_H is 0.50 g/bhp-hr, and F is 0.1 (i.e., the regeneration occurs once for each ten tests), then:

$$EF_A = (0.1)(0.5 \text{ g/bhp-hr}) + (1.0 - 0.1)(0.1 \text{ g/bhp-hr}) = 0.14 \text{ g/bhp-hr}$$

$$UAF = 0.14 \text{ g/bhp-hr} - 0.10 \text{ g/bhp-hr} = 0.04 \text{ g/bhp-hr}$$

$$DAF = 0.14 \text{ g/bhp-hr} - 0.50 \text{ g/bhp-hr} = -0.36 \text{ g/bhp-hr}$$

(5) *Options.* (i) A manufacturer may elect to omit adjustment factors for one or more of its engine families (or configurations) because the effect of the regeneration is small, or because it is not practical to identify when regenerations occur. In these cases, no upward or downward adjustment factor shall be added, and the manufacturer is liable for compliance with the emission standards for all tests, without regard to whether a regeneration occurs.

(ii) Upon request by the manufacturer, the Administrator may account for regeneration events differently than is provided in this paragraph (i). However, this option only applies for events that occur extremely infrequently, and which cannot be practically addressed using the adjustment factors described in this paragraph (i).

(j) For model year 2021 and later engines using aftertreatment technology with infrequent regeneration events that may occur during testing, take one of the following approaches to account for the emission impact of regeneration:

(1) You may use the calculation methodology described in 40 CFR 1065.680 to adjust measured emission results. Do this by developing an upward adjustment factor and a downward adjustment factor for each pollutant based on measured emission data and observed regeneration frequency as follows:

(i) Adjustment factors should generally apply to an entire engine family,

but you may develop separate adjustment factors for different configurations within an engine family. Use the adjustment factors from this section for all testing for the engine family.

(ii) You may use carryover or carryacross data to establish adjustment factors for an engine family as described in § 86.001–24(f), consistent with good engineering judgment.

(iii) Identify the value of *F* in each application for the certification for which it applies.

(2) You may ask us to approve an alternate methodology to account for regeneration events. We will generally limit approval to cases where your engines use aftertreatment technology with extremely infrequent regeneration and you are unable to apply the provisions of this section.

(3) You may choose to make no adjustments to measured emission results if you determine that regeneration does not significantly affect emission levels for an engine family (or configuration) or if it is not practical to identify when regeneration occurs. If you choose not to make adjustments under paragraph (j)(1) or (2) of this section, your engines must meet emission standards for all testing, without regard to regeneration.

[61 FR 54890, Oct. 22, 1996, as amended at 62 FR 54726, Oct. 21, 1997; 65 FR 59948, Oct. 6, 2000; 66 FR 5159, Jan. 18, 2001; 71 FR 31486, Aug. 30, 2006; 77 FR 34145, June 8, 2012; 79 FR 23688, Apr. 28, 2014; 81 FR 73974, Oct. 25, 2016]

§ 86.004–38 Maintenance instructions.

(a) The manufacturer shall furnish or cause to be furnished to the purchaser of each new motor vehicle (or motor vehicle engine) subject to the standards prescribed in § 86.099–8, § 86.004–9, § 86.004–10, or § 86.004–11, as applicable, written instructions for the proper maintenance and use of the vehicle (or engine), by the purchaser consistent with the provisions of § 86.004–25, which establishes what scheduled maintenance the Administrator approves as being reasonable and necessary.

(1) The maintenance instructions required by this section shall be in clear, and to the extent practicable, nontechnical language.

(2) The maintenance instructions required by this section shall contain a general description of the documentation which the manufacturer will require from the ultimate purchaser or any subsequent purchaser as evidence of compliance with the instructions.

(b) Instructions provided to purchasers under paragraph (a) of this section shall specify the performance of all scheduled maintenance performed by the manufacturer on certification durability vehicles and, in cases where the manufacturer performs less maintenance on certification durability vehicles than the allowed limit, may specify the performance of any scheduled maintenance allowed under § 86.004–25.

(c) Scheduled emission-related maintenance in addition to that performed under § 86.004–25(b) may only be recommended to offset the effects of abnormal in-use operating conditions, except as provided in paragraph (d) of this section. The manufacturer shall be required to demonstrate, subject to the approval of the Administrator, that such maintenance is reasonable and technologically necessary to assure the proper functioning of the emission control system. Such additional recommended maintenance shall be clearly differentiated, in a form approved by the Administrator, from that approved under § 86.004–25(b).

(d) Inspections of emission-related parts or systems with instructions to replace, repair, clean, or adjust the parts or systems if necessary, are not considered to be items of scheduled maintenance which insure the proper functioning of the emission control system. Such inspections, and any recommended maintenance beyond that approved by the Administrator as reasonable and necessary under paragraphs (a), (b), and (c) of this section, may be included in the written instructions furnished to vehicle owners under paragraph (a) of this section: Provided, That such instructions clearly state, in a form approved by the Administrator, that the owner need not perform such inspections or recommended maintenance in order to maintain the emissions defect and emissions performance warranty or manufacturer recall liability.

(e) The manufacturer may choose to include in such instructions an explanation of any distinction between the useful life specified on the label, and the emissions defect and emissions performance warranty period. The explanation must clearly state that the useful life period specified on the label represents the average period of use up to retirement or rebuild for the engine family represented by the engine used in the vehicle. An explanation of how the actual useful lives of engines used in various applications are expected to differ from the average useful life may be included. The explanation(s) shall be in clear, non-technical language that is understandable to the ultimate purchaser.

(f) If approved by the Administrator, the instructions provided to purchasers under paragraph (a) of this section shall indicate what adjustments or modifications, if any, are necessary to allow the vehicle to meet applicable emission standards at elevations above 4,000 feet, or at elevations of 4,000 feet or less.

(g) [Reserved]

(h) The manufacturer shall furnish or cause to be furnished to the purchaser of each new motor engine subject to the standards prescribed in § 86.004–10 or § 86.004–11, as applicable, the following:

(1) Instructions for all maintenance needed after the end of the useful life of the engine for critical emissions-related components as provided in § 86.004–25(b), including recommended practices for diagnosis, cleaning, adjustment, repair, and replacement of the component (or a statement that such component is maintenance free for the life of the engine) and instructions for accessing and responding to any emissions-related diagnostic codes that may be stored in on-board monitoring systems;

(2) A copy of the engine rebuild provisions contained in § 86.004–40.

(i) For each new diesel-fueled engine subject to the standards prescribed in § 86.007–11, as applicable, the manufacturer shall furnish or cause to be furnished to the ultimate purchaser a statement that ''This engine must be operated only with ultra low-sulfur diesel fuel (meeting EPA specifications for highway diesel fuel, including a 15 ppm sulfur cap).''

[62 FR 54728, Oct. 21, 1997, as amended at 68 FR 38455, June 27, 2003; 79 FR 23688, Apr. 28, 2014]

§ 86.004–40 Heavy-duty engine rebuilding practices.

The provisions of this section are applicable to heavy-duty engines subject to model year 2004 or later standards and are applicable to the process of engine rebuilding (or rebuilding a portion of an engine or engine system). The process of engine rebuilding generally includes disassembly, replacement of multiple parts due to wear, and reassembly, and also may include the removal of the engine from the vehicle and other acts associated with rebuilding an engine. Any deviation from the provisions contained in this section is a prohibited act under section 203(a)(3) of the Clean Air Act (42 U.S.C. 7522(a)(3)).

(a) When rebuilding an engine, portions of an engine, or an engine system, there must be a reasonable technical basis for knowing that the resultant engine is equivalent, from an emissions standpoint, to a certified configuration (i.e., tolerances, calibrations, specifications) and the model year(s) of the resulting engine configuration must be identified. A reasonable basis would exist if:

(1) Parts installed, whether the parts are new, used, or rebuilt, are such that a person familiar with the design and function of motor vehicle engines would reasonably believe that the parts perform the same function with respect to emissions control as the original parts; and

(2) Any parameter adjustment or design element change is made only:

(i) In accordance with the original engine manufacturer's instructions; or

(ii) Where data or other reasonable technical basis exists that such parameter adjustment or design element change, when performed on the engine or similar engines, is not expected to adversely affect in-use emissions.

(b) When an engine is being rebuilt and remains installed or is reinstalled in the same vehicle, it must be rebuilt to a configuration of the same or later model year as the original engine.

When an engine is being replaced, the replacement engine must be an engine of (or rebuilt to) a configuration of the same or later model year as the original engine.

(c) At time of rebuild, emissions-related codes or signals from on-board monitoring systems may not be erased or reset without diagnosing and responding appropriately to the diagnostic codes, regardless of whether the systems are installed to satisfy requirements in § 86.004–25 or for other reasons and regardless of form or interface. Diagnostic systems must be free of all such codes when the rebuilt engine is returned to service. Such signals may not be rendered inoperative during the rebuilding process.

(d) When conducting a rebuild without removing the engine from the vehicle, or during the installation of a rebuilt engine, all critical emissions-related components listed in § 86.004–25(b) not otherwise addressed by paragraphs (a) through (c) of this section must be checked and cleaned, adjusted, repaired, or replaced as necessary, following manufacturer recommended practices.

(e) Records shall be kept by parties conducting activities included in paragraphs (a) through (d) of this section. The records shall include at minimum the mileage and/or hours at time of rebuild, a listing of work performed on the engine and emissions-related control components including a listing of parts and components used, engine parameter adjustments, emissions-related codes or signals responded to and reset, and work performed under paragraph (d) of this section.

(1) Parties may keep records in whatever format or system they choose as long as the records are understandable to an EPA enforcement officer or can be otherwise provided to an EPA enforcement officer in an understandable format when requested.

(2) Parties are not required to keep records of information that is not reasonably available through normal business practices including information on activities not conducted by themselves or information that they cannot reasonably access.

(3) Parties may keep records of their rebuilding practices for an engine family rather than on each individual engine rebuilt in cases where those rebuild practices are followed routinely.

(4) Records must be kept for a minimum of two years after the engine is rebuilt.

[62 FR 54729, Oct. 21, 1997, as amended at 66 FR 5160, Jan. 18, 2001]

§ 86.005–1 General applicability.

Section 86.005–1 includes text that specifies requirements that differ from § 86.001–1. Where a paragraph in § 86.001–1 is identical and applicable to § 86.005–1, this may be indicated by specifying the corresponding paragraph and the statement ''[Reserved]. For guidance see § 86.001–1.''.

(a) *Applicability*. The provisions of this subpart generally apply to 2005 and later model year new Otto-cycle heavy-duty engines used in incomplete vehicles and vehicles above 14,000 pounds GVWR and 2005 and later model year new diesel-cycle heavy-duty engines. In cases where a provision applies only to a certain vehicle group based on its model year, vehicle class, motor fuel, engine type, or other distinguishing characteristics, the limited applicability is cited in the appropriate section or paragraph. The provisions of this subpart continue to generally apply to 2000 and earlier model year new Otto-cycle and diesel-cycle light-duty vehicles, 2000 and earlier model year new Otto-cycle and diesel-cycle light-duty trucks, and 2004 and earlier model year new Otto-cycle complete heavy-duty vehicles at or below 14,000 pounds GVWR. Provisions generally applicable to 2001 and later model year new Otto-cycle and diesel-cycle light-duty vehicles, 2001 and later model year new Otto-cycle and diesel-cycle light-duty trucks, and 2005 and later model year Otto-cycle complete heavy-duty vehicles at or below 14,000 pounds GVWR are located in subpart S of this part.

(b) *Optional applicability*. (1) A manufacturer may request to certify any 2003 or 2004 model year heavy-duty vehicle of 14,000 pounds Gross Vehicle Weight Rating or less in accordance with the light-duty truck provisions located in subpart S of this part. Heavy-duty engine or vehicle provisions of this subpart A do not apply to such a

vehicle. This option is not available in the 2003 model year for manufacturers choosing Otto-cycle HDE option 1 in paragraph (c)(1) of this section, or in the 2004 model year for manufacturers choosing Otto-cycle HDE option 2 in paragraph (c)(2) of this section.

(2) For 2005 and later model years, a manufacturer may request to certify any incomplete Otto-cycle heavy-duty vehicle of 14,000 pounds Gross Vehicle Weight Rating or less in accordance with the provisions for Otto-cycle complete heavy-duty vehicles located in subpart S of this part. Heavy-duty engine or heavy-duty vehicle provisions of this subpart A do not apply to such a vehicle. This option is available starting with the 2003 model year to manufacturers choosing Otto-cycle HDE option 1 in paragraph (c)(1) of this section. This option is available starting with the 2004 model year to manufacturers choosing Otto-cycle HDE option 2 in paragraph (c)(1) of this section.

(c) *Otto-cycle heavy-duty engines and vehicles*. The manufacturer must select one of the three options for Otto-cycle heavy-duty engines and vehicles in paragraphs (c)(1) through (c)(3) of this section. The emission standards and other requirements that apply under a given option shall apply to all Otto-cycle heavy-duty engines and vehicles certified by the manufacturer (e.g., a manufacturer may not select one option for certain engine families and the other option for other engine families). The requirements under each option shall remain effective, once selected, for subsequent model years, until superceded or otherwise revised by the Administrator (e.g., a manufacturer may not select one option prior to the 2004 model year and change to another option in the 2006 model year). The complete requirements under each option are contained in subparts A and S of this part.

(1) *Otto-cycle HDE Option 1*. The following requirements apply to Otto-cycle heavy-duty engines and vehicles certified by manufacturers selecting this option:

(i) Emission standards for 2003 and later model year Otto-cycle heavy-duty engines, according to the provisions of § 86.005–10(f)(1).

(ii) Emission standards for 2003 and later model year Otto-cycle complete heavy-duty vehicles, according to the provisions of § 86.1816–05, except that, for 2003 through 2006 model year Otto-cycle complete heavy-duty vehicles, manufacturers may optionally comply with the standards in either 86.005–10 or 86.1816–05.

(iii) Averaging, banking, and trading provisions that allow transfer of credits between a manufacturer's complete vehicle averaging set and their heavy-duty Otto-cycle engine averaging set, according to the provisions of § 86.1817–05(o).

(iv) On-board diagnostics requirements effective starting with the 2004 model year for Otto-cycle engines and complete vehicles, according to the provisions of §§ 86.005–17 and 86.1806–05.

(v) Refueling emissions requirements effective starting with the 2004 model year for Otto-cycle complete vehicles, according to the provisions of §§ 86.1810–01 and 86.1816–05.

(2) *Otto-cycle HDE Option 2*. The following requirements apply to Otto-cycle heavy-duty engines and vehicles certified by manufacturers selecting this option:

(i) Emission standards for 2004 and later model year Otto-cycle heavy-duty engines, according to the provisions of § 86.005–10(f)(2).

(ii) Emission standards for 2004 and later model year Otto-cycle complete heavy-duty vehicles, according to the provisions of § 86.1816–05.

(iii) Averaging, banking, and trading provisions that allow transfer of credits between a manufacturer's complete vehicle averaging set and their heavy-duty Otto-cycle engine averaging set, according to the provisions of § 86.1817–05(o).

(iv) On-board diagnostics requirements effective starting with the 2004 model year for Otto-cycle engines and complete vehicles, according to the provisions of §§ 86.005–17 and 86.1806–05.

(v) Refueling emissions requirements effective starting with the 2004 model year for Otto-cycle complete vehicles, according to the provisions of §§ 86.1810–01 and 86.1816–05.

(3) *Otto-cycle HDE Option 3*. The following requirements apply to Otto-cycle heavy-duty engines and vehicles

certified by manufacturers that do not select one of the options for 2003 or 2004 model year compliance in paragraph (c)(1) or (c)(2) of this section:

(i) Emission standards for 2005 and later model year Otto-cycle heavy-duty engines, according to the provisions of § 86.005–10.

(ii) Emission standards for 2005 and later model year Otto-cycle complete heavy-duty vehicles, according to the provisions of § 86.1816–05.

(iii) On-board diagnostics requirements effective starting with the 2005 model year for Otto-cycle engines and complete vehicles, according to the provisions of §§ 86.005–17 and 86.1806–05.

(iv) Refueling emissions requirements effective starting with the 2005 model year for Otto-cycle complete vehicles, according to the provisions of §§ 86.1810–01 and 86.1816–05.

(v) Manufacturers selecting this option may exempt 2005 model year Otto-cycle heavy-duty engines and vehicles whose model year commences before July 31, 2004 from the requirements in paragraphs (c)(3)(i) through (iv) of this section.

(vi) For 2005 model year engines or vehicles exempted under paragraph (c)(3)(v) of this section, a manufacturer shall certify such Otto-cycle heavy-duty engines and vehicles to all requirements in this subpart applicable to 2004 model year Otto-cycle heavy-duty engines. The averaging, banking, and trading provisions contained in § 86.000–15 remain effective for these engines.

(d) [Reserved]

(e)–(f) [Reserved]. For guidance see § 86.001–1.

[65 FR 59949, Oct. 6, 2000]

§ 86.005–10 Emission standards for 2005 and later model year Otto-cycle heavy-duty engines and vehicles.

Section 86.005–10 includes text that specifies requirements that differ from § 86.099–10. Where a paragraph in § 86.099–10 is identical and applicable to § 86.005–10, this may be indicated by specifying the corresponding paragraph and the statement ''[Reserved]. For guidance see § 86.099–10.''

(a)(1) Exhaust emissions from new 2005 and later model year Otto-cycle HDEs, except for Otto-cycle HDEs subject to the alternative standards in paragraph (f) of this section, shall not exceed:

(i)(A) *Oxides of Nitrogen plus Non-methane Hydrocarbons (NO_X + NMHC) for engines fueled with either gasoline, natural gas, or liquefied petroleum gas.* 1.0 grams per brake horsepower-hour (0.37 grams per megajoule).

(B) *Oxides of Nitrogen plus Non-methane Hydrocarbon Equivalent (NO_X + NMHCE) for engines fueled with methanol.* 1.0 grams per brake horsepower-hour (0.37 grams per megajoule).

(C) A manufacturer may elect to include any or all of its Otto-cycle HDE families in any or all of the emissions ABT programs for HDEs, within the restrictions described in § 86.098–15. If the manufacturer elects to include engine families in any of these programs, the NO_X plus NMHC (or NO_X plus NMHCE for methanol-fueled engines) FELs may not exceed 4.5 grams per brake horsepower-hour (1.7 grams per megajoule). This ceiling value applies whether credits for the family are derived from averaging, banking, or trading programs.

(ii)(A) *Carbon monoxide for engines intended for use in all vehicles, except as provided in paragraph (a)(3) of this section.* 14.4 grams per brake horsepower-hour (5.36 grams per megajoule), as measured under transient operating conditions.

(B) *Carbon monoxide for engines intended for use only in vehicles with a Gross Vehicle Weight Rating of greater than 14,000 pounds.* 37.1 grams per brake horsepower-hour (13.8 grams per megajoule), as measured under transient operating conditions.

(C) *Idle carbon monoxide.* For all Otto-cycle HDEs utilizing aftertreatment technology, and not certified to the on-board diagnostics requirements of § 86.005–17: 0.50 percent of exhaust gas flow at curb idle.

(2) The standards set forth in paragraphs (a)(1) and (f) of this section refer to the exhaust emitted over the operating schedule set forth in paragraph (f)(1) of appendix I to this part, and measured and calculated in accordance with the procedures set forth in subpart N or P of this part.

(3)(i) A manufacturer may certify one or more Otto-cycle HDE configurations intended for use in all vehicles to the emission standard set forth in paragraph (a)(1)(ii)(B) of this section: Provided, that the total model year sales of such configuration(s), segregated by fuel type, being certified to the emission standard in paragraph (a)(1)(ii)(B) of this section represent no more than five percent of total model year sales of each fuel type Otto-cycle HDE intended for use in vehicles with a Gross Vehicle Weight Rating of up to 14,000 pounds by the manufacturer.

(ii) The configurations certified to the emission standards of paragraph (a)(1)(ii)(B) of this section under the provisions of paragraph (a)(3)(i) of this section shall still be required to meet the evaporative emission standards set forth in § 86.099–10(b)(1)(i), (b)(2)(i) and (b)(3)(i).

(4) The manufacturer may exempt 2005 model year HDE engine families whose model year begins before July, 31, 2004 from the requirements in this paragraph (a). Exempted engine families shall be subject to the requirements in § 86.099–10.

(5) For certification purposes, where the applicable California evaporative emission standard is as stringent or more stringent than the applicable federal evaporative emission standard, the Administrator may accept California certification test data indicating compliance with the California standard to demonstrate compliance with the appropriate federal certification evaporative emission standard. The Administrator may require the manufacturer to provide comparative test data which clearly demonstrates that a vehicle meeting the California evaporative standard (when tested under California test conditions/test procedures) will also meet the appropriate federal evaporative emission standard when tested under federal test conditions/test procedures described in this part 86.

(b) [Reserved]. For guidance see § 86.099–10.

(c) No crankcase emissions shall be discharged into the ambient atmosphere from any new 1998 or later model year Otto-cycle heavy-duty engine.

(d) Every manufacturer of new motor vehicle engines subject to the standards prescribed in this section shall, prior to taking any of the actions specified in section 203(a)(1) of the Act, test or cause to be tested motor vehicle engines in accordance with applicable procedures in subpart N or P of this part to ascertain that such test engines meet the requirements of this section.

(e) [Reserved]. For guidance see § 86.099–10.

(f) *Alternative exhaust emission standards.* In lieu of the exhaust emission standards in paragraph (a)(1)(i)(A) or (B) of this section, the manufacturer may select the standards and provisions in either paragraph (f)(1) or (f)(2) of this section.

(1) *Otto-cycle HDE Option 1.* The alternative exhaust emission standards in this paragraph (f)(1) shall apply to new 2003 through 2007 model year Otto-cycle HDEs and, at the manufacturers option, to new 2003 through 2006 model year Otto-cycle complete heavy-duty vehicles less than or equal to 14,000 pounds GVWR

(i) *Oxides of Nitrogen plus Non-methane Hydrocarbons (NO_X + NMHC) for engines fueled with either gasoline, natural gas, or liquefied petroleum gas.* 1.5 grams per brake horsepower-hour (0.55 grams per megajoule).

(ii) *Oxides of Nitrogen plus Non-methane Hydrocarbon Equivalent (NO_X + NMHCE) for engines fueled with methanol.* 1.5 grams per brake horsepower-hour (0.55 grams per megajoule).

(2) *Otto-cycle HDE Option 2.* The alternative exhaust emission standards in this paragraph (f)(2) shall apply to new 2004 through 2007 model year Otto-cycle HDEs.

(i) *Oxides of Nitrogen plus Non-methane Hydrocarbons ($NO,_X$ + NMHC) for engines fueled with either gasoline, natural gas, or liquefied petroleum gas.* 1.5 grams per brake horsepower-hour (0.55 grams per megajoule).

(ii) *Oxides of Nitrogen plus Non-methane Hydrocarbon Equivalent (NO_X + NMHCE) for engines fueled with methanol.* 1.5 grams per brake horsepower-hour (0.55 grams per megajoule).

[65 FR 59950, Oct. 6, 2000, as amended at 66 FR 5160, Jan. 18, 2001; 70 FR 72927, Dec. 8, 2005; 79 FR 23688, Apr. 28, 2014]

§ 86.007–11 Emission standards and supplemental requirements for 2007 and later model year diesel heavy-duty engines and vehicles.

This section applies to new 2007 and later model year diesel heavy-duty engines and vehicles. Starting in model year 2021, this section also applies to all heavy HDE, regardless of fuel or combustion cycle (see 40 CFR 1036.140(a) and 1036.150(c)). Section 86.007–11 includes text that specifies requirements that differ from § 86.004–11. Where a paragraph in § 86.004–11 is identical and applicable to § 86.007–11, this may be indicated by specifying the corresponding paragraph and the statement ''[Reserved]. For guidance see § 86.004–11.''

(a)(1) Exhaust emissions from new 2007 and later model year diesel HDEs shall not exceed the following:

(i) *Oxides of Nitrogen (NO_X).* (A) 0.20 grams per brake horsepower-hour (0.075 grams per megajoule).

(B) A manufacturer may elect to include any or all of its diesel HDE families in any or all of the NO_X and NO_X plus NMHC emissions ABT programs for HDEs, within the restrictions described in § 86.007–15 or § 86.004–15. If the manufacturer elects to include engine families in any of these programs, the NO_X FELs may not exceed the following FEL caps: 2.00 grams per brake horsepower-hour (0.75 grams per megajoule) for model years before 2010; 0.50 grams per brake horsepower-hour (0.19 grams per megajoule) for model years 2010 and later. This ceiling value applies whether credits for the family are derived from averaging, banking, or trading programs.

(ii)(A) *Nonmethane hydrocarbon (NMHC) for engines fueled with diesel fuel.* 0.14 grams per brake horsepower-hour (0.052 grams per megajoule).

(B) *Nonmethane-nonethane hydrocarbon (NMNEHC) for engines fueled with natural gas or liquefied petroleum gas.* 0.14 grams per brake horsepower-hour (0.052 grams per megajoule).

(C) *Nonmethane hydrocarbon equivalent (NMHCE) for engines fueled with methanol.* 0.14 grams per brake horsepower-hour (0.052 grams per megajoule).

(iii) *Carbon monoxide.* 15.5 grams per brake horsepower-hour (5.77 grams per megajoule).

(iv) *Particulate.* (A) 0.01 grams per brake horsepower-hour (0.0037 grams per megajoule).

(B) A manufacturer may elect to include any or all of its diesel HDE families in any or all of the particulate ABT programs for HDEs, within the restrictions described in § 86.007–15 or other applicable sections. If the manufacturer elects to include engine families in any of these programs, the particulate FEL may not exceed 0.02 grams per brake horsepower-hour (0.0075 grams per megajoule).

(2) The standards set forth in paragraph (a)(1) of this section refer to the exhaust emitted over the duty cycle specified in paragraphs (a)(2)(i) through (iii) of this section, where exhaust emissions are measured and calculated as specified in paragraphs (a)(2)(iv) and (v) of this section in accordance with the procedures set forth in subpart N of this part, except as noted in § 86.007–23(c)(2):

(i) Perform the test interval set forth in paragraph (f)(2) of appendix I of this part with a cold-start according to 40 CFR part 1065, subpart F. This is the cold-start test interval.

(ii) Shut down the engine after completing the test interval and allow 20±1 minutes to elapse. This is the hot soak.

(iii) Repeat the test interval. This is the hot-start test interval.

(iv) Calculate the total emission mass of each constituent, m, and the total work, W, over each test interval according to 40 CFR 1065.650.

(v) Determine your engine's brake-specific emissions using the following calculation, which weights the emissions from the cold-start and hot-start test intervals:

$$\text{brake-specific emissions} = \frac{m_{\text{cold-start}} + 6 \cdot m_{\text{hot-start}}}{W_{\text{cold-start}} + 6 \cdot W_{\text{hot-start}}}$$

(3) *SET* (i) Exhaust emissions, as determined under § 86.1360–2007(b) pertaining to the supplemental emission test cycle, for each regulated pollutant shall not exceed 1.0 times the applicable emission standards or FELs specified in paragraph (a)(1) of this section.

(ii) For engines not having a NO_X FEL less than1.5 g/bhp-hr, gaseous exhaust emissions shall not exceed the steady-state interpolated values determined by the Maximum Allowable Emission Limits (for the corresponding speed and load), as determined under § 86.1360–2007(f), when the engine is operated in the steady-state control area defined under § 86.1360–2007(d).

(4) *NTE* (i)(A) The brake-specific exhaust NMHC or NO_X emissions in g/bhp-hr, as determined under § 86.1370–2007 pertaining to the not-to-exceed test procedures, shall not exceed 1.5 times the applicable NMHC or NO_X emission standards or FELs specified in paragraph (a)(1) of this section, during engine and vehicle operation specified in paragraph (a)(4)(ii) of this section except as noted in paragraph (a)(4)(iii) of this section.

(B) For engines not having a NO_X FEL less than1.50 g/bhp-hr, the brake-specific NO_X and NMHC exhaust emissions in g/bhp-hr, as determined under § 86.1370–2007 pertaining to the not-to-exceed test procedures, shall not exceed 1.25 times the applicable emission standards or FELs specified in paragraph (a)(1) of this section (or of § 86.004–11, as allowed by paragraph (g) of this section), during engine and vehicle operation specified in paragraph (a)(4)(ii) of this section except as noted in paragraph (a)(4)(iii) of this section.

(C) The brake-specific exhaust PM emissions in g/bhp-hr, as determined under § 86.1370–2007 pertaining to the not-to-exceed test procedures, shall not exceed 1.5 times the applicable PM emission standards or FEL (for FELs above the standard only) specified in paragraph (a)(1) of this section, during engine and vehicle operation specified in paragraph (a)(4)(ii) of this section except as noted in paragraph (a)(4)(iii) of this section.

(D) The brake-specific exhaust CO emissions in g/bhp-hr, as determined under § 86.1370–2007 pertaining to the not-to-exceed test procedures, shall not exceed 1.25 times the applicable CO emission standards or FEL specified in paragraph (a)(1) of this section, during engine and vehicle operation specified in paragraph (a)(4)(ii) of this section except as noted in paragraph (a)(4)(iii) of this section.

(ii) For each engine family, the not-to-exceed emission limits must apply during one of the following two ambient operating regions:

(A) The not-to-exceed limits apply for all altitudes less than or equal to 5,500 feet above sea-level, during all ambient conditions (temperature and humidity). Temperature and humidity ranges for which correction factors are allowed are specified in § 86.1370–2007(e); or

(B)(*1*) The not-to-exceed emission limits apply at all altitudes less than or equal to 5,500 feet above sea-level, for temperatures less than or equal to the temperature determined by the following equation at the specified altitude:

$$T = -0.00254 \times A + 100$$

Where:

T = ambient air temperature in degrees Fahrenheit.

A = altitude in feet above sea-level (A is negative for altitudes below sea-level).

(*2*) Temperature and humidity ranges for which correction factors are allowed are specified in § 86.1370–2007(e);

(iii) For engines equipped with exhaust gas recirculation, the not-to-exceed emission limits specified in paragraph (a)(4)(i) of this section do not apply to engine or vehicle operation during cold operating conditions as specified in § 86.1370–2007(f).

(iv) *Deficiencies for NTE emission standards.* (A) For model years 2007 through 2009, upon application by the manufacturer, the Administrator may accept a HDDE as compliant with the NTE standards even though specific requirements are not fully met. Such compliances without meeting specific requirements, or deficiencies, will be granted only if compliance would be infeasible or unreasonable considering such factors as, but not limited to: Technical feasibility of the given hardware and lead time and production cycles including phase-in or phase-out of

engines or vehicle designs and programmed upgrades of computers. Deficiencies will be approved on an engine model and/or horsepower rating basis within an engine family, and each approval is applicable for a single model year. A manufacturer's application must include a description of the auxiliary emission control device(s) which will be used to maintain emissions to the lowest practical level, considering the deficiency being requested, if applicable. An application for a deficiency must be made during the certification process; no deficiency will be granted to retroactively cover engines already certified.

(B) Unmet requirements should not be carried over from the previous model year except where unreasonable hardware or software modifications would be necessary to correct the deficiency, and the manufacturer has demonstrated an acceptable level of effort toward compliance as determined by the Administrator. The NTE deficiency should only be seen as an allowance for minor deviations from the NTE requirements. The NTE deficiency provisions allow a manufacturer to apply for relief from the NTE emission requirements under limited conditions. EPA expects that manufacturers should have the necessary functioning emission control hardware in place to comply with the NTE.

(C) For model years 2010 through 2013, the Administrator may allow up to three deficiencies per engine family. The provisions of paragraphs (a)(4)(iv)(A) and (B) of this section apply for deficiencies allowed by this paragraph (a)(4)(iv)(C). In determining whether to allow the additional deficiencies, the Administrator may consider any relevant factors, including the factors identified in paragraph (a)(4)(iv)(A) of this section. If additional deficiencies are approved, the Administrator may set any additional conditions that he/she determines to be appropriate.

(v) The emission limits specified in paragraphs (a)(3) and (a)(4) of this section shall be rounded to the same number of significant figures as the applicable standards in paragraph (a)(1) of this section using ASTM E29–93a (Incorporated by reference at § 86.1).

(vi) Manufacturers are not required to provide engine information exclusively related to in-use testing as part of initial certification. However, upon request from EPA the manufacturers must provide the information which clearly identifies parameters defining all NTE deficiencies described under paragraph (a)(4)(iv) of this section and parameters defining all NTE limited testing regions described under § 86.1370–2007(b)(6) and (7) that are requested. When requested, deficiencies and limited testing regions must be reported for all engine families and power ratings in English with sufficient detail for us to determine if a particular deficiency or limited testing region will be encountered in the emission test data from the portable emission-sampling equipment and field-testing procedures referenced in § 86.1375. Such information is to be provided within 60 days of the request from EPA.

(b)(1) introductory text through (b)(1)(iii) [Reserved]. For guidance see § 86.004–11.

(b)(1)(iv) Operation within the NTE zone (defined in § 86.1370–2007) must comply with a filter smoke number of 1.0 under steady-state operation, or the following alternate opacity limits:

(A) A 30 second transient test average opacity limit of 4% for a 5 inch path; and

(B) A 10 second steady state test average opacity limit of 4% for a 5 inch path.

(2)(i) The standards set forth in § 86.004–11 (b)(1)(i)–(iii) refer to exhaust smoke emissions generated under the conditions set forth in subpart I of this part and measured and calculated in accordance with those procedures.

(ii) The standards set forth in paragraph (b)(1)(iv) of this section refer to exhaust smoke emissions generated under the conditions set forth in § 86.1370–2007 and calculated in accordance with the procedures set forth in § 86.1372–2007.

(b)(3) and (b)(4) [Reserved]. For guidance see § 86.004–11.

(c) No crankcase emissions shall be discharged directly into the ambient atmosphere from any new 2007 or later model year diesel HDE, with the following exception: HDEs equipped with

turbochargers, pumps, blowers, or superchargers for air induction may discharge crankcase emissions to the ambient atmosphere if the emissions are added to the exhaust emissions (either physically or mathematically) during all emission testing. Manufacturers taking advantage of this exception must manufacture the engines so that all crankcase emission can be routed into a dilution tunnel (or other sampling system approved in advance by the Administrator), and must account for deterioration in crankcase emissions when determining exhaust deterioration factors. For the purpose of this paragraph (c), crankcase emissions that are routed to the exhaust upstream of exhaust aftertreatment during all operation are not considered to be ''discharged directly into the ambient atmosphere.''

(d) Every manufacturer of new motor vehicle engines subject to the standards prescribed in this section shall, prior to taking any of the actions specified in section 203(a)(1) of the Act, test or cause to be tested motor vehicle engines in accordance with applicable procedures in subpart I or N of this part to ascertain that such test engines meet the requirements of paragraphs (a), (b), (c), and (d) of this section.

(e) [Reserved]. For guidance see § 86.004–11.

(f) (1) Model year 2007 and later diesel-fueled heavy-duty engines and vehicles for sale in Guam, American Samoa, or the Commonwealth of the Northern Mariana Islands shall be subject to the same standards and requirements as apply to 2006 model year diesel heavy-duty engines and vehicles, but only if the vehicle or engine bears a permanently affixed label stating:

THIS ENGINE (or VEHICLE, as applicable) CONFORMS TO US EPA EMISSION STANDARDS APPLICABLE TO MODEL YEAR 2006. THIS ENGINE (or VEHICLE, as applicable) DOES NOT CONFORM TO US EPA EMISSION REQUIREMENTS IN EFFECT AT TIME OF PRODUCTION AND MAY NOT BE IMPORTED INTO THE UNITED STATES OR ANY TERRITORY OF THE UNITED STATES EXCEPT GUAM, AMERICAN SAMOA, OR THE COMMONWEALTH OF THE NORTHERN MARIANA ISLANDS.

(2) The importation or sale of such a vehicle or engine for use at any location U.S. other than Guam, American Samoa, or the Commonwealth of the Northern Mariana Islands shall be considered a violation of section 203(a)(1) of the Clean Air Act. In addition, vehicles or vehicle engines subject to this exemption may not subsequently be imported or sold into any state or territory of the United States other than Guam, American Samoa, or Commonwealth of the Northern Mariana Islands.

(g) Model year 2018 and later engines at or above 56 kW that will be installed in specialty vehicles as allowed by 40 CFR 1037.605 may meet alternate emission standards as follows:

(1) The engines must be of a configuration that is identical to one that is certified under 40 CFR part 1039, and meet the following additional standards using the same duty cycles that apply under 40 CFR part 1039:

(i) The engines must be certified with a Family Emission Limit for PM of 0.020 g/kW-hr.

(ii) Diesel-fueled engines using selective catalytic reduction must meet an emission standard of 0.1 g/kW-hr for N_2O.

(2) Except as specified in this paragraph (g), engines certified under this paragraph (g) must meet all the requirements that apply under 40 CFR part 1039 instead of the comparable provisions in this subpart A. Before shipping engines under this section, you must have written assurance from the vehicle manufacturers that they need a certain number of exempted engines under this section. In your annual production report under 40 CFR 1039.250, count these engines separately and identify the vehicle manufacturers that will be installing them. Treat these engines as part of the corresponding engine family under 40 CFR part 1039 for compliance purposes such as selective enforcement audits, in-use testing, defect reporting, and recall.

(3) The engines must be labeled as described in § 86.095–35, with the following statement instead of the one specified in § 86.095–35(a)(3)(iii)(H): ''This engine conforms to alternate standards for specialty vehicles under 40 CFR 86.007–11(g)''. Engines certified under this paragraph (g) may not have the label specified for nonroad engines in 40 CFR

part 1039 or any other label identifying them as nonroad engines.

(4) In a separate application for a certificate of conformity, identify the corresponding nonroad engine family, describe the label required under this paragraph (g), state that you meet applicable diagnostic requirements under 40 CFR part 1039, and identify your projected U.S.-directed production volume.

(5) No additional certification fee applies for engines certified under this paragraph (g).

(6) Engines certified under this paragraph (g) may not generate or use emission credits under this part or under 40 CFR part 1039. The vehicles in which these engines are installed may generate or use emission credits as described in 40 CFR part 1037.

(7) Engines may instead meet standards for heavy-duty highway engines in California, as demonstrated by an Executive Order issued by the California Air Resources Board.

(h)(1) For model years prior to 2012, for purposes of determining compliance after title or custody has transferred to the ultimate purchaser, for engines having a NO_X FEL no higher than 1.30 g/bhp-hr, the applicable compliance limit shall be determined by adding the applicable adjustment from paragraph (h)(2) of this section to the otherwise applicable standard or FEL for NO_X.

(2)(i) For engines with 110,000 or fewer miles, the adjustment is 0.10 g/bhp-hr.

(ii) For engines with 110,001 to 185,000 miles, the adjustment is 0.15 g/bhp-hr.

(iii) For engines with 185,001 or more miles, the adjustment is 0.20 g/bhp-hr.

(3) For model years prior to 2012, for purposes of determining compliance after title or custody has transferred to the ultimate purchaser, the applicable compliance limit shall be determined by adding 0.01 g/bhp-hr to the otherwise applicable standard or FEL for PM.

(i) [Reserved]

(j) Engines installed in new glider vehicles are subject to the standards of this section as specified in 40 CFR part 1037.

[65 FR 59954, Oct. 6, 2000, as amended at 66 FR 5161, Jan. 18, 2001; 70 FR 34619, June 14, 2005; 70 FR 40432, July 13, 2005; 71 FR 51486, Aug. 30, 2006; 73 FR 37192, June 30, 2008; 81 FR 73974, Oct. 25, 2016]

§ 86.007–15 NO_X and particulate averaging, trading, and banking for heavy-duty engines.

Section 86.007–15 includes text that specifies requirements that differ from § 86.004–15. Where a paragraph in § 86.004–15 is identical and applicable to § 86.007–15, this may be indicated by specifying the corresponding paragraph and the statement ''[Reserved]. For guidance see § 86.004–15.''

(a)–(l) [Reserved]. For guidance see § 86.004–15.

(m) The following provisions apply for model year 2007 and later engines (including engines certified during years 2007–2009 under the phase-in provisions of § 86.007–11(g)(1), § 86.005–10(a), or § 86.008–10(f)(1)). These provisions apply instead of the provisions of paragraphs § 86.004–15 (a) through (k) to the extent that they are in conflict.

(1) Manufacturers of Otto-cycle engines may participate in an NMHC averaging, banking and trading program to show compliance with the standards specified in § 86.008–10. The generation and use of NMHC credits are subject to the same provisions in paragraphs § 86.004–15 (a) through (k) that apply for NO_X plus NMHC credits, except as otherwise specified in this section.

(2) Credits are calculated as NO_X or NMHC credits for engines certified to separate NO_X and NMHC standards. NO_X plus NMHC credits (including banked credits and credits that are generated during years 2007–2009 under the phase-in provisions of § 86.007–11(g)(1), § 86.005–10(a), or § 86.008–10(f)(1)) may be used to show compliance with 2007 or later NO_X standards (NO_X or NMHC standards for Otto-cycle engines), subject to an 0.8 discount factor (e.g., 100 grams of NO_X plus NMHC credits is equivalent to 80 grams of NO_X credits).

(3) NO_X or NMHC (or NO_X plus NMHC) credits may be exchanged between heavy-duty Otto-cycle engine families

certified to the engine standards of this subpart and heavy-duty Otto-cycle engine families certified to the chassis standards of subpart S of this part, subject to an 0.8 discount factor (e.g., 100 grams of NO_X (or NO_X plus NMHC) credits generated from engines would be equivalent to 80 grams of NO_X credits if they are used in the vehicle program of subpart S, and vice versa).

(4) Credits that were previously discounted when they were banked according to paragraph (c) of § 86.004–15, are subject to an additional discount factor of 0.888 instead of the 0.8 discount factor otherwise required by paragraph (m)(2) or (m)(3) of this section. This results in a total discount factor of 0.8 ($0.9 \times 0.888 = 0.8$).

(5) For diesel engine families, the combined number of engines certified to FELs higher than 0.50 g/bhp-hr using banked NO_X (and/or NO_X plus NMHC) credits in any given model year may not exceed 10 percent of the manufacturer's U.S.-directed production of engines in all heavy-duty diesel engine families for that model year.

(6) The FEL must be expressed to the same number of decimal places as the standard (generally, one-hundredth of a gram per brake horsepower-hour). For engines certified to standards expressed only one-tenth of a gram per brake horsepower-hour, if the FEL is below 1.0, then add a zero to the standard in the second decimal place and express the FEL to nearest one-hundredth of a gram per brake horsepower-hour.

(7) Credits are to be rounded to the nearest one-hundredth of a Megagram using ASTM E29–93a (Incorporated by reference at § 86.1).

(8) Credits generated for 2007 and later model year diesel engine families, or generated for 2008 and later model year Otto-cycle engine families are not discounted (except as specified in paragraph (m)(2) or (m)(3) of this section), and do not expire.

(9) For the purpose of using or generating credits during a phase-in of new standards, a manufacturer may elect to split an engine family into two subfamilies (e.g., one which uses credits and one which generates credits). The manufacturer must indicate in the application for certification that the engine family is to be split, and may assign the numbers and configurations of engines within the respective subfamilies at any time prior to the submission of the end-of-year report required by § 86.001–23.

(i) Manufacturers certifying a split diesel engine family to both the Phase 1 and Phase 2 standards with equally sized subfamilies may exclude the engines within that split family from end-of-year NO_X (or NO_X + NMHC) ABT calculations, provided that neither subfamily generates credits for use by other engine families, or uses banked credits, or uses averaging credits from other engine families. All of the engines in that split family must be excluded from the phase-in calculations of § 86.007–11(g)(1) (both from the number of engines complying with the standards being phased-in and from the total number of U.S.-directed production engines.)

(ii) Manufacturers certifying a split Otto-cycle engine family to both the Phase 1 and Phase 2 standards with equally sized subfamilies may exclude the engines within that split family from end-of-year NO_X (or NO_X + NMHC) ABT calculations, provided that neither subfamily generates credits for use by other engine families, or uses banked credits, or uses averaging credits from other engine families. All of the engines in that split family must be excluded from the phase-in calculations of § 86.008–10(f)(1) (both from the number of engines complying with the standards being phased-in and from the total number of U.S.-directed production engines.)

(iii) Manufacturers certifying a split engine family may label all of the engines within that family with a single NO_X or NO_X + NMHC FEL. The FEL on the label will apply for all SEA or other compliance testing.

(iv) Notwithstanding the provisions of paragraph (m)(9)(iii) of this section, for split families, the NO_X FEL shall be used to determine applicability of the provisions of §§ 86.007–11(a)(3)(ii), (a)(4)(i)(B), and (h)(1), and 86.008–10(g).

(10) For model years 2007 through 2009, to be consistent with the phase-in provisions of § 86.007–11(g)(1), credits generated from engines in one diesel engine service class (e.g., light-heavy

duty diesel engines) may be used for averaging by engines in a different diesel engine service class, provided the credits are calculated for both engine families using the conversion factor and useful life of the engine family using the credits, and the engine family using the credits is certified to the standards listed in § 86.007–11(a)(1). Banked or traded credits may not be used by any engine family in a different service class than the service class of the engine family generating the credits.

[66 FR 5163, Jan. 18, 2001]

§ 86.007–17 Onboard diagnostics for engines used in applications less than or equal to 14,000 pounds GVWR.

Heavy-duty engines intended to be installed in heavy duty vehicles at or below 14,000 pounds GVWR that are subject to standards under this subpart must meet onboard diagnostic requirements as specified in § 86.1806.

[79 FR 23688, Apr. 28, 2014]

§ 86.007–21 Application for certification.

Section 86.007–21 includes text that specifies requirements that differ from § 86.004–21, 86.094–21 or 86.096–21. Where a paragraph in § 86.004–21, 86.094–21 or 86.096–21 is identical and applicable to § 86.007–21, this may be indicated by specifying the corresponding paragraph and the statement ''[Reserved]. For guidance see § 86.004–21.'', ''[Reserved]. For guidance see § 86.094–21.'', or ''[Reserved]. For guidance see § 86.096–21.''.

(a)–(b)(3) [Reserved]. For guidance see § 86.094–21.

(b)(4)(i) [Reserved]

(b)(4)(ii)–(b)(5)(iv) [Reserved]. For guidance see § 86.094–21.

(b)(5)(v)–(b)(6) [Reserved]. For guidance see § 86.004–21.

(b)(7)–(b)(8) [Reserved]. For guidance see § 86.094–21.

(c)–(j) [Reserved]. For guidance see § 86.094–21.

(k)–(l) [Reserved]

(m)–(n) [Reserved]. For guidance see § 86.004–21.

(o) For diesel heavy-duty engines, the manufacturer must provide the following additional information pertaining to the supplemental emission test conducted under § 86.1360–2007:

(1) Weighted brake-specific emissions data (i.e., in units of g/bhp-hr), calculated according to 40 CFR 1065.650 for all pollutants for which a brake-specific emission standard is established in this subpart;

(2) For engines subject to the MAEL (see § 86.007–11(a)(3)(ii)), brake specific gaseous emission data for each of the 12 non-idle test points (identified under § 86.1360–2007(b)(1)) and the 3 EPA-selected test points (identified under § 86.1360–2007(b)(2));

(3) For engines subject to the MAEL (see § 86.007–11(a)(3)(ii)), concentrations and mass flow rates of all regulated gaseous emissions plus carbon dioxide;

(4) Values of all emission-related engine control variables at each test point;

(5) A statement that the test results correspond to the test engine selection criteria in 40 CFR 1065.401. The manufacturer also must maintain records at the manufacturer's facility which contain all test data, engineering analyses, and other information which provides the basis for this statement, where such information exists. The manufacturer must provide such information to the Administrator upon request;

(6) For engines subject to the MAEL (see § 86.007–11(a)(3)(ii)), a statement that the engines will comply with the weighted average emissions standard and interpolated values comply with the Maximum Allowable Emission Limits specified in § 86.007–11(a)(3) for the useful life of the engine where applicable. The manufacturer also must maintain records at the manufacturer's facility which contain a detailed description of all test data, engineering analyses, and other information which provides the basis for this statement, where such information exists. The manufacturer must provide such information to the Administrator upon request.

(7) [Reserved]

(p)(1) The manufacturer must provide a statement in the application for certification that the diesel heavy-duty engine for which certification is being requested will comply with the applicable Not-To-Exceed Limits specified in

§ 86.007–11(a)(4) when operated under all conditions which may reasonably be expected to be encountered in normal vehicle operation and use. The manufacturer also must maintain records at the manufacturers facility which contain all test data, engineering analyses, and other information which provides the basis for this statement, where such information exists. The manufacturer must provide such information to the Administrator upon request.

(2) For engines equipped with exhaust gas recirculation, the manufacturer must provide a detailed description of the control system the engine will use to comply with the requirements of §§ 86.007–11(a)(4)(iii) and 86.1370–2007(f) for NTE cold temperature operating exclusion, including but not limited to the method the manufacturer will use to access this exclusion during normal vehicle operation.

(3) For each engine model and/or horsepower rating within an engine family for which a manufacturer is applying for an NTE deficiency(ies) under the provisions of § 86.007–11(a)(4)(iv), the manufacturer's application for an NTE deficiency(ies) must include a complete description of the deficiency, including but not limited to: the specific description of the deficiency; what pollutant the deficiency is being applied for, all engineering efforts the manufacturer has made to overcome the deficiency, what specific operating conditions the deficiency is being requested for (i.e., temperature ranges, humidity ranges, altitude ranges, etc.), a full description of the auxiliary emission control device(s) which will be used to maintain emissions to the lowest practical level; and what the lowest practical emission level will be.

(q) The manufacturer must name an agent for service of process located in the United States. Service on this agent constitutes service on you or any of your officers or employees for any action by EPA or otherwise by the United States related to the requirements of this part.

[65 FR 59954, Oct. 6, 2000, as amended at 70 FR 40433, July 13, 2005; 71 FR 51487, Aug. 30, 2006; 79 FR 23689, Apr. 28, 2014]

§ 86.007–23 Required data.

Section 86.007–23 includes text that specifies requirements that differ from § 86.098–23 or § 86.001–23. Where a paragraph in § 86.098–23 or § 86.001–23 is identical and applicable to § 86.007–23, this may be indicated by specifying the corresponding paragraph and the statement ''[Reserved]. For guidance see § 86.098–23.'' or ''[Reserved]. For guidance see § 86.001–23.''.

(a)–(b)(1) [Reserved]. For guidance see § 86.098–23.

(b)(2) [Reserved]

(b)(3) and (b)(4) [Reserved]. For guidance see § 86.098–23.

(c) *Emission data from certification vehicles and engines.* The manufacturer shall submit emission data for each applicable emission standard from vehicles and engines tested in accordance with applicable test procedures and in such numbers as specified. These data shall include zero-mile or zero-hour data, if generated, and emission data generated for certification as required under § 86.004–26. However, manufacturers may provide a statement in the application for certification that vehicles and engines comply with the following standards instead of submitting test data, provided that the statement is supported by previous emission tests, development tests, or other appropriate information, and good engineering judgment:

(1) Idle CO, smoke, or particulate matter emissions from methanol-fueled or gaseous-fueled diesel-cycle certification engines.

(2) Particulate matter emissions from Otto-cycle certification engines or gaseous-fueled certification engines.

(3) CO emissions from diesel-cycle certification engines.

(4) Formaldehyde emissions from petroleum-fueled engines.

(5) Particulate matter and formaldehyde emissions when conducting Selective Enforcement Audit testing of Otto-cycle engines.

(6) Smoke from methanol-fueled or petroleum-fueled diesel-cycle certification engines.

(7) Smoke when conducting Selective Enforcement Audit testing of diesel-cycle engines.

(8) Evaporative emissions from vehicles fueled by natural gas, liquefied petroleum gas, or hydrogen.

(d)–(e)(1) [Reserved]. For guidance see § 86.098–23.

(e)(2) and (e)(3) [Reserved]. For guidance see § 86.001–23.

(f)–(g) [Reserved]

(h)–(k) [Reserved]. For guidance see § 86.098–23.

(l) [Reserved]

(m) [Reserved]. For guidance see § 86.098–23.

[66 FR 5164, Jan. 18, 2001, as amended at 74 FR 56373, Oct. 30, 2009; 78 FR 36388, June 17, 2013; 79 FR 23689, Apr. 28, 2014]

§ 86.007–30 Certification.

(a)(1)(i) If, after a review of the test reports and data submitted by the manufacturer, data derived from any inspection carried out under § 86.091–7(c) and any other pertinent data or information, the Administrator determines that a test vehicle(s) (or test engine(s)) meets the requirements of the Act and of this subpart, he will issue a certificate of conformity with respect to such vehicle(s) (or engine(s)) except in cases covered by paragraphs (a)(1)(ii) and (c) of this section.

(ii) *Gasoline-fueled and methanol-fueled heavy-duty vehicles.* If, after a review of the statement(s) of compliance submitted by the manufacturer under § 86.094–23(b)(4) and any other pertinent data or information, the Administrator determines that the requirements of the Act and this subpart have been met, he will issue one certificate of conformity per manufacturer with respect to the evaporative emission family(ies) covered by paragraph (c) of this section.

(2) Such certificate will be issued for such period not to exceed one model year as the Administrator may determine and upon such terms as he may deem necessary or appropriate to assure that any new motor vehicle (or new motor vehicle engine) covered by the certificate will meet the requirements of the Act and of this part.

(3)(i) One such certificate will be issued for each engine family. For gasoline-fueled and methanol-fueled light-duty vehicles and light-duty trucks, and petroleum-fueled diesel cycle light-duty vehicles and light-duty trucks not certified under § 86.098–28(g), one such certificate will be issued for each engine family-evaporative/refueling emission family combination. Each certificate will certify compliance with no more than one set of in-use and certification standards (or family emission limits, as appropriate).

(ii) For gasoline-fueled and methanol fueled heavy-duty vehicles, one such certificate will be issued for each manufacturer and will certify compliance for those vehicles previously identified in that manufacturer's statement(s) of compliance as required in § 86.098–23(b)(4)(i) and (ii).

(iii) For diesel light-duty vehicles and light-duty trucks, or diesel HDEs, included in the applicable particulate averaging program, the manufacturer may at any time during production elect to change the level of any family particulate emission limit by demonstrating compliance with the new limit as described in § 86.094–28(a)(6), § 86.094–28(b)(5)(i), or § 86.004–28(c)(5)(i). New certificates issued under this paragraph will be applicable only for vehicles (or engines) produced subsequent to the date of issuance.

(iv) For light-duty trucks or HDEs included in the applicable NO_X averaging program, the manufacturer may at any time during production elect to change the level of any family NO_X emission limit by demonstrating compliance with the new limit as described in § 86.094–28(b)(5)(ii) or § 86.004–28(c)(5)(ii). New certificates issued under this paragraph will be applicable only for vehicles (or engines) produced subsequent to the day of issue.

(4)–(5) [Reserved]

(6) Catalyst-equipped vehicles, otherwise covered by a certificate, which are driven outside the United States, Canada, and Mexico will be presumed to have been operated on leaded gasoline resulting in deactivation of the catalysts. If these vehicles are imported or offered for importation without retrofit of the catalyst, they will be considered not to be within the coverage of the certificate unless included in a catalyst control program operated by a manufacturer or a United States Government agency and approved by the Administrator.

(7) [Reserved]

(8) For heavy-duty engines, a certificate covers only those new motor vehicle engines installed in heavy-duty vehicles which conform to the minimum gross vehicle weight rating, curb weight, or frontal area limitations for heavyduty vehicles described in § 86.082–2.

(9) For incomplete gasoline-fueled and methanol-fueled heavy-duty vehicles a certificate covers only those new motor vehicles which, when completed, conform to the nominal maximum fuel tank capacity limitations as described in the application for certification as required in § 86.094–21(e).

(10)(i) [Reserved]

(ii) For all heavy-duty diesel-cycle engines which are included in the particulate ABT programs under § 86.098–15 or superseding ABT sections as applicable, the provisions of paragraphs (a)(10)(ii)(A)–(C) of this section apply.

(A) All certificates issued are conditional upon the manufacturer complying with the provisions of § 86.098–15 or superseding ABT sections as applicable and the ABT related provisions of other applicable sections, both during and after the model year production.

(B) Failure to comply with all provisions of § 86.098–15 or superseding ABT sections as applicable will be considered to be a failure to satisfy the conditions upon which the certificate was issued, and the certificate may be deemed void *ab initio*.

(C) The manufacturer shall bear the burden of establishing to the satisfaction of the Administrator that the conditions upon which the certificate was issued were satisfied or excused.

(11)(i) [Reserved]

(ii) For all HDEs which are included in the NO_X plus NMHC ABT programs contained in § 86.098–15, or superseding ABT sections as applicable, the provisions of paragraphs (a)(11)(ii) (A)–(C) of this section apply.

(A) All certificates issued are conditional upon the manufacturer complying with the provisions of § 86.098–15 or superseding ABT sections as applicable and the ABT related provisions of other applicable sections, both during and after the model year production.

(B) Failure to comply with all provisions of § 86.098–15 or superseding ABT sections as applicable will be considered to be a failure to satisfy the conditions upon which the certificate was issued, and the certificate may be deemed void *ab initio*.

(C) The manufacturer shall bear the burden of establishing to the satisfaction of the Administrator that the conditions upon which the certificate was issued were satisfied or excused.

(12)–(16) [Reserved]

(17) For all heavy-duty vehicles certified to evaporative test procedures and accompanying standards specified under § 86.096–10:

(i) All certificates issued are conditional upon the manufacturer complying with all provisions of § 86.096–10 both during and after model year production.

(ii) Failure to meet the required implementation schedule sales percentages as specified in § 86.096–10 will be considered to be a failure to satisfy the conditions upon which the certificate was issued and the vehicles sold in violation of the implementation schedule shall not be covered by the certificate.

(iii) The manufacturer shall bear the burden of establishing to the satisfaction of the Administrator that the conditions upon which the certificate was issued were satisfied.

(18) For all heavy-duty vehicles certified to evaporative test procedures and accompanying standards specified under § 86.098–11:

(i) All certificates issued are conditional upon the manufacturer complying with all provisions of § 86.098–11 both during and after model year production.

(ii) Failure to meet the required implementation schedule sales percentages as specified in § 86.098–11 will be considered to be a failure to satisfy the conditions upon which the certificate was issued and the vehicles sold in violation of the implementation schedule shall not be covered by the certificate.

(iii) The manufacturer shall bear the burden of establishing to the satisfaction of the Administrator that the conditions upon which the certificate was issued were satisfied.

(b)(1) The Administrator will determine whether a vehicle (or engine) covered by the application complies with

applicable standards (or family emission limits, as appropriate) by observing the following relationships: in paragraphs (b)(1)(i) through (iv) of this section:

(i)–(ii) [Reserved]

(iii) *Heavy-duty engines.* (A) An Otto-cycle emission data test engine selected under § 86.094–24(b)(2)(iv) shall represent all engines in the same family of the same engine displacement-exhaust emission control system combination.

(B) An Otto-cycle emission data test engine selected under § 86.094–24(b)(2)(iii) shall represent all engines in the same engine family of the same engine displacement-exhaust emission control system combination.

(C) A diesel emission data test engine selected under § 86.094–24(b)(3)(ii) shall represent all engines in the same engine-system combination.

(D) A diesel emission data test engine selected under § 86.094–24(b)(3)(iii) shall represent all engines of that emission control system at the rated fuel delivery of the test engine.

(iv) *Gasoline-fueled and methanol-fueled heavy-duty vehicles.* A statement of compliance submitted under § 86.094–23(b)(4)(i) or (ii) shall represent all vehicles in the same evaporative emission family-evaporative emission control system combination.

(2) The Administrator will proceed as in paragraph (a) of this section with respect to the vehicles (or engines) belonging to an engine family or engine family-evaporative/refueling emission family combination (as applicable), all of which comply with all applicable standards (or family emission limits, as appropriate).

(3) If after a review of the test reports and data submitted by the manufacturer, data derived from any additional testing conducted pursuant to § 86.091–29, data or information derived from any inspection carried out under § 86.094–7(d) or any other pertinent data or information, the Administrator determines that one or more test vehicles (or test engines) of the certification test fleet do not meet applicable standards (or family emission limits, as appropriate), he will notify the manufacturer in writing, setting forth the basis for his determination. Within 30 days following receipt of the notification, the manufacturer may request a hearing on the Administrator's determination. The request shall be in writing, signed by an authorized representative of the manufacturer and shall include a statement specifying the manufacturer's objections to the Administrator's determination and data in support of such objections. If, after a review of the request and supporting data, the Administrator finds that the request raises a substantial factual issue, he shall provide the manufacturer a hearing in accordance with § 86.078–6 with respect to such issue.

(4) [Reserved]

(5) For heavy-duty engines the manufacturer may, at his option, proceed with any of the following alternatives with respect to any engine family represented by a test engine(s) determined not in compliance with applicable standards (or family emission limit, as appropriate):

(i) Request a hearing under § 86.078–6; or

(ii) Delete from the application for certification the engines represented by the failing test engine. (Engines so deleted may be included in a later request for certification under § 86.079–32.) The Administrator may then select in place of each failing engine an alternate engine chosen in accordance with selection criteria employed in selecting the engine that failed; or

(iii) Modify the test engine and demonstrate by testing that it meets applicable standards. Another engine which is in all material respect the same as the first engine, as modified, may then be operated and tested in accordance with applicable test procedures.

(6) If the manufacturer does not request a hearing or present the required data under paragraphs (b)(4) or (5) of this section (as applicable) of this section, the Administrator will deny certification.

(c)(1) Notwithstanding the fact that any certification vehicle(s) (or certification engine(s)) may comply with other provisions of this subpart, the Administrator may withhold or deny the issuance of a certificate of conformity (or suspend or revoke any such certificate which has been issued) with

respect to any such vehicle(s) (or engine(s)) if:

(i) The manufacturer submits false or incomplete information in his application for certification thereof;

(ii) The manufacturer renders inaccurate any test data which he submits pertaining thereto or otherwise circumvents the intent of the Act, or of this part with respect to such vehicle (or engine);

(iii) Any EPA Enforcement Officer is denied access on the terms specified in § 86.091–7(d) to any facility or portion thereof which contains any of the following:

(A) The vehicle (or engine);

(B) Any components used or considered for use in its modification or buildup into a certification vehicle (or certification engine);

(C) Any production vehicle (or production engine) which is or will be claimed by the manufacturer to be covered by the certificate;

(D) Any step in the construction of a vehicle (or engine) described in paragraph (c)(iii)(C) of this section;

(E) Any records, documents, reports, or histories required by this part to be kept concerning any of the above; or

(iv) Any EPA Enforcement Officer is denied ''reasonable assistance'' (as defined in § 86.091–7(d) in examining any of the items listed in paragraph (c)(1)(iii) of this section.

(2) The sanctions of withholding, denying, revoking, or suspending of a certificate may be imposed for the reasons in paragraphs (c)(1)(i), (ii), (iii), or (iv) of this section only when the infraction is substantial.

(3) In any case in which a manufacturer knowingly submits false or inaccurate information or knowingly renders inaccurate or invalid any test data or commits any other fraudulent acts and such acts contribute substantially to the Administrator's decision to issue a certificate of conformity, the Administrator may deem such certificate void *ab initio*.

(4) In any case in which certification of a vehicle (or engine) is proposed to be withheld, denied, revoked, or suspended under paragraph (c)(1)(iii) or (iv) of this section, and in which the Administrator has presented to the manufacturer involved reasonable evidence that a violation of § 86.091–7(d) in fact occurred, the manufacturer, if he wishes to contend that, even though the violation occurred, the vehicle (or engine) in question was not involved in the violation to a degree that would warrant withholding, denial, revocation, or suspension of certification under either paragraph (c)(1)(iii) or (iv) of this section, shall have the burden of establishing that contention to the satisfaction of the Administrator.

(5) Any revocation or suspension of certification under paragraph (c)(1) of this section shall:

(i) Be made only after the manufacturer concerned has been offered an opportunity for a hearing conducted in accordance with § 86.078–6 hereof; and

(ii) Extend no further than to forbid the introduction into commerce of vehicles (or engines) previously covered by the certification which are still in the hands of the manufacturer, except in cases of such fraud or other misconduct as makes the certification invalid ab initio.

(6) The manufacturer may request in the form and manner specified in paragraph (b)(3) of this section that any determination made by the Administrator under paragraph (c)(1) of this section to withhold or deny certification be reviewed in a hearing conducted in accordance with § 86.078–6. If the Administrator finds, after a review of the request and supporting data, that the request raises a substantial factual issue, he will grant the request with respect to such issue.

(d) [Reserved]

(e) *For light-duty trucks and heavy-duty engines*. (1) Notwithstanding the fact that any vehicle configuration or engine family may be covered by a valid outstanding certificate of conformity, the Administrator may suspend such outstanding certificate of conformity in whole or in part with respect to such vehicle or engine configuration or engine family if:

(i) The manufacturer refuses to comply with the provisions of a test order issued by the Administrator pursuant to § 86.1003; or

(ii) The manufacturer refuses to comply with any of the requirements of § 86.1003; or

(iii) The manufacturer submits false or incomplete information in any report or information provided pursuant to the requirements of § 86.1009; or

(iv) The manufacturer renders inaccurate any test data submitted pursuant to § 86.1009; or

(v) Any EPA Enforcement Officer is denied the opportunity to conduct activities related to entry and access as authorized in § 86.1006 of this part and in a warrant or court order presented to the manufacturer or the party in charge of a facility in question; or

(vi) EPA Enforcement Officers are unable to conduct activities related to entry and access as authorized in § 86.1006 of this part because a manufacturer has located a facility in a foreign jurisdiction where local law prohibits those activities; or

(vii) The manufacturer refuses to or in fact does not comply with the requirements of §§ 86.1004(a), 86.1005, 86.1007, 86.1008, 86.1010, 86.1011, or 86.1013.

(2) The sanction of suspending a certificate may not be imposed for the reasons in paragraph (e)(1) (i), (ii), or (vii) of this section where such refusal or denial is caused by conditions and circumstances outside the control of the manufacturer which renders it impossible to comply with those requirements. Such conditions and circumstances shall include, but are not limited to, any uncontrollable factors which result in the temporary unavailability of equipment and personnel needed to conduct the required tests, such as equipment breakdown or failure or illness of personnel, but shall not include failure of the manufacturers to adequately plan for and provide the equipment and personnel needed to conduct the tests. The manufacturer will bear the burden of establishing the presence of the conditions and circumstances required by this paragraph.

(3) The sanction of suspending a certificate may be imposed for the reasons outlined in paragraph (e)(1)(iii), (iv), or (v) of this section only when the infraction is substantial.

(4) In any case in which a manufacturer knowingly submitted false or inaccurate information or knowingly rendered inaccurate any test data or committed any other fraudulent acts, and such acts contributed substantially to the Administrator's original decision not to suspend or revoke a certificate of conformity in whole or in part, the Administrator may deem such certificate void from the date of such fraudulent act.

(5) In any case in which certification of a light-duty truck or heavy-duty engine is proposed to be suspended under paragraph (e)(1)(v) of this section and in which the Administrator has presented to the manufacturer involved reasonable evidence that a violation of § 86.1006 in fact occurred, if the manufacturer wishes to contend that, although the violation occurred, the vehicle or engine configuration or engine family in question was not involved in the violation to a degree that would warrant suspension of certification under paragraph (e)(1)(v) of this section, he shall have the burden of establishing that contention to the satisfaction of the Administrator.

(6) Any suspension of certification under paragraph (e)(1) of this section shall:

(i) Be made only after the manufacturer concerned has been offered an opportunity for a hearing conducted in accordance with § 86.1014; and

(ii) Not apply to vehicles or engines no longer in the hands of the manufacturer.

(7) Any voiding of a certificate of conformity under paragraph (e)(4) of this section shall be made only after the manufacturer concerned has been offered an opportunity for a hearing conducted in accordance with § 86.1014.

(8) Any voiding of the certificate under paragraph (a) (10) or (11) of this section will be made only after the manufacturer concerned has been offered an opportunity for a hearing conducted in accordance with § 86.1014.

[74 FR 8360, Feb. 24, 2009, as amended at 79 FR 23689, Apr. 28, 2014; 81 FR 73975, Oct. 25, 2016]

§ 86.008–10 Emission standards for 2008 and later model year Otto-cycle heavy-duty engines and vehicles.

This section applies to new 2008 and later model year Otto-cycle heavy-duty engines and vehicles. Starting in model year 2021, this section applies to light

HDE and medium HDE, but it no longer applies to heavy HDE (see 40 CFR 1036.140(a) and 1036.150(c)).

(a)(1) Exhaust emissions from new 2008 and later model year Otto-cycle HDEs shall not exceed:

(i)(A) *Oxides of Nitrogen (NO_X).* 0.20 grams per brake horsepower-hour (0.075 grams per megajoule).

(B) A manufacturer may elect to include any or all of its Otto-cycle HDE families in any or all of the NO_X and NO_X plus NMHC emissions ABT programs for HDEs, within the restrictions described in § 86.008–15 or § 86.004–15. If the manufacturer elects to include engine families in any of these programs, the NO_X FEL may not exceed 0.50 grams per brake horsepower-hour (0.26 grams per megajoule). This ceiling value applies whether credits for the family are derived from averaging, banking, or trading programs. The NO_X FEL cap is 0.80 for model years before 2011 for manufacturers choosing to certify to the 1.5 g/bhp-hr NO_X + NMHC standard in 2003 or 2004, in accordance with § 86.005–10(f).

(ii)(A) *Nonmethane hydrocarbon (NMHC) for engines fueled with gasoline.* 0.14 grams per brake horsepower-hour (0.052 grams per megajoule).

(B) *Nonmethane-nonethane hydrocarbon (NMNEHC) for engines fueled with natural gas or liquefied petroleum gas.* 0.14 grams per brake horsepower-hour (0.052 grams per megajoule).

(C) *Nonmethane hydrocarbon equivalent (NMHCE) for engines fueled with methanol.* 0.14 grams per brake horsepower-hour (0.052 grams per megajoule).

(D) A manufacturer may elect to include any or all of its Otto-cycle HDE families in any or all of the hydrocarbon emission ABT programs for HDEs, within the restrictions described in § 86.007–15 or § 86.004–15. If the manufacturer elects to include engine families in any of these programs, the hydrocarbon FEL may not exceed 0.30 grams per brake horsepower-hour. This ceiling value applies whether credits for the family are derived from averaging, banking, or trading programs. The hydrocarbon FEL cap is 0.40 for model years before 2011 for manufacturers choosing to certify to the 1.5 g/bhp-hr NO_X + HC in 2004, as allowed in § 86.005–10.

(iii) Carbon monoxide. 14.4 grams per brake horsepower-hour (5.36 grams per megajoule).

(iv) *Particulate.* 0.01 grams per brake horsepower-hour (0.0037grams per megajoule).

(2) The standards set forth in paragraph (a)(1) of this section refer to the exhaust emitted over the operating schedule set forth in paragraph (f)(1) of Appendix I to this part, and measured and calculated in accordance with the procedures set forth in subpart N or P of this part:

(i) Perform the test interval set forth in paragraph (f)(1) of Appendix I of this part with a cold-start according to 40 CFR part 1065, subpart F. This is the cold-start test interval.

(ii) Shut down the engine after completing the test interval and allow 20 minutes to elapse. This is the hot soak.

(iii) Repeat the test interval. This is the hot-start test interval.

(iv) Calculate the total emission mass of each constituent, m, and the total work, W, over each test interval according to 40 CFR 1065.650.

(v) Determine your engine's brake-specific emissions using the following calculation, which weights the emissions from the cold-start and hot-start test intervals:

$$\text{brake-specific emissions} = \frac{m_{\text{cold-start}} + 6 \cdot m_{\text{hot-start}}}{W_{\text{cold-start}} + 6 \cdot W_{\text{hot-start}}}$$

(3)–(4) [Reserved]

(b) This paragraph (b) applies as specified in 40 CFR 1037.103. Evaporative emissions from heavy-duty vehicles shall not exceed the following standards when measured using the test procedures specified in 40 CFR 1037.501. The standards apply equally to certification and in-use vehicles. The spitback standard also applies to newly assembled vehicles. For certification vehicles only, manufacturers may conduct testing to quantify a level of nonfuel background emissions for an individual test vehicle. Such a demonstration must include a description of the source(s) of emissions and an estimated decay rate. The demonstrated level of nonfuel background emissions may be subtracted from emission test results from certification vehicles if

approved in advance by the Administrator.

(1) Hydrocarbons (for vehicles equipped with gasoline-fueled, natural gas-fueled or liquefied petroleum gas-fueled engines).

(i) For vehicles with a Gross Vehicle Weight Rating of up to 14,000 lbs:

(A)(*1*) For the full three-diurnal test sequence described in § 86.1230–96, diurnal plus hot soak measurements: 1.4 grams per test.

(*2*) For the supplemental two-diurnal test sequence described in § 86.1230–96, diurnal plus hot soak measurements (gasoline-fueled vehicles only): 1.75 grams per test.

(B) Running loss test (gasoline-fueled vehicles only): 0.05 grams per mile.

(C) Fuel dispensing spitback test (gasoline-fueled vehicles only): 1.0 grams per test.

(ii) For vehicles with a Gross Vehicle Weight Rating of greater than 14,000 lbs:

(A)(*1*) For the full three-diurnal test sequence described in § 86.1230–96, diurnal plus hot soak measurements: 1.9 grams per test.

(*2*) For the supplemental two-diurnal test sequence described in § 86.1230–96, diurnal plus hot soak measurements (gasoline-fueled vehicles only): 2.3 grams per test.

(B) Running loss test (gasoline-fueled vehicles only): 0.05 grams per mile.

(2) Total Hydrocarbon Equivalent (for vehicles equipped with methanol-fueled engines).

(i) For vehicles with a Gross Vehicle Weight Rating of up to 14,000 lbs:

(A)(*1*) For the full three-diurnal test sequence described in § 86.1230–96, diurnal plus hot soak measurements: 1.4 grams carbon per test.

(*2*) For the supplemental two-diurnal test sequence described in § 86.1230–96, diurnal plus hot soak measurements: 1.75 grams carbon per test.

(B) Running loss test: 0.05 grams carbon per mile.

(C) Fuel dispensing spitback test: 1.0 grams carbon per test.

(ii) For vehicles with a Gross Vehicle Weight Rating of greater than 14,000 lbs:

(A)(*1*) For the full three-diurnal test sequence described in § 86.1230–96, diurnal plus hot soak measurements: 1.9 grams carbon per test.

(*2*) For the supplemental two-diurnal test sequence described in § 86.1230–96, diurnal plus hot soak measurements: 2.3 grams carbon per test.

(B) Running loss test: 0.05 grams carbon per mile.

(3)(i) For vehicles with a Gross Vehicle Weight Rating of up to 26,000 lbs, the standards set forth in paragraphs (b)(1) and (b)(2) of this section refer to a composite sample of evaporative emissions collected under the conditions and measured in accordance with the procedures set forth in subpart M of this part.

(ii) For vehicles with a Gross Vehicle Weight Rating of greater than 26,000 lbs., the standards set forth in paragraphs (b)(1)(ii) and (b)(2)(ii) of this section refer to the manufacturer's engineering design evaluation using good engineering practice (a statement of which is required in § 86.098–23(b)(4)(ii)).

(4) All fuel vapor generated in a gasoline- or methanol-fueled heavy-duty vehicle during in-use operations shall be routed exclusively to the evaporative control system (e.g., either canister or engine purge). The only exception to this requirement shall be for emergencies.

(5) Compressed natural gas vehicles must meet the requirements for fueling connection devices as specified in § 86.1813–17(f)(1). Vehicles meeting these requirements are deemed to comply with evaporative emission standards.

(c) No crankcase emissions shall be discharged into the ambient atmosphere from any new 2008 or later model year Otto-cycle HDE.

(d) Every manufacturer of new motor vehicle engines subject to the standards prescribed in this section shall, prior to taking any of the actions specified in section 203(a)(1) of the Act, test or cause to be tested motor vehicle engines in accordance with applicable procedures in subpart N or P of this part to ascertain that such test engines meet the requirements of this section.

(e) The standards described in this section do not apply to Otto-cycle medium-duty passenger vehicles (MDPVs) that are subject to regulation under subpart S of this part, except as specified in subpart S of this part. The

standards described in this section also do not apply to Otto-cycle engines used in such MDPVs, except as specified in subpart S of this part. The term ''medium-duty passenger vehicle'' is defined in § 86.1803.

(f) [Reserved]

(g) Model year 2018 and later engines that will be installed in specialty vehicles as allowed by 40 CFR 1037.605 may meet alternate emission standards as follows:

(1) The engines must be of a configuration that is identical to one that is certified under 40 CFR part 1048 to the Blue Sky standards under 40 CFR 1048.140.

(2) Except as specified in this paragraph (g), engines certified under this paragraph (g) must meet all the requirements that apply under 40 CFR part 1048 instead of the comparable provisions in this subpart A. Before shipping engines under this section, you must have written assurance from the vehicle manufacturers that they need a certain number of exempted engines under this section. In your annual production report under 40 CFR 1048.250, count these engines separately and identify the vehicle manufacturers that will be installing them. Treat these engines as part of the corresponding engine family under 40 CFR part 1048 for compliance purposes such as testing production engines, in-use testing, defect reporting, and recall.

(3) The engines must be labeled as described in § 86.095–35, with the following statement instead of the one specified in § 86.095–35(a)(3)(iii)(H): ''This engine conforms to alternate standards for specialty vehicles under 40 CFR 86.008–10(g)''. Engines certified under this paragraph (g) may not have the label specified for nonroad engines in 40 CFR part 1048 or any other label identifying them as nonroad engines.

(4) In a separate application for a certificate of conformity, identify the corresponding nonroad engine family, describe the label required under this paragraph (g), state that you meet applicable diagnostic requirements under 40 CFR part 1048, and identify your projected U.S.-directed production volume.

(5) No additional certification fee applies for engines certified under this paragraph (g).

(6) Engines certified under this paragraph (g) may not generate or use emission credits under this part. The vehicles in which these engines are installed may generate or use emission credits as described in 40 CFR part 1037.

(7) Engines may instead meet standards for heavy-duty highway engines in California, as demonstrated by an Executive Order issued by the California Air Resources Board.

[66 FR 5165, Jan. 18, 2001, as amended at 75 FR 22978, Apr. 30, 2010; 79 FR 23689, Apr. 28, 2014; 81 FR 73975, Oct. 25, 2016]

§ 86.010–2 Definitions.

The definitions of § 86.004–2 continue to apply to 2004 and later model year vehicles. The definitions listed in this section apply beginning with the 2010 model year.

DTC means diagnostic trouble code.

Engine or engine system as used in §§ 86.007–17, 86.007–30, 86.010–18, and 86.010–38 means the engine, fuel system, induction system, aftertreatment system, and everything that makes up the system for which an engine manufacturer has received a certificate of conformity.

Engine start as used in § 86.010–18 means the point when the engine reaches a speed 150 rpm below the normal, warmed-up idle speed (as determined in the drive position for vehicles equipped with an automatic transmission). For hybrid vehicles or for engines employing alternative engine start hardware or strategies (e.g., integrated starter and generators.), the manufacturer may use an alternative definition for engine start (e.g., key-on) provided the alternative definition is based on equivalence to an engine start for a conventional vehicle.

Functional check, in the context of onboard diagnostics, means verifying that a component and/or system that receives information from a control computer responds properly to a command from the control computer.

Ignition cycle as used in § 86.010–18 means a cycle that begins with engine start, meets the engine start definition for at least two seconds plus or minus

one second, and ends with engine shutoff.

Limp-home operation as used in § 86.010–18 means an operating mode that an engine is designed to enter upon determining that normal operation cannot be maintained. In general, limp-home operation implies that a component or system is not operating properly or is believed to be not operating properly.

Malfunction means the conditions have been met that require the activation of an OBD malfunction indicator light and storage of a DTC.

MIL-on DTC means the diagnostic trouble code stored when an OBD system has detected and confirmed that a malfunction exists (e.g., typically on the second drive cycle during which a given OBD monitor has evaluated a system or component). Industry standards may refer to this as a confirmed or an active DTC.

Onboard Diagnostics (OBD) group means a combination of engines, engine families, or engine ratings that use the same OBD strategies and similar calibrations.

Pending DTC means the diagnostic trouble code stored upon the detection of a potential malfunction.

Permanent DTC means a DTC that corresponds to a MIL-on DTC and is stored in non-volatile random access memory (NVRAM). A permanent DTC can only be erased by the OBD system itself and cannot be erased through human interaction with the OBD system or any onboard computer.

Potential malfunction means that conditions have been detected that meet the OBD malfunction criteria but for which more drive cycles are allowed to provide further evaluation prior to confirming that a malfunction exists.

Previous-MIL-on DTC means a DTC that corresponds to a MIL-on DTC but is distinguished by representing a malfunction that the OBD system has determined no longer exists but for which insufficient operation has occurred to satisfy the DTC erasure provisions.

Rationality check, in the context of onboard diagnostics, means verifying that a component that provides input to a control computer provides an accurate input to the control computer while in the range of normal operation and when compared to all other available information.

Similar conditions, in the context of onboard diagnostics, means engine conditions having an engine speed within 375 rpm, load conditions within 20 percent, and the same warm up status (i.e., cold or hot). The manufacturer may use other definitions of similar conditions based on comparable timeliness and reliability in detecting similar engine operation.

[74 FR 8369, Feb. 24, 2009]

§ 86.010–18 On-board Diagnostics for engines used in applications greater than 14,000 pounds GVWR.

(a) *General*. According to the implementation schedule shown in paragraph (o) of this section, heavy-duty engines intended for use in a heavy-duty vehicle weighing more than 14,000 pounds GVWR must be equipped with an on-board diagnostic (OBD) system capable of monitoring all emission-related engine systems or components during the life of the engine. The OBD system is required to detect all malfunctions specified in paragraphs (g), (h), and (i) of this § 86.010–18 although the OBD system is not required to use a unique monitor to detect each of those malfunctions.

(1) When the OBD system detects a malfunction, it must store a pending, a MIL-on, or a previous-MIL-on diagnostic trouble code (DTC) in the onboard computer's memory. A malfunction indicator light (MIL) must also be activated as specified in paragraph (b) of this section.

(2) *Data link connector*. (i) For model years 2010 through 2012, the OBD system must be equipped with a data link connector to provide access to the stored DTCs as specified in paragraph (k)(2) of this section.

(ii) For model years 2013 and later, the OBD system must be equipped with a standardized data link connector to provide access to the stored DTCs as specified in paragraph (k)(2) of this section.

(3) The OBD system cannot be programmed or otherwise designed to deactivate based on age and/or mileage. This requirement does not alter existing law and enforcement practice regarding a manufacturer's liability for

an engine beyond its regulatory useful life, except where an engine has been programmed or otherwise designed so that an OBD system deactivates based on age and/or mileage of the engine.

(4) *Drive cycle or driving cycle*, in the context of this §86.010–18, means operation that meets any of the conditions of paragraphs (a)(4)(i) through (a)(4)(iv) of this section. Further, for OBD monitors that run during engine-off conditions, the period of engine-off time following engine shutoff and up to the next engine start may be considered part of the drive cycle for the conditions of paragraphs (a)(4)(i) and (a)(4)(iv) of this section. For engines/vehicles that employ engine shutoff OBD monitoring strategies that do not require the vehicle operator to restart the engine to continue vehicle operation (e.g., a hybrid bus with engine shutoff at idle), the manufacturer may use an alternative definition for drive cycle (e.g., key-on followed by key-off). Any alternative definition must be based on equivalence to engine startup and engine shutoff signaling the beginning and ending of a single driving event for a conventional vehicle. For engines that are not likely to be routinely operated for long continuous periods of time, a manufacturer may also request approval to use an alternative definition for drive cycle (e.g., solely based on engine start and engine shutoff without regard to four hours of continuous engine-on time). Administrator approval of the alternative definition will be based on manufacturer-submitted data and/or information demonstrating the typical usage, operating habits, and/or driving patterns of these vehicles.

(i) Begins with engine start and ends with engine shutoff;

(ii) Begins with engine start and ends after four hours of continuous engine-on operation;

(iii) Begins at the end of the previous four hours of continuous engine-on operation and ends after four hours of continuous engine-on operation; or

(iv) Begins at the end of the previous four hours of continuous engine-on operation and ends with engine shutoff.

(5) As an alternative to demonstrating compliance with the provisions of paragraphs (b) through (l) of this §86.010–18, a manufacturer may demonstrate how the OBD system they have designed to comply with California OBD requirements for engines used in applications greater than 14,000 pounds also complies with the intent of the provisions of paragraphs (b) through (l) of this section. To make use of this alternative, the manufacturer must demonstrate to the Administrator how the OBD system they intend to certify meets the intent behind all of the requirements of this section, where applicable (e.g., paragraph (h) of this section would not apply for a diesel fueled/CI engine). Furthermore, if making use of this alternative, the manufacturer must comply with the specific certification documentation requirements of paragraph (m)(3) of this section.

(6) *Temporary provisions to address hardship due to unusual circumstances.* (i) After considering the unusual circumstances, the Administrator may permit the manufacturer to introduce into U.S. commerce engines that do not comply with this §86.010–18 for a limited time if all the following conditions apply:

(A) Unusual circumstances that are clearly outside the manufacturer's control prevent compliance with the requirements of this §86.010–18.

(B) The manufacturer exercised prudent planning and was not able to avoid the violation and has taken all reasonable steps to minimize the extent of the nonconformity.

(C) No other allowances are available under the regulations in this chapter to avoid the impending violation.

(ii) To apply for an exemption, the manufacturer must send to the Administrator a written request as soon as possible before being in violation. In the request, the manufacturer must show that all the conditions and requirements of paragraph (a)(6)(i) of this section are met.

(iii) The request must also include a plan showing how all the applicable requirements will be met as quickly as possible.

(iv) The manufacturer shall give the Administrator other relevant information upon request.

(v) The Administrator may include additional conditions on an approval

granted under the provisions of this paragraph (a)(6), including provisions that may require field repair at the manufacturer's expense to correct the noncompliance.

(vi) Engines sold as non-compliant under this temporary hardship provision must display ''non-OBD'' in the data stream as required under paragraph (k)(4)(ii) of this section. Upon correcting the noncompliance, the data stream value must be updated accordingly.

(b) *Malfunction indicator light (MIL) and Diagnostic Trouble Codes (DTC).* The OBD system must incorporate a malfunction indicator light (MIL) or equivalent and must store specific types of diagnostic trouble codes (DTC). Unless otherwise specified, all provisions of this paragraph (b) apply for 2010 and later model years.

(1) *MIL specifications.* (i) For model years 2013 and later, the MIL must be located on the primary driver's side instrument panel and be of sufficient illumination and location to be readily visible under all lighting conditions. The MIL must be amber (yellow) in color; the use of red for the OBD-related MIL is prohibited. More than one general purpose malfunction indicator light for emission-related problems shall not be used; separate specific purpose warning lights (e.g., brake system, fasten seat belt, oil pressure, etc.) are permitted. When activated, the MIL shall display the International Standards Organization (ISO) engine symbol.

(ii) The OBD system must activate the MIL when the ignition is in the key-on/engine-off position before engine cranking to indicate that the MIL is functional. The MIL shall be activated continuously during this functional check for a minimum of 5 seconds. During this MIL key-on functional check, the data stream value (see paragraph (k)(4)(ii) of this section) for MIL status must indicate ''commanded off'' unless the OBD system has detected a malfunction and has stored a MIL-on DTC. This MIL key-on functional check is not required during vehicle operation in the key-on/engine-off position subsequent to the initial engine cranking of an ignition cycle (e.g., due to an engine stall or other non-commanded engine shutoff).

(iii) As an option, the MIL may be used to indicate readiness status (see paragraph (k)(4)(i) of this section) in a standardized format in the key-on/engine-off position.

(iv) A manufacturer may also use the MIL to indicate which, if any, DTCs are currently stored (e.g., to ''blink'' the stored DTCs). Such use must not activate unintentionally during routine driver operation.

(v) For model years 2013 and later, the MIL required by this paragraph (b) must not be used in any other way than is specified in this section.

(2) *MIL activation and DTC storage protocol.* (i) Within 10 seconds of detecting a potential malfunction, the OBD system must store a pending DTC that identifies the potential malfunction.

(ii) If the potential malfunction is again detected before the end of the next drive cycle during which monitoring occurs (i.e., the potential malfunction has been confirmed as a malfunction), then within 10 seconds of such detection the OBD system must activate the MIL continuously and store a MIL-on DTC (systems using the SAE J1939 standard protocol specified in paragraph (k)(1) of this section may either erase or retain the pending DTC in conjunction with storing the MIL-on DTC). If the potential malfunction is not detected before the end of the next drive cycle during which monitoring occurs (i.e., there is no indication of the malfunction at any time during the drive cycle), the corresponding pending DTC should be erased at the end of the drive cycle. Similarly, if a malfunction is detected for the first time and confirmed on a given drive cycle without need for further evaluation, then within 10 seconds of such detection the OBD system must activate the MIL continuously and store a MIL-on DTC (again, systems using the SAE J1939 standard protocol specified in paragraph (k)(1) of this section may optionally store a pending DTC in conjunction with storing the MIL-on DTC).

(iii) A manufacturer may request Administrator approval to employ alternative statistical MIL activation and DTC storage protocols to those specified in paragraphs (b)(2)(i) and (b)(2)(ii) of this section. Approval will depend upon the manufacturer providing data

and/or engineering evaluations that demonstrate that the alternative protocols can evaluate system performance and detect malfunctions in a manner that is equally effective and timely. Strategies requiring on average more than six drive cycles for MIL activation will not be accepted.

(iv) The OBD system must store a ''freeze frame'' of the operating conditions (as defined in paragraph (k)(4)(iii) of this section) present upon detecting a malfunction or a potential malfunction. In the event that a pending DTC has matured to a MIL-on DTC, the manufacturer shall either retain the currently stored freeze frame conditions or replace the stored freeze frame with freeze frame conditions regarding the MIL-on DTC. Any freeze frame stored in conjunction with any pending DTC or MIL-on DTC should be erased upon erasure of the corresponding DTC.

(v) If the engine enters a limp-home mode of operation that can affect emissions or the performance of the OBD system, or in the event of a malfunction of an onboard computer(s) itself that can affect the performance of the OBD system, the OBD system must activate the MIL and store a MIL-on DTC within 10 seconds to inform the vehicle operator. If the limp-home mode of operation is recoverable (i.e., operation automatically returns to normal at the beginning of the following ignition cycle), the OBD system may wait to activate the MIL and store the MIL-on DTC if the limp-home mode of operation is again entered before the end of the next ignition cycle rather than activating the MIL within 10 seconds on the first drive cycle during which the limp-home mode of operation is entered.

(vi) Before the end of an ignition cycle, the OBD system must store a permanent DTC(s) that corresponds to any stored MIL-on DTC(s).

(3) *MIL deactivation and DTC erasure protocol*—(i) *Deactivating the MIL.* Except as otherwise provided for in paragraphs (g)(2)(iv)(E) and (g)(6)(iv)(B) of this section for diesel misfire malfunctions and empty reductant tanks, and paragraphs (h)(1)(iv)(F), (h)(2)(viii), and (h)(7)(iv)(B) of this section for gasoline fuel system, misfire, and evaporative system malfunctions, once the MIL has been activated, it may be deactivated after three subsequent sequential drive cycles during which the monitoring system responsible for activating the MIL functions and the previously detected malfunction is no longer present and provided no other malfunction has been detected that would independently activate the MIL according to the requirements outlined in paragraph (b)(2) of this section.

(ii) *Erasing a MIL-on DTC.* The OBD system may erase a MIL-on DTC if the identified malfunction has not again been detected in at least 40 engine warm up cycles and the MIL is presently not activated for that malfunction. The OBD system may also erase a MIL-on DTC upon deactivating the MIL according to paragraph (b)(3)(i) of this section provided a previous-MIL-on DTC is stored upon erasure of the MIL-on DTC. The OBD system may erase a previous-MIL-on DTC if the identified malfunction has not again been detected in at least 40 engine warm up cycles and the MIL is presently not activated for that malfunction.

(iii) *Erasing a permanent DTC.* The OBD system can erase a permanent DTC only if:

(A) The OBD system itself determines that the malfunction that caused the corresponding permanent DTC to be stored is no longer present and is not commanding activation of the MIL, concurrent with the requirements of paragraph (b)(3)(i) of this section which, for purposes of this paragraph (b)(3)(iii), shall apply to all monitors.

(B) All externally erasable DTC information stored in the onboard computer has been erased (i.e., through the use of a scan tool or battery disconnect) and the monitor of the malfunction that caused the permanent DTC to be stored is subject to the minimum ratio requirements of paragraph (d) of this section, the OBD system shall erase the permanent DTC at the end of a drive cycle if the monitor has run and made one or more determinations during a drive cycle that the malfunction of the component or the system is not present and has not made any determinations within the same

drive cycle that the malfunction is present.

(C)(1) All externally erasable DTC information stored in the onboard computer has been erased (i.e., through the use of a scan tool or battery disconnect) and the monitor of the malfunction that caused the permanent DTC to be stored is not subject to the minimum ratio requirements of paragraph (d) of this section, the OBD system shall erase the permanent DTC at the end of a drive cycle provided the following two criteria have independently been satisfied:

(i) The monitor has run and made one or more determinations during a drive cycle that the malfunction is no longer present and has not made any determinations within the same drive cycle that the malfunction is present; and,

(ii) The monitor does not detect a malfunction on a drive cycle and the criteria of paragraph (d)(4)(ii) of this section has been met.

(2) These two separate criteria may be met on the same or different drive cycles provided the monitor never detects a malfunction during either drive cycle, and if criteria (b)(3)(iii)(C)(*1*)(*i*) happens first then no malfunction may be detected before criteria (b)(3)(iii)(C)(*1*)(*ii*) occurs. If a malfunction occurs after criteria (b)(3)(iii)(C)(*1*)(*i*) then criteria (b)(3)(iii)(C)(*1*)(*i*) must be satisfied again. For the second criterion, the manufacturer must exclude any temperature and/or elevation provisions of paragraph (d)(4)(ii) of this section. For this paragraph (b)(3)(iii)(C), monitors required to use ''similar conditions'' as defined in § 86.010–2 to store and erase pending and MIL-on DTCs cannot require that the similar conditions be met prior to erasure of the permanent DTC.

(D) The Administrator shall allow monitors subject to paragraph (b)(3)(iii)(B) of this section to use the criteria of paragraph (b)(3)(iii)(C) of this section in lieu of paragraph (b)(3)(iii)(B). Further, manufacturers may request Administrator approval to use alternative criteria to erase the permanent DTC. The Administrator shall approve alternate criteria that will not likely require driving conditions that are longer and more difficult to meet than those required under paragraph (b)(3)(iii)(C) of this section and do not require access to enhanced scan tools to determine conditions necessary to erase the permanent DTC.

(4) *Exceptions to MIL and DTC requirements.* (i) If a limp-home mode of operation causes a overt indication (e.g., activation of a red engine shut-down warning light) such that the driver is certain to respond and have the problem corrected, a manufacturer may choose not to activate the MIL as required by paragraph (b)(2)(v) of this section. Additionally, if an auxiliary emission control device has been properly activated as approved by the Administrator, a manufacturer may choose not to activate the MIL.

(ii) For gasoline engines, a manufacturer may choose to meet the MIL and DTC requirements in § 86.007–17 in lieu of meeting the requirements of paragraph (b) of this § 86.010–18.

(c) *Monitoring conditions.* The OBD system must monitor and detect the malfunctions specified in paragraphs (g), (h), and (i) of this section under the following general monitoring conditions. The more specific monitoring conditions of paragraph (d) of this section are sometimes required according to the provisions of paragraphs (g), (h), and (i) of this section.

(1) As specifically provided for in paragraphs (g), (h), and (i) of this section, the monitoring conditions for detecting malfunctions must be technically necessary to ensure robust detection of malfunctions (e.g., avoid false passes and false indications of malfunctions); designed to ensure monitoring will occur under conditions that may reasonably be expected to be encountered in normal vehicle operation and normal vehicle use; and, designed to ensure monitoring will occur during the FTP transient test cycle contained in appendix I paragraph (f), of this part, or similar drive cycle as approved by the Administrator.

(2) Monitoring must occur at least once per drive cycle in which the monitoring conditions are met.

(3) Manufacturers may define monitoring conditions that are not encountered during the FTP cycle as required in paragraph (c)(1) of this section. In doing so, the manufacturer would be

expected to consider the degree to which the requirement to run during the FTP transient cycle restricts monitoring during in-use operation, the technical necessity for defining monitoring conditions that are not encountered during the FTP cycle, whether monitoring is otherwise not feasible during the FTP cycle, and/or the ability to demonstrate that the monitoring conditions satisfy the minimum acceptable in-use monitor performance ratio requirement as defined in paragraph (d) of this section.

(d) *In-use performance tracking.* As specifically required in paragraphs (g), (h), and (i) of this section, the OBD system must monitor and detect the malfunctions specified in paragraphs (g), (h), and (i) of this section according to the criteria of this paragraph (d). The OBD system is not required to track and report in-use performance for monitors other than those specifically identified in paragraph (d)(1) of this section, but all monitors on applicable model year engines are still required to meet the in-use performance ratio as specified in paragraph (d)(1)(ii) of this section.

(1) The manufacturer must implement software algorithms in the OBD system to individually track and report the in-use performance of the following monitors, if equipped, in the standardized format specified in paragraph (e) of this section: NMHC converting catalyst (paragraph (g)(5) of this section); NO_X converting catalyst (paragraph (g)(6) of this section); gasoline catalyst (paragraph (h)(6) of this section); exhaust gas sensor (paragraph (g)(9) of this section) or paragraph (h)(8) of this section); evaporative system (paragraph (h)(7) of this section); EGR system (paragraph (g)(3) of this section or (h)(3) of this section); VVT system (paragraph (g)(10) of this section or (h)(9) of this section); secondary air system (paragraph (h)(5) of this section); DPF system (paragraph (g)(8) of this section); boost pressure control system (paragraph (g)(4) of this section); and, NO_X adsorber system (paragraph (g)(7) of this section).

(i) The manufacturer shall not use the calculated ratio specified in paragraph (d)(2) of this section or any other indication of monitor frequency as a monitoring condition for a monitor (e.g., using a low ratio to enable more frequent monitoring through diagnostic executive priority or modification of other monitoring conditions, or using a high ratio to enable less frequent monitoring).

(ii) For model years 2013 and later, manufacturers must define monitoring conditions that, in addition to meeting the criteria in paragraphs (c)(1) and (d)(1) of this section, ensure that the monitor yields an in-use performance ratio (as defined in paragraph (d)(2) of this section) that meets or exceeds the minimum acceptable in-use monitor performance ratio of 0.100 for all monitors specifically required in paragraphs (g), (h), and (i) of this section to meet the monitoring condition requirements of this paragraph (d).

(iii) If the most reliable monitoring method developed requires a lower ratio for a specific monitor than that specified in paragraph (d)(1)(ii) of this section, the Administrator may lower the minimum acceptable in-use monitoring performance ratio.

(2) *In-use performance ratio definition.* For monitors required to meet the requirements of paragraph (d) of this section, the performance ratio must be calculated in accordance with the specifications of this paragraph (d)(2).

(i) The numerator of the performance ratio is defined as the number of times a vehicle has been operated such that all monitoring conditions have been encountered that are necessary for the specific monitor to detect a malfunction.

(ii) The denominator is defined as the number of times a vehicle has been operated in accordance with the provisions of paragraph (d)(4) of this section.

(iii) The performance ratio is defined as the numerator divided by the denominator.

(3) *Specifications for incrementing the numerator.* (i) Except as provided for in paragraph (d)(3)(v) of this section, the numerator, when incremented, must be incremented by an integer of one. The numerator shall not be incremented more than once per drive cycle.

(ii) The numerator for a specific monitor must be incremented within 10

seconds if and only if the following criteria are satisfied on a single drive cycle:

(A) Every monitoring condition has been satisfied that is necessary for the specific monitor to detect a malfunction and store a pending DTC, including applicable enable criteria, presence or absence of related DTCs, sufficient length of monitoring time, and diagnostic executive priority assignments (e.g., diagnostic ''A'' must execute prior to diagnostic ''B''). For the purpose of incrementing the numerator, satisfying all the monitoring conditions necessary for a monitor to determine that the monitor is not malfunctioning shall not, by itself, be sufficient to meet this criteria.

(B) For monitors that require multiple stages or events in a single drive cycle to detect a malfunction, every monitoring condition necessary for all events to complete must be satisfied.

(C) For monitors that require intrusive operation of components to detect a malfunction, a manufacturer must request approval of the strategy used to determine that, had a malfunction been present, the monitor would have detected the malfunction. Administrator approval of the request will be based on the equivalence of the strategy to actual intrusive operation and the ability of the strategy to determine accurately if every monitoring condition was satisfied that was necessary for the intrusive event to occur.

(D) For the secondary air system monitor, the criteria in paragraphs (d)(3)(ii)(A) through (d)(3)(ii)(C) of this section are satisfied during normal operation of the secondary air system. Monitoring during intrusive operation of the secondary air system later in the same drive cycle for the sole purpose of monitoring shall not, by itself, be sufficient to meet these criteria.

(iii) For monitors that can generate results in a ''gray zone'' or ''non-detection zone'' (i.e., monitor results that indicate neither a properly operating system nor a malfunctioning system) or in a ''non-decision zone'' (e.g., monitors that increment and decrement counters until a pass or fail threshold is reached), the numerator, in general, shall not be incremented when the monitor indicates a result in the ''non-detection zone'' or prior to the monitor reaching a complete decision. When necessary, the Administrator will consider data and/or engineering analyses submitted by the manufacturer demonstrating the expected frequency of results in the ''non-detection zone'' and the ability of the monitor to determine accurately, had an actual malfunction been present, whether or not the monitor would have detected a malfunction instead of a result in the ''non-detection zone.''

(iv) For monitors that run or complete their evaluation with the engine off, the numerator must be incremented either within 10 seconds of the monitor completing its evaluation in the engine off state, or during the first 10 seconds of engine start on the subsequent drive cycle.

(v) Manufacturers that use alternative statistical MIL activation protocols as allowed in paragraph (b)(2)(iii) of this section for any of the monitors requiring a numerator, are required to increment the numerator(s) appropriately. The manufacturer may be required to provide supporting data and/or engineering analyses demonstrating both the equivalence of their incrementing approach to the incrementing specified in this paragraph (d)(3) for monitors using the standard MIL activation protocol, and the overall equivalence of the incrementing approach in determining that the minimum acceptable in-use performance ratio of paragraph (d)(1)(ii) of this section, if applicable, has been satisfied.

(4) *Specifications for incrementing the denominator*. (i) The denominator, when incremented, must be incremented by an integer of one. The denominator shall not be incremented more than once per drive cycle.

(ii) The denominator for each monitor must be incremented within 10 seconds if and only if the following criteria are satisfied on a single drive cycle:

(A) Cumulative time since the start of the drive cycle is greater than or equal to 600 seconds while at an elevation of less than 8,000 feet (2,400 meters) above sea level and at an ambient temperature of greater than or equal to 20 degrees Fahrenheit (−7 C);

(B) Cumulative gasoline engine operation at or above 25 miles per hour or diesel engine operation at or above 1,150 rotations per minute (diesel engines may use the gasoline criterion for 2010 through 2012 model years), either of which occurs for greater than or equal to 300 seconds while at an elevation of less than 8,000 feet (2,400 meters) above sea level and at an ambient temperature of greater than or equal to 20 degrees Fahrenheit (−7 C); and,

(C) Continuous engine operation at idle (e.g., accelerator pedal released by driver and engine speed less than or equal to 200 rpm above normal warmed-up idle (as determined in the drive position for vehicles equipped with an automatic transmission) or vehicle speed less than or equal to one mile per hour) for greater than or equal to 30 seconds while at an elevation of less than 8,000 feet (2,400 meters) above sea level and at an ambient temperature of greater than or equal to 20 degrees Fahrenheit (−7 C).

(iii) In addition to the requirements of paragraph (d)(4)(ii) of this section, the evaporative system monitor denominator(s) may be incremented if and only if:

(A) Cumulative time since the start of the drive cycle is greater than or equal to 600 seconds while at an ambient temperature of greater than or equal to 40 degrees Fahrenheit (4 C) but less than or equal to 95 degrees Fahrenheit (35 C); and,

(B) Engine cold start occurs with the engine coolant temperature greater than or equal to 40 degrees Fahrenheit (4 C) but less than or equal to 95 degrees Fahrenheit (35 C) and less than or equal to 12 degrees Fahrenheit (7 C) higher than the ambient temperature.

(iv) In addition to the requirements of paragraph (d)(4)(ii) of this section, the denominator(s) for the following monitors may be incremented if and only if the component or strategy is commanded ''on'' for a cumulative time greater than or equal to 10 seconds. For purposes of determining this commanded ''on'' time, the OBD system shall not include time during intrusive operation of any of the components or strategies that occurs later in the same drive cycle for the sole purpose of monitoring.

(A) Secondary air system (paragraph (h)(5) of this section).

(B) Cold start emission reduction strategy (paragraph (h)(4) of this section).

(C) Components or systems that operate only at engine start-up (e.g., glow plugs, intake air heaters) and are subject to monitoring under ''other emission control systems'' (paragraph (i)(4) of this section) or comprehensive component output components (paragraph (i)(3)(iii) of this section).

(v) In addition to the requirements of paragraph (d)(4)(ii) of this section, the denominator(s) for the following monitors of output components (except those operated only at engine start-up and subject to the requirements of paragraph (d)(4)(iv) of this section, may be incremented if and only if the component is commanded to function (e.g., commanded ''on'', ''opened'', ''closed'', ''locked'') on two or more occasions during the drive cycle or for a cumulative time greater than or equal to 10 seconds, whichever occurs first:

(A) Variable valve timing and/or control system (paragraph (g)(10) of this section or (h)(9) of this section).

(B) ''Other emission control systems'' (paragraph (i)(4) of this section).

(C) Comprehensive component output component (paragraph (i)(3) of this section) (e.g., turbocharger waste-gates, variable length manifold runners).

(vi) For monitors of the following components, the manufacturer may use alternative or additional criteria for incrementing the denominator to that set forth in paragraph (d)(4)(ii) of this section. To do so, the alternative criteria must be based on equivalence to the criteria of paragraph (d)(4)(ii) of this section in measuring the frequency of monitor operation relative to the amount of engine operation:

(A) Engine cooling system input components (paragraph (i)(1) of this section).

(B) ''Other emission control systems'' (paragraph (i)(4) of this section).

(C) Comprehensive component input components that require extended monitoring evaluation (paragraph (i)(3) of this section) (e.g., stuck fuel level sensor rationality).

(D) Comprehensive component input component temperature sensor rationality monitors (paragraph (i)(3) of this section) (e.g., intake air temperature sensor, ambient temperature sensor, fuel temperature sensor).

(E) Diesel particulate filter (DPF) frequent regeneration (paragraph (g)(8)(ii)(B) of this section).

(vii) For monitors of the following components or other emission controls that experience infrequent regeneration events, the manufacturer may use alternative or additional criteria for incrementing the denominator to that set forth in paragraph (d)(4)(ii) of this section. To do so, the alternative criteria must be based on equivalence to the criteria of paragraph (d)(4)(ii) of this section in measuring the frequency of monitor operation relative to the amount of engine operation:

(A) NMHC converting catalyst (paragraph (g)(5) of this section).

(B) Diesel particulate filter (DPF) (paragraphs (g)(8)(ii)(A) and (g)(8)(ii)(D) of this section).

(viii) In addition to the requirements of paragraph (d)(4)(ii) of this section, the denominator(s) for the following monitors shall be incremented if and only if a regeneration event is commanded for a time greater than or equal to 10 seconds:

(A) DPF incomplete regeneration (paragraph (g)(8)(ii)(C) of this section).

(B) DPF active/intrusive injection (paragraph (g)(8)(ii)(E) of this section).

(ix) For hybrids that employ alternative engine start hardware or strategies (e.g., integrated starter and generators), or alternative fuel vehicles (e.g., dedicated, bi-fuel, or dual-fuel applications), the manufacturer may use alternative criteria for incrementing the denominator to that set forth in paragraph (d)(4)(ii) of this section. In general, the Administrator will not approve alternative criteria for those hybrids that employ engine shut off only at or near idle and/or vehicle stop conditions. To use alternative criteria, the alternative criteria must be based on the equivalence to the criteria of paragraph (d)(4)(ii) of this section in measuring the amount of vehicle operation relative to the measure of conventional vehicle operation.

(5) *Disablement of numerators and denominators.* (i) Within 10 seconds of detecting a malfunction (i.e., a pending or a MIL-on DTC has been stored) that disables a monitor for which the monitoring conditions in paragraph (d) of this section must be met, the OBD system must stop incrementing the numerator and denominator for any monitor that may be disabled as a consequence of the detected malfunction. Within 10 seconds of the time at which the malfunction is no longer being detected (e.g., the pending DTC is erased through OBD system self-clearing or through a scan tool command), incrementing of all applicable numerators and denominators must resume.

(ii) Within 10 seconds of the start of a power take-off unit (e.g., dump bed, snow plow blade, or aerial bucket, etc.) that disables a monitor for which the monitoring conditions in paragraph (d) of this section must be met, the OBD system must stop incrementing the numerator and denominator for any monitor that may be disabled as a consequence of power take-off operation. Within 10 seconds of the time at which the power take-off operation ends, incrementing of all applicable numerators and denominators must resume.

(iii) Within 10 seconds of detecting a malfunction (i.e., a pending or a MIL-on DTC has been stored) of any component used to determine if the criteria of paragraphs (d)(4)(ii) and (d)(4)(iii) of this section are satisfied, the OBD system must stop incrementing all applicable numerators and denominators. Within 10 seconds of the time at which the malfunction is no longer being detected (e.g., the pending DTC is erased through OBD system self-clearing or through a scan tool command), incrementing of all applicable numerators and denominators must resume.

(e) *Standardized tracking and reporting of in-use monitor performance*—(1) *General.* For monitors required to track and report in-use monitor performance according to paragraph (d) of this section, the performance data must be tracked and reported in accordance with the specifications in paragraphs (d)(2), (e), and (k)(5) of this section. The OBD system must separately report an in-use monitor performance numerator

and denominator for each of the following components:

(i) For diesel engines, NMHC catalyst bank 1, NMHC catalyst bank 2, NO_X catalyst bank 1, NO_X catalyst bank 2, exhaust gas sensor bank 1, exhaust gas sensor bank 2, EGR/VVT system, DPF, boost pressure control system, and NO_X adsorber. The OBD system must also report a general denominator and an ignition cycle counter in the standardized format specified in paragraphs (e)(5), (e)(6), and (k)(5) of this section.

(ii) For gasoline engines, catalyst bank 1, catalyst bank 2, exhaust gas sensor bank 1, exhaust gas sensor bank 2, evaporative leak detection system, EGR/VVT system, and secondary air system. The OBD system must also report a general denominator and an ignition cycle counter in the standardized format specified in paragraphs (e)(5), (e)(6), and (k)(5) of this section.

(iii) For specific components or systems that have multiple monitors that are required to be reported under paragraphs (g) and (h) of this section (e.g., exhaust gas sensor bank 1 may have multiple monitors for sensor response or other sensor characteristics), the OBD system must separately track numerators and denominators for each of the specific monitors and report only the corresponding numerator and denominator for the specific monitor that has the lowest numerical ratio. If two or more specific monitors have identical ratios, the corresponding numerator and denominator for the specific monitor that has the highest denominator must be reported for the specific component.

(2) *Numerator*. (i) The OBD system must report a separate numerator for each of the applicable components listed in paragraph (e)(1) of this section.

(ii) The numerator(s) must be reported in accordance with the specifications in paragraph (k)(5)(ii) of this section.

(3) *Denominator*. (i) The OBD system must report a separate denominator for each of the applicable components listed in paragraph (e)(1) of this section.

(ii) The denominator(s) must be reported in accordance with the specifications in paragraph (k)(5)(ii) of this section.

(4) *Monitor performance ratio*. For purposes of determining which corresponding numerator and denominator to report as required in paragraph (e)(1)(iii) of this section, the ratio must be calculated in accordance with the specifications in paragraph (k)(5)(iii) of this section.

(5) *Ignition cycle counter*. (i) The ignition cycle counter is defined as a counter that indicates the number of ignition cycles a vehicle has experienced according to the specifications of paragraph (e)(5)(ii)(B) of this section. The ignition cycle counter must be reported in accordance with the specifications in paragraph (k)(5)(ii) of this section.

(ii) The ignition cycle counter must be incremented as follows:

(A) The ignition cycle counter, when incremented, must be incremented by an integer of one. The ignition cycle counter shall not be incremented more than once per ignition cycle.

(B) The ignition cycle counter must be incremented within 10 seconds if and only if the engine exceeds an engine speed of 50 to 150 rpm below the normal, warmed-up idle speed (as determined in the drive position for engines paired with an automatic transmission) for at least two seconds plus or minus one second.

(iii) Within 10 seconds of detecting a malfunction (i.e., a pending or a MIL-on DTC has been stored) of any component used to determine if the criteria in paragraph (e)(5)(ii)(B) of this section are satisfied (i.e., engine speed or time of operation), the OBD system must stop incrementing the ignition cycle counter. Incrementing of the ignition cycle counter shall not be stopped for any other condition. Within 10 seconds of the time at which the malfunction is no longer being detected (e.g., the pending DTC is erased through OBD system self-clearing or through a scan tool command), incrementing of the ignition cycle counter must resume.

(6) *General denominator*. (i) The general denominator is defined as a measure of the number of times an engine has been operated according to the specifications of paragraph (e)(6)(ii)(B) of this section. The general denominator must be reported in accordance

with the specifications in paragraph (k)(5)(ii) of this section.

(ii) The general denominator must be incremented as follows:

(A) The general denominator, when incremented, must be incremented by an integer of one. The general denominator shall not be incremented more than once per drive cycle.

(B) The general denominator must be incremented within 10 seconds if and only if the criteria identified in paragraph (d)(4)(ii) of this section are satisfied on a single drive cycle.

(C) Within 10 seconds of detecting a malfunction (i.e., a pending or a MIL-on DTC has been stored) of any component used to determine if the criteria in paragraph (d)(4)(ii) of this section are satisfied (i.e., vehicle speed/load, ambient temperature, elevation, idle operation, or time of operation), the OBD system must stop incrementing the general denominator. Incrementing of the general denominator shall not be stopped for any other condition (e.g., the disablement criteria in paragraphs (d)(5)(i) and (d)(5)(ii) of this section shall not disable the general denominator). Within 10 seconds of the time at which the malfunction is no longer being detected (e.g., the pending DTC is erased through OBD system self-clearing or through a scan tool command), incrementing of the general denominator must resume.

(f) *Malfunction criteria determination.* (1) In determining the malfunction criteria for the diesel engine monitors required under paragraphs (g) and (i) of this section that are required to indicate a malfunction before emissions exceed an emission threshold based on any applicable standard, the manufacturer must:

(i) Use the emission test cycle and standard (i.e., the transient FTP or the supplemental emissions test (SET)) determined by the manufacturer to provide the most effective monitoring conditions and robust monitor provided all other applicable requirements of this section are met.

(ii) Identify in the certification documentation required under paragraph (m) of this section, the test cycle and standard determined by the manufacturer to be the most stringent for each applicable monitor and the most effective and robust for each applicable monitor.

(iii) If the Administrator reasonably believes that a manufacturer has determined incorrectly the test cycle and standard that is most stringent or effective, the manufacturer must be able to provide emission data and/or engineering analysis supporting their choice of test cycle and standard.

(2) On engines equipped with emission controls that experience infrequent regeneration events, a manufacturer need not adjust the emission test results that are used to determine the malfunction criteria for monitors that are required to indicate a malfunction before emissions exceed a certain emission threshold. For each such monitor, should the manufacturer choose to adjust the emission test results, the manufacturer must adjust the emission result as done in accordance with the provisions of § 86.004–28(i) with the component for which the malfunction criteria are being established having been deteriorated to the malfunction threshold. The adjusted emission value must be used for purposes of determining whether or not the applicable emission threshold is exceeded.

(i) For purposes of this paragraph (f)(2), regeneration means an event, by design, during which emissions levels change while the emission control performance is being restored.

(ii) For purposes of this paragraph (f)(2), infrequent means having an expected frequency of less than once per transient FTP cycle.

(3) For gasoline engines, rather than meeting the malfunction criteria specified under paragraphs (h) and (i) of this section, the manufacturer may request approval to use an OBD system certified to the requirements of § 86.007–17. To do so, the manufacturer must demonstrate use of good engineering judgment in determining equivalent malfunction detection criteria to those required in this section.

(g) *OBD monitoring requirements for diesel-fueled/compression-ignition engines.* The following table shows the thresholds at which point certain components or systems, as specified in this paragraph (g), are considered malfunctioning.

TABLE 1—OBD EMISSIONS THRESHOLDS FOR DIESEL-FUELED/COMPRESSION-IGNITION ENGINES MEANT FOR PLACEMENT IN APPLICATIONS GREATER THAN 14,000 POUNDS GVWR (G/BHP-HR)

Component	§ 86.010–18 reference	NMHC	CO	NO_X	PM
Model years 2010–2012:					
NO_X aftertreatment system	(g)(6) (g)(7)			+ 0.6	
Diesel particulate filter (DPF) system	(g)(8)	2.5x			0.05/ + 0.04
Air-fuel ratio sensors upstream of aftertreatment devices	(g)(9)	2.5x	2.5x	+ 0.3	0.03/ + 0.02
Air-fuel ratio sensors downstream of aftertreatment devices	(g)(9)	2.5x		+ 0.3	0.05/ + 0.04
NO_X sensors	(g)(9)			+ 0.6	0.05/ + 0.04
''Other monitors'' with emissions thresholds	(g)(1) (g)(3) (g)(4) (g)(10)	2.5x	2.5x	+ 0.3	0.03/ + 0.02
Model years 2013 and later:					
NO_X aftertreatment system	(g)(6) (g)(7)			+ 0.3	
Diesel particulate filter (DPF) system	(g)(8)	2x			0.05/ + 0.04
Air-fuel ratio sensors upstream of aftertreatment devices	(g)(9)	2x	2x	+ 0.3	0.03/ + 0.02
Air-fuel ratio sensors downstream of aftertreatment devices	(g)(9)	2x		+ 0.3	0.05/ + 0.04
NO_X sensors	(g)(9)			+ 0.3	0.05/ + 0.04
''Other monitors'' with emissions thresholds	(g)(1) (g)(2) (g)(3) (g)(4) (g)(10)	2x	2x	+ 0.3	0.03/ + 0.02

Notes: FEL = Family Emissions Limit; 2.5x std means a multiple of 2.5 times the applicable emissions standard; + 0.3 means the standard or FEL plus 0.3; 0.05/ + 0.04 means an absolute level of 0.05 or an additive level of the standard or FEL plus 0.04, whichever level is higher; these emissions thresholds apply to the monitoring requirements of paragraph (g) of this § 86.010–18.

(1) *Fuel system monitoring*—(i) *General*. The OBD system must monitor the fuel delivery system to verify that it is functioning properly. The individual electronic components (e.g., actuators, valves, sensors, pumps) that are used in the fuel system and are not specifically addressed in this paragraph (g)(1) must be monitored in accordance with the requirements of paragraph (i)(3) of this section.

(ii) *Fuel system malfunction criteria*—(A) *Fuel system pressure control*. The OBD system must monitor the fuel system's ability to control to the desired fuel pressure. This monitoring must be done continuously unless new hardware has to be added, in which case the monitoring must be done at least once per drive cycle. The OBD system must detect a malfunction of the fuel system's pressure control system when the pressure control system is unable to maintain an engine's emissions at or below the emissions thresholds for ''other monitors'' as shown in Table 1 of this paragraph (g). For engines in which no failure or deterioration of the fuel system pressure control could result in an engine's emissions exceeding the applicable emissions thresholds, the OBD system must detect a malfunction when the system has reached its control limits such that the commanded fuel system pressure cannot be delivered. For model year 2010 to 2012 engines with a unit injector fuel system, this requirement may be met by conducting a functional check of the fuel system pressure control in lieu of monitoring for conditions that could cause an engine's emissions to exceed the applicable emissions thresholds.

(B) *Fuel system injection quantity*. The OBD system must detect a malfunction of the fuel injection system when the system is unable to deliver the commanded quantity of fuel necessary to maintain an engine's emissions at or below the emissions thresholds for ''other monitors'' as shown in Table 1 of this paragraph (g). For engines in which no failure or deterioration of the fuel injection quantity could result in an engine's emissions exceeding the applicable emissions thresholds, the OBD system must detect a malfunction when the system has reached its control limits such that the commanded fuel quantity cannot be delivered. For model year 2010 to 2012 engines with a unit injector fuel system, this requirement may be met by conducting a

functional check of the fuel system injection quantity in lieu of monitoring for conditions that could cause an engine's emissions to exceed the applicable emissions thresholds.

(C) *Fuel system injection timing.* The OBD system must detect a malfunction of the fuel injection system when the system is unable to deliver fuel at the proper crank angle/timing (e.g., injection timing too advanced or too retarded) necessary to maintain an engine's emissions at or below the emissions thresholds for ''other monitors'' as shown in Table 1 of this paragraph (g). For engines in which no failure or deterioration of the fuel injection timing could result in an engine's emissions exceeding the applicable emissions thresholds, the OBD system must detect a malfunction when the system has reached its control limits such that the commanded fuel injection timing cannot be achieved. For model year 2010 to 2012 engines with a unit injector fuel system, this requirement may be met by conducting a functional check of the fuel system injection timing in lieu of monitoring for conditions that could cause an engine's emissions to exceed the applicable emissions thresholds.

(D) *Combined Monitoring.* For engines with a unit injector fuel system, the manufacturer may request Administrator approval to combine the malfunction criteria of paragraphs (g)(1)(ii)(A) through (g)(1)(ii)(C) of this section into one malfunction provided the manufacturer can demonstrate that the combined malfunction will satisfy the intent of each separate malfunction criteria. For engines with a common rail fuel system, the manufacturer may request Administrator approval to combine the malfunction criteria of paragraphs (g)(1)(ii)(B) through (g)(1)(ii)(C) of this section into one malfunction provided the manufacturer can demonstrate that the combined malfunction will satisfy the intent of each separate malfunction criteria.

(E) *Fuel system feedback control.* See paragraph (i)(6) of this section.

(iii) *Fuel system monitoring conditions.* (A) With the exceptions noted in this paragraph for unit injector systems, the OBD system must monitor continuously for malfunctions identified in paragraphs (g)(1)(ii)(A) and (g)(1)(ii)(E) of this section. For 2010 through 2012 unit injector systems, where functional monitoring is done in lieu of emission threshold monitoring for malfunctions identified in paragraph (g)(1)(ii)(A) of this section, the manufacturer must define the monitoring conditions in accordance with paragraphs (c) and (d) of this section. For 2013 and later unit injector systems, the manufacturer must define the monitoring conditions for malfunctions identified in paragraph (g)(1)(ii)(A) of this section in accordance with paragraphs (c) and (d) of this section, with the exception that monitoring must occur every time the monitoring conditions are met during the drive cycle rather than once per drive cycle as required in paragraph (c)(2) of this section.

(B) For 2010 through 2012, the manufacturer must define the monitoring conditions for malfunctions identified in paragraphs (g)(1)(ii)(B), (g)(1)(ii)(C), and (g)(1)(ii)(D) of this section in accordance with paragraphs (c) and (d) of this section. For 2013 and later, the manufacturer must define the monitoring conditions in accordance with paragraphs (c) and (d) of this section, with the exception that monitoring must occur every time the monitoring conditions are met during the drive cycle rather than once per drive cycle as required in paragraph (c)(2) of this section.

(iv) *Fuel system MIL activation and DTC storage.* The MIL must activate and DTCs must be stored according to the provisions of paragraph (b) of this section.

(2) *Engine misfire monitoring*—(i) *General.* The OBD system must monitor the engine for misfire causing excess emissions.

(ii) *Engine misfire malfunction criteria.* (A) The OBD system must be capable of detecting misfire occurring in one or more cylinders. To the extent possible without adding hardware for this specific purpose, the OBD system must also identify the specific misfiring cylinder. If more than one cylinder is misfiring continuously, or if more than one but less than half of the cylinders are misfiring continuously (if the manufacturer can demonstrate the

robustness of their monitor to the approval of the Administrator), a separate DTC must be stored indicating that multiple cylinders are misfiring. When identifying multiple cylinder misfire, the OBD system is not required to identify individually through separate DTCs each of the continuously misfiring cylinders.

(B) For model years 2013 and later, on engines equipped with sensors that can detect combustion or combustion quality (e.g., for use in engines with homogeneous charge compression ignition (HCCI) control systems), the OBD system must detect a misfire malfunction causing emissions to exceed the applicable thresholds for ''other monitors'' shown in Table 1 of this paragraph (g). To determine what level of misfire would cause emissions to exceed the applicable emissions thresholds, the manufacturer must determine the percentage of misfire evaluated in 1,000 revolution increments that would cause emissions from an emission durability demonstration engine to exceed the emissions thresholds if the percentage of misfire were present from the beginning of the test. To establish this percentage of misfire, the manufacturer must use misfire events occurring at equally spaced, complete engine cycle intervals, across randomly selected cylinders throughout each 1,000-revolution increment. If this percentage of misfire is determined to be lower than one percent, the manufacturer may set the malfunction criteria at one percent. Any misfire malfunction must be detected if the percentage of misfire established via this testing is exceeded regardless of the pattern of misfire events (e.g., random, equally spaced, continuous). The manufacturer may employ other revolution increments besides the 1,000 revolution increment. To do so, the manufacturer must demonstrate that the strategy is equally effective and timely in detecting misfire.

(iii) *Engine misfire monitoring conditions.* (A) The OBD system must monitor for engine misfire during engine idle conditions at least once per drive cycle in which the monitoring conditions for misfire are met. The manufacturer must be able to demonstrate via engineering analysis and/or data that the self-defined monitoring conditions: are technically necessary to ensure robust detection of malfunctions (e.g., avoid false passes and false detection of malfunctions); require no more than 1000 cumulative engine revolutions; and, do not require any single continuous idle operation of more than 15 seconds to make a determination that a malfunction is present (e.g., a decision can be made with data gathered during several idle operations of 15 seconds or less); or, satisfy the requirements of paragraph (c) of this section with alternative engine operating conditions.

(B) Manufacturers may employ alternative monitoring conditions (e.g., off-idle) provided the manufacturer is able to demonstrate that the alternative monitoring ensure equivalent robust detection of malfunctions and equivalent timeliness in detection of malfunctions.

(C) For model years 2013 and later, on engines equipped with sensors that can detect combustion or combustion quality the OBD system must monitor continuously for engine misfire under all positive torque engine speed and load conditions. If a monitoring system cannot detect all misfire patterns under all required engine speed and load conditions, the manufacturer may request that the Administrator approve the monitoring system nonetheless. In evaluating the manufacturer's request, the Administrator will consider the following factors: the magnitude of the region(s) in which misfire detection is limited; the degree to which misfire detection is limited in the region(s) (i.e., the probability of detection of misfire events); the frequency with which said region(s) are expected to be encountered in-use; the type of misfire patterns for which misfire detection is troublesome; and demonstration that the monitoring technology employed is not inherently incapable of detecting misfire under required conditions (i.e., compliance can be achieved on other engines). The evaluation will be based on the following misfire patterns: equally spaced misfire occurring on randomly selected cylinders; single cylinder continuous misfire; and, paired cylinder (cylinders firing at the same crank angle) continuous misfire.

(iv) *Engine misfire MIL activation and DTC storage.* (A) General requirements for MIL activation and DTC storage are set forth in paragraph (b) of this section.

(B) For model years 2013 and later, on engines equipped with sensors that can detect combustion or combustion quality, upon detection of the percentage of misfire specified in paragraph (g)(2)(ii)(B) of this section, the following criteria shall apply for MIL activation and DTC storage: A pending DTC must be stored no later than after the fourth exceedance of the percentage of misfire specified in paragraph (g)(2)(ii) of this section during a single drive cycle; if a pending fault code has been stored, the OBD system must activate the MIL and store a MIL-on DTC within 10 seconds if the percentage of misfire specified in paragraph (g)(2)(ii) of this section is again exceeded four times during the drive cycle immediately following storage of the pending DTC, regardless of the conditions encountered during the drive cycle, or on the next drive cycle in which similar conditions are encountered to those that were occurring when the pending DTC was stored. Similar conditions means an engine speed within 375 rpm, engine load within 20 percent, and the same warm up status (i.e., cold or hot). The Administrator may approve other definitions of similar conditions based on comparable timeliness and reliability in detecting similar engine operation. The pending DTC may be erased at the end of the next drive cycle in which similar conditions are encountered to those that were occurring when the pending DTC was stored provided the specified percentage of misfire was not again exceeded. The pending DTC may also be erased if similar conditions are not encountered during the 80 drive cycles immediately following initial detection of the malfunction.

(C) For model years 2013 and later, on engines equipped with sensors that can detect combustion or combustion quality, the OBD system must store and erase freeze frame conditions either in conjunction with storing and erasing a pending DTC or in conjunction with storing and erasing a MIL-on DTC. If freeze frame conditions are stored for a malfunction other than a misfire malfunction when a DTC is stored as specified in paragraph (g)(2)(iv)(B) of this section, the stored freeze frame information must be replaced with the freeze frame information regarding the misfire malfunction.

(D) For model years 2013 and later, on engines equipped with sensors that can detect combustion or combustion quality, upon detection of misfire according to paragraph (g)(2)(iv)(B) of this section, the OBD system must also store the following engine conditions: engine speed, load, and warm up status of the first misfire event that resulted in the storage of the pending DTC.

(E) For model years 2013 and later, on engines equipped with sensors that can detect combustion or combustion quality, the MIL may be deactivated after three sequential drive cycles in which similar conditions have been encountered without an exceedance of the specified percentage of misfire.

(3) *EGR system monitoring*—(i) *General.* The OBD system must monitor the EGR system on engines so equipped for low flow rate, high flow rate, and slow response malfunctions. For engines equipped with EGR coolers (e.g., heat exchangers), the OBD system must monitor the cooler for insufficient cooling malfunctions. The individual electronic components (e.g., actuators, valves, sensors) that are used in the EGR system must be monitored in accordance with the comprehensive component requirements in paragraph (i)(3) of this section.

(ii) *EGR system malfunction criteria*—(A) *EGR low flow.* The OBD system must detect a malfunction of the EGR system prior to a decrease from the manufacturer's specified EGR flow rate that would cause an engine's emissions to exceed the emissions thresholds for ''other monitors'' as shown in Table 1 of this paragraph (g). For engines in which no failure or deterioration of the EGR system that causes a decrease in flow could result in an engine's emissions exceeding the applicable emissions thresholds, the OBD system must detect a malfunction when the system has reached its control limits such that it cannot increase EGR flow to achieve the commanded flow rate.

(B) *EGR high flow*. The OBD system must detect a malfunction of the EGR system, including a leaking EGR valve (i.e., exhaust gas flowing through the valve when the valve is commanded closed) prior to an increase from the manufacturer's specified EGR flow rate that would cause an engine's emissions to exceed the emissions thresholds for ''other monitors'' as shown in Table 1 of this paragraph (g). For engines in which no failure or deterioration of the EGR system that causes an increase in flow could result in an engine's emissions exceeding the applicable emissions thresholds, the OBD system must detect a malfunction when the system has reached its control limits such that it cannot reduce EGR flow to achieve the commanded flow rate.

(C) *EGR slow response*. The OBD system must detect a malfunction of the EGR system prior to any failure or deterioration in the capability of the EGR system to achieve the commanded flow rate within a manufacturer-specified time that would cause an engine's emissions to exceed the emissions thresholds for ''other monitors'' as shown in Table 1 of this paragraph (g). The OBD system must monitor both the capability of the EGR system to respond to a commanded increase in flow and the capability of the EGR system to respond to a commanded decrease in flow.

(D) *EGR system feedback control*. See paragraph (i)(6) of this section.

(E) *EGR cooler performance*. The OBD system must detect a malfunction of the EGR cooler prior to a reduction from the manufacturer's specified cooling performance that would cause an engine's emissions to exceed the emissions thresholds for ''other monitors'' as shown in Table 1 of this paragraph (g). For engines in which no failure or deterioration of the EGR cooler could result in an engine's emissions exceeding the applicable emissions thresholds, the OBD system must detect a malfunction when the system has no detectable amount of EGR cooling.

(iii) *EGR system monitoring conditions*. (A) The OBD system must monitor continuously for malfunctions identified in paragraphs (g)(3)(ii)(A), (g)(3)(ii)(B), and (g)(3)(ii)(D) of this section.

(B) The manufacturer must define the monitoring conditions for malfunctions identified in paragraph (g)(3)(ii)(C) of this section in accordance with paragraphs (c) and (d) of this section, with the exception that monitoring must occur every time the monitoring conditions are met during the drive cycle rather than once per drive cycle as required in paragraph (c)(2) of this section. For purposes of tracking and reporting as required in paragraph (d)(1) of this section, all monitors used to detect malfunctions identified in paragraph (g)(3)(ii)(C) of this section must be tracked separately but reported as a single set of values as specified in paragraph (e)(1)(iii) of this section.

(C) The manufacturer must define the monitoring conditions for malfunctions identified in paragraph (g)(3)(ii)(E) of this section in accordance with paragraphs (c) and (d) of this section. For purposes of tracking and reporting as required in paragraph (d)(1) of this section, all monitors used to detect malfunctions identified in paragraph (g)(3)(ii)(E) of this section must be tracked separately but reported as a single set of values as specified in paragraph (e)(1)(iii) of this section.

(D) The manufacturer may request Administrator approval to disable temporarily the EGR system monitor(s) under specific ambient conditions (e.g., when freezing may affect performance of the system) or during specific operating conditions (e.g., transients, extreme low or high flow conditions). The manufacturer must be able to demonstrate via data or engineering analysis that a reliable system monitor cannot be run when these conditions exist because it cannot robustly distinguish between a malfunctioning system and a properly operating system. The manufacturer is still required to maintain comprehensive component monitoring as required in paragraph (i)(3) of this section.

(iv) *EGR system MIL activation and DTC storage*. The MIL must activate and DTCs must be stored according to the provisions of paragraph (b) of this section.

(4) *Turbo boost control system monitoring*—(i) *General*. The OBD system

must monitor the boost pressure control system (e.g., turbocharger) on engines so equipped for under and over boost malfunctions. For engines equipped with variable geometry turbochargers (VGT), the OBD system must monitor the VGT system for slow response malfunctions. For engines equipped with charge air cooler systems, the OBD system must monitor the charge air cooler system for cooling system performance malfunctions. The individual electronic components (e.g., actuators, valves, sensors) that are used in the boost pressure control system must be monitored in accordance with the comprehensive component requirements in paragraph (i)(3) of this section.

(ii) *Turbo boost control system malfunction criteria*—(A) *Turbo underboost*. The OBD system must detect a malfunction of the boost pressure control system prior to a decrease from the manufacturer's commanded boost pressure, or expected boost pressure on engines not equipped with a boost pressure control system, that would cause an engine's emissions to exceed the emissions thresholds for ''other monitors'' as shown in Table 1 of this paragraph (g). For engines in which no failure or deterioration of the boost pressure control system that causes a decrease in boost could result in an engine's emissions exceeding the applicable emissions thresholds, the OBD system must detect a malfunction when the system has reached its control limits such that it cannot increase boost to achieve the commanded boost pressure.

(B) *Turbo overboost*. The OBD system must detect a malfunction of the boost pressure control system on engines so equipped prior to an increase from the manufacturer's commanded boost pressure that would cause an engine's emissions to exceed the emissions thresholds for ''other monitors'' as shown in Table 1 of this paragraph (g). For engines in which no failure or deterioration of the boost pressure control system that causes an increase in boost could result in an engine's emissions exceeding the applicable emissions thresholds, the OBD system must detect a malfunction when the system has reached its control limits such that it cannot decrease boost to achieve the commanded boost pressure.

(C) *VGT slow response*. The OBD system must detect a malfunction prior to any failure or deterioration in the capability of the VGT system on engines so equipped to achieve the commanded turbocharger geometry within a manufacturer-specified time that would cause an engine's emissions to exceed the emissions thresholds for ''other monitors'' as shown in Table 1 of this paragraph (g). For engines in which no failure or deterioration of the VGT system response could result in an engine's emissions exceeding the applicable emissions thresholds, the OBD system must detect a malfunction of the VGT system when proper functional response of the system to computer commands does not occur.

(D) *Turbo boost feedback control*. See paragraph (i)(6)of this section.

(E) *Charge air undercooling*. The OBD system must detect a malfunction of the charge air cooling system prior to a decrease from the manufacturer's specified cooling rate that would cause an engine's emissions to exceed the emissions thresholds for ''other monitors'' as shown in Table 1 of this paragraph (g). For engines in which no failure or deterioration of the charge air cooling system that causes a decrease in cooling performance could result in an engine's emissions exceeding the applicable emissions thresholds, the OBD system must detect a malfunction when the system has no detectable amount of charge air cooling.

(iii) *Turbo boost monitoring conditions*. (A) The OBD system must monitor continuously for malfunctions identified in paragraphs (g)(4)(ii)(A), (g)(4)(ii)(B), and (g)(4)(ii)(D) of this section.

(B) The manufacturer must define the monitoring conditions for malfunctions identified in paragraph (g)(4)(ii)(C) of this section in accordance with paragraphs (c) and (d) of this section, with the exception that monitoring must occur every time the monitoring conditions are met during the drive cycle rather than once per drive cycle as required in paragraph (c)(2) of this section. For purposes of tracking and reporting as required in paragraph (d)(1) of this section, all monitors used to detect malfunctions identified in

paragraph (g)(4)(ii)(C) of this section must be tracked separately but reported as a single set of values as specified in paragraph (e)(1)(iii) of this section.

(C) The manufacturer must define the monitoring conditions for malfunctions identified in paragraph (g)(4)(ii)(E) of this section in accordance with paragraphs (c) and (d) of this section. For purposes of tracking and reporting as required in paragraph (d)(1) of this section, all monitors used to detect malfunctions identified in paragraph (g)(4)(ii)(E) of this section must be tracked separately but reported as a single set of values as specified in paragraph (e)(1)(iii) of this section.

(D) The manufacturer may request Administrator approval to disable temporarily the turbo boost system monitor(s) during specific operating conditions (e.g., transients, extreme low or high flow conditions). The manufacturer must be able to demonstrate via data or engineering analysis that a reliable system monitor cannot be run when these conditions exist because it cannot robustly distinguish between a malfunctioning system and a properly operating system. The manufacturer is still required to maintain comprehensive component monitoring as required in paragraph (i)(3) of this section.

(iv) *Turbo boost system MIL activation and DTC storage.* The MIL must activate and DTCs must be stored according to the provisions of paragraph (b) of this section.

(5) *NMHC converting catalyst monitoring*—(i) *General.* The OBD system must monitor the NMHC converting catalyst(s) for proper NMHC conversion capability. For purposes of this paragraph (g)(5), each catalyst that converts NMHC must be monitored either individually or in combination with others. For purposes of this paragraph (g)(5), NMHC conversion that may occur over the DPF or other aftertreatment devices is not included.

(ii) *NMHC converting catalyst malfunction criteria*—(A) *NMHC converting catalyst conversion efficiency.* The OBD system must detect a malfunction when the catalyst has no detectable amount of NMHC conversion capability.

(B) *NMHC converting catalyst aftertreatment assistance functions.* For catalysts used to generate an exotherm to assist DPF regeneration, the OBD system must detect a malfunction when the catalyst is unable to generate a sufficient exotherm to achieve DPF regeneration. In meeting this requirement, the OBD system must detect a malfunction when the DOC is unable to generate a temperature rise of 100 degrees C, or to reach the necessary DPF regeneration temperature, within 60 seconds of initiating an active DPF regeneration. Further, the OBD system must detect a malfunction when the DOC is unable to sustain the necessary regeneration temperature for the duration of the regeneration event. The OBD or control system must abort the regeneration if the regeneration temperature has not been reached within five minutes of initiating an active regeneration event, or if the regeneration temperature cannot be sustained for the duration of the regeneration event. As an alternative to these specific malfunction criteria, the manufacturer may employ different criteria. To do so, the manufacturer must submit a description with supporting data, subject to Administrator approval, of their DPF regeneration monitoring strategy. The Administrator will consider the strategy's equivalence to the specific criteria stated in this paragraph when considering the request. Also as an alternative to these specific malfunction criteria, the manufacturer may employ an OBD monitor that detects a catalyst malfunction when the catalyst conversion capability decreases to the point that NMHC emissions exceed 2.5 times the applicable NMHC emission standard but must adjust emission test results pursuant to paragraph (f)(2) of this section. For catalysts located downstream of a DPF and used to convert NMHC emissions during DPF regeneration, the OBD system must detect a malfunction when the catalyst has no detectable amount of NMHC conversion capability unless the manufacturer can demonstrate that deterioration or malfunction of the catalyst will not result in emissions that exceed the applicable NMHC standard.

(iii) *NMHC converting catalyst monitoring conditions.* The manufacturer

must define the monitoring conditions for malfunctions identified in paragraphs (g)(5)(ii)(A) and (g)(5)(ii)(B) of this section in accordance with paragraphs (c) and (d) of this section. For purposes of tracking and reporting as required in paragraph (d)(1) of this section, all monitors used to detect malfunctions identified in paragraphs (g)(5)(ii)(A) and (g)(5)(ii)(B) of this section must be tracked separately but reported as a single set of values as specified in paragraph (e)(1)(iii) of this section.

(iv) *NMHC converting catalyst MIL activation and DTC storage*. The MIL must activate and DTCs must be stored according to the provisions of paragraph (b) of this section. The monitoring method for the NMHC converting catalyst(s) must be capable of detecting all instances, except diagnostic self-clearing, when a catalyst DTC has been erased but the catalyst has not been replaced (e.g., catalyst over-temperature histogram approaches are not acceptable).

(6) *Selective catalytic reduction (SCR) and lean NO_X catalyst monitoring*—(i) *General*. The OBD system must monitor the SCR and/or the lean NO_X converting catalyst(s) for proper conversion capability. For engines equipped with SCR systems or other catalyst systems that use an active/intrusive reductant injection (e.g., active lean NO_X catalysts that use diesel fuel post-injection or in-exhaust injection), the OBD system must monitor the active/intrusive reductant injection system for proper performance. The individual electronic components (e.g., actuators, valves, sensors, heaters, pumps) in the active/intrusive reductant injection system must be monitored in accordance with the comprehensive component requirements in paragraph (i)(3) of this section. For purposes of this paragraph (g)(6), each catalyst that converts NO_X must be monitored either individually or in combination with others.

(ii) *SCR and lean NO_X catalyst malfunction criteria*—(A) *SCR and lean NO_X catalyst conversion efficiency*. The OBD system must detect a catalyst malfunction when the catalyst conversion capability decreases to the point that would cause an engine's emissions to exceed the emissions thresholds for NO_X aftertreatment systems as shown in Table 1 of this paragraph (g). If no failure or deterioration of the catalyst NO_X conversion capability could result in an engine's emissions exceeding any of the applicable emissions thresholds, the OBD system must detect a malfunction when the catalyst has no detectable amount of NO_X conversion capability.

(B) *SCR and lean NO_X catalyst active/intrusive reductant delivery performance*. The OBD system must detect a malfunction prior to any failure or deterioration of the system to properly regulate reductant delivery (e.g., urea injection, separate injector fuel injection, post injection of fuel, air assisted injection/mixing) that would cause an engine's emissions to exceed any of the applicable emissions thresholds for NO_X aftertreatment systems as shown in Table 1 of this paragraph (g). If no failure or deterioration of the reductant delivery system could result in an engine's emissions exceeding any of the applicable thresholds, the OBD system must detect a malfunction when the system has reached its control limits such that it is no longer able to deliver the desired quantity of reductant.

(C) *SCR and lean NO_X catalyst active/intrusive reductant quantity*. If the SCR or lean NO_X catalyst system uses a reductant other than the fuel used for the engine, or uses a reservoir/tank for the reductant that is separate from the fuel tank used for the engine, the OBD system must detect a malfunction when there is no longer sufficient reductant available (e.g., the reductant tank is empty).

(D) *SCR and lean NO_X catalyst active/intrusive reductant quality*. If the SCR or lean NO_X catalyst system uses a reservoir/tank for the reductant that is separate from the fuel tank used for the engine, the OBD system must detect a malfunction when an improper reductant is used in the reductant reservoir/tank (e.g., the reductant tank is filled with something other than the reductant).

(E) *SCR and lean NO_X catalyst active/intrusive reductant feedback control*. See paragraph (i)(6) of this section.

(iii) *SCR and lean NO_X catalyst monitoring conditions.* (A) The manufacturers must define the monitoring conditions for malfunctions identified in paragraphs (g)(6)(ii)(A) and (g)(6)(ii)(D) of this section in accordance with paragraphs (c) and (d) of this section. For purposes of tracking and reporting as required in paragraph (d)(1) of this section, all monitors used to detect malfunctions identified in paragraph (g)(6)(ii)(A) of this section must be tracked separately but reported as a single set of values as specified in paragraph (e)(1)(iii) of this section.

(B) The OBD system must monitor continuously for malfunctions identified in paragraphs (g)(6)(ii)(B), (g)(6)(ii)(C), and (g)(6)(ii)(E) of this section.

(iv) *SCR and lean NO_X catalyst MIL activation and DTC storage.* (A) For malfunctions identified in paragraph (g)(6)(ii)(A) of this section, the MIL must activate and DTCs must be stored according to the provisions of paragraph (b) of this section.

(B) For malfunctions identified in paragraphs (g)(6)(ii)(B), (g)(6)(ii)(C), and (g)(6)(ii)(D) of this section, the manufacturer may delay activating the MIL if the vehicle is equipped with an alternative indicator for notifying the vehicle operator of the malfunction. The alternative indicator must be of sufficient illumination and be located such that it is readily visible to the vehicle operator under all lighting conditions. If the vehicle is not equipped with such an alternative indicator and the OBD MIL activates, the MIL may be immediately deactivated and the corresponding DTC(s) erased once the OBD system has verified that the reductant tank has been refilled properly and the MIL has not been activated for any other malfunction. The Administrator may approve other strategies that provide equivalent assurance that a vehicle operator would be promptly notified and that corrective action would be taken.

(C) The monitoring method for the SCR and lean NO_X catalyst(s) must be capable of detecting all instances, except diagnostic self-clearing, when a catalyst DTC(s) has been erased but the catalyst has not been replaced (e.g., catalyst over-temperature histogram approaches are not acceptable).

(7) *NO_X adsorber system monitoring*—(i) *General.* The OBD system must monitor the NO_X adsorber on engines so-equipped for proper performance. For engines equipped with active/intrusive injection (e.g., in-exhaust fuel and/or air injection) to achieve desorption of the NO_X adsorber, the OBD system must monitor the active/intrusive injection system for proper performance. The individual electronic components (e.g., injectors, valves, sensors) that are used in the active/intrusive injection system must be monitored in accordance with the comprehensive component requirements in paragraph (i)(3) of this section.

(ii) *NO_X adsorber system malfunction criteria*—(A) *NO_X adsorber system capability.* The OBD system must detect a NO_X adsorber malfunction when its capability (i.e., its combined adsorption and conversion capability) decreases to the point that would cause an engine's NO_X emissions to exceed the emissions thresholds for NO_X aftertreatment systems as shown in Table 1 of this paragraph (g). If no failure or deterioration of the NO_X adsorber capability could result in an engine's NO_X emissions exceeding the applicable emissions thresholds, the OBD system must detect a malfunction when the system has no detectable amount of NO_X adsorber capability.

(B) *NO_X adsorber system active/intrusive reductant delivery performance.* For NO_X adsorber systems that use active/intrusive injection (e.g., in-cylinder post fuel injection, in-exhaust air-assisted fuel injection) to achieve desorption of the NO_X adsorber, the OBD system must detect a malfunction if any failure or deterioration of the injection system's ability to properly regulate injection causes the system to be unable to achieve desorption of the NO_X adsorber.

(C) *NO_X adsorber system feedback control.* Malfunction criteria for the NO_X adsorber and the NO_X adsorber active/instrusive reductant delivery system are contained in paragraph (i)(6) of this section.

(iii) *NO_X adsorber system monitoring conditions.* (A) The manufacturer must define the monitoring conditions for

malfunctions identified in paragraph (g)(7)(ii)(A) of this section in accordance with paragraphs (c) and (d) of this section. For purposes of tracking and reporting as required in paragraph (d)(1) of this section, all monitors used to detect malfunctions identified in paragraph (g)(7)(ii)(A) of this section must be tracked separately but reported as a single set of values as specified in paragraph (e)(1)(iii) of this section.

(B) The OBD system must monitor continuously for malfunctions identified in paragraphs (g)(7)(ii)(B) and (g)(7)(ii)(C) of this section.

(iv) *NO_X adsorber system MIL activation and DTC storage.* The MIL must activate and DTCs must be stored according to the provisions of paragraph (b) of this section.

(8) *Diesel particulate filter (DPF) system monitoring*—(i) *General.* The OBD system must monitor the DPF on engines so-equipped for proper performance. For engines equipped with active regeneration systems that use an active/intrusive injection (e.g., in-exhaust fuel injection, in-exhaust fuel/air burner), the OBD system must monitor the active/intrusive injection system for proper performance. The individual electronic components (e.g., injectors, valves, sensors) that are used in the active/intrusive injection system must be monitored in accordance with the comprehensive component requirements in paragraph (i)(3) of this section.

(ii) *DPF system malfunction criteria*—(A) *DPF filtering performance.* The OBD system must detect a malfunction prior to a decrease in the PM filtering capability of the DPF (e.g., cracking, melting, etc.) that would cause an engine's PM emissions to exceed the emissions thresholds for DPF systems as shown in Table 1 of this paragraph (g). If no failure or deterioration of the PM filtering performance could result in an engine's PM emissions exceeding the applicable emissions thresholds, the OBD system must detect a malfunction when no detectable amount of PM filtering occurs. As an alternative to a threshold monitor, the OBD system, on model year 2010 through 2012 engines only, can be designed to detect a malfunction based on a detectable decrease in the expected pressure drop across the DPF for a period of 5 seconds or more. The monitoring area for this alternative is determined using engine speed and load points defined in test cycles and procedures for the supplemental emissions test (SET) under § 86.1360–2007. The monitoring area shall include all engine speed and load points greater than a region bounded by a line connecting mode numbers 2, 6, 3, and 13 (i.e. A100, A75, B50, and C50). At engine speeds greater than ''speed C'', the monitor shall run whenever engine load is greater than 50%. For purposes of this paragraph, the detectable change in pressure drop is determined by operating the engine at the B50 engine speed and load point (as described in the SET test procedures), observing the pressure drop on a clean, nominal DPF, and multiplying the observed pressure drop by 0.5 or other factor supported by data and approved by the Administrator. The detectable change in pressure drop shall be reported in units of kilopascals (kPa). At time of certification, manufacturers shall provide the detectable change in pressure drop value along with OBD data stream parameters recorded with a clean DPF under the following nine engine speed/load operating points of the SET: A50, A75, A100, B50, B75, B100, C50, C75, and C100. The OBD data stream pararmeters to be reported are described in (k)(4)(ii) of this section and shall include the following: Engine speed; calculated load; air flow rate from mass air flow sensor (if so equipped); fuel rate; and DPF delta pressure.

(B) *DPF regeneration frequency.* The OBD system must detect a malfunction when the DPF regeneration frequency increases from (i.e., occurs more often than) the manufacturer's specified regeneration frequency to a level such that it would cause an engine's NMHC emissions to exceed the emissions threshold for DPF systems as shown in Table 1 of this paragraph (g). If no such regeneration frequency exists that could cause NMHC emissions to exceed the applicable emission threshold, the OBD system must detect a malfunction when the DPF regeneration frequency exceeds the manufacturer's specified design limits for allowable regeneration frequency.

(C) *DPF incomplete regeneration*. The OBD system must detect a regeneration malfunction when the DPF does not properly regenerate under manufacturer-defined conditions where regeneration is designed to occur.

(D) *DPF missing substrate*. The OBD system must detect a malfunction if either the DPF substrate is completely destroyed, removed, or missing, or if the DPF assembly has been replaced with a muffler or straight pipe.

(E) *DPF system active/intrusive injection*. For DPF systems that use active/intrusive injection (e.g., in-cylinder post fuel injection, in-exhaust air-assisted fuel injection) to achieve regeneration of the DPF, the OBD system must detect a malfunction if any failure or deterioration of the injection system's ability to properly regulate injection causes the system to be unable to achieve regeneration of the DPF.

(F) *DPF regeneration feedback control*. See paragraph (i)(6) of this section.

(iii) *DPF monitoring conditions*. The manufacturer must define the monitoring conditions for malfunctions identified in paragraph (g)(8)(ii) of this section in accordance with paragraphs (c) and (d) of this section, with the exception that monitoring must occur every time the monitoring conditions are met during the drive cycle rather than once per drive cycle as required in paragraph (c)(2) of this section. For OBD systems designed to the alternative malfunction criteria of paragraph (g)(8)(ii)(A) of this section, the alternative DPF monitor shall run continuously whenever engine speed and load conditions are within the monitoring area described in paragraph (g)(8)(ii)(A). The OBD system may make a malfunction or potential malfunction determination during any successful monitoring event but shall include in the enable criteria of any subsequent monitoring events a confirmed successful and complete DPF regeneration. The subsequent monitoring events must be conducted within an operating period that ensures that the detected malfunction has not ''healed'' due to trapped particulates in the compromised portion of the DPF substrate. For purposes of tracking and reporting as required in paragraph (d)(1) of this section, all monitors used to detect malfunctions identified in paragraph (g)(8)(ii) of this section must be tracked separately but reported as a single set of values as specified in paragraph (e)(1)(iii) of this section.

(iv) *DPF system MIL activation and DTC storage*. The MIL must activate and DTCs must be stored according to the provisions of paragraph (b) of this section.

(9) *Exhaust gas sensor and sensor heater monitoring*—(i) *General*. The OBD system must monitor for proper output signal, activity, response rate, and any other parameter that can affect emissions, all exhaust gas sensors (e.g., oxygen, air-fuel ratio, NO_X) used for emission control system feedback (e.g., EGR control/feedback, SCR control/feedback, NO_X adsorber control/feedback) and/or as a monitoring device. For engines equipped with heated exhaust gas sensors, the OBD system must monitor the heater for proper performance.

(ii) *Malfunction criteria for air-fuel ratio sensors located upstream of aftertreatment devices*—(A)*Sensor performance*. The OBD system must detect a malfunction prior to any failure or deterioration of the sensor voltage, resistance, impedance, current, response rate, amplitude, offset, or other characteristic(s) that would cause an engine's emissions to exceed the emissions thresholds for ''other monitors'' as shown in Table 1 of this paragraph (g).

(B) *Circuit integrity*. The OBD system must detect malfunctions of the sensor related to a lack of circuit continuity or signal out-of-range values.

(C) *Feedback function*. The OBD system must detect a malfunction of the sensor if the emission control system (e.g., EGR, SCR, or NO_X adsorber) is unable to use that sensor as a feedback input (e.g., causes limp-home or open-loop operation).

(D) *Monitoring function*. To the extent feasible, the OBD system must detect a malfunction of the sensor when the sensor output voltage, resistance, impedance, current, amplitude, activity, offset, or other characteristics are no

longer sufficient for use as an OBD system monitoring device (e.g., for catalyst, EGR, SCR, or NO_X adsorber monitoring).

(iii) *Malfunction criteria for air-fuel ratio sensors located downstream of aftertreatment devices*—(A) *Sensor performance*. The OBD system must detect a malfunction prior to any failure or deterioration of the sensor voltage, resistance, impedance, current, response rate, amplitude, offset, or other characteristic(s) that would cause an engine's emissions to exceed the emissions thresholds for air-fuel ratio sensors downstream of aftertreatment devices as shown in Table 1 of this paragraph (g).

(B) *Circuit integrity*. The OBD system must detect malfunctions of the sensor related to a lack of circuit continuity or signal out-of-range values.

(C) *Feedback function*. The OBD system must detect a malfunction of the sensor if the emission control system (e.g., EGR, SCR, or NO_X absorber) is unable to use that sensor as a feedback input (e.g., causes limp-home or open-loop operation).

(D) *Monitoring function*. To the extent feasible, the OBD system must detect a malfunction of the sensor when the sensor output voltage, resistance, impedance, current, amplitude, activity, offset, or other characteristics are no longer sufficient for use as an OBD system monitoring device (e.g., for catalyst, EGR, SCR, or NO_X absorber monitoring).

(iv) *Malfunction criteria for* NO_X *sensors*—(A) *Sensor performance*. The OBD system must detect a malfunction prior to any failure or deterioration of the sensor voltage, resistance, impedance, current, response rate, amplitude, offset, or other characteristic(s) that would cause an engine's emissions to exceed the emissions thresholds for NO_X sensors as shown in Table 1 of this paragraph (g).

(B) *Circuit integrity*. The OBD system must detect malfunctions of the sensor related to a lack of circuit continuity or signal out-of-range values.

(C) *Feedback function*. The OBD system must detect a malfunction of the sensor if the emission control system (e.g., EGR, SCR, or NO_X adsorber) is unable to use that sensor as a feedback input (e.g., causes limp-home or open-loop operation).

(D) *Monitoring function*. To the extent feasible, the OBD system must detect a malfunction of the sensor when the sensor output voltage, resistance, impedance, current, amplitude, activity, offset, or other characteristics are no longer sufficient for use as an OBD system monitoring device (e.g., for catalyst, EGR, SCR, or NO_X adsorber monitoring).

(v) *Malfunction criteria for other exhaust gas sensors*. For other exhaust gas sensors, the manufacturer must submit a monitoring plan to the Administrator for approval. The plan must include data and/or engineering evaluations that demonstrate that the monitoring plan is as reliable and effective as the monitoring required in paragraphs (g)(9)(ii), (g)(9)(iii), (g)(9)(iv) of this section.

(vi) *Malfunction criteria for exhaust gas sensor heaters*. (A) The OBD system must detect a malfunction of the heater performance when the current or voltage drop in the heater circuit is no longer within the manufacturer's specified limits for normal operation (i.e., within the criteria required to be met by the component vendor for heater circuit performance at high mileage). The manufacturer may use other malfunction criteria for heater performance malfunctions. To do so, the manufacturer must be able to demonstrate via data and/or an engineering evaluation that the monitor is reliable and robust.

(B) The OBD system must detect malfunctions of the heater circuit including open or short circuits that conflict with the commanded state of the heater (e.g., shorted to 12 Volts when commanded to 0 Volts (ground)).

(vii) *Monitoring conditions for exhaust gas sensors*. (A) The manufacturer must define the monitoring conditions for malfunctions identified in paragraphs (g)(9)(ii)(A), (g)(9)(iii)(A), and (g)(9)(iv)(A) of this section (i.e., sensor performance) in accordance with paragraphs (c) and (d) of this section. For purposes of tracking and reporting as required in paragraph (d)(1) of this section, all monitors used to detect malfunctions identified in paragraphs (g)(9)(ii)(A), (g)(9)(iii)(A), and

(g)(9)(iv)(A) of this section must be tracked separately but reported as a single set of values as specified in paragraph (e)(1)(iii) of this section.

(B) The manufacturer must define the monitoring conditions for malfunctions identified in paragraphs (g)(9)(ii)(D), (g)(9)(iii)(D), and (g)(9)(iv)(D) of this section (i.e., monitoring function) in accordance with paragraphs (c) and (d) of this section with the exception that monitoring must occur every time the monitoring conditions are met during the drive cycle rather than once per drive cycle as required in paragraph (c)(2) of this section.

(C) Except as provided for in paragraph (g)(9)(vii)(D) of this section, the OBD system must monitor continuously for malfunctions identified in paragraphs (g)(9)(ii)(B), (g)(9)(ii)(C), (g)(9)(iii)(B), (g)(9)(iii)(C), (g)(9)(iv)(B), (g)(9)(iv)(C) of this section (i.e., circuit integrity and feedback function).

(D) A manufacturer may request approval to disable continuous exhaust gas sensor monitoring when an exhaust gas sensor malfunction cannot be distinguished from other effects (e.g., disable monitoring for out-of-range on the low side during fuel cut conditions). To do so, the manufacturer must demonstrate via data and/or engineering analyses that a properly functioning sensor cannot be distinguished from a malfunctioning sensor and that the disablement interval is limited only to that necessary for avoiding falsemalfunction detection.

(viii) *Monitoring conditions for exhaust gas sensor heaters*—(A) The manufacturer must define monitoring conditions for malfunctions identified in paragraph (g)(9)(vi)(A) of this section (i.e., sensor heater performance) in accordance with paragraphs (c) and (d) of this section.

(B) The OBD system must monitor continuously for malfunctions identified in paragraph (g)(9)(vi)(B) of this section (i.e., circuit malfunctions).

(ix) *Exhaust gas sensor and sensor heater MIL activation and DTC storage.* The MIL must activate and DTCs must be stored according to the provisions of paragraph (b) of this section.

(10) *Variable Valve Timing (VVT) system monitoring*—(i) *General.* The OBD system must monitor the VVT system on engines so equipped for target error and slow response malfunctions. The individual electronic components (e.g., actuators, valves, sensors) that are used in the VVT system must be monitored in accordance with the comprehensive components requirements in paragraph (i)(3) of this section.

(ii) *VVT system malfunction criteria*—(A) *VVT system target error.* The OBD system must detect a malfunction prior to any failure or deterioration in the capability of the VVT system to achieve the commanded valve timing and/or control within a crank angle and/or lift tolerance that would cause an engine's emissions to exceed the emission thresholds for ''other monitors'' as shown in Table 1 of this paragraph (g).

(B) *VVT slow response.* The OBD system must detect a malfunction prior to any failure or deterioration in the capability of the VVT system to achieve the commanded valve timing and/or control within a manufacturer-specified time that would cause an engine's emissions to exceed the emission thresholds for ''other monitors'' as shown in Table 1 of this paragraph (g).

(C) For engines in which no failure or deterioration of the VVT system could result in an engine's emissions exceeding the applicable emissions thresholds of paragraphs (g)(10)(ii)(A) and (g)(10)(ii)(B) of this section, the OBD system must detect a malfunction of the VVT system when proper functional response of the system to computer commands does not occur.

(iii) *VVT system monitoring conditions.* Manufacturers must define the monitoring conditions for VVT system malfunctions identified in paragraph (g)(10)(ii) of this section in accordance with paragraphs (c) and (d) of this section, with the exception that monitoring must occur every time the monitoring conditions are met during the drive cycle rather than once per drive cycle as required in paragraph (c)(2) of this section. For purposes of tracking and reporting as required in paragraph (d)(1) of this section, all monitors used to detect malfunctions identified in paragraph (g)(10)(ii) of this section

must be tracked separately but reported as a single set of values as specified in paragraph (e)(1)(iii) of this section.

(iv) *VVT MIL activation and DTC storage*. The MIL must activate and DTCs must be stored according to the provisions of paragraph (b) of this section.

(h) *OBD monitoring requirements for gasoline-fueled/spark-ignition engines*. The following table shows the thresholds at which point certain components or systems, as specified in this paragraph (h), are considered malfunctioning.

TABLE 2—OBD EMISSIONS THRESHOLDS FOR GASOLINE-FUELED/SPARK-IGNITION ENGINES MEANT FOR PLACEMENT IN APPLICATIONS GREATER THAN 14,000 POUNDS GVWR (G/BHP-HR)

Component	NO_X	NMHC	CO	§ 86.010–18 reference
Catalyst system	1.75x std	1.75x std		(h)(6)
Evaporative emissions control system.		0.150 inch leak		(h)(7)
"Other monitors" with emissions thresholds.	1.5x std	1.5x std	1.5x std	(h)(1), (h)(2), (h)(3), (h)(4), (h)(5), (h)(8), (h)(9)

Notes: 1.75x std means a multiple of 1.75 times the applicable emissions standard; these emissions thresholds apply to the monitoring requirements of paragraph (h) of this section; The evaporative emissions control system threshold is not, technically, an emissions threshold but rather a leak size that must be detected; nonetheless, for ease we refer to this as the threshold.

(1) *Fuel system monitoring*—(i) *General*. The OBD system must monitor the fuel delivery system to determine its ability to provide compliance with emission standards.

(ii) *Fuel system malfunction criteria*. (A) The OBD system must detect a malfunction of the fuel delivery system (including feedback control based on a secondary oxygen sensor) when the fuel delivery system is unable to maintain an engine's emissions at or below the emissions thresholds for ''other monitors'' as shown in Table 2 of this paragraph (h).

(B) Except as provided for in paragraph (h)(1)(ii)(C) of this section, if the engine is equipped with adaptive feedback control, the OBD system must detect a malfunction when the adaptive feedback control has used up all of the adjustment allowed by the manufacturer.

(C) If the engine is equipped with feedback control that is based on a secondary oxygen (or equivalent) sensor, the OBD system is not required to detect a malfunction of the fuel system solely when the feedback control based on a secondary oxygen sensor has used up all of the adjustment allowed by the manufacturer. However, if a failure or deterioration results in engine emissions that exceed the emissions thresholds for ''other monitors'' as shown in Table 2 of this paragraph (h), the OBD system is required to detect a malfunction.

(D) The OBD system must detect a malfunction whenever the fuel control system fails to enter closed loop operation following engine start within a manufacturer specified time interval. The specified time interval must be supported by data and/or engineering analyses submitted by the manufacturer.

(E) The manufacturer may adjust the malfunction criteria and/or monitoring conditions to compensate for changes in altitude, for temporary introduction of large amounts of purge vapor, or for other similar identifiable operating conditions when such conditions occur.

(iii) *Fuel system monitoring conditions*. The fuel system must be monitored continuously for the presence of a malfunction.

(iv) *Fuel system MIL activation and DTC storage*. (A) A pending DTC must be stored immediately upon the fuel system exceeding the malfunction criteria established in paragraph (h)(1)(ii) of this section.

(B) Except as provided for in paragraph (h)(1)(iv)(C) of this section, if a pending DTC is stored, the OBD system must activate the MIL immediately and store a MIL-on DTC if a malfunction is again detected during either the drive cycle immediately following storage of the pending DTC regardless of

the conditions encountered during that drive cycle, or on the next drive cycle in which similar conditions are encountered to those that occurred when the pending DTC was stored. Similar conditions means engine conditions having an engine speed within 375 rpm, load conditions within 20 percent, and the same warm-up status (i.e., cold or hot) as the engine conditions stored pursuant to paragraph (h)(1)(iv)(E) of this section. Other definitions of similar conditions may be used but must result in comparable timeliness and reliability in detecting similar engine operation.

(C) The pending DTC may be erased at the end of the next drive cycle in which similar conditions have been encountered without having again exceeded the specified fuel system malfunction criteria. The pending DTC may also be erased if similar conditions are not encountered during the 80 drive cycles immediately following detection of the potential malfunction for which the pending DTC was stored.

(D) *Storage of freeze frame conditions.* The OBD system must store and erase freeze frame conditions either in conjunction with storing and erasing a pending DTC or in conjunction with storing and erasing a MIL-on DTC. Freeze frame information associated with a fuel system malfunction shall be stored in preference to freeze frame information required elsewhere in paragraphs (h) or (i) of this section.

(E) Storage of fuel system conditions for determining similar conditions of operation. The OBD must store the engine speed, load, and warm-up status present at the time it first detects a potential malfunction meeting the criteria of paragraph (h)(1)(ii) of this section and stores a pending DTC.

(F) Deactivating the MIL. The MIL may be extinguished after three sequential driving cycles in which similar conditions have been encountered without detecting a malfunction of the fuel system.

(2) *Engine misfire monitoring*—(i) *General.* (A) The OBD system must monitor the engine for misfire causing catalyst damage and misfire causing excess emissions.

(B) The OBD system must identify the specific cylinder that is misfiring. The manufacturer may store a general misfire DTC instead of a cylinder specific DTC under certain operating conditions. To do so, the manufacturer must submit data and/or engineering analyses that demonstrate that the misfiring cylinder cannot be identified reliably when the conditions occur.

(C) If more than one cylinder is misfiring, a separate DTC must be stored to indicate that multiple cylinders are misfiring unless otherwise allowed by this paragraph (h)(2). When identifying multiple cylinder misfire, the OBD system is not required to also identify using separate DTCs each of the misfiring cylinders individually. If more than 90 percent of the detected misfires occur in a single cylinder, an appropriate DTC may be stored that indicates the specific misfiring cylinder rather than storing the multiple cylinder misfire DTC. If two or more cylinders individually have more than 10 percent of the total number of detected misfires, a multiple cylinder DTC must be stored.

(ii) *Engine misfire malfunction criteria*—(A) *Misfire causing catalyst damage.* The manufacturer must determine the percentage of misfire evaluated in 200 revolution increments for each engine speed and load condition that would result in a temperature that causes catalyst damage. If this percentage of misfire is exceeded, it shall be considered a malfunction that must be detected. For every engine speed and load condition for which this percentage of misfire is determined to be lower than five percent, the manufacturer may set the malfunction criteria at five percent. The manufacturer may use a longer interval than 200 revolutions but only for determining, on a given drive cycle, the first misfire exceedance as provided in paragraph (h)(2)(iv)(A) of this section. To do so, the manufacturer must demonstrate that the interval is not so long that catalyst damage would occur prior to the interval being elapsed.

(B) *Misfire causing emissions to exceed the applicable thresholds.* The manufacturer must determine the percentage of misfire evaluated in 1000 revolution increments that would cause emissions

from an emissions durability demonstration engine to exceed the emissions thresholds for ''other monitors'' as shown in Table 2 of this paragraph (h) if that percentage of misfire were present from the beginning of the test. If this percentage of misfire is exceeded, regardless of the pattern of misfire events (e.g., random, equally spaced, continuous), it shall be considered a malfunction that must be detected. To establish this percentage of misfire, the manufacturer must use misfire events occurring at equally spaced, complete engine cycle intervals, across randomly selected cylinders throughout each 1000-revolution increment. If this percentage of misfire is determined to be lower than one percent, the manufacturer may set the malfunction criteria at one percent. The manufacturer may use a longer interval than 1000 revolutions. To do so, the manufacturer must demonstrate that the strategy would be equally effective and timely at detecting misfire.

(iii) *Engine misfire monitoring conditions.* (A) The OBD system must monitor continuously for misfire under the following conditions: from no later than the end of the second crankshaft revolution after engine start; during the rise time and settling time for engine speed to reach the desired idle engine speed at engine start-up (i.e., ''flare-up'' and ''flare-down''); and, under all positive torque engine speeds and load conditions except within the engine operating region bound by the positive torque line (i.e., engine load with the transmission in neutral), and the points represented by an engine speed of 3000 rpm with the engine load at the positive torque line and the redline engine speed with the engine's manifold vacuum at four inches of mercury lower than that at the positive torque line. For this purpose, redline engine speed is defined as either the recommended maximum engine speed as displayed on the instrument panel tachometer, or the engine speed at which fuel shutoff occurs.

(B) If an OBD monitor cannot detect all misfire patterns under all required engine speed and load conditions as required by paragraph (h)(2)(iii)(A) of this section, the OBD system may still be acceptable. The Administrator will evaluate the following factors in making a determination: The magnitude of the region(s) in which misfire detection is limited; the degree to which misfire detection is limited in the region(s) (i.e., the probability of detection of misfire events); the frequency with which said region(s) are expected to be encountered in-use; the type of misfire patterns for which misfire detection is troublesome; and demonstration that the monitoring technology employed is not inherently incapable of detecting misfire under the required conditions (i.e., compliance can be achieved on other engines). The evaluation will be based on the following misfire patterns: equally spaced misfire occurring on randomly selected cylinders; single cylinder continuous misfire; and paired cylinder (cylinders firing at the same crank angle) continuous misfire.

(C) The manufacturer may use monitoring system that has reduced misfire detection capability during the portion of the first 1000 revolutions after engine start that a cold start emission reduction strategy is active that reduces engine torque (e.g., spark retard strategies). To do so, the manufacturer must demonstrate that the probability of detection is greater than or equal to 75 percent during the worst case condition (i.e., lowest generated torque) for a vehicle operated continuously at idle (park/neutral idle) on a cold start between 50 and 86 degrees Fahrenheit and that the technology cannot reliably detect a higher percentage of the misfire events during the conditions.

(D) The manufacturer may disable misfire monitoring or use an alternative malfunction criterion when misfire cannot be distinguished from other effects. To do so, the manufacturer must demonstrate that the disablement interval or the period of use of an alternative malfunction criterion is limited only to that necessary for avoiding false detection and for one or more of the following operating conditions: Rough road; fuel cut; gear changes for manual transmission vehicles; traction control or other vehicle stability control activation such as anti-lock braking or other engine torque modifications to enhance vehicle stability; off-board control or intrusive activation of vehicle components

or monitors during service or assembly plant testing; portions of intrusive evaporative system or EGR monitors that can significantly affect engine stability (i.e., while the purge valve is open during the vacuum pull-down of an evaporative system leak check but not while the purge valve is closed and the evaporative system is sealed or while an EGR monitor causes the EGR valve to be cycled intrusively on and off during positive torque conditions); or, engine speed, load, or torque transients due to throttle movements more rapid than those that occur over the FTP cycle for the worst case engine within each engine family. In general, the Administrator will not approve disablement for conditions involving normal air conditioning compressor cycling from on-to-off or off-to-on, automatic transmission gear shifts (except for shifts occurring during wide open throttle operation), transitions from idle to off-idle, normal engine speed or load changes that occur during the engine speed rise time and settling time (i.e., ''flare-up'' and ''flare-down'') immediately after engine starting without any vehicle operator-induced actions (e.g., throttle stabs), or excess acceleration (except for acceleration rates that exceed the maximum acceleration rate obtainable at wide open throttle while the vehicle is in gear due to abnormal conditions such as slipping of a clutch). The Administrator may approve misfire monitoring disablement or use of an alternate malfunction criterion for any other condition on a case by case basis upon determining that the manufacturer has demonstrated that the request is based on an unusual or unforeseen circumstance and that it is applying the best available computer and monitoring technology.

(E) For engines with more than eight cylinders that cannot meet the requirements of paragraph (h)(2)(iii)(A) of this section, a manufacturer may use alternative misfire monitoring conditions. Such use must be based on data and/or an engineering evaluation submitted by the manufacturer that demonstrate that misfire detection throughout the required operating region cannot be achieved when employing proven monitoring technology (i.e., a technology that provides for compliance with these requirements on other engines) and provided misfire is detected to the fullest extent permitted by the technology. However, the misfire detection system must still monitor during all positive torque operating conditions encountered during an FTP cycle.

(iv) *MIL activation and DTC storage for engine misfire causing catalyst damage*—(A) *Pending DTCs.* A pending DTC must be stored immediately if, during a single drive cycle, the specified misfire percentage described in paragraph (h)(2)(ii)(A) of this section is exceeded three times when operating in the positive torque region encountered during a FTP cycle or is exceeded on a single occasion when operating at any other engine speed and load condition in the positive torque region defined in paragraph (h)(2)(iii)(A) of this section. Immediately after a pending DTC is stored pursuant to this paragraph, the MIL must blink once per second at all times during the drive cycle that engine misfire is occurring. The MIL may be deactivated during those times that misfire is not occurring. If, at the time that a catalyst damaging misfire malfunction occurs, the MIL is already activated for a malfunction other than misfire, the MIL must still blink once per second at all times during the drive cycle that engine misfire is occurring. If misfire ceases, the MIL must stop blinking but remain activated as appropriate in accordance with the other malfunction.

(B) *MIL-on DTCs.* If a pending DTC is stored in accordance with paragraph (h)(2)(iv)(A) of this section, the OBD system must immediately store a MIL-on DTC if the percentage of misfire described in paragraph (h)(2)(ii)(A) of this section is again exceeded one or more times during either the drive cycle immediately following storage of the pending DTC, regardless of the conditions encountered during that drive cycle, or on the next drive cycle in which similar conditions are encountered to those that occurred when the pending DTC was stored. If, during a previous drive cycle, a pending DTC is stored in accordance with paragraph (h)(2)(iv)(A) of this section, a MIL-on DTC must be stored immediately upon

exceeding the percentage misfire described in paragraph (h)(2)(ii)(A) of this section regardless of the conditions encountered. Upon storage of a MIL-on DTC, the MIL must blink once per second at all times during the drive cycle that engine misfire is occurring. If misfire ceases, the MIL must stop blinking but remain activated until the conditions are met for extinguishing the MIL.

(C) *Erasure of pending DTCs.* Pending DTCs stored in accordance with paragraph (h)(2)(iv)(A) of this section must be erased at the end of the next drive cycle in which similar conditions are encountered to those that occurred when the pending DTC was stored provided no exceedances have been detected of the misfire percentage described in paragraph (h)(2)(ii)(A) of this section. The pending DTC may also be erased if similar conditions are not encountered during the next 80 drive cycles immediately following storage of the pending DTC.

(D) *Exemptions for engines with fuel shutoff and default fuel control.* In engines that provide for fuel shutoff and default fuel control to prevent over fueling during catalyst damaging misfire conditions, the MIL need not blink as required by paragraphs (h)(2)(iv)(A) and (h)(2)(iv)(B) of this section. Instead, the MIL may be activated continuously upon misfire detection provided that the fuel shutoff and default fuel control are activated immediately upon misfire detection. Fuel shutoff and default fuel control may be deactivated only when the engine is outside of the misfire range except that the manufacturer may periodically, but not more than once every 30 seconds, deactivate fuel shutoff and default fuel control to determine if the catalyst damaging misfire is still occurring. Normal fueling and fuel control may be resumed if the catalyst damaging misfire is no longer occurring.

(E) The manufacturer may use a strategy that activates the MIL continuously rather than blinking the MIL during extreme catalyst damage misfire conditions (i.e., catalyst damage misfire occurring at all engine speeds and loads). Use of such a strategy must be limited to catalyst damage misfire levels that cannot be avoided during reasonable driving conditions. To use such a strategy, the manufacturer must be able to demonstrate that the strategy will encourage operation of the vehicle in conditions that will minimize catalyst damage (e.g., at low engine speeds and loads).

(v) *MIL activation and DTC storage for engine misfire causing emissions to exceed applicable emissions thresholds.* (A) Immediately upon detection, during the first 1000 revolutions after engine start of the misfire percentage described in paragraph (h)(2)(ii)(B) of this section, a pending DTC must be stored. If such a pending DTC is stored already and another such exceedance of the misfire percentage is detected within the first 1000 revolutions after engine start on any subsequent drive cycle, the MIL must activate and a MIL-on DTC must be stored. The pending DTC may be erased if, at the end of the next drive cycle in which similar conditions are encountered to those that occurred when the pending DTC was stored, there has been no exceedance of the misfire percentage described in paragraph (h)(2)(ii)(B) of this section. The pending DTC may also be erased if similar conditions are not encountered during the next 80 drive cycles immediately following storage of the pending DTC.

(B) No later than the fourth detection during a single drive cycle, following the first 1000 revolutions after engine start of the misfire percentage described in paragraph (h)(2)(ii)(B) of this section, a pending DTC must be stored. If such a pending DTC is stored already, then the MIL must activate and a MIL-on DTC must be stored within 10 seconds of the fourth detection of the misfire percentage described in paragraph (h)(2)(ii)(B) of this section during either the drive cycle immediately following storage of the pending DTC, regardless of the conditions encountered during that drive cycle excepting those conditions within the first 1000 revolutions after engine start, or on the next drive cycle in which similar conditions are encountered to those that occurred when the pending DTC was stored excepting those conditions within the first 1000 revolutions after engine start. The pending DTC may be erased if, at the

end of the next drive cycle in which similar conditions are encountered to those that occurred when the pending DTC was stored, there has been no exceedance of the misfire percentage described in paragraph (h)(2)(ii)(B) of this section. The pending DTC may also be erased if similar conditions are not encountered during the next 80 drive cycles immediately following storage of the pending DTC.

(vi) *Storage of freeze frame conditions for engine misfire.* (A) The OBD system must store and erase freeze frame conditions (as defined in paragraph (k)(4)(iii) of this section) either in conjunction with storing and erasing a pending DTC or in conjunction with storing and erasing a MIL-on DTC.

(B) If, upon storage of a DTC as required by paragraphs (h)(2)(iv) and (h)(2)(v) of this section, there already exist stored freeze frame conditions for a malfunction other than a misfire or fuel system malfunction (see paragraph (h)(1) of this section) then the stored freeze frame information shall be replaced with freeze frame information associated with the misfire malfunction.

(vii) *Storage of engine conditions in association with engine misfire.* Upon detection of the misfire percentages described in paragraphs (h)(2)(ii)(A) and (h)(2)(ii)(B) of this section, the following engine conditions must be stored for use in determining similar conditions: Engine speed, load, and warm up status of the first misfire event that resulted in pending DTC storage.

(viii) *MIL deactivation in association with engine misfire.* The MIL may be deactivated after three sequential drive cycles in which similar conditions have been encountered without an exceedance of the misfire percentages described in paragraphs (h)(2)(ii)(A) and (h)(2)(ii)(B) of this section.

(3) *Exhaust gas recirculation system monitoring*—(i) *General.* The OBD system must monitor the EGR system on engines so equipped for low and high flow rate malfunctions. The individual electronic components (e.g., actuators, valves, sensors) that are used in the EGR system must be monitored in accordance with the comprehensive component requirements in paragraph (i)(3) of this section.

(ii) *EGR system malfunction criteria.* (A) The OBD system must detect a malfunction of the EGR system prior to a decrease from the manufacturer's specified EGR flow rate that would cause an engine's emissions to exceed the emissions thresholds for ''other monitors'' as shown in Table 2 of this paragraph (h). For engines in which no failure or deterioration of the EGR system that causes a decrease in flow could result in an engine's emissions exceeding the applicable emissions thresholds, the OBD system must detect a malfunction when the system has no detectable amount of EGR flow.

(B) The OBD system must detect a malfunction of the EGR system prior to an increase from the manufacturer's specified EGR flow rate that would cause an engine's emissions to exceed the emissions thresholds for ''other monitors'' as shown in Table 2 of this paragraph (h). For engines in which no failure or deterioration of the EGR system that causes an increase in flow could result in an engine's emissions exceeding the applicable emissions thresholds, the OBD system must detect a malfunction when the system has reached its control limits such that it cannot reduce EGR flow.

(iii) *EGR system monitoring conditions.* (A) The manufacturer must define the monitoring conditions for malfunctions identified in paragraph (h)(3)(ii) of this section in accordance with paragraphs (c) and (d) of this section. For purposes of tracking and reporting as required by paragraph (d)(1) of this section, all monitors used to detect malfunctions identified in paragraph (h)(3)(ii) of this section must be tracked separately but reported as a single set of values as specified in paragraph (e)(1)(iii) of this section.

(B) The manufacturer may disable temporarily the EGR monitor under conditions when monitoring may not be reliable (e.g., when freezing may affect performance of the system). To do so, the manufacturer must be able to demonstrate that the monitor is unreliable when such conditions exist.

(iv) *EGR system MIL activation and DTC storage.* The MIL must activate and DTCs must be stored according to

the provisions of paragraph (b) of this section.

(4) *Cold start emission reduction strategy monitoring*—(i) *General*. If an engine incorporates a specific engine control strategy to reduce cold start emissions, the OBD system must monitor the key components (e.g., idle air control valve), other than secondary air, while the control strategy is active to ensure proper operation of the control strategy.

(ii) *Cold start strategy malfunction criteria*. (A) The OBD system must detect a malfunction prior to any failure or deterioration of the individual components associated with the cold start emission reduction control strategy that would cause an engine's emissions to exceed the emissions thresholds for ''other monitors'' as shown in Table 2 of this paragraph (h). The manufacturer must establish the malfunction criteria based on data from one or more representative engine(s) and provide an engineering evaluation for establishing the malfunction criteria for the remainder of the manufacturer's product line.

(B) Where no failure or deterioration of a component used for the cold start emission reduction strategy could result in an engine's emissions exceeding the applicable emissions thresholds, the individual component must be monitored for proper functional response while the control strategy is active in accordance with the malfunction criteria in paragraphs (i)(3)(ii) and (i)(3)(iii) of this section.

(iii) *Cold start strategy monitoring conditions*. The manufacturer must define monitoring conditions for malfunctions identified in paragraph (h)(4)(ii) of this section in accordance with paragraphs (c) and (d) of this section.

(iv) *Cold start strategy MIL activation and DTC storage*. The MIL must activate and DTCs must be stored according to the provisions of paragraph (b) of this section.

(5) *Secondary air system monitoring*—(i) *General*. The OBD system on engines equipped with any form of secondary air delivery system must monitor the proper functioning of the secondary air delivery system including all air switching valve(s). The individual electronic components (e.g., actuators, valves, sensors) that are used in the secondary air system must be monitored in accordance with the comprehensive component requirements in paragraph (i)(3) of this section. For purposes of this paragraph (h)(5), ''air flow'' is defined as the air flow delivered by the secondary air system to the exhaust system. For engines using secondary air systems with multiple air flow paths/distribution points, the air flow to each bank (i.e., a group of cylinders that share a common exhaust manifold, catalyst, and control sensor) must be monitored in accordance with the malfunction criteria in paragraph (h)(5)(ii) of this section. Also for purposes of this paragraph (h)(5), ''normal operation'' is defined as the condition when the secondary air system is activated during catalyst and/or engine warm-up following engine start. ''Normal operation'' does not include the condition when the secondary air system is turned on intrusively for the sole purpose of monitoring.

(ii) *Secondary air system malfunction criteria*. (A) Except as provided in paragraph (h)(5)(ii)(C) of this section, the OBD system must detect a secondary air system malfunction prior to a decrease from the manufacturer's specified air flow during normal operation that would cause an engine's emissions to exceed the emissions thresholds for ''other monitors'' as shown in Table 2 of this paragraph (h).

(B) Except as provided in paragraph (h)(5)(ii)(C) of this section, the OBD system must detect a secondary air system malfunction prior to an increase from the manufacturer's specified air flow during normal operation that would cause an engine's emissions to exceed the emissions thresholds for ''other monitors'' as shown in Table 2 of this paragraph (h).

(C) For engines in which no deterioration or failure of the secondary air system would result in an engine's emissions exceeding the applicable emissions thresholds, the OBD system must detect a malfunction when no detectable amount of air flow is delivered by the secondary air system during normal operation.

(iii) *Secondary air system monitoring conditions.* The manufacturer must define monitoring conditions for malfunctions identified in paragraph (h)(5)(ii) of this section in accordance with paragraphs (c) and (d) of this section. For purposes of tracking and reporting as required by paragraph (d)(1) of this section, all monitors used to detect malfunctions identified in paragraph (h)(5)(ii) of this section must be tracked separately but reported as a single set of values as specified in paragraph (e)(1)(iii) of this section.

(iv) *Secondary air system MIL activation and DTC storage.* The MIL must activate and DTCs must be stored according to the provisions of paragraph (b) of this section.

(6) *Catalyst system monitoring*—(i) *General.* The OBD system must monitor the catalyst system for proper conversion capability.

(ii) *Catalyst system malfunction criteria.* The OBD system must detect a catalyst system malfunction when the catalyst system's conversion capability decreases to the point that emissions exceed the emissions thresholds for the catalyst system as shown in Table 2 of this paragraph (h).

(iii) *Catalyst system monitoring conditions.* The manufacturer must define monitoring conditions for malfunctions identified in paragraph (h)(6)(ii) of this section in accordance with paragraphs (c) and (d) of this section. For purposes of tracking and reporting as required by paragraph (d)(1) of this section, all monitors used to detect malfunctions identified in paragraph (h)(6)(ii) of this section must be tracked separately but reported as a single set of values as specified in paragraph (e)(1)(iii) of this section.

(iv) *Catalyst system MIL activation and DTC storage.* (A) The MIL must activate and DTCs must be stored according to the provisions of paragraph (b) of this section.

(B) The monitoring method for the catalyst system must be capable of detecting when a catalyst DTC has been erased (except OBD system self erasure), but the catalyst has not been replaced (e.g., catalyst overtemperature histogram approaches are not acceptable).

(7) *Evaporative system monitoring*—(i) *General.* The OBD system must verify purge flow from the evaporative system and monitor the complete evaporative system, excluding the tubing and connections between the purge valve and the intake manifold, for vapor leaks to the atmosphere. Individual components of the evaporative system (e.g. valves, sensors) must be monitored in accordance with the comprehensive components requirements in paragraph (i)(3) of this section.

(ii) *Evaporative system malfunction criteria*—(A) *Purge monitor.* The OBD system must detect an evaporative system malfunction when no purge flow from the evaporative system to the engine can be detected by the OBD system.

(B) *Leak monitor.* The OBD system must detect an evaporative system malfunction when the complete evaporative system contains a leak or leaks that cumulatively are greater than or equal to a leak caused by a 0.150 inch diameter hole.

(C) The manufacturer may demonstrate that detection of a larger hole is more appropriate than that specified in paragraph (h)(7)(ii)(B) of this section. To do so, the manufacturer must demonstrate through data and/or engineering analyses that holes smaller than the proposed detection size would not result in evaporative or running loss emissions that exceed 1.5 times the applicable evaporative emissions standards. Upon such a demonstration, the proposed detection size could be substituted for the requirement of paragraph (h)(7)(ii)(B) of this section.

(iii) *Evaporative system monitoring conditions.* (A) The manufacturer must define monitoring conditions for malfunctions identified in paragraph (h)(7)(ii)(A) of this section in accordance with paragraphs (c) and (d) of this section.

(B) The manufacturer must define monitoring conditions for malfunctions identified in paragraph (h)(7)(ii)(B) of this section in accordance with paragraphs (c) and (d) of this section. For purposes of tracking and reporting as required by paragraph (d)(1) of this section, all monitors used to detect malfunctions identified in paragraph (h)(7)(ii)(B) of this section

must be tracked separately but reported as a single set of values as specified in paragraph (e)(1)(iii) of this section.

(C) The manufacturer may disable or abort an evaporative system monitor when the fuel tank level is over 85 percent of nominal tank capacity or during a refueling event.

(D) The manufacturer may request Administrator approval to run the evaporative system monitor during only those drive cycles characterized as cold starts provided such a condition is needed to ensure reliable monitoring. In making the request, the manufacturer must demonstrate through data and/or engineering analyses that a reliable monitor can only be run on drive cycles that begin with a specific set of cold start criteria. A set of cold start criteria based solely on ambient temperature exceeding engine coolant temperature will not be acceptable.

(E) The OBD system may disable temporarily the evaporative purge system to run an evaporative system leak monitor.

(iv) *Evaporative system MIL activation and DTC storage.* (A) Except as provided for in paragraph (h)(7)(iv)(B) of this section, the MIL must activate and DTCs must be stored according to the provisions of paragraph (b) of this section.

(B) If the OBD system is capable of discerning that a system leak is being caused by a missing or improperly secured gas cap, the OBD system need not activate the MIL or store a DTC provided the vehicle is equipped with an alternative indicator for notifying the operator of the gas cap problem. The alternative indicator must be of sufficient illumination and location to be readily visible under all lighting conditions. If the vehicle is not equipped with such an alternative indicator, the MIL must activate and a DTC be stored as required in paragraph (h)(7)(iv)(A) of this section; however, these may be deactivated and erased, respectively, if the OBD system determines that the gas cap problem has been corrected and the MIL has not been activated for any other malfunction. The Administrator may approve other strategies that provide equivalent assurance that a vehicle operator will be notified promptly of a missing or improperly secured gas cap and that corrective action will be undertaken.

(8) *Exhaust gas sensor monitoring*—(i) *General.* (A) The OBD system must monitor for malfunctions the output signal, response rate, and any other parameter that can affect emissions of all primary (i.e., fuel control) exhaust gas sensors (e.g., oxygen, wide-range air/fuel). Both the lean-to-rich and rich-to-lean response rates must be monitored.

(B) The OBD system must also monitor all secondary exhaust gas sensors (those used for secondary fuel trim control or as a monitoring device) for proper output signal, activity, and response rate.

(C) For engines equipped with heated exhaust gas sensor, the OBD system must monitor the heater for proper performance.

(ii) *Primary exhaust gas sensor malfunction criteria.* (A) The OBD system must detect a malfunction prior to any failure or deterioration of the exhaust gas sensor output voltage, resistance, impedance, current, response rate, amplitude, offset, or other characteristic(s) (including drift or bias corrected for by secondary sensors) that would cause an engine's emissions to exceed the emissions thresholds for ''other monitors'' as shown in Table 2 of this paragraph (h).

(B) The OBD system must detect malfunctions of the exhaust gas sensor caused by either a lack of circuit continuity or out-of-range values.

(C) The OBD system must detect a malfunction of the exhaust gas sensor when a sensor failure or deterioration causes the fuel system to stop using that sensor as a feedback input (e.g., causes default or open-loop operation).

(D) The OBD system must detect a malfunction of the exhaust gas sensor when the sensor output voltage, resistance, impedance, current, amplitude, activity, or other characteristics are no longer sufficient for use as an OBD system monitoring device (e.g., for catalyst monitoring).

(iii) *Secondary exhaust gas sensor malfunction criteria.* (A) The OBD system must detect a malfunction prior to any failure or deterioration of the exhaust

gas sensor voltage, resistance, impedance, current, response rate, amplitude, offset, or other characteristic(s) that would cause an engine's emissions to exceed the emissions thresholds for ''other monitors'' as shown in Table 2 of this paragraph (h).

(B) The OBD system must detect malfunctions of the exhaust gas sensor caused by a lack of circuit continuity.

(C) To the extent feasible, the OBD system must detect a malfunction of the exhaust gas sensor when the sensor output voltage, resistance, impedance, current, amplitude, activity, offset, or other characteristics are no longer sufficient for use as an OBD system monitoring device (e.g., for catalyst monitoring).

(D) The OBD system must detect malfunctions of the exhaust gas sensor caused by out-of-range values.

(E) The OBD system must detect a malfunction of the exhaust gas sensor when a sensor failure or deterioration causes the fuel system (e.g., fuel control) to stop using that sensor as a feedback input (e.g., causes default or open-loop operation).

(iv) *Exhaust gas sensor heater malfunction criteria.* (A) The OBD system must detect a malfunction of the heater performance when the current or voltage drop in the heater circuit is no longer within the manufacturer's specified limits for normal operation (i.e., within the criteria required to be met by the component vendor for heater circuit performance at high mileage). Other malfunction criteria for heater performance malfunctions may be used upon demonstrating via data or engineering analyses that the monitoring reliability and timeliness is equivalent to the stated criteria in this paragraph (h)(8)(iv)(A).

(B) The OBD system must detect malfunctions of the heater circuit including open or short circuits that conflict with the commanded state of the heater (e.g., shorted to 12 Volts when commanded to 0 Volts (ground)).

(v) *Primary exhaust gas sensor monitoring conditions.* (A) The manufacturer must define monitoring conditions for malfunctions identified in paragraphs (h)(8)(ii)(A) and (h)(8)(ii)(D) of this section in accordance with paragraphs (c) and (d) of this section. For purposes of tracking and reporting as required by paragraph (d)(1) of this section, all monitors used to detect malfunctions identified in paragraphs (h)(8)(ii)(A) and (h)(8)(ii)(D) of this section must be tracked separately but reported as a single set of values as specified in paragraph (e)(1)(iii) of this section.

(B) Except as provided for in paragraph (h)(8)(v)(C) of this section, monitoring for malfunctions identified in paragraphs (h)(8)(ii)(B) and (h)(8)(ii)(C) of this section must be conducted continuously.

(C) The manufacturer may disable continuous primary exhaust gas sensor monitoring when a primary exhaust gas sensor malfunction cannot be distinguished from other effects (e.g., disable out-of-range low monitoring during fuel cut conditions). To do so, the manufacturer must demonstrate via data or engineering analyses that a properly functioning sensor cannot be distinguished from a malfunctioning sensor and that the disablement interval is limited only to that necessary for avoiding false detection.

(vi) *Secondary exhaust gas sensor monitoring conditions.* (A) The manufacturer must define monitoring conditions for malfunctions identified in paragraphs (h)(8)(iii)(A) through (h)(8)(iii)(C) of this section in accordance with paragraphs (c) and (d) of this section.

(B) Except as provided for in paragraph (h)(8)(vi)(C) of this section, monitoring for malfunctions identified in paragraphs (h)(8)(iii)(D) and (h)(8)(iii)(E) of this section must be conducted continuously.

(C) The manufacturer may disable continuous secondary exhaust gas sensor monitoring when a secondary exhaust gas sensor malfunction cannot be distinguished from other effects (e.g., disable out-of-range low monitoring during fuel cut conditions). To do so, the manufacturer must demonstrate via data or engineering analyses that a properly functioning sensor cannot be distinguished from a malfunctioning sensor and that the disablement interval is limited only to that necessary for avoiding false detection.

(vii) *Exhaust gas sensor heater monitoring conditions.* (A) The manufacturer must define monitoring conditions for malfunctions identified in paragraph

(h)(8)(iv)(A) of this section in accordance with paragraphs (c) and (d) of this section.

(B) Monitoring for malfunctions identified in paragraph (h)(8)(iv)(B) of this section must be conducted continuously.

(viii) *Exhaust gas sensor MIL activation and DTC storage.* The MIL must activate and DTCs must be stored according to the provisions of paragraph (b) of this section.

(9) *Variable valve timing (VVT) system monitoring*—(i) *General.* The OBD system must monitor the VVT system on engines so equipped for target error and slow response malfunctions. The individual electronic components (e.g., actuators, valves, sensors) that are used in the VVT system must be monitored in accordance with the comprehensive components requirements in paragraph (i)(3).

(ii) *VVT system malfunction criteria*—(A) *VVT system target error.* The OBD system must detect a malfunction prior to any failure or deterioration in the capability of the VVT system to achieve the commanded valve timing and/or control within a crank angle and/or lift tolerance that would cause an engine's emissions to exceed the emission thresholds for ''other monitors'' as shown in Table 2 of this paragraph (h).

(B) *VVT slow response.* The OBD system must detect a malfunction prior to any failure or deterioration in the capability of the VVT system to achieve the commanded valve timing and/or control within a manufacturer-specified time that would cause an engine's emissions to exceed the emission thresholds for ''other monitors'' as shown in Table 2 of this paragraph (h).

(C) For engines in which no failure or deterioration of the VVT system could result in an engine's emissions exceeding the applicable emissions thresholds of paragraphs (h)(9)(ii)(A) and (h)(9)(ii)(B) of this section, the OBD system must detect a malfunction of the VVT system when proper functional response of the system to computer commands does not occur.

(iii) *VVT system monitoring conditions.* Manufacturers must define the monitoring conditions for VVT system malfunctions identified in paragraph (h)(9)(ii) in accordance with paragraphs (c) and (d) of this section, with the exception that monitoring must occur every time the monitoring conditions are met during the drive cycle rather than once per drive cycle as required in paragraph (c)(2) of this section. For purposes of tracking and reporting as required in paragraph (d)(1) of this section, all monitors used to detect malfunctions identified in paragraph (h)(9)(ii) must be tracked separately but reported as a single set of values as specified in paragraph (e)(1)(iii) of this section.

(iv) *VVT MIL activation and DTC storage.* The MIL must activate and DTCs must be stored according to the provisions of paragraph (b) of this section.

(i) *OBD monitoring requirements for all engines*—(1) *Engine cooling system monitoring*—(i) *General.* (A) The OBD system must monitor the thermostat on engines so equipped for proper operation.

(B) The OBD system must monitor the engine coolant temperature (ECT) sensor for electrical circuit continuity, out-of-range values, and rationality malfunctions.

(C) For engines that use a system other than the cooling system and ECT sensor (e.g., oil temperature, cylinder head temperature) to determine engine operating temperature for emission control purposes (e.g., to modify spark or fuel injection timing or quantity), the manufacturer may forego cooling system monitoring and instead monitor the components or systems used in their approach. To do so, the manufacturer must to submit data and/or engineering analyses that demonstrate that their monitoring plan is as reliable and effective as the monitoring required in this paragraph (i)(1).

(ii) *Malfunction criteria for the thermostat.* (A) The OBD system must detect a thermostat malfunction if, within the manufacturer specified time interval following engine start, any of the following conditions occur: The coolant temperature does not reach the highest temperature required by the OBD system to enable other diagnostics; and, the coolant temperature does not reach a warmed-up temperature within 20 degrees Fahrenheit of the manufacturer's nominal thermostat regulating temperature. For the second of these two

conditions, the manufacturer may use a lower temperature for this criterion if either the manufacturer can demonstrate that the fuel, spark timing, and/or other coolant temperature-based modification to the engine control strategies would not cause an emissions increase greater than or equal to 50 percent of any of the applicable emissions standards; or, ambient air temperature is between 20 degrees Fahrenheit and 50 degrees Fahrenheit in which case, upon Administrator approval, the minimum coolant temperature required to be reached may be decreased based on the ambient air temperature.

(B) With Administrator approval, the manufacturer may use alternative malfunction criteria to those of paragraph (i)(1)(ii)(A) of this section and/or alternative monitoring conditions to those of paragraph (i)(1)(iv) of this section that are a function of temperature at engine start on engines that do not reach the temperatures specified in the malfunction criteria when the thermostat is functioning properly. To do so, the manufacturer is required to submit data and/or engineering analyses that demonstrate that a properly operating system does not reach the specified temperatures and that the possibility is minimized for cooling system malfunctions to go undetected thus disabling other OBD monitors.

(C) The manufacturer may request Administrator approval to forego monitoring of the thermostat if the manufacturer can demonstrate that a malfunctioning thermostat cannot cause a measurable increase in emissions during any reasonable driving condition nor cause any disablement of other OBD monitors.

(iii) *Malfunction criteria for the ECT sensor*—(A) *Circuit integrity*. The OBD system must detect malfunctions of the ECT sensor related to a lack of circuit continuity or out-of-range values.

(B) *Time to reach closed-loop/feedback enable temperature*. The OBD system must detect if, within the manufacturer specified time interval following engine start, the ECT sensor does not achieve the highest stabilized minimum temperature that is needed to initiate closed-loop/feedback control of all affected emission control systems (e.g., fuel system, EGR system). The manufacturer specified time interval must be a function of the engine coolant temperature and/or intake air temperature at startup. The manufacturer time interval must be supported by data and/or engineering analyses demonstrating that it provides robust monitoring and minimizes the likelihood of other OBD monitors being disabled. The manufacturer may forego the requirements of this paragraph (i)(1)(iii)(B) provided the manufacturer does not use engine coolant temperature or the ECT sensor to enable closed-loop/feedback control of any emission control systems.

(C) *Stuck in range below the highest minimum enable temperature*. To the extent feasible when using all available information, the OBD system must detect a malfunction if the ECT sensor inappropriately indicates a temperature below the highest minimum enable temperature required by the OBD system to enable other monitors (e.g., an OBD system that requires ECT to be greater than 140 degrees Fahrenheit to enable a diagnostic must detect malfunctions that cause the ECT sensor to inappropriately indicate a temperature below 140 degrees Fahrenheit). The manufacturer may forego this requirement for temperature regions in which the monitors required under paragraphs (i)(1)(ii) or (i)(1)(iii)(B) of this section will detect ECT sensor malfunctions as defined in this paragraph (i)(1)(iii)(C).

(D) *Stuck in range above the lowest maximum enable temperature*. The OBD system must detect a malfunction if the ECT sensor inappropriately indicates a temperature above the lowest maximum enable temperature required by the OBD system to enable other monitors (e.g., an OBD system that requires an engine coolant temperature less than 90 degrees Fahrenheit at startup prior to enabling an OBD monitor must detect malfunctions that cause the ECT sensor to indicate inappropriately a temperature above 90 degrees Fahrenheit). The manufacturer may forego this requirement within temperature regions in which the monitors required under paragraphs (i)(1)(ii), (i)(1)(iii)(B), (i)(1)(iii)(C) of this section will detect ECT sensor

malfunctions as defined in this paragraph (i)(1)(iii)(D) or in which the MIL will be activated according to the provisions of paragraph (b)(2)(v) of this section. The manufacturer may also forego this monitoring within temperature regions where a temperature gauge on the instrument panel indicates a temperature in the ''red zone'' (engine overheating zone) and displays the same temperature information as used by the OBD system.

(iv) *Monitoring conditions for the thermostat.* (A) The manufacturer must define the monitoring conditions for malfunctions identified in paragraph (i)(1)(ii)(A) of this section in accordance with paragraph (c) of this section. Additionally, except as provided for in paragraphs (i)(1)(iv)(B) and (i)(1)(iv)(C) of this section, monitoring for malfunctions identified in paragraph (i)(1)(ii)(A) of this section must be conducted once per drive cycle on every drive cycle in which the ECT sensor indicates, at engine start, a temperature lower than the temperature established as the malfunction criteria in paragraph (i)(1)(ii)(A) of this section.

(B) The manufacturer may disable thermostat monitoring at ambient engine start temperatures below 20 degrees Fahrenheit.

(C) The manufacturers may request Administrator approval to suspend or disable thermostat monitoring if the engine is subjected to conditions that could lead to false diagnosis. To do so, the manufacturer must submit data and/or engineering analyses that demonstrate that the suspension or disablement is necessary. In general, the manufacturer will not be allowed to suspend or disable the thermostat monitor on engine starts where the engine coolant temperature at engine start is more than 35 degrees Fahrenheit lower than the thermostat malfunction threshold temperature determined under paragraph (i)(1)(ii)(A) of this section.

(v) *Monitoring conditions for the ECT sensor.* (A) Except as provided for in paragraph (i)(1)(v)(D) of this section, the OBD system must monitor continuously for malfunctions identified in paragraph monitoring for malfunctions identified in paragraph (i)(1)(iii)(A) of this section (i.e., circuit integrity and out-of-range).

(B) The manufacturer must define the monitoring conditions for malfunctions identified in paragraph (i)(1)(iii)(B) of this section in accordance with paragraph (c) of this section. Additionally, except as provided for in paragraph (i)(1)(v)(D) of this section, monitoring for malfunctions identified in paragraph (i)(1)(iii)(B) of this section must be conducted once per drive cycle on every drive cycle in which the ECT sensor indicates a temperature lower than the closed-loop enable temperature at engine start (i.e., all engine start temperatures greater than the ECT sensor out-of-range low temperature and less than the closed-loop enable temperature).

(C) The manufacturer must define the monitoring conditions for malfunctions identified in paragraphs (i)(1)(iii)(C) and (i)(1)(iii)(D) of this section in accordance with paragraphs (c) and (d) of this section.

(D) The manufacturer may suspend or delay the monitor for the time to reach closed-loop enable temperature if the engine is subjected to conditions that could lead to false diagnosis (e.g., vehicle operation at idle for more than 50 to 75 percent of the warm-up time).

(E) The manufacturer may request Administrator approval to disable continuous ECT sensor monitoring when an ECT sensor malfunction cannot be distinguished from other effects. To do so, the manufacturer must submit data and/or engineering analyses that demonstrate a properly functioning sensor cannot be distinguished from a malfunctioning sensor and that the disablement interval is limited only to that necessary for avoiding false detection.

(vi) *Engine cooling system MIL activation and DTC storage.* The MIL must activate and DTCs must be stored according to the provisions of paragraph (b) of this section.

(2) *Crankcase ventilation (CV) system monitoring*—(i) *General.* The OBD system must monitor the CV system on engines so equipped for system integrity. Engines not required to be equipped with CV systems are exempt from monitoring the CV system. For diesel engines, the manufacturer must

submit a plan for Administrator approval prior to OBD certification. That plan must include descriptions of the monitoring strategy, malfunction criteria, and monitoring conditions for CV system monitoring. The plan must demonstrate that the CV system monitor is of equivalent effectiveness, to the extent feasible, to the malfunction criteria and the monitoring conditions of this paragraph (i)(2).

(ii) *Crankcase ventilation system malfunction criteria.* (A) For the purposes of this paragraph (i)(2), ''CV system'' is defined as any form of crankcase ventilation system, regardless of whether it utilizes positive pressure. ''CV valve'' is defined as any form of valve or orifice used to restrict or control crankcase vapor flow. Further, any additional external CV system tubing or hoses used to equalize crankcase pressure or to provide a ventilation path between various areas of the engine (e.g., crankcase and valve cover) are considered part of the CV system ''between the crankcase and the CV valve'' and subject to the malfunction criteria in paragraph (i)(2)(ii)(B) of this section.

(B) Except as provided for in paragraphs (i)(2)(ii)(C) through (i)(2)(ii)(E) of this section, the OBD system must detect a malfunction of the CV system when a disconnection of the system occurs between either the crankcase and the CV valve, or between the CV valve and the intake manifold.

(C) The manufacturer may forego monitoring for a disconnection between the crankcase and the CV valve provided the CV system is designed such that the CV valve is fastened directly to the crankcase such that it is significantly more difficult to remove the CV valve from the crankcase than to disconnect the line between the CV valve and the intake manifold (taking aging effects into consideration). To do so, the manufacturer must be able to provide data and/or an engineering evaluation demonstrating that the CV system is so designed.

(D) The manufacturer may forego monitoring for a disconnection between the crankcase and the CV valve provided the CV system is designed such that it uses tubing connections between the CV valve and the crankcase that are: resistant to deterioration or accidental disconnection; significantly more difficult to disconnect than is the line between the CV valve and the intake manifold; and, not subject to disconnection per the manufacturer's repair procedures for any non-CV system repair. To do so, the manufacturer must be able to provide data and/or engineering evaluation demonstrating that the CV system is so designed.

(E) The manufacturer may forego monitoring for a disconnection between the CV valve and the intake manifold provided the CV system is designed such that any disconnection either causes the engine to stall immediately during idle operation, or is unlikely to occur due to a CV system design that is integral to the induction system (e.g., machined passages rather than tubing or hoses). To do so, the manufacturer must be able to provide data and/or an engineering evaluation demonstrating that the CV system is so designed.

(iii) *Crankcase ventilation system monitoring conditions.* The manufacturer must define the monitoring conditions for malfunctions identified in paragraph (i)(2) of this section in accordance with paragraphs (c) and (d) of this section.

(iv) *Crankcase ventilation system MIL activation and DTC storage.* The MIL must activate and DTCs must be stored according to the provisions of paragraph (b) of this section. The stored DTC need not identify specifically the CV system (e.g., a DTC for idle speed control or fuel system monitoring can be stored) if the manufacturer can demonstrate that additional monitoring hardware is necessary to make such an identification and provided the manufacturer's diagnostic and repair procedures for the detected malfunction include directions to check the integrity of the CV system.

(3) *Comprehensive component monitoring*—(i) *General.* Except as provided for in paragraph (i)(4) of this section, the OBD system must detect a malfunction of any electronic engine component or system not otherwise described in paragraphs (g), (h), (i)(1), and (i)(2) of this section that either provides input to (directly or indirectly, such components may include the

crank angle sensor, knock sensor, throttle position sensor, cam position sensor, intake air temperature sensor, boost pressure sensor, manifold pressure sensor, mass air flow sensor, exhaust temperature sensor, exhaust pressure sensor, fuel pressure sensor, fuel composition sensor of a flexible fuel vehicle, etc.) or receives commands from (such components or systems may include the idle speed control system, glow plug system, variable length intake manifold runner systems, supercharger or turbocharger electronic components, heated fuel preparation systems, the wait-to-start lamp on diesel applications, the MIL, etc.) the onboard computer(s) and meets either of the criteria described in paragraphs (i)(3)(i)(A) and/or (i)(3)(i)(B) of this section. Note that, for the purposes of this paragraph (i)(3), ''electronic engine component or system'' does not include components that are driven by the engine and are not related to the control of the fueling, air handling, or emissions of the engine (e.g., PTO components, air conditioning system components, and power steering components).

(A) It can cause emissions to exceed applicable emission standards. To preclude monitoring, the manufacturer must be able to provide emission data showing that the component or system, when malfunctioning and installed on a suitable test engine, does not cause emissions to exceed the emission standards.

(B) It is used as part of the monitoring strategy for any other monitored system or component.

(ii) *Comprehensive component malfunction criteria for input components.* (A) The OBD system must detect malfunctions of input components caused by a lack of circuit continuity and out-of-range values. In addition, where feasible, rationality checks must also be done and shall verify that a sensor output is neither inappropriately high nor inappropriately low (i.e., ''two-sided'' monitoring).

(B) To the extent feasible, the OBD system must separately detect and store different DTCs that distinguish rationality malfunctions from lack of circuit continuity and out-of-range malfunctions. For lack of circuit continuity and out-of-range malfunctions, the OBD system must, to the extent feasible, separately detect and store different DTCs for each distinct malfunction (e.g., out-of-range low, out-of-range high, open circuit). The OBD system is not required to store separate DTCs for lack of circuit continuity malfunctions that cannot be distinguished from other out-of-range circuit malfunctions.

(C) For input components that are used to activate alternative strategies that can affect emissions (e.g., AECDs, engine shutdown systems), the OBD system must conduct rationality checks to detect malfunctions that cause the system to activate erroneously or deactivate the alternative strategy. To the extent feasible when using all available information, the rationality check must detect a malfunction if the input component inappropriately indicates a value that activates or deactivates the alternative strategy. For example, for an alternative strategy that activates when the intake air temperature is greater than 120 degrees Fahrenheit, the OBD system must detect malfunctions that cause the intake air temperature sensor to indicate inappropriately a temperature above 120 degrees Fahrenheit.

(D) For engines that require precise alignment between the camshaft and the crankshaft, the OBD system must monitor the crankshaft position sensor(s) and camshaft position sensor(s) to verify proper alignment between the camshaft and crankshaft in addition to monitoring the sensors for circuit continuity and proper rationality. Proper alignment monitoring between a camshaft and a crankshaft is required only in cases where both are equipped with position sensors. For engines equipped with VVT systems and a timing belt or chain, the OBD system must detect a malfunction if the alignment between the camshaft and crankshaft is off by one or more cam/crank sprocket cogs (e.g., the timing belt/chain has slipped by one or more teeth/cogs). If a manufacturer demonstrates that a single tooth/cog misalignment cannot cause a measurable increase in emissions during any reasonable driving condition, the OBD system must detect a malfunction when the minimum number of

teeth/cogs misalignment has occurred that does cause a measurable emission increase.

(iii) *Comprehensive component malfunction criteria for output components/systems.* (A) The OBD system must detect a malfunction of an output component/system when proper functional response does not occur in response to computer commands. If such a functional check is not feasible, the OBD system must detect malfunctions of output components/systems caused by a lack of circuit continuity or circuit malfunction (e.g., short to ground or high voltage). For output component lack of circuit continuity malfunctions and circuit malfunctions, the OBD system is not required to store different DTCs for each distinct malfunction (e.g., open circuit, shorted low). Manufacturers are not required to activate an output component/system when it would not normally be active for the sole purpose of performing a functional check of it as required in this paragraph (i)(3).

(B) For gasoline engines, the idle control system must be monitored for proper functional response to computer commands. For gasoline engines using monitoring strategies based on deviation from target idle speed, a malfunction must be detected when either of the following conditions occurs: The idle speed control system cannot achieve the target idle speed within 200 revolutions per minute (rpm) above the target speed or 100 rpm below the target speed; or, the idle speed control system cannot achieve the target idle speed within the smallest engine speed tolerance range required by the OBD system to enable any other monitors. Regarding the former of these conditions, the manufacturer may use larger engine speed tolerances. To do so, the manufacturer must be able to provide data and/or engineering analyses that demonstrate that the tolerances can be exceeded without a malfunction being present.

(C) For diesel engines, the idle control system must be monitored for proper functional response to computer commands. For diesel engines, a malfunction must be detected when either of the following conditions occurs: the idle fuel control system cannot achieve the target idle speed or fuel injection quantity within ±50 percent of the manufacturer-specified fuel quantity and engine speed tolerances; or, the idle fuel control system cannot achieve the target idle speed or fueling quantity within the smallest engine speed or fueling quantity tolerance range required by the OBD system to enable any other monitors.

(D) For model years 2010 through 2012, glow plugs must be monitored for circuit continuity malfunctions. For model years 2010 and later, intake air heater systems and, for model years 2013 and later, glow plugs must be monitored for proper functional response to computer commands and for circuit continuity malfunctions. The glow plug/intake air heater circuit(s) must be monitored for proper current and voltage drop. The manufacturer may use other monitoring strategies but must be able to provide data and/or engineering analyses that demonstrate reliable and timely detection of malfunctions. The OBD system must also detect a malfunction when a single glow plug no longer operates within the manufacturer's specified limits for normal operation. If a manufacturer can demonstrate that a single glow plug malfunction cannot cause a measurable increase in emissions during any reasonable driving condition, the OBD system must instead detect a malfunction when the number of glow plugs needed to cause an emission increase is malfunctioning. To the extent feasible, the stored DTC must identify the specific malfunctioning glow plug(s).

(E) The wait-to-start lamp circuit and the MIL circuit must be monitored for malfunctions that cause either lamp to fail to activate when commanded to do so (e.g., burned out bulb). This monitoring of the wait-to-start lamp circuit and the MIL circuit is not required for wait-to-start lamps and MILs using light-emitting diodes (LEDs).

(iv) *Monitoring conditions for input components.* (A) The OBD system must monitor input components continuously for out-of-range values and circuit continuity. The manufacturer may disable continuous monitoring for circuit continuity and out-of-range values

when a malfunction cannot be distinguished from other effects. To do so, the manufacturer must be able to provide data and/or engineering analyses that demonstrate that a properly functioning input component cannot be distinguished from a malfunctioning input component and that the disablement interval is limited only to that necessary for avoiding false malfunction detection.

(B) For input component rationality checks (where applicable), the manufacturer must define the monitoring conditions for detecting malfunctions in accordance with paragraphs (c) and (d) of this section, with the exception that rationality checks must occur every time the monitoring conditions are met during the drive cycle rather than once per drive cycle as required in paragraph (c)(2) of this section.

(v) *Monitoring conditions for output components/systems.* (A) The OBD system must monitor output components/systems continuously for circuit continuity and circuit malfunctions. The manufacturer may disable continuous monitoring for circuit continuity and circuit malfunctions when a malfunction cannot be distinguished from other effects. To do so, the manufacturer must be able to provide data and/or engineering analyses that demonstrate that a properly functioning output component/system cannot be distinguished from a malfunctioning one and that the disablement interval is limited only to that necessary for avoiding false malfunction detection.

(B) For output component/system functional checks, the manufacturer must define the monitoring conditions for detecting malfunctions in accordance with paragraphs (c) and (d) of this section. Specifically for the idle control system, the manufacturer must define the monitoring conditions for detecting malfunctions in accordance with paragraphs (c) and (d) of this section, with the exception that functional checks must occur every time the monitoring conditions are met during the drive cycle rather than once per drive cycle as required in paragraph (c)(2) of this section.

(vi) *Comprehensive component MIL activation and DTC storage.* (A) Except as provided for in paragraphs (i)(3)(vi)(B) and (i)(3)(vi)(C) of this section, the MIL must activate and DTCs must be stored according to the provisions of paragraph (b) of this section.

(B) The MIL need not be activated in conjunction with storing a MIL-on DTC for any comprehensive component if: the component or system, when malfunctioning, could not cause engine emissions to increase by 15 percent or more of the applicable FTP standard during any reasonable driving condition; or, the component or system is not used as part of the monitoring strategy for any other system or component that is required to be monitored.

(C) The MIL need not be activated if a malfunction has been detected in the MIL circuit that prevents the MIL from activating (e.g., burned out bulb or light-emitting diode, LED). Nonetheless, the electronic MIL status (see paragraph (k)(4)(ii) of this section) must be reported as MIL commanded-on and a MIL-on DTC must be stored.

(4) *Other emission control system monitoring*—(i) *General.* For other emission control systems that are either not addressed in paragraphs (g) through (i)(3) of this section (e.g., hydrocarbon traps, homogeneous charge compression ignition control systems), or addressed in paragraph (i)(3) of this section but not corrected or compensated for by an adaptive control system (e.g., swirl control valves), the manufacturer must submit a plan for Administrator approval of the monitoring strategy, malfunction criteria, and monitoring conditions prior to introduction on a production engine. The plan must demonstrate the effectiveness of the monitoring strategy, the malfunction criteria used, the monitoring conditions required by the monitor, and, if applicable, the determination that the requirements of paragraph (i)(4)(ii) of this section are satisfied.

(ii) For engines that use emission control systems that alter intake air flow or cylinder charge characteristics by actuating valve(s), flap(s), etc., in the intake air delivery system (e.g., swirl control valve systems), the manufacturer, in addition to meeting the requirements of paragraph (i)(4)(i) of this section, may elect to have the OBD system monitor the shaft to which all

valves in one intake bank are physically attached rather than performing a functional check of the intake air flow, cylinder charge, or individual valve(s)/flap(s). For non-metal shafts or segmented shafts, the monitor must verify all shaft segments for proper functional response (e.g., by verifying that the segment or portion of the shaft farthest from the actuator functions properly). For systems that have more than one shaft to operate valves in multiple intake banks, the manufacturer is not required to add more than one set of detection hardware (e.g., sensor, switch) per intake bank to meet this requirement.

(5) *Exceptions to OBD monitoring requirements.* (i) The Administrator may revise the PM filtering performance malfunction criteria for DPFs to exclude detection of specific failure modes such as partially melted substrates, if the most reliable monitoring method developed requires it.

(ii) The manufacturer may disable an OBD system monitor at ambient engine start temperatures below 20 degrees Fahrenheit (low ambient temperature conditions may be determined based on intake air or engine coolant temperature at engine start) or at elevations higher than 8,000 feet above sea level. To do so, the manufacturer must submit data and/or engineering analyses that demonstrate that monitoring is unreliable during the disable conditions. A manufacturer may request that an OBD system monitor be disabled at other ambient engine start temperatures by submitting data and/or engineering analyses demonstrating that misdiagnosis would occur at the given ambient temperatures due to their effect on the component itself (e.g., component freezing).

(iii) The manufacturer may disable an OBD system monitor when the fuel level is 15 percent or less of the nominal fuel tank capacity for those monitors that can be affected by low fuel level or running out of fuel (e.g., misfire detection). To do so, the manufacturer must submit data and/or engineering analyses that demonstrate that monitoring at the given fuel levels is unreliable, and that the OBD system is still able to detect a malfunction if the component(s) used to determine fuel level indicates erroneously a fuel level that causes the disablement.

(iv) The manufacturer may disable OBD monitors that can be affected by engine battery or system voltage levels.

(A) For an OBD monitor affected by low vehicle battery or system voltages, manufacturers may disable monitoring when the battery or system voltage is below 11.0 Volts. The manufacturer may use a voltage threshold higher than 11.0 Volts to disable monitors but must submit data and/or engineering analyses that demonstrate that monitoring at those voltages is unreliable and that either operation of a vehicle below the disablement criteria for extended periods of time is unlikely or the OBD system monitors the battery or system voltage and will detect a malfunction at the voltage used to disable other monitors.

(B) For an OBD monitor affected by high engine battery or system voltages, the manufacturer may disable monitoring when the battery or system voltage exceeds a manufacturer-defined voltage. To do so, the manufacturer must submit data and/or engineering analyses that demonstrate that monitoring above the manufacturer-defined voltage is unreliable and that either the electrical charging system/alternator warning light will be activated (or voltage gauge would be in the ''red zone'') or the OBD system monitors the battery or system voltage and will detect a malfunction at the voltage used to disable other monitors.

(v) The manufacturer may also disable affected OBD monitors in systems designed to accommodate the installation of power take off (PTO) units provided monitors are disabled only while the PTO unit is active and the OBD readiness status (see paragraph (k)(4)(i) of this section) is cleared by the onboard computer (i.e., all monitors set to indicate ''not complete'' or ''not ready'') while the PTO unit is activated. If monitors are so disabled and when the disablement ends, the readiness status may be restored to its state prior to PTO activation.

(6) *Feedback control system monitoring.* If the engine is equipped with feedback control of any of the systems covered

in paragraphs (g), (h) and (i) of this section, then the OBD system must detect as malfunctions the conditions specified in this paragraph (i)(6) for each of the individual feedback controls.

(i) The OBD system must detect when the system fails to begin feedback control within a manufacturer specified time interval.

(ii) When any malfunction or deterioration causes open loop or limp-home operation.

(iii) When feedback control has used up all of the adjustment allowed by the manufacturer.

(iv) A manufacturer may temporarily disable monitoring for malfunctions specified in paragraph (i)(6)(iii) of this section during conditions that the specific monitor cannot distinguish robustly between a malfunctioning system and a properly operating system. To do so, the manufacturer is required to submit data and/or engineering analyses demonstrating that the individual feedback control system, when operating as designed on an engine with all emission controls working properly, routinely operates during these conditions while having used up all of the adjustment allowed by the manufacturer. In lieu of detecting, with a system specific monitor, the malfunctions specified in paragraphs (i)(6)(i) and (i)(6)(ii) of this section the OBD system may monitor the individual parameters or components that are used as inputs for individual feedback control systems provided that the monitors detect all malfunctions that meet the criteria of paragraphs (i)(6)(i) and (i)(6)(ii) of this section.

(j) *Production evaluation testing*—(1) *Verification of standardization requirements*. (i) For model years 2013 and later, the manufacturer must perform testing to verify that production vehicles meet the requirements of paragraphs (k)(3) and (k)(4) of this section relevant to the proper communication of required emissions-related messages to a SAE J1978 or SAE J1939 (both as specified in paragraph (k)(1) of this section) scan tool.

(ii) *Selection of test vehicles*. (A) The manufacturer must perform this testing every model year on ten unique production vehicles (i.e., engine rating and chassis application combination) per engine family. If there are less than ten unique production vehicles for a certain engine family, the manufacturer must test each unique production vehicle in that engine family. The manufacturer must perform this testing within either three months of the start of engine production or one month of the start of vehicle production, whichever is later. The manufacturer may request approval to group multiple production vehicles together and test one representative vehicle per group. To do so, the software and hardware designed to comply with the standardization requirements of paragraph (k)(1) of this section (e.g., communication protocol message timing, number of supported data stream parameters, engine and vehicle communication network architecture) in the representative vehicle must be identical to all others in the group and any differences in the production vehicles cannot be relevant with respect to meeting the criteria of paragraph (j)(1)(iv) of this section.

(B) For 2016 and subsequent model years, the required number of vehicles to be tested shall be reduced to five per engine family provided zero vehicles fail the testing required by paragraph (j)(1) of this section for two consecutive years.

(C) For 2019 and subsequent model years, the required number of vehicles to be tested shall be reduced to three per engine family provided zero vehicles fail the testing required by paragraph (j)(1) of this section for three consecutive years.

(D) The requirement for submittal of data from one or more of the production vehicles shall be waived if data have been submitted previously for all of the production vehicles. The manufacturer may request approval to carry over data collected in previous model years. To do so, the software and hardware designed to comply with the standardization requirements of paragraph (k)(1) of this section must be identical to the previous model year and there must not have been other hardware or software changes that affect compliance with the standardization requirements.

(E) For hybrid engine families with projected U.S.-directed production volume of less than 5,000 engines, the manufacturers are only required to test one engine-hybrid combination per family.

(iii) *Test equipment*. For the testing required by paragraph (j)(1) of this section, the manufacturer shall use an off-board device to conduct the testing. The manufacturer must be able to show that the off-board device is able to verify that the vehicles tested using the device are able to perform all of the required functions in paragraph (j)(1)(iv) of this section with any other off-board device designed and built in accordance with the SAE J1978 or SAE J1939 (both as specified in paragraph (k)(1) of this section) generic scan tool specifications.

(iv) *Required testing*. The testing must verify that communication can be established properly between all emission-related on-board computers and a SAE J1978 or SAE J1939 (both as specified in paragraph (k)(1) of this section) scan tool designed to adhere strictly to the communication protocols allowed in paragraph (k)(3) of this section. The testing must also verify that all emission-related information is communicated properly between all emission-related on-board computers and a SAE J1978 or SAE J1939 (both as specified in paragraph (k)(1) of this section) scan tool in accordance with the requirements of paragraph (k)(1) of this section and the applicable ISO and SAE specifications including specifications for physical layer, network layer, message structure, and message content. The testing must also verify that the onboard computer(s) can properly respond to a SAE J1978 or SAE J1939 (both as specified in paragraph (k)(1) of this section) scan tool request to clear emissions-related DTCs and reset the ready status in accordance with paragraph (k)(4)(ix) of this section. The testing must further verify that the following information can be properly communicated to a SAE J1978 or SAE J1939 (both as specified in paragraph (k)(1) of this section) scan tool:

(A) The current ready status from all onboard computers required to support ready status in accordance with SAE J1978 or SAE J1939–73 (both as specified in paragraph (k)(1) of this section) and paragraph (k)(4)(i) of this section in the key-on, engine-off position and while the engine is running.

(B) The MIL command status while a deactivated MIL is commanded and while an activated MIL is commanded in accordance with SAE J1979 or SAE J1939 (both as specified in paragraph (k)(1) of this section) and paragraph (k)(4)(ii) of this section in the key-on, engine-off position and while the engine is running, and in accordance with SAE J1979 or SAE J1939 (both as specified in paragraph (k)(1) of this section) and paragraphs (b)(1)(ii) of this section during the MIL functional check, if applicable, and, if applicable, (k)(4)(i)(C) of this section during the MIL ready status check while the engine is off.

(C) All data stream parameters required in paragraph (k)(4)(ii) of this section in accordance with SAE J1979 or SAE J1939 (both as specified in paragraph (k)(1) of this section) including, if applicable, the proper identification of each data stream parameter as supported in SAE J1979 (e.g., Mode/Service $01, PID $00).

(D) The CAL ID, CVN, and VIN as required by paragraphs (k)(4)(vi), (k)(4)(vii), and (k)(4)(viii) of this section and in accordance with SAE J1979 or SAE J1939 (both as specified in paragraph (k)(1) of this section).

(E) An emissions-related DTC (permanent, pending, MIL-on, previous-MIL-on) in accordance with SAE J1979 or SAE J1939–73 (both as specified in paragraph (k)(1) of this section) including the correct indication of the number of stored DTCs (e.g., Mode/Service $01, PID $01, Data A for SAE J1979 (as specified in paragraph (k)(1) of this section)) and paragraph (k)(4)(iv) of this section.

(v) *Reporting of results*. The manufacturer must submit to the Administrator the following, based on the results of the testing required by paragraph (j)(1)(iv) of this section:

(A) If a variant meets all the requirements of paragraph (j)(1)(iv) of this section, a statement specifying that the variant passed all the tests. Upon request from the Administrator, the detailed results of any such testing may have to be submitted.

(B) If any variant does not meet the requirements paragraph (j)(1)(iv) of this section, a written report detailing the problem(s) identified and the manufacturer's proposed corrective action (if any) to remedy the problem(s). This report must be submitted within one month of testing the specific variant. The Administrator will consider the proposed remedy and, if in disagreement, will work with the manufacturer to propose an alternative remedy. Factors to be considered by the Administrator in considering the proposed remedy will include the severity of the problem(s), the ability of service technicians to access the required diagnostic information, the impact on equipment and tool manufacturers, and the amount of time prior to implementation of the proposed corrective action.

(vi) *Alternative testing protocols.* Manufacturers may request approval to use other testing protocols. To do so, the manufacturer must demonstrate that the alternative testing methods and equipment will provide an equivalent level of verification of compliance with the standardization requirements as is required by paragraph (j)(1) of this section.

(2) *Verification of monitoring requirements.* (i) Within either the first six months of the start of engine production or the first three months of the start of vehicle production, whichever is later, the manufacturer must conduct a complete evaluation of the OBD system of one or more production vehicles (test vehicles) and submit the results of the evaluation to the Administrator.

(ii) *Selection of test vehicles.* (A) For each engine selected for monitoring system demonstration in paragraph (l) of this section, the manufacturer must evaluate one production vehicle equipped with an engine from the same engine family and rating as the demonstration engine. The vehicle selection must be approved by the Administrator.

(B) If the manufacturer is required to test more than one test vehicle, the manufacturer may test an engine in lieu of a vehicle for all but one of the required test vehicles.

(C) The requirement for submittal of data from one or more of the test vehicles may be waived if data have been submitted previously for all of the engine ratings and variants.

(iii) *Evaluation requirements.* (A) The evaluation must demonstrate the ability of the OBD system on the selected test vehicle to detect a malfunction, activate the MIL, and, where applicable, store an appropriate DTC readable by a scan tool when a malfunction is present and the monitoring conditions have been satisfied for each individual monitor required by this section. For model years 2013 and later, the evaluation must demonstrate the ability of the OBD system on the selected test vehicle to detect a malfunction, activate the MIL, and, where applicable, store an appropriate DTC readable by a SAE J1978 or SAE J1939 (both as specified in paragraph (k)(1) of this section) scan tool when a malfunction is present and the monitoring conditions have been satisfied for each individual monitor required by this section.

(B) The evaluation must verify that the malfunction of any component used to enable another OBD monitor but that does not itself result in MIL activation (e.g., fuel level sensor) will not inhibit the ability of other OBD monitors to detect malfunctions properly.

(C) The evaluation must verify that the software used to track the numerator and denominator for the purpose of determining in-use monitoring frequency increments as required by paragraph (d)(2) of this section.

(D) Malfunctions may be implanted mechanically or simulated electronically, but internal onboard computer hardware or software changes shall not be used to simulate malfunctions. For monitors that are required to indicate a malfunction before emissions exceed an emission threshold, manufacturers are not required to use malfunctioning components/systems set exactly at their malfunction criteria limits. Emission testing is not required to confirm that the malfunction is detected before the appropriate emission thresholds are exceeded.

(E) The manufacturer must submit a proposed test plan for approval prior to performing evaluation testing. The test

plan must identify the method used to induce a malfunction for each monitor.

(F) If the demonstration of a specific monitor cannot be reasonably performed without causing physical damage to the test vehicle (e.g., onboard computer internal circuit malfunctions), the manufacturer may omit the specific demonstration.

(G) For evaluation of test vehicles selected in accordance with paragraph (j)(2)(ii) of this section, the manufacturer is not required to demonstrate monitors that were demonstrated prior to certification as required in paragraph (l) of this section.

(iv) The manufacturer must submit a report of the results of all testing conducted as required by paragraph (j)(2) of this section. The report must identify the method used to induce a malfunction in each monitor, the MIL activation status, and the DTC(s) stored.

(3) *Verification of in-use monitoring performance ratios.* (i) The manufacturer must collect and report in-use monitoring performance data representative of production vehicles (i.e., engine rating and chassis application combination). The manufacturer must collect and report the data to the Administrator within 12 months after the first production vehicle was first introduced into commerce.

(ii) The manufacturer must separate production vehicles into the monitoring performance groups and submit data that represents each of these groups. The groups shall be based on the following criteria:

(A) Emission control system architecture. All engines that use the same or similar emissions control system architecture (e.g., EGR with DPF and SCR; EGR with DPF and NO_X adsorber; EGR with DPF-only) and associated monitoring system would be in the same emission architecture category.

(B) Vehicle application type. Within an emission architecture category, engines shall be separated into one of three vehicle application types: Engines intended primarily for line-haul chassis applications, engines intended primarily for urban delivery chassis applications, and all other engines.

(iii) The manufacturer may use an alternative grouping method to collect representative data. To do so, the manufacturer must show that the alternative groups include production vehicles using similar emission controls, OBD strategies, monitoring condition calibrations, and vehicle application driving/usage patterns such that they are expected to have similar in-use monitoring performance. The manufacturer will still be required to submit one set of data for each of the alternative groups.

(iv) For each monitoring performance group, the data must include all of the in-use performance tracking data (i.e., all numerators, denominators, the general denominator, and the ignition cycle counter), the date the data were collected, the odometer reading, the VIN, and the calibration ID. For model years 2013 and later, for each monitoring performance group, the data must include all of the in-use performance tracking data reported through SAE J1979 or SAE J1939 (both as specified in paragraph (k)(1) of this section; i.e., all numerators, denominators, the general denominator, and the ignition cycle counter), the date the data were collected, the odometer reading, the VIN, and the calibration ID.

(v) The manufacturer must submit a plan to the Administrator that details the types of production vehicles in each monitoring performance group, the number of vehicles per group to be sampled, the sampling method, the timeline to collect the data, and the reporting format. The plan must provide for effective collection of data from, at least, 15 vehicles per monitoring performance group and provide for data that represent a broad range of temperature conditions. The plan shall not, by design, exclude or include specific vehicles in an attempt to collect data only from vehicles expected to have the highest in-use performance ratios.

(vi) The 12 month deadline for reporting may be extended to 18 months if the manufacturer can show that the delay is justified. In such a case, an interim report of progress to date must be submitted within the 12 month deadline.

(k) *Standardization requirements*—(1) *Reference materials.* The following documents are incorporated by reference, see § 86.1. Anyone may inspect copies at

the U.S. EPA or at the National Archives and Records Administration (NARA). For information on the availability of this material at U.S. EPA, NARA, or the standard making bodies directly, refer to § 86.1.

(i) SAE J1930, Revised April 2002.

(ii) SAE J1939, Revised October 2007.

(iii) SAE J1939–13, Revised March 2004, for model years 2013 and later.

(iv) SAE J1939–73, Revised September 2006.

(v) SAE J1962, Revised April 2002, for model years 2013 and later.

(vi) SAE J1978, Revised April 2002.

(vii) SAE J1979, Revised May 2007.

(viii) SAE J2012, Revised April 2002.

(ix) SAE J2403, Revised August 2007.

(x) ISO 15765–4:2005(E), January 15, 2005.

(2) *Diagnostic connector*. For model years 2010 through 2012, the manufacturer defined data link connector must be accessible to a trained service technician. For model years 2013 and later, a standard data link connector conforming to SAE J1962 (as specified in paragraph (k)(1) of this section) or SAE J1939–13 (as specified in paragraph (k)(1) of this section) specifications (except as provided for in paragraph (k)(2)(iii) if this section) must be included in each vehicle.

(i) For model years 2013 and later, the connector must be located in the driver's side foot-well region of the vehicle interior in the area bound by the driver's side of the vehicle and the driver's side edge of the center console (or the vehicle centerline if the vehicle does not have a center console) and at a location no higher than the bottom of the steering wheel when in the lowest adjustable position. The connector shall not be located on or in the center console (i.e., neither on the horizontal faces near the floor-mounted gear selector, parking brake lever, or cupholders nor on the vertical faces near the car stereo, climate system, or navigation system controls). The location of the connector shall be capable of being easily identified and accessed (e.g., to connect an off-board tool). For vehicles equipped with a driver's side door, the connector must be identified and accessed easily by someone standing (or ''crouched'') on the ground outside the driver's side of the vehicle with the driver's side door open. The Administrator may approve an alternative location upon request from the manufacturer. In all cases, the installation position of the connector must be both identified and accessed easily by someone standing outside the vehicle and protected from accidental damage during normal vehicle use.

(ii) For model years 2013 and later, if the connector is covered, the cover must be removable by hand without the use of any tools and be labeled ''OBD'' to aid technicians in identifying the location of the connector. Access to the diagnostic connector shall not require opening or the removal of any storage accessory (e.g., ashtray, coinbox). The label must clearly identify that the connector is located behind the cover and is consistent with language and/or symbols commonly used in the automobile and/or heavy truck industry.

(iii) For model years 2013 and later, if the ISO 15765–4:2005(E) (as specified in paragraph (k)(1) of this section) communication protocol is used for the required OBD standardized functions, the connector must meet the ''Type A'' specifications of SAE J1962 (as specified in paragraph (k)(1) of this section). Any pins in the connector that provide electrical power must be properly fused to protect the integrity and usefulness of the connector for diagnostic purposes and shall not exceed 20.0 Volts DC regardless of the nominal vehicle system or battery voltage (e.g., 12V, 24V, 42V).

(iv) For model years 2013 and later, if the SAE J1939 (as specified in paragraph (k)(1) of this section) protocol is used for the required OBD standardized functions, the connector must meet the specifications of SAE J1939–13 (as specified in paragraph (k)(1) of this section). Any pins in the connector that provide electrical power must be properly fused to protect the integrity and usefulness of the connector for diagnostic purposes.

(v) For model years 2013 and later, the manufacturer may equip engines/vehicles with additional diagnostic connectors for manufacturer-specific purposes (i.e., purposes other than the required OBD functions). However, if the additional connector conforms to

the ''Type A'' specifications of SAE J1962 (as specified in paragraph (k)(1) of this section) or the specifications of SAE J1939–13 (as specified in paragraph (k)(1) of this section) and is located in the vehicle interior near the required connector as described in this paragraph (k)(2), the connector(s) must be labeled clearly to identify which connector is used to access the standardized OBD information required by paragraph (k) of this section.

(3) *Communications to a scan tool.* For model years 2013 and later, all OBD control modules (e.g., engine, auxiliary emission control module) on a single vehicle must use the same protocol for communication of required emission-related messages from on-board to off-board network communications to a scan tool meeting SAE J1978 (as specified in paragraph (k)(1) of this section) specifications or designed to communicate with an SAE J1939 (as specified in paragraph (k)(1) of this section) network. Engine manufacturers shall not alter normal operation of the engine emission control system due to the presence of off-board test equipment accessing information required by this paragraph (k). The OBD system must use one of the following standardized protocols:

(i) ISO 15765–4:2005(E) (as specified in paragraph (k)(1) of this section). All required emission-related messages using this protocol must use a 500 kbps baud rate.

(ii) SAE J1939 (as specified in paragraph (k)(1) of this section). This protocol may only be used on vehicles with diesel engines.

(4) *Required emission related functions.* The following functions must be implemented and must be accessible by, at a minimum, a manufacturer scan tool. For model years 2013 and later, the following standardized functions must be implemented in accordance with the specifications in SAE J1979 (as specified in paragraph (k)(1) of this section) or SAE J1939 (as specified in paragraph (k)(1) of this section) to allow for access to the required information by a scan tool meeting SAE J1978 (as specified in paragraph (k)(1) of this section) specifications or designed to communicate with an SAE J1939 (as specified in paragraph (k)(1) of this section) network:

(i) *Ready status.* The OBD system must indicate, in accordance with SAE J1979 or SAE J1939–73 (both as specified in paragraph (k)(1) of this section) specifications for model years 2013 and later, ''complete'' or ''not complete'' for each of the installed monitored components and systems identified in paragraphs (g), (h) with the exception of (h)(4), and (i)(3) of this section. All components or systems identified in paragraphs (h)(1), (h)(2), or (i)(3) of this section that are monitored continuously must always indicate ''complete.'' Components or systems that are not subject to being monitored continuously must immediately indicate ''complete'' upon the respective monitor(s) being executed fully and determining that the component or system is not malfunctioning. A component or system must also indicate ''complete'' if, after the requisite number of decisions necessary for determining MIL status has been executed fully, the monitor indicates a malfunction of the component or system. The status for each of the monitored components or systems must indicate ''not complete'' whenever diagnostic memory has been cleared or erased by a means other than that allowed in paragraph (b) of this section. Normal vehicle shut down (i.e., key-off/engine-off) shall not cause the status to indicate ''not complete.''

(A) The manufacturer may request that the ready status for a monitor be set to indicate ''complete'' without the monitor having completed if monitoring is disabled for a multiple number of drive cycles due to the continued presence of extreme operating conditions (e.g., cold ambient temperatures, high altitudes). Any such request must specify the conditions for monitoring system disablement and the number of drive cycles that would pass without monitor completion before ready status would be indicated as ''complete.''

(B) For the evaporative system monitor, the ready status must be set in accordance with this paragraph (k)(4)(i) when both the functional check of the purge valve and, if applicable, the leak detection monitor of the hole size specified in paragraph

(h)(7)(ii)(B) of this section indicate that they are complete.

(C) If the manufacturer elects to indicate ready status through the MIL in the key-on/engine-off position as provided for in paragraph (b)(1)(iii) of this section, the ready status must be indicated in the following manner: If the ready status for all monitored components or systems is ''complete,'' the MIL shall remain continuously activated in the key-on/engine-off position for at least 10–20 seconds. If the ready status for one or more of the monitored components or systems is ''not complete,'' after at least 5 seconds of operation in the key-on/engine-off position with the MIL activated continuously, the MIL shall blink once per second for 5–10 seconds. The data stream value for MIL status as required in paragraph (k)(4)(ii) of this section must indicate ''commanded off'' during this sequence unless the MIL has also been ''commanded on'' for a detected malfunction.

(ii) *Data stream.* For model years 2010 through 2012, the following signals must be made available on demand through the data link connector. For model years 2013 and later, the following signals must be made available on demand through the standardized data link connector in accordance with SAE J1979 or SAE J1939 (both as specified in paragraph (k)(1) of this section) specifications. The actual signal value must always be used instead of a limp home value. Data link signals may report an error state or other predefined status indicator if they are defined for those signals in the SAE J1979 or SAE J1939 (both as specified in paragraph (k)(1) of this section) specifications.

(A) *For gasoline engines.* (*1*) Calculated load value, engine coolant temperature, engine speed, vehicle speed, and time elapsed since engine start.

(*2*) Absolute load, fuel level (if used to enable or disable any other monitors), barometric pressure (directly measured or estimated), engine control module system voltage, and commanded equivalence ratio.

(*3*) Number of stored MIL-on DTCs, catalyst temperature (if directly measured or estimated for purposes of enabling the catalyst monitor(s)), monitor status (i.e., disabled for the rest of this drive cycle, complete this drive cycle, or not complete this drive cycle) since last engine shut-off for each monitor used for ready status, distance traveled (or engine run time for engines not using vehicle speed information) while MIL activated, distance traveled (or engine run time for engines not using vehicle speed information) since DTC memory last erased, and number of warm-up cycles since DTC memory last erased, OBD requirements to which the engine is certified (e.g., California OBD, EPA OBD, European OBD, non-OBD) and MIL status (i.e., commanded-on or commanded-off).

(B) *For diesel engines.* (*1*) Calculated load (engine torque as a percentage of maximum torque available at the current engine speed), driver's demand engine torque (as a percentage of maximum engine torque), actual engine torque (as a percentage of maximum engine torque), reference engine maximum torque, reference maximum engine torque as a function of engine speed (suspect parameter numbers (SPN) 539 through 543 defined by SAE J1939 (as specified in paragraph (k)(1) of this section) within parameter group number (PGN) 65251 for engine configuration), engine coolant temperature, engine oil temperature (if used for emission control or any OBD monitors), engine speed, and time elapsed since engine start.

(*2*) Fuel level (if used to enable or disable any other monitors), vehicle speed (if used for emission control or any OBD monitors), barometric pressure (directly measured or estimated), and engine control module system voltage.

(*3*) Number of stored MIL-on DTCs, monitor status (i.e., disabled for the rest of this drive cycle, complete this drive cycle, or not complete this drive cycle) since last engine shut-off for each monitor used for ready status, distance traveled (or engine run time for engines not using vehicle speed information) while MIL activated, distance traveled (or engine run time for engines not using vehicle speed information) since DTC memory last erased, number of warm-up cycles since DTC memory last erased, OBD requirements to which the engine is certified (e.g., California OBD, EPA OBD, European

OBD, non-OBD), and MIL status (i.e., commanded-on or commanded-off).

(*4*) NO_X NTE control area status (i.e., inside control area, outside control area, inside manufacturer-specific NO_X NTE carve-out area, or deficiency active area) and PM NTE control area status (i.e., inside control area, outside control area, inside manufacturer-specific PM NTE carve-out area, or deficiency active area).

(*5*) For purposes of the calculated load and torque parameters in paragraph (k)(4)(ii)(B)(*1*) of this section, manufacturers must report the most accurate values that are calculated within the applicable electronic control unit (e.g., the engine control module). Most accurate, in this context, must be of sufficient accuracy, resolution, and filtering to be used for the purposes of in-use emission testing with the engine still in a vehicle (e.g., using portable emission measurement equipment).

(C) *For all engines so equipped.* (*1*) Absolute throttle position, relative throttle position, fuel control system status (e.g., open loop, closed loop), fuel trim, fuel pressure, ignition timing advance, fuel injection timing, intake air/manifold temperature, engine intercooler temperature, manifold absolute pressure, air flow rate from mass air flow sensor, secondary air status (upstream, downstream, or atmosphere), ambient air temperature, commanded purge valve duty cycle/position, commanded EGR valve duty cycle/position, actual EGR valve duty cycle/position, EGR error between actual and commanded, PTO status (active or not active), redundant absolute throttle position (for electronic throttle or other systems that utilize two or more sensors), absolute pedal position, redundant absolute pedal position, commanded throttle motor position, fuel rate, boost pressure, commanded/target boost pressure, turbo inlet air temperature, fuel rail pressure, commanded fuel rail pressure, DPF inlet pressure, DPF inlet temperature, DPF outlet pressure, DPF outlet temperature, DPF delta pressure, exhaust pressure sensor output, exhaust gas temperature sensor output, injection control pressure, commanded injection control pressure, turbocharger/turbine speed, variable geometry turbo position, commanded variable geometry turbo position, turbocharger compressor inlet temperature, turbocharger compressor inlet pressure, turbocharger turbine inlet temperature, turbocharger turbine outlet temperature, waste gate valve position, and glow plug lamp status.

(*2*) Oxygen sensor output, air/fuel ratio sensor output, NO_X sensor output, and evaporative system vapor pressure.

(iii) *Freeze frame.* (A) For model years 2010 through 2012, ''Freeze frame'' information required to be stored pursuant to paragraphs (b)(2)(iv), (h)(1)(iv)(D), and (h)(2)(vi) of this section must be made available on demand through the data link connector. For model years 2013 and later, ''Freeze frame'' information required to be stored pursuant to paragraphs (b)(2)(iv), (h)(1)(iv)(D), and (h)(2)(vi) of this section must be made available on demand through the standardized data link connector in accordance with SAE J1979 or SAE J1939–73 (both as specified in paragraph (k)(1) of this section) specifications.

(B) ''Freeze frame'' conditions must include the DTC that caused the data to be stored along with all of the signals required in paragraphs (k)(4)(ii)(A)(*1*) and (k)(4)(ii)(B)(*1*) of this section. Freeze frame conditions must also include all of the signals required on the engine in paragraphs (k)(4)(ii)(A)(*2*) and (k)(4)(ii)(B)(*2*) of this section, and paragraph (k)(4)(ii)(C)(*1*) of this section that are used for diagnostic or control purposes in the specific monitor or emission-critical powertrain control unit that stored the DTC.

(C) Only one frame of data is required to be recorded. For model years 2010 through 2012, the manufacturer may choose to store additional frames provided that at least the required frame can be read by, at a minimum, a manufacturer scan tool. For model years 2013 and later, the manufacturer may choose to store additional frames provided that at least the required frame can be read by a scan tool meeting SAE J1978 (as specified in paragraph (k)(1) of this section) specifications or designed to communicate with an SAE J1939 (as specified in paragraph (k)(1) of this section) network.

(iv) *Diagnostic trouble codes.* (A) For model years 2010 through 2012, For all monitored components and systems, any stored pending, MIL-on, and previous-MIL-on DTCs must be made available through the diagnostic connector. For model years 2013 and later, all monitored components and systems, any stored pending, MIL-on, and previous-MIL-on DTCs must be made available through the diagnostic connector in a standardized format in accordance with SAE J1939 (as specified in paragraph (k)(1) of this section) or ISO 15765–4:2005(E) (as specified in paragraph (k)(1) of this section) specifications; standardized DTCs conforming to the applicable standardized specifications must be employed.

(B) The stored DTC must, to the extent possible, pinpoint the probable cause of the malfunction or potential malfunction. To the extent feasible, the manufacturer must use separate DTCs for every monitor where the monitor and repair procedure or probable cause of the malfunction is different. In general, rationality and functional checks must use different DTCs than the respective circuit integrity checks. Additionally, to the extent possible, input component circuit integrity checks must use different DTCs for distinct malfunctions (e.g., out-of-range low, out-of-range high, open circuit).

(C) The manufacturer must use appropriate standard-defined DTCs whenever possible. With Administrator approval, the manufacturer may use manufacturer-defined DTCs in accordance with the applicable standard's specifications. To do so, the manufacturer must be able to show a lack of available standard-defined DTCs, uniqueness of the monitor or monitored component, expected future usage of the monitor or component, and estimated usefulness in providing additional diagnostic and repair information to service technicians. Manufacturer-defined DTCs must be used in a consistent manner (i.e., the same DTC shall not be used to represent two different failure modes) across a manufacturer's entire product line.

(D) For model years 2010 through 2012, a pending or MIL-on DTC (as required in paragraphs (g) through (i) of this section) must be stored and available to, at a minimum, a manufacturer scan tool within 10 seconds after a monitor has determined that a malfunction or potential malfunction has occurred. A permanent DTC must be stored and available to, at a minimum, a manufacturer scan tool no later than the end of an ignition cycle in which the corresponding MIL-on DTC that caused MIL activation has been stored. For model years 2013 and later, a pending or MIL-on DTC (as required in paragraphs (g) through (i) of this section) must be stored and available to an SAE J1978 (as specified in paragraph (k)(1) of this section) or SAE J1939 (as specified in paragraph (k)(1) of this section) scan tool within 10 seconds after a monitor has determined that a malfunction or potential malfunction has occurred. A permanent DTC must be stored and available to an SAE J1978 (as specified in paragraph (k)(1) of this section) or SAE J1939 (as specified in paragraph (k)(1) of this section) scan tool no later than the end of an ignition cycle in which the corresponding MIL-on DTC that caused MIL activation has been stored.

(E) For model years 2010 through 2012, pending DTCs for all components and systems (including those monitored continuously and non-continuously) must be made available through the diagnostic connector. For model years 2013 and later, pending DTCs for all components and systems (including those monitored continuously and non-continuously) must be made available through the diagnostic connector in accordance with the applicable standard's specifications. For all model years, a manufacturer using alternative statistical protocols for MIL activation as allowed in paragraph (b)(2)(iii) of this section must submit the details of their protocol for setting pending DTCs. The protocol must be, overall, equivalent to the requirements of this paragraph (k)(4)(iv)(E) and provide service technicians with a quick and accurate indication of a potential malfunction.

(F) For model years 2010 through 2012, permanent DTC for all components and systems must be made available through the diagnostic connector

in a format that distinguishes permanent DTCs from pending DTCs, MIL-on DTCs, and previous-MIL-on DTCs. A MIL-on DTC must be stored as a permanent DTC no later than the end of the ignition cycle and subsequently at all times that the MIL-on DTC is commanding the MIL on. For model years 2013 and later, permanent DTC for all components and systems must be made available through the diagnostic connector in a standardized format that distinguishes permanent DTCs from pending DTCs, MIL-on DTCs, and previous-MIL-on DTCs. A MIL-on DTC must be stored as a permanent DTC no later than the end of the ignition cycle and subsequently at all times that the MIL-on DTC is commanding the MIL on. For all model years, permanent DTCs must be stored in non-volatile random access memory (NVRAM) and shall not be erasable by any scan tool command or by disconnecting power to the on-board computer. Permanent DTCs must be erasable if the engine control module is reprogrammed and the ready status described in paragraph (k)(4)(i) of this section for all monitored components and systems are set to ''not complete.'' The OBD system must have the ability to store a minimum of four current MIL-on DTCs as permanent DTCs in NVRAM. If the number of MIL-on DTCs currently commanding activation of the MIL exceeds the maximum number of permanent DTCs that can be stored, the OBD system must store the earliest detected MIL-on DTC as permanent DTC. If additional MIL-on DTCs are stored when the maximum number of permanent DTCs is already stored in NVRAM, the OBD system shall not replace any existing permanent DTC with the additional MIL-on DTCs.

(v) *Test results.* (A) For model years 2010 through 2012 and except as provided for in paragraph (k)(4)(v)(G) of this section, for all monitored components and systems identified in paragraphs (g) and (h) of this section, results of the most recent monitoring of the components and systems and the test limits established for monitoring the respective components and systems must be stored and available through the data link. For model years 2013 and later and except as provided for in paragraph (k)(4)(v)(G) of this section, for all monitored components and systems identified in paragraphs (g) and (h) of this section, results of the most recent monitoring of the components and systems and the test limits established for monitoring the respective components and systems must be stored and available through the data link in accordance with the standardized format specified in SAE J1979 (as specified in paragraph (k)(1) of this section) for engines using the ISO 15765–4:2005(E) (as specified in paragraph (k)(1) of this section) protocol or SAE J1939 (as specified in paragraph (k)(1) of this section).

(B) The test results must be reported such that properly functioning components and systems (e.g., ''passing'' systems) do not store test values outside of the established test limits. Test limits must include both minimum and maximum acceptable values and must be defined so that a test result equal to either test limit is a ''passing'' value, not a ''failing'' value.

(C) For model years 2013 and later, the test results must be standardized such that the name of the monitored component (e.g., catalyst bank 1) can be identified by a generic scan tool and the test results and limits can be scaled and reported by a generic scan tool with the appropriate engineering units.

(D) The test results must be stored until updated by a more recent valid test result or the DTC memory of the OBD system computer is cleared. Upon DTC memory being cleared, test results reported for monitors that have not yet completed with valid test results since the last time the fault memory was cleared must report values of zero for the test result and test limits.

(E) All test results and test limits must always be reported and the test results must be stored until updated by a more recent valid test result or the DTC memory of the OBD system computer is cleared.

(F) The OBD system must store and report unique test results for each separate monitor.

(G) The requirements of this paragraph (k)(4)(v) do not apply to continuous fuel system monitoring, cold start

emission reduction strategy monitoring, and continuous circuit monitoring.

(vi) *Software calibration identification (CAL ID).* On all engines, a single software calibration identification number (CAL ID) for each monitor or emission critical control unit(s) must be made available through, for model years 2010 through 2012, the data link connector or, for model years 2013 and later, the standardized data link connector in accordance with the SAE J1979 or SAE J1939 (both as specified in paragraph (k)(1) of this section) specifications. A unique CAL ID must be used for every emission-related calibration and/or software set having at least one bit of different data from any other emission-related calibration and/or software set. Control units coded with multiple emission or diagnostic calibrations and/or software sets must indicate a unique CAL ID for each variant in a manner that enables an off-board device to determine which variant is being used by the engine. Control units that use a strategy that will result in MIL activation if the incorrect variant is used (e.g., control units that contain variants for manual and automatic transmissions but will activate the MIL if the selected variant does not match the type of transmission mated to the engine) are not required to use unique CAL IDs. Manufacturers may request Administrator approval to respond with more than one CAL ID per diagnostic or emission critical control unit. Administrator approval of the request shall be based on the method used by the manufacturer to ensure each control unit will respond to a scan tool with the CAL IDs in order of highest to lowest priority with regards to areas of the software most critical to emission and OBD system performance.

(vii) *Software calibration verification number (CVN).* (A) All engines must use an algorithm to calculate a single calibration verification number (CVN) that verifies the on-board computer software integrity for each monitor or emission critical control unit that is electronically reprogrammable. The CVN must be made available through, for model years 2010 through 2012, the data link connector or, for model years 2013 and later, the standardized data link connector in accordance with the SAE J1979 or SAE J1939 (both as specified in paragraph (k)(1) of this section) specifications. The CVN must indicate whether the emission-related software and/or calibration data are valid and applicable for the given vehicle and CAL ID. For systems having more than one CAL ID as allowed under paragraph (k)(4)(vi) of this section, one CVN must be made available for each CAL ID and must be output to a scan tool in the same order as the corresponding CAL IDs. For 2010 through 2012, manufacturers may use a default value for the CVN if their emissions critical powertrain control modules are not programmable in the field. For all years, manufacturers may use a default value for the CVN if their emissions critical powertrain control modules are one-time programmable or masked read-only memory. Any default CVN shall be 00000000 for systems designed in accordance with the SAE J1979 (as specified in paragraph (k)(1) of this section) specifications, and FFFFFFFFh for systems designed in accordance with the SAE J1939 (as specified in paragraph (k)(1) of this section) specifications.

(B) The CVN algorithm used to calculate the CVN must be of sufficient complexity that the same CVN is difficult to achieve with modified calibration values.

(C) The CVN must be calculated at least once per ignition cycle and stored until the CVN is subsequently updated. Except for immediately after a reprogramming event or a non-volatile memory clear or for the first 30 seconds of engine operation after a volatile memory clear or battery disconnect, the stored value must be made available through, for model years 2010 through 2012, the data link connector to, at a minimum, a manufacturer scan tool or, for model years 2013 and later, the data link connector to a generic scan tool in accordance with SAE J1979 or SAE J1939 (both as specified in paragraph (k)(1) of this section) specifications. For model years 2010 through 2012, the stored CVN value shall not be erased when DTC memory is erased or during normal vehicle shut down (i.e., key-off/engine-off). For model years 2013 and later, the stored CVN value

shall not be erased when DTC memory is erased by a generic scan tool in accordance with SAE J1979 or SAE J1939 (both as specified in paragraph (k)(1) of this section) specifications or during normal vehicle shut down (i.e., key-off/engine-off).

(D) For model years 2013 and later, the CVN and CAL ID combination information must be available for all engines/vehicles in a standardized electronic format that allows for off-board verification that the CVN is valid and appropriate for a specific vehicle and CAL ID.

(viii) *Vehicle identification number (VIN).* (A) For model years 2010 through 2012, all vehicles must have the vehicle identification number (VIN) available through the data link connector to, at a minimum, a manufacturer scan tool Only one electronic control unit per vehicle may report the VIN to a scan tool. For model years 2013 and later, all vehicles must have the vehicle identification number (VIN) available in a standardized format through the standardized data link connector in accordance with SAE J1979 or SAE J1939 (both as specified in paragraph (k)(1) of this section) specifications. Only one electronic control unit per vehicle may report the VIN to an SAE J1978 or SAE J1939 (both as specified in paragraph (k)(1) of this section) scan tool.

(B) If the VIN is reprogrammable, all emission-related diagnostic information identified in paragraph (k)(4)(ix)(A) of this section must be erased in conjunction with reprogramming of the VIN.

(ix) *Erasure of diagnostic information.* (A) For purposes of this paragraph (k)(4)(ix), ''emission-related diagnostic information'' includes all of the following: ready status as required by paragraph (k)(4)(i) of this section; data stream information as required by paragraph (k)(4)(ii) of this section including the number of stored MIL-on DTCs, distance traveled while MIL activated, number of warm-up cycles since DTC memory last erased, and distance traveled since DTC memory last erased; freeze frame information as required by paragraph (k)(4)(iii) of this section; pending, MIL-on, and previous-MIL-on DTCs as required by paragraph (k)(4)(iv) of this section; and, test results as required by paragraph (k)(4)(v) of this section.

(B) For all engines, the emission-related diagnostic information must be erased if commanded by any scan tool and may be erased if the power to the on-board computer is disconnected. If any of the emission-related diagnostic information is commanded to be erased by any scan tool, all emission-related diagnostic information must be erased from all diagnostic or emission critical control units. The OBD system shall not allow a scan tool to erase a subset of the emission-related diagnostic information (e.g., the OBD system shall not allow a scan tool to erase only one of three stored DTCs or only information from one control unit without erasing information from the other control unit(s)).

(5) *In-use performance ratio tracking requirements.* (i) For each monitor required in paragraphs (g) through (i) of this section to separately report an in-use performance ratio, manufacturers must implement software algorithms to, for model years 2010 through 2012, report a numerator and denominator or, for model years 2013 and later, report a numerator and denominator in the standardized format specified in this paragraph (k)(5) in accordance with the SAE J1979 or SAE J1939 (both as specified in paragraph (k)(1) of this section) specifications.

(ii) For the numerator, denominator, general denominator, and ignition cycle counters required by paragraph (e) of this section, the following numerical value specifications apply:

(A) Each number shall have a minimum value of zero and a maximum value of 65,535 with a resolution of one.

(B) Each number shall be reset to zero only when a non-volatile random access memory (NVRAM) reset occurs (e.g., reprogramming event) or, if the numbers are stored in keep-alive memory (KAM), when KAM is lost due to an interruption in electrical power to the control unit (e.g., battery disconnect). Numbers shall not be reset to zero under any other circumstances including when a scan tool command to clear DTCs or reset KAM is received.

(C) To avoid overflow problems, if either the numerator or denominator for

a specific component reaches the maximum value of 65,535 ±2, both numbers shall be divided by two before either is incremented again.

(D) To avoid overflow problems, if the ignition cycle counter reaches the maximum value of 65,535 ±2, the ignition cycle counter shall rollover and increment to zero on the next ignition cycle.

(E) To avoid overflow problems, if the general denominator reaches the maximum value of 65,535 ±2, the general denominator shall rollover and increment to zero on the next drive cycle that meets the general denominator definition.

(F) If a vehicle is not equipped with a component (e.g., oxygen sensor bank 2, secondary air system), the corresponding numerator and denominator for that specific component shall always be reported as zero.

(iii) For the ratio required by paragraph (e) of this section, the following numerical value specifications apply:

(A) The ratio shall have a minimum value of zero and a maximum value of 7.99527 with a resolution of 0.000122.

(B) The ratio for a specific component shall be considered to be zero whenever the corresponding numerator is equal to zero and the corresponding denominator is not zero.

(C) The ratio for a specific component shall be considered to be the maximum value of 7.99527 if the corresponding denominator is zero or if the actual value of the numerator divided by the denominator exceeds the maximum value of 7.99527.

(6) *Engine run time tracking requirements.* (i) For all gasoline and diesel engines, the manufacturer must implement software algorithms to, for model years 2010 through 2012, track and report individually or, for model years 2013 and later, track and report individually in a standardized format the amount of time the engine has been operated in the following conditions:

(A) Total engine run time.

(B) Total idle run time (with ''idle'' defined as accelerator pedal released by the driver, engine speed less than or equal to 200 rpm above normal warmed-up idle (as determined in the drive position for vehicles equipped with an automatic transmission) or vehicle speed less than or equal to one mile per hour, and power take-off not active).

(C) Total run time with power take off active.

(ii) For each counter specified in paragraph (k)(6)(i) of this section, the following numerical value specifications apply:

(A) Each number shall be a four-byte value with a minimum value of zero, a resolution of one second per bit, and an accuracy of ±ten seconds per drive cycle.

(B) Each number shall be reset to zero only when a non-volatile memory reset occurs (e.g., reprogramming event). Numbers shall not be reset to zero under any other circumstances including when a scan tool (generic or enhanced) command to clear fault codes or reset KAM is received.

(C) To avoid overflow problems, if any of the individual counters reach the maximum value, all counters shall be divided by two before any are incremented again.

(D) For model years 2010 through 2012, the counters shall be made available to, at a minimum, a manufacturer scan tool and may be rescaled when transmitted from a resolution of one second per bit to no more than three minutes per bit. For model years 2013 and later, the counters shall be made available to a generic scan tool in accordance with the SAE J1979 or SAE J1939 (both as specified in paragraph (k)(1) of this section) specifications and may be rescaled when transmitted, if required by the SAE specifications, from a resolution of one second per bit to no more than three minutes per bit.

(7) For 2019 and subsequent model year alternative-fueled engines derived from a diesel-cycle engine, a manufacturer may meet the standardization requirements of paragraph (k) of this section that are applicable to diesel engines rather than the requirements applicable to gasoline engines.

(l) *Monitoring system demonstration requirements for certification*—(1) *General.* (i) The manufacturer must submit emissions test data from one or more durability demonstration test engines (test engines).

(ii) The Administrator may approve other demonstration protocols if the manufacturer can provide comparable

assurance that the malfunction criteria are chosen based on meeting the malfunction criteria requirements and that the timeliness of malfunction detection is within the constraints of the applicable monitoring requirements.

(iii) For flexible fuel engines capable of operating on more than one fuel or fuel combinations, the manufacturer must submit a plan for providing emission test data. The plan must demonstrate that testing will represent properly the expected in-use fuel or fuel combinations.

(2) *Selection of test engines.* (i) Prior to submitting any applications for certification for a model year, the manufacturer must notify the Administrator regarding the planned engine families and engine ratings within each family for that model year. The Administrator will select the engine family(ies) and the specific engine rating within the engine family(ies) that the manufacturer shall use as demonstration test engines. The selection of test vehicles for production evaluation testing as specified in paragraph (j)(2) of this section may take place during this selection process.

(ii) *For model years 2010 through 2012.* The manufacturer must provide emissions test data from the OBD parent rating as defined in paragraph (o)(1) of this section.

(iii) *For model years 2013 and later.* (A) A manufacturer certifying one to five engine families in a given model year must provide emissions test data for a single test engine from one engine rating. A manufacturer certifying six to ten engine families in a given model year must provide emissions test data for a single test engine from two different engine ratings. A manufacturer certifying eleven or more engine families in a given model year must provide emissions test data for a single test engine from three different engine ratings. A manufacturer may forego submittal of test data for one or more of these test engines if data have been submitted previously for all of the engine ratings and/or if all requirements for certification carry-over from one model year to the next are satisfied.

(B) For a given model year, a manufacturer may elect to provide emissions data for test engines from more engine ratings than required by paragraph (l)(2)(iii)(A) of this section. For each additional engine rating tested in that given model year, the number of engine ratings required for testing in one future model year will be reduced by one.

(iv) For the test engine, the manufacturer must use an engine (excluding aftertreatment devices) aged for a minimum of 125 hours fitted with exhaust aftertreatment emission controls aged to be representative of useful life aging. In the event that an accelerated aging procedure is used, the manufacturer is required to submit a description of the accelerated aging process and/or supporting data or use the accelerated aging procedure used for emission certification deterioration factor generation. The process and/or data must demonstrate that deterioration of the exhaust aftertreatment emission controls is stabilized sufficiently such that it represents emission control performance at the end of the useful life.

(3) *Required testing.* Except as otherwise described in this paragraph (l)(3), the manufacturer must perform single malfunction testing based on the applicable test with the components/systems set at their malfunction criteria limits as determined by the manufacturer for meeting the emissions thresholds required in paragraphs (g), (h), and (i) of this section.

(i) *Required testing for diesel-fueled/compression ignition engines*—(A) *Fuel system.* The manufacturer must perform a separate test for each malfunction limit established by the manufacturer for the fuel system parameters (e.g., fuel pressure, injection timing) specified in paragraphs (g)(1)(ii)(A) through (g)(1)(ii)(C) and/or (g)(1)(ii)(D) of this section, if applicable, of this section. When performing a test for a specific parameter, the fuel system must be operating at the malfunction criteria limit for the applicable parameter only. All other parameters must be operating with normal characteristics. In conducting the fuel system demonstration tests, the manufacturer may use computer modifications to cause the fuel system to operate at the malfunction limit if the manufacturer can demonstrate that the computer modifications produce test results

equivalent to an induced hardware malfunction.

(B) *Engine misfire.* For model years 2013 and later, the manufacturer must perform a test at the malfunction limit established by the manufacturer for the monitoring required by paragraph (g)(2)(ii)(B) of this section.

(C) *EGR system.* The manufacturer must perform a separate test for each malfunction limit established by the manufacturer for the EGR system parameters (e.g., low flow, high flow, slow response) specified in paragraphs (g)(3)(ii)(A) through (g)(3)(ii)(C) and in (g)(3)(ii)(E) of this section. In conducting the EGR system slow response demonstration tests, the manufacturer may use computer modifications to cause the EGR system to operate at the malfunction limit if the manufacturer can demonstrate that the computer modifications produce test results equivalent to an induced hardware malfunction.

(D) *Turbo boost control system.* The manufacturer must perform a separate test for each malfunction limit established by the manufacturer for the turbo boost control system parameters (e.g., underboost, overboost, response) specified in paragraphs (g)(4)(ii)(A) through (g)(4)(ii)(C) and in (g)(4)(ii)(E) of this section.

(E) *NMHC catalyst.* The manufacturer must perform a separate test for each monitored NMHC catalyst(s). The catalyst(s) being evaluated must be deteriorated to the applicable malfunction limit established by the manufacturer for the monitoring required by paragraph (g)(5)(ii)(A) of this section and using methods established by the manufacturer in accordance with paragraph (l)(7) of this section. For each monitored NMHC catalyst(s), the manufacturer must also demonstrate that the OBD system will detect a catalyst malfunction with the catalyst at its maximum level of deterioration (i.e., the substrate(s) completely removed from the catalyst container or ''empty'' can). Emissions data are not required for the empty can demonstration.

(F) *NO_X catalyst.* The manufacturer must perform a separate test for each monitored NO_X catalyst(s) (e.g., SCR catalyst). The catalyst(s) being evaluated must be deteriorated to the applicable malfunction criteria established by the manufacturer for the monitoring required by paragraphs (g)(6)(ii)(A) and (g)(6)(ii)(B) of this section and using methods established by the manufacturer in accordance with paragraph (l)(7) of this section. For each monitored NO_X catalyst(s), the manufacturer must also demonstrate that the OBD system will detect a catalyst malfunction with the catalyst at its maximum level of deterioration (i.e., the substrate(s) completely removed from the catalyst container or ''empty'' can). Emissions data are not required for the empty can demonstration.

(G) *NO_X adsorber.* The manufacturer must perform a test using a NO_X adsorber(s) deteriorated to the applicable malfunction limit established by the manufacturer for the monitoring required by paragraph (g)(7)(ii)(A) of this section. The manufacturer must also demonstrate that the OBD system will detect a NO_X adsorber malfunction with the NO_X adsorber at its maximum level of deterioration (i.e., the substrate(s) completely removed from the container or ''empty'' can). Emissions data are not required for the empty can demonstration.

(H) *Diesel particulate filter.* The manufacturer must perform a separate test using a DPF deteriorated to the applicable malfunction limits established by the manufacturer for the monitoring required by paragraph (g)(8)(ii)(A) and (g)(8)(ii)(B) of this section. For systems using the optional DPF monitoring provision of paragraph (g)(8)(ii)(A) of this section, the manufacturer must perform a separate test using a DPF modified in a manner approved by the Administrator (e.g., drilling of wallflow channel end plugs, drilling of through holes, etc.) and testing at each of the nine test points specified in paragraph (g)(8)(ii)(A) of this section. The manufacturer must also demonstrate that the OBD system will detect a DPF malfunction with the DPF at its maximum level of deterioration (i.e., the filter(s) completely removed from the filter container or ''empty'' can). Emissions data are not required for the empty can demonstration.

(I) *Exhaust gas sensor.* The manufacturer must perform a separate test for

each malfunction limit established by the manufacturer for the monitoring required in paragraphs (g)(9)(ii)(A), (g)(9)(iii)(A), and (g)(9)(iv)(A) of this section. When performing a test, all exhaust gas sensors used for the same purpose (e.g., for the same feedback control loop, for the same control feature on parallel exhaust banks) must be operating at the malfunction criteria limit for the applicable parameter only. All other exhaust gas sensor parameters must be operating with normal characteristics.

(J) *VVT system.* The manufacturer must perform a separate test for each malfunction limit established by the manufacturer for the monitoring required in paragraphs (g)(10)(ii)(A) and (g)(10)(ii)(B) of this section. In conducting the VVT system demonstration tests, the manufacturer may use computer modifications to cause the VVT system to operate at the malfunction limit if the manufacturer can demonstrate that the computer modifications produce test results equivalent to an induced hardware malfunction.

(K) For each of the testing requirements of this paragraph (l)(3)(i) of this section, if the manufacturer has established that only a functional check is required because no failure or deterioration of the specific tested system could result in an engine's emissions exceeding the applicable emissions thresholds, the manufacturer is not required to perform a demonstration test; however, the manufacturer is required to provide the data and/or engineering analysis used to determine that only a functional test of the system(s) is required.

(ii) *Required testing for gasoline-fueled/spark-ignition engines*—(A) *Fuel system.* For engines with adaptive feedback based on the primary fuel control sensor(s), the manufacturer must perform a test with the adaptive feedback based on the primary fuel control sensor(s) at the rich limit(s) and a test at the lean limit(s) established by the manufacturer as required by paragraph (h)(1)(ii)(A) of this section to detect a malfunction before emissions exceed applicable emissions thresholds. For engines with feedback based on a secondary fuel control sensor(s) and subject to the malfunction criteria in paragraph (h)(1)(ii)(A) of this section, the manufacturer must perform a test with the feedback based on the secondary fuel control sensor(s) at the rich limit(s) and a test at the lean limit(s) established by the manufacturer as required by paragraph (h)(1)(ii)(A) of this section to detect a malfunction before emissions exceed the applicable emissions thresholds. For other fuel metering or control systems, the manufacturer must perform a test at the criteria limit(s). For purposes of fuel system testing as required by this paragraph (l)(3)(ii)(A), the malfunction(s) induced may result in a uniform distribution of fuel and air among the cylinders. Non uniform distribution of fuel and air used to induce a malfunction shall not cause misfire. In conducting the fuel system demonstration tests, the manufacturer may use computer modifications to cause the fuel system to operate at the malfunction limit. To do so, the manufacturer must be able to demonstrate that the computer modifications produce test results equivalent to an induced hardware malfunction.

(B) *Misfire.* The manufacturer must perform a test at the malfunction criteria limit specified in paragraph (h)(2)(ii)(B) of this section.

(C) *EGR system.* The manufacturer must perform a test at each flow limit calibrated to the malfunction criteria specified in paragraphs (h)(3)(ii)(A) and (h)(3)(ii)(B) of this section.

(D) *Cold start emission reduction strategy.* The manufacturer must perform a test at the malfunction criteria for each component monitored according to paragraph (h)(4)(ii)(A) of this section.

(E) *Secondary air system.* The manufacturer must perform a test at each flow limit calibrated to the malfunction criteria specified in paragraphs (h)(5)(ii)(A) and (h)(5)(ii)(B) of this section.

(F) *Catalyst.* The manufacturer must perform a test using a catalyst system deteriorated to the malfunction criteria specified in paragraph (h)(6)(ii) of this section using methods established by the manufacturer in accordance with paragraph (l)(7)(ii) of this section.

The manufacturer must also demonstrate that the OBD system will detect a catalyst system malfunction with the catalyst system at its maximum level of deterioration (i.e., the substrate(s) completely removed from the catalyst container or ''empty'' can). Emission data are not required for the empty can demonstration.

(G) *Exhaust gas sensor*. The manufacturer must perform a test with all primary exhaust gas sensors used for fuel control simultaneously possessing a response rate deteriorated to the malfunction criteria limit specified in paragraph (h)(8)(ii)(A) of this section. The manufacturer must also perform a test for any other primary or secondary exhaust gas sensor parameter under parargraphs (h)(8)(ii)(A) and (h)(8)(iii)(A) of this section that can cause engine emissions to exceed the applicable emissions thresholds (e.g., shift in air/fuel ratio at which oxygen sensor switches, decreased amplitude). When performing additional test(s), all primary and secondary (if applicable) exhaust gas sensors used for emission control must be operating at the malfunction criteria limit for the applicable parameter only. All other primary and secondary exhaust gas sensor parameters must be operating with normal characteristics.

(H) *VVT system*. The manufacturer must perform a test at each target error limit and slow response limit calibrated to the malfunction criteria specified in paragraphs (h)(9)(ii)(A) and (h)(9)(ii)(B) of this section. In conducting the VVT system demonstration tests, the manufacturer may use computer modifications to cause the VVT system to operate at the malfunction limit. To do so, the manufacturer must be able to demonstrate that the computer modifications produce test results equivalent to an induced hardware malfunction.

(I) For each of the testing requirements of this paragraph (l)(3)(ii), if the manufacturer has established that only a functional check is required because no failure or deterioration of the specific tested system could cause an engine's emissions to exceed the applicable emissions thresholds, the manufacturer is not required to perform a demonstration test; however the manufacturer is required to provide the data and/or engineering analyses used to determine that only a functional test of the system(s) is required.

(iii) *Required testing for all engines*. (A) Other emission control systems. The manufacturer must conduct demonstration tests for all other emission control components (e.g., hydrocarbon traps, adsorbers) designed and calibrated to a malfunction limit based on an emissions threshold based on the requirements of paragraph (i)(4) of this section.

(B) For each of the testing requirements of paragraph (l)(3)(iii)(A) of this section, if the manufacturer has established that only a functional check is required because no failure or deterioration of the specific tested system could result in an engine's emissions exceeding the applicable emissions thresholds, the manufacturer is not required to perform a demonstration test; however, the manufacturer is required to provide the data and/or engineering analysis used to determine that only a functional test of the system(s) is required.

(iv) The manufacturer may electronically simulate deteriorated components but shall not make any engine control unit modifications when performing demonstration tests unless approved by the Administrator. All equipment necessary to duplicate the demonstration test must be made available to the Administrator upon request.

(4) *Testing protocol*—(i) *Preconditioning*. The manufacturer must use an applicable cycle for preconditioning test engines prior to conducting each of the emission tests required by paragraph (l)(3) of this section. The manufacturer may perform a single additional preconditioning cycle, identical to the initial one, after a 20-minute hot soak but must demonstrate that such an additional cycle is necessary to stabilize the emissions control system. A practice of requiring a cold soak prior to conducting preconditioning cycles is not permitted.

(ii) *Test sequence*. (A) The manufacturer must set individually each system or component on the test engine at the malfunction criteria limit prior to

conducting the applicable preconditioning cycle(s). If a second preconditioning cycle is permitted in accordance with paragraph (l)(4)(i) of this section, the manufacturer may adjust the system or component to be tested before conducting the second preconditioning cycle. The manufacturer shall not replace, modify, or adjust the system or component after the last preconditioning cycle has been completed.

(B) After preconditioning, the test engine must be operated over the applicable cycle to allow for the initial detection of the tested system or component malfunction. This test cycle may be omitted from the testing protocol if it is unnecessary. If required by the monitoring strategy being tested, a cold soak may be performed prior to conducting this test cycle.

(C) The test engine must then be operated over the applicable exhaust emissions test.

(iii) A manufacturer required to test more than one test engine according to paragraph (l)(2)(iii) of this section may use internal calibration sign-off test procedures (e.g., forced cool downs, less frequently calibrated emission analyzers) instead of official test procedures to obtain the emission test data required by this paragraph (l) of this section for all but one of the required test engines. The manufacturer may elect this option if the data from the alternative test procedure are representative of official emissions test results. A manufacturer using this option is still responsible for meeting the malfunction criteria specified in paragraphs (g) through (i) of this section if and when emissions tests are performed in accordance with official test procedures.

(iv) The manufacturer may request approval to use an alternative testing protocol for demonstration of MIL activation if the engine dynamometer emission test cycle does not allow all of a given monitor's enable conditions to be satisfied. The manufacturer may request the use of an alternative engine dynamometer test cycle or the use of chassis testing to demonstrate proper MIL activation. To do so, the manufacturer must demonstrate the technical necessity for using an alternative test cycle and the degree to which the alternative test cycle demonstrates that in-use operation with the malfunctioning component will result in proper MIL activation.

(5) *Evaluation protocol.* Full OBD engine ratings, as defined by paragraph (o)(1) of this section, shall be evaluated according to the following protocol:

(i) For all tests conducted as required by paragraph (l) of this section, the MIL must activate before the end of the first engine start portion of the applicable test.

(ii) If the MIL activates prior to emissions exceeding the applicable malfunction criteria limits specified in paragraphs (g) through (i), no further demonstration is required. With respect to the misfire monitor demonstration test, if the manufacturer has elected to use the minimum misfire malfunction criteria of one percent as allowed in paragraphs (g)(2)(ii)(B), if applicable, and (h)(2)(ii)(B) of this section, no further demonstration is required provided the MIL activates with engine misfire occurring at the malfunction criteria limit.

(iii) If the MIL does not activate when the system or component is set at its malfunction criteria limit(s), the criteria limit(s) or the OBD system is not acceptable.

(A) Except for testing of the catalyst or DPF system, if the MIL first activates after emissions exceed the applicable malfunction criteria specified in paragraphs (g) through (i) of this section, the test engine shall be retested with the tested system or component adjusted so that the MIL will activate before emissions exceed the applicable malfunction criteria specified in paragraphs (g) through (i) of this section. If the component cannot be so adjusted because an alternative fuel or emission control strategy is used when a malfunction is detected (e.g., open loop fuel control used after an oxygen sensor malfunction is detected), the test engine shall be retested with the component adjusted to the worst acceptable limit (i.e., the applicable OBD monitor indicates that the component is performing at or slightly better than the malfunction criteria limit). When tested with the component so adjusted, the MIL must not activate during the test and the engine emissions must be

below the applicable malfunction criteria specified in paragraphs (g) through (i) of this section.

(B) In testing the catalyst or DPF system, if the MIL first activates after emissions exceed the applicable emissions threshold(s) specified in paragraphs (g) and (h), the tested engine shall be retested with a less deteriorated catalyst or DPF system (i.e., more of the applicable engine out pollutants are converted or trapped). For the OBD system to be approved, testing shall be continued until the MIL activates with emissions below the applicable thresholds of paragraphs (g) and (h) of this section, or the MIL activates with emissions within a range no more than 20 percent below the applicable emissions thresholds and 10 percent or less above those emissions thresholds.

(iv) If an OBD system is determined to be unacceptable by the criteria of this paragraph (l)(5) of this section, the manufacturer may recalibrate and retest the system on the same test engine. In such a case, the manufacturer must confirm, by retesting, that all systems and components that were tested prior to the recalibration and are affected by it still function properly with the recalibrated OBD system.

(6) *Confirmatory testing.* (i) The Administrator may perform confirmatory testing to verify the emission test data submitted by the manufacturer as required by this paragraph (l) of this section comply with its requirements and the malfunction criteria set forth in paragraphs (g) through (i) of this section. Such confirmatory testing is limited to the test engine(s) required by paragraph (l)(2) of this section.

(ii) To conduct this confirmatory testing, the Administrator may install appropriately deteriorated or malfunctioning components (or simulate them) in an otherwise properly functioning test engine of an engine rating represented by the demonstration test engine in order to test any of the components or systems required to be tested by paragraph (l) of this section. The manufacturer shall make available, if requested, an engine and all test equipment (e.g., malfunction simulators, deteriorated components) necessary to duplicate the manufacturer's testing. Such a request from the Administrator shall occur within six months of reviewing and approving the demonstration test engine data submitted by the manufacturer for the specific engine rating.

(7) *Catalyst aging*—(i) *Diesel catalysts.* For purposes of determining the catalyst malfunction limits for the monitoring required by paragraphs (g)(5)(ii)(A), (g)(5)(ii)(B), and (g)(6)(ii)(A) of this section, where those catalysts are monitored individually, the manufacturer must use a catalyst deteriorated to the malfunction criteria using methods established by the manufacturer to represent real world catalyst deterioration under normal and malfunctioning engine operating conditions. For purposes of determining the catalyst malfunction limits for the monitoring required by paragraphs (g)(5)(ii)(A), (g)(5)(ii)(B), and (g)(6)(ii)(A) of this section, where those catalysts are monitored in combination with other catalysts, the manufacturer must submit their catalyst system aging and monitoring plan to the Administrator as part of their certification documentation package. The plan must include the description, emission control purpose, and location of each component, the monitoring strategy for each component and/or combination of components, and the method for determining the applicable malfunction criteria including the deterioration/aging process.

(ii) *Gasoline catalysts.* For the purposes of determining the catalyst system malfunction criteria in paragraph (h)(6)(ii) of this section, the manufacturer must use a catalyst system deteriorated to the malfunction criteria using methods established by the manufacturer to represent real world catalyst deterioration under normal and malfunctioning operating conditions. The malfunction criteria must be established by using a catalyst system with all monitored and unmonitored (downstream of the sensor utilized for catalyst monitoring) catalysts simultaneously deteriorated to the malfunction criteria except for those engines that use fuel shutoff to prevent overfueling during engine misfire conditions. For such engines, the malfunction criteria must be established by

using a catalyst system with all monitored catalysts simultaneously deteriorated to the malfunction criteria while unmonitored catalysts shall be deteriorated to the end of the engine's useful life.

(m) *Certification documentation requirements.* (1) When submitting an application for certification of an engine, the manufacturer must submit the following documentation. If any of the items listed here are standardized for all of the manufacturer's engines, the manufacturer may, for each model year, submit one set of documents covering the standardized items for all of its engines.

(i) For the required documentation that is not standardized across all engines, the manufacturer may be allowed to submit documentation for certification from one engine that is representative of other engines. All such engines shall be considered to be part of an OBD certification documentation group. To represent the OBD group, the chosen engine must be certified to the most stringent emissions standards and OBD monitoring requirements and cover all of the emissions control devices for the engines in the group and covered by the submitted documentation. Such OBD groups must be approved in advance of certification.

(ii) Upon approval, one or more of the documentation requirements of this paragraph (m) of this section may be waived or modified if the information required is redundant or unnecessarily burdensome to generate.

(iii) To the extent possible, the certification documentation must use SAE J1930 (as specified in paragraph (k)(1) of this section) or SAE J2403 (as specified in paragraph (k)(1) of this section) terms, abbreviations, and acronyms as specified in paragraph (k)(1) of this section.

(2) Unless otherwise specified, the following information must be submitted as part of the certification application and prior to receiving a certificate.

(i) A description of the functional operation of the OBD system including a complete written description for each monitoring strategy that outlines every step in the decision-making process of the monitor. Algorithms, diagrams, samples of data, and/or other graphical representations of the monitoring strategy shall be included where necessary to adequately describe the information.

(ii) A table including the following information for each monitored component or system (either computer-sensed or computer-controlled) of the emissions control system:

(A) Corresponding diagnostic trouble code.

(B) Monitoring method or procedure for malfunction detection.

(C) Primary malfunction detection parameter and its type of output signal.

(D) Malfunction criteria limits used to evaluate output signal of primary parameter.

(E) Other monitored secondary parameters and conditions (in engineering units) necessary for malfunction detection.

(F) Monitoring time length and frequency of monitoring events.

(G) Criteria for storing a diagnostic trouble code.

(H) Criteria for activating a malfunction indicator light.

(I) Criteria used for determining out-of-range values and input component rationality checks.

(iii) Whenever possible, the table required by paragraph (m)(2)(ii) of this section shall use the following engineering units:

(A) Degrees Celsius for all temperature criteria.

(B) KiloPascals (KPa) for all pressure criteria related to manifold or atmospheric pressure.

(C) Grams (g) for all intake air mass criteria.

(D) Pascals (Pa) for all pressure criteria related to evaporative system vapor pressure.

(E) Miles per hour (mph) for all vehicle speed criteria.

(F) Relative percent (%) for all relative throttle position criteria (as defined in SAE J1979 or SAE J1939 (both as specified in paragraph (k)(1) of this section)).

(G) Voltage (V) for all absolute throttle position criteria (as defined in SAE J1979 or SAE J1939 (both as specified in paragraph (k)(1) of this section)).

(H) Per crankshaft revolution (/rev) for all changes per ignition event based criteria (e.g., g/rev instead of g/stroke or g/firing).

(I) Per second (/sec) for all changes per time based criteria (e.g., g/sec).

(J) Percent of nominal tank volume (%) for all fuel tank level criteria.

(iv) A logic flowchart describing the step-by-step evaluation of the enable criteria and malfunction criteria for each monitored emission related component or system.

(v) Emissions test data, a description of the testing sequence (e.g., the number and types of preconditioning cycles), approximate time (in seconds) of MIL activation during the test, diagnostic trouble code(s) and freeze frame information stored at the time of detection, corresponding test results (e.g. SAE J1979 (as specified in paragraph (k)(1) of this section) Mode/Service $06, SAE J1939 (as specified in paragraph (k)(1) of this section) Diagnostic Message 8 (DM8)) stored during the test, and a description of the modified or deteriorated components used for malfunction simulation with respect to the demonstration tests specified in paragraph (l) of this section. The freeze frame data are not required for engines termed ''Extrapolated OBD'' engines.

(vi) For gasoline engines, data supporting the misfire monitor, including:

(A) The established percentage of misfire that can be tolerated without damaging the catalyst over the full range of engine speed and load conditions.

(B) Data demonstrating the probability of detection of misfire events by the misfire monitoring system over the full engine speed and load operating range for the following misfire patterns: random cylinders misfiring at the malfunction criteria established in paragraph (h)(2)(ii)(B) of this section, one cylinder continuously misfiring, and paired cylinders continuously misfiring.

(C) Data identifying all disablement of misfire monitoring that occurs during the FTP. For every disablement that occurs during the cycles, the data shall identify: when the disablement occurred relative to the driver's trace, the number of engine revolutions during which each disablement was present, and which disable condition documented in the certification application caused the disablement.

(D) Manufacturers are not required to use the durability demonstration engine to collect the misfire data required by paragraph (m)(2)(vi) of this section.

(vii) Data supporting the limit for the time between engine starting and attaining the designated heating temperature for after-start heated catalyst systems.

(viii) Data supporting the criteria used to detect a malfunction of the fuel system, EGR system, boost pressure control system, catalyst, NO_X adsorber, DPF, cold start emission reduction strategy, secondary air, evaporative system, VVT system, exhaust gas sensors, and other emission controls that causes emissions to exceed the applicable malfunction criteria specified in paragraphs (g) through (i) of this section. For diesel engine monitors required by paragraphs (g) and (i) of this section that are required to indicate a malfunction before emissions exceed an emission threshold based on any applicable standard (e.g., 2.5 times any of the applicable standards), the test cycle and standard determined by the manufacturer to be the most stringent for each applicable monitor in accordance with paragraph (f)(1) of this section.

(ix) A list of all electronic powertrain input and output signals (including those not monitored by the OBD system) that identifies which signals are monitored by the OBD system. For input and output signals that are monitored as comprehensive components, the listing shall also identify the specific diagnostic trouble code for each malfunction criteria (e.g., out-of-range low, out-of-range high, open circuit, rationality low, rationality high).

(x) A written description of all parameters and conditions necessary to begin closed-loop/feedback control of emission control systems (e.g., fuel system, boost pressure, EGR flow, SCR reductant delivery, DPF regeneration, fuel system pressure).

(xi) A written identification of the communication protocol utilized by each engine for communication with a scan tool (model years 2010 through

2012) or an SAE J1978 or SAE J1939 (both as specified in paragraph (k)(1) of this section) scan tool (model years 2013 and later).

(xii) For model years 2013 and later, a pictorial representation or written description of the diagnostic connector location including any covers or labels.

(xiii) A written description of the method used by the manufacturer to meet the requirements of paragraph (i)(2) of this section (crankcase ventilation system monitoring) including diagrams or pictures of valve and/or hose connections.

(xiv) Build specifications provided to engine purchasers or chassis manufacturers detailing all specifications or limitations imposed on the engine purchaser relevant to OBD requirements or emissions compliance (e.g., cooling system heat rejection rates, allowable MIL locations, connector location specifications). A description of the method or copies of agreements used to ensure engine purchasers or chassis manufacturers will comply with the OBD and emissions relevant build specifications (e.g., signed agreements, required audit/evaluation procedures).

(xv) Any other information determined by the Administrator to be necessary to demonstrate compliance with the requirements of this section.

(3) In addition to the documentation required by paragraphs (m)(1) and (m)(2) of this section, a manufacturer making use of paragraph (a)(5) of this section must submit the following information with their application for certification.

(i) A detailed description of how the OBD system meets the intent of § 86.010–18.

(ii) A detailed description of why the manufacturer has chosen not to design the OBD system to meet the requirements of § 86.010–18 and has instead designed the OBD system to meet the applicable California OBD requirements.

(iii) A detailed description of any deficiencies granted by the California staff and any concerns raised by California staff. A copy of a California Executive Order alone will not be considered acceptable toward meeting this requirement. This description shall also include, to the extent feasible, a plan with timelines for resolving deficiencies and/or concerns.

(n) *Deficiencies.* (1) Upon application by the manufacturer, the Administrator may accept an OBD system as compliant even though specific requirements are not fully met. Such compliances without meeting specific requirements, or deficiencies, will be granted only if compliance is infeasible or unreasonable considering such factors as, but not limited to: Technical feasibility of the given monitor and lead time and production cycles including phase-in or phase-out of engines or vehicle designs and programmed upgrades of computers. Unmet requirements shall not be carried over from the previous model year except where unreasonable hardware or software modifications are necessary to correct the deficiency, and the manufacturer has demonstrated an acceptable level of effort toward compliance as determined by the Administrator. Furthermore, EPA will not accept any deficiency requests that include the complete lack of a major diagnostic monitor (''major'' diagnostic monitors being those for exhaust aftertreatment devices, oxygen sensor, air-fuel ratio sensor, NO_X sensor, engine misfire, evaporative leaks, and diesel EGR, if equipped), with the possible exception of the special provisions for alternative fueled engines. For alternative fueled heavy-duty engines (e.g., natural gas, liquefied petroleum gas, methanol, ethanol), manufacturers may request the Administrator to waive specific monitoring requirements of this section for which monitoring may not be reliable with respect to the use of the alternative fuel. At a minimum, alternative fuel engines must be equipped with an OBD system meeting OBD requirements to the extent feasible as approved by the Administrator.

(2) In the event the manufacturer seeks to carry-over a deficiency from a past model year to the current model year, the manufacturer must re-apply for approval to do so. In considering the request to carry-over a deficiency, the Administrator shall consider the manufacturer's progress towards correcting the deficiency. The Administrator may not allow manufacturers to

carry over monitoring system deficiencies for more than two model years unless it can be demonstrated that substantial engine hardware modifications and additional lead time beyond two years are necessary to correct the deficiency.

(3) A deficiency shall not be granted retroactively (i.e., after the engine has been certified).

(o) *Implementation schedule*. Except as specifically provided for in this paragraph (o) for small volume manufacturers and alternative fueled engines, the requirements of this section must be met according to the following provisions:

(1) *For model years 2010 through 2012*—(i) *Full OBD*. The manufacturer must implement an OBD system meeting the applicable requirements of § 86.010–18 on one engine rating within one engine family of the manufacturer's product line. This ''Full OBD'' rating will be known as the ''OBD parent'' rating. The OBD parent rating must be chosen, unless otherwise approved by the Administrator, as the rating having the highest weighted projected U.S. sales within the engine family having the highest weighted projected U.S. sales, with U.S. sales being weighted by the useful life of the engine rating.

(ii) *Extrapolated OBD*. For all other engine ratings within the engine family from which the OBD parent rating has been selected, the manufacturer must implement an OBD system meeting the applicable requirements of § 86.010–18 except that the OBD system is not required to detect a malfunction prior to exceeding the emission thresholds shown in Table 1 of paragraph (g) and Table 2 of paragraph (h) of this section. These ''Extrapolated OBD'' engines will be know as the ''OBD child'' ratings. On these OBD child ratings, rather than detecting a malfunction prior to exceeding the emission thresholds, the manufacturer must submit a plan for Administrator review and approval that details the engineering evaluation the manufacturer will use to establish the malfunction criteria for the OBD child ratings. The plan must demonstrate both the use of good engineering judgment in establishing the malfunction criteria, and robust detection of malfunctions, including consideration of differences of base engine, calibration, emission control components, and emission control strategies.

(iii) Engine families other than those from which the parent and child ratings have been selected, are not subject to the requirements of this section.

(iv) Small volume manufacturers, as defined in § 86.094–14(b)(1) and (2) and as determined using 2010 model year sales, are exempt from the requirements of this § 86.010–18, unless model year 2011 or model year 2012 sales exceed 20,000 units.

(v) Engines certified as alternative fueled engines are exempt from the requirements of this § 86.010–18.

(2) *For model years 2013 through 2015*—(i) *OBD groups*. The manufacturer shall define one or more OBD groups to cover all engine ratings in all engine families. The manufacturer must submit a grouping plan for Administrator review and approval detailing the OBD groups and the engine families and engine ratings within each group for a given model year.

(ii) *Full OBD*. (A) For all model year 2010 through 2012 ''Full OBD'' and ''Extrapolated OBD'' engine ratings, the manufacturer must implement an OBD system meeting the applicable requirements of this section.

(B) On one engine rating within each of the manufacturer's OBD groups, the manufacturer must implement an OBD system meeting the applicable requirements of this section. These ''Full OBD'' ratings will be known as the ''OBD parent'' ratings. The OBD parent rating for each OBD group shall be chosen, unless otherwise approved by the Administrator, as the rating having the highest weighted projected U.S. sales within the OBD group, with U.S. sales being weighted by the useful life of the engine rating.

(iii) *Extrapolated OBD*. For all other engine ratings within each OBD group, the manufacturer must implement an OBD system meeting the requirements of this section except that the OBD system is not required to detect a malfunction prior to exceeding the emission thresholds shown in Table 1 of paragraph (g) and Table 2 of paragraph (h) of this section. These extrapolated OBD engines will be know as the ''OBD

child'' ratings. On these OBD child ratings, rather than detecting a malfunction prior to exceeding the emission thresholds, the manufacturer must submit a plan for Administrator review and approval that details the engineering evaluation the manufacturer will use to establish the malfunction criteria for the OBD child ratings. The plan must demonstrate both the use of good engineering judgment in establishing the malfunction criteria, and robust detection of malfunctions, including consideration of differences of base engine, calibration, emission control components, and emission control strategies.

(iv) Engines certified as alternative fueled engines shall meet, to the extent feasible, the requirements specified in paragraph (i)(3) of this § 86.010–18. Additionally, such engines shall monitor the NO_X aftertreatment system on engines so equipped and detect a malfunction if:

(A) The NO_X aftertreatment system has no detectable amount of NO_X aftertreatement capability (i.e., NO_X catalyst conversion or NO_X adsorption).

(B) The NO_X aftertreatment substrate is completely destroyed, removed, or missing.

(C) The NO_X aftertreatment assembly is replaced with a straight pipe.

(3) *For model years 2016 through 2018*—(i) *OBD groups*. The manufacturer shall define one or more OBD groups to cover all engine ratings in all engine families. The manufacturer must submit a grouping plan for Administrator review and approval detailing the OBD groups and the engine families and engine ratings within each group for a given model year.

(ii) *Full OBD*. The manufacturer must implement an OBD system meeting the applicable requirements of this section on all engine ratings in all engine families.

(iii) Engines certified as alternative fueled engines shall meet, to the extent feasible, the requirements specified in paragraph (i)(3) of this § 86.010–18. Additionally, such engines shall monitor the NO_X aftertreatment system on engines so equipped and detect a malfunction if:

(A) The NO_X aftertreatment system has no detectable amount of NO_X aftertreatement capability (i.e., NO_X catalyst conversion or NO_X adsorption).

(B) The NO_X aftertreatment substrate is completely destroyed, removed, or missing.

(C) The NO_X aftertreatment assembly is replaced with a straight pipe.

(4) *For model years 2019 and later*. (i) The manufacturer must implement an OBD system meeting the applicable requirements of § 86.010–18 on all engines.

(p) *In-use compliance standards*. For monitors required to indicate a malfunction before emissions exceed a certain emission threshold (e.g., 2.5 times any of the applicable standards):

(1) *For model years 2010 through 2012*. (i) On the full OBD rating (i.e., the parent rating) as defined in paragraph (o)(1) of this section, separate in-use emissions thresholds shall apply. These thresholds are determined by doubling the applicable thresholds as shown in Table 1 of paragraph (g) and Table 2 of paragraph (h) of this section. The resultant thresholds apply only in-use and do not apply for certification or selective enforcement auditing.

(ii) The extrapolated OBD ratings (i.e., the child ratings) as defined in paragraph (o)(1) of this section shall not be evaluated against emissions levels for purposes of OBD compliance in-use.

(iii) Only the test cycle and standard determined and identified by the manufacturer at the time of certification in accordance with paragraph (f) of this section as the most stringent shall be used for the purpose of determining OBD system noncompliance in-use.

(iv) An OBD system shall not be considered noncompliant solely due to a failure or deterioration mode of a monitored component or system that could not have been reasonably foreseen to occur by the manufacturer.

(2) *For model years 2013 through 2015*. (i) On the full OBD ratings as defined in paragraph (o)(2) of this section, separate in-use emissions thresholds shall apply. These thresholds are determined by doubling the applicable thresholds as shown in Table 1 of paragraph (g) and Table 2 of paragraph (h) of this section. The resultant thresholds apply

only in-use and do not apply for certification or selective enforcement auditing.

(ii) The extrapolated OBD ratings as defined in paragraph (o)(2) of this section shall not be evaluated against emissions levels for purposes of OBD compliance in-use.

(iii) Only the test cycle and standard determined and identified by the manufacturer at the time of certification in accordance with paragraph (f) of this section as the most stringent shall be used for the purpose of determining OBD system noncompliance in-use.

(iv) For monitors subject to meeting the minimum in-use monitor performance ratio of 0.100 in paragraph (d)(1)(ii), the OBD system shall not be considered noncompliant unless a representative sample indicates the in-use ratio is below 0.050.

(v) An OBD system shall not be considered noncompliant solely due to a failure or deterioration mode of a monitored component or system that could not have been reasonably foreseen to occur by the manufacturer.

(3) *For model years 2016 through 2018.* (i) On the engine ratings tested according to (l)(2)(iii) of this section, the certification emissions thresholds shall apply in-use.

(ii) On the manufacturer's remaining engine ratings, separate in-use emissions thresholds shall apply. These thresholds are determined by doubling the applicable thresholds as shown in Table 1 of paragraph (g) and Table 2 of paragraph (h) of this section. The resultant thresholds apply only in-use and do not apply for certification or selective enforcement auditing.

(iii) An OBD system shall not be considered noncompliant solely due to a failure or deterioration mode of a monitored component or system that could not have been reasonably foreseen to occur by the manufacturer.

(4) *For model years 2019 and later.* (i) On all engine ratings, the certification emissions thresholds shall apply in-use.

(ii) An OBD system shall not be considered noncompliant solely due to a failure or deterioration mode of a monitored component or system that could not have been reasonably foreseen to occur by the manufacturer.

(q) *Optional phase-in for hybrid vehicles.* This paragraph (q) applies for model year 2013 through 2015 engines when used with hybrid powertrain systems. It also applies for model year 2016 engines used with hybrid powertrain systems that were offered for sale prior to January 1, 2013, as specified in paragraph (q)(4) of this section. Manufacturers choosing to use the provisions of this paragraph (q) must submit an annual pre-compliance report to EPA for model years 2013 and later, as specified in paragraph (q)(5) of this section. Note that all hybrid powertrain systems must be fully compliant with the OBD requirements of this section no later than model year 2017.

(1) If an engine-hybrid system has been certified by the California Air Resources Board with respect to its OBD requirements and it effectively meets the full OBD requirements of this section, all equivalent systems must meet those same requirements and may not be certified under this paragraph (q). For purposes of this paragraph (q)(1), an engine-hybrid system is considered to be equivalent to the certified system if it uses the same basic design (*e.g.* displacement) for the engine and primary hybrid components (see paragraph (q)(4) of this section). Equivalent systems may have minor hardware or calibration differences.

(2) As of 2013, if an engine-hybrid system has not been certified to meet the full OBD requirements of this section, it must comply with the following requirements:

(i) The engine in its installed configuration must meet the EMD and EMD + requirements in 13 CCR §1971.1(d)(7.1.4) of the California Code of Regulations. For purposes of this paragraph (q), a given EMD requirement is deemed to be met if the engine's OBD system addresses the same function. This allowance does not apply for OBD monitors or diagnostics that have been modified under paragraph (q)(2)(ii) of this section.

(ii) The engine-hybrid system must maintain existing OBD capability for engines where the same or equivalent engine has been OBD certified. An equivalent engine is one produced by the same engine manufacturer with the

same fundamental design, but that may have hardware or calibration differences that do not impact OBD functionality, such as slightly different displacement, rated power, or fuel system. (Note that engines with the same fundamental design will be presumed to be equivalent unless the manufacturer demonstrates that the differences effectively preclude applying equivalent OBD systems.) Though the OBD capability must be maintained, it does not have to meet detection thresholds (as described in Tables 1 and 2 of this section) and in-use performance frequency requirements (as described in paragraph (d) of this section). A manufacturer may modify detection thresholds to prevent false detection, and must indicate all deviations from the originally certified package with engineering justification in the certification documentation.

(iii) This paragraph (q)(2)(iii) applies for derivatives of hybrid powertrain system designs that were offered for sale prior to January 1, 2013. Until these systems achieve full OBD certification, they must at a minimum maintain all fault-detection and diagnostic capability included on similar systems offered for sale prior to 2013. Manufacturers choosing to use the provisions of this paragraph (q)(2) must keep copies of the service manuals (and similar documents) for these previous model years to show the technical description of the system's fault detection and diagnostic capabilities.

(iv) You must submit an annual pre-compliance report to EPA for model years 2013 and later, as specified in paragraph (q)(5) of this section.

(3) Engine-hybrid systems may be certified to the requirements of paragraph (q)(2) of this section by the engine manufacturer, the hybrid system manufacturer, or the vehicle manufacturer. If engine manufacturers certify the engine hybrid system, they must provide detailed installation instructions. Where the engine manufacturer does not specifically certify its engines for use in hybrid vehicles under this paragraph (q), the hybrid system manufacturer and vehicle manufacturer must install the engine to conform to the requirements of this section (*i.e.*, full OBD) or recertify under paragraph (q)(2) of this section.

(4) The provisions of this paragraph (q) apply for model year 2016 engines where you demonstrate that the hybrid powertrain system used is a derivative of a design that was offered for sale prior to January 1, 2013. In this case, you may ask us to consider the original system and the later system to be the same model for purposes of this paragraph (q), unless the systems are fundamentally different. In determining whether such systems are derivative or fundamentally different, we will consider factors such as the similarity of the following:

(i) Transmissions.

(ii) Hybrid machines (where ''hybrid machine'' means any system that is the part of a hybrid vehicle system that captures energy from and returns energy to the powertrain).

(iii) Hybrid architecture (such as parallel or series).

(iv) Motor/generator size, controller/CPU (memory or inputs/outputs), control algorithm, and batteries. This paragraph (q)(4)(iv) applies only if all of these are modified simultaneously.

(5) Manufacturers choosing to use the provisions of this paragraph (q) must submit an annual pre-compliance report to EPA for model years 2013 and later. Engine manufacturers must submit this report with their engine certification information. Hybrid manufacturers that are not certifying the engine-hybrid system must submit their report by June 1 of the model year, or at the time of certification if they choose to certify. Include the following in the report:

(i) A description of the manufacturer's product plans and of the engine-hybrid systems being certified.

(ii) A description of activities undertaken and progress made by the manufacturer towards achieving full OBD certification, including monitoring, diagnostics, and standardization.

(iii) For model year 2016 engines, a description of your basis for applying the provision of this paragraph (q) to the engines.

(6) Manufacturers that modify the engine's diagnostic system from the approved configuration to be compatible with a hybrid powertrain system

under this paragraph (q) must add the following compliance statement to the ECI label: ''for use in hybrid applications only''.

[74 FR 8369, Feb. 24, 2009, as amended at 76 FR 57374, Sept. 15, 2011; 78 FR 36388, June 17, 2013]

§ 86.010–38 Maintenance instructions.

(a) The manufacturer shall furnish or cause to be furnished to the purchaser of each new motor vehicle (or motor vehicle engine) subject to the standards prescribed in § 86.099–8, § 86.004–9, § 86.004–10, or § 86.004–11, as applicable, written instructions for the proper maintenance and use of the vehicle (or engine), by the purchaser consistent with the provisions of § 86.004–25, which establishes what scheduled maintenance the Administrator approves as being reasonable and necessary.

(1) The maintenance instructions required by this section shall be in clear, and to the extent practicable, nontechnical language.

(2) The maintenance instructions required by this section shall contain a general description of the documentation which the manufacturer will require from the ultimate purchaser or any subsequent purchaser as evidence of compliance with the instructions.

(b) Instructions provided to purchasers under paragraph (a) of this section shall specify the performance of all scheduled maintenance performed by the manufacturer on certification durability vehicles and, in cases where the manufacturer performs less maintenance on certification durability vehicles than the allowed limit, may specify the performance of any scheduled maintenance allowed under § 86.004–25.

(c) Scheduled emission-related maintenance in addition to that performed under § 86.004–25(b) may only be recommended to offset the effects of abnormal in-use operating conditions, except as provided in paragraph (d) of this section. The manufacturer shall be required to demonstrate, subject to the approval of the Administrator, that such maintenance is reasonable and technologically necessary to assure the proper functioning of the emission control system. Such additional recommended maintenance shall be clearly differentiated, in a form approved by the Administrator, from that approved under § 86.004–25(b).

(d) Inspections of emission-related parts or systems with instructions to replace, repair, clean, or adjust the parts or systems if necessary, are not considered to be items of scheduled maintenance which insure the proper functioning of the emission control system. Such inspections, and any recommended maintenance beyond that approved by the Administrator as reasonable and necessary under paragraphs (a), (b), and (c) of this section, may be included in the written instructions furnished to vehicle owners under paragraph (a) of this section: Provided, That such instructions clearly state, in a form approved by the Administrator, that the owner need not perform such inspections or recommended maintenance in order to maintain the emissions defect and emissions performance warranty or manufacturer recall liability.

(e) The manufacturer may choose to include in such instructions an explanation of any distinction between the useful life specified on the label, and the emissions defect and emissions performance warranty period. The explanation must clearly state that the useful life period specified on the label represents the average period of use up to retirement or rebuild for the engine family represented by the engine used in the vehicle. An explanation of how the actual useful lives of engines used in various applications are expected to differ from the average useful life may be included. The explanation(s) shall be in clear, non-technical language that is understandable to the ultimate purchaser.

(f) If approved by the Administrator, the instructions provided to purchasers under paragraph (a) of this section shall indicate what adjustments or modifications, if any, are necessary to allow the vehicle to meet applicable emission standards at elevations above 4,000 feet, or at elevations of 4,000 feet or less.

(g) Manufacturers are subject to the service-information requirements of § 86.1808–01(f) beginning in the 2005 model year for manufacturers of heavy-duty vehicles and heavy-duty engines

weighing 14,000 pounds gross vehicle weight (GVW) and less that are subject to the OBD requirements of this part.

(h) The manufacturer shall furnish or cause to be furnished to the purchaser of each new motor engine subject to the standards prescribed in § 86.004–10 or § 86.004–11, as applicable, the following:

(1) Instructions for all maintenance needed after the end of the useful life of the engine for critical emissions-related components as provided in § 86.004–25(b), including recommended practices for diagnosis, cleaning, adjustment, repair, and replacement of the component (or a statement that such component is maintenance free for the life of the engine) and instructions for accessing and responding to any emissions-related diagnostic codes that may be stored in on-board monitoring systems;

(2) A copy of the engine rebuild provisions contained in § 86.004–40.

(i) Through model year 2013, the manufacturer shall furnish or cause to be furnished to the ultimate purchaser the following statement for each new diesel-fueled engine subject to the standards prescribed in § 86.007–11, as applicable: ''This engine must be operated only with ultra low-sulfur diesel fuel (meeting EPA specifications for highway diesel fuel, including a 15 ppm sulfur cap).''

(j) The following provisions describe requirements related to emission control diagnostic service information for heavy-duty engines used in vehicles over 14,000 pounds gross vehicle weight (GVW):

(1) Manufacturers of heavy-duty engines used in applications weighing more than 14,000 pounds gross vehicle weight (GVW) that are subject to the applicable OBD requirements of this subpart A are subject to the provisions of this paragraph (j) beginning in the 2010 model year. The provisions of this paragraph (j) apply only to those heavy-duty engines subject to the applicable OBD requirements.

(2) Upon Administrator approval, manufacturers of vehicles may alternatively comply with all service information and tool provisions found in § 86.1808–01 that are applicable to 2001 and subsequent model year vehicles weighing less than 14,000 pounds gross vehicle weight (GVW). Upon Administrator approval, manufacturers that produce engines for use in vehicles between 8,500 and 14,000 pounds may, for those engines, alternatively comply with all service information and tool provisions in § 86.010–38(j) that are applicable to 2010 and subsequent model year vehicles over 14,000 pounds. Implementation dates must comply with the service information provision dates applicable to engines in vehicles between 8,500 and 14,000 pounds.

(3) *General requirements.* (i) Manufacturers shall furnish or cause to be furnished to any person engaged in the repairing or servicing of heavy-duty engines, or the Administrator upon request, any and all information needed to make use of the on-board diagnostic system and such other information, including instructions for making emission-related diagnosis and repairs, including but not limited to service manuals, technical service bulletins, recall service information, bi-directional control information, and training information, unless such information is protected by section 208(c) as a trade secret. Manufacturers may take steps to restrict warranty and customer assurance plan information used only for the purpose of providing such manufacturer covered repairs to only those repair locations authorized by the manufacturer. No such information may be withheld under section 208(c) of the Act if that information is provided (directly or indirectly) by the manufacturer to franchised dealers, authorized service networks, or other persons engaged in the repair, diagnosing, or servicing of heavy-duty engines.

(ii) *Definitions.* The following definitions apply for this paragraph (j):

(A) *Aftermarket service provider* means any individual or business engaged in the diagnosis, service, and repair of a heavy-duty engine, who is not directly affiliated with a manufacturer or manufacturer franchised dealership, or authorized service network.

(B) *Authorized service network* means a group of independent service and repair facilities that are recognized by engine manufacturers as being capable of performing repairs to factory specification, including warranty repair work.

(C) *Bi-directional control* means the capability of a diagnostic tool to send messages on the data bus that temporarily overrides the module's control over a sensor or actuator and gives control to the diagnostic tool operator. Bi-directional controls do not create permanent changes to engine or component calibrations.

(D) *Data stream information* means information (i.e., messages and parameters) originated within the engine by a module or intelligent sensors (i.e., a sensor that contains and is controlled by its own module) and transmitted between a network of modules and/or intelligent sensors connected in parallel with either one or more communication wires. The information is broadcast over the communication wires for use by the OBD system to gather information on emissions-related components or systems and from other engine modules that may impact emissions. For the purposes of this section, data stream information does not include engine calibration related information, or any data stream information from systems or modules that do not impact emissions.

(E) *Emissions-related information* means any information related to the diagnosis, service, and repair of emissions-related components. Emissions-related information includes, but is not limited to, information regarding any system, component or part of an engine that controls emissions and that is part of the diagnostic strategy for an OBD monitor, but not limited to: The engine, the fuel system and ignition system; information for any system, component or part that is likely to impact emissions, and any other information specified by the Administrator to be relevant to the diagnosis and repair of an emissions-related problem; any other information specified by the Administrator to be relevant for the diagnosis and repair of an emissions-related failure found through an evaluation of vehicles in-use and after such finding has been communicated to the affected manufacturer(s).

(F) *Emissions-related training information* means any information related training or instruction for the purpose of the diagnosis, service, and repair of emissions-related components.

(G) *Enhanced service and repair information* means information which is specific for an original equipment manufacturer's brand of tools and equipment. This includes computer or anti-theft system initialization information necessary for the completion of any emissions-related repair on engines that employ integral security systems.

(H) *Equipment and tool company* means a registered equipment or software company either public or private that is engaged in, or plans to engage in, the manufacture of scan tool reprogramming equipment or software.

(I) *Generic service and repair information* means information which is not specific for an original equipment manufacturer's brand of tools and equipment.

(J) *Indirect information* means any information that is not specifically contained in the service literature, but is contained in items such as tools or equipment provided to franchised dealers or authorized service networks (or others). This includes computer or anti-theft system initialization information necessary for the completion of any emissions-related repair on engines that employ integral security systems.

(K) *Intermediary* means any individual or entity, other than an original equipment manufacturer, which provides service or equipment to aftermarket service providers.

(L) *Manufacturer franchised dealership* means any service provider with which a manufacturer has a direct business relationship.

(M) *Recalibration* means the process of downloading to an engine's on-board computer emissions-related revisions of on-board computer application software and calibration parameters with default configurations. Recalibration is not dependent on the use of the vehicle identification number (VIN) in determining vehicle configuration.

(N) *Reconfiguration* means the process of enabling or adjusting engine features or engine parameters associated with such features to adapt a heavy-duty engine to a particular vehicle and/or application.

(O) *Third party information provider* means any individual or entity, other than an original equipment manufacturer, who consolidates manufacturer

service information and makes this information available to aftermarket service providers.

(P) *Third party training provider* means any individual or entity, other than an original equipment manufacturer who develops and/or delivers instructional and educational material for training courses.

(4) *Information dissemination.* By July 1, 2010 each manufacturer shall provide or cause to be provided to the persons specified in paragraph (j)(3)(i) of this section and to any other interested parties a manufacturer-specific World Wide Web site containing the information specified in paragraph (j)(3)(i) of this section for 2010 and later model year engines which have been certified to the OBD requirements specified in § 86.010–18 and are offered for sale; this requirement does not apply to indirect information, including the information specified in paragraphs (j)(13) through (j)(17) of this section. Upon request and approval of the Administrator, manufacturers who can demonstrate significant hardship in complying with this provision by August 27, 2009, may request an additional six months lead time to meet this requirement. Each manufacturer Web site shall:

(i) Provide access in full-text to all of the information specified in paragraph (j)(6) of this section.

(ii) Be updated at the same time as manufacturer franchised dealership or authorized service network World Wide Web sites.

(iii) Provide users with a description of the minimum computer hardware and software needed by the user to access that manufacturer's information (e.g., computer processor speed and operating system software). This description shall appear when users first logon to the home page of the manufacturer's Web site.

(iv) Upon Administrator approval, implement a range of time periods for online access to any person specified in paragraph (j)(3)(i) of this section whereby the user will be able to access the site, search for the information, and purchase, view and print the information at a fair and reasonable cost as specified in paragraph (j)(8) of this section for each of the options. In addition, for each of the range of time periods, manufacturers are required to make their entire site accessible for the respective period of time and price. In other words, a manufacturer may not limit Web site access to just one make or one model.

(v) Allow the user to search the manufacturer Web site by various topics including but not limited to model, model year, key words or phrases, etc., while allowing ready identification of the latest calibration. Manufacturers who do not use model year to classify their engines in their service information may use an alternate delineation such as body series. Any manufacturer utilizing this flexibility shall create a cross-reference to the corresponding model year and provide this cross-reference on the manufacturer Web site home page.

(vi) Provide accessibility using common, readily available software and shall not require the use of software, hardware, viewers, or browsers that are not readily available to the general public. Manufacturers shall also provide hyperlinks to any plug-ins, viewers or browsers (e.g. Adobe Acrobat or Netscape) needed to access the manufacturer Web site.

(vii) Allow simple hyper-linking to the manufacturer Web site from Government Web sites and automotive-related Web sites.

(viii) Possess sufficient server capacity to allow ready access by all users and has sufficient capacity to assure that all users may obtain needed information without undue delay.

(ix) Correct or delete any reported broken Web links on a weekly basis.

(x) Allow for Web site navigation that does not require a user to return to the manufacturer home page or a search engine in order to access a different portion of the site.

(xi) Allow users to print out any and all of the materials required to be made available on the manufacturers Web site that can be reasonably printed on a standard printer, including the ability to print it at the user's location.

(5) *Small volume provisions for information dissemination.* (i) Manufacturers with total annual sales of less than 5,000 engines shall have until July 1, 2011 to launch their individual Web

sites as required by paragraph (j)(4) of this section.

(ii) Manufacturers with total annual sales of less than 1,000 engines may, in lieu of meeting the requirement of paragraph (j)(4) of this section, request the Administrator to approve an alternative method by which the required emissions-related information can be obtained by the persons specified in paragraph (j)(3)(i) of this section.

(6) *Required information.* All information relevant to the diagnosis and completion of emissions-related repairs shall be posted on manufacturer Web sites. This excludes indirect information specified in paragraphs (j)(7) and (j)(13) through (j)(17) of this section. To the extent that this information does not already exist in some form for their manufacturer franchised dealerships or authorized service networks, manufacturers are required to develop and make available the information required by this section to both their manufacturer franchised dealerships or authorized service networks and the aftermarket. The required information includes, but is not limited to:

(i) Manuals, including subsystem and component manuals developed by a manufacturer's third party supplier that are made available to manufacturer franchised dealerships or authorized service networks, technical service bulletins (TSBs), recall service information, diagrams, charts, and training materials. Informal recall service information such as engineering notes and/or sketches are not required to be made available as long as this information is not made available to manufacturer franchised dealerships or authorized service networks in the form of manuals. Manuals and other such service information from third party suppliers are not required to be made available in full-text on manufacturer Web sites as described in paragraph (j)(4) of this section. Rather, manufacturers must make available on the manufacturer Web site as required by paragraph (j)(4) of this section an index of the relevant information and instructions on how to order such information. In the alternate, a manufacturer can create a link from its Web site to the Web site(s) of the third party supplier.

(ii) OBD system information which includes, but is not limited to, the following:

(A) A general description of the operation of each monitor, including a description of the parameter that is being monitored;

(B) A listing of all typical OBD diagnostic trouble codes associated with each monitor;

(C) A description of the typical enabling conditions (either generic or monitor-specific) for each monitor (if equipped) to execute during engine operation, including, but not limited to, minimum and maximum intake air and engine coolant temperature, speed range, and time after engine startup. In addition, manufacturers shall list all monitor-specific OBD drive cycle information for all major OBD monitors as equipped including, but not limited to, catalyst, catalyst heater, oxygen sensor, oxygen sensor heater, evaporative system, exhaust gas re-circulation (EGR), secondary air, and air conditioning system. Additionally, for diesel engines which also perform misfire, fuel system and comprehensive component monitoring under specific driving conditions (i.e., non-continuous monitoring; as opposed to spark ignition engines that monitor these systems under all conditions or continuous monitoring), the manufacturer shall make available monitor-specific drive cycles for these monitors. Any manufacturer who develops generic drive cycles, either in addition to, or instead of, monitor-specific drive cycles shall also make these available in full-text on manufacturer Web sites;

(D) A listing of each monitor sequence, execution frequency and typical duration;

(E) A listing of typical malfunction thresholds for each monitor;

(F) For OBD parameters for specific engines that deviate from the typical parameters, the OBD description shall indicate the deviation and provide a separate listing of the typical values for those engines;

(G) Identification and scaling information necessary to interpret and understand data available through Diagnostic Message 8 pursuant to SAE J1939–73 (as specified in paragraph

(j)(17) of this section), or through Service/Mode $06 pursuant to SAE J1979 (as specified in paragraph (j)(17) of this section).

(H) Algorithms, look-up tables, or any values associated with look-up tables are not required to be made available.

(iii) Any information regarding any system, component, or part of a engine monitored by the OBD system that could in a failure mode cause the OBD system to illuminate the malfunction indicator light (MIL);

(iv) Manufacturer-specific emissions-related diagnostic trouble codes (DTCs) and any related service bulletins, troubleshooting guides, and/or repair procedures associated with these manufacturer-specific DTCs; and

(v) Information regarding how to obtain the information needed to perform reinitialization of any computer or anti-theft system following an emissions-related repair.

(7) *Anti-theft System Initialization Information*. Computer or anti-theft system initialization information and/or related tools necessary for the proper installation of on-board computers or necessary for the completion of any emissions-related repair on engines that employ integral security systems or the repair or replacement of any other emission-related part shall be made available at a fair and reasonable cost to the persons specified in paragraph (j)(3)(i) of this section.

(i) Except as provided under paragraph (j)(7)(ii) of this section, manufacturers must make this information available to persons specified in paragraph (j)(3)(i) of this section, such that such persons will not need any special tools or manufacturer-specific scan tools to perform the initialization. Manufacturers may make such information available through, for example, generic aftermarket tools, a pass-through device, or inexpensive manufacturer specific cables.

(ii) A manufacturer may request Administrator approval for an alternative means to re-initialize engines for some or all model years through the 2013 model year by July 27, 2009. The Administrator shall approve the request only after the following conditions have been met:

(A) The manufacturer must demonstrate that the availability of such information to aftermarket service providers would significantly increase the risk of theft.

(B) The manufacturer must make available a reasonable alternative means to install or repair computers, or to otherwise repair or replace an emission-related part.

(C) Any alternative means proposed by a manufacturer cannot require aftermarket technicians to use a manufacturer franchised dealership or authorized service networks to obtain information or special tools to re-initialize the anti-theft system. All information must come directly from the manufacturer or a single manufacturer-specified designee.

(D) Any alternative means proposed by a manufacturer must be available to aftermarket technicians at a fair and reasonable price.

(E) Any alternative must be available to aftermarket technicians within twenty-four hours of the initial request.

(F) Any alternative must not require the purchase of a special tool or tools, including manufacturer-specific tools, to complete this repair. Alternatives may include lease of such tools, but only for appropriately minimal cost.

(G) In lieu of leasing their manufacturer-specific tool to meet this requirement, a manufacturer may also choose to release the necessary information to equipment and tool manufacturers for incorporation into aftermarket scan tools. Any manufacturer choosing this option must release the information to equipment and tool manufacturers within 60 days of Administrator approval.

(8) *Cost of required information*. (i) All information required to be made available by this section, shall be made available at a fair and reasonable price. In determining whether a price is fair and reasonable, consideration may be given to relevant factors, including, but not limited to, the following:

(A) The net cost to the manufacturer franchised dealerships or authorized service networks for similar information obtained from manufacturers, less any discounts, rebates, or other incentive programs;

(B) The cost to the manufacturer for preparing and distributing the information, excluding any research and development costs incurred in designing and implementing, upgrading or altering the onboard computer and its software or any other engine part or component. Amortized capital costs for the preparation and distribution of the information may be included;

(C) The price charged by other manufacturers for similar information;

(D) The price charged by manufacturers for similar information prior to the launch of manufacturer Web sites;

(E) The ability of the average aftermarket technician or shop to afford the information;

(F) The means by which the information is distributed;

(G) The extent to which the information is used, which includes the number of users, and frequency, duration, and volume of use; and

(H) Inflation.

(ii) Manufacturers must submit to EPA a request for approval of their pricing structure for their Web sites and amounts to be charged for the information required to be made available under paragraphs (j)(4) and (j)(6) of this section at least 180 days in advance of the launch of the web site. Subsequent to the approval of the manufacturer Web site pricing structure, manufacturers shall notify EPA upon the increase in price of any one or all of the subscription options of 20 percent or more above the previously approved price, taking inflation into account.

(A) The manufacturer shall submit a request to EPA that sets forth a detailed description of the pricing structure and amounts, and support for the position that the pricing structure and amounts are fair and reasonable by addressing, at a minimum, each of the factors specified in paragraph (j)(8)(i) of this section.

(B) EPA will act upon on the request within180 days following receipt of a complete request or following receipt of any additional information requested by EPA.

(C) EPA may decide not to approve, or to withdraw approval for a manufacturer's pricing structure and amounts based on a conclusion that this pricing structure and/or amounts are not, or are no longer, fair and reasonable, by sending written notice to the manufacturer explaining the basis for this decision.

(D) In the case of a decision by EPA not to approve or to withdraw approval, the manufacturer shall within three months following notice of this decision, obtain EPA approval for a revised pricing structure and amounts by following the approval process described in this paragraph.

(9) *Unavailable information*. Any information which is not provided at a fair and reasonable price shall be considered unavailable, in violation of these regulations and section 202(m)(5) of the Clean Air Act.

(10) *Third party information providers*. (i) By January 1, 2011 manufacturers shall, for model year 2010 and later engines, make available to third-party information providers as defined in paragraph (j)(3)(ii) of this section with whom they may wish to engage in licensing or business arrangements, the required emissions-related information as specified in paragraph (j)(6) of this section either:

(A) Directly in electronic format such as diskette or CD-ROM using nonproprietary software, in English; or

(B) Indirectly via a Web site other than that required by paragraph (j)(4) of this section

(ii) Manufacturers are not responsible for the accuracy of the information distributed by third parties. However, where manufacturers charge information intermediaries for information, whether through licensing agreements or other arrangements, manufacturers are responsible for inaccuracies contained in the information they provide to third party information providers.

(11) *Required emissions-related training information*. By January 1, 2011, for emissions-related training information, manufacturers shall:

(i) Video tape or otherwise duplicate and make available for sale on manufacturer Web sites within 30 days after transmission any emissions-related training courses provided to manufacturer franchised dealerships or authorized service networks via the Internet

or satellite transmission. Manufacturers shall not be required to duplicate transmitted emissions-related training courses if anyone engaged in the repairing or servicing of heavy-duty engines has the opportunity to receive the Internet or satellite transmission, even if there is a cost associated with the equipment required to receive the transmission;

(ii) Provide on the manufacturer Web site an index of all emissions-related training information available for purchase by aftermarket service providers for 2010 and newer engines. The required information must be made available for purchase within 3 months of model introduction and then must be made available at the same time it is made available to manufacturer franchised dealerships or authorized service networks, whichever is earlier. The index shall describe the title of the course or instructional session, the cost of the video tape or duplicate, and information on how to order the item(s) from the manufacturer Web site. All of the items available must be shipped within 3 business day of the order being placed and are to made available at a fair and reasonable price as described in paragraph (j)(8) of this section. Manufacturers unable to meet the 3 business day shipping requirement under circumstances where orders exceed supply and additional time is needed by the distributor to reproduce the item being ordered, may exceed the 3 business day shipping requirement, but in no instance can take longer than 14 days to ship the item.

(12) *Timeliness and maintenance of information dissemination.* (i) Subsequent to the initial launch of the manufacturer's Web site, manufacturers must make the information required under paragraph (j)(6) of this section available on their Web site within six months of model introduction, or at the same time it is made available to manufacturer franchised dealerships or authorized service networks, whichever is earlier. After this six month period, the information must be available and updated on the manufacturer Web site at the same time that the updated information is made available to manufacturer franchised dealerships or authorized service networks, except as otherwise specified in this section.

(ii) *Archived information.* Manufacturers must maintain the required information on their Web sites in full-text as defined in paragraph (j)(6) of this section for a minimum of 15 years after model introduction. Subsequent to this fifteen year period, manufacturers may archive the information in the manufacturer's format of choice and provide an index of the archived information on the manufacturer Web site and how it can be obtained by interested parties. Manufacturers shall index their available information with a title that adequately describes the contents of the document to which it refers. Manufacturers may allow for the ordering of information directly from their Web site, or from a Web site hyperlinked to the manufacturer Web site. In the alternate, manufacturers shall list a phone number and address where aftermarket service providers can call or write to obtain the desired information. Manufacturers must also provide the price of each item listed, as well as the price of items ordered on a subscription basis. To the extent that any additional information is added or changed for these model years, manufacturers shall update the index as appropriate. Manufacturers will be responsible for ensuring that their information distributors do so within one regular business day of receiving the order. Items that are less than 20 pages (e.g. technical service bulletins) shall be faxed to the requestor and distributors are required to deliver the information overnight if requested and paid for by the ordering party. Archived information must be made available on demand and at a fair and reasonable price.

(13) *Recalibration information.* (i) Manufacturers shall make available to the persons specified in paragraph (j)(3)(i) of this section all emissions-related recalibration or reprogramming events (including driveability reprogramming events that may affect emissions) in the format of their choice at the same time they are made available to manufacturer franchised dealerships or authorized service networks. This requirement applies on July 1, 2013.

(ii) Manufacturers shall provide persons specified in paragraph (j)(3)(i) of this section with an efficient and cost-effective method for identifying whether the calibrations on engines are the latest to be issued. This requirement applies on July 1, 2013.

(iii) For all 2013 and later OBD engines equipped with reprogramming capability, manufacturers shall comply with either SAE J2534–1 (as specified in paragraph (j)(17) of this section), or the Technology and Maintenance Council's (TMC) Recommended Practice TMC RP 1210B (as specified in paragraph (j)(17) of this section).

(iv) For model years 2013 and later, manufacturers shall make available to aftermarket service providers the necessary manufacturer-specific software applications and calibrations needed to initiate pass-through reprogramming. This software shall be able to run on a standard personal computer that utilizes standard operating systems as specified in either SAE J2534–1 (as specified in paragraph (j)(17) of this section) or TMC RP 1210B (as specified in paragraph (j)(17) of this section).

(v) Manufacturers may take any reasonable business precautions necessary to protect proprietary business information and are not required to provide this information to any party that does not agree to these reasonable business precautions. The requirements to make hardware available and to release the information to equipment and tool companies apply on July 1, 2013, and within 3 months of model introduction for all new model years.

(14) *Generic and enhanced information for scan tools.* By July 1, 2013, manufacturers shall make available to equipment and tool companies all generic and enhanced service information including bi-directional control and data stream information as defined in paragraph (j)(3(ii) of this section. This requirement applies for 2013 and later model year engines.

(i) The information required by this paragraph (j)(14) shall be provided electronically using common document formats to equipment and tool companies with whom they have appropriate licensing, contractual, and/or confidentiality arrangements. To the extent that a central repository for this information (e.g. the TEK–NET library developed by the Equipment and Tool Institute) is used to warehouse this information, the Administrator shall have free unrestricted access. In addition, information required by this paragraph (j)(14) shall be made available to equipment and tool companies who are not otherwise members of any central repository and shall have access if the non-members have arranged for the appropriate licensing, contractual and/or confidentiality arrangements with the manufacturer and/or a central repository.

(ii) In addition to the generic and enhanced information defined in paragraph (j)(3)(ii) of this section, manufacturers shall also make available the following information necessary for developing generic diagnostic scan tools:

(A) The physical hardware requirements for data communication (e.g., system voltage requirements, cable terminals/pins, connections such as RS232 or USB, wires, etc.),

(B) Electronic Control Unit (ECU) data communication (e.g., serial data protocols, transmission speed or baud rate, bit timing requirements, etc.),

(C) Information on the application physical interface (API) or layers. (i.e., processing algorithms or software design descriptions for procedures such as connection, initialization, and termination),

(D) Engine application information or any other related service information such as special pins and voltages or additional connectors that require enablement and specifications for the enablement.

(iii) Any manufacturer who utilizes an automated process in their manufacturer-specific scan tool for diagnostic fault trees shall make available to equipment and tool companies the data schema, detail specifications, including category types/codes and codes, and data format/content structure of the diagnostic trouble trees.

(iv) Manufacturers can satisfy the requirement of paragraph (j)(14)(iii) of this section by making available diagnostic trouble trees on their manufacturer Web sites in full-text.

(v) Manufacturers shall make all required information available to the requesting equipment and tool company

within 14 days after the request to purchase has been made unless the manufacturer requests Administrator approval to refuse to disclose such information to the requesting company or requests Administrator approval for additional time to comply. After receipt of a request and consultation with the affected parties, the Administrator shall either grant or refuse the petition based on the evidence submitted during the consultation process:

(A) If the evidence demonstrates that the engine manufacturer has a reasonably based belief that the requesting equipment and tool company could not produce safe and functionally accurate tools that would not cause damage to the engine, the petition for non-disclosure will be granted. Engine manufacturers are not required to provide data stream and bi-directional control information that would permit an equipment and tool company's products to modify an EPA-certified engine or transmission configuration.

(B) If the evidence does not demonstrate that the engine manufacturer has a reasonably-based belief that the requesting equipment and tool company could not produce safe and functionally accurate tools that would not cause damage to the engine, the petition for non-disclosure will be denied and the engine manufacturer, as applicable, shall make the requested information available to the requesting equipment and tool company within 2 days of the denial.

(vi) If the manufacturer submits a request for Administrator approval for additional time, and satisfactorily demonstrates to the Administrator that the engine manufacturer is able to comply but requires additional time within which to do so, the Administrator shall grant the request and provide additional time to fully and expeditiously comply.

(vii) Manufacturers may require that tools using information covered under paragraph (j)(14) of this section comply with the Component Identifier message specified in SAE J1939–71 (as specified in paragraph (j)(17) of this section) as Parameter Group Number (PGN) 65249 (including the message parameter's make, model, and serial number) and the SAE J1939–81 (as specified in paragraph (j)(17) of this section) Address Claim PGN.

(viii) Manufacturers are not required to make available to equipment and tool companies any information related to reconfiguration capabilities or any other information that would make permanent changes to existing engine configurations.

(15) *Availability of manufacturer-specific scan tools.* (i) By July 1, 2013, manufacturers shall make available for sale to the persons specified in paragraph (j)(3)(i) of this section their own manufacturer-specific diagnostic tools at a fair and reasonable cost. These tools shall also be made available in a timely fashion either through the manufacturer Web site or through a manufacturer-designated intermediary. Upon Administrator approval, manufacturers will not be required to make available manufacturer-specific tools with reconfiguration capabilities if they can demonstrate to the satisfaction of the Administrator that these tools are not essential to the completion of an emissions-related repair, such as recalibration. As a condition of purchase, manufacturers may request that the purchaser take all necessary training offered by the engine manufacturer. Any required training materials and classes must comply with the following:

(A) Similar training must be required by the engine manufacturer for the use of the same tool by its franchised dealerships or authorized service networks;

(B) The training must be substantially similar to such training in terms of material covered and the length of training;

(C) The training must be made available within six months after a tool request has been made;

(D) The training must be made available at a fair and reasonable price.

(ii) Manufacturers shall ship purchased tools in a timely manner after a request and training, if any, has been completed. Any required training materials and classes must be made available at a fair and reasonable price. Manufacturers who develop different versions of one or more of their diagnostic tools that are used in whole or in part for emission-related diagnosis and repair shall also insure that all

emission-related diagnosis and repair information is available for sale to the aftermarket at a fair and reasonable cost. Factors for determining fair and reasonable cost include, but are not limited to:

(A) The net cost to the manufacturer's franchised dealerships or authorized service network for similar tools obtained from manufacturers, less any discounts, rebates, or other incentive programs;

(B) The cost to the manufacturer for preparing and distributing the tools, excluding any research and development costs;

(C) The price charged by other manufacturers of similar sizes for similar tools;

(D) The capabilities and functionality of the manufacturer tool;

(E) The means by which the tools are distributed;

(F) Inflation;

(G) The ability of aftermarket technicians and shops to afford the tools.

Manufacturers shall provide technical support to aftermarket service providers for the tools described in this section, either themselves or through a third-party of their choice.

(16) *Changing content of manufacturer-specific scan tools.* Manufacturers who opt to remove non-emissions related content from their manufacturer-specific scan tools and sell them to the persons specified in paragraph (j)(3)(i) of this section shall adjust the cost of the tool accordingly lower to reflect the decreased value of the scan tool. All emissions-related content that remains in the manufacturer-specific tool shall be identical to the information that is contained in the complete version of the manufacturer-specific tool. Any manufacturer who wishes to implement this option must request approval from the Administrator prior to the introduction of the tool into commerce.

(17) *Reference materials.* Manufacturers shall conform with the following industry standards. These documents are incorporated by reference in § 86.1. Anyone may inspect copies at the U.S. EPA or at the National Archives and Records Administration (NARA). For information on the availability of this material at U.S. EPA, NARA, or the standard making bodies directly, refer to § 86.1.

(i) SAE J1939–71, Revised January 2008. For providing a means for the application processes to access the OSI environment, manufacturers shall comply with this industry standard.

(ii) SAE J1939–73, Revised September 2006. For identification and scaling information necessary to interpret and understand data available through Diagnostic Message 8, manufacturers shall comply with this industry standard. In the alternate, manufacturers may comply with Service/Mode $06 pursuant to SAE J1979, Revised May 2007. These recommended practices describe the implementation of diagnostic test modes for emissions related test data. Manufacturers shall comply with either SAE J1939–73 or SAE J1979 beginning with Model Year 2013.

(iii) SAE J1939–81, Revised May 2003. For management of source addresses and the association of those address with an actual function and with the detection and reporting of network realized errors, manufacturers shall comply with this industry standard.

(iv) SAE J2403, Revised August 2007. For Web-based delivery of service information, manufacturers shall comply with this industry standard which standardizes various terms, abbreviations, and acronyms associated with on-board diagnostics. Manufacturers shall comply with SAE J2403 beginning with the Model Year 2013.

(v) TMC RP 1210B, Revised June 2007. For pass-thru reprogramming capabilities, manufacturers shall comply with Technology and Maintenance Council's (TMC) Recommended Practice TMC RP 1210B. In the alternate, manufacturers may comply with SAE J2534–1, Revised December 2004. These recommended practices provide technical specifications and information that manufacturers must supply to equipment and tool companies to develop aftermarket pass-thru reprogramming tools. Manufacturers shall comply with either TMC RP 1210B or SAE J2534–1 beginning with Model Year 2013.

(18) *Reporting requirements.* Performance reports that adequately demonstrate that each manufacturers website meets the information requirements outlined in paragraphs (j)(6)(i)

through (j)(6)(vi) of this section shall be submitted to the Administrator annually or upon request by the Administrator. These reports shall indicate the performance and effectiveness of the websites by using commonly used Internet statistics (e.g., successful requests, frequency of use, number of subscriptions purchased, etc.). Manufacturers shall provide to the Administrator reports on an annual basis within 30 days of the end of the calendar year. These annual reports shall be submitted to the Administrator electronically utilizing non-proprietary software in the format as agreed to by the Administrator and the manufacturers.

(19) *Prohibited acts, liability and remedies.* (i) It is a prohibited act for any person to fail to promptly provide or cause a failure to promptly provide information as required by this paragraph (j), or to otherwise fail to comply or cause a failure to comply with any provision of this subsection.

(ii) Any person who fails or causes the failure to comply with any provision of this paragraph (j) is liable for a violation of that provision. A corporation is presumed liable for any violations of this subpart that are committed by any of its subsidiaries, affiliates or parents that are substantially owned by it or substantially under its control.

(iii) Any person who violates a provision of this paragraph (j) shall be subject to a civil penalty of not more than $ 31,500 per day for each violation. This maximum penalty is shown for calendar year 2002. Maximum penalty limits for later years may be set higher based on the Consumer Price Index, as specified in 40 CFR part 19. In addition, such person shall be liable for all other remedies set forth in Title II of the Clean Air Act, remedies pertaining to provisions of Title II of the Clean Air Act, or other applicable provisions of law.

(iv) Manufacturers will not have any emissions warranty, in-use compliance, defect reporting or recall liability for service on a heavy-duty engine that is not undertaken by the manufacturer, for any damage caused by their own tools in the hands of independent service providers, or for the use and misuse of third party tools.

[74 FR 8408, Feb. 24, 2009, as amended at 75 FR 22978, Apr. 30, 2010; 79 FR 23689, Apr. 28, 2014]

§ 86.012–2 Definitions.

The definitions of § 86.010–2 continue to apply to model year 2010 and later model year vehicles. The definitions listed in this section apply beginning with model year 2012. *Urban bus* means a passenger-carrying vehicle with a load capacity of fifteen or more passengers and intended primarily for intracity operation, *i.e.*, within the confines of a city or greater metropolitan area. Urban bus operation is characterized by short rides and frequent stops. To facilitate this type of operation, more than one set of quick-operating entrance and exit doors would normally be installed. Since fares are usually paid in cash or tokens, rather than purchased in advance in the form of tickets, urban buses would normally have equipment installed for collection of fares. Urban buses are also typically characterized by the absence of equipment and facilities for long distance travel, *e.g.*, rest rooms, large luggage compartments, and facilities for stowing carry-on luggage.

[76 FR 57375, Sept. 15, 2011]

§ 86.016–1 General applicability.

(a) *Applicability.* The provisions of this subpart apply for certain types of new heavy-duty engines and vehicles as described in this paragraph (a). Note that this subpart does not apply for light-duty vehicles, light-duty trucks, or medium-duty passenger vehicles (see subpart S of this part for requirements that apply for those vehicles). In some cases, manufacturers of heavy-duty engines and vehicles can choose whether to meet the requirements of this subpart or the requirements of subpart S of this part; those provisions are therefore considered optional, but only to the extent that manufacturers comply with the other set of requirements. In cases where a provision applies only for a certain vehicle group based on its model year, vehicle class, motor fuel, engine type, or other distinguishing

characteristics, the limited applicability is cited in the appropriate section. The provisions of this subpart apply for certain heavy-duty engines and vehicles as follows:

(1) The provisions of this subpart related to exhaust emission standards apply for diesel-cycle and Otto-cycle heavy-duty engines installed in vehicles above 14,000 pounds GVWR; however, these vehicles may instead be certified under subpart S of this part in certain circumstances as specified in § 86.1801.

(2) The provisions of this subpart related to exhaust emission standards apply for engines that will be installed in incomplete heavy-duty vehicles at or below 14,000 pounds GVWR; however, these vehicles may instead be certified under subpart S of this part as specified in § 86.1801.

(3) Diesel-cycle and Otto-cycle complete heavy-duty vehicles at or below 14,000 pounds GVWR and the corresponding engines are not subject to the provisions of this subpart related to exhaust emission standards, except that these provisions are optional for diesel-cycle engines installed in such vehicles until those vehicles become subject to the Tier 3 standards under § 86.1816–18.

(4) The provisions of this subpart related to evaporative emission standards apply for diesel-cycle and Otto-cycle heavy-duty vehicles as follows:

(i) These provisions do not apply for vehicles at or below 14,000 pounds GVWR.

(ii) Vehicles above 14,000 pounds GVWR must meet evaporative emission standards as specified in 40 CFR 1037.103. This involves meeting the standards specified in §§ 86.008–10(b) and 86.007–11(b)(3) and (4) until the Tier 3 standards in § 86.1813 start to apply.

(iii) Note that diesel-fueled vehicles are not subject to evaporative emissions under this part.

(5) The provisions of this subpart related to onboard diagnostics apply for diesel-cycle and Otto-cycle heavy-duty engines and vehicles as follows:

(i) Engines installed in vehicles above 14,000 pounds GVWR must meet the onboard diagnostic requirements specified in § 86.010–18.

(ii) Engines installed in vehicles at or below 14,000 pounds GVWR must meet the onboard diagnostic requirements specified in § 86.1806.

(b) *Relationship to subpart S of this part.* Unless specified otherwise, if engines are not subject to provisions of this subpart or if manufacturers choose not to meet optional provisions of this subpart as described in paragraph (a) of this section, those engines must be installed in vehicles meeting the corresponding requirements under subpart S of this part. If a vehicle and its installed engine comply with a mix of provisions from this subpart and from subpart S of this part, the vehicle must be certified under subpart S of this part, and the engine does not need to be certified separately.

(c) *Greenhouse gas emission standards.* See 40 CFR parts 1036 and 1037 for greenhouse gas emission standards that apply for heavy-duty engines and vehicles.

(d) *Non-petroleum fueled vehicles.* The standards and requirements of this part apply to model year 2016 and later non-petroleum fueled motor vehicles as follows:

(1) The standards and requirements of this part apply as specified for vehicles fueled with methanol, natural gas, and LPG.

(2) The standards and requirements of subpart S of this part apply as specified for light-duty vehicles and light-duty trucks.

(3) The standards and requirements of this part applicable to methanol-fueled heavy-duty vehicles and engines (including flexible fuel vehicles and engines) apply to heavy-duty vehicles and engines fueled with any oxygenated fuel (including flexible fuel vehicles and engines). Most significantly, this means that the hydrocarbon standards apply as NMHCE and the vehicles and engines must be tested using the applicable oxygenated fuel according to the test procedures in 40 CFR part 1065 applicable for oxygenated fuels. For purposes of this paragraph (d), oxygenated fuel means any fuel containing at least 50 volume percent oxygenated compounds. For example, a fuel mixture of 85 gallons of ethanol and 15 gallons of gasoline is an oxygenated fuel, while a fuel mixture of 15 gallons of ethanol

and 85 gallons of gasoline is not an oxygenated fuel.

(4) The standards and requirements of subpart S of this part applicable to heavy-duty vehicles under 14,000 pounds GVWR apply to all heavy-duty vehicles powered solely by electricity, including plug-in electric vehicles and solar-powered vehicles. Use good engineering judgment to apply these requirements to these vehicles, including applying these provisions to vehicles over 14,000 pounds GVWR. Electric heavy-duty vehicles may not generate NO_X or PM emission credits. Heavy-duty vehicles powered solely by electricity are deemed to have zero emissions of regulated pollutants.

(5) The standards and requirements of this part applicable to diesel-fueled heavy-duty vehicles and engines apply to all other heavy-duty vehicles and engines not otherwise addressed in this paragraph (d).

(6) See 40 CFR parts 1036 and 1037 for requirements related to greenhouse gas emissions.

(7) Manufacturers may voluntarily certify to the standards of paragraphs (d)(3) through (5) of this section before model year 2016. Note that other provisions in this part require compliance with the standards described in paragraphs (d)(1) and (2) of this section for model years before 2016.

(e) *Small volume manufacturers.* Special certification procedures are available for any manufacturer whose projected combined U.S. sales of light-duty vehicles, light-duty trucks, heavy-duty vehicles, and heavy-duty engines in its product line (including all vehicles and engines imported under the provisions of 40 CFR 85.1505 and 85.1509) are fewer than 10,000 units for the model year in which the manufacturer seeks certification. To certify its product line under these optional procedures, the small-volume manufacturer must first obtain the Administrator's approval. The manufacturer must meet the eligibility criteria specified in § 86.098–14(b) before the Administrator's approval will be granted. The small-volume manufacturer's certification procedures are described in § 86.098–14.

(f) *Optional procedures for determining exhaust opacity.* (1) The provisions of subpart I of this part apply to tests which are performed by the Administrator, and optionally, by the manufacturer.

(2) Measurement procedures, other than those described in subpart I of this part, may be used by the manufacturer provided the manufacturer satisfies the requirements of § 86.007–23(f).

(3) When a manufacturer chooses to use an alternative measurement procedure, it has the responsibility to determine whether the results obtained by the procedure will correlate with the results which would be obtained from the measurement procedure in subpart I of this part. Consequently, the Administrator will not routinely approve or disapprove any alternative opacity measurement procedure or any associated correlation data which the manufacturer elects to use to satisfy the data requirements for subpart I of this part.

(4) If a confirmatory test is performed and the results indicate there is a systematic problem suggesting that the data generated under an optional alternative measurement procedure do not adequately correlate with data obtained in accordance with the procedures described in subpart I of this part, EPA may require that all certificates of conformity not already issued be based on data obtained from procedures described in subpart I of this part.

(g) *Clean alternative fuel conversions.* The provisions of this subpart also apply for clean alternative fuel conversions as defined in 40 CFR 85.502 of all vehicles described in paragraph (a) of this section.

(h) *Turbine engines.* Turbine engines are deemed to be compression-ignition engines for purposes of this part.

[76 FR 57375, Sept. 15, 2011, as amended at 79 FR 23690, Apr. 28, 2014; 81 FR 73975, Oct. 25, 2016]

§ 86.078–3 Abbreviations.

The abbreviations in this section apply to this subpart and also to subparts B, D, H, I, J, N, O and P of this part and have the following meanings:

accel.—acceleration.

AECD—Auxiliary emission control device.

API—American Petroleum Institute.

ASTM—American Society for Testing and Materials.
BHP—Brake horsepower.
BSCO—Brake specific carbon monoxide.
BSHC—Brake specific hydrocarbons.
$BSNO_X$—Brake specific oxides of nitrogen.
C—Celsius.
cfh—cubic feet per hour.
CFV—Critical flow venturi.
CFV-CVS—Critical flow venturi—constant volume sampler.
CH_4 methane.
CL—Chemiluminescence.
CO_2—carbon dioxide.
CO—Carbon monoxide.
conc.—concentration.
cfm—cubic feet per minute.
CT—Closed throttle.
cu. in.—cubic inch(es).
CVS—Constant volume sampler.
decel.—deceleration.
EP—End point.
evap.—evaporative.
F—Fahrenheit.
FID—Flame ionization detector.
FL—Full load.
ft.—feet.
g—gram(s).
gal.—U.S. gallon(s).
GVW—Gross vehicle weight.
GVWR—Gross vehicle weight rating.
h—hour(s).
H_2O—water.
HC—hydrocarbon(s).
HFID—Heated flame ionization detector.
Hg—mercury.
hi—high.
hp.—horsepower.
IBP—Initial boiling point.
ID—Internal diameter.
in.—inch(es).
K—kelvin.
kg—kilogram(s).
km—kilometer(s).
kPa—kilopascal(s).
lb.—pound(s).
lb.-ft.—pound-feet.
m—meter(s).
max.—maximum.
mg—milligram(s).
mi.—mile(s).
min.—minute(s).
ml—milliliter(s).
mm—millimeter(s).
mph—miles per hour.
mv—millivolt(s).
N_2—nitrogen.
NDIR—Nondispersive infrared.
NO—nitric oxide.
NO_2—nitrogen dioxide.
N_2O nitrous oxide.
NO_X—oxides of nitrogen.
No.—Number.
O_2—oxygen.
Pb—lead.
pct.—percent.
PDP-CVS—Positive displacement pump—constant volume sampler.
ppm—parts per million by volume.
ppm C—parts per million, carbon.
psi—pounds per square inch.
psig—pounds per square inch gauge.
PTA—Part throttle acceleration.
PTD—Part throttle deceleration.
R—Rankin.
rpm—revolutions per minute.
RVP—Reid vapor pressure.
s—second(s).
SAE—Society of Automotive Engineers.
SI—International system of units.
sp.—speed.
TEL—Tetraethyl lead.
TML—Tetramethyl lead.
UDDS—Urban dynamometer driving schedule.
V—volt(s).
vs—versus.
W—watt(s).
WF—Weighting factor.
WOT—Wide open throttle.
wt.—weight.
′—feet.
″—inch(es).
°—degree(s).
Σ—summation.

[42 FR 32907, June 28, 1977, as amended at 45 FR 4149, Jan. 21, 1980; 74 FR 56373, Oct. 30, 2009]

§ 86.078–6 Hearings on certification.

If a manufacturer's request for a hearing is approved, EPA will follow the hearing procedures specified in 40 CFR part 1068, subpart G.

[81 FR 73975, Oct. 25, 2016]

§ 86.079–31 Separate certification.

Where possible a manufacturer should include in a single application for certification all vehicles (or engines) for which certification is required. A manufacturer may, however, choose to apply separately for certification of part of his product line. The selection of test vehicles (or test engines) and the computation of test results will be determined separately for each application.

[42 FR 45149, Sept. 8, 1977]

§ 86.079–32 Addition of a vehicle or engine after certification.

(a) If a manufacturer proposes to add to his product line a vehicle (or engine) of the same engine-system combination as vehicles (or engines) previously certified but which was not described in the application for certification

when the test vehicle(s) (or test engine(s)) representing other vehicles (or engines) of that combination was certified, he shall notify the Administrator. Such notification shall be in advance of the addition unless the manufacturer elects to follow the procedure described in § 86.079–34. This notification shall include a full description of the vehicle (or engine) to be added.

(b) The Administrator may require the manufacturer to perform such tests on the test vehicle(s) (or test engine(s)) representing the vehicle (or engine) to be added which would have been required if the vehicle (or engine) had been included in the original application for certification.

(c) If, after a review of the test reports and data submitted by the manufacturer, and data derived from any testing conducted under § 86.079–29, the Administrator determines that the test vehicle(s) or test engine(s) meets all applicable standards, the appropriate certificate will be amended accordingly. If the Administrator determines that the test vehicle(s) (or test engine(s)) does not meet applicable standards, he will proceed under § 86.079–30(b).

[42 FR 45149, Sept. 8, 1977]

§ 86.079–33 Changes to a vehicle or engine covered by certification.

(a) The manufacturer shall notify the Administrator of any change in production vehicles (or production engines) in respect to any of the parameters listed in § 86.079–24(a)(3), § 86.079–24(b)(1)(iii), § 86.079–24(b)(2) (iii) or § 86.079–24(b)(3)(iii) as applicable, giving a full description of the change. Such notification shall be in advance of the change unless the manufacturer elects to follow the procedure described in § 86.079–34.

(b) Based upon the description of the change, and data derived from such testing as the Administrator may require or conduct. The Administrator will determine whether the vehicle (or engine), as modified, would still be covered by the certificate of conformity then in effect.

(c) If the Administrator determines that the outstanding certificate would cover the modified vehicles (or engines) he will notify the manufacturer in writing. Except as provided in § 86.079–34 the change may not be put into effect prior to the manufacturer's receiving this notification. If the Administrator determines that the modified vehicles (or engines) would not be covered by the certificate then in effect, the modified vehicles (or engines) shall be treated as additions to the product line subject to § 86.079–32.

[42 FR 45149, Sept. 8, 1977]

§ 86.079–39 Submission of maintenance instructions.

(a) The manufacturer shall provide to the Administrator, no later than the time of the submission required by § 86.079–23, a copy of the maintenance instructions which the manufacturer proposes to supply to the ultimate purchaser in accordance with § 86.079–38(a). The Administrator will review such instructions to determine whether they are reasonable and necessary to assure the proper functioning of the vehicle's (or engine's) emission control systems. The Administrator will notify the manufacturer of his determination whether such instructions are reasonable and necessary to assure the proper functioning of the emission control systems.

(b) Any revision to the maintenance instructions which will affect emissions shall be supplied to the Administrator at least 30 days before being supplied to the ultimate purchaser unless the Administrator consents to a lesser period of time.

[42 FR 45151, Sept. 8, 1977]

§ 86.080–12 Alternative certification procedures.

(a)(1) The Administrator will determine which of the following certification procedures (paragraph (a)(3) or (a)(4) of this section) may be used to demonstrate compliance for each heavy-duty engine, light-duty vehicle, and light-duty truck engine family for which certification is sought.

(2) The families selected for the procedure described in paragraph (a)(3) of this section will be subject to this procedure at the option of the manufacturer.

(3) The following provisions apply to those heavy-duty engine, light-duty vehicle, and light-duty truck engine families which the Administrator has specified may be subject to the abbreviated certification review procedure.

(i) The manufacturer shall satisfy all applicable requirements of part 86 necessary to demonstrate compliance with the applicable standards for each class of new motor vehicles or new motor vehicle engines for which certification is sought.

(ii) As specifically allowed by the Administrator, the manufacturer shall assume the responsibility for part or all of the decisions applicable to the family for which certification is sought and which are within the jurisdiction of the Administrator, with the exception that the Administrator will determine whether a test vehicle, or test engine, has met the applicable emission standards.

(iii) The manufacturer shall maintain, update, and correct all records and information required.

(iv) The Administrator may review a manufacturer's records at any time. At the Administrator's discretion, this review may take place either at the manufacturer's facility or at another facility designated by the Administrator.

(v) At the Administrator's request, the manufacturer shall notify the Administrator of the status of the certification program including projected schedules of those significant accomplishments specified by the Administrator.

(vi) The manufacturer shall permit the Administrator to inspect any facilities, records, and vehicles from which data are obtained under the abbreviated certification review procedure.

(vii) Upon completing all applicable requirements of part 86, the manufacturer shall submit a separate application for a certificate of conformity for each set of standards and each class of new motor vehicles or new motor vehicle engines for which certification is sought. Such application shall be made in writing to the Administrator by the manufacturer.

(A) The Administrator may approve or disapprove, in whole or in part, an application for certification according to the procedures specified in § 86.080–22(b).

(B) If, after a review of the application for certification, test reports and data submitted by the manufacturer, data obtained during an inspection, and any other pertinent data or information, the Administrator determines that a test vehicle(s) or test engine(s) has not met the requirements of the Act and the applicable subpart, he will notify the manufacturer in writing and set forth the reason(s) for the determination as specified in § 86.080–22(c).

(4) Those families which are to be subjected to the complete EPA review procedure will follow the procedures specified in this subpart with the exception of § 86.080–12(a)(3).

(b) The manufacturer may request that an engine family be subject to the abbreviated certification review procedure.

(c) The Administrator may require that an engine family previously allowed to be subject to the abbreviated certification review procedure be transferred to the complete review procedure.

[45 FR 26045, Apr. 17, 1980]

§ 86.082–2 Definitions.

(a) The definitions of this section apply to this subpart and also to subparts B, D, I, and R of this part.

(b) As used in this subpart, all terms not defined herein shall have the meaning given them in the Act:

Accuracy means the difference between a measurement and true value.

Act means part A of title II of the Clean Air Act, 42 U.S.C. as amended, 7521, *et seq*.

Administrator means the Administrator of the Environmental Protection Agency or his authorized representative.

Auxiliary Emission Control Device (AECD) means any element of design which senses temperature, vehicle speed, engine RPM, transmission gear, manifold vacuum, or any other parameter for the purpose of activating, modulating, delaying, or deactivating the operation of any part of the emission control system.

Basic engine means a unique combination of manufacturer, engine displacement, number of cylinders, fuel system

(as distinguished by number of carburetor barrels or use of fuel injection), catalyst usage, and other engine and emission control system characteristics specified by the Administrator.

Basic vehicle frontal area means the area enclosed by the geometric projection of the basic vehicle along the longitudinal axis, which includes tires but excludes mirrors and air deflectors, onto a plane perpendicular to the longitudinal axis of the vehicle.

Body style means a level of commonality in vehicle construction as defined by number of doors and roof treatment (e.g., sedan, convertible, fastback, hatchback).

Body type means a name denoting a group of vehicles that are either in the same car line or in different car lines provided the only reason the vehicles qualify to be considered in different car lines is that they are produced by a separate division of a single manufacturer.

Calibrating gas means a gas of known concentration which is used to establish the response curve of an analyzer.

Calibration means the set of specifications, including tolerances, unique to a particular design, version, or application of a component or components assembly capable of functionally describing its operation over its working range.

Car line means a name denoting a group of vehicles within a make or car division which has a degree of commonality in construction (e.g., body, chassis). Car line does not consider any level of decor or opulence and is not generally distinguished by characteristics as roofline, number of doors, seats, or windows except for station wagons or light-duty trucks. Station wagons and light-duty trucks are considered to be different car lines than passenger cars.

Configuration means a subclassification of an engine-system combination on the basis of engine code, inertia weight class, transmission type and gear ratios, final drive ratio, and other parameters which may be designated by the Administrator.

Crankcase emissions means airborne substances emitted to the atmosphere from any portion of the engine crankcase ventilation or lubrication systems.

Curb-idle for manual transmission code heavy-duty engines means the manufacturer's recommended engine speed with the transmission in neutral or with the clutch disengaged. For automatic transmission code heavy-duty engines, curb-idle means the manufacturer's recommended engine speed with the automatic transmission in gear and the output shaft stalled.

Defeat Device means an AECD that reduces the effectiveness of the emission control system under conditions which may reasonably be expected to be encountered in normal urban vehicle operation and use, unless (1) such conditions are substantially included in the Federal emission test procedure, (2) the need for the AECD is justified in terms of protecting the vehicle against damage or accident, or (3) the AECD does not go beyond the requirements of engine starting.

Diurnal breathing losses means evaporative emissions as a result of the daily range in temperature.

Drive train configuration means a unique combination of engine code, transmission configuration, and axle ratio.

Dynamometer-idle for automatic transmission code heavy-duty engines means the manufacturer's recommended engine speed without a transmission that simulates the recommended engine speed with a transmission and with the transmission in neutral.

Engine code means a unique combination, within an engine-system combination, of displacement, carburetor (or fuel injection) calibration, choke calibration, distributor calibration, auxiliary emission control devices, and other engine and emission control system components specified by the Administrator.

Engine family means the basic classification unit of a manufacturer's product line used for the purpose of test fleet selection and determined in accordance with § 86.082–24.

Engine family group means a combination of engine families for the purpose of determining a minimum deterioration factor under the Alternative Durability Program.

Engine-system combination means an engine family-exhaust emission control system combination.

EPA Enforcement Officer means any officer or employee of the Environmental Protection Agency so designated in writing by the Administrator (or by his designee).

Evaporative emission code means a unique combination, in an evaporative emission family-evaporative emission control system combination, of purge system calibrations, fuel tank and carburetor bowl vent calibrations and other fuel system and evaporative emission control system components and calibrations specified by the Administrator.

Evaporative emissions means hydrocarbons emitted into the atmosphere from a motor vehicle, other than exhaust and crankcase emissions.

Evaporative vehicle configuration means a unique combination of basic engine, engine code, body type, and evaporative emission code.

Exhaust emissions means substances emitted to the atmosphere from any opening downstream from the exhaust port of a motor vehicle engine.

Fuel evaporative emissions means vaporized fuel emitted into the atmosphere from the fuel system of a motor vehicle.

Fuel system means the combination of fuel tank(s), fuel pump, fuel lines, and carburetor or fuel injection components, and includes all fuel system vents and fuel evaporative emission control system components.

Gross vehicle weight means the manufacturer's gross weight rating for the individual vehicle.

Gross vehicle weight rating (GVWR) means the value specified by the manufacturer as the maximum design loaded weight of a single vehicle.

Hang-up refers to the process of hydrocarbon molecules being adsorbed, condensed, or by any other method removed from the sample flow prior to reaching the instrument detector. It also refers to any subsequent desorption of the molecules into the sample flow when they are assumed to be absent.

Heavy-duty engine means any engine which the engine manufacturer could reasonably expect to be used for motive power in a heavy-duty vehicle.

Heavy-duty vehicle means any motor vehicle rated at more than 8,500 pounds GVWR or that has a vehicle curb weight of more than 6,000 pounds or that has a basic vehicle frontal area in excess of 45 square feet.

High altitude means any elevation over 1,219 meters (4,000 feet).

High-altitude conditions means a test altitude of 1,620 meters (5,315 feet), plus or minus 100 meters (328 feet), or equivalent observed barometric test conditions of 83.3 ±1 kilopascals.

High-altitude reference point means an elevation of 1,620 meters (5,315 feet) plus or minus 100 meters (328 feet), or equivalent observed barometric test conditions of 83.3 kPa (24.2 inches Hg), plus or minus 1 kPa (0.30 Hg).

Hot-soak losses means evaporative emissions after termination of engine operation.

Incomplete truck means any truck which does not have the primary load carrying device or container attached.

Inertia weight class means the class, which is a group of test weights, into which a vehicle is grouped based on its loaded vehicle weight in accordance with the provisions of part 86.

Intermediate speed means peak torque speed if peak torque speed occurs between 60 and 75 percent of rated speed. If the peak torque speed is less than 60 percent of rated speed, intermediate speed means 60 percent of rated speed. If the peak torque speed is greater than 75 percent of rated speed, intermediate speed means 75 percent of rated speed.

Light-duty truck means any motor vehicle rated at 8,500 pounds GVWR or less which as a vehicle curb weight of 6,000 pounds or less and which has a basic vehicle frontal area of 45 square feet or less, which is:

(1) Designed primarily for purposes of transportation of property or is a derivation of such a vehicle, or

(2) Designed primarily for transportation of persons and has a capacity of more than 12 persons, or

(3) Available with special features enabling off-street or off-highway operation and use.

Light-duty vehicle means a passenger car or passenger car derivative capable of seating 12 passengers or less.

Loaded vehicle weight means the vehicle curb weight plus 300 pounds.

Low altitude means any elevation equal to or less than 1,219 meters (4,000 feet).

Low altitude conditions means a test altitude less than 549 meters (1,800 feet).

Malfunction means not operating according to specifications (e.g., those specifications listed in the application for certification).

Maximum rated horsepower means the maximum brake horsepower output of an engine as stated by the manufacturer in his sales and service literature and his application for certification under § 86.082–21.

Maximum rated torque means the maximum torque produced by an engine as stated by the manufacturer in his sales and service literature and his application for certification under § 86.082–21.

Military engine means any engine manufactured solely for the Department of Defense to meet military specifications.

Model means a specific combination of car line, body style, and drivetrain configuration.

Model type means a unique combination of car line, basic engine, and transmission class.

Model year means the manufacturer's annual production period (as determined by the Administrator) which includes January 1 of such calendar year: *Provided*, That if the manufacturer has no annual production period, the term *model year* shall mean the calendar year.

Nominal fuel tank capacity means the volume of the fuel tank(s), specified by the manufacturer to the nearest tenth of a U.S. gallon, which may be filled with fuel from the fuel tank filler inlet.

Opacity means the fraction of a beam of light, expressed in percent, which fails to penetrate a plume of smoke.

Option means any available equipment or feature not standard equipment on a model.

Oxides of nitrogen means the sum of the nitric oxide and nitrogen dioxide contained in a gas sample as if the nitric oxide were in the form of nitrogen dioxide.

Peak torque speed means the speed at which an engine develops maximum torque.

Percent load means the fraction of the maximum available torque at a specified engine speed.

Precision means the standard deviation of replicated measurements.

Rated speed means the speed at which the manufacturer specifies the maximum rated horsepower of an engine.

Reconfigured emission-data vehicle means an emission-data vehicle obtained by modifying a previously used emission-data vehicle to represent another emission-data vehicle.

Round has the meaning given in 40 CFR 1065.1001, unless otherwise specified.

Running loss means fuel evaporative emissions resulting from an average trip in an urban area or the simulation of such a trip.

Scheduled maintenance means any adjustment, repair, removal, disassembly, cleaning, or replacement of vehicle components or systems which is performed on a periodic basis to prevent part failure or vehicle (if the engine were installed in a vehicle) malfunction.

Smoke means the matter in the exhaust emission which obscures the transmission of light.

Span gas means a gas of known concentration which is used routinely to set the output level of an analyzer.

Standard equipment means those features or equipment which are marketed on a vehicle over which the purchaser can exercise no choice.

System includes any motor vehicle engine modification which controls or causes the reduction of substances emitted from motor vehicles.

Tank fuel volume means the volume of fuel in the fuel tank(s), which is determined by taking the manufacturer's nominal fuel tank(s) capacity and multiplying by 0.40, the result being rounded using ASTM E 29–67 to the nearest tenth of a U.S. gallon.

Test weight means the weight, within an inertia weight class, which is used in the dynamometer testing of a vehicle, and which is based on its loaded vehicle weight in accordance with the provisions of part 86.

Throttle means the mechanical linkage which either directly or indirectly controls the fuel flow to the engine.

Transmission class means the basic type of transmission, e.g., manual, automatic, semiautomatic.

Transmission configuration means a unique combination, within a transmission class, of the number of the forward gears and, if applicable, overdrive. The Administrator may further subdivide a transmission configuration (based on such criteria as gear ratios, torque convertor multiplication ratio, stall speed and shift calibration, etc.), if he determines that significant fuel economy or exhaust emission differences exist within that transmission configuration.

United States has the meaning given in 40 CFR 1068.30.

Unscheduled maintenance means any adjustment, repair, removal, disassembly, cleaning, or replacement of vehicle components or systems which is performed to correct a part failure or vehicle (if the engine were installed in a vehicle) malfunction.

Useful life means:

(1) For light-duty vehicles and light-duty trucks a period of use of 5 years or 50,000 miles, whichever first occurs.

(2) For gasoline-fueled heavy-duty engines a period of use of 5 years or 50,000 miles of vehicle operation or 1,500 hours of engine operation (or an equivalent period of 1,500 hours of dynamometer operation), whichever first occurs.

(3) For diesel heavy-duty engines a period of use of 5 years or 100,000 miles of vehicle operation or 3,000 hours of engine operation (or an equivalent period of 1,000 hours of dynamometer operation), whichever first occurs.

Van means a light-duty truck having an integral enclosure, fully enclosing the driver compartment and load carrying device, and having no body sections protruding more than 30 inches ahead of the leading edge of the windshield.

Vehicle configuration means a unique combination of basic engine, engine code, inertia weight class, transmission configuration, and axle ratio.

Vehicle curb weight means the actual or the manufacturer's estimated weight of the vehicle in operational status with all standard equipment, and weight of fuel at nominal tank capacity, and the weight of optional equipment computed in accordance with § 86.082–24; incomplete light-duty trucks shall have the curb weight specified by the manufacturer.

Zero (0) hours means that point after normal assembly line operations and adjustments are completed and before ten (10) additional operating hours have been accumulated, including emission testing, if performed.

Zero (0) miles means that point after initial engine starting (not to exceed 100 miles of vehicle operation, or three hours of engine operation) at which normal assembly line operations and adjustments are completed, and including emission testing, if performed.

[46 FR 50475, Oct. 13, 1981, as amended at 47 FR 49807, 49808, Nov. 2, 1982; 62 FR 31233, June 6, 1997; 79 FR 23690, Apr. 28, 2014]

§ 86.082–34 Alternative procedure for notification of additions and changes.

(a) A manufacturer may, in lieu of notifying the Administrator in advance of an addition of a vehicle (or engine) under § 86.079–32 or a change in a vehicle (or engine) under § 86.079–33, notify the Administrator concurrently with making an addition of a vehicle or a change in a vehicle, if the manufacturer determines that following the change all vehicles (or engines) effected by the addition or change will still meet the applicable emission standards. Such notification shall include a full description of the addition or change and any supporting documentation the manufacturer may desire to include to support the manufacturer's determination. The manufacturer's determination that the addition or change does not cause noncompliance shall be based on an engineering evaluation of the addition or change and/or testing.

(b) The Administrator may require that additional emission testing be performed to support the manufacturers original determination submitted in paragraph (a) of this section. If additional testing is required the Administrator shall proceed as in § 86.079–32 (b) and (c) or § 86.079–33 (b) and (c) as appropriate. Additional test data, if requested, must be provided within 30

days of the request or the manufacturer must rescind the addition or change immediately. The Administrator may grant additional time to complete testing. If based on this additional testing or any other information, the Administrator determines that the vehicles effected by the addition or change do not meet the applicable standards the Administrator will notify the manufacturer to rescind the addition or change immediately upon receipt of the notification.

(c) Election to produce vehicles (or engines) under this section will be deemed to be a consent to recall all vehicles (or engines) which the Administrator determines under § 86.079–32(c) do not meet applicable standards, and to cause such nonconformity to be remedied at no expense to the owner.

[46 FR 50486, Oct. 13, 1981, as amended at47 FR 49807, Nov. 2, 1982]

§ 86.084–2 Definitions.

The definitions in § 86.082–2 remain effective. The definitions listed in this section apply beginning with the 1984 model year.

Approach angle means the smallest angle in a plan side view of an automobile, formed by the level surface on which the automobile is standing and a line tangent to the front tire static loaded radius arc and touching the underside of the automobile forward of the front tire.

Axle clearance means the vertical distance from the level surface on which an automobile is standing to the lowest point on the axle differential of the automobile.

Breakover angle means the supplement of the largest angle, in the plan side view of an automobile, that can be formed by two lines tangent to the front and rear static loaded radii arcs and intersecting at a point on the underside of the automobile.

Curb-idle means:

(1) For manual transmission code light-duty trucks, the engine speed with the transmission in neutral or with the clutch disengaged and with the air conditioning system, if present, turned off. For automatic transmission code light-duty trucks, curb-idle means the engine speed with the automatic transmission in the Park position (or Neutral position if there is no Park position), and with the air conditioning system, if present, turned off.

(2) For manual transmission code heavy-duty engines, the manufacturer's recommended engine speed with the clutch disengaged. For automatic transmission code heavy-duty engines, curb idle means the manufacturer's recommended engine speed with the automatic transmission in gear and the output shaft stalled. (Measured idle speed may be used in lieu of curb-idle speed for the emission tests when the difference between measured idle speed and curb idle speed is sufficient to cause a void test under 40 CFR 1065.530 but not sufficient to permit adjustment in accordance with 40 CFR part 1065, subpart E.

Departure angle means the smallest angle, in a plan side view of an automobile, formed by the level surface on which the automobile is standing and a line tangent to the rear tire static loaded radius arc and touching the underside of the automobile rearward of the rear tire.

Emission-related maintenance means that maintenance which does substantially affect emissions or which is likely to affect the deterioration of the vehicle or engine with respect to emissions, even if the maintenance is performed at some time other than that which is recommended.

Heavy-passenger cars means, for the 1984 model year only, a passenger car or passenger car derivative capable of seating 12 passengers or less, rated at 6,000 pounds GVW or more and having an equivalent test weight of 5,000 pounds or more.

Non-emission related maintenance means that maintenance which does not substantially affect emissions and which does not have a lasting effect on the deterioration of the vehicle or engine with respect to emissions once the maintenance is performed at any particular date.

Scheduled maintenance means any adjustment, repair, removal, disassembly, cleaning, or replacement of vehicle components or systems which is performed on a periodic basis to prevent part failure or vehicle (if the engine were installed in a vehicle) malfunction, or anticipated as necessary to

correct an overt indication of vehicle malfunction or failure for which periodic maintenance is not appropriate.

Special features enabling off-street or off-highway operation and use means a vehicle:

(1) That has 4-wheel drive; and

(2) That has at least four of the following characteristics calculated when the automobile is at curb weight, on a level surface, with the front wheels parallel to the vehicle's longitudinal centerline, and the tires inflated to the manufacturer's recommended pressure;

(i) Approach angle of not less than 28 degrees.

(ii) Breakover angle of not less than 14 degrees.

(iii) Departure angle of not less than 20 degrees.

(iv) Running clearance of not less than 8 inches.

(v) Front and rear axle clearances of not less than 7 inches each.

Static loaded radius arc means a portion of a circle whose center is the center of a standard tire-rim combination of an automobile and whose radius is the distance from that center to the level surface on which the automobile is standing, measured with the automobile at curb weight, the wheel parallel to the vehicle's longitudinal centerline, and the tire inflated to the manufacturer's recommended pressure.

Unscheduled maintenance means any adjustment, repair, removal disassembly, cleaning, or replacement of vehicle components or systems which is performed to correct a part failure or vehicle (if the engine were installed in a vehicle) malfunction which was not anticipated.

Useful life means:

(a) For light-duty vehicles a period of use of 5 years or 50,000 miles, whichever first occurs.

(b)(1) For a light-duty truck engine family or heavy-duty engine family, the average period of use up to engine retirement or rebuild, whichever occurs first, as determined by the manufacturer under § 86.084–21(b)(4)(ii)(B).

(2) For a specific light-duty truck or heavy-duty engine, the period of use represented by the first occurring of the following:

(i) The engine reaches the point of needing to be rebuilt, according to the criteria established by the manufacturer under § 86.084–21(b)(4)(ii)(C), or

(ii) The engine reaches its engine family's useful life.

(3) If the useful life of a specific light-duty truck or heavy-duty engine is found to be less than 5 years or 50,000 miles (or the equivalent), the useful life shall be a period of use of 5 years or 50,000 miles (or the equivalent), whichever occurs first, as required by section 202(d)(2) of the Act.

(4) For purpose of identification this option shall be known as the average useful-life period.

(c)(1) As an option for a light-duty truck engine family, a period of use of 12 years or 130,000 miles, whichever occurs first.

(2) As an option for a gasoline heavy-duty engine family, a period of use of 10 years or 120,000 miles, whichever occurs first.

(3) As an option for a diesel heavy-duty engine family, a period of use of 10 years or 120,000 miles, whichever occurs first, for engines certified for use in vehicles of less than 19,500 pounds GVWR; a period of use of 10 years or 200,000 miles, whichever occurs first, for engines certified for use in vehicles of 19,501–26,000 pounds GVWR; or, a period of use of 10 years or 275,000 miles, whichever occurs first, for engines certified for use in vehicles whose GVWR exceeds 26,000 pounds.

(4) As an option for both light-duty truck and heavy-duty engine families, an alternate full-life value assigned by the Administrator under § 86.084–21(b)(4)(ii)(B)(*4*).

(5) For purpose of identification these options shall be known as the assigned useful-life period options.

(6) For those light-duty truck and heavy-duty engine families using the assigned useful-life period options, the warranty period for emissions defect warranty and emissions performance warranty shall be 5 years/50,000 miles for light-duty trucks, 5 years/50,000 miles for gasoline heavy-duty engines and for diesel heavy-duty engines certified for use in vehicle of less than 19,501 lbs. GVWR, and 5 years/100,000 miles for all other diesel heavy-duty engines. However, in no case may this period be less than the basic mechanical warranty period.

(7) The assigned useful-life period options, as detailed in paragraphs (c)(1) through (c)(6) of this section, are applicable for the 1984 model year only.

(d)(1) As an option for the 1984 model year and for the 1984 model year only, the useful life of light-duty trucks and heavy-duty engine families may be defined as prescribed in § 86.077–2.

(2) For purpose of identification this option shall be known as the half-life useful-life option.

[45 FR 63747, Sept. 25, 1980, as amended at 47 FR 49811, Nov. 2, 1982; 48 FR 1412, Jan. 12, 1983; 48 FR 48607, Oct. 19, 1983; 49 FR 48136, Dec. 10, 1984; 70 FR 40433, July 13, 2005]

§ 86.084–4 Section numbering; construction.

(a) The model year of initial applicability is indicated by the last two digits of the 5-digit group. A section remains in effect for subsequent model years until it is superseded. The number following the hyphen designates what previous section is replaced by a future regulation. For example, § 86.005–1 applies to model year 2005 and later vehicles and engines until it is superseded. Section 86.016–1 takes effect with model year 2016 and continues to apply until it is superseded; § 86.005–1 no longer applies starting with model year 2016, except as specified by § 86.016–1.

(b) If a regulation in this subpart references a section that has been superseded or no longer exists, this should be understood as a reference to the same section for the appropriate model year. For example, if a regulation in this subpart refers to § 86.001–30, it should be taken as a reference to § 86.007–30 or any later version of that section that applies for the appropriate model year. However, this does not apply if the reference to a superseded section specifically states that the older provision applies instead of any updated provisions from the section in effect for the current model year; this occurs most often as part of the transition to new emission standards.

(c) Except where indicated, the language in this subpart applies to both vehicles and engines. In many instances, language referring to engines is enclosed in parentheses and immediately follows the language discussing vehicles.

[81 FR 73976, Oct. 25, 2016]

§ 86.085–2 Definitions.

The definitions of § 86.084–2 remain effective. The definitions listed in this section apply beginning with the 1985 model year.

Abnormally treated vehicle, any diesel light-duty vehicle or diesel light-duty truck that is operated for less than five miles in a 30 day period immediately prior to conducting a particulate emissions test.

Composite particulate standard, for a manufacturer which elects to average diesel light-duty vehicles and diesel light-duty trucks together in the particulate averaging program, means that standard calculated according to the following equation and rounded to the nearest hundredth gram-per-mile:

$$\frac{(\mathrm{PROD_{LDV}})(\mathrm{STD_{LDV}})+(\mathrm{PROD_{LDT}})(\mathrm{STD_{LDT}})}{(\mathrm{PROD_{LDV}})+(\mathrm{PROD_{LDT}})} = \text{Manufacturer composite particulate standard}$$

Where:

$\mathrm{PROD_{LDV}}$ represents the manufacturer's total diesel light-duty vehicle production for those engine families being included in the average for a given model year.

$\mathrm{STD_{LDV}}$ represents the light-duty vehicle particulate standard.

$\mathrm{PROD_{LDT}}$ represents the manufacturer's total diesel light-duty truck production for those engine families being included in the average for a given model year.

$\mathrm{STD_{LDT}}$ represents the light-duty truck particulate standard.

Family particulate emission limit means the diesel particulate emission level to which an engine family is certified in the particulate averaging program, expressed to an accuracy of one hundredth gram-per-mile.

Production-weighted average means the manufacturer's production-weighted average particulate emission level, for certification purposes, of all of its diesel engine families included in the particulate averaging program. It is calculated at the end of the model year by multiplying each family particulate emission limit by its respective production, summing these terms, and dividing the sum by the total production of the effected families. Those vehicles produced for sale in California or at high altitude shall each be averaged separately from those produced for sale in any other area.

Primary intended service class means:

(a) The primary service application group for which a heavy-duty diesel engine is designed and marketed, as determined by the manufacturer. The primary intended service classes are designated as light, medium, and heavy heavy-duty diesel engines. The determination is based on factors such as vehicle GVW, vehicle usage and operating patterns, other vehicle design characteristics, engine horsepower, and other engine design and operating characteristics.

(1) Light heavy-duty diesel engines usually are non-sleeved and not designed for rebuild; their rated horsepower generally ranges from 70 to 170. Vehicle body types in this group might include any heavy-duty vehicle built for a light-duty truck chassis, van trucks, multi-stop vans, recreational vehicles, and some single axle straight trucks. Typical applications would include personal transportation, light-load commercial hauling and delivery, passenger service, agriculture, and construction. The GVWR of these vehicles is normally less than 19,500 lbs.

(2) Medium heavy-duty diesel engines may be sleeved or non-sleeved and may be designed for rebuild. Rated horsepower generally ranges from 170 to 250. Vehicle body types in this group would typically include school buses, tandem axle straight trucks, city tractors, and a variety of special purpose vehicles such as small dump trucks, and trash compactor trucks. Typical applications would include commercial short haul and intra-city delivery and pickup. Engines in this group are normally used in vehicles whose GVWR varies from 19,500–33,000 lbs.

(3) Heavy heavy-duty diesel engines are sleeved and designed for multiple rebuilds. Their rated horsepower generally exceeds 250. Vehicles in this group are normally tractors, trucks, and buses used in inter-city, long-haul applications. These vehicles normally exceed 33,000 lbs GVWR.

Useful life means:

(a) For light-duty vehicles a period of use of 5 years or 50,000 miles, whichever first occurs.

(b) For a light-duty truck engine family, a period of use of 11 years or 120,000 miles, whichever occurs first.

(c) For a gasoline-fueled heavy-duty engine family (and in the case of evaporative emission regulations, for gasoline-fueled heavy-duty vehicles), a period of use of 8 years or 110,000 miles, whichever first occurs.

(d) For a diesel heavy-duty engine family:

(1) For light heavy-duty diesel engines, a period of use of 8 years or 110,000 miles, whichever first occurs.

(2) For medium heavy-duty diesel engines, a period of use of 8 years or 185,000 miles, whichever first occurs.

(3) For heavy heavy-duty diesel engines, a period of use of 8 years or 290,000 miles, whichever first occurs.

(e) As an option for both light-duty truck and heavy-duty engine families, an alternative useful life period assigned by the Administrator under the provisions of paragraph (f) of § 86.085–21.

(f) The useful-life period for purposes of the emissions defect warranty and emissions performance warranty shall be a period of 5 years/50,000 miles whichever first occurs, for light-duty trucks, gasoline heavy-duty engines, and light heavy-duty diesel engines. For all other heavy-duty diesel engines the aforementioned period is 5 years/100,000 miles, whichever first occurs. However, in no case may this period be less than the manufacturer's basic mechanical warranty period for the engine family.

[48 FR 33462, July 21, 1983, as amended at 48 FR 52184, Nov. 16, 1983; 52 FR 47863, Dec. 16, 1987; 79 FR 23690, Apr. 28, 2014]

§ 86.085–20 Incomplete vehicles, classification.

For purposes of this part:

(a) A heavy-duty gasoline-fueled vehicle is considered to be a complete vehicle if it has the primary load carrying device or container attached at the time the vehicle leaves the control of the manufacturer of the engine, and is considered to be an incomplete vehicle if it does not.

(b) For all other heavy-duty vehicles, a vehicle that has the primary load carrying device or container attached at the time the vehicle is introduced into U.S. commerce is considered to be a complete vehicle. Vehicles not considered to be complete vehicles are incomplete vehicles. For purposes of determining when a vehicle is introduced into U.S. commerce, an assembly of motor vehicle parts is deemed to be a vehicle if either of the following applies:

(1) A piece of equipment that is intended for self-propelled use on highways becomes a vehicle when it includes at least an engine, a transmission, and a frame. (Note: For purposes of this definition, any electrical, mechanical, and/or hydraulic devices attached to engines for the purpose of powering wheels are considered to be transmissions.)

(2) A piece of equipment that is intended for self-propelled use on highways becomes a vehicle when it includes a passenger compartment attached to a frame with axles.

[79 FR 23690, Apr. 28, 2014]

§ 86.085–37 Production vehicles and engines.

(a) Any manufacturer obtaining certification under this part shall supply to the Administrator, upon request, a reasonable number of production vehicles (or engines) selected by the Administrator which are representative of the engines, emission control systems, fuel systems, and transmission offered and typical of production models available for sale under the certificate. These vehicles (or engines) shall be supplied for testing at such time and place and for such reasonable periods as the Administrator may require. Heavy-duty engines supplied under this paragraph may be required to be mounted in chassis and appropriately equipped for operation on a chassis dynamometer.

(b) [Reserved]

(c) Any heavy-duty engine or gasoline-fueled heavy-duty vehicle manufacturer obtaining certification under this part shall notify the Administrator, on a yearly basis, of the number of engines or vehicles of such engine family-evaporative emission family-engine displacement-exhaust emission control system-fuel system combination produced for sale in the United States during the preceding year.

[48 FR 1455, Jan. 12, 1983, as amended at 59 FR 50073, Sept. 30, 1994; 62 FR 31233, June 6, 1997; 79 FR 23690, Apr. 28, 2014; 81 FR 73976, Oct. 25, 2016]

§ 86.088–2 Definitions.

The definitions in § 86.085–2 remain effective. The definitions in this section apply beginning with the 1988 model year.

Composite NO_X standard, for a manufacturer which elects to average light-duty trucks subject to the NO_X standard of § 86.088–9(a)(iii)(A) together with those subject to the NO_X standard of § 86.088–9(a)(iii)(B) in the light-duty truck NO_X averaging program, means that standard calculated according to the following equation and rounded to the nearest one-tenth gram per mile:

$$\frac{\left[\left(\mathrm{PROD_A}\right)\left(\mathrm{STD_A}\right)+\left(\mathrm{PROD_B}\right)\left(\mathrm{STD_B}\right)\right]}{\left[\left(\mathrm{PROD_A}\right)+\left(\mathrm{PROD_B}\right)\right]} = \text{Manufacturer's Composite } \mathrm{NO_x} \text{ Standard,}$$

Where:

$PROD_A$ = The manufacturer's total light-duty truck production for those engine families subject to the standard of

§ 86.088–9(a)(iii)(A) and included in the average for a given model year,

STD_A = The NO_X standard of § 86.088–9(a)(iii)(A),

$PROD_B$ = The manufacturer's total light-duty truck production for those engine families subject to the standard of § 86.088–9(a)(iii)(B) and included in the average for a given model year, and

STD_B = The NO_X standard of § 86.088–9(a)(iii)(B).

Critical emission-related components are those components which are designed primarily for emission control, or whose failure may result in a significant increase in emissions accompanied by no significant impairment (or perhaps even an improvement) in performance, driveability, and/or fuel economy as determined by the Administrator.

Critical emission-related maintenance means that maintenance to be performed on critical emission-related components.

Emission-related maintenance means that maintenance which does substantially affect emissions or which is likely to affect the emissions deterioration of the vehicle or engine during normal in-use operation, even if the maintenance is performed at some time other than that which is recommended.

Family NO_X emission limit means the NO_X emission level to which an engine family is certified in the light-duty truck NO_X averaging program, expressed to one-tenth of a gram per mile accuracy.

Non-emission-related maintenance means that maintenance which does not substantially affect emissions and which does not have a lasting effect on the emissions deterioration of the vehicle or engine during normal in-use operation once the maintenance is performed.

Production-weighted NO_X average means the manufacturer's production-weighted average NO_X emission level, for certification purposes, of all of its light-duty truck engine families included in the NO_X averaging program. It is calculated at the end of the model year by multiplying each family NO_X emission limit by its respective production, summing those terms, and dividing the sum by the total production of the effected families. Those vehicles produced for sale in California or at high altitude shall each be averaged separately from those produced for sale in any other area.

Production-weighted particulate average means the manufacturer's production-weighted average particulate emission level, for certification purposes, of all of its diesel engine families included in the particulate averaging program. It is calculated at the end of the model year by multiplying each family particulate emission limit by its respective production, summing those terms, and dividing the sum by the total production of the effected families. Those vehicles produced for sale in California or at high altitude shall each be averaged separately from those produced for sale in any other area.

(Secs. 202, 203, 206, 207, 208, 301a, Clean Air Act, as amended; 42 U.S.C. 7521, 7522, 7525, 7541, 7542, 7601a)

[50 FR 10648, Mar. 15, 1985]

§ 86.090–2 Definitions.

The definitions in § 86.088–2 remain effective. The definitions in this section apply beginning with the 1990 model year.

Averaging for heavy-duty engines means the exchange of NO_X and particulate emission credits among engine families within a given manufacturer's product line.

Averaging set means a subcategory of heavy-duty engines within which engine families can average and trade emission credits with one other.

Banking means the retention of heavy-duty engine NO_X and particulate emission credits, by the manufacturer generating the emission credits, for use in future model year certification programs as permitted by regulation.

Composite particulate standard, for a manufacturer which elects to average light-duty vehicles and light-duty trucks together in either the petroleum-fueled or methanol-fueled light-duty particulate averaging program, means that standards calculated using the following equation and rounded to the nearest one-hundredth (0.01) of a gram per mile:

$$(PROD_{LDV})\frac{(STD_{LDV})+(PROD_{LDT})}{(PROD_{LDV})+(PROD_{LDT})}(STD_{LDT}) = \text{Manufacturer composite particulate standard}$$

Where:

$PROD_{LDV}$ represents the manufacturer's total petroleum-fueled diesel or methanol-fueled diesel light-duty vehicle production for those engine families being included in the appropriate average for a given model year.

STD_{LDV} represents the light-duty vehicle particulate standard.

$PROD_{LDT}$ represents the manufacturer's total petroleum-fueled diesel or methanol-fueled diesel light-duty truck production for those engine families being included in the appropriate average for a given model year.

STD_{LDT} represents the light-duty truck particulate standard.

Dedicated vehicle (or engine) means any motor vehicle (or motor vehicle engine) engineered and designed to be operated using a single fuel. Flexible fuel vehicles and multi-fuel vehicles are not dedicated vehicles.

Diesel means type of engine with operating characteristics significantly similar to the theoretical Diesel combustion cycle. The non-use of a throttle during normal operation is indicative of a diesel engine.

Dual fuel vehicle (or engine) means any motor vehicle (or motor vehicle engine) engineered and designed to be operated on two different fuels, but not on a mixture of fuels.

Emission credits mean the amount of emission reductions or exceedances, by a heavy-duty engine family, below or above the emission standard, respectively. Emission credits below the standard are considered as ''positive credits,'' while emission credits above the standard are considered as ''negative credits.'' In addition, ''projected credits'' refer to emission credits based on the projected U.S. production volume of the engine family. ''Reserved credits'' are emission credits generated within a model year waiting to be reported to EPA at the end of the model year. ''Actual credits'' refer to emission credits based on actual U.S. production volumes as contained in the end-of-year reports submitted to EPA. Some or all of these credits may be revoked if EPA review of the end of year reports or any subsequent audit actions uncover problems or errors.

Family emission limit (FEL) means an emission level declared by the manufacturer which serves in lieu of an emission standard for certification purposes in any of the averaging, trading, or banking programs. FELs must be expressed to the same number of decimal places as the applicable emission standard. The FEL for an engine family using NO_X or particulate NCPs must equal the value of the current NO_X or particulate emission standard.

Flexible fuel vehicle (or engine) means any motor vehicle (or motor vehicle engine) engineered and designed to be operated on any mixture of two or more different fuels.

Methanol-fueled means any motor vehicle or motor vehicle engine that is engineered and designed to be operated using methanol fuel (i.e., a fuel that contains at least 50 percent methanol (CH_3OH) by volume) as fuel. Flexible fuel vehicles are methanol-fueled vehicles.

Non-oxygenated hydrocarbon means organic emissions measured by a flame ionization detector, excluding methanol.

Otto-cycle means type of engine with operating characteristics significantly similar to the theoretical Otto combustion cycle. The use of a throttle during normal operation is indicative of an Otto-cycle engine.

Primary intended service class has the meaning given in 40 CFR 1036.140.

Production weighted particulate average means the manufacturer's production-weighted average particulate emission level, for certification purposes, of all of its diesel engine families included in the light-duty particulate averaging program. It is calculated at the end of the model year by multiplying each family particulate emission limit by its respective production, summing those terms, and dividing the sum by the total production of the effected families. Those vehicles

produced for sale in California or at high altitude shall each be averaged separately from those produced for sale in any other area.

Throttle means a device used to control an engine's power output by limiting the amount of air entering the combustion chamber.

Total hydrocarbon equivalent means the sum of the carbon mass emissions of non-oxygenated hydrocarbons, methanol, formaldehyde or other organic compounds that are separately measured, expressed as gasoline-fueled vehicle hydrocarbons. In the case of exhaust emissions, the hydrogen-to-carbon ratio of the equivalent hydrocarbon is 1.85:1. In the case of diurnal and hot soak emissions, the hydrogen-to-carbon ratios of the equivalent hydrocarbons are 2.33:1 and 2.2:1, respectively.

Trading means the exchange of heavy-duty engine NO_X or particulate emission credits between manufacturers.

Useful life means:

(a) For light-duty vehicles a period of use of 5 years or 50,000 miles, whichever first occurs.

(b) For a light-duty truck engine family, a period of use of 11 years or 120,000 miles, whichever occurs first.

(c) For an Otto-cycle heavy-duty engine family, a period of use of 8 years of 110,000 miles, whichever first occurs.

(d) For a diesel heavy-duty engine family:

(1) For light heavy-duty diesel engines, period of use of 8 years or 110,000 miles, whichever first occurs.

(2) For medium heavy-duty diesel engines, a period of use of 8 years or 185,000 miles, whichever first occurs.

(3) For heavy heavy-duty diesel engines, a period of use of 8 years or 290,000 miles, whichever first occurs.

(e) As an option for both light-duty truck and heavy-duty engine families, an alternative useful life period assigned by the Administrator under the provisions of paragraph (f) of § 86.090–21.

(f) The useful-life period for purposes of the emissions defect warranty and emissions performance warranty shall be a period of 5 years/50,000 miles whichever first occurs, for light-duty trucks, Otto cycle heavy-duty engines and light heavy-duty diesel engines. For all other heavy-duty diesel engines the aforementioned period is 5 years/100,000 miles, whichever first occurs. However, in no case may this period be less than the manufacturer's basic mechanical warranty period for the engine family.

[55 FR 30612, July 26, 1990, as amended at 60 FR 34334, June 30, 1995; 62 FR 31233, June 6, 1997; 76 FR 57376, Sept. 15, 2011]

§ 86.090–3 Abbreviations.

(a) The abbreviations in § 86.078–3 remain effective. The abbreviations in this section apply beginning with the 1990 model year.

(b) The abbreviations in this section apply to this subpart, and also to subparts B, E, F, M, N, and P of this part, and have the following meanings:

DNPH—2,4-dinitrophenylhydrazine.
FEL—Family emission limit.
GC—Gas chromatograph.
HPLC—High-pressure liquid chromatography.
MeOH—Methanol (CH_3OH).
Mg—Megagram(s) (1 million grams)
MJ—Megajoule(s) (1 million joules)
THCE—Total Hydrocarbon Equivalent
UV—Ultraviolet.

[55 FR 30613, July 26, 1990, as amended at 60 FR 34335, June 30, 1995]

§ 86.090–5 General standards; increase in emissions; unsafe conditions.

(a)(1) Every new motor vehicle (or new motor vehicle engine) manufactured for sale, sold, offered for sale, introduced, or delivered for introduction to commerce, or imported into the United States for sale or resale which is subject to any of the standards prescribed in this subpart shall be covered by a certificate of conformity issued pursuant to §§ 86.090–21, 86.090–22, 86.090–23, 86.090–29, 86.090–30, 86.079–31, 86.079–32, 86.079–33, and 86.082–34.

(2) No heavy-duty vehicle manufacturer shall take any of the actions specified in section 203(a)(1) of the Act with respect to any Otto-cycle or diesel heavy-duty vehicle which uses an engine which has not been certified as meeting applicable standards.

(3) Notwithstanding paragraphs (a)(1) and (2) of this section, a light or heavy duty motor vehicle equipped with an engine certified to the nonroad provision of 40 CFR part 89 may be

sold, offered for sale or otherwise introduced into commerce by a motor vehicle manufacturer to a secondary manufacturer if the motor vehicle manufacturer obtains written assurance from the secondary manufacturer that such vehicle will be converted to a nonroad vehicle or to a piece of nonroad equipment, as defined in 40 CFR part 89, before title is transferred to an ultimate purchaser. Failure of the secondary manufacturer to convert such vehicles to nonroad vehicles or equipment prior to transfer to an ultimate purchaser shall be considered a violation of section 203(a) (1) and (3) of the Clean Air Act.

(b)(1) Any system installed on or incorporated in a new motor vehicle (or new motor vehicle engine) to enable such vehicle (or engine) to conform to standards imposed by this subpart.

(i) Shall not in its operation or function cause the emission into the ambient air of any noxious or toxic substance that would not be emitted in the operation of such vehicle (or engine) without such system, except as specifically permitted by regulation; and

(ii) Shall not in its operation, function or malfunction result in any unsafe condition endangering the motor vehicle, its occupants, or persons or property in close proximity to the vehicle.

(2) In establishing the physically adjustable range of each adjustable parameter on a new motor vehicle (or new motor vehicle engine), the manufacturer shall ensure that, taking into consideration the production tolerances, safe vehicle driveability characteristics are available within that range, as required by section 202(a)(4) of the Clean Air Act.

(3) Every manufacturer of new motor vehicles (or new motor vehicle engines) subject to any of the standards imposed by this subpart shall, prior to taking any of the actions specified in section 203(a)(1) of the Act, test or cause to be tested motor vehicles (or motor vehicle engines) in accordance with good engineering practice to ascertain that such test vehicles (or test engines) will meet the requirements of this section for the useful life of the vehicle (or engine).

[54 FR 14460, Apr. 11, 1989, as amended at 61 FR 58106, Nov. 12, 1996]

§ 86.090–27 Special test procedures.

(a) The Administrator may, on the basis of written application by a manufacturer, prescribe test procedures, other than those set forth in this part, for any light-duty vehicle, light-duty truck, heavy-duty engine, or heavy-duty vehicle which the Administrator determines is not susceptible to satisfactory testing by the procedures set forth in this part.

(b) If the manufacturer does not submit a written application for use of special test procedures but the Administrator determines that a light-duty vehicle, light-duty truck, heavy-duty engine, or heavy-duty vehicle is not susceptible to satisfactory testing by the procedures set forth in this part, the Administrator shall notify the manufacturer in writing and set forth the reasons for such rejection in accordance with the provisions of § 86.090–22(c).

[54 FR 14481, Apr. 11, 1989]

§ 86.091–2 Definitions.

The definitions of § 86.090–2 remain effective. The definitions listed in this section apply beginning with the 1991 model year.

Urban bus means a heavy heavy-duty diesel-powered passenger-carrying vehicle with a load capacity of fifteen or more passengers and intended primarily for intra-city operation, i.e., within the confines of a city or greater metropolitan area. Urban bus operation is characterized by short rides and frequent stops. To facilitate this type of operation, more than one set of quick-operating entrance and exit doors would normally be installed. Since fares are usually paid in cash or tokens rather than purchased in advance in the form of tickets, urban buses would normally have equipment installed for collection of fares. Urban buses are also typically characterized by the absence of equipment and facilities for long distance travel, e.g., rest rooms, large luggage compartments,

and facilities for stowing carry-on luggage. The useful life for urban buses is the same as the useful life for other heavy heavy-duty diesel engines.

[55 FR 30619, July 26, 1990]

§ 86.091–7 Maintenance of records; submittal of information; right of entry.

(a) The manufacturer of any new motor vehicle (or new motor vehicle engine) subject to any of the standards or procedures prescribed in this subpart shall establish, maintain and retain the following adequately organized and indexed records.

(1) *General records.* (i) The records required to be maintained by this paragraph shall consist of:

(A) Identification and description of all certification vehicles (or certification engines) for which testing is required under this subpart.

(B) A description of all emission control systems which are installed on or incorporated in each certification vehicle (or certification engine).

(C) A description of all procedures used to test each such certification vehicle (or certification engine).

(ii) A properly filed application for certification, following the format prescribed by the US EPA for the appropriate model year, fulfills each of the requirements of this paragraph (a)(1).

(2) *Individual records.* (i) A brief history of each motor vehicle (or motor vehicle engine) used for certification under this subpart including:

(A) In the case where a current production engine is modified for use in a certification vehicle (or as a certification engine), a description of the process by which the engine was selected and of the modifications made. In the case where the engine for a certification vehicle (or certification engine) is not derived from a current production engine, a general description of the buildup of the engine (e.g., experimental heads were cast and machined according to supplied drawings, etc.). In both cases above, a description of the origin and selection process for carburetor, distributor, fuel system components, fuel injection components, emission control system components, smoke exhaust emission control system components, and exhaust aftertreatment devices as applicable, shall be included. The required descriptions shall specify the steps taken to assure that the certification vehicle (or certification engine) with respect to its engine, drivetrain, fuel system, emission control system components, exhaust aftertreatment devices, smoke exhaust emission control system components, vehicle weight or any other devices or components, as applicable, that can reasonably be expected to influence exhaust or evaporative emissions, as applicable, will be representative of production vehicles (or engines) and that either all components and/or vehicles (or engine) construction processed, component inspection and selection techniques, and assembly techniques employed in constructing such vehicles (or engines) are reasonably likely to be implemented for production vehicles (or engines) or that they are as closely analogous as practicable to planned construction and assembly processed.

(B) A complete record of all emission tests performed (except tests performed by EPA directly), including test results, the date and purpose of each test, and the number of miles accumulated on the vehicle (or the number of hours accumulated on the engine).

(C) The date of each mileage (or service) accumulation run, listing the mileage (or number of operating hours) accumulated.

(D) [Reserved]

(E) A record and description of all maintenance and other servicing performed, giving the date of the maintenance or service and the reason for it.

(F) A record and description of each test performed to diagnose engine or emission control system performance, giving the date and time of the test and the reason for it.

(G) [Reserved]

(H) A brief description of any significant events affecting the vehicle (or engine) during any time in the period covered by the history not described by an entry under one of the previous headings including such extraordinary events as vehicle accidents (or accidents involving the engine) or dynamometer runaway.

(ii) Each such history shall be started on the date that the first of any of the

selection or buildup activities in paragraph (a)(2)(i)(A) of this section occurred with respect to the certification vehicle (or engine) changes or additional work is done on it, and shall be kept in a designated location.

(b) The manufacturer of any new motor vehicle (or new motor vehicle engine) subject to any of the standards prescribed in this subpart shall submit to the Administrator at the time of issuance by the manufacturer copies of all instructions or explanations regarding the use, repair, adjustment, maintenance, or testing of such vehicle (or engine) relevant to the control of crankcase, exhaust or evaporative emissions, as applicable, issued by the manufacturer for use by other manufacturers, assembly plants, distributors, dealers, and ultimate purchasers, *Provided,* That any material not translated into the English language need not be submitted unless specifically requested by the Administrator.

(c)(1) The manufacturer (or contractor for the manufacturer, if applicable) of any new vehicle or engine that is certified under averaging, trading, or banking programs (as applicable) shall establish, maintain, and retain the following adequately organized and indexed records for each such vehicle or heavy-duty engine produced:

(i) EPA engine family.

(ii) Vehicle (or engine) identification number.

(iii) Vehicle (or engine) model year and build date.

(iv) BHP rating (heavy-duty engines only).

(v) Purchaser and destination.

(vi) Assembly plant.

(2) The manufacturer (or contractor for the manufacturer, if applicable) of any new vehicle or engine family that is certified under averaging, trading, or banking programs (as applicable) shall establish, maintain, and retain the following adequately organized and indexed records for each such family:

(i) EPA engine family.

(ii) FEL.

(iii) BHP conversion factor and the transient test BHP for each configuration tested (heavy-duty engines only).

(iv) Useful life.

(v) Projected U.S. production volume for the model year.

(vi) Actual U.S. production volume for the model year.

(3) [Reserved]

(4) Nothing in this section limits the Administrator's discretion in requiring the manufacturer to retain additional records or submit information not specifically required by this section.

(5) Pursuant to a request made by the Administrator, the manufacturer shall submit to him the information that is required to be retained.

(6) EPA may void *ab initio* a certificate of conformity for a vehicle or engine family for which the manufacturer fails to retain the records required in this section or to provide such information to the Administrator upon request.

(7) Any engine family using NCPs must comply with the provisions established in the NCP program provided by 40 CFR part 86, subpart L.

(8) Any manufacturer, producing an engine family participating in trading using reserved credits, shall maintain the following records on a quarterly basis for each engine family in the trading subclass:

(i) The engine family,

(ii) The averaging set,

(iii) The actual quarterly and cumulative U.S. production volumes,

(iv) The value required to calculate credits as given in § 86.091–15,

(v) The resulting type [NO_x or particulate] and number of credits generated/required,

(vi) How and where credit surpluses are dispersed, and

(vii) How and through what means credit deficits are met.

(d)(1) Any manufacturer who has applied for certification of a new motor vehicle (or new motor vehicle engine) subject to certification test under this subpart shall admit or cause to be admitted any EPA Enforcement Officer or any EPA authorized representative during operating hours on presentation of credentials to any of the following:

(i) Any facility where any such tests or any procedures or activities connected with such test are or were performed.

(ii) Any facility where any new motor vehicle (or new motor vehicle engine) which is being, was, or is to be tested is present.

(iii) Any facility where any construction process or assembly process used in the modification or build up of such a vehicle (or engine) into a certification vehicle (or certification engine) is taking place or has taken place.

(iv) Any facility where any record or other document relating to any of the above is located.

(v) Any facility where any record or other document relating to the information specified in paragraph (c) of this section is located.

(2) [Reserved]

(3) In order to allow the Administrator to determine whether or not production motor vehicles (or production motor vehicle engines) conform to the conditions upon which a certificate of conformity has been issued, or conform in all material respects to the design specifications which applied to those vehicles (or engines) described in the application for certification for which a certificate of conformity has been issued to standards prescribed under section 202 of the Act, any manufacturer shall admit any EPA Enforcement Officer or any EPA authorized representative on presentation of credentials to both:

(i) Any facility where any document, design, or procedure relating to the translation of the design and construction of engines and emission related components described in the application for certification or used for certification testing into production vehicles (or production engines) is located or carried on;

(ii) Any facility where any motor vehicles (or motor vehicle engines) to be introduced into commerce are manufactured or assembled; and

(iii) Any facility where records specified in paragraph (c) of this section are located.

(4) On admission to any such facility referred to in paragraph (d)(4) of this section, any EPA Enforcement Officer or any EPA authorized representative shall be allowed:

(i) To inspect and monitor any aspects of such manufacture or assembly and other procedures;

(ii) To inspect and make copies of any such records, documents or designs;

(iii) To inspect and photograph any part or aspect of any such new motor vehicles (or new motor vehicle engines) and any component used in the assembly thereof that are reasonably related to the purpose of his entry; and

(iv) To inspect and make copies of any records and documents specified in paragraph (c) of this section.

(5) Any EPA Enforcement Officer or EPA authorized representative shall be furnished by those in charge of a facility being inspected with such reasonable assistance as he may request to help him discharge any function listed in this paragraph. Each applicant for or recipient of certification is required to cause those in charge of a facility operated for its benefit to furnish such reasonable assistance without charge to EPA whether or not the applicant controls the facility.

(6) The duty to admit or cause to be admitted any EPA Enforcement Officer or EPA authorized representative applies whether or not the applicant owns or controls the facility in question and applies both to domestic and to foreign manufacturers and facilities. EPA will not attempt to make any inspections which it has been informed that local law forbids. However, if local law makes it impossible to do what is necessary to insure the accuracy of data generated at a facility, no informed judgment that a vehicle or engine is certifiable or is covered by a certificate can properly be based on those data. It is the responsibility of the manufacturer to locate its testing and manufacturing facilities in jurisdictions where this situation will not arise.

(7) For purposes of this paragraph:

(i) *Presentation of credentials* shall mean display of the document designating a person as an EPA Enforcement Officer or EPA authorized representative.

(ii) Where vehicle, component, or engine storage areas or facilities are concerned, *operating hours* shall mean all times during which personnel other than custodial personnel are at work in the vicinity of the area or facility and have access to it.

(iii) Where facilities or areas other than those covered by paragraph (d)(7)(ii) of this section are concerned, *operating hours* shall mean all times

during which an assembly line is in operation or all times during which testing, maintenance, mileage (or service) accumulation, production or compilation of records, or any other procedure or activity related to certification testing, to translation of designs from the test stage to the production stage, or to vehicle (or engine) manufacture or assembly is being carried out in a facility.

(iv) *Reasonable assistance* includes, but is not limited to, clerical, copying, interpretation and translation services, the making available on request of personnel of the facility being inspected during their working hours to inform the EPA Enforcement Officer or EPA authorized representative of how the facility operates and to answer his questions, and the performance on request of emissions tests on any vehicle (or engine) which is being, has been, or will be used for certification testing. Such tests shall be nondestructive, but may require appropriate mileage (or service) accumulation. A manufacturer may be compelled to cause the personal appearance of any employee at such a facility before an EPA Enforcement Officer or EPA authorized representative by written request for his appearance, signed by the Assistant Administrator for Air and Radiation, served on the manufacturer. Any such employee who has been instructed by the manufacturer to appear will be entitled to be accompanied, represented, and advised by counsel.

(v) Any entry without 24 hour prior written or oral notification to the affected manufacturer shall be authorized in writing by the Assistant Administrator for Air and Radiation.

(8) EPA may void *ab initio* a certificate of conformity for vehicle or engine families introduced into commerce if the manufacturer (or contractor for the manufacturer, if applicable) fails to comply with any provision of this section.

(e) EPA Enforcement Officers or EPA authorized representatives are authorized to seek a warrant or court order authorizing the EPA Enforcement Officers or EPA authorized representatives to conduct activities related to entry and access as authorized in this section, as appropriate, to execute the functions specified in this section. EPA Enforcement Officers or EPA authorized representatives may proceed ex parte to obtain a warrant whether or not the Enforcement Officers first attempted to seek permission of the manufacturer or the party in charge of the facilities in question to conduct activities related to entry and access as authorized in this section.

(f) A manufacturer shall permit EPA Enforcement Officers or EPA authorized representatives who present a warrant or court order as described in paragraph (e) of this section to conduct activities related to entry and access as authorized in this section and as described in the warrant or court order. The manufacturer shall cause those in charge of its facility or facility operated for its benefit to permit EPA Enforcement Officers or EPA authorized representatives to conduct activities related to entry and access as authorized in this section pursuant to a warrant or court order whether or not the manufacturer controls the facility. In the absence of such a warrant or court order, EPA Enforcement Officers or EPA authorized representatives may conduct activities related to entry and access as authorized in this section only upon the consent of the manufacturer or the party in charge of the facilities in question.

(g) It is not a violation of this part or the Clean Air Act for any person to refuse to permit EPA Enforcement Officers or EPA authorized representatives to conduct activities related to entry and access as authorized in this section without a warrant or court order.

[55 FR 30619, July 26, 1990, as amended at 75 FR 22978, Apr. 30, 2010]

§ 86.091–29 Testing by the Administrator.

(a) [Reserved]

(b)(1) Paragraph (b) of this section applies to heavy-duty engines.

(2) The Administrator may require that any one or more of the test engines be submitted to him, at such place or places as he may designate, for the purpose of conducting emissions tests. The Administrator may specify that he will conduct such testing at the manufacturer's facility, in which

case instrumentation and equipment specified by the Administrator shall be made available by the manufacturer for test operations. Any testing conducted at a manufacturer's facility pursuant to this paragraph shall be scheduled by the manufacturer as promptly as possible.

(3)(i) Whenever the Administrator conducts a test on a test engine the results of that test, unless subsequently invalidated by the Administrator, shall comprise the official data for the engine at that prescribed test point and the manufacturer's data for that prescribed test point shall not be used in determining compliance with emission standards (or family emission limits, as appropriate).

(ii) Whenever the Administrator does not conduct a test on a test engine at a test point, the manufacturer's test data will be accepted as the official data for that test point: *Provided*, That if the Administrator makes a determination based on testing under paragraph (b)(2) of this section, that there is a lack of correlation between the manufacturer's test equipment and the test equipment used by the Administrator, no manufacturer's test data will be accepted for purposes of certification until the reasons for the lack of correlation are determined and the validity of the data is established by the manufacturer, *And further provided*, That if the Administrator has reasonable basis to believe that any test data submitted by the manufacturer is not accurate or has been obtained in violation of any provision of this part, the Administrator may refuse to accept that data as the official data pending retesting or submission of further information.

(iii)(A)(*1*) The Administrator may adjust or cause to be adjusted any adjustable parameter of an emission-data engine which the Administrator has determined to be subject to adjustment for certification testing in accordance with § 86.085–22(e)(1), to any setting within the physically adjustable range of that parameter, as determined by the Administrator in accordance with § 86.085–22(e)(3)(i), prior to the performance of any tests to determine whether such engine conforms to applicable emission standards, including tests performed by the manufacturer under § 86.088–23(c)(2). The Administrator, in making or specifying such adjustments, may consider the effect of the deviation from the manufacturer's recommended setting on emissions performance characteristics as well as the likelihood that similar settings will occur on in-use heavy-duty engines. In determining likelihood, the Administrator may consider factors such as, but not limited to, the effect of the adjustment on engine performance characteristics and surveillance information from similar in-use engines.

(*2*) For those engine parameters which the Administrator has not determined to be subject to adjustment for certification testing in accordance with § 86.085–22(e)(1), the emission-data engine presented to the Administrator for testing shall be calibrated within the production tolerances applicable to the manufacturer's specifications to be shown on the engine label (see § 86.091–35(a)(3)(iii)) as specified in the application for certification. If the Administrator determines that an engine is not within such tolerances, the engine shall be adjusted at the facility designated by the Administrator prior to the test and an engineering report shall be submitted to the Administrator describing the corrective action taken. Based on the engineering report, the Administrator will determine if the engine shall be used as an emission-data engine.

(B) If the Administrator determines that the test data developed under paragraph (b)(3)(iii)(A) of this section would cause the emission-data engine to fail due to excessive 125-hour emission values or by the application of the appropriate deterioration factor, then the following procedure shall be observed:

(*1*) The manufacturer may request a retest. Before the retest, those engine parameters which the Administrator has not determined to be subject to adjustment for certification testing in accordance with § 86.085–22(e)(1) may be readjusted to the manufacturer's specifications, if these adjustments were made incorrectly prior to the first test. The Administrator may adjust or cause to be adjusted any parameter which the Administrator has determined to

be subject to adjustment in accordance with § 86.085–22(e)(3)(i). However, if the idle speed parameter is one which the Administrator has determined to be subject to adjustment, the Administrator shall not adjust it to a setting which causes a higher engine idle speed than would have been possible within the physically adjustable range of the idle speed parameter on the engine before it accumulated any dynamometer service, all other parameters being identically adjusted for the purpose of the comparison. Other maintenance or repairs may be performed in accordance with § 86.088–25. All work on the vehicle shall be done at such location and under such conditions as the Administrator may prescribe.

(*2*) The engine will be retested by the Administrator and the results of this test shall comprise the official data for the emission-data engine.

(iv) If sufficient durability data are not available at the time of any emission test conducted under paragraph (b)(2) of this section to enable the Administrator to determine whether an emission-data engine would fail, the manufacturer may request a retest in accordance with the provisions of paragraph (b)(3)(iii)(B) (1) and (2) of this section. If the manufacturer does not promptly make such request, he shall be deemed to have waived the right to a retest. A request for retest must be made before the manufacturer removes the engine from the test premises.

(c)(1) Paragraph (c) of this section applies to gasoline-fueled and methanol-fueled heavy-duty vehicles.

(2) The Administrator may require that any one or more of the evaporative emission family-system combinations included in the manufacturer's statement(s) of compliance be installed on an appropriate vehicle and such vehicle be submitted to him, at such place or places as he may designate, for the purpose of conducting emissions tests. The Administrator may specify that he will conduct such testing at the manufacturer's facility, in which case instrumentation and equipment specified by the Administrator shall be made available by the manufacturer for test operations. Any testing conducted at a manufacturer's facility pursuant to this paragraph shall be scheduled by the manufacturer as promptly as possible.

(3)(i) Whenever the Administrator conducts a test segment on an evaporative emission family-system combination, the results of that test segment, unless subsequently invalidated by the Administrator, shall comprise the official data for that test segment for the evaporative emission family-system combination, and the manufacturer's data, analyses, etc., for that test segment shall not be used in determining compliance with emission standards. The Administrator may stop a test after any evaporative test segment and use as official data any valid results obtained up to that point in the test, as described in subpart B of this part.

(ii) Whenever the Administrator does not conduct a test on an evaporative emission family-system combination, the manufacturer's test data will be accepted as the official data: *Provided*, That if the Administrator makes a determination, based on testing under paragraph (c)(2) of this section, that there is a lack of correlation between the manufacturer's test equipment and the test equipment used by the Administrator, no manufacturer's test data will be accepted for purposes of certification until the reasons for the lack of correlation are determined and the validity of the data is established by the manufacturer, *And further provided*, That if the Administrator has reasonable basis to believe that any test data, analyses, or other information submitted by the manufacturer is not accurate or has been obtained in violation of any provision of this part, the Administrator may refuse to accept those data, analyses, etc., as the official data pending retesting or submission of further information.

(Secs. 202, 203, 206, 207, 208, 301a, Clean Air Act, as amended; 42 U.S.C. 7521, 7522, 7525, 7541, 7542, 7601a)

[50 FR 10675, Mar. 15, 1985, as amended at 54 FR 14488, Apr. 11, 1989; 58 FR 16020, Mar. 24, 1993; 79 FR 23690, Apr. 28, 2014]

§ 86.092–2 Definitions.

The definitions of § 86.091–2 remain effective. The definitions listed in this section apply beginning with the 1992 model year.

(a) *Proven emission control systems* are emission control components or systems (and fuel metering systems) that have completed full durability testing evaluation over a vehicle's useful life in some other certified engine family, or have completed bench or road testing demonstrated to be equal or more severe than certification mileage accumulation requirements. Alternatively, proven components or systems are those that are determined by EPA to be of comparable functional quality and manufactured using comparable materials and production techniques as components or systems which have been durability demonstrated in some other certified engine family. In addition, the components or systems must be employed in an operating environment (e.g., temperature, exhaust flow, etc.,) similar to that experienced by the original or comparable components or systems in the original certified engine family.

(b) *Unproven emission control systems* are emission control components or systems (and fuel metering systems) that do not qualify as proven emission control systems.

(c) *Similar systems* are engine, fuel metering and emission control system combinations which use the same fuel (e.g., gasoline, diesel, etc.), combustion cycle (i.e., two or four stroke), general type of fuel system (i.e., carburetor or fuel injection), catalyst system (e.g., none, oxidization, three-way plus oxidization, three-way only, etc.), fuel control system (i.e., feedback or nonfeedback), secondary air system (i.e., equipped or not equipped) and EGR (i.e., equipped or not equipped).

(d) *Conveniently available* service facility and spare parts for small-volume manufacturers means that the vehicle manufacturer has a qualified service facility at or near the authorized point of sale or delivery of its vehicles and maintains an inventory of all emission-related spare parts or has made arrangements for the part manufacturers to supply the parts by expedited shipment (e.g., utilizing overnight express delivery service, UPS, etc.).

[55 FR 7187, Feb. 28, 1990]

§ 86.093–2 Definitions.

The definitions of § 86.092–2 continue to apply. The definitions listed in this section apply beginning with the 1993 model year.

Bus means a heavy heavy-duty diesel-powered passenger-carrying vehicle with a load capacity of fifteen or more passengers that is centrally fueled, and all urban buses. This definition only applies in the context of §§ 86.093–11 and 86.093–35.

Centrally fueled bus means a bus that is refueled at least 75 percent of the time at one refueling facility that is owned, operated, or controlled by the bus operator.

Urban bus means a passenger-carrying vehicle powered by a heavy heavy-duty diesel engine, or of a type normally powered by a heavy heavy-duty diesel engine, with a load capacity of fifteen or more passengers and intended primarily for intracity operation, i.e., within the confines of a city or greater metropolitan area. Urban bus operation is characterized by short rides and frequent stops. To facilitate this type of operation, more than one set of quick-operating entrance and exit doors would normally be installed. Since fares are usually paid in cash or tokens, rather than purchased in advance in the form of tickets, urban buses would normally have equipment installed for collection of fares. Urban buses are also typically characterized by the absence of equipment and facilities for long distance travel, e.g., rest rooms, large luggage compartments, and facilities for stowing carry-on luggage. The useful life for urban buses is the same as the useful life for other heavy heavy-duty diesel engines.

[58 FR 15795, Mar. 24, 1993]

§ 86.094–2 Definitions.

The definitions of § 86.093–2 remain effective. The definitions listed in this section are effective beginning with the 1994 model year.

Adjusted Loaded Vehicle Weight means the numerical average of vehicle curb weight and GVWR.

Bi-directional control means the capability of a diagnostic tool to send messages on the data bus that temporarily overrides the module's control over a

sensor or actuator and gives control to the diagnostic tool operator. Bi-directional controls do not create permanent changes to engine or component calibrations.

Data stream information means information (i.e., messages and parameters) originated within the vehicle by a module or intelligent sensors (i.e., a sensor that contains and is controlled by its own module) and transmitted between a network of modules and/or intelligent sensors connected in parallel with either one or two communication wires. The information is broadcast over the communication wires for use by other modules (e.g., chassis, transmission, etc.) to conduct normal vehicle operation or for use by diagnostic tools. Data stream information does not include engine calibration related information.

Defeat device means an auxilary emission control device (AECD) that reduces the effectiveness of the emission control system under conditions which may reasonably be expected to be encountered in normal vehicle operation and use, unless:

(1) Such conditions are substantially included in the Federal emission test procedure;

(2) The need for the AECD is justified in terms of protecting the vehicle against damage or accident; or

(3) The AECD does not go beyond the requirements of engine starting.

Durability useful life means the highest useful life mileage out of the set of all useful life mileages that apply to a given vehicle. The durability useful life determines the duration of service accumulation on a durability data vehicle. The determination of durability useful life shall reflect any alternative useful life mileages approved by the Administrator under § 86.094–21(f). The determination of durability useful life shall exclude any standard and related useful life mileage for which the manufacturer has obtained a waiver of emission data submission requirements under § 86.094–23(c)

Element of design means any control system (i.e., computer software, electronic control system, emission control system, computer logic), and/or control system calibrations, and/or the results of systems interaction, and/or hardware items on a motor vehicle or motor vehicle engine.

Engine warm-up cycle means sufficient vehicle operation such that the coolant temperature has risen by at least 40 °F from engine starting and reaches a minimum temperature of 160 °F.

Enhanced service and repair information means information which is specific for an original equipment manufacturer's brand of tools and equipment.

Equivalent test weight means the weight, within an inertia weight class, which is used in the dynamometer testing of a vehicle and which is based on its loaded vehicle weight or adjusted loaded vehicle weight in accordance with the provisions of subparts A and B of this part.

Gaseous fuel means natural gas or liquefied petroleum gas.

Generic service and repair information means information which is not specific for an original equipment manufacturer's brand of tools and equipment.

Heavy light-duty truck means any light-duty truck rated greater than 6000 lbs GVWR.

Indirect information means any information that is not specifically contained in the service literature, but is contained in items such as tools or equipment provided to franchised dealers (or others).

Intermediary means any individual or entity, other than an original equipment manufacturer, which provides service or equipment to automotive technicians.

Intermediate Temperature Cold Testing means testing done pursuant to the driving cycle and testing conditions contained in 40 CFR part 86, subpart C, at temperatures between 25 °F (−4 °C) and 68 °F (20 °C).

Light-duty truck 1 means any light light-duty truck up through 3750 lbs loaded vehicle weight.

Light-duty truck 2 means any light light-duty truck greater than 3750 lbs loaded vehicle weight.

Light-duty truck 3 means any heavy light-duty truck up through 5750 lbs adjusted loaded vehicle weight.

Light-duty truck 4 means any heavy light-duty truck greater than 5750 lbs adjusted loaded vehicle weight.

Light light-duty truck means any light-duty truck rated up through 6000 lbs GVWR.

Liquefied petroleum gas means a liquid hydrocarbon fuel that is stored under pressure and is composed primarily of species that are gases at atmospheric conditions (temperature = 25 °C and pressure = 1 atm), excluding natural gas.

Multi-fuel means capable of operating on two or more different fuel types, either separately or simultaneously.

Natural gas means a fuel whose primary constituent is methane.

Non-Methane Hydrocarbon Equivalent means the sum of the carbon mass emissions of non-oxygenated non-methane hydrocarbons, methanol, formaldehyde, or other organic compounds that are separately measured, expressed as gasoline-fueled vehicle hydrocarbons. In the case of exhaust emissions, the hydrogen-to-carbon ratio of the equivalent hydrocarbon is 1.85:1. In the case of diurnal and hot soak emissions, the hydrogen-to-carbon ratios of the equivalent hydrocarbons are 2.33:1 and 2.2:1, respectively.

Petroleum fuel means liquid fuels normally derived from crude oil, excluding liquefied petroleum gas. Gasoline and diesel fuel are petroleum fuels.

Test weight basis means the basis on which equivalent test weight is determined in accordance with § 86.129–94 of subpart B of this part.

Useful life means:

(a) For light-duty vehicles, and for model year 1994 and later light light-duty trucks not subject to the Tier 0 standards of paragraph (a) of § 86.094–9, intermediate useful life and/or full useful life. Intermediate useful life is a period of use of 5 years or 50,000 miles, whichever occurs first. Full useful life is a period of use of 10 years or 100,000 miles, whichever occurs first, except as otherwise noted in § 86.094–9.

(b) For light light-duty trucks subject to the Tier 0 standards of paragraph (a) of § 86.094–9, and for heavy light-duty truck engine families, intermediate and/or full useful life. Intermediate useful life is a period of use of 5 years or 50,000 miles, whichever occurs first. Full useful life is a period of use of 11 years or 120,000 miles, whichever occurs first.

(c) For an Otto-cycle heavy-duty engine family, a period of use of 8 years or 110,000 miles, whichever first occurs.

(d) For a diesel heavy-duty engine family:

(1) For light heavy-duty diesel engines, period of use of 8 years or 110,000 miles, whichever first occurs.

(2) For medium heavy-duty diesel engines, a period of use of 8 years or 185,000 miles, whichever first occurs.

(3) For heavy-duty diesel engines, a period of use of 8 years or 290,000 miles, whichever first occurs, except as provided in paragraph (d)(4) of this definition.

(4) for heavy heavy-duty diesel engines used in urban buses, for the particulate standard, a period of use of 10 years or 290,000 miles, whichever first occurs.

(e) As an option for both light-duty trucks under certain conditions and heavy-duty engine families, an alternative useful life period assigned by the Administrator under the provisions of paragraph (f) of § 86.094–21.

(f) The useful-life period for purposes of the emissions defect warranty and emissions performance warranty shall be a period of 5 years/50,000 miles, whichever first occurs, for light-duty trucks, Otto-cycle heavy-duty engines and light heavy-duty diesel engines. For all other heavy-duty diesel engines the aforementioned period is 5 years/100,000 miles, whichever first occurs. However, in no case may this period be less than the manufacturer's basic mechanical warranty period for the engine family.

[56 FR 25739, June 5, 1991, as amended at 57 FR 31897, July 17, 1992; 58 FR 4002, Jan. 12, 1993; 58 FR 9485, Feb. 19, 1993; 58 FR 15799, Mar. 24, 1993; 59 FR 48494, Sept. 21, 1994; 60 FR 34335, June 30, 1995; 60 FR 40496, Aug. 9, 1995]

§ 86.094–3 Abbreviations.

(a) The abbreviations in § 86.090–3 remain effective. The abbreviations in this section apply beginning with the 1994 model year.

(b) The abbreviations in this section apply to this subpart, and also to subparts B, E, F, H, M, N and P of this part, and have the following meanings:

ALVW—Adjusted Loaded Vehicle Weight
LPG—Liquefied Petroleum Gas
NMHC—Nonmethane Hydrocarbons
NMHCE—Non-Methane Hydrocarbon Equivalent
PM—Particulate Matter
THC—Total Hydrocarbons

[56 FR 25740, June 5, 1991, as amended at 58 FR 33208, June 16, 1993; 59 FR 48494, Sept. 21, 1994; 60 FR 34335, June 30, 1995]

§ 86.094–7 Maintenance of records; submittal of information; right of entry.

(a) Introductory text through (a)(2) [Reserved]

(a)(3) All records, other than routine emission test records, required to be maintained under this subpart shall be retained by the manufacturer for a period of eight (8) years after issuance of all certificates of conformity to which they relate. Routine emission test records shall be retained by the manufacturer for a period of one (1) year after issuance of all certificates of conformity to which they relate. Records may be retained as hard copy or reduced to microfilm, punch cards, etc., depending on the record retention procedures of the manufacturer, provided, that in every case all the information contained in the hard copy shall be retained.

(b)–(c)(2) [Reserved]

(c)(3) The manufacturer (or contractor for the manufacturer, if applicable) shall retain all records required to be maintained under this section for a period of eight (8) years from the due date for the end-of-model year averaging, trading, and banking reports. Records may be retained as hard copy or reduced to microfilm, ADP files, etc., depending on the manufacturer's record retention procedure, provided that in every case all the information contained in the hard copy is retained.

(c)(4)–(d)(1)(v) [Reserved]

(d)(1)(vi) Any facility where any record or other document relating to the information specified in paragraph (h) of this section is located.

(2) Upon admission to any facility referred to in paragraph (d)(1) of this section, any EPA Enforcement Officer or any EPA authorized representative shall be allowed:

(i) To inspect and monitor any part or aspect of such procedures, activities, and testing facilities, including, but not limited to, monitoring vehicle (or engine) preconditioning, emissions tests and mileage (or service) accumulation, maintenance, and vehicle soak and storage procedures (or engine storage procedures), and to verify correlation or calibration of test equipment;

(ii) To inspect and make copies of any such records, designs, or other documents, including those records specified in § 86.091–7(c); and

(iii) To inspect and make copies of any such records, designs or other documents including those records specified in paragraph (h) of this section; and

(iv) To inspect and/or photograph any part or aspect of any such certification vehicle (or certification engine) and any components to be used in the construction thereof.

(d)(3)–(g) [Reserved]

(h)(1) [Reserved]

(2) In addition, the manufacturer (or contractor for the manufacturer, if applicable) of each certified engine family shall establish, maintain, and retain adequately organized records of the actual U.S. sales volume for the model year for each engine family. The manufacturer may petition the Administrator to allow actual volume produced for U.S. sale to be used in lieu of actual U.S. sales. Such petition shall be submitted within 30 days of the end of the model year to the Manufacturer Operations Division. For the petition to be granted, the manufacturer must establish to the satisfaction of the Administrator that actual production volume is functionally equivalent to actual sales volume.

(3) The manufacturer (or contractor for the manufacturer, if applicable) shall retain all records required to be maintained under this section for a period of eight (8) years from the due date for the applicable end-of-model year report. Records may be retained as hard copy or reduced to microfilm, ADP film, etc., depending on the manufacturer's record retention procedure,

provided that in every case all the information contained in the hard copy is retained.

(4) Nothing in this section limits the Administrator's discretion in requiring the manufacturer to retain additional records or submit information not specifically required by this section.

(5) Pursuant to a request made by the Administrator, the manufacturer shall submit to him the information that is required to be retained.

(6) EPA may void ab initio a certificate for a vehicle certified to Tier 1 certification standards or to the respective evaporative and/or refueling test procedure and accompanying evaporative and/or refueling standards as set forth or otherwise referenced in § 86.098–10 for which the manufacturer fails to retain the records required in this section or to provide such information to the Administrator upon request.

[56 FR 25740, June 5, 1991, as amended at 57 FR 31897, July 17, 1992; 75 FR 22978, Apr. 30, 2010; 79 FR 23691, Apr. 28, 2014]

§ 86.094–14 Small-volume manufacturer certification procedures.

(a)(1) The small-volume manufacturer certification procedures described in paragraphs (b) and (c) of this section are optional. Small-volume manufacturers may use these optional procedures to demonstrate compliance with the general standards and specific emission requirements contained in this subpart.

(2) To satisfy the durability data requirements of the small-volume manufacturer certification procedures, manufacturers of vehicles (or engines) as described in paragraph (b) of this section may use assigned deterioration factors that the Administrator determines by methods described in paragraph (c)(3)(ii) of this section. However, if no deterioration factor data (either the manufacturer's or industry-wide deterioration factor data) are available from previously completed durability data vehicles or engines used for certification, manufacturers of vehicles (or engines) as described in paragraph (b) of this section or with new technology not previously certified may use assigned deterioration factors that the Administrator determines by alternative methods, based on good engineering judgment. The factors that the Administrator determines by alternative methods will be published in an advisory letter or advisory circular.

(b)(1) The optional small-volume manufacturer certification procedures apply to heavy-duty vehicles, and heavy-duty engines produced by manufacturers with U.S. sales, including all vehicles and engines imported under the provisions of §§ 85.1505 and 85.1509 of this chapter (for the model year in which certification is sought) of fewer than 10,000 units (Light-Duty Vehicles, Light-Duty Trucks, Heavy-Duty Vehicles and Heavy-Duty Engines combined).

(2) For the purpose of determining the applicability of paragraph (b)(1) of this section, the sales the Administrator shall use shall be the aggregate of the projected or actual sales of those vehicles and/or engines in any of these groupings:

(i) Vehicles and/or engines produced by two or more firms, one of which is 10 percent or greater part owned by another;

(ii) Vehicles and/or engines produced by any two or more firms if a third party has equity ownership of 10 percent or more in each of the firms;

(iii) Vehicles and/or engines produced by two or more firms having a common corporate officer(s) who is (are) responsible for the overall direction of the companies;

(iv) Vehicles and/or engines imported or distributed by all firms where the vehicles and/or engines are manufactured by the same entity and the importer or distributor is an authorized agent of the entity.

(3) If the aggregated sales, as determined in paragraph (b)(2) of this section are less than 301 units, the manufacturers in the aggregated relationship may certify under the provisions in this section that apply to manufacturers with sales of less than 301 units.

(4) If the aggregated sales, as determined in paragraph (b)(2) of this section are greater than 300 but fewer than 10,000 units, the manufacturers in the aggregated relationship may certify under the provisions in this section that apply to manufacturers with sales from and including 301 through

9,999 motor vehicles and motor vehicles engines per year.

(5) If the aggregated sales, as determined in paragraph (b)(2) of this section are equal to or greater than 10,000 units, then the manufacturers involved in the aggregated relationship will be allowed to certify a number of units under the small-volume engine family certification procedures (reference § 86.001–24(e)) in accordance with the following criteria:

(i) If a manufacturer purchases less than 50 percent of another manufacturer, each manufacturer retains its right to certify 9,999 units using the small-volume engine family certification procedures.

(ii) If a manufacturer purchases 50 percent or more of another manufacturer, the manufacturer with the over 50 percent interest must share, with the manufacturer it purchased, its 9,999 units under the small-volume engine family certification procedures.

(iii) In a joint venture arrangement (50/50 ownership) between two manufacturers, each manufacturer retains its eligibility for 9,999 units under the small-volume engine family certification procedures, but the joint venture must draw its maximum 9,999 units from the units allocated to its parent manufacturers.

(c) All the provisions of this subpart apply to small-volume manufacturers, except as described in this paragraph (c). The appropriate model year of specific sections shall be determined in accordance with § 86.084–4.

(1) Section 86.080–12 is not applicable.

(2) Small-volume manufacturers shall include in their records all the information that EPA requires in § 86.007–21. This information will be considered part of the manufacturer's application for certification. However, the manufacturer is not required to submit the information to the Administrator unless the Administrator requests it.

(3) Small-volume manufacturers may satisfy the requirements of § 86.001–24(b) and (c) as follows:

(i) *Emission data*. Small-volume manufacturers may select one emission data test vehicle (engine) per engine family by the worst-case emissions criteria as follows:

(A) *Heavy-duty Otto-cycle engines*. The manufacturer shall select one emission data engine first based on the largest displacement within the engine family. Then within the largest displacement the manufacturer shall select, in the order listed, highest fuel flow at the speed of maximum rated torque, the engine with the most advanced spark timing, no EGR or lowest EGR flow, and no air pump or lowest actual flow air pump.

(B) *Heavy-duty diesel engines*. The manufacturer shall select one emission data engine based on the highest fuel feed per stroke, primarily at the speed of maximum rated torque and secondarily at rated speed.

(ii) *Durability data*. Small-volume manufacturers may satisfy the durability data requirements with the following procedures:

(A) Manufacturers with aggregated sales of less than 301 motor vehicles and motor vehicle engines per year may use assigned deterioration factors that the Administrator determines and prescribes. The factors will be the Administrator's estimate, periodically updated and published in an advisory letter or advisory circular, of the 70th percentile deterioration factors calculated using the industry-wide data base of previously completed durability data vehicles or engines used for certification. However, the manufacturer may, at its option, accumulate miles (hours) on a durability data vehicle (engine) and complete emission tests for the purpose of establishing its own deterioration factors.

(B)(*1*) Manufacturers with aggregated sales from and including 301 through 9,999 motor vehicles and motor vehicle engines per year certifying light-duty vehicle exhaust emissions from vehicles equipped with proven emission control systems shall use assigned deterioration factors that the manufacturer determines based on its good engineering judgment. However, the manufacturer may not use deterioration factors less than either the average or 70th percentile of all of that manufacturer's deterioration factor data, whichever is less. These minimum deterioration factors shall be calculated according to procedures in paragraph (c)(3)(ii)(B)(*2*), of this section. If the

manufacturer does not have at least two data points to calculate these manufacturer specific average deterioration factors, then the deterioration factors shall be no less than the EPA supplied industry-wide deterioration factors. However, the manufacturer may, at its option, accumulate miles on a durability data vehicle and complete emission tests for the purpose of establishing its own deterioration factors.

(*2*) The manufacturer's minimum deterioration factors shall be calculated using the deterioration factors from all engine families, within the same vehicle/engine-fuel usage category (*e.g.*, gasoline-fueled light-duty vehicle, etc.) previously certified to the same emission standards. The manufacturer shall use only deterioration factors from engine families previously certified by the manufacturer and the deterioration factors shall not be included in the calculation more than once. The deterioration factors for each pollutant shall be calculated separately. The manufacturer may, at its option, limit the deterioration factors used in the calculation of the manufacturer's minimum deterioration factors to those from all similar systems to the system being certified if sufficient data (*i.e.*, from at least two certified systems) exists. All data eligible to be grouped as similar system data shall be used in calculating similar system deterioration factors. Any deterioration factors used in calculating similar system deterioration factors shall not be included in calculating the manufacturer's minimum deterioration factors used to certify any of the manufacturer's remaining vehicle systems.

(C) Manufacturers with aggregated sales from 301 through 9,999 motor vehicles and motor vehicle engines and certifying light-duty vehicle exhaust emissions from vehicles equipped with unproven emission control systems shall use deterioration factors that the manufacturer determines from official certification durability data generated by vehicles from engine families representing a minimum of 25 percent of the manufacturer's sales equipped with unproven emission control systems. The sales projections are to be based on total sales projected for each engine/system combination. The durability programs applicable to such manufacturers for this purpose shall be the Standard AMA, the Production AMA and the Alternative Service Accumulation Durability Programs of § 86.094–13. The durability data vehicle (engine) mileage accumulation and emission tests are to be conducted in accordance with § 86.094–13. The manufacturer must develop deterioration factors by generating durability data in accordance with § 86.094–13 on a minimum of 25 percent of the manufacturer's projected sales (by engine/system combination) that is equipped with unproven emission control systems. The manufacturer must complete the 25 percent durability requirement before the remainder of the manufacturer's sales equipped with unproven emission control systems is certified using manufacturer-determined assigned deterioration factors. Alternatively, any of these manufacturers may, at their option, accumulate miles on durability data vehicles and complete emission tests for the purpose of establishing their own deterioration factors on the remaining sales.

(4) Section 86.001–24(d) and (e) are not applicable.

(5) Small-volume manufacturers shall comply with the following provisions instead of § 86.007–30(a)(2) and (b):

(i) Small-volume manufacturers shall submit an application for certification containing the following elements:

(A) The names, addresses, and telephone numbers of the persons the manufacturer authorizes to communicate with us.

(B) A brief description of the vehicles (or engines) covered by the certificate (the manufacturers' sales data book or advertising, including specifications, may satisfy this requirement for most manufacturers). The description shall include, as a minimum, the following items:

(*1*) Engine evaporative/refueling family names and vehicle (or engine) configurations.

(*2*) Vehicle carlines or engine models to be listed on the certificate of conformity.

(*3*) The test weight and horsepower setting for each vehicle or engine configuration.

(*4*) Projected sales.

(*5*) Combustion cycle.

(*6*) Cooling mechanism.

(*7*) Number of cylinders.

(*8*) Displacement.

(*9*) Fuel system type.

(*10*) Number of catalytic converters, type, volume, composition, surface area, and total precious metal loading.

(*11*) Method of air aspiration.

(*12*) Thermal reactor characteristics.

(*13*) Suppliers' and/or manufacturers' name and model number of any emission related items of the above, if purchased from a supplier who uses the items in its own certified vehicle(s) or engine(s).

(*14*) A list of emission component part numbers.

(*15*) Drawings, calibration curves, and descriptions of emission related components, including those components regulated under § 86.001–22(e), and schematics of hoses and other devices connecting these components.

(*16*)–(*17*) [Reserved]

(*18*) Proof that the manufacturer has obtained or entered an agreement to purchase, when applicable, the insurance policy required by the § 85.1510(b) of this chapter. The manufacturer may submit a copy of the insurance policy or purchase agreement as proof that the manufacturer has obtained or entered an agreement to purchase the insurance policy.

(*19*) For each evaporative/refueling emission family, a description of any unique procedures required to perform evaporative and/or refueling emission tests (as applicable) (including canister working capacity, canister bed volume, and fuel temperature profile for the running loss test) for all vehicles in that evaporative/refueling emission family, and a description of the method used to develop those unique procedures.

(*20*) For each evaporative/refueling emission family:

(*i*) Canister working capacity, according to the procedures specified in § 86.132–96(h)(1)(iv);

(*ii*) Canister bed volume; and

(*iii*) Fuel temperature profile for the running loss test, according to the procedures specified in § 86.129–94(d).

(C) The results of all emission tests the manufacturer performs to demonstrate compliance with the applicable standards.

(D)(*1*) The following statement signed by the authorized representative of the manufacturer: ''The vehicles (or engines) described herein have been tested in accordance with (list of the applicable subparts A, B, I, N, or P) of part 86, title 40, Code of Federal Regulations, and on the basis of those tests are in conformance with that subpart. All the data and records required by that subpart are on file and are available for inspection by the EPA Administrator. We project the total U.S. sales of vehicles (engines) subject to this subpart (including all vehicles and engines imported under the provisions of 40 CFR 85.1505 and 40 CFR 85.1509) to be fewer than 10,000 units.''

(*2*) [Reserved]

(*3*) A statement that the vehicles or engines described in the manufacturer's application for certification are not equipped with auxiliary emission control devices which can be classified as a defeat device as defined in § 86.004–2.

(*4*) A statement of compliance with section 206(a)(3) of the Clean Air Act (42 U.S.C. 7525(a)(3)).

(*5*)–(*6*) [Reserved]

(*7*) A statement affirming that the manufacturer will provide a list of emission and emission-related service parts, including part number designations and sources of parts, to the vehicle purchaser for all emission and emission-related parts which might affect vehicle emission performance throughout the useful life of the vehicle. Secondly, it must state that qualified service facilities and emission-related repair parts will be conveniently available to serve its vehicles. In addition, if service facilities are not available at the point of sale or distribution, the manufacturer must indicate that the vehicle purchaser will be provided information identifying the closest authorized service facility to the point of sale, if in the United States, or the closest authorized service facility to the point of distribution to the ultimate purchaser if the vehicle was purchased outside of the United States by the ultimate purchaser. Such information should also be made available to the Administrator upon request.

(E) Manufacturers utilizing deterioration factors determined by the manufacturer based on its good engineering judgment (reference paragraph (c)(3)(ii)(B) of this section) shall provide a description of the method(s) used by the manufacturer to determine the deterioration factors.

(ii) If the manufacturer meets the requirements of this subpart, the Administrator will issue a certificate of conformity for the vehicles or engines described in the application for certification.

(iii) The certificate will be issued for such a period not to exceed one model year as the Administrator may determine and upon such terms as he may deem necessary to assure that any vehicle or engine covered by the certificate will meet the requirements of the Act and of this subpart.

(iv) If, after a review of the statements and descriptions submitted by the manufacturer, the Administrator determines that the manufacturer has not met the applicable requirements, the Administrator shall notify the manufacturer in writing of his intention to deny certification, setting forth the basis for his determination. The manufacturer may request a hearing on the Administrator's determination. If the manufacturer does not request a hearing or present the required information, the Administrator will deny certification.

(6) Sections 86.079–31 and 86.079–32 are not applicable.

(7) The following provisions apply for small-volume manufacturers instead of the provisions specified in § 86.079–33:

(i) Small-volume manufacturers may make production changes (running changes) without receiving the Administrator's prior approval. The manufacturer shall assure (by conducting emission tests as it deems necessary) that the affected vehicles (engines) remain in compliance with the requirements of this part.

(ii) The manufacturer shall notify the Administrator within seven days after implementing any production related change (running change) that would affect vehicle emissions. This notification shall include any changes to the information required under paragraph (c)(5)(i) of this section. The manufacturer shall also amend as necessary its records required under paragraph (c)(2) of this section to confirm the production design change.

(8) Section 86.082–34 is not applicable.

[81 FR 73976, Oct. 25, 2016]

§ 86.094–21 Application for certification.

(a) A separate application for a certificate of conformity shall be made for each set of standards (or family emission limits, as appropriate) and each class of new motor vehicles or new motor vehicle engines. Such application shall be made to the Administrator by the manufacturer and shall be updated and corrected by amendment.

(b) The application shall be in writing, signed by an authorized representative of the manufacturer, and shall include the following:

(1)(i) Identification and description of the vehicles (or engines) covered by the application and a description of their engine (vehicles only), emission control system, and fuel system components. This description will include:

(A) A detailed description of each Auxiliary Emission Control Device (AECD) to be installed in or on any vehicle (or engine) covered by the application;

(B) A detailed justification of each AECD (described in (b)(1)(i)(A) of this section) which results in a reduction in effectiveness of the emission control system. Such a justification may be disapproved by consideration of currently available technology, whereupon the application for certification may be disapproved under § 86.094–22(b) for the incorporation of a defeat device;

(ii)(A) The manufacturer shall provide to the Administrator in the application for certification:

(*1*) A list of those parameters which are physically capable of being adjusted (including those adjustable parameters for which access is difficult) and that, if adjusted to settings other than the manufacturer's recommended setting, may affect emissions;

(*2*) A specification of the manufacturer's intended physically adjustable range of each such parameter, and the production tolerances of the limits or

stops used to establish the physically adjustable range;

(*3*) A description of the limits or stops used to establish the manufacturer's intended physically adjustable range of each adjustable parameter, or any other means used to inhibit adjustment;

(*4*) The nominal or recommended setting, and the associated production tolerances, for each such parameter.

(B) The manufacturer may provide, in the application for certification, information relating to why certain parameters are not expected to be adjusted in actual use and to why the physical limits or stops used to establish the physically adjustable range of each parameter, or any other means used to inhibit adjustment, are effective in preventing adjustment of parameters on in-use vehicles to settings outside the manufacturer's intended physically adjustable ranges. This may include results of any tests to determine the difficulty of gaining access to an adjustment or exceeding a limit as intended or recommended by the manufacturer.

(C) The Administrator may require to be provided detailed drawings and descriptions of the various emission related components, and/or hardware samples of such components, for the purpose of making his determination of which vehicle or engine parameter will be subject to adjustment for new certification and Selective Enforcement Audit testing and of the physically adjustable range for each such vehicle or engine parameter.

(2) Projected U.S. sales data sufficient to enable the Administrator to select a test fleet representative of the vehicles (or engines) for which certification is requested, and, for model year 1994 through 1995 light-duty vehicles and light light-duty trucks and model year 1996 heavy light-duty trucks, data sufficient to determine projected compliance with the Tier 1 standards implementation schedules of §§ 86.094–8 and 86.094–9. The data shall also include the altitude of intended sale for model year 1994 light-duty trucks certified to the Tier 0 standards of § 86.094–9. Volume projected to be produced for U.S. sale may be used in lieu of projected U.S. sales.

(3) A description of the test equipment and fuel proposed to be used.

(4)(i) [Reserved]

(ii) For heavy-duty vehicles equipped with gasoline-fueled or methanol-fueled engines, the Administrator does not assume that each evaporative emission family-evaporative emission control system combination will deteriorate in a unique manner during the useful life of the vehicle. The manufacturer shall therefore identify those evaporative emission deterioration factors which shall be applied to the various evaporative emission family-evaporative emission control system combinations which are expected to exhibit similar deterioration characteristics during the useful life of the vehicle.

(5)(i)(A) A description of the test procedures to be used to establish the durability data or the exhaust emission deterioration factors required to be determined and supplied in § 86.094–23(b)(1).

(B) For each light-duty truck engine family provided an optional useful life period under the provisions of paragraph (f) of this section, and for each heavy-duty engine family, a statement of the useful life.

(C) For engine families provided an alternative useful-life period under paragraph (f) of this section, a statement of that alternative period and a brief synopsis of the justification.

(ii) For heavy-duty diesel engine families, a statement of the primary intended service class (light, medium, or heavy) and an explanation as to why that service class was selected. Each diesel engine family shall be certified under one primary intended service class only. After reviewing the guidance in § 86.090–2, the class shall be determined on the basis of which class best represents the majority of the sales of that engine family.

(iii)(A) For each light-duty vehicle engine family, each light-duty truck

engine family, and each heavy-duty engine family, a statement of recommended maintenance and procedures necessary to assure that the vehicles (or engines) covered by a certificate of conformity in operation conform to the regulations, and a description of the program for training of personnel for such maintenance, and the equipment required.

(B) [Reserved]

(iv) At the option of the manufacturer, the proposed composition of the emission data test fleet or (where applicable) the durability data test fleet.

(6) [Reserved]

(7)(i) For Otto-cycle heavy-duty engines, the application must state whether the engine family is being certified for use in all vehicles regardless of their Gross Vehicle Weight Rating (see § 86.091–10 (a)(1)(i) and (a)(3)(i)), or only for use in vehicles with a Gross Vehicle Weight Rating greater than 14,000 pounds.

(ii) If the engine family is being certified for use in all vehicles and is being certified to the emission standards applicable to Otto-cycle engines for use only in vehicles with a Gross Vehicle Weight Rating over 14,000 pounds under the provisions of § 86.091–10(a)(3), then the application must also attest that the engine family, together with all other engine families being certified under the provisions of § 86.091–10(a)(3), represent no more than 5 percent of model year sales of the manufacturer of all Otto-cycle heavy-duty engines for use in vehicles with Gross Vehicle Weight Ratings of up to 14,000 pounds.

(8) [Reserved]

(c) Complete copies of the application and of any amendments thereto, and all notifications under §§ 86.079–32, 86.079–33, and 86.082–34 shall be submitted in such multiple copies as the Administrator may require.

(d) [Reserved]

(e) For vehicles equipped with gasoline-fueled or methanol-fueled heavy-duty engines, the manufacturer shall specify a maximum nominal fuel tank capacity for each evaporative emission family-evaporative emission control system combination.

(f) Light-duty truck and heavy-duty engine manufacturers who believe that the useful life periods of § 86.094–2 are significantly unrepresentative for one or more engine families (either too long or too short), may petition the Administrator to provide an alternative useful-life period. This petition must include the full rationale behind the request together with any supporting data and other evidence. Based on this or other information the Administrator may assign an alternative useful-life period. Any petition should be submitted in a timely manner, to allow adequate time for a thorough evaluation. For model year 1994 and later light-duty trucks not subject to the Tier 0 standards of § 86.094–9, alternative useful life periods will be granted only for THC, THCE, and idle CO requirements.

(g) [Reserved]

(h) For each engine family incorporating an emission control diagnostic system, the manufacturer shall submit the following information:

(1) Detailed written information fully describing the functional operation characteristics of the diagnostic system.

(2) The general method of detecting malfunctions for each emission-related powertrain component.

(i) [Reserved]

(j) For methanol-fueled vehicles, the manufacturer shall specify:

(1) Whether the vehicle is a flexible fuel vehicle or a dedicated vehicle (manufacturers must obtain advance approval from the Administrator to classify methanol-fueled vehicles that can use gasoline as dedicated vehicles); and

(2) The fuel(s) (i.e., the percent methanol) for which the vehicle was designed.

[58 FR 4009, Jan. 12, 1993, as amended at 58 FR 9487, Feb. 19, 1993, 60 FR 34335, June 30, 1995; 63 FR 70694, Dec. 22, 1998; 75 FR 22978, Apr. 30, 2010; 79 FR 23691, Apr. 28, 2014]

§ 86.094–22 Approval of application for certification; test fleet selections; determinations of parameters subject to adjustment for certification and Selective Enforcement Audit, adequacy of limits, and physically adjustable ranges.

(a) After a review of the application for certification and any other information which the Administrator may

require, the Administrator may approve the application and select a test fleet in accordance with § 86.094–24.

(b) *Disapproval of application.* (1) The Administrator may disapprove in whole or in part an application for certification for reasons including incompleteness, inaccuracy, inappropriate proposed mileage (or service) accumulation procedures, test equipment, or fuel; or incorporation of defeat devices in vehicles (or on engines) described by the application.

(2) The issuance of a certificate of conformity does not exempt the covered vehicles from further evaluation or testing for defeat device purposes as described in § 86.094–16.

(c) Where any part of an application is rejected, the Administrator shall notify the manufacturer in writing and set forth the reasons for such rejection. Within 30 days following receipt of such notification, the manufacturer may request a hearing on the Administrator's determination. The request shall be in writing, signed by an authorized representative of the manufacturer and shall include a statement specifying the manufacturer's objections to the Administrator's determinations, and data in support of such objections. If, after the review of the request and supporting data, the Administrator finds that the request raises a substantial factual issue, he shall provide the manufacturer a hearing in accordance with § 86.078–6 with respect to such issue.

(d) *Approval of test procedures.* (1) [Reserved]

(2) *Light-duty trucks using the Standard Self-Approval durability Program and heavy-duty engines only.* The Administrator does not approve the test procedures for establishing exhaust emission deterioration factors for light-duty trucks using the Standard Self-Approval Durability Program described in § 86.094–13(f) nor for heavy-duty engines. The manufacturer shall submit these procedures and determinations as required in § 86.094–21(b)(5)(i) prior to determining the deterioration factors.

(3) Heavy-duty vehicles equipped with gasoline-fueled or methanol-fueled engines only. The Administrator does not approve the test procedures for establishing the evaporative emission deterioration factors. The test procedure will conform to the requirements in § 86.094–23(b)(3).

(e) *Parameter adjustment requirements.* When the Administrator selects emission data vehicles for the test fleet, he will at the same time determine those vehicle or engine parameters which will be subject to adjustment for certification, Selective Enforcement Audit and Production Compliance Audit testing, the adequacy of the limits, stops, seals, or other means used to inhibit adjustment, and the resulting physically adjustable ranges for each such parameter and will then notify the manufacturer of his determinations.

(1) *Determining parameters subject to adjustment.* (i) Except as noted in paragraph (e)(1)(iv) of this section, the Administrator may determine to be subject to adjustment the idle fuel-air mixture parameter on Otto-cycle vehicles (or engines) (carbureted or fuel-injected); the choke valve action parameter(s) on carbureted, Otto-cycle vehicles (or engines); or any parameter on any vehicle (or engine) (Otto-cycle or diesel) which is physically capable of being adjusted, may significantly affect emissions, and was not present on the manufacturer's vehicles (or engines) in the previous model year in the same form and function.

(ii) The Administrator may, in addition, determine to be subject to adjustment any other parameters on any vehicle or engine which is physically capable of being adjusted and which may significantly affect emissions. However, the Administrator may do so only if he has previously notified the manufacturer that he might do so and has found, at the time he gave this notice, that the intervening period would be adequate to permit the development and application of the requisite technology, giving appropriate consideration to the cost of compliance within such period. In no event will this notification be given later than September 1 of the calendar year two years prior to the model year.

(iii) In determining the parameters subject to adjustment, the Administrator will consider the likelihood that, for each of the parameters listed in paragraphs (e)(1) (i) and (ii) of this

section, settings other than the manufacturer's recommended setting will occur on in-use vehicles (or engines). In determining likelihood, the Administrator may consider such factors as, but not limited to, information contained in the preliminary application, surveillance information from similar in-use vehicles (or engines), the difficulty and cost of gaining access to an adjustment, damage to the vehicle (or engine) if an attempt is made to gain such access and the need to replace parts following such attempt, and the effect of settings other than the manufacturer's recommended setting on vehicle (or engine) performance characteristics including emission characteristics.

(iv) Manual chokes of heavy-duty engines only will not be considered a parameter subject to adjustment under the parameter adjustment requirements.

(2)(i) The Administrator shall determine a parameter to be adequately inaccessible or sealed if:

(A) In the case of an idle mixture screw, the screw is recessed within the carburetor casting and sealed with lead, thermosetting plastic, or an inverted elliptical spacer or sheared off after adjustment at the factory, and the inaccessibility is such that the screw cannot be accessed and/or adjusted with simple tools in one-half hour or for $20 (1978 dollars) or less;

(B) In the case of a choke bimetal spring, the plate covering the bimetal spring is riveted or welded in place, or held in place with nonreversible screws;

(C) In the case of a parameter which may be adjusted by elongating or bending adjustable members (e.g., the choke vacuum break), the elongation of the adjustable member is limited by design or, in the case of a bendable member, the member is constructed of a material which when bent would return to its original shape after the force is removed (plastic or spring steel materials);

(D) In the case of any parameter, the manufacturer demonstrates that adjusting the parameter to settings other than the manufacturer's recommended setting takes more than one-half hour or costs more than $20 (1978 dollars).

(ii) The Administrator shall determine a physical limit or stop to be an adequate restraint on adjustability if:

(A) In the case of a threaded adjustment, the threads are terminated, pinned, or crimped so as to prevent additional travel without breakage or need for repairs which take more than one-half hour or cost more than $20 (1978 dollars);

(B) The adjustment is ineffective at the end of the limits of travel regardless of additional forces or torques applied to the adjustment;

(C) The manufacturer demonstrates that travel or rotation limits cannot be exceeded with the use of simple and inexpensive tools (screwdriver, pliers, open-end or box wrenches, etc.) without incurring significant and costly damage to the vehicle (or engine) or control system or without taking more than one-half hour or costing more than $20 (1978 dollars).

(iii) If manufacturer service manuals or bulletins describe routine procedures for gaining access to a parameter or for removing or exceeding a physical limit, stop, seal or other means used to inhibit adjustment, or if surveillance data indicate that gaining access, removing, or exceeding is likely, paragraphs (e)(2)(i) and (ii) of this section shall not apply for that parameter.

(iv) In determining the adequacy of a physical limit, stop, seal, or other means used to inhibit adjustment of a parameter not covered by paragraph (e)(2)(i) or (ii) of this section, the Administrator will consider the likelihood that it will be circumvented, removed, or exceeded on in-use vehicles. In determining likelihood, the Administrator may consider such factors as, but not limited to, information contained in the preliminary application; surveillance information from similar in-use vehicles (or engines); the difficulty and cost of circumventing, removing, or exceeding the limit, stop, seal, or other means; damage to the vehicle (or engine) if an attempt is made to circumvent, remove, or exceed it and the need to replace parts following such attempt; and the effect of settings beyond the limit, stop, seal, or other means on vehicle (or engine) performance characteristics other than emission characteristics.

(3) The Administrator shall determine two physically adjustable ranges for each parameter subject to adjustment:

(i)(A) In the case of a parameter determined to be adequately inaccessible or sealed, the Administrator may include within the physically adjustable range applicable to testing under this subpart (certification testing) all settings within the production tolerance associated with the nominal setting for that parameter, as specified by the manufacturer in the preliminary application for certification; or

(B) In the case of other parameters, the Administrator shall include within this range all settings within physical limits or stops determined to be adequate restraints on adjustability. The Administrator may also include the production tolerances on the location of these limits or stops when determining the physically adjustable range.

(ii)(A) In the case of a parameter determined to be adequately inaccessible or sealed, the Administrator shall include within the physically adjustable range applicable to testing under subparts G or K (Selective Enforcement Audit and Production Compliance Audit) only the actual settings to which the parameter is adjusted during production; or

(B) In the case of other parameters, the Administrator shall include within this range all settings within physical limits or stops determined to be adequate restraints on adjustability, as they are actually located on the test vehicle (or engine).

(f) *Submittal of advance information.* (1) If the manufacturer submits the information specified in § 86.094–21(b)(1)(ii) in advance of its full preliminary application for certification, the Administrator shall review the information and make the determinations required in paragraph (e) of this section within 90 days of the manufacturer's submittal.

(2) The 90-day decision period is exclusive of the elapsed time during which EPA may request additional information from manufacturers regarding an adjustable parameter and the receipt of the manufacturers' response(s).

(g) Within 30 days following receipt of notification of the Administrator's determinations made under paragraph (e) of this section, the manufacturer may request a hearing on the Administrator's determinations. The request shall be in writing, signed by an authorized representative of the manufacturer, and shall include a statement specifying the manufacturer's objections to the Administrator's determinations, and data in support of such objections. If, after review of the request and supporting data, the Administrator finds that the request raises a substantial factual issue, he shall provide the manufacturer a hearing in accordance with § 86.078–6 with respect to such issue.

[48 FR 4010, Jan. 12, 1993, as amended at 75 FR 22978, Apr. 30, 2010]

§ 86.094–25 Maintenance.

(a) [Reserved]

(b) This section specifies emission-related scheduled maintenance for purposes of obtaining durability data and for inclusion in maintenance instructions furnished to purchasers of new motor vehicles and new motor vehicles engines under § 86.087–38.

(1) All emission-related scheduled maintenance for purposes of obtaining durability data must occur at the same mileage intervals (or equivalent intervals if engines, subsystems, or components are used) that will be specified in the manufacturer's maintenance instructions furnished to the ultimate purchaser of the motor vehicle or engine under § 86.094–35. This maintenance schedule may be updated as necessary throughout the testing of the vehicle/engine, provided that no maintenance operation is deleted from the maintenance schedule after the operation has been performed on the test vehicle or engine.

(2) Any emission-related maintenance which is performed on vehicles, engines, subsystems, or components must be technologically necessary to assure in-use compliance with the emission standards. The manufacturer must submit data which demonstrate to the Administrator that all of the

emission-related scheduled maintenance which is to be performed is technologically necessary. Scheduled maintenance must be approved by the Administrator prior to being performed or being included in the maintenance instructions provided to purchasers under § 86.010–38.

(3) For Otto-cycle light-duty vehicles, light-duty trucks and heavy duty engines, emission-related maintenance in addition to, or at shorter intervals than, that listed in paragraphs (b)(3) (i) through (vii) of this section will not be accepted as technologically necessary, except as provided in paragraph (b)(7) of this section.

(i)(A) [Reserved]

(B) The cleaning or replacement of Otto-cycle heavy duty engine spark plugs shall occur at 25,000 miles (or 750 hours) of use and at 25,000-mile (or 750-hour) intervals thereafter, for engines certified for use with unleaded fuel only.

(ii) [Reserved]

(4)–(6) [Reserved]

(7) *Changes to scheduled maintenance.* (i) For maintenance practices that existed prior to the 1980 model year, only the maintenance items listed in paragraphs (b) (3) and (4) of this section are currently considered by EPA to be emission-related. The Administrator may, however, determine additional scheduled maintenance items that existed prior to the 1980 model year to be emission-related by announcement in a FEDERAL REGISTER Notice. In no event may this notification occur later than September 1 of the calendar year two years prior to the affected model year.

(ii) In the case of any new scheduled maintenance, the manufacturer must submit a request for approval to the Administrator for any maintenance that it wishes to recommend to purchasers and perform during durability determination. New scheduled maintenance is that maintenance which did not exist prior to the 1980 model year, including that which is a direct result of the implementation of new technology not found in production prior to the 1980 model year. The manufacturer must also include its recommendations as to the category (i.e., emission-related or non-emission-related, critical or non-critical) of the subject maintenance and, for suggested emission-related maintenance, the maximum feasible maintenance interval. Such requests must include detailed evidence supporting the need for the maintenance requested, and supporting data or other substantiation for the recommended maintenance category and for the interval suggested for emission-related maintenance. Requests for new scheduled maintenance must be approved prior to the introduction of the new maintenance. The Administrator will then designate the maintenance as emission-related or non-emission-related. For maintenance items established as emission-related, the Administrator will further designate the maintenance as critical if the component which receives the maintenance is a critical component under paragraph (b)(6) of this section. For each maintenance item designated as emission-related, the Administrator will also establish a technologically necessary maintenance interval, based on industry data and any other information available to EPA. Designations of emission-related maintenance items, along with their identification as critical or non-critical, and establishment of technologically necessary maintenance intervals, will be announced in the FEDERAL REGISTER.

(iii) Any manufacturer may request a hearing on the Administrator's determinations in this paragraph (b)(7). The request shall be in writing and shall include a statement specifying the manufacturer's objections to the Administrator's determinations, and data in support of such objections. If, after review of the request and supporting data, the Administrator finds that the request raises a substantial factual issue, he shall provide the manufacturer a hearing as described in 40 CFR part 1068, subpart G.

(c) *Non-emission-related scheduled maintenance* which is reasonable and technologically necessary (e.g., oil change, oil filter change, fuel filter change, air filter change, cooling system maintenance, adjustment of idle speed, governor, engine bolt torque, valve lash, injector lash, timing, adjustment of air pump drive belt tension, lubrication of the exhaust manifold heat control valve, lubrication of

carburetor choke linkage, retorqueing carburetor mounting bolts, etc.) may be performed on durability data vehicles at the least frequent intervals recommended by the manufacturer to the ultimate purchaser, (e.g., not at the intervals recommended for severe service).

(d) [Reserved]

(e) *Maintenance on emission data vehicles and engines.* (1) Adjustment of engine idle speed on emission data vehicles may be performed once before the low-mileage/low-hour emission test point. Any other engine, emission control system, or fuel system adjustment, repair, removal, disassembly, cleaning, or replacement on emission data vehicles shall be performed only with the advance approval of the Administrator.

(2)–(3) [Reserved]

(4) Repairs to vehicle components of an emission data vehicle other than the engine, emission control system, or fuel system, shall be performed only as a result of part failure, vehicle system malfunction, or with the advance approval of the Administrator.

(f) Equipment, instruments, or tools may not be used to identify malfunctioning, maladjusted, or defective engine components unless the same or equivalent equipment, instruments, or tools will be available to dealerships and other service outlets and:

(1) Are used in conjunction with scheduled maintenance on such components; or

(2) Are used subsequent to the identification of a vehicle or engine malfunction, as provided in paragraph (d)(2) of this section for durability data vehicles or in paragraph (e)(1) of this section for emission data vehicles; or

(3) Unless specifically authorized by the Administrator.

(g) [Reserved]

(h) All test data, maintenance reports, and required engineering reports shall be compiled and provided to the Administrator in accordance with § 86.090–23.

[58 FR 4018, Jan. 12, 1993, as amended at 58 FR 9487, Feb. 19, 1993; 79 FR 23691, Apr. 28, 2014; 81 FR 73978, Oct. 25, 2016]

§ 86.095–35 Labeling.

(a) The manufacturer of any motor vehicle (or motor vehicle engine) subject to the applicable emission standards (and family emission limits, as appropriate) of this subpart, shall, at the time of manufacture, affix a permanent legible label, of the type and in the manner described below, containing the information hereinafter provided, to all production models of such vehicles (or engines) available for sale to the public and covered by a Certificate of Conformity under § 86.007–30(a).

(1)–(2) [Reserved]

(3) *Heavy-duty engines.* (i) A permanent legible label shall be affixed to the engine in a position in which it will be readily visible after installation in the vehicle.

(ii) The label shall be attached to an engine part necessary for normal engine operation and not normally requiring replacement during engine life.

(iii) The label shall contain the following information lettered in the English language in block letters and numerals which shall be of a color that contrasts with the background of the label:

(A) The label heading: ''Important Engine Information.'';

(B) The full corporate name and trademark of the manufacturer; though the label may identify another company and use its trademark instead of the manufacturer's as long as the manufacturer complies with the branding provisions of 40 CFR 1068.45.

(C) Engine displacement (in cubic inches or liters) and engine family and model designations;

(D) Date of engine manufacture (month and year). The manufacturer may, in lieu of including the date of manufacture on the engine label, maintain a record of the engine manufacture dates. The manufacturer shall provide the date of manufacture records to the Administrator upon request;

(E) Engine specifications and adjustments as recommended by the manufacturer. These specifications should indicate the proper transmission position during tune-up and what accessories (e.g., air conditioner), if any, should be in operation;

(F) For Otto-cycle engines the label should include the idle speed, ignition timing, and the idle air-fuel mixture setting procedure and value (e.g., idle

CO, idle air-fuel ratio, idle speed drop), and valve lash;

(G) For diesel engines the label should include the advertised hp at rpm, fuel rate at advertised hp in mm^3/stroke, valve lash, initial injection timing, and idle speed;

(H) The prominent statement: ''This engine conforms to U.S. EPA regulations applicable to XXXX Model Year New Heavy-Duty Engines.'';

(I) If the manufacturer has an alternate useful life period under the provisions of § 86.094–21(f), the prominent statement: ''This engine has been certified to meet U.S. EPA standards for a useful-life period of XXX miles or XXX hours of operation, whichever occurs first. This engine's actual life may vary depending on its service application.'' The manufacturer may alter this statement only to express the assigned alternate useful life in terms other than miles or hours (*e.g.*, years, or hours only);

(J) For diesel engines, the prominent statement: ''This engine has a primary intended service application as a XXX heavy-duty engine.'' (The primary intended service applications are light, medium, and heavy, as defined in § 86.090–2.);

(K) For engines certified under the alternative standards specified in § 86.007–11(g) or § 86.008–10(g), the following statement: ''This engine is certified for only in specialty vehicles as specified in [40 CFR 86.007–11 or 40 CFR 86.008–10]'';

(L) For diesel engines which are included in the diesel heavy-duty particulate averaging program, the family particulate emission limit to which the engine is certified;

(M) For any heavy-duty engines which are included in the heavy-duty NO_X averaging program, the family NO_X emission limit to which the engine is certified;

(N) Engines granted final admission under § 85.1505 of this chapter must comply with the labeling requirements contained in § 85.1510 of this chapter.

(O) For engines with one or more approved AECDs for emergency vehicle applications under paragraph (4) of the definition of ''defeat device'' in § 86.004–2, the statement: ''THIS ENGINE IS FOR INSTALLATION IN EMERGENCY VEHICLES ONLY.''

(iv) The label may be made up of one or more pieces: Provided, That all pieces are permanently attached to the same engine or vehicle part as applicable.

(4) *Heavy-duty vehicles employing a fuel or fuels covered by evaporative emission standards.* This paragraph (a)(4) applies for vehicles subject to evaporative emission standards under this subpart, as described in § 86.016–1(a)(4). See 40 CFR part 1037 for provisions that apply in later model years.

(i) A permanent, legible label shall be affixed in a readily visible position in the engine compartment. If such vehicles do not have an engine compartment, the label required in this paragraph (a)(4) shall be affixed in a readily available position on the operator's enclosure or on the engine.

(ii) The label shall be affixed by the vehicle manufacturer who has been issued the Certificate of Conformity for such vehicle, in such a manner that it cannot be removed without destroying or defacing the label. The label shall not be affixed to any equipment which is easily detached from such vehicle.

(iii) The label shall contain the following information lettered in the English language in block letters and numerals, which shall be of a color that contrasts with the background of the label:

(A) The label heading: Vehicle Emission Control Information;

(B) Full corporate name and trademark of manufacturer;

(C) Evaporative family identification;

(D) The maximum nominal fuel tank capacity (in gallons), as specified in 40 CFR 1037.135; and

(E) An unconditional statement of compliance with the appropriate model year U.S. Environmental Protection Agency regulations which apply to XXX-fueled heavy-duty vehicles.

(F) Vehicles granted final admission under § 85.1505 of this chapter must comply with the labeling requirements contained in § 85.1510 of this chapter.

(b) The provisions of this section shall not prevent a manufacturer from

also reciting on the label that such vehicle (or engine) conforms to any applicable state emission standards for new motor vehicles (or new motor vehicle engines) or any other information that such manufacturer deems necessary for, or useful to, the proper operation and satisfactory maintenance of the vehicle (or engine).

(c) Vehicles powered by model year 2007 through 2013 diesel-fueled engines must include permanent, readily visible labels on the dashboard (or instrument panel) and near all fuel inlets that state ''Use Ultra Low Sulfur Diesel Fuel Only''; or ''Ultra Low Sulfur Diesel Fuel Only''.

(d)–(g) [Reserved]

(h) *Notification of nonconformance penalty*. (1) Light-duty trucks and heavy-duty vehicles and engines for which nonconformance penalties are to be paid in accordance with § 86.1113–87(b) shall have the following information printed on the label required in paragraph (a) of this section. The manufacturer shall begin labeling production engines or vehicles within 10 days after the completion of the PCA. This statement shall read: ''The manufacturer of this engine/vehicle will pay a nonconformance penalty to be allowed to introduce it into commerce at an emission level higher than the applicable emission standard. The compliance level (or new emission standard) for this engine/vehicle is XXX.'' (The manufacturer shall insert the applicable pollutant and compliance level calculated in accordance with § 86.1112–87(a).)

(2) If a manufacturer introduces an engine or vehicle into commerce prior to the compliance level determination of § 86.1112–87(a), it shall provide the engine or vehicle owner with a label as described above to be affixed in a location in proximity to the label required in paragraph (a) of this section within 30 days of the completion of the PCA.

(i) The Administrator may approve in advance other label content and formats, provided the alternative label contains information consistent with this section.

[56 FR 25755, June 5, 1991, as amended at 81 FR 73978, Oct. 25, 2016]

EDITORIAL NOTE: For FEDERAL REGISTER citations affecting § 86.095–35, see the List of CFR Sections Affected, which appears in the Finding Aids section of the printed volume and at *www.govinfo.gov*.

§ 86.096–2 Definitions.

The definitions listed in this section apply beginning with the 1996 model year. The definitions of § 86.094–2 continue to apply to 1996 and later model year vehicles.

Certification Short Test means the test, for gasoline-fueled Otto-cycle light-duty vehicles and light-duty trucks, performed in accordance with the procedures contained in 40 CFR part 86 subpart O.

Diurnal breathing losses means diurnal emissions.

Diurnal emissions means evaporative emissions resulting from the daily cycling of ambient temperatures.

Hot soak emissions means evaporative emissions after termination of engine operation.

Hot-soak losses means hot soak emissions.

Resting losses means evaporative emissions that may occur continuously, that are not diurnal emissions, hot soak emissions, running losses, or spitback emissions.

Running losses means evaporative emissions that occur during vehicle operation.

Spitback emissions means evaporative emissions resulting from the loss of liquid fuel that is emitted from a vehicle during a fueling operation.

Useful life means:

(1) For light-duty vehicles, and for light light-duty trucks not subject to the Tier 0 standards of § 86.094–9(a), intermediate useful life and/or full useful life. Intermediate useful life is a period of use of 5 years or 50,000 miles, whichever occurs first. Full useful life is a period of use of 10 years or 100,000 miles, whichever occurs first, except as otherwise noted in § 86.094–9. The useful life of evaporative emission control systems on the portion of these vehicles subject to the evaporative emission test requirements of § 86.130–96 is defined as a period of use of 10 years or 100,000 miles, whichever occurs first.

(2) For light light-duty trucks subject to the Tier 0 standards of § 86.094–9(a), and for heavy light-duty truck engine families, intermediate and/or full useful life. Intermediate useful life is a

period of use of 5 years or 50,000 miles, whichever occurs first. Full useful life is a period of use of 11 years or 120,000 miles, whichever occurs first. The useful life of evaporative emission control systems on the portion of these vehicles subject to the evaporative emission test requirements of § 86.130–96 is also defined as a period of 11 years or 120,000 miles, whichever occurs first.

(3) For an Otto-cycle heavy-duty engine family, a period of use of 8 years or 110,000 miles, whichever occurs first, except for the portion of evaporative emission control systems subject to the evaporative emission test requirements of § 86.1230–96, for which the applicable period of use is 10 years or 110,000 miles, whichever occurs first.

(4) For a diesel heavy-duty engine family:

(i) For light heavy-duty diesel engines, period of use of 8 years or 110,000 miles, whichever occurs first.

(ii) For medium heavy-duty diesel engines, a period of use of 8 years or 185,000 miles, whichever occurs first.

(iii) For heavy heavy-duty diesel engines, a period of use of 8 years or 290,000 miles, whichever occurs first, except as provided in paragraph (4)(iv) of this definition.

(iv) For heavy heavy-duty diesel engines used in urban buses, for the particulate standard, a period of use of 10 years or 290,000 miles, whichever occurs first.

(5) As an option for both light-duty trucks under certain conditions and heavy-duty engine families, an alternative useful life period assigned by the Administrator under the provisions of § 86.094–21(f).

(6) The useful-life period for purposes of the emissions defect warranty and emissions performance warranty shall be a period of 5 years/50,000 miles, whichever occurs first, for light-duty trucks, Otto-cycle heavy-duty engines and light heavy-duty diesel engines. For all other heavy-duty diesel engines the aforementioned period is 5 years/100,000 miles, whichever occurs first. However, in no case may this period be less than the manufacturer's basic mechanical warranty period for the engine family.

[58 FR 16020, Mar. 24, 1993, as amended at 58 FR 58417, Nov. 1, 1993]

§ 86.096–3 Abbreviations.

(a) The abbreviations in § 86.094–3 continue to apply. The abbreviation in this section applies beginning with the 1996 model year.

(b) The abbreviation in this section applies to this subpart and to subpart O of this part, and has the following meaning:

CST—Certification Short Test

[58 FR 58417, Nov. 1, 1993]

§ 86.096–24 Test vehicles and engines.

(a) *General.* This paragraph applies to the grouping of vehicles or engines into families.

(1) The vehicles or engines covered by an application for certification will be divided into groupings of engines which are expected to have similar emission characteristics throughout their useful life. Each group of engines with similar emission characteristics is defined as a separate engine family.

(2) To be classed in the same engine family, engines must be identical in all the respects listed in paragraphs (a)(2)(i) through (x) of this section.

(i) The cylinder bore center-to-center dimensions.

(ii)–(iii) [Reserved]

(iv) The cylinder block configuration (air-cooled or water-cooled: L–6, 90 deg., V–8, and so forth).

(v) The location of the intake and exhaust valves (or ports).

(vi) The method of air aspiration.

(vii) The combustion cycle.

(viii) Catalytic converter characteristics.

(ix) Thermal reactor characteristics.

(x) Type of air inlet cooler (for example, intercoolers and after-coolers) for diesel heavy-duty engines.

(3)(i) Engines identical in all the respects listed in paragraph (a)(2) of this section may be further divided into different engine families if the Administrator determines that they may be expected to have different emission characteristics. This determination will be based upon a consideration of the features of each engine listed in paragraphs (a)(3)(i) (A) through (G) of this section.

(A) The bore and stroke.

(B) The surface-to-volume ratio of the nominally dimensioned cylinder at the top dead center positions.

(C) The intake manifold induction port sizes and configuration.

(D) The exhaust manifold port size and configuration.

(E) The intake and exhaust valve sizes.

(F) The fuel system.

(G) The camshaft timing and ignition or injection timing characteristics.

(ii) Light-duty trucks and heavy-duty engines produced in different model years and distinguishable in the respects listed in paragraph (a)(2) of this section are treated as belonging to a single engine family if the Administrator requires it, after determining that the engines may be expected to have similar emission deterioration characteristics.

(4) Where engines are of a type which cannot be divided into engine families based upon the criteria listed in paragraphs (a)(2) and (3) of this section, the Administrator establishes families for those engines based upon those features most related to their emission characteristics. Engines that are eligible to be included in the same engine family based on the criteria in paragraphs (a)(2) and (a)(3)(i) of this section may be further divided into different engine families if the manufacturer determines that they may be expected to have different emission characteristics. This determination will be based upon a consideration of the features of each engine listed in paragraphs (a)(4) (i) through (iii) of this section.

(i) The dimension from the center line of the crankshaft to the center line of the camshaft.

(ii) The dimension from the center line of the crankshaft to the top of the cylinder block head face.

(iii) The size of the intake and exhaust valves (or ports).

(5)–(11) [Reserved]

(12) Those vehicles covered by an application for certification which are equipped with gasoline-fueled or methanol-fueled heavy-duty engines will be divided into groupings of vehicles on the basis of physical features which are expected to affect evaporative emissions. Each group of vehicles with similar features must be defined as a separate evaporative emission family.

(13) For gasoline-fueled or methanol-fueled heavy-duty vehicles to be classified in the same evaporative emission family, vehicles must be identical with respect to the items listed in paragraphs (a)(13) (i) and (ii) of this section.

(i) Method of fuel/air metering (that is, carburetion versus fuel injection).

(ii) Carburetor bowl fuel volume, within a 10 cc range.

(14) For vehicles equipped with gasoline-fueled or methanol-fueled heavy-duty engines to be classified in the same evaporative emission control system, vehicles must be identical with respect to the items listed in paragraphs (a)(14) (i) through (ix) of this section.

(i) Method of vapor storage.

(ii)–(iii) [Reserved] .

(iv) Vapor storage working capacity, within a 20g range.

(v) Number of storage devices.

(vi) Method of purging stored vapors.

(vii) [Reserved]

(viii) Liquid fuel hose material.

(ix) Vapor storage material.

(15) Where vehicles equipped with gasoline-fueled or methanol-fueled heavy-duty engines are types which cannot be divided into evaporative emission family-control system combinations based on the criteria listed above, the Administrator establishes evaporative emission family-control system combinations for those vehicles based on features most related to their evaporative emission characteristics.

(b) *Emission data.* (1) [Reserved]

(2) *Otto-cycle heavy-duty emission data engines.* This paragraph applies to Otto-cycle heavy-duty emission data engines.

(i)–(ii) [Reserved]

(iii) The Administrator selects a maximum of two engines within each engine family based upon features indicating that they may have the highest emission levels of the engines in the engine family in accordance with the criteria described in paragraphs (b)(2)(iii) (A) and (B) of this section.

(A) The Administrator selects one emission data engine first based on the largest displacement within the engine family. Then from those within the

largest displacement the Administrator selects, in the order listed, the engine with the highest fuel flow at the speed of maximum rated torque, with the most advanced spark timing, with no EGR or lowest EGR flow, and with no air pump or with the lowest actual flow air pump.

(B) The Administrator selects one additional engine from within each engine family. The engine selected is the engine expected to exhibit the highest emissions of those engines remaining in the engine family. If all engines within the engine family are similar, the Administrator may waive the requirements of this paragraph.

(iv) If the engines selected in accordance with paragraph (b)(2)(iii) of this section do not represent each engine displacement-exhaust emission control system combination, then the Administrator selects one engine of each engine displacement-exhaust emission control system combination not represented.

(v) Within an engine family/displacement/control system combination, the manufacturer may alter any emission data engine (or other engine including current or previous model year emission data engines and development engines provided they meet the emission data engines' protocol) to represent more than one selection under paragraph (b)(2)(iii) of this section.

(3) *Diesel heavy-duty emission data engines.* This paragraph applies to diesel-cycle heavy-duty emission data engines.

(i) Engines will be chosen to be run for emission data based upon engine family groupings. Within each engine family, the requirements of paragraphs (b)(3) (i) through (iv) of this section must be met.

(ii) Engines of each engine family will be divided into groups based upon their exhaust emission control systems. One engine of each engine system combination must be run for smoke emission data and gaseous emission data. Either the complete gaseous emission test or the complete smoke test may be conducted first. Within each combination, the engine that features the highest fuel feed per stroke, primarily at the speed of maximum rated torque and secondarily at rated speed, will usually be selected. If there are military engines with higher fuel rates than other engines in the same engine system combinations, then one military engine is also selected. The engine with the highest fuel feed per stroke is usually the one selected.

(iii) The Administrator may select a maximum of one additional engine within each engine-system combination based upon features indicating that it may have the highest emission levels of the engines of that combination. In selecting this engine, the Administrator will consider such features as the injection system, fuel system, compression ratio, rated speed, rated horsepower, peak torque speed, and peak torque.

(iv) Within an engine family control system combination, the manufacturer may alter any emission data engine (or other engine including current or previous model year emission data engines and development engines provided they meet the emission data engines' protocol) to represent more than one selection under paragraphs (b)(3) (ii) and (iii) of this section.

(c) *Durability data.* (1)–(2) [Reserved]

(3) *Heavy-duty engines.* This paragraph applies to engines, subsystems, or components used to establish exhaust emission deterioration factors for heavy-duty engines.

(i) The manufacturer must select the engines, subsystems, or components to be used to determine exhaust emission deterioration factors for each engine-family control system combination. Whether engines, subsystems, or components are used, they must be selected so that their emission deterioration characteristics may be expected to represent those of in-use engines, based on good engineering judgment.

(ii) [Reserved]

(d) [Reserved]

(e)(1) [Reserved]

(2) Any manufacturer may request to certify engine families with combined total sales of fewer than 10,000 light-duty vehicles, light-duty trucks, heavy-duty vehicles, and heavy-duty engines utilizing the procedures contained in § 86.094–14 for emission data vehicle selection and determination of deterioration factors. The deterioration factors are applied only to entire engine families.

(f) [Reserved]

[58 FR 58417, Nov. 1, 1993, as amended at 75 FR 22979, Apr. 30, 2010; 79 FR 23691, Apr. 28, 2014]

§ 86.098–2 Definitions.

The definitions of § 86.096–2 continue to apply to 1996 and later model year vehicles. The definitions listed in this section apply beginning with the 1998 model year.

Dispensed fuel temperature means the temperature (deg.F or deg.C may be used) of the fuel being dispensed into the tank of the test vehicle during a refueling test.

Evaporative/refueling emission control system means a unique combination within an evaporative/refueling family of canister adsorptive material, purge system configuration, purge strategy, and other parameters determined by the Administrator to affect evaporative and refueling emission control system durability or deterioration factors.

Evaporative/refueling emission family means the basic classification unit of a manufacturers' product line used for the purpose of evaporative and refueling emissions test fleet selection and determined in accordance with § 86.098–24.

Fixed liquid level gauge means a type of liquid level gauge used on liquefied petroleum gas-fueled vehicles which uses a relatively small positive shutoff valve and is designed to indicate when the liquid level in the fuel tank being filled reaches the proper fill level. The venting of fuel vapor and/or liquid fuel to the atmosphere during the refueling event is generally associated with the use of the fixed liquid level gauge.

Integrated refueling emission control system means a system where vapors resulting from refueling are stored in a common vapor storage unit(s) with other evaporative emissions of the vehicle and are purged through a common purge system.

Non-integrated refueling emission control system means a system where fuel vapors from refueling are stored in a vapor storage unit assigned solely to the function of storing refueling vapors.

Refueling emissions means evaporative emissions that emanate from a motor vehicle fuel tank(s) during a refueling operation.

Refueling emissions canister(s) means any vapor storage unit(s) that is exposed to the vapors generated during refueling.

Resting losses means evaporative emissions that may occur continuously, that are not diurnal emissions, hot soak emissions, refueling emissions, running losses, or spitback emissions.

Useful life means:

(1) For light-duty vehicles, and for light light-duty trucks not subject to the Tier 0 standards of § 86.094–9(a), intermediate useful life and/or full useful life. Intermediate useful life is a period of use of 5 years or 50,000 miles, whichever occurs first. Full useful life is a period of use of 10 years or 100,000 miles, whichever occurs first, except as otherwise noted in § 86.094–9. The useful life of evaporative and/or refueling emission control systems on the portion of these vehicles subject to the evaporative emission test requirements of § 86.130–96, and/or the refueling emission test requirements of § 86.151–98, is defined as a period of use of 10 years or 100,000 miles, whichever occurs first.

(2) For light light-duty trucks subject to the Tier 0 standards of § 86.094–9(a), and for heavy light-duty truck engine families, intermediate and/or full useful life. Intermediate useful life is a period of use of 5 years or 50,000 miles, whichever occurs first. Full useful life is a period of use of 11 years or 120,000 miles, whichever occurs first. The useful life of evaporative emission control systems on the portion of these vehicles subject to the evaporative emission test requirements of § 86.130–96 is also defined as a period of 11 years or 120,000 miles, whichever occurs first.

(3) For an Otto-cycle heavy-duty engine family:

(i) For hydrocarbon and carbon monoxide standards, a period of use of 8 years or 110,000 miles, whichever first occurs.

(ii) For the oxides of nitrogen standard, a period of use of 10 years or 110,000 miles, whichever first occurs.

(iii) For the portion of evaporative emission control systems subject to the evaporative emission test requirements of § 86.1230–96, a period of use of

10 years or 110,000 miles, whichever occurs first.

(4) For a diesel heavy-duty engine family:

(i) For light heavy-duty diesel engines, for hydrocarbon, carbon monoxide, and particulate standards, a period of use of 8 years or 110,000 miles, whichever first occurs.

(ii) For light heavy-duty diesel engines, for the oxides of nitrogen standard, a period of use of 10 years or 110,000 miles, whichever first occurs.

(iii) For medium heavy-duty diesel engines, for hydrocarbon, carbon monoxide, and particulate standards, a period of use of 8 years or 185,000 miles, whichever first occurs.

(iv) For medium heavy-duty diesel engines, for the oxides of nitrogen standard, a period of use of 10 years or 185,000 miles, whichever first occurs.

(v) For heavy heavy-duty diesel engines, for hydrocarbon, carbon monoxide, and particulate standards, a period of use of 8 years or 290,000 miles, whichever first occurs, except as provided in paragraph (3)(vii) of this definition.

(vi) For heavy heavy-duty diesel engines, for the oxides of nitrogen standard, a period of use of 10 years or 290,000 miles, whichever first occurs.

(vii) For heavy heavy-duty diesel engines used in urban buses, for the particulate standard, a period of use of 10 years or 290,000 miles, whichever first occurs.

[59 FR 16288, Apr. 6, 1994, as amended at 59 FR 48501, Sept. 21, 1994]

§ 86.098–3 Abbreviations.

(a) The abbreviations in § 86.096–3 continue to apply. The abbreviations in this section apply beginning with the 1998 model year.

(b) The abbreviations of this section apply to this subpart, and also to subparts B, E, F, G, K, M, N, and P of this part, and have the following meanings:

T_D—Dispensed fuel temperature
ABT—Averaging, banking, and trading
HDE—Heavy-duty engine

[62 FR 54716, Oct. 21, 1997]

§ 86.098–10 Emission standards for 1998 and later model year Otto-cycle heavy-duty engines and vehicles.

Section 86.098–10 includes text that specifies requirements that differ from § 86.096–10. Where a paragraph in § 86.096–10 is identical and applicable to § 86.098–10, this may be indicated by specifying the corresponding paragraph and the statement ''[Reserved]. For guidance see § 86.096–10.''

(a)(1) Except as provided for 2003 and 2004 model years in §§ 86.005–10(f) and 86.1816–05, exhaust emissions from new 1998 and later model year Otto-cycle heavy-duty engines shall not exceed:

(i) *For Otto-cycle heavy-duty engines fueled with either gasoline or liquefied petroleum gas,* and intended for use in all vehicles except as provided in paragraph (a)(3) of this paragraph.

(A) *Hydrocarbons.* 1.1 grams per brake horsepower-hour (0.41 gram per megajoule), as measured under transient operating conditions.

(B) *Carbon monoxide.* (*1*) 14.4 grams per brake horsepower-hour (5.36 grams per megajoule), as measured under transient operating conditions.

(*2*) *For Otto-cycle heavy-duty engines fueled with either gasoline or liquefied petroleum gas and utilizing aftertreatment technology:* 0.50 percent of exhaust gas flow at curb idle.

(C) *Oxides of nitrogen* (*1*) 4.0 grams per brake horsepower-hour (1.49 grams per megajoule), as measured under transient operating conditions.

(*2*) A manufacturer may elect to include any or all of its gasoline-fueled Otto-cycle HDE families in any or all of the NO_X or NO_X plus NMHC ABT programs for HDEs, within the restrictions described in § 86.098–15 as applicable. If the manufacturer elects to include engine families in any of these programs, the NO_X FELs may not exceed 5.0 grams per brake horsepower-hour (1.9 grams per megajoule). This ceiling value applies whether credits for the family are derived from averaging, trading or banking programs.

(*3*) A manufacturer may elect to include any or all of its liquified petroleum gas-fueled Otto-cycle HDE families in any or all of the NO_X or NO_X plus NMHC ABT programs for HDEs, within the restrictions described in

§ 86.098–15 as applicable. If the manufacturer elects to include engine families in any of these programs, the NO_X FELs may not exceed 5.0 grams per brake horsepower-hour (1.9 grams per megajoule). This ceiling value applies whether credits for the family are derived from averaging, trading or banking programs.

(ii) *For Otto-cycle heavy-duty engines fueled with either gasoline or liquefied petroleum gas*, and intended for use only in vehicles with a Gross Vehicle Weight Rating of greater than 14,000 pounds.

(A) *Hydrocarbons*. 1.9 grams per brake horsepower-hour (0.71 gram per megajoule), as measured under transient operating conditions.

(B) *Carbon Monoxide*. (*1*) 37.1 grams per brake horsepower-hour (13.8 grams per megajoule), as measured under transient operating conditions.

(*2*) *For Otto-cycle heavy-duty engines fueled with either gasoline or liquefied petroleum gas and utilizing aftertreatment technology:* 0.50 percent of exhaust gas flow at curb idle.

(C) *Oxides of nitrogen* (*1*) 4.0 grams per brake horsepower-hour (1.49 grams per megajoule), as measured under transient operating conditions.

(*2*) A manufacturer may elect to include any or all of its gasoline-fueled Otto-cycle HDE families in any or all of the NO_X or NO_X plus NMHC ABT programs for HDEs, within the restrictions described in § 86.098–15 as applicable. If the manufacturer elects to include engine families in any of these programs, the NO_X FELs may not exceed 5.0 grams per brake horsepower-hour (1.9 grams per megajoule). This ceiling value applies whether credits for the family are derived from averaging, trading or banking programs.

(*3*) A manufacturer may elect to include any or all of its liquified petroleum gas-fueled Otto-cycle HDE families in any or all of the NO_X or NO_X plus NMHC ABT programs for HDEs, within the restrictions described in § 86.098–15 as applicable. If the manufacturer elects to include engine families in any of these programs, the NO_X FELs may not exceed 5.0 grams per brake horsepower-hour (1.9 grams per megajoule). This ceiling value applies whether credits for the family are derived from averaging, trading or banking programs.

(iii) *For methanol-fueled Otto cycle heavy-duty engines* intended for use in all vehicles, except as provided in paragraph (a)(3) of this section.

(A) *Total Hydrocarbon Equivalent*. 1.1 gram per brake horsepower-hour (0.41 gram per megajoule), as measured under transient operating conditions.

(B) *Carbon monoxide*. (*1*) 14.4 grams per brake horsepower-hour (5.36 grams per megajoule), as measured under transient operating conditions.

(*2*) 0.50 percent of exhaust gas flow at curb idle.

(C) *Oxides of nitrogen*. (*1*) 4.0 grams per brake horsepower-hour (1.49 grams per megajoule), as measured under transient operating conditions.

(*2*) A manufacturer may elect to include any or all of its methanol-fueled Otto-cycle HDE families in any or all of the NO_X or NO_X plus NMHC ABT programs for HDEs, within the restrictions described in § 86.098–15 as applicable. If the manufacturer elects to include engine families in any of these programs, the NO_X FELs may not exceed 5.0 grams per brake horsepower-hour (1.9 grams per megajoule). This ceiling value applies whether credits for the family are derived from averaging, trading or banking programs.

(iv) *For methanol-fueled Otto-cycle heavy-duty engines* intended for use only in vehicles with a Gross Vehicle Weight Rating of greater than 14,000 lbs.

(A) *Total Hydrocarbon Equivalent*. 1.9 grams per brake horsepower-hour (0.71 gram per megajoule), as measured under transient operating conditions.

(B) *Carbon monoxide*. (*1*) 37.1 grams per brake horsepower-hour (13.8 grams per megajoule), as measured under transient operating conditions.

(*2*) 0.50 percent of exhaust gas flow at curb idle.

(C) *Oxides of nitrogen*. (*1*) 4.0 grams per brake horsepower-hour (1.49 grams per megajoule), as measured under transient operating conditions.

(*2*) A manufacturer may elect to include any or all of its methanol-fueled Otto-cycle HDE families in any or all

of the NO_X or NO_X plus NMHC ABT programs for HDEs, within the restrictions described in § 86.098–15 as applicable. If the manufacturer elects to include engine families in any of these programs, the NO_X FELs may not exceed 5.0 grams per brake horsepower-hour (1.9 grams per megajoule). This ceiling value applies whether credits for the family are derived from averaging, trading or banking programs.

(v) *For natural gas-fueled Otto-cycle heavy-duty engines* intended for use in all vehicles except as provided in paragraph (a)(3) of this section.

(A) *Nonmethane hydrocarbons.* 0.9 gram per brake horsepower-hour (0.33 gram per megajoule), as measured under transient operating conditions.

(B) *Carbon monoxide.* (*1*) 14.4 grams per brake horsepower-hour (5.36 grams per megajoule), as measured under transient operating conditions.

(*2*) *For natural gas-fueled Otto-cycle heavy-duty engines utilizing aftertreatment technology.* 0.50 percent of exhaust flow at curb idle.

(C) *Oxides of nitrogen.* (*1*) 5.0 grams per brake horsepower-hour (1.9 grams per megajoule), as measured under transient operating conditions.

(*2*) A manufacturer may elect to include any or all of its natural gas-fueled Otto-cycle HDE families in any or all of the NO_X or NO_X plus NMHC ABT programs for HDEs, within the restrictions described in § 86.098–15 as applicable. If the manufacturer elects to include engine families in any of these programs, the NO_X FELs may not exceed 5.0 grams per brake horsepower-hour (1.9 grams per megajoule). This ceiling value applies whether credits for the family are derived from averaging, trading or banking programs.

(vi) For *natural gas-fueled Otto-cycle engines* intended for use only in vehicles with a Gross Vehicle Weight Rating of greater than 14,000 pounds.

(A) *Nonmethane hydrocarbons.* 1.7 grams per brake horsepower-hour (0.63 gram per megajoule), as measured under transient operating conditions.

(B) *Carbon monoxide.* (*1*) 37.1 grams per brake horsepower-hour (13.8 grams per megajoule), as measured under transient operating conditions.

(*2*) *For natural gas-fueled Otto-cycle heavy-duty engines utilizing aftertreatment technology.* 0.50 percent of exhaust gas flow at curb idle.

(C) *Oxides of nitrogen.* (*1*) 5.0 grams per brake horsepower-hour (1.9 grams per megajoule), as measured under transient operating conditions.

(*2*) A manufacturer may elect to include any or all of its natural gas-fueled Otto-cycle HDE families in any or all of the NO_X or NO_X plus NMHC ABT programs for HDEs, within the restrictions described in § 86.098–15 as applicable. If the manufacturer elects to include engine families in any of these programs, the NO_X FELs may not exceed 5.0 grams per brake horsepower-hour (1.9 grams per megajoule). This ceiling value applies whether credits for the family are derived from averaging, trading or banking programs.

(2) The standards set forth in paragraph (a)(1) of this section refer to the exhaust emitted over the operating schedule set forth in paragraph (f)(1) of appendix I to this part, and measured and calculated in accordance with the procedures set forth in subpart N or P of this part.

(3)(i) A manufacturer may certify one or more Otto-cycle heavy-duty engine configurations intended for use in all vehicles to the emission standards set forth in paragraphs (a)(1)(ii), (a)(1)(iv) or (a)(1)(vi) of this paragraph: *Provided,* that the total model year sales of such configuration(s), segregated by fuel type, being certified to the emission standards in paragraph (a)(1)(ii) of this section represent no more than five percent of total model year sales of each fuel type Otto-cycle heavy-duty engine intended for use in vehicles with a Gross Vehicle Weight Rating of up to 14,000 pounds by the manufacturer.

(ii) The configurations certified to the emission standards of paragraphs (a)(1) (ii) and (vi) of this section under the provisions of paragraph (a)(3)(i) of this section shall still be required to meet the evaporative emission standards set forth in paragraphs § 86.096–10(b)(1)(i), (b)(2)(i) and (b)(3)(i).

(iii) The configurations certified to the emission standards of paragraphs (a)(1) (ii) and (iv) of this section under the provisions of paragraphs (a)(3) (i) and (ii) of this section shall still be required to meet the evaporative emission standards set forth in paragraphs

(b)(1)(i), (b)(2)(i), and (b)(3)(i) of this section.

(b) [Reserved]

(c) No crankcase emissions shall be discharged into the ambient atmosphere from any new 1998 or later model year Otto-cycle heavy-duty engine.

(d) Every manufacturer of new motor vehicle engines subject to the standards prescribed in this section shall, prior to taking any of the actions specified in section 203(a)(1) of the Act, test or cause to be tested motor vehicle engines in accordance with applicable procedures in subpart N or P of this part to ascertain that such test engines meet the requirements of paragraphs (a) and (c) of this section.

[58 FR 15800, Mar. 24, 1993, as amended at 59 FR 48501, Sept. 21, 1994; 62 FR 54716, Oct. 21, 1997; 65 FR 59955, Oct. 6, 2000; 75 FR 22979, Apr. 30, 2010]

§ 86.098–23 Required data.

(a) The manufacturer shall perform the tests required by the applicable test procedures and submit to the Administrator the information described in paragraphs (b) through (m) of this section, provided, however, that if requested by the manufacturer, the Administrator may waive any requirement of this section for testing of a vehicle (or engine) for which emission data are available or will be made available under the provisions of § 86.091–29.

(b) *Durability data.* (1)(i) [Reserved]

(ii) The manufacturer shall submit exhaust emission deterioration factors for light-duty trucks and HDEs and all test data that are derived from the testing described under § 86.094–21(b)(5)(i)(A), as well as a record of all pertinent maintenance. Such testing shall be designed and conducted in accordance with good engineering practice to assure that the engines covered by a certificate issued under § 86.098–30 will meet each emission standard (or family emission limit, as appropriate) in § 86.094–9, § 86.098–10, § 86.098–11 or superseding emissions standards sections as appropriate, in actual use for the useful life applicable to that standard.

(2) [Reserved]

(3) For heavy-duty vehicles equipped with gasoline-fueled or methanol-fueled engines, the manufacturer shall submit evaporative emission deterioration factors for each evaporative emission family-evaporative emission control system combination identified in accordance with § 86.094–21(b)(4)(ii). Furthermore, a statement that the test procedure(s) used to derive the deterioration factors includes, but need not be limited to, a consideration of the ambient effects of ozone and temperature fluctuations, and the service accumulation effects of vibration, time, and vapor saturation and purge cycling. The deterioration factor test procedure shall be designed and conducted in accordance with good engineering practice to assure that the vehicles covered by a certificate issued under § 86.098–30 will meet the evaporative emission standards in §§ 86.096–10 and 86.098–11 or superseding emissions standards sections as applicable in actual use for the useful life of the engine. Furthermore, a statement that a description of the test procedure, as well as all data, analyses, and evaluations, is available to the Administrator upon request.

(4)(i) For heavy-duty vehicles with a Gross Vehicle Weight Rating of up to 26,000 lbs and equipped with gasoline-fueled or methanol-fueled engines, the manufacturer shall submit a written statement to the Administrator certifying that the manufacturer's vehicles meet the standards of § 86.098–10 or § 86.098–11 or superseding emissions standards sections as applicable as determined by the provisions of § 86.098–28. Furthermore, the manufacturer shall submit a written statement to the Administrator that all data, analyses, test procedures, evaluations, and other documents, on which the requested statement is based, are available to the Administrator upon request.

(ii) For heavy-duty vehicles with a Gross Vehicle Weight Rating of greater than 26,000 lbs and equipped with gasoline-fueled or methanol-fueled engines, the manufacturer shall submit a written statement to the Administrator certifying that the manufacturer's evaporative emission control systems are designed, using good engineering practice, to meet the standards of § 86.096–10 or § 86.098–11 or superseding emissions standards sections as applicable as determined by the provisions

of § 86.098–28. Furthermore, the manufacturer shall submit a written statement to the Administrator that all data, analyses, test procedures, evaluations, and other documents, on which the requested statement is based, are available to the Administrator upon request.

(iii) For petroleum-fueled diesel-cycle vehicles certifying under the waiver provisions of § 86.098–28, the certifications and representations specified in § 86.098–28.

(c) [Reserved]

(d) The manufacturer shall submit a statement that the vehicles (or engines) for which certification is requested conform to the requirements in § 86.090–5(b), and that the descriptions of tests performed to ascertain compliance with the general standards in § 86.090–5(b), and that the data derived from such tests, are available to the Administrator upon request.

(e)(1) The manufacturer shall submit a statement that the test vehicles (or test engines) for which data are submitted to demonstrate compliance with the applicable standards (or family emission limits, as appropriate) of this subpart are in all material respects as described in the manufacturer's application for certification, that they have been tested in accordance with the applicable test procedures utilizing the fuels and equipment described in the application for certification, and that on the basis of such tests the vehicles (or engines) conform to the requirements of this part. If such statements cannot be made with respect to any vehicle (or engine) tested, the vehicle (or engine) shall be identified, and all pertinent data relating thereto shall be supplied to the Administrator. If, on the basis of the data supplied and any additional data as required by the Administrator, the Administrator determines that the test vehicles (or test engine) were not as described in the application for certification or were not tested in accordance with the applicable test procedures utilizing the fuels and equipment as described in the application for certification, the Administrator may make the determination that the vehicle (or engine) does not meet the applicable standards (or family emission limits, as appropriate). The provisions of § 86.098–30(b) shall then be followed.

(2)–(3) [Reserved

(f)–(g) [Reserved]

(h) Additionally, manufacturers participating in any of the emissions ABT programs under § 86.098–15 or superseding ABT sections for HDEs shall submit for each participating family the items listed in paragraphs (h) (1) through (3) of this section.

(1) *Application for certification.* (i) The application for certification will include a statement that the engines for which certification is requested will not, to the best of the manufacturer's belief, when included in any of the ABT programs, cause the applicable emissions standard(s) to be exceeded.

(ii) The application for certification will also include identification of the section of this subpart under which the family is participating in ABT (i.e., § 86.098–15 or superseding ABT sections), the type (NOX, NO_X + NMHC, or particulate) and the projected number of credits generated/needed for this family, the applicable averaging set, the projected U.S. (49-state or 50 state, as applicable) production volumes, by quarter, NCPs in use on a similar family and the values required to calculate credits as given in the applicable ABT section. Manufacturers shall also submit how and where credit surpluses are to be dispersed and how and through what means credit deficits are to be met, as explained in the applicable ABT section. The application must project that each engine family will be in compliance with the applicable emission standards based on the engine mass emissions and credits from averaging, trading and banking.

(2) [Reserved]

(3) *End-of-year report.* The manufacturer shall submit end-of-year reports for each engine family participating in any of the ABT programs, as described in paragraphs (h)(3)(i) through (iv) of this section.

(i) These reports shall be submitted within 90 days of the end of the model year to: Director, Engine Programs and Compliance Division (6405J), U.S. Environmental Protection Agency, 1200 Pennsylvania Ave., NW., Washington, DC 20460.

(ii) These reports shall indicate the engine family, the averaging set, the actual U.S. (49-state or 50-state, as applicable) production volume, the values required to calculate credits as given in the applicable ABT section, the resulting type and number of credits generated/required, and the NCPs in use on a similar NCP family. Manufacturers shall also submit how and where credit surpluses were dispersed (or are to be banked) and how and through what means credit deficits were met. Copies of contracts related to credit trading must also be included or supplied by the broker if applicable. The report shall also include a calculation of credit balances to show that net mass emissions balances are within those allowed by the emission standards (equal to or greater than a zero credit balance). Any credit discount factor described in the applicable ABT section must be included as required.

(iii) The production counts for end-of-year reports shall be based on the location of the first point of retail sale (e.g., customer, dealer, secondary manufacturer) by the manufacturer.

(iv) Errors discovered by EPA or the manufacturer in the end-of-year report, including changes in the production counts, may be corrected up to 180 days subsequent to submission of the end-of-year report. Errors discovered by EPA after 180 days shall be corrected if credits are reduced. Errors in the manufacturer's favor will not be corrected if discovered after the 180 day correction period allowed.

(i) Failure by a manufacturer participating in the ABT programs to submit any quarterly or end-of-year report (as applicable) in the specified time for all vehicles and engines that are part of an averaging set is a violation of section 203(a)(1) of the Clean Air Act (42 U.S.C. 7522(a)(1)) for each such vehicle and engine.

(j) Failure by a manufacturer generating credits for deposit only in the HDE banking programs to submit their end-of-year reports in the applicable specified time period (i.e., 90 days after the end of the model year) shall result in the credits not being available for use until such reports are received and reviewed by EPA. Use of projected credits pending EPA review will not be permitted in these circumstances.

(k) Engine families certified using NCPs are not required to meet the requirements outlined in paragraphs (f) through (j) of this section.

(l) [Reserved]

(m) Additionally, except for small-volume manufacturers, manufacturers certifying vehicles shall submit for each model year 1998 light-duty vehicle, light-duty truck, and gasoline- and methanol-fueled heavy-duty vehicle evaporative family:

(1) In the application for certification the projected sales volume of evaporative families certifying to the respective evaporative test procedure and accompanying standards as set forth or otherwise referenced in §§ 86.090–8, 86.090–9, 86.091–10 and 86.094–11 or as set forth or otherwise referenced in §§ 86.096–8, 86.096–9, 86.096–10 and 86.098–11 or as set forth or otherwise referenced in superseding emissions standards sections. Volume projected to be produced for U.S. sale may be used in lieu of projected U.S. sales.

(2) End-of-year reports for each evaporative family.

(i) These end-of-year reports shall be submitted within 90 days of the end of the model year to: For heavy-duty engines—Director, Engine Programs and Compliance Divisions (6403J), For vehicles—Director, Vehicle Compliance and Programs Division (6405J), U.S. Environmental Protection Agency, 1200 Pennsylvania Ave., NW., Washington, DC 20460.

(ii) These reports shall indicate the model year, evaporative family and the actual U.S. sales volume. The manufacturer may petition the Administrator to allow volume produced for U.S. sale to be used in lieu of U.S. sales. Such petition shall be submitted within 30 days of the end of the model year to the Manufacturers Operations Division. For the petition to be granted, the manufacturer must establish to the satisfaction of the Administrator that production volume is functionally equivalent to sales volume.

(iii) The U.S. sales volume for end-of-year reports shall be based on the location of the point of sale to a dealer, distributor, fleet operator, broker, or any

other entity that comprises the point of first sale.

(iv) Failure by a manufacturer to submit the end-of-year report within the specified time may result in certificate(s) for the evaporative family(ies) being voided ab initio plus any applicable civil penalties for failure to submit the required information to the Agency.

(v) The information shall be organized in such a way as to allow the Administrator to determine compliance with the Evaporative Emission Testing implementation schedules of §§ 86.096–8, 86.096–9, 86.096–10 and 86.098–11.

[58 FR 16025, Mar. 24, 1993, as amended at 58 FR 34536, June 28, 1993; 59 FR 16290, Apr. 6, 1994; 62 FR 54717, Oct. 21, 1997; 75 FR 22979, Apr. 30, 2010; 79 FR 23691, Apr. 28, 2014]

§ 86.099–10 Emission standards for 1999 and later model year Otto-cycle heavy-duty engines and vehicles.

Section 86.099–10 includes text that specifies requirements that differ from § 86.098–10. Where a paragraph in § 86.98–10 is identical and applicable to § 86.099–10, this may be indicated by specifying the corresponding paragraph and the statement ''[Reserved]. For guidance see § 86.098–10.''

(a) [Reserved]. For guidance see § 86.098–10.

(b) Evaporative emissions from heavy-duty vehicles shall not exceed the following standards. The standards apply equally to certification and in-use vehicles. The spitback standard also applies to newly assembled vehicles. For certification vehicles only, manufacturers may conduct testing to quantify a level of nonfuel background emissions for an individual test vehicle. Such a demonstration must include a description of the source(s) of emissions and an estimated decay rate. The demonstrated level of nonfuel background emissions may be subtracted from emission test results from certification vehicles if approved in advance by the Administrator.

(1) *Hydrocarbons (for vehicles equipped with gasoline-fueled, natural gas-fueled or liquefied petroleum gas-fueled engines).* (i) For vehicles with a Gross Vehicle Weight Rating of up to 14,000 lbs:

(A)(*1*) For the full three-diurnal test sequence described in § 86.1230–96, diurnal plus hot soak measurements: 3.0 grams per test.

(*2*) For the supplemental two-diurnal test sequence described in § 86.1230–96, diurnal plus hot soak measurements (gasoline-fueled vehicles only): 3.5 grams per test.

(B) Running loss test (gasoline-fueled vehicles only): 0.05 grams per mile.

(C) Fuel dispensing spitback test (gasoline-fueled vehicles only): 1.0 gram per test.

(ii) For vehicles with a Gross Vehicle Weight Rating of greater than 14,000 lbs:

(A)(*1*) For the full three-diurnal test sequence described in § 86.1230–96, diurnal plus hot soak measurements: 4.0 grams per test.

(*2*) For the supplemental two-diurnal test sequence described in § 86.1230–96, diurnal plus hot soak measurements (gasoline-fueled vehicles only): 4.5 grams per test.

(B) Running loss test (gasoline-fueled vehicles only): 0.05 grams per mile.

(2) *Total Hydrocarbon Equivalent (for vehicles equipped with methanol-fueled engines).* (i) For vehicles with a Gross Vehicle Weight Rating of up to 14,000 lbs:

(A)(*1*) For the full three-diurnal test sequence described in § 86.1230–96, diurnal plus hot soak measurements: 3.0 grams carbon per test.

(*2*) For the supplemental two-diurnal test sequence described in § 86.1230–96, diurnal plus hot soak measurements: 3.5 grams carbon per test.

(B) Running loss test: 0.05 grams carbon per mile.

(C) Fuel dispensing spitback test: 1.0 gram carbon per test.

(ii) For vehicles with a Gross Vehicle Weight Rating of greater than 14,000 lbs:

(A)(*1*) For the full three-diurnal test sequence described in § 86.1230–96, diurnal plus hot soak measurements: 4.0 grams carbon per test.

(*2*) For the supplemental two-diurnal test sequence described in § 86.1230–96, diurnal plus hot soak measurements: 4.5 grams carbon per test.

(B) Running loss test: 0.05 grams carbon per mile.

(3)(i) For vehicles with a Gross Vehicle Weight Rating of up to 26,000 lbs, the standards set forth in paragraphs (b)(1) and (b)(2) of this section refer to a composite sample of evaporative emissions collected under the conditions and measured in accordance with the procedures set forth in subpart M of this part.

(ii) For vehicles with a Gross Vehicle Weight Rating of greater than 26,000 lbs., the standards set forth in paragraphs (b)(1)(ii) and (b)(2)(ii) of this section refer to the manufacturer's engineering design evaluation using good engineering practice (a statement of which is required in § 86.091–23(b)(4)(ii)).

(4) All fuel vapor generated in a gasoline- or methanol-fueled heavy-duty vehicle during in-use operations shall be routed exclusively to the evaporative control system (e.g., either canister or engine purge). The only exception to this requirement shall be for emergencies.

(c)–(d) [Reserved]. For guidance see § 86.098–10.

(e) The standards described in this section do not apply to Otto-cycle medium-duty passenger vehicles (MDPVs) that are subject to regulation under subpart S of this part, except as specified in subpart S of this part. The standards described in this section also do not apply to Otto-cycle engines used in such MDPVs, except as specified in subpart S of this part. The term ''medium-duty passenger vehicle'' is defined in § 86.1803.

[58 FR 16026, Mar. 24, 1993, as amended at 59 FR 48503, Sept. 21, 1994; 60 FR 43888, Aug. 23, 1995; 65 FR 6848, Feb. 10, 2000]

§ 86.099–11 Emission standards for 1999 and later model year diesel heavy-duty engines and vehicles.

(a) Exhaust emissions from new 1999 and later model year diesel heavy-duty engines shall not exceed the following:

(1)(i) *Hydrocarbons (for diesel engines fueled with either petroleum-fuel or liquefied petroleum gas).* 1.3 grams per brake horsepower-hour (0.48 gram per megajoule), as measured under transient operating conditions.

(ii) *Total Hydrocarbon Equivalent (for methanol-fueled diesel engines).* 1.3 grams per brake horsepower-hour (0.48 gram per megajoule), as measured under transient operating conditions.

(iii) *Nonmethane hydrocarbons (for natural gas-fueled diesel engines).* 1.2 grams per brake horsepower-hour (0.45 gram per megajoule), as measured under transient operating conditions.

(2) *Carbon monoxide.* (i) 15.5 grams per brake horsepower-hour (5.77 grams per megajoule), as measured under transient operating conditions.

(ii) 0.50 percent of exhaust gas flow at curb idle (methanol-, natural gas-, and liquefied petroleum gas-fueled diesel only).

(3) *Oxides of Nitrogen.* (i) 4.0 grams per brake horsepower-hour (1.49 grams per megajoule), as measured under transient operating conditions.

(ii) A manufacturer may elect to include any or all of its diesel HDE families in any or all of the NO_X or NO_X plus NMHC ABT programs for HDEs, within the restrictions described in § 86.098–15 as applicable. If the manufacturer elects to include engine families in any of these programs, the NO_X FELs may not exceed 5.0 grams per brake horsepower-hour (1.9 grams per megajoule). This ceiling value applies whether credits for the family are derived from averaging, trading or banking programs.

(4) *Particulate.* (i) For diesel engines to be used in urban buses, 0.05 gram per brake horsepower-hour (0.019 gram per megajoule) for certification testing and selective enforcement audit testing, and 0.07 gram per brake horsepower-hour (0.026 gram per megajoule) for in-use testing, as measured under transient operating conditions.

(ii) For all other diesel engines only, 0.10 gram per brake horsepower-hour (0.037 gram per megajoule), as measured under transient operating conditions.

(iii) A manufacturer may elect to include any or all of its diesel HDE families in any or all of the particulate ABT programs for HDEs, within the restrictions described in § 86.098–15 as applicable. If the manufacturer elects to include engine families in any of these programs, the particulate FEL may not exceed:

(A) For engine families intended for use in urban buses, 0.25 gram per brake

horsepower-hour (0.093 gram per megajoule);

(B) For engine families *not* intended for use in urban buses, 0.60 gram per brake horsepower-hour (0.22 gram per megajoule). This ceiling value applies whether credits for the family are derived from averaging, trading or banking programs.

(b)(1) The opacity of smoke emission from new 1999 and later model year diesel heavy-duty engine shall not exceed:

(i) 20 percent during the engine acceleration mode.

(ii) 15 percent during the engine lugging mode.

(iii) 50 percent during the peaks in either mode.

(2) The standards set forth in paragraph (b)(1) of this section refer to exhaust smoke emissions generated under the conditions set forth in subpart I of this part and measured and calculated in accordance with those procedures.

(3) Evaporative emissions (total of non-oxygenated hydrocarbons plus methanol) from heavy-duty vehicles equipped with methanol-fueled diesel engines shall not exceed the following standards. The standards apply equally to certification and in-use vehicles. The spitback standard also applies to newly assembled vehicles.

(i) For vehicles with a Gross Vehicle Weight Rating of up to 14,000 lbs:

(A)(*1*) For the full three-diurnal test sequence described in § 86.1230–96, diurnal plus hot soak measurements: 3.0 grams per test.

(*2*) For the supplemental two-diurnal test sequence described in § 86.1230–96, diurnal plus hot soak measurements: 3.5 grams per test.

(B) *Running loss test:* 0.05 grams per mile.

(C) *Fuel dispensing spitback test:* 1.0 gram per test.

(ii) For vehicles with a Gross Vehicle Weight Rating of greater than 14,000 lbs:

(A)(*1*) For the full three-diurnal test sequence described in § 86.1230–96, diurnal plus hot soak measurements: 4.0 grams per test.

(*2*) For the supplemental two-diurnal test sequence described in § 86.1230–96, diurnal plus hot soak measurements: 4.5 grams per test.

(B) Running loss test: 0.05 grams per mile.

(iii)(A) For vehicles with a Gross Vehicle Weight Rating of up to 26,000 lbs, the standards set forth in paragraph (b)(3) of this section refer to a composite sample of evaporative emissions collected under the conditions and measured in accordance with the procedures set forth in subpart M of this part. For certification vehicles only, manufacturers may conduct testing to quantify a level of nonfuel background emissions for an individual test vehicle. Such a demonstration must include a description of the source(s) of emissions and an estimated decay rate. The demonstrated level of nonfuel background emissions may be subtracted from emission test results from certification vehicles if approved in advance by the Administrator.

(B) For vehicles with a Gross Vehicle Weight Rating of greater than 26,000 lbs., the standards set forth in paragraph (b)(3)(ii) of this section refer to the manufacturer's engineering design evaluation using good engineering practice (a statement of which is required in § 86.091–23(b)(4)(ii)).

(iv) All fuel vapor generated during in-use operations shall be routed exclusively to the evaporative control system (e.g., either canister or engine purge). The only exception to this requirement shall be for emergencies.

(4) *Evaporative emissions* from 1999 and later model year heavy-duty vehicles equipped with natural gas-fueled or liquefied petroleum gas-fueled heavy-duty engines shall not exceed the following standards. The standards apply equally to certification and in-use vehicles.

(i) For vehicles with a Gross Vehicle Weight Rating of up to 14,000 pounds for the full three-diurnal test sequence described in § 86.1230–96, diurnal plus hot soak measurements: 3.0 grams per test.

(ii) For vehicles with a Gross Vehicle Weight Rating of greater than 14,000 pounds for the full three-diurnal test sequence described in § 86.1230–96, diurnal plus hot soak measurements: 4.0 grams per test.

(iii)(A) For vehicles with a Gross Vehicle Weight Rating of up to 26,000 pounds, the standards set forth in paragraph (b)(4) of this section refer to a

composite sample of evaporative emissions collected under the conditions set forth in subpart M of this part and measured in accordance with those procedures.

(B) For vehicles with a Gross Vehicle Weight Rating greater than 26,000 pounds, the standards set forth in paragraphs (b)(3)(ii) and (b)(4)(ii) of this section refer to the manufacturer's engineering design evaluation using good engineering practice (a statement of which is required in § 86.091–23(b)(4)(ii)).

(c) No crankcase emissions shall be discharged into the ambient atmosphere from any new 1999 or later model year methanol-, natural gas-, or liquefied petroleum gas-fueled diesel, or any naturally-aspirated diesel heavy-duty engine. For petroleum-fueled engines only, this provision does not apply to engines using turbochargers, pumps, blowers, or superchargers for air induction.

(d) Every manufacturer of new motor vehicle engines subject to the standards prescribed in this section shall, prior to taking any of the actions specified in section 203(a)(1) of the Act, test or cause to be tested motor vehicle engines in accordance with applicable procedures in subpart I or N of this part to ascertain that such test engines meet the requirements of paragraphs (a), (b), (c), and (d) of this section.

[58 FR 34537, June 28, 1993, as amended at 59 FR 48503, Sept. 21, 1994; 60 FR 43888, Aug. 23, 1995; 62 FR 54720, Oct. 21, 1997]

Subpart B—Emission Regulations for 1977 and Later Model Year New Light-Duty Vehicles and New Light-Duty Trucks and New Otto-Cycle Complete Heavy-Duty Vehicles; Test Procedures

SOURCE: 42 FR 32954, June 28, 1977, unless otherwise noted.

§ 86.101 General applicability.

(a) *General provisions.* This subpart describes test procedures for measuring exhaust, evaporative, and refueling emissions from motor vehicles subject to emission standards under subpart S of this part. This generally includes light-duty vehicles, light-duty trucks, and complete heavy-duty vehicles at or below 14,000 pounds GVWR. The following provisions apply for all testing under this subpart:

(1) Provisions of this subpart apply to tests performed by both the Administrator and manufacturers.

(2) References in this subpart to engine families and emission control systems apply to durability groups and test groups as applicable.

(3) Except as noted, heavy-duty vehicles are subject to all the same provisions of this subpart that apply to light-duty trucks.

(4) The procedures in this subpart apply for testing vehicles powered by any fuel, except as specified in subpart S of this part.

(5) For exhaust emission testing, measure emissions for all pollutants with an applicable emission standard.

(6) All emission control systems designed for production vehicles must be functioning during testing. Maintenance to correct component malfunction or failure must be authorized in accordance with § 86.1834.

(7) The test sequence for the Federal Test Procedure (FTP) includes steps to precondition vehicles for evaporative emission measurements; these steps are required for exhaust testing whether or not testing includes evaporative emission measurements.

(8) Evaporative emission measurement procedures of this subpart include specifications for testing methanol-fueled vehicles. For vehicles fueled with other oxygenated fuels, use good engineering judgment to apply these procedures. For example, if you are testing an ethanol-fueled vehicle, perform diagnostics in your evaporative emission enclosure with ethanol and propane.

(9) For exhaust emission testing with ethanol-gasoline blends that have less than 25% ethanol by volume, if you use NMHC-to-NMOG conversion factors instead of measuring oxygenates as described in 40 CFR 1066.635, the testing specifications and diagnostic requirements in this part 86 that are specific to ethanol-gasoline blends do not apply.

(b) *Migration to 40 CFR parts 1065 and 1066.* This subpart transitions to rely

on the test procedure specifications in 40 CFR parts 1065 and 1066 as follows:

(1) Through model year 2021, manufacturers may use the test procedures specified in paragraph (c) or (d) of this section or, using good engineering judgement, elements of both. For any EPA testing before model year 2022, EPA will use the manufacturer's selected procedures for applying acceptable speed-tolerance criteria (either § 86.115–78 or 40 CFR 1066.425(c)). For any other parameters, EPA may conduct testing using either of the specified procedures. As allowed under this part, manufacturers may use carryover data from previous model years to demonstrate compliance with emission standards, without regard to the provisions of this section.

(2) Manufacturers must use the following procedures before model year 2022:

(i) For vehicles certified to any of the Tier 3 emission standards specified in subpart S of this part, determine overall driver accuracy based on drive-cycle metrics as described in 40 CFR 1066.425(j).

(ii) Equipment specifications and measurement procedures that are specific to PM emissions from 40 CFR part 1066 apply for any vehicles certified to the Tier 3 PM emission standards specified in subpart S of this part.

(iii) Use 40 CFR 1066.635 to determine NMOG for any vehicles certified to the Tier 3 NMOG + NO_X emission standards in subpart S of this part.

(3) For model years 2022 and later, manufacturers must use the test procedures specified in paragraph (d) of this section. Manufacturers may continue to use data based on the test procedures specified in paragraph (c) of this section for an engine family in 2022 and later model years, as long as the engine family is eligible for certification with carryover emission data.

(c) *Interim procedures*. Test vehicles as described in this subpart for the appropriate model year, through model year 2021, as follows:

(1) Sections 86.106 through 86.115 set forth general testing specifications and equipment requirements. Sections 86.116 through 86.126 discuss calibration methods and frequency. Sections 86.127 through 86.145 describe procedures for measuring exhaust and evaporative emissions. Sections 86.146 through 86.157 lay out refueling test procedures. Sections 86.158 through 86.166 cover procedures related to the Supplemental Federal Test Procedure and testing related to air conditioning systems. The test procedure for measuring fuel system leaks is described in 40 CFR 1066.985.

(2) Alternate equipment, procedures, and calculation methods may be used if shown to yield equivalent or superior results, and if approved in advance by the Administrator.

(d) *Long-term procedures*. Test vehicles as described in 40 CFR parts 1065 and 1066. The following requirements from this subpart also apply:

(1) Use fuel for testing and service accumulation as specified in § 86.113.

(2) Perform evaporative emission tests as follows:

(i) Use evaporative testing equipment meeting the specifications in § 86.107. This equipment must meet calibration requirements as specified in § 86.117.

(ii) Generate fuel test temperature profiles as described in § 86.129–94(d).

(iii) Follow the general provisions and driving schedules described in 40 CFR part 1066, subpart I. Evaporative testing consists of vehicle preconditioning as described in § 86.132, diurnal measurement as described in § 86.133, running loss testing as described in § 86.134, and hot soak testing as described in § 86.138.

(iv) Calculate emission results as described in § 86.143.

(3) Keep records as described in § 86.142

(4) Perform refueling emission tests, calculate emission results, and keep associated records as described in § 86.146 through 86.157.

[79 FR 23691, Apr. 28, 2014, as amended at 80 FR 9102, Feb. 19, 2015]

§ 86.102 Definitions.

The definitions in § 86.1803 apply to this subpart.

[79 FR 23692, Apr. 28, 2014]

§ 86.103 Abbreviations.

The abbreviations in subpart A apply to this subpart.

[45 FR 14508, Mar. 5, 1980]

§ 86.104 Section numbering; construction.

(a) The model year of initial applicability is indicated by the section number. The two digits following the hyphen designate the first model year for which a section is effective. A section remains effective until superseded.

Example. Section 86.111–78 applies to the 1978 and subsequent model years until superseded. If a § 86.111–81 is promulgated it would take effect beginning with the 1981 model year; § 86.111–78 would apply to model years 1978 through 1980.

(b) A section reference without a model year suffix refers to the section applicable for the appropriate model year.

(c) Unless indicated otherwise, all provisions in this subpart apply to petroleum-fueled, natural gas-fueled, liquefied petroleum gas-fueled and methanol-fueled vehicles.

[42 FR 32954, June 28, 1977. Redesignated at 45 FR 14508, Mar. 5, 1980, as amended at 54 FR 14499, Apr. 11, 1989; 59 FR 48504, Sept. 21, 1994]

§ 86.105 Introduction; structure of subpart.

(a) This subpart describes the equipment required and the procedures to follow in order to perform gaseous exhaust, particulate, and evaporative emission tests on light-duty vehicles and light-duty trucks. Subpart A of this part sets forth testing requirements and test intervals necessary to comply with EPA certification procedures. Not all emission measurement techniques described in this subpart will be necessary for all vehicles. Subpart A of this part defines the conditions under which vehicles may be exempted from measuring methane and/or waived from measuring particulate matter.

(b) Three topics are addressed in this subpart. Sections 86.106 through 86.115 set forth specifications and equipment requirements; §§ 86.116 through 86.126 discuss calibration methods and frequency; test procedures and data requirements are listed in §§ 86.127 through 86.157.

[56 FR 25760, June 5, 1991, as amended at 59 FR 16295, Apr. 6, 1994; 59 FR 48504, Sept. 21, 1994]

§ 86.106–96 Equipment required; overview.

(a) This subpart contains procedures for exhaust emission tests on petroleum-fueled, natural gas-fueled, liquefied petroleum gas-fueled, and methanol-fueled light-duty vehicles and light-duty trucks, and for evaporative emission tests on gasoline-fueled, natural gas-fueled, liquefied petroleum gas-fueled, and methanol-fueled light-duty vehicles and light-duty trucks. Certain items of equipment are not necessary for a particular test, e.g., evaporative enclosure when testing petroleum-fueled diesel vehicles. Alternate equipment, procedures, and calculation methods may be used if shown to yield equivalent or superior results, and if approved in advance by the Administrator. Equipment required and specifications are as follows:

(1) *Evaporative emission tests, gasoline-fueled vehicles.* The evaporative emission test is closely related to and connected with the exhaust emission test. All vehicles tested for evaporative emissions must undergo testing according to the test sequences described in § 86.130–96; however, the Administrator may omit measurement of exhaust emissions to test for evaporative emissions. The Administrator may truncate a test after any valid emission measurement without affecting the validity of the test. Further, unless the evaporative emission test is waived by the Administrator under § 86.090–26 or § 86.1810, as applicable, all vehicles must undergo both tests. (Petroleum-fueled diesel vehicles are excluded from the evaporative emission standard.) Section 86.107 specifies the necessary equipment.

(2) *Exhaust emission tests.* All vehicles subject to this subpart are subject to testing for both gaseous and particulate exhaust emissions using the CVS concept (see § 86.109), except where exemptions or waivers are expressly provided in subpart A of this part. Vehicles subject to the ''Tier 0'' (i.e., phase-out) standards described under subpart A of this part are exempted from testing for methane emissions. Otto-cycle vehicles subject to the ''Tier 0'' standards are waived from testing for particulates. For vehicles waived from the requirement for measuring particulate

emissions, use of a dilution tunnel is not required (see § 86.109). The CVS must be connected to the dilution tunnel if particulate emission sampling is required (see § 86.110). Petroleum- and methanol-fueled diesel-cycle vehicle testing requires that a PDP-CVS or CFV-CVS with heat exchanger be used. (This equipment may be used with methanol-fueled Otto-cycle vehicles; however, particulates need not be measured for vehicles that are waived from the requirement). All vehicles equipped with evaporative canisters are preconditioned by loading the canisters with hydrocarbon vapors. Petroleum-fueled diesel vehicles are excluded from this requirement.

(3) *Fuel, analytical gas, and driving schedule specifications.* Fuel specifications for exhaust and evaporative emission testing and for mileage accumulation for petroleum-fueled and methanol-fueled vehicles are specified in § 86.113. Analytical gases are specified in § 86.114. The Urban Dynamometer Driving Schedule (UDDS), US06, and SC03 driving schedules, for use in exhaust emission tests, and the New York City Cycle (NYCC), for use with the UDDS in running loss tests, are specified in §§ 86.115, 86.130, 86.159, 86.160, and appendix I to this part.

(b) [Reserved]

[58 FR 16026, Mar. 24, 1993, as amended at 59 FR 48504, Sept. 21, 1994; 60 FR 43888, Aug. 23, 1995; 64 FR 23921, May 4, 1999; 79 FR 23692, Apr. 28, 2014]

§ 86.107–96 Sampling and analytical systems; evaporative emissions.

(a) *Testing enclosures*—(1) *Diurnal emission test.* The enclosure shall be readily sealable, rectangular in shape, with space for personnel access to all sides of the vehicle. When sealed, the enclosure shall be gas tight in accordance with § 86.117–96. Interior surfaces must be impermeable and nonreactive to hydrocarbons (and to methanol, if the enclosure is used for methanol-fueled vehicles). The temperature conditioning system shall be capable of controlling the internal enclosure air temperature to follow the prescribed temperature versus time cycle as specified in § 86.133–96 and appendix II of this part, within an instantaneous tolerance of ±3.0 °F of the nominal temperature versus time profile throughout the test, and an average tolerance of 2.0 °F over the duration of the test (where the average is calculated using the absolute value of each measured deviation). The control system shall be tuned to provide a smooth temperature pattern that has a minimum of overshoot, hunting, and instability about the desired long-term ambient temperature profile. Interior surface temperatures shall not be less than 40 °F at any time during the diurnal emission test. To accommodate the volume changes due to enclosure temperature changes, either a variable-volume or fixed-volume enclosure may be used for diurnal emission testing:

(i) *Variable-volume enclosure.* The variable-volume enclosure expands and contracts in response to the temperature change of the air mass in the enclosure. Two potential means of accommodating the internal volume changes are movable panel(s), or a bellows design, in which impermeable bag(s) inside the enclosure expand and contract in response to internal pressure changes by exchanging air from outside the enclosure. Any design for volume accommodation must maintain the integrity of the enclosure as specified in § 86.117–96 over the specified temperature range. Any method of volume accommodation shall limit the differential between the enclosure internal pressure and the barometric pressure to a maximum value of ±2.0 inches of water. The enclosure shall be capable of latching to a fixed volume. A variable-volume enclosure must be capable of accommodating a ±7 percent change from its ''nominal volume'' (see § 86.117–96(b)), accounting for temperature and barometric pressure variation during testing.

(ii) *Fixed-volume enclosure.* The fixed-volume enclosure shall be constructed with rigid panels that maintain a fixed enclosure volume, and meet the following requirements.

(A) The enclosure shall be equipped with a mechanism to maintain a fixed internal air volume. This may be accomplished either by withdrawing air at a constant rate and providing make-up air as needed, or by reversing the flow of air into and out of the enclosure in response to rising or falling

temperatures. If inlet air is added continuously throughout the test, it should be filtered with activated carbon to provide a relatively low and constant hydrocarbon level. Any method of volume accommodation shall maintain the differential between the enclosure internal pressure and the barometric pressure to a maximum value of ±2.0 inches of water.

(B) The equipment shall be capable of measuring the mass of hydrocarbon and methanol (if the enclosure is used for methanol-fueled vehicles) in the inlet and outlet flow streams with a resolution of 0.01 gram per hour. A bag sampling system may be used to collect a proportional sample of the air withdrawn from and admitted to the enclosure. Alternatively, the inlet and outlet flow streams may be continuously analyzed using an on-line FID analyzer and integrated with the flow measurements to provide a continuous record of the mass hydrocarbon and methanol removal.

(2) *Running loss test.* The enclosure shall be readily sealable, rectangular in shape, with space for personnel access to all sides of the vehicle. When sealed, the enclosure shall be gas tight in accordance with § 86.117–96. The enclosure may be equipped with a personnel door, provided that the enclosure can still meet the requirements of § 86.117–96 with the door installed. Interior surfaces must be impermeable and nonreactive to hydrocarbons and to methanol (if the enclosure is used for methanol-fueled vehicles). Interior surface temperatures shall not be less than 40 °F. If a running loss enclosure meets all the requirements of paragraph (a)(1) of this section, it may be used as a diurnal evaporative emission enclosure. The enclosure must contain a dynamometer that meets the requirements of § 86.108. Provisions shall be made to remove exhaust gases from the enclosure. During the running loss test, ambient temperatures must be maintained at 95±5 °F (95±2 °F on average). An air or oxygen cylinder with an attached self-contained breathing apparatus may be provided for the vehicle operator. The air required for vehicle operation shall be provided by one of the following methods:

(i) The running loss enclosure may be equipped to supply air to the vehicle, at a temperature of 95±5 °F, from sources outside of the running loss enclosure directly into the operating engine's air intake system. Supplemental air requirements (e.g., for an air pump) shall be supplied by drawing air from the engine intake source.

(ii) If it is shown to yield equivalent or superior results, the running loss enclosure may be designed with an air makeup system that brings outside air into the enclosure to accommodate the aspiration needs of the engine and any auxiliary devices. The makeup air shall be monitored to establish the background hydrocarbon levels (or hydrocarbon and methanol, levels, if applicable) of the makeup air. A filter may be used to provide dry air with a stable concentration of background hydrocarbon. The makeup-air vent shall be readily sealable for calibration of the enclosure and other purposes. For calculation of running loss emissions, it may be assumed that the hydrocarbon and methanol concentration in the air consumed by the vehicle is the same as that of the rest of the air in the enclosure.

(3) *Hot soak test.* The hot soak test may be conducted by holding the vehicle in an enclosure that meets the requirements for either diurnal emission or running loss tests. The enclosure shall be configured to provide an internal enclosure ambient temperature of 95±10 °F for the first 5 minutes, and 95±5 °F (95±2 °F on average) for the remainder of the hot soak test.

(i) If the hot soak test is conducted in the same enclosure as the immediately preceding running loss test, interior surface temperatures shall not be below 70 °F for the last 55 minutes of the hot soak test.

(ii) If the hot soak test is not conducted in the same enclosure as the immediately preceding running loss test, interior surface temperatures shall not be below 70 °F for the duration of the hot soak test.

(b) *Evaporative emission hydrocarbon and methanol analyzers.* (1) For gasoline fueled, natural gas-fueled, liquefied petroleum gas-fueled and methanol-fueled vehicles a hydrocarbon analyzer utilizing the hydrogen flame ionization

principle (FID) shall be used to monitor the atmosphere within the enclosure (a heated FID (HFID)(235°±15 °F (113±8 °C)) is recommended for methanol-fueled vehicles). For natural gas-fueled vehicles, the FID may be calibrated using methane, or if calibrated using propane the FID response to methane shall be determined and applied to the FID hydrocarbon reading. Provided evaporative emission results are not effected, a probe may be used to detect or verify hydrocarbon sources during a running loss test. Instrument bypass flow may be returned to the enclosure. The FID shall have a response time to 90 percent of final reading of less than 1.5 seconds.

(2) For methanol-fueled vehicles, a methanol sampling and analyzing system is required in addition to the FID analyzer. The methanol sampling equipment shall consist of impingers for collecting the methanol sample and appropriate equipment for drawing the sample through the impingers. The analytical equipment shall consist of a gas chromatograph equipped with a flame ionization detector.

(3) The methanol sampling system shall be designed such that, if a test vehicle emitted the maximum allowable level of methanol (based on all applicable standards) during any phase of the test, the measured concentration in the primary impinger would exceed either 25 mg/l or a concentration equal to 25 times the limit of detection for the GC analyzer, and such that the primary impinger collects at least 90 percent of the analyte in the samples. The remaining analyte shall be collected by the secondary impinger. This requirement does not apply to dilution air samples, since they do not require secondary impingers, or to samples in which the concentrations approach the limit of detection. The provisions of this paragraph apply to the design of sampling systems, not to individual tests.

(c) *Evaporative emission hydrocarbon and methanol data recording system.* (1) The electrical output of the FID used for measuring hydrocarbons (or hydrocarbons plus methanol, as appropriate) shall be recorded at least at the initiation and termination of each running loss and hot soak test, and at least at the initiation and termination of the enclosure sampling period(s) for the diurnal emission test, as described in § 86.133. The recording may be taken by means of a strip chart potentiometric recorder, by use of an on-line computer system or other suitable means. In any case, the recording system must have operational characteristics (signal-to-noise ratio, speed of response, etc.) equivalent to or better than those of the signal source being recorded, and must provide a permanent record of results. The record shall show a positive indication of the initiation and completion of each hot soak, running loss, or diurnal emission test (including initiation and completion of sampling period(s)), along with the time elapsed during each soak.

(2) For the methanol sample, permanent records shall be made of the following: the volumes of deionized water introduced into each impinger, the rate and time of sample collection, the volumes of each sample introduced into the gas chromatograph, the flow rate of carrier gas through the column, the column temperature, and the chromatogram of the analyzed sample.

(d) *Fuel temperature control system.* Fuel temperatures of the test vehicle shall be controlled, as specified in § 86.134(g)(1)(xv), with the following combination of fans. The control system shall be tuned and operated to provide a smooth and continuous fuel temperature profile that is representative of the on-road temperature profile. The running loss test configuration should be designed to avoid heating or cooling the fuel tank's vapor space in a way that would cause vapor temperature behavior to be unrepresentative of the vehicle's on-road profile.

(1) A vehicle cooling fan shall discharge air to the front of the vehicle. The fan shall be a road-speed modulated fan that is controlled to a discharge velocity that follows the dynamometer roll speed, at least up to speeds of 30 mph, throughout the driving cycle. If a warning light or gauge indicates that the vehicle's engine coolant has overheated, subsequent test runs on the vehicle must include a vehicle cooling fan that follows the dynamometer roll speed at all speeds throughout the test cycle. The fan may

direct airflow to both the vehicle radiator air inlet(s) and the vehicle underbody.

(2) An additional fan may be used to discharge airflow from the front of the vehicle directly to the vehicle underbody to control fuel temperatures. Such a fan shall provide a total discharge airflow not to exceed 8,000 cfm.

(3) Additional fans may be used to route heating or cooling air directly at the bottom of the vehicle's fuel tank. The air supplied to the tank shall be between 85° and 160 °F, with a total discharge airflow not to exceed 4,000 cfm. For exceptional circumstances, manufacturers may direct up to 6,000 cfm at the bottom of the fuel tank with the advance approval of the Administrator.

(4) Direct fuel heating may be needed for canister preconditioning, as specified in § 86.132(j)(2). Also, under exceptional circumstances in which airflow alone is insufficient to control fuel temperatures during the running loss test, direct fuel tank heating may be used (see § 86.134–96(g)(1)(xv)). The heating system must not cause hot spots on the tank wetted surface that could cause local overheating of the fuel. Heat must not be applied directly to the tank's vapor space, nor to the liquid-vapor interface.

(e) [Reserved]

(f) *Pressure recording system.* A strip chart potentiometric recorder, an online computer system, or other suitable means, shall be used to record the enclosure gage pressure for any testing in an enclosure, as well as the vehicle's fuel tank pressure during the running loss test and the outdoor driving procedure specified in § 86.129–94(d). Fuel tank pressure measurement and recording equipment are optional during the running loss test. The recording system shall record each pressure at least once every minute. The recording system shall be capable of resolving time to ±15 s and capable of resolving pressure to ±0.1 inches of water. The pressure recording system (recorder and sensor) shall have an accuracy of ±1.0 inch of water. The recorder (data processor) shall have a time accuracy of ±15 s and a precision of ±15 s. The pressure transducer shall be installed to measure the pressure in the vapor space of the fuel tank.

(g) *Purge blower.* One or more portable or fixed blowers shall be used to purge the enclosure. The blowers shall have sufficient flow capacity to reduce the enclosure hydrocarbon and/or methanol concentration from the test level to the ambient level between tests. Actual flow capacity will depend upon the time available between tests.

(h) *Mixing blower.* Blowers or fans shall be used to mix the enclosure contents during evaporative emission testing. The inlets and outlets of the air circulation blower(s) shall be configured to provide a well dispersed air circulation pattern that produces effective internal mixing and avoids significant temperature or hydrocarbon stratification. Maintenance of uniform concentrations throughout the enclosure is important to the accuracy of testing.

(1) *Diurnal emission test.* Blowers or fans shall have a capacity of 0.8±0.2 cfm per cubic foot of the nominal enclosure volume for mixing in the enclosure. Additional fans may be used to maintain a minimum wind speed of 5 mph (8 km/h) under the fuel tank of the test vehicle.

(2) *Running loss test.* Blowers or fans shall have a total capacity of at least 1.0 cfm per cubic foot of the nominal enclosure volume.

(3) *Hot soak test.* Blowers or fans must have a capacity of 0.8±0.2 cfm per cubic foot of the nominal enclosure volume. Circulated air shall not be aimed directly at the vehicle.

(i) *Point-source running loss measurement facility.* Some system requirements pertain specifically to running loss testing by the point-source method, in which emissions from potential sources are collected and routed to a sampling system. Emissions are sampled with the same equipment and techniques as for exhaust emission measurement. The test environment must contain a dynamometer that meets the requirements of § 86.108. During the running loss test, ambient temperatures must be maintained at 95±5 °F (95±2 °F on average). An air or oxygen cylinder with an attached self-contained breathing apparatus may be provided for the vehicle operator.

(1) The running loss vapor vent collection system shall be configured to collect all running loss emissions from each of the discrete point sources that function as vehicle fuel system vapor vents, and transport the collected vapor emissions to a CFV- or PDP-based dilution and measurement system. The collection system shall consist of a collector at each vehicle vapor vent, lengths of heated sample line connecting each collector to the inlet of the heated sample pump, and lengths of heated sample line connecting the outlet of the heated sample pump to the inlet of the running loss fuel vapor sampling system. Up to 3 feet of unheated line connecting each of the vapor collectors to the heated sample lines shall be allowed. Each heated sample pump and its associated sample lines shall be maintained at a temperature between 175 °F and 200 °F to prevent condensation of fuel vapor in the sample lines. The heated sample pump(s) and its associated flow controls shall be configured and operated to draw a flow of ambient air into each collector at a flow rate of at least 0.67 cfm. The flow controls on each heated sampling system shall include an indicating flow meter that provides an alarm output to the data recording system if the flow rate drops below 0.67 cfm by more than 5 percent. The collector inlet for each discrete vapor vent shall be placed in proximity to the vent as necessary to capture any fuel vapor emissions without significantly affecting flow or pressure of the normal action of the vent. The collector inlets shall be designed to interface with the configuration and orientation of each specific vapor vent. For vapor vents that terminate in a tube or hose barb, a short length of tubing of an inside diameter larger throughout its length than the inside diameter of the vent outlet may be used to extend the vent into the mouth of the collector. For those vapor vent designs that are not compatible with such collector configurations, the vehicle manufacturer shall supply a collector that is configured to interface with the vapor vent design and that terminates in a fitting that is capable of capturing all vapor emitted from the vent. The Administrator may test for running losses by the point-source method without heating sample lines or pumps.

(2) The running loss fuel vapor sampling system shall be a CFV- or PDP-based dilution and measurement system that further dilutes the running loss fuel vapors collected by the vapor vent collection system(s) with ambient air, collects continuously proportional samples of the diluted running loss vapors and dilution air in sample bags, and measures the total dilute flow through the sampling system over each test interval. In practice, the system shall be configured and operated in a manner that is directly analogous to an exhaust emissions constant volume sampling system, except that the input flow to the system is the flow from the running loss vapor vent collection system(s) instead of vehicle exhaust flow. The system shall be configured and operated to meet the following requirements:

(i) The running loss fuel vapor sampling system shall be designed to measure the true mass of fuel vapor emissions collected by the running loss vapor vent collection system from the specified fuel vapor vents. The total volume of the mixture of running loss emissions and dilution air shall be measured and a continuously proportioned sample of volume shall be collected for analysis. Mass emissions shall be determined from the sample concentration and total flow over the test period.

(ii) The PDP-CVS shall consist of a dilution air filter and mixing assembly, heat exchanger, positive-displacement pump, sampling system, and associated valves, pressure and temperature sensors. The PDP-CVS shall conform to the following requirements:

(A) The gas mixture temperature, measured at a point immediately ahead of the positive-displacement pump, shall be within ±10 °F of the designed operating temperature at the start of the test. The gas mixture temperature variation from its value at the start of the test shall be limited to ±10 °F during the entire test. The temperature measuring system shall have an accuracy and precision of ±2 °F.

(B) The pressure gauges shall have an accuracy and precision of ±1.6 inches of water (±0.4 kPa).

(C) The flow capacity of the CVS shall not exceed 350 cfm.

(D) Sample collection bags for dilution air and running loss fuel vapor samples shall be sufficient size so as not to impede sample flow.

(iii) The CFV sample system shall consist of a dilution air filter and mixing assembly, a sampling venturi, a critical flow venturi, a sampling system and assorted valves, and pressure and temperature sensors. The CFV sample system shall conform to the following requirements:

(A) The temperature measuring system shall have an accuracy and precision of ±2 °F and a response time of 0.100 seconds of 62.5 percent of a temperature change (as measured in hot silicone oil).

(B) The pressure measuring system shall have an accuracy and precision of ±1.6 inches of water (0.4 kPa).

(C) The flow capacity of the CVS shall not exceed 350 cfm.

(D) Sample collection bags for dilution air and running loss fuel vapor samples shall be of sufficient size so as not to impede sample flow.

(3) An on-line computer system or strip-chart recorder shall be used to record the following additional parameters during the running loss test sequence:

(i) CFV (if used) inlet temperature and pressure.

(ii) PDP (if used) inlet temperature, pressure, and differential pressure.

[58 FR 16027, Mar. 24, 1993, as amended at 59 FR 48505, Sept. 21, 1994; 60 FR 34335, June 30, 1995; 60 FR 43888, Aug. 23, 1995; 79 FR 23692, Apr. 28, 2014]

§ 86.107–98 Sampling and analytical system.

Section 86.107–98 includes text that specifies requirements that differ from § 86.107–96. Where a paragraph in § 86.107–96 is identical and applicable to § 86.107–98, this may be indicated by specifying the corresponding paragraph and the statement ''[Reserved]. For guidance see § 86.107–96.'' Where a corresponding paragraph of § 86.107–96 is not applicable, this is indicated by the statement ''[Reserved].''

(a)(1)–(a)(3) [Reserved]. For guidance see § 86.107–96.

(a)(4) *Refueling emissions test.* The requirements detailed in § 86.107–90 (a)(1) shall apply. Alternatively, an enclosure meeting the specifications detailed in § 86.107–96 (a)(1), (2), or (3) may be used if approved in advance by the Administrator. In addition, the enclosure shall have one or more access ports leading to flexible, automatic sealing boots, in the wall(s) of the enclosure. The function of the access port(s) and boots shall be to allow fueling of the test vehicle from a fuel nozzle and hose located outside of the enclosure, with only the spout of the nozzle passing through the automatic sealing opening of the boot during fueling. There shall be no loss in the gas tightness of the enclosure at the opening of the boot either when the nozzle is inserted or when the nozzle is not inserted.

(b)–(d) [Reserved]. For guidance see § 86.107–96.

(e) *Temperature recording system*—(1) *For all emission testing.* A strip chart potentiometric recorder, an on-line computer system, or other suitable means shall be used to record enclosure ambient temperature during all evaporative emission test segments, as well as vehicle fuel tank temperature during the running loss test. The recording system shall record each temperature at least once every minute. The recording system shall be capable of resolving time to ±15 s and capable of resolving temperature to ±0.75 °F (±0.42 °C). The temperature recording system (recorder and sensor) shall have an accuracy of ±3 °F (±1.7 °C). The recorder (data processor) shall have a time accuracy of ±15 s and a precision of ±15 s. Enclosures shall be equipped with two ambient temperature sensors, connected to provide one average output, located 3 feet above the floor at the approximate mid-length of each side wall of the enclosure and within 3 to 12 inches of each side wall. For diurnal emission testing, an additional temperature sensor shall be located underneath the vehicle to provide a temperature measurement representative of the temperature of the air under the fuel tank. For running loss testing, an ambient temperature sensor shall be located at the inlet to the fan that provides engine cooling. Manufacturers shall arrange that vehicles furnished

for testing at federal certification facilities be equipped with temperature sensors for measurement of fuel tank temperature. Vehicles shall be equipped with 2 temperature sensors installed to provide an average liquid fuel temperature. The temperature sensors shall be placed to measure the temperature at the mid-volume of the liquid fuel at a fill level of 40 percent of nominal tank capacity. An additional temperature sensor may be placed to measure vapor temperatures approximately at the mid-volume of the vapor space, though measurement of vapor temperatures is optional during the running loss test. In-tank temperature sensors are not required for the supplemental two-diurnal test sequence specified in § 86.130–96 or for the refueling test specified in § 86.151–98.

(2) *Refueling emission testing only*. In addition to the enclosure ambient temperature recording system described in paragraph (e)(1) of this section, strip chart recorder(s) or automatic data processor shall be used to record vehicle soak area ambient temperature and dispensed fuel temperature at the nozzle during the test. The temperature recorder(s) or data processor shall record each temperature at least once every 20 seconds (the soak area ambient temperature recorder may be a continuous recording system). The recording system shall be capable of resolving time to ±15s and be capable of resolving temperature to ±0.75 °F (0.42 °C).

(f)–(h)(3) [Reserved]. For guidance see § 86.107–96.

(h)(4) *Refueling emission test*. Blowers or fans must have a capacity of 0.8±0.2 cfm per cubic foot of the nominal enclosure volume. Circulated air shall not be aimed directly at the vehicle.

(5) *Spilled fuel mixing blower; refueling emission test*. An explosion-proof blower of 100–200 ft^3/min (2.8–5.7 m^3/min) capacity is required to enhance mixing of vapors from spilled fuel through the enclosure atmosphere during tests. The discharge from this blower shall be directed toward the region of the enclosure floor where fuel spillage during fueling may occur.

(i) [Reserved]. For guidance see § 86.107–96.

(j) *Refueling equipment*. The refueling equipment shall consist of a fuel delivery system with temperature control equipment, fuel flow safety switch, dispensing pump, hose, nozzle and a meter to measure the dispensed fuel volume. The dispensing nozzle shall be a commercial model, not equipped with vapor recovery hardware. A fuel recirculation system may be utilized to avoid trapping of unheated fuel in the hose. The fuel delivery system must be capable of delivering fuel at 67±1.5 °F (19.4±0.8 °C) and a constant flow rate between 4.2 and 9.8 gal/min (15.9 and 37.1 liter/min) with a tolerance of ±0.3 gal/min (±1.1 liter/min) during the refueling emissions measurement phase of the test. The accuracy of the meter for measuring the dispensed fuel volume shall be ±2 percent at the test flow rate.

[59 FR 16295, Apr. 6, 1994, as amended at 60 FR 43890, Aug. 23, 1995]

§ 86.108–00 Dynamometer.

(a) The dynamometer shall simulate the road load force and inertia specified for the vehicle being tested, and shall determine the distance traveled during each phase of the test procedure.

(b) Two types of dynamometer roll configurations are currently approved by the Administrator:

(1) A small twin-roll dynamometer that has a nominal roll diameter of 8.65 inches and a nominal roll spacing of 17 inches; and

(2)(i) An electric dynamometer that has a single roll with a nominal diameter of 48 inches (1.20 to 1.25 meters).

(ii)(A) The dynamometer must be capable of dynamically controlling inertia load during the US06 test cycle as a function of a vehicle throttle position signal if a manufacturer desires using the following test option. Any time the duration of throttle operation greater than or equal to 85% of wide open throttle (WOT) is greater than or equal to eight seconds, the test inertia load may be adjusted during any of five EPA specified acceleration events by an amount of load that will eliminate additional throttle operation greater than or equal to 85% of WOT.

(B)(*1*) The specific US06 schedule accelerations time periods where inertia load adjustments may be applied are:

(*i*) 49 through 69 seconds;

(*ii*) 83 through 97 seconds;

(*iii*) 135 through 165 seconds;

(*iv*) 315 through 335 seconds; and

(*v*) 568 through 583 seconds.

(*2*) During these five time intervals when inertia load adjustment is occurring, inertia load adjustment is discontinued when throttle operation is less than 85% of WOT or at the end of the specified time interval.

(C) Each type of generic application for implementing this concept must receive the Administrator's approval before a manufacturer may use these inertia adjustments for official US06 schedule certification tests.

(c) Other dynamometer configurations may be used for testing if it can be demonstrated that the simulated road load power and inertia are equivalent, and if approved in advance by the Administrator.

(d) An electric dynamometer meeting the requirements of paragraph (b)(2) of this section, or a dynamometer approved as equivalent under paragraph (c) of this section, must be used for all types of emission testing in the following situations.

(1)(i) Gasoline vehicles which are part of an engine family which is designated to meet the phase-in of SFTP compliance required under the implementation schedule of table A00–1 of § 86.000–08, or table A00–3, or table A00–5 of § 86.000–09.

(ii) Diesel LDVs and LDT1s which are part of an engine family which is designated to meet the phase-in of SFTP compliance required under the implementation schedule of table A00–1 of § 86.000–08, or table A00–3, or table A00–5 of § 86.000–09.

(2) Starting with the 2002 model year, any light-duty vehicle or light light-duty truck which uses any regulated fuel.

(3) Starting with the 2004 model year, any heavy light-duty truck which uses any regulated fuel.

[61 FR 54890, Oct. 22, 1996]

§ 86.109–94 Exhaust gas sampling system; Otto-cycle vehicles not requiring particulate emission measurements.

(a)(1) *General.* The exhaust gas sampling system described in this paragraph is designed to measure the true mass of gaseous emissions in the exhaust of either Otto-cycle light-duty vehicles or light-duty trucks which are waived from requirements for the measurement of particulate emissions. In the CVS concept of measuring mass emissions, two conditions must be satisfied: the total volume of the mixture of exhaust and dilution air must be measured, and a continuously proportioned volume of sample must be collected for analysis. Mass emissions are determined from the sample concentration and total flow over the test period.

(2) *Vehicle tailpipe to CVS Duct.* For methanol-fueled vehicles, cooling of the exhaust gases in the duct connecting the vehicle tailpipe to the CVS shall be minimized. This may be accomplished by:

(i) Using a duct of unrestricted length maintained at a temperature above the maximum dew point of the exhaust, but below 250 °F (121 °C); heating and possibly cooling capabilities are required; or

(ii) Using a short duct (up to 12 feet long) constructed of smooth wall pipe with a minimum of flexible sections, maintained at a temperature above the maximum dew point of the exhaust, but below 250 °F (121 °C), prior to the test and during the 10 minute hot soak segment and uninsulated during the test (insulation may remain in place and/or heating may occur during testing provided maximum temperature is not exceeded); or

(iii) Using smooth wall duct less than five feet long with no required heating. A maximum of two short flexible connectors are allowed under this option; or

(iv) Omitting the duct and performing the exhaust gas dilution function at the vehicle tailpipe exit.

(3) *Positive displacement pump.* The Positive Displacement Pump-Constant Volume Sampler (PDP-CVS), Figure B94–1 satisfies the first condition by metering at a constant temperature and pressure through the pump. The

total volume is measured by counting the revolutions made by the calibrated positive displacement pump. The proportional samples for the bag sample, and for methanol-fueled vehicles, the methanol sample (Figure B94–2) and the formaldehyde sample (Figure B94–3), are achieved by sampling at a constant flow rate. For methanol-fueled vehicles, the sample lines for the methanol and formaldehyde samples are heated to prevent condensation. The temperature of the sample lines shall be more than 5 °F (3 °C) above the maximum dew point of the sample, but below 250 °F (121 °C). (Note: For 1990 through 1994 model year methanol-fueled vehicles, methanol and formaldehyde sampling may be omitted provided the bag sample (hydrocarbons and methanol) is analyzed using a HFID calibrated with methanol.)

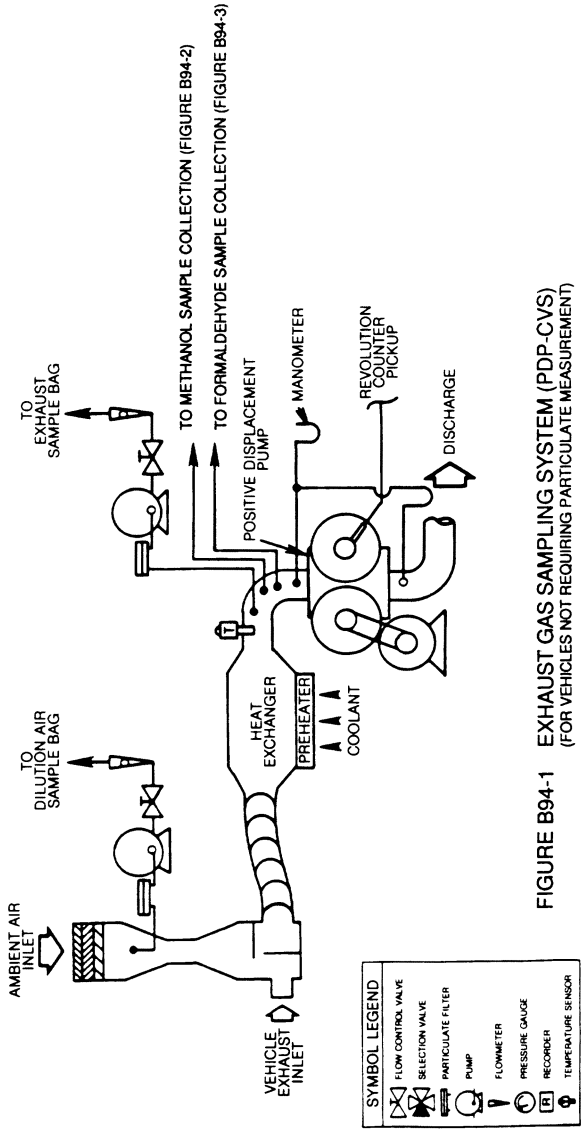

FIGURE B94-1 EXHAUST GAS SAMPLING SYSTEM (PDP-CVS)
(FOR VEHICLES NOT REQUIRING PARTICULATE MEASUREMENT)

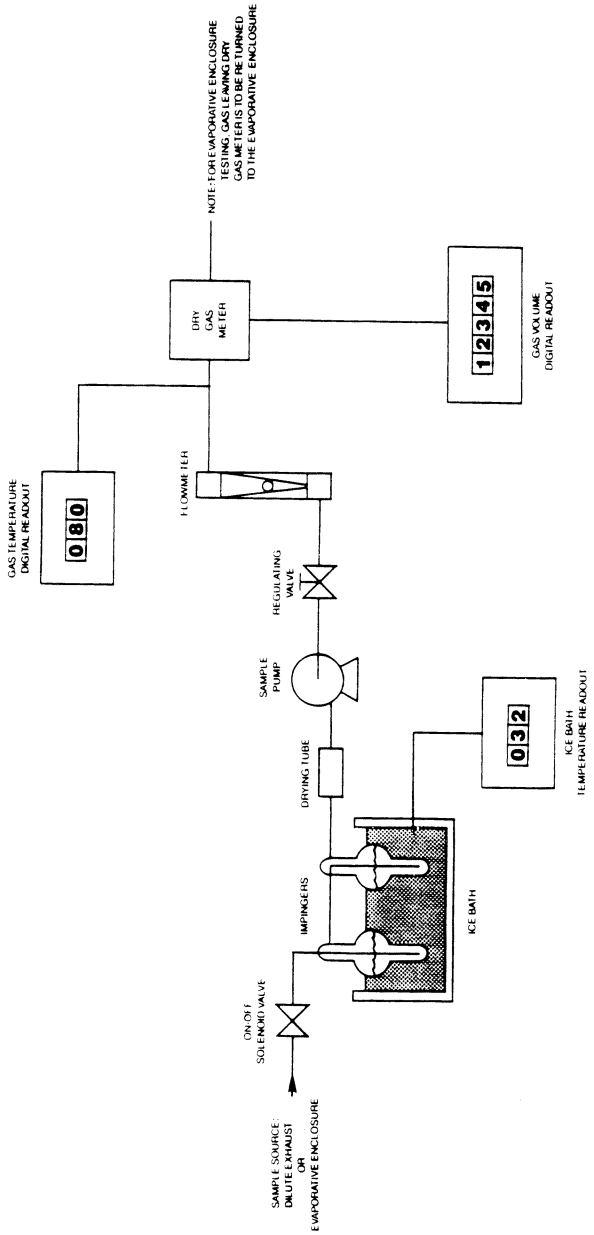

FIGURE B94-2 METHANOL SAMPLE COLLECTION FLOW SCHEMATIC

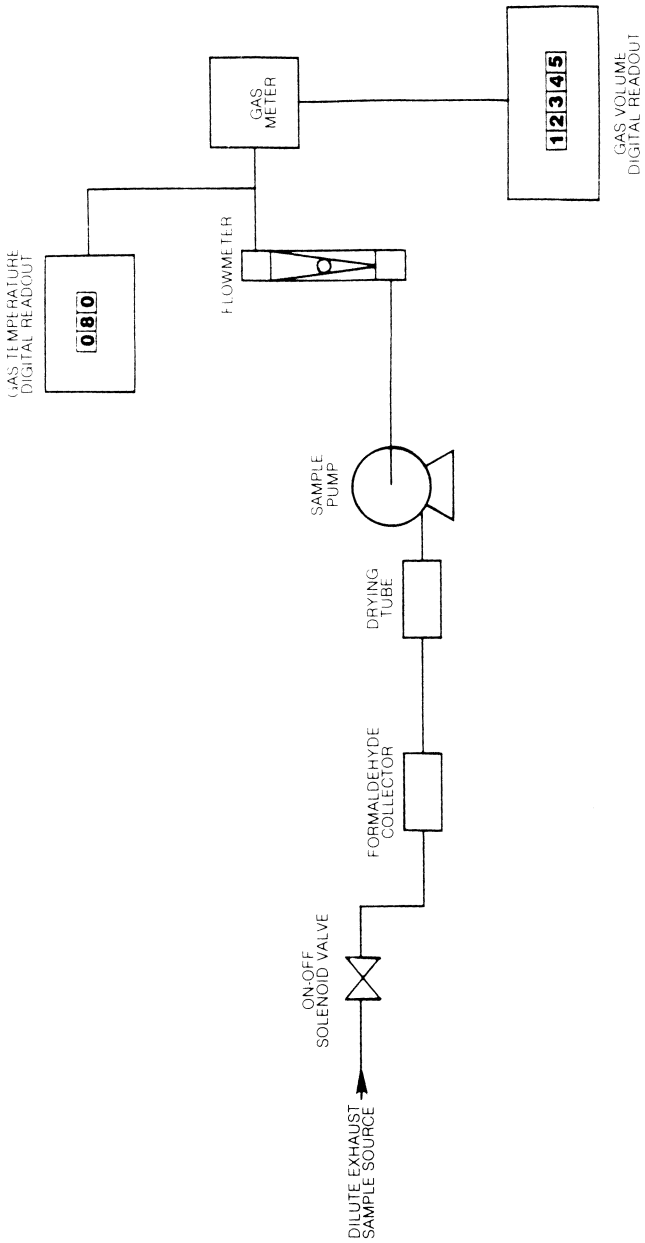

FIGURE B94-3 FORMALDEHYDE SAMPLE COLLECTION FLOW SCHEMATIC

(4) *Critical flow venturi.* The operation of the Critical Flow Venturi-Constant Volume Sampler (CFV-CVS) sample system, Figure B94–4, is based upon the principles of fluid dynamics associated with critical flow. Proportional sampling throughout temperature excursions is maintained by use of small

CFVs in the sample lines (for methanol-fueled vehicles, one line supplies sample for the bag sample, another line supplies sample for the methanol sample, and a third line supplies sample for the formaldehyde sample.) The methanol and formaldehyde sample lines are heated to prevent condensation. The temperature of the sample lines shall be more than 5 °F (3 °C) above the maximum dew point of the sample, but below 250 °F (121 °C). Care should be taken to ensure that the CFVs of the sample probes are not heated since heating of the CFVs would cause loss of proportionality. The variable mixture flow rate is maintained at sonic velocity, is inversely proportional to the square root of the gas temperature, and is computed continuously. Since the pressure and temperature are the same at all venturi inlets, the sample volume is proportional to the total volume. (Note: For 1990 through 1994 model year methanol-fueled vehicles, methanol and formaldehyde sampling may be omitted provided the bag sample (hydrocarbons and methanol) is analyzed using a HFID calibrated with methanol.)

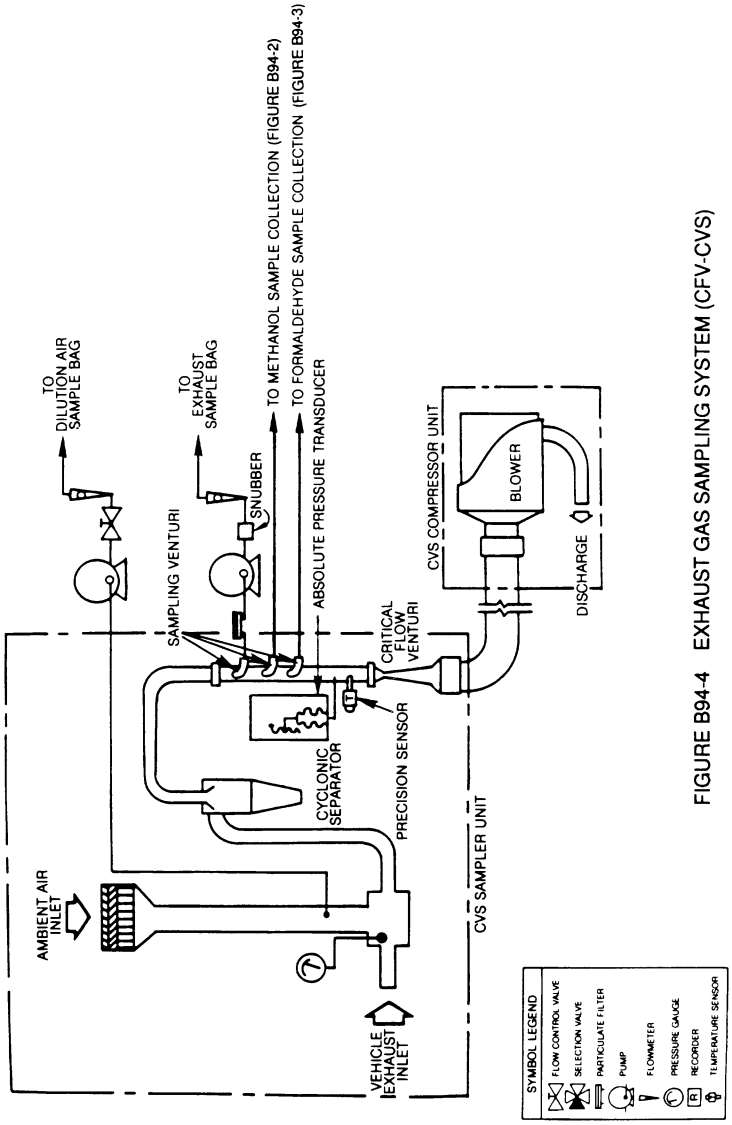

FIGURE B94-4 EXHAUST GAS SAMPLING SYSTEM (CFV-CVS)

(5) *Electronic flow control.* The Critical Flow Venturi-Electronic Flow Control-Constant Volume Sampler (CFV-EFC-CVS) system is identical to the CFV-CVS system described in paragraphs (a)(4) and (c) of this section, except that it maintains proportional sampling for methanol and formaldehyde by measuring the CVS flow rate, and electronically controlling sample flow rates. For methanol-fueled vehicles, the samples lines for the methanol and formaldehyde samples are heated to prevent condensation. The temperature of the sample lines shall be more than 5 °F (3 °C) above the maximum dew

point of the sample, but below 250 °F (121 °C).

(6) *Other systems.* Other sampling systems may be used if shown to yield equivalent or superior results, and if approved in advance by the Administrator.

(b) *Component description, PDP-CVS.* The PDP-CVS, Figure B94–1, consists of a dilution air filter and mixing assembly, heat exchanger, positive displacement pump, sampling systems (see Figure B94–2 for methanol sampling system and Figure B94–3 for formaldehyde sampling system) sampling lines which are heated to a temperature that is more than 5 °F (3 °C) above the maximum dew point of the sample, but below 250 °F (121 °C) in the case of the methanol-fueled vehicles (heating of the sample lines may be omitted, provided the methanol and formaldehyde sample collection systems are close coupled to the probes thereby preventing loss of sample due to cooling and resulting condensation in the sample lines), and associated valves, pressure and temperature sensors. The PDP-CVS shall conform to the following requirements:

(1) Static pressure variations at the tailpipe(s) of the vehicle shall remain within ±5 inches of water (1.2 kPa) of the static pressure variations measured during a dynamometer driving cycle with no connection to the tailpipe(s). (Sampling systems capable of maintaining the static pressure to within ±1 inch of water (0.25 kPa) will be used by the Administrator if a written request substantiates the need for this closer tolerance.)

(2) The gas mixture temperature, measured at a point immediately ahead of the positive displacement pump, shall be within ±10 °F (±5.6 °C) of the designed operating temperature at the start of the test. The gas mixture temperature variation from its value at the start of the test shall be limited to ±10 °F (±5.6 °C) during the entire test. The temperature measuring system shall have an accuracy and precision of ±2 °F (1.1 °C).

(3) The pressure gauges shall have an accuracy and precision of ±1.6 inches of water (0.4 kPa).

(4) The flow capacity of the CVS shall be large enough to completely eliminate water condensation in the dilution and sampling systems. (300 to 350 cfm (0.142 to 0.165 m^3/s) is sufficient for most petroleum-fueled vehicles. Higher flow rates are required for methanol-fueled vehicles and may be required for natural gas-fueled and liquefied petroleum gas-fueled vehicles. Procedures for determining CVS flow rates are detailed in ''Calculation of Emissions and Fuel Economy When Using Alternative Fuels,'' EPA 460/3–83–009.) (Copies may be obtained from U.S. Department of Commerce, NTIS, Springfield, Virginia 22161; order #PB84104702.) Dehumidifying the dilution air before entering the CVS is allowed. Hearing the dilution air is also allowed, provided:

(i) The air (or air plus exhaust gas) temperature does not exceed 250 °F.

(ii) Calculation of the CVS flow rate necessary to prevent water condensation is based on the lowest temperature encountered in the CVS prior to sampling. (It is recommended that the CVS system be insulated when heated dilution air is used.)

(iii) The dilution ratio is sufficiently high to prevent condensation in bag samples as they cool to room temperature.

(5) Sample collection bags for dilution air and exhaust samples shall be of sufficient size so as not to impede sample flow. A single dilution air sample, covering the total test period, may be collected for the determination of methanol and formaldehyde background (methanol-fueled vehicles).

(6) The methanol sample collection system and the formaldehyde sample collection system shall each be of sufficient capacity so as to collect samples of adequate size for analysis without significant impact on the volume of dilute exhaust passing through the PDP. The systems shall also comply with the following requirements that apply to the design of the systems, not to individual tests.

(i) The methanol system shall be designed such that, if a test vehicle emitted the maximum allowable level of methanol (based on all applicable standards) during the first phase of the test, the measured concentration in the primary impinger would exceed either 25 mg/l or a concentration equal to 25 times the limit of detection for the

GC analyzer. Sampling systems for all phases shall be identical.

(ii) The formaldehyde system shall be designed such that, if a test vehicle emitted formaldehyde at a rate equal to twenty percent of the maximum allowable level of NMHCE (i.e., 0.05 g/mi for a 0.25 g/mi NMHCE standard), or the maximum formaldehyde level allowed by a specific formaldehyde standard, whichever is less, during the first phase of the test, the concentration of formaldehyde in the DNPH solution of the primary impinger, or solution resulting from the extraction of the DNPH cartridge, shall exceed either 2.5 mg/l or a concentration equal to 25 times the limit of detection for the HPLC analyzer. Sampling systems for all phases shall be identical.

(iii) The methanol and formaldehyde impinger systems shall be designed such that the primary impinger collects at least 90 percent of the analyte in the samples. The remaining analyte shall be collected by the secondary impinger. This requirement does not apply to dilution air samples, since they do not require secondary impingers, or to samples in which the concentrations approach the limit of detection.

(c) *Component description, CFV-CVS.* The CFV-CVS sample system, Figure B94–4, consists of a dilution air filter and mixing assembly, a cyclone particulate separator, unheated sampling venturies for the bag samples, and for the methanol and formaldehyde samples from methanol-fueled vehicles, samples lines heated to a temperature that is more than 5 °F (3 °C) above the maximum dew point of the sample, but below 250 °F (121 °C) for the methanol and formaldehyde samples from methanol fueled vehicles (heating of the sample lines may be omitted provided, the methanol and formaldehyde sample collection systems are close coupled to the probes thereby preventing loss of sample due to cooling and resulting condensation in the sample lines), a critical flow venturi, and assorted valves, and pressure and temperature sensors. The CFV sample system shall conform to the following requirements:

(1) Static pressure variations at the tailpipe(s) of the vehicle shall remain within ±5 inches of water (1.2 kPa) of the static pressure variations measured during a dynamometer driving cycle with no connection to the tailpipe(s). (Sampling systems capable of maintaining the static pressure to within ±1 inch of water (0.25 kPa) will be used by the Administrator if a written request substantiates the need for this closer tolerance.)

(2) The temperature measuring system shall have an accuracy and precision of ±2 °F (1.1 °C) and a response time of 0.100 seconds to 62.5 percent of a temperature change (as measured in hot silicone oil).

(3) The pressure measuring system shall have an accuracy and precision of ±1.6 inches of water (0.4 kPa).

(4) The flow capacity of the CVS shall be large enough to completely eliminate water condensation in the dilution and sampling systems. (300 to 350 cfm (0.142 to 0.165 m^3/s) is sufficient for most petroleum-fueled vehicles. Higher flow rates are required for methanol-fueled vehicles and may be required for natural gas-fueled and liquefied petroleum gas-fueled vehicles. Procedures for determining CVS flow rates are detailed in ''Calculation of Emissions and Fuel Economy When Using Alternative Fuels,'' EPA 460/3–83–009.) Dehumidifying the dilution air before entering the CVS is allowed. Heating the dilution air is also allowed, provided:

(i) The air (or air plus exhaust gas) temperature does not exceed 250 °F (121 °C).

(ii) Calculation of the CVS flow rate necessary to prevent water condensation is based on the lowest temperature encountered in the CVS prior to sampling. (It is recommended that the CVS system be insulated when heated dilution air is used.)

(iii) The dilution ratio is sufficiently high to prevent condensation in bag samples as they cool to room temperature.

(5) Sample collection bags for dilution air and exhaust samples shall be of sufficient size so as not to impede sample flow. A single dilution air sample, covering the total test period, may be collected for the determination of methanol and formaldehyde background (methanol-fueled vehicles).

(6) The methanol sample collection system and the formaldehyde sample

collection system shall each be of sufficient capacity so as to collect samples of adequate size for analysis without significant impact on the volume of dilute exhaust passing through the CVS. The systems shall also comply with the following requirements that apply to the design of the systems, not to individual tests.

(i) The methanol system shall be designed such that, if a test vehicle emitted the maximum allowable level of methanol (based on all applicable standards) during the first phase of the test, the measured concentration in the primary impinger would exceed either 25 mg/l or a concentration equal to 25 times the limit of detection for the GC analyzer. Sampling systems for all phases shall be identical.

(ii) The formaldehyde system shall be designed such that, if a test vehicle emitted formaldehyde at a rate equal to twenty percent of the maximum allowable level of NMHCE (i.e., 0.05 g/mi for a 0.25 g/mi NMHCE standard), or the maximum formaldehyde level allowed by a specific formaldehyde standard, whichever is less, during the first phase of the test, the concentration of formaldehyde in the DNPH solution of the primary impinger, or solution resulting from the extraction of the DNPH cartridge, shall exceed either 2.5 mg/l or a concentration equal to 25 times the limit of detection for the HPLC analyzer. Sampling systems for all phases shall be identical.

(iii) The methanol and formaldehyde systems shall be designed such that the primary impinger collects at least 90 percent of the analyte in the samples. The remaining analyte shall be collected by the secondary impinger. This requirement does not apply to dilution air samples, since they do not require secondary impingers, or to samples in which the concentrations approach the limit of detection.

(d) *Component description, CFV-EFC-CVS.* The CVS sample system is identical to the system described in paragraph (c) of this section, plus includes a means of electronically measuring the CVS flow rate, and electronic mass flow controllers for the methanol and formaldehyde sample lines. The EFC sample system shall conform to all of the requirements listed in paragraph (c), except that the methanol and formaldehyde samples must both be drawn from a static probe. It also must comply with the following additional requirements:

(1) The ratio of the CVS mass flow rate to the sample mass flow rate shall not deviate from the design ratio by more than ±5 percent. (The volumetric sample flow rate shall be varied inversely with the square root of the bulk stream temperature.)

(2) Flow meters to totalize sample volumes for methanol and/or formaldehyde samples shall meet the accuracy specifications of § 86.120. Total sample volumes may be obtained from the flow controllers, provided that the controllers meet the accuracy specifications of § 86.120.

[56 FR 25760, June 5, 1991, as amended at 59 FR 48505, Sept. 21, 1994; 60 FR 34336, June 30, 1995]

§ 86.110–94 Exhaust gas sampling system; diesel-cycle vehicles, and Otto-cycle vehicles requiring particulate emissions measurements.

Section 86.110–94 includes text that specifies requirements that differ from § 86.110–90. Where a paragraph in § 86.110–90 is identical and applicable to § 86.110–94, this may be indicated by specifying the corresponding paragraph and the statement ''[Reserved]. For guidance see § 86.110–90.'' Where a corresponding paragraph of § 86.110–90 is not applicable, this is indicated by the statement ''[Reserved].''

(a) *General.* The exhaust gas sampling system described in this paragraph is designed to measure the true mass of both gaseous and particulate emissions in the exhaust of either diesel-cycle or Otto-cycle light-duty vehicles and light-duty trucks. This system utilizes the CVS concept (described in § 86.109) of measuring mass emissions. The mass of gaseous emissions is determined from the sample concentration and total flow over the test period. The mass of particulate emissions is determined from a proportional mass sample collected on a filter and from the total flow over the test period. General requirements are as follows:

(1) This sampling system requires the use of a PDP-CVS, CFV-CVS (or a CFV-EFC-CVS), sample system with heat

exchanger connected to a dilution tunnel. The heat exchanger is not required for the CFV-CVS or EFC-CFV-CVS if electronic flow controllers are used to maintain proportionality for the particulate sample. Figure B94–5 is a schematic drawing of the PDP system. Figure B94–6 is a schematic drawing of the CFV-CVS system. (Methanol-fueled Otto-cycle vehicles may be tested using this test equipment, without measuring particulate emissions.)

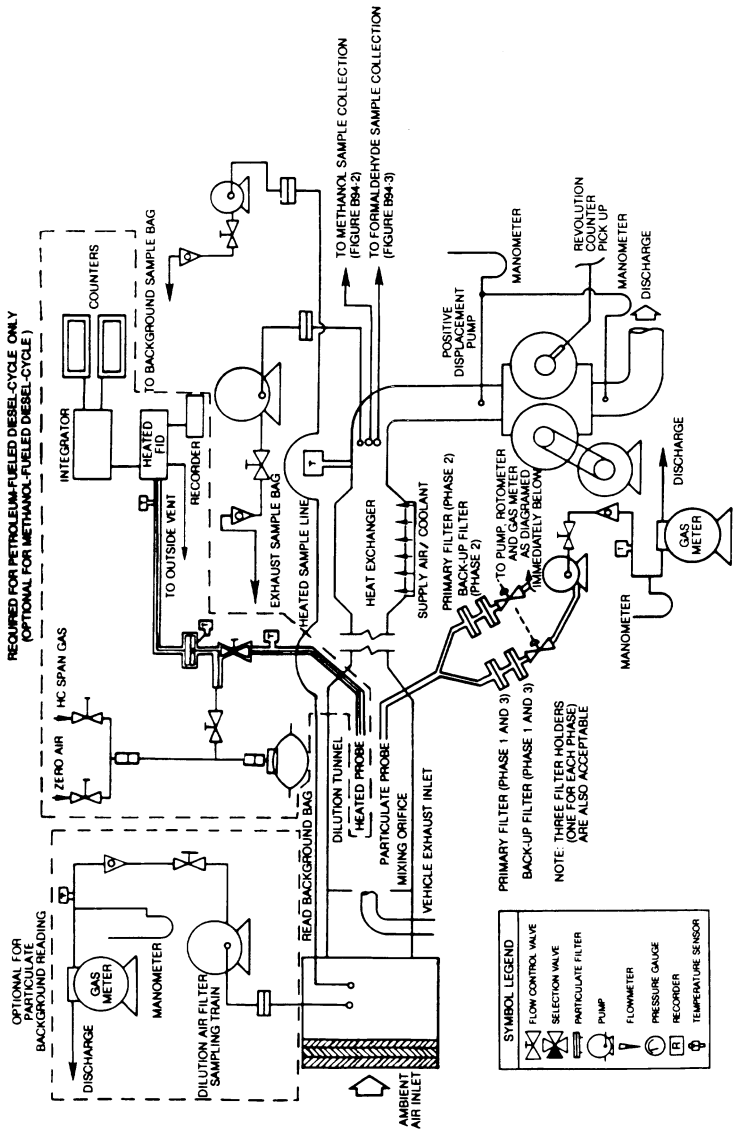

FIGURE B94-5 EXHAUST GAS SAMPLING SYSTEM (PDP-CVS)
(FOR VEHICLES REQUIRING PARTICULATE MEASUREMENT)

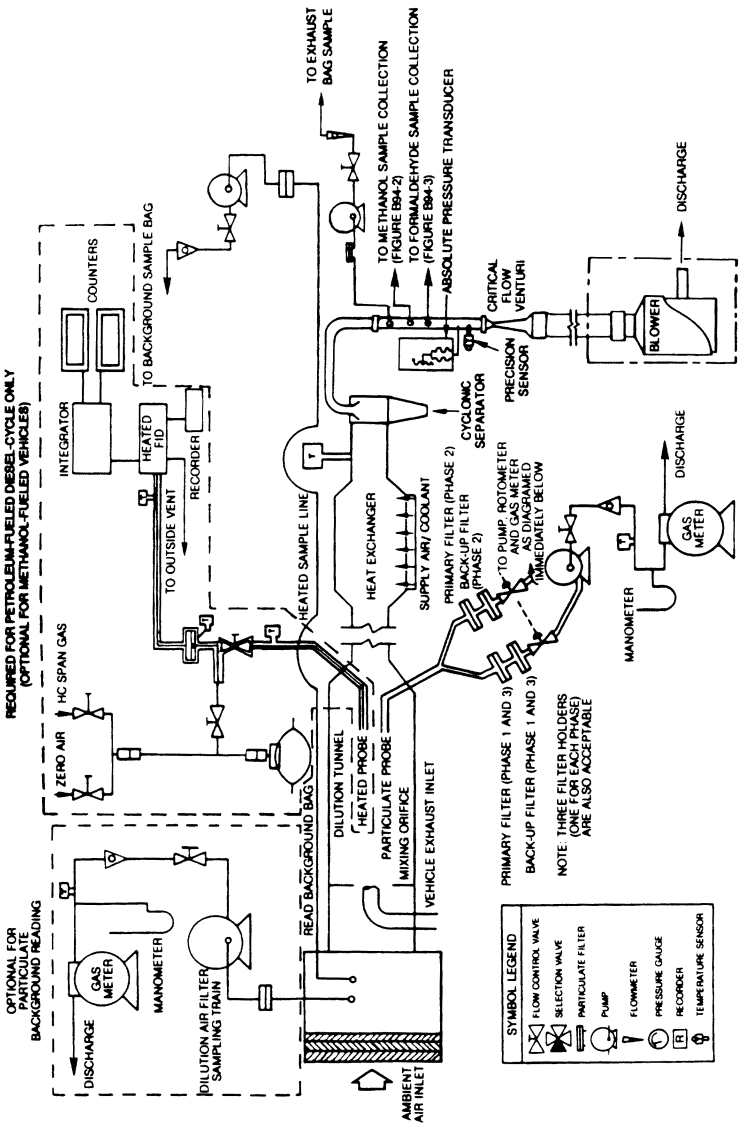

FIGURE B94-6 EXHAUST GAS SAMPLING SYSTEM (CFV-CVS)
(FOR VEHICLES REQUIRING PARTICULATE MEASUREMENT)

(2) Bag, continuous HFID (required for petroleum-fueled diesel-cycle and optional for methanol-fueled, natural gas-fueled and liquefied petroleum gas-fueled diesel-cycle vehicles), and particulate sampling capabilities as shown in Figure B94–5 (or Figure B94–6) are required to provide both gaseous and particulate emissions sampling capabilities from a single system.

(3) Petroleum-fueled diesel-cycle vehicles require a heated flame ionization detector (HFID) (375 °±20 °F (191 °±11 °C)) sample for total hydrocarbon (THC) analysis. The HFID sample must

be taken directly from the diluted exhaust stream through a heated probe in the dilution tunnel.

(4) Methanol-fueled vehicles require the use of a heated flame ionization detector (HFID) (235 °±15 °F (113 °±8 °C)) for hydrocarbon analysis. With an HFID, the hydrocarbon analysis can be made on the bag sample and the methanol and formaldehyde analyses are performed on the samples collected for these purposes (Figures B94–2 and B94–3).

NOTE: For 1990 through 1994 model year methanol-fueled vehicles, methanol and formaldehyde sampling may be omitted provided the bag sample is analyzed using a HFID calibrated with methanol.

(5) For methanol-fueled vehicles, the vehicle tailpipe-to-dilution tunnel connection shall be made by:

(i) A tailpipe to dilution tunnel duct of unrestricted length maintained at a temperature above the dew point of the mixture, but below 250 °F (121 °C) through heating and cooling as required; or

(ii) Using a short duct (up to 12 feet long) constructed of smooth wall pipe with a minimum of flexible sections maintained at a temperature above the dew point of the mixture, but below 250 °F (121 °C) prior to the test and during breaks in testing (insulation may remain in place and or heating may occur during the testing provided the maximum temperature is not exceeded); or

(iii) Using smooth wall duct less than five feet long with no required heating. A maximum of two short flexible connectors are allowed under this option; or

(iv) By omitting the duct and performing the exhaust gas dilution function at the vehicle tailpipe exit.

(6) For natural gas-fueled and liquefied petroleum gas-fueled diesel vehicles either a heated flame ionization detector (HFID) [375°±20 °F (191°±11 °C)] or a non-heated flame ionization detector may be used for hydrocarbon analysis.

(7) Since various configurations can produce equivalent results, exact conformance with these drawings is not required. Additional components such as instruments, valves, solenoids, pumps, and switches may be used to provide additional information and coordinate the functions of the component systems.

(8) Other sampling systems may be used if shown to yield equivalent or superior results and if approved in advance by the Administrator.

(b) *Component description—petroleum-fueled, natural gas-fueled and liquefied petroleum gas-fueled vehicles.* The components necessary for petroleum-fueled, natural gas-fueled and liquefied petroleum gas-fueled vehicle exhaust sampling shall meet the following requirements:

(1) The PDP-CVS, Figure B94–5, shall contain a proportional particulate sampling system, and shall conform to all of the requirements listed for the exhaust gas PDP-CVS (§ 86.109(b)), with one exception: a flow rate of sufficient volume is required to maintain the diluted exhaust stream, from which the particulate sample flow is taken, at a temperature of 125 °F (52 °C) or less.

(2) The CFV sample system, Figure B94–6, shall contain a proportional particulate sampling system, and shall conform to all of the requirements listed for the exhaust gas CFV sample system (§ 86.109(c)), except for the following:

(i) A flow rate of sufficient volume is required to maintain the diluted exhaust stream, from which the particulate sample flow is taken, at a temperature of 125 °F (52 °C) or less.

(ii) If a constant volume particulate sample is collected, a heat exchanger is required.

(iii) If a heat exchanger is used, the gas mixture temperature, measured at a point immediately ahead of the critical flow venturi, shall be within ±20 °F (11 °C) of the designed operating temperature at the start of the test. The gas mixture temperature variation from its value at the start of the test shall be limited to ±20 °F (11 °C) during the entire test. The temperature measuring system shall have an accuracy and precision of ±2 °F (1.1 °C).

(iv) The cyclonic separator is optional.

(3) For gasoline-fueled, natural gas-fueled and liquefied petroleum gas-fueled Otto-cycle and petroleum-fueled, natural gas- fueled and liquefied petroleum gas-fueled diesel-cycle vehicles,

the transfer of heat from the vehicle exhaust gas shall be minimized between the point where it leaves the vehicle tailpipe(s) and the point where it enters the dilution tunnel airstream. To accomplish this, a short length (not more than 12 feet (365 cm) if uninsulated, or not more than 20 feet (610 cm) if insulated) of smooth stainless steel tubing from the tailpipe to the dilution tunnel is required. This tubing shall have a maximum inside diameter of 4.0 inches (10.2 cm). Short sections of flexible tubing at connection points are allowed.

(4) The vehicle exhaust shall be directed downstream at the point where it is introduced into the dilution tunnel.

(5) The dilution air shall be between 68 °F (20 °C) and 86 °F (30 °C) during the test.

(6) The dilution tunnel shall be:

(i) Sized to permit development of turbulent flow (Reynolds No. >>4000) and complete mixing of the exhaust and dilution air between the mixing orifice and each of the two sample probes (i.e., the particulate probe and the heated THC sample probe). It is recommended that uniform mixing be demonstrated by the user.

(ii) At least 8.0 inches (20.3 cm) in diameter.

(iii) Constructed of electrically conductive material which does not react with the exhaust components.

(iv) Grounded.

(7) The temperature of the diluted exhaust stream inside of the dilution tunnel shall be sufficient to prevent water condensation. However, the sample zone dilute exhaust temperature shall not exceed 125 °F (52 °C) at any time during the test.

(8) The particulate sample probe shall be:

(i) Installed facing upstream at a point where the dilution air and exhaust are well mixed (i.e., near the tunnel centerline, approximately 10 tunnel diameters downstream from the point where the exhaust enters the dilution tunnel).

(ii) Sufficiently distant (radially) from the THC probe (when the THC probe is required) so as to be free from the influence of any wakes or eddies produced by the THC probe.

(iii) 0.5 inch (1.27 cm) minimum inside diameter.

(iv) The distance from the sampling tip to the filter holder shall be at least 5 probe diameters (for filters located inside of the tunnel), but not more than 40.0 inches (102 cm) for filters located outside of the dilution tunnel.

(v) Free from sharp bends.

(vi) Configured so that a clean particulate filter (including back-up filter) can be selected simultaneously with the selection of an empty gaseous emissions bag.

(9) The flow rate through the particulate probe shall be maintained to a constant value within ±5 percent of the set flow rate.

(10) The particulate sample pump shall be located sufficiently distant from the dilution tunnel so that the inlet gas temperature is maintained at a constant temperature (±5.0 °F (2.8 °C)).

(11) The gas meters or flow instrumentation shall be located sufficiently distant from the tunnel so that the inlet gas temperature remains constant (±5.0 °F (2.8 °C)).

(12) The THC probe (when the THC probe is required) shall be:

(i) Installed facing upstream at a point where the dilution air and exhaust are well mixed (i.e., approximately 10 tunnel diameters downstream from the point where the exhaust enters the dilution tunnel).

(ii) Sufficiently distant (radially) from the particulate probe so as to be free from the influence of any wakes or eddies produced by the particulate probe.

(iii) Heated and insulated over the entire length to maintain a 375 °±20 °F (191 °±11 °C) wall temperature.

(iv) 0.19 in. (0.48 cm) minimum inside diameter.

(13) It is intended that the THC probe be free from cold spots (i.e., free from spots where the probe wall temperature is less than 355 °F). This will be determined by a temperature sensor located on a section of the probe wall outside of the dilution tunnel. The temperature sensor shall be insulated from any heating elements on the probe. The sensor shall have an accuracy and precision of ±2 °F (1.1 °C).

(14) The dilute exhaust gas flowing in the THC sample system shall be:

(i) At 375 °F±10 °F (191 °C±6 °C) immediately before the heated filter. This will be determined by a temperature sensor located immediately upstream of the filter. The sensor shall have an accuracy and precision of ±2 °F (1.1 °C).

(ii) At 375 °F±10 °F (191 °C ±6 °C) immediately before the HFID. This will be determined by a temperature sensor located at the exit of the heated sample line. The sensor shall have an accuracy and precision of ±2 °F (1.1 °C).

(15) It is intended that the dilute exhaust gas flowing in the THC sample system be between 365 °F and 385 °F (185 °C and 197 °C).

(c) *Component description—methanol-fueled vehicles*. The components necessary for methanol-fueled vehicle exhaust sampling shall meet the following requirements:

(1) The PDP-CVS, Figure B94–5, shall contain a proportional particulate sampling system, and shall conform to all of the requirements listed for the exhaust gas PDP-CVS (§86.109), with one exception: a flow rate of sufficient volume is required to maintain the diluted exhaust stream, from which the particulate sample flow is taken, at a temperature of 125 °F (52 °C) or less.

(2) The CFV-CVS sample system, Figure B94–6, shall contain a proportional particulate sampling system, and shall conform to all of the requirements listed for the exhaust gas CFV sample system (§86.109), except for the following:

(i) A flow rate of sufficient volume is required to maintain the diluted exhaust stream, from which the particulate sample flow is taken, at a temperature of 125 °F (52 °C) or less.

(ii) If a constant volume particulate sample is collected, a heat exchanger is required.

(iii) If a heat exchanger is used, the gas mixture temperature, measured at a point immediately ahead of the critical flow venturi, shall be within ±20 °F (11 °C) of the designed operating temperature at the start of the test. The gas mixture temperature variation from its value at the start of the test shall be limited to ±20 °F (11 °C) during the entire test. The temperature measuring system shall have an accuracy and precision of ±2 °F (1.1 °C).

(iv) The cyclonic separator is optional.

(3) The EFC-CFV-CVS sample system shall conform to all of the requirements listed for the exhaust gas EFC sample system (§86.109) with three exceptions:

(i) A flow rate of sufficient volume is required to maintain the diluted exhaust stream, from which the particulate sample flow is taken, at a temperature of 125 °F (52 °C) or less.

(ii) A proportional particulate sample shall be collected using an electronic flow controller that meets the performance criteria listed in §86.109 for methanol and formaldehyde EFC systems.

(iii) The cyclonic separator is optional.

(4) Losses of methanol due to condensation of water in the duct connecting the vehicle tail pipe to the dilution tunnel must be eliminated. This may be accomplished by:

(i) The use of a duct of unrestricted length maintained at a temperature above the maximum dew point of the exhaust, but below 250 °F (121 °C), through heating and cooling as required; or

(ii) The use of a short duct (up to 12 feet long) constructed of smooth wall pipe with a minimum of flexible sections maintained at a temperature above the maximum dew point of the exhaust, but below 250 °F (121 °C), prior to the test and during breaks in testing (insulation may remain in place and/or heating may occur during testing provided maximum temperature is not exceeded); or

(iii) Using smooth wall duct less than five feet long with no required heating. A maximum of two short flexible connectors are allowed under this option; or

(iv) Omitting the duct and performing the exhaust gas dilution function at the vehicle tailpipe exit.

(5) The vehicle exhaust shall be directed downstream at the point where it is introduced into the dilution tunnel.

(6) The dilution air shall be between 68 °F (20 °C) and 86 °F (30 °C) during the test (unless the requirements of §86.109–94(b)(4) are also met).

(7) The dilution tunnel shall be:

(i) Sized to permit development of turbulent flow (Reynold's No. >>4000) and complete mixing of the exhaust and dilution air between the mixing orifice and the particulate sample probe. It is recommended that uniform mixing be demonstrated by the user.

(ii) At least 8.0 inches (20.3 cm) in diameter.

(iii) Constructed of electrically conductive material which does not react with the exhaust components.

(iv) Grounded.

(8) The temperature of the diluted exhaust stream inside of the dilution tunnel shall be sufficient to prevent water condensation. However, the sample zone dilute exhaust temperature shall not exceed 125 °F (52 °C) at any time during the test.

(9) The particulate sample probe shall be:

(i) Installed facing upstream at a point where the dilution air and exhaust are well mixed (i.e., near the tunnel centerline, approximately 10 tunnel diameters downstream from the point where the exhaust enters the dilution tunnel).

(ii) Sufficiently distant (radially) from the THC probe so as to be free from the influence of any wakes or eddies produced by the THC probe.

(iii) 0.5 inch (1.27 cm) minimum inside diameter.

(iv) The distance from the sampling tip to the filter holder shall be at least five probe diameters (for filters located inside the tunnel), but not more than 40.0 inches (102 cm) for filters located outside of the dilution tunnel.

(v) Free from sharp bends.

(vi) Configured so that a clean particulate filter (including back up filter) can be selected simultaneously with the selection of an empty gaseous emissions bag.

(10) The flow rate through the particulate probe shall be maintained to a constant value within ±5 percent of the set flow rate.

(11) The particulate sample pump shall be located sufficiently distant from the dilution tunnel so that the inlet gas temperature is maintained at a constant temperature (±5.0 °F (2.8 °C)).

(12) The gas meters or flow instrumentation shall be located sufficiently distant from the tunnel so that the inlet gas temperature remains constant (±5.0 °F (2.8 °C)).

(13) The hydrocarbon probe shall be:

(i) Installed facing upstream at a point where the dilution air and exhaust are well mixed (i.e., approximately ten tunnel diameters downstream from the point where the exhaust enters the dilution tunnel).

(ii) Sufficiently distant (radially) from the particulate probe so as to be free from the influence of any wakes of eddies produced by the particulate probe.

(iii) Heated and insulated over the entire length to maintain a wall temperature more than 5 °F (3 °C) above the maximum dew point of the sample, but below 250 °F (121 °C).

(iv) 0.19 in. (0.48 cm) minimum inside diameter.

(14) It is intended that the THC probe be free from cold spots (i.e., free from cold spots where the probe wall temperature is less than 5 °F (3 °C) above the maximum dew point of the sample.) This will be determined by a temperature sensor located on a section of the probe wall outside of the dilution tunnel. The temperature sensor shall be insulated from any heating elements on the probe. The sensor shall have an accuracy and precision of ±2 °F (1.1 °C).

(15) The dilute exhaust gas flowing in the hydrocarbon sample system shall be:

(i) At 235 °F ±15 °F (113 °C ±8 °C) immediately before the heated filter. This will be determined by a temperature sensor located immediately upstream of the filter. The sensor shall have an accuracy and precision of ±2 °F (1.1 °C).

(ii) At 235° ±15 °F (113 °C ±8 °C) immediately before the HFID. This will be determined by a temperature sensor located at the exit of the heated sample line. The sensor shall have an accuracy and precision of ±2 °F (1.1 °C).

(16) It is intended that the dilute exhaust gas flowing in the hydrocarbon sample system between 220 °F and 250 °F (105 °C and 121 °C).

(17) For methanol-fueled vehicles, bag sampling procedures for the measurement of hydrocarbons as described in § 86.109 may be employed.

(d) *Filters, particulate sampling*. Use fluorocarbon-coated glass fiber filters

or fluorocarbon-based (membrane) filters to collect particulate matter, as follows:

(1) Use primary and back-up test filters as follows for particulate measurements:

(i) During each phase of the UDDS, sample dilute exhaust simultaneously with paired primary and back-up test filters.

(ii) Position the back-up filter holder 3 to 4 inches downstream of the primary filter holder.

(iii) Determine the net weight of particulate material collected on each primary test filter and each back-up test filter using the procedure described in §86.139.

(iv) Determine a ratio of net weights using the following formula:

$$\text{Ratio of net weights} = \frac{(\text{Mass Particulate})_{\text{primary filter}}}{(\text{Mass Particulate})_{\text{primary filter}} + (\text{Mass Particulate})_{\text{back-up filter}}}$$

(v) If the ratio is greater than 0.95, base the particulate emission calculations on the net weight of the primary filter only.

(vi) If the ratio is less than 0.95, base the particulate emission calculations on the combined net weights of the back-up test filter and the primary test filter.

(2) The particulate filter must have a 47 mm diameter (37 mm stain area).

[56 FR 25767, June 5, 1991, as amended at 59 FR 48505, Sept. 21, 1994; 60 FR 34342, June 30, 1995; 79 FR 23692, Apr. 28, 2014]

§86.111–94 Exhaust gas analytical system.

Section 86.111–94 includes text that specifies requirements that differ from §86.111–90. Where a paragraph in §86.111–90 is identical and applicable to §86.111–94, this may be indicated by specifying the corresponding paragraph and the statement ''[Reserved]. For guidance see §86.111–90.'' Where a corresponding paragraph of §86.111–90 is not applicable, this is indicated by the statement ''[Reserved].''

(a) *Schematic drawings.* Figure B94–7 is a schematic drawing of the exhaust gas analytical system for samples from bag sampling systems for analysis of total hydrocarbon (THC) (hydrocarbon plus methanol in the case of methanol-fueled vehicles), methane (CH_4) (for vehicles subject to the NMHC and NMHCE standards), carbon monoxide (CO), carbon dioxide (CO_2), and oxides of nitrogen (NO_X). The schematic diagram of the continuous THC analysis train (and for THC plus methanol for methanol-fueled diesel-cycle vehicles) is shown as part of Figure B94–5 (or Figure B94–6). Since various configurations can produce accurate results, exact conformance with either drawing is not required. Additional components such as instruments, valves, solenoids, pumps, and switches may be used to provide additional information and coordinate the functions of the component systems.

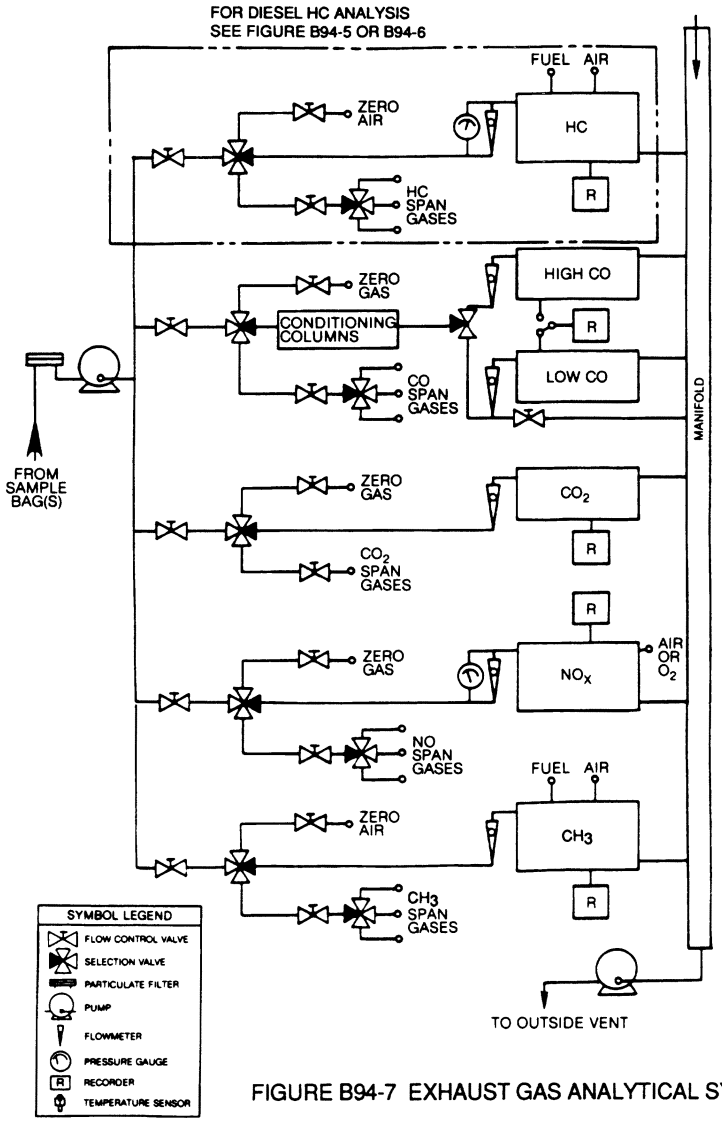

FIGURE B94-7 EXHAUST GAS ANALYTICAL SYSTEM

(b) *Major component description.* The exhaust gas analytical system, Figure B94–7, consists of a flame ionization detector (FID) (heated, 235° ±15 °F (113° ±8 °C) for methanol-fueled vehicles) for the determination of THC, a methane analyzer (consisting of a gas chromatograph combined with a FID) for the determination of CH_4, non-dispersive infrared analyzers (NDIR) for the determination of CO and CO_2, a chemiluminescence analyzer (CL) for the determination of NO_X, and an analyzer meeting the requirements specified in 40 CFR 1065.275 for the determination of N_2O. A heated flame ionization detector (HFID) is used for the continuous determination of THC from

petroleum-fueled diesel-cycle vehicles (may also be used with methanol-fueled diesel-cycle vehicles), Figure B94–5 (or B94–6). The analytical system for methanol consists of a gas chromatograph (GC) equipped with a flame ionization detector. The analysis for formaldehyde is performed using high-pressure liquid chromatography (HPLC) of 2,4-dinitrophenylhydrazine (DNPH) derivatives using ultraviolet (UV) detection. The exhaust gas analytical system shall conform to the following requirements:

(1) The CL requires that the nitrogen dioxide present in the sample be converted to nitric oxide before analysis. Other types of analyzers may be used if shown to yield equivalent results and if approved in advance by the Administrator.

(2) The carbon monoxide (CO) NDIR analyzer may require a sample conditioning column containing $CaSO_4$, or indicating silica gel to remove water vapor, and containing ascarite to remove carbon dioxide from the CO analysis stream.

(i) If CO instruments which are essentially free of CO_2 and water vapor interference are used, the use of the conditioning column may be deleted, see §§ 86.122 and 86.144.

(ii) A CO instrument will be considered to be essentially free of CO_2 and water vapor interference if its response to a mixture of 3 percent CO_2 in N_2 which has been bubbled through water at room temperature produces an equivalent CO response, as measured on the most sensitive CO range, which is less than 1 percent of full scale CO concentration on ranges above 300 ppm full scale or less than 3 ppm on ranges below 300 ppm full scale, see § 86.122.

(3) For petroleum-fueled diesel vehicles (and if selected, for methanol-fueled, natural gas-fueled and liquefied petroleum gas-fueled diesel vehicles) a continuous hydrocarbon sample shall be measured using a heated analyzer train as shown in Figure B90–5 (or B90–6). The train shall include a heated probe, a heated continuous sampling line, a heated particulate filter and a heated hydrocarbon instrument (HFID) complete with heated pump, filter and flow control system.

(i) The response time of this instrument shall be less than 1.5 seconds for 90 percent of full scale response.

(ii) The continuous THC sample system may use an ''overflow'' zero and span system; see § 86.140–82(b)(4). In this type of system (figures B82–3A and B82–4A), zero or span gas is introduced into the heated sample line at a flow rate that exceeds the sample flow rate to the HFID. The excess gas overflows the sample probe into the dilution tunnel. This method assures that the reference gas enters HFID in the same concentration as the injected reference gas and at the same rate as the sample exhaust gas. In addition to zero and span checks, it may also be used to calibrate the THC analyzer per § 86.121–82(b). The overflow gas flow rate into the sample line shall be greater than 125 percent of the HFID flow rate with the CVS blower operating. A lower flow rate may be used if it has been experimentally shown to produce equivalent results and current documentation is maintained. The overflow gases shall enter the heated sample line as close as practicable to the outside surface of the dilution tunnel.

(iii) No other analyzers may draw a sample from the continuous THC sample probe, line, or system, unless a common sample pump is used of all analyzers and the single sample line system design reflects good engineering practice.

(iv) Sample transport time from sampling point to inlet of instrument shall be less than 4 seconds.

(v) For petroleum-fueled, natural gas-fueled and liquefied petroleum gas-fueled diesel vehicles, the sample line and filter shall be heated to maintain a sample gas temperature of 375° ±10 °F (191° ±6 °C) before the filter and before the HFID.

(vi) For methanol-fueled diesel-cycle vehicles, the sample line and filter shall be heated to maintain a sample gas temperature of 235 °±15 °F (113 °±8 °C) before the filter and before the HFID.

(vii) Using a methane analyzer consisting of a gas chromatograph combined with a FID, measure methane according to SAE J1151 (incorporated by reference in § 86.1).

(c) *Other analyzers and equipment.* Other types of analyzers and equipment may be used if shown to yield equivalent or superior results and if approved in advance by the Administrator.

[56 FR 25771, June 5, 1991, as amended at 58 FR 33209, June 16, 1993; 59 FR 48505, Sept. 21, 1994; 59 FR 50073, Sept. 30, 1994; 75 FR 25677, May 7, 2010; 77 FR 63152, Oct. 15, 2012; 79 FR 23693, Apr. 28, 2014]

§ 86.112–91 Weighing chamber (or room) and microgram balance specifications.

(a) *Ambient conditions*—(1) *Temperature.* The temperature of the chamber in which the particulate filters are conditioned and weighed shall be maintained to within ±10 °F (6 °C) of a set point between 68 °F (20 °C) and 86 °F (30 °C) during all filter conditioning and filter weighing. A continuous recording of the temperature is required.

(2) *Humidity.* The relative humidity of the chamber in which the particulate filters are conditioned and weighed shall be maintained to within ±10 percent of a set point between 30 and 70 percent during all filter conditioning and filter weighing. A continuous recording of the temperature is required.

(3) The environment shall be free from any ambient contaminants (such as dust) that would settle on the particulate filters during their stabilization.

(4) It is required that two unused reference filters remain in the weighing room at all times in covered (to reduce dust contamination) but unsealed (to permit humidity exchange) petri dishes. These reference filters shall be placed in the same general area as the sample filters. These reference filters shall be weighed within 4 hours of, but preferably just prior to, the pre- and post-test sample filter weighings.

(5) If the weight of either of the reference filters changes between pre- and post-test sample filter weighings by more than ±2.0 percent of the test average primary filter loading (recommended minimum of 0.5 milligrams) or ±0.010 milligrams, whichever is greater, then the post-test sample filter weights are invalid. However, the post-test weighing procedure can be repeated to obtain valid weights within the time limits as specified in § 86.139.

(6) The reference filters shall be changed at least once per month, but never between pre- and post-test weighings of a given sample filter. The reference filters shall be the same size and material as the sample filters.

(b) *Microgram balance specifications.* The microgram balance used to determine the weights of all filters shall have a precision (standard deviation) and a readability of one microgram.

(c) *Other procedures and equipment.* Other procedures and equipment may be used if shown to yield equivalent or superior results and if approved in advance by the Administrator.

[56 FR 25773, June 5, 1991]

§ 86.113–04 Fuel specifications.

This section includes text that specifies requirements that differ from § 86.113–94. Where a paragraph in § 86.113–94 is identical and applicable to this section, this will be indicated by specifying the corresponding paragraph and the statement ''[Reserved]. For guidance see § 86.113–94.''.

(a) *Gasoline fuel.* (1) Gasoline meeting the following specifications, or substantially equivalent specifications approved by the Administrator, must be used for exhaust and evaporative emission testing:

TABLE 1 OF § 86.113–04—TEST FUEL SPECIFICATIONS FOR GASOLINE WITHOUT ETHANOL

Item	Regular	Reference procedure [1]
Research octane, Minimum [2]	93	ASTM D2699; ASTM D2700
Octane sensitivity [2]	7.5	ASTM D2699; ASTM D2700
Distillation Range (°F):		
Evaporated initial boiling point [3]	75–95	ASTM D86
10% evaporated	120–135.	
50% evaporated	200–230.	
90% evaporated	300–325.	
Evaporated final boiling point	415 Maximum.	
Hydrocarbon composition (vol %):		
Olefins	10% Maximum	ASTM D1319

TABLE 1 OF §86.113–04—TEST FUEL SPECIFICATIONS FOR GASOLINE WITHOUT ETHANOL—Continued

Item	Regular	Reference procedure [1]
Aromatics	35% Maximum.	
Saturates	Remainder.	
Lead, g/gallon (g/liter), Maximum	0.050 (0.013)	ASTM D3237
Phosphorous, g/gallon (g/liter), Maximum	0.005 (0.0013)	ASTM D3231
Total sulfur, wt. % [4]	0.0015–0.008	ASTM D2622
Dry Vapor Pressure Equivalent (*DVPE*), psi (kPa) [5]	8.7–9.2 (60.0–63.4)	ASTM D5191

[1] ASTM procedures are incorporated by reference in §86.1.
[2] Octane specifications are optional for manufacturer testing.
[3] For testing at altitudes above 1,219 m (4000 feet), the specified range is 75–105 °F.
[4] Sulfur concentration will not exceed 0.0045 weight percent for EPA testing.
[5] For testing unrelated to evaporative emission control, the specified range is 8.0–9.2 psi (55.2–63.4 kPa). For testing at altitudes above 1,219 m (4000 feet), the specified range is 7.6–8.0 psi (52.4–55.2 kPa). Calculate dry vapor pressure equivalent, *DVPE*, based on the measured total vapor pressure, p_T, using the following equation: *DVPE* (psi) = $0.956 \cdot p_T - 0.347$ (or *DVPE* (kPa) = $0.956 \cdot p_T - 2.39$). *DVPE* is intended to be equivalent to Reid Vapor Pressure using a different test method.

(2) Manufacturers may use California test fuels, as follows:

(i) For model year 2014 and earlier vehicles certified for 50-state sale, manufacturers may perform exhaust emission tests using California Phase 2 gasoline as specified in Chapter 4 of the California Regulatory Requirements Applicable to the National Low Emission Vehicle Program, October 1996 (incorporated by reference in §86.1). However, the Administrator may use or require the use of test fuel meeting the specifications in paragraph (a)(1) of this section for confirmatory testing, selective enforcement auditing and in-use testing.

(ii) For model year 2015 and later, manufacturers may certify 50-state Tier 2 vehicles based on testing used to meet California's LEV III standards, subject to the following provisions:

(A) Manufacturers may perform exhaust and evaporative emission tests using California Phase 2 gasoline or California LEV III gasoline. The Administrator may use or require the use of test fuel meeting the specifications in paragraph (a)(1) of this section for confirmatory testing, selective enforcement auditing and in-use testing.

(B) All evaporative testing with California fuel must be conducted with temperatures meeting the specifications adopted by the California Air Resources Board.

(C) The vehicles must also meet exhaust and evaporative emission standards at high-altitude conditions as specified in §§86.1811–17 and 86.1813–17, except that testing is based on the fuel specified in paragraph (a)(1) of this section.

(D) The vehicle must meet the applicable cold temperature standards using test fuel specified for cold temperature testing in §86.213.

(3)(i) Unless otherwise approved by the Administrator, gasoline representative of commercial gasoline that will be generally available through retail outlets must be used in service accumulation. Unless otherwise approved by the Administrator, where the vehicle is to be used for evaporative emission durability demonstration, such fuel must contain ethanol as required by §86.1824–08(f)(1).

(ii) Unless otherwise approved by the Administrator, the octane rating of the gasoline used must be no higher than 1.0 Retail octane number above the lowest octane rating that meets the fuel grade the manufacturer will recommend to the ultimate purchaser for the relevant production vehicles. If the manufacturer recommends a Retail octane number rather than a fuel grade, then the octane rating of the service accumulation gasoline can be no higher than 1.0 Retail octane number above the recommended Retail octane number. The service accumulation gasoline must also have a minimum sensitivity of 7.5 octane numbers, where sensitivity is defined as the Research octane number minus the Motor octane number.

(iii) The Reid Vapor Pressure of the gasoline used must be characteristic of the motor fuel used during the season in which the service accumulation takes place.

(4) The specification range of the gasoline to be used under this paragraph (a) must be reported in accordance with §§ 86.094–21(b)(3) and 86.1844–01.

(b)–(g) [Reserved]. For guidance see § 86.113–94.

[65 FR 6848, Feb. 10, 2000, as amended at 75 FR 25678, May 7, 2010; 79 FR 23693, Apr. 28, 2014; 80 FR 9102, Feb. 19, 2015]

§ 86.113–15 Fuel specifications.

Section 86.113–15 includes text that specifies requirements that differ from § 86.113–94. Where a paragraph in § 86.113–94 is identical and applicable to § 86.113–15, this may be indicated by specifying the corresponding paragraph and the statement ''[Reserved]. For guidance see § 86.113–94.''

(a) *Gasoline fuel*. This paragraph (a) describes how to transition to an ethanol-blend test fuel for vehicles certified under subpart S of this part. You may use the test fuels specified in § 86.113–04(a) for vehicles that are not yet subject to testing with the new fuel. You may use the specified ethanol-blend test fuel anytime earlier than we specify as long as you use the corresponding procedures for measuring and calculating emission results. See 40 CFR 600.117 for special provisions that apply for emission measurements related to fuel economy and greenhouse gases. Manufacturers must certify using E10 test fuel as specified in 40 CFR part 1065, subpart H, and service accumulation fuel meeting applicable specifications as follows:

(1) Except as allowed under paragraph (a)(2) of this section, Use E10 test fuel to demonstrate compliance with the Tier 3 exhaust emission standards as specified in § 86.1811 and 86.1816, and to demonstrate compliance with the Tier 3 evaporative emission standards as specified in § 86.1813.

(2) You may use California test fuels to demonstrate compliance with Tier 3 emission standards as follows:

(i) For vehicles certified for 50-state sale, you may instead use California Phase 3 gasoline (E10) as adopted in California's LEV III program for exhaust emission testing. Through model year 2019, we will also use this E10 fuel for any low-altitude exhaust emission testing with such vehicles. Starting in model year 2020, we may use test fuel meeting either California Phase 3 gasoline (E10) or the gasoline (E10) test fuel specified in this paragraph (a). For cold temperature testing and for exhaust emission tests at high-altitude conditions, you may certify vehicles through model year 2019 based on testing with the gasoline (E0) test fuel specified in § 86.113–04(a); for such vehicles, we may use test fuel meeting either the gasoline (E0) test fuel specified in § 86.113–04(a) or the gasoline (E10) test fuel specified in this paragraph (a).

(ii) For vehicles that were certified to SULEV exhaust emission standards with a 150,000 mile useful life under California's LEV II program and that are eligible to use that carryover data for continued certification, you may use that carryover data to demonstrate compliance with the exhaust emission standards that apply for Bin 30 vehicles under § 86.1811–17 for model years 2015 through 2019. The test fuel specifications that applied for the original emission measurements under the LEV II program also apply for any additional exhaust testing under the Tier 3 program, including confirmatory testing, selective enforcement auditing, and in-use testing. For vehicles certified under this paragraph (a)(2)(ii), use the E10 test fuel specified in 40 CFR 1065.710 for cold temperature testing and high-altitude testing.

(iii) For vehicles certified for 50-state sale, you may instead use California test fuel for evaporative emission testing as follows:

(A) If you originally certified vehicles in California in model year 2015 or 2016 to PZEV standards with California Phase 2 gasoline, you may use that data with carryover vehicles to certify to the Tier 3 evaporative emission standards through model year 2019. We will use this same fuel to measure diurnal, hot soak, running loss, and SHED rig emissions at low-altitude conditions for such vehicles. For refueling, spitback, and high-altitude testing, you may use test fuel meeting either the gasoline (E0) test fuel specified in § 86.113–04(a) or the gasoline (E10) test fuel specified in this paragraph (a); we may use either of the specified fuels for our testing. For leak testing, you must use the gasoline (E10) test fuel specified in this paragraph (a).

(B) If you certify vehicles to LEV III standards with California Phase 3 gasoline (E10), you may use that collection of data to certify to the Tier 3 evaporative emission standards. Through model year 2019, we will use this same fuel to measure diurnal, hot soak, running loss, SHED rig, and canister bleed emissions (as appropriate) at low-altitude conditions; starting in model year 2020, we may use either California Phase 3 gasoline (E10) or the gasoline (E10) test fuel specified in this paragraph (a) for our testing with such vehicles. For refueling, spitback, high-altitude, and leak testing, you must use the gasoline (E10) test fuel specified in this paragraph (a), except that you may instead use the gasoline (E0) test fuel specified in § 86.113–04(a) for model year 2015 and 2016; we will use your selected fuel for our testing. Note that you may no longer certify vehicles to the Tier 3 standards based on California's rig-testing procedures after model year 2021, as described in § 86.1813–17(g).

(C) For evaporative emission testing with California test fuels, perform tests based on the test temperatures specified by the California Air Resources Board.

(3) Except as specified in paragraph (a)(2)(iii) of this section and in this paragraph (a)(3), use E10 test fuel to demonstrate compliance with the refueling and spitback emission standards for any vehicles that must be certified to meet the diurnal plus hot soak standards with E10 test fuel under paragraphs (a)(1) and (2) of this section. You may delay using E10 test fuel until model year 2022 for incomplete heavy-duty vehicles not certified to refueling emission standards.

(4) If a vehicle uses E10 test fuel for evaporative emission testing and E0 is the applicable test fuel for exhaust emission testing, exhaust measurement and reporting requirements apply over the course of the evaporative emission test, but the vehicle need not meet the exhaust emission standards during the evaporative emission test run.

(5) For service accumulation, use a commercially available fuel, subject to the additional specification in § 86.1824–08(f) for evaporative emissions.

(b) through (g) [Reserved]. For guidance see § 86.113–94.

[79 FR 23694, Apr. 28, 2014]

§ 86.113–94 Fuel specifications.

(a) [Reserved]

(b) *Petroleum diesel test fuel.* (1) The petroleum fuels employed for testing diesel vehicles shall be clean and bright, with pour and cloud points adequate for operability. The petroleum diesel fuel may contain nonmetallic additives as follows: Cetane improver, metal deactivator, antioxidant, dehazer, antirust, pour depressant, dye, dispersant and biocide. Fuels specified for emissions testing are intended to be representative of commercially available in-use fuels.

(2) A diesel fuel designated as ''Type 2–D'' grade meeting the following specifications, or substantially equivalent specifications approved by the Administrator, must be used for exhaust emission testing:

Property	Unit	Type 2–D	Reference procedure [1]
(i) Cetane Number		40–50	ASTM D613
(ii) Cetane Index		40–50	ASTM D976
(iii) Distillation range:			
(A) IBP		340–400 (171.1–204.4).	
(B) 10 pct. point		400–460 (204.4–237.8).	
(C) 50 pct. point	°F (°C)	470–540 (243.3–282.2)	STM D86
(D) 90 pct. point		560–630 (293.3–332.2).	
(E) EP		610–690 (321.1–365.6)	
(iv) Gravity	°API	32–37	ASTM D4052
(v) Total sulfur	ppm	7–15	ASTM D2622
(vi) Hydrocarbon composition: Aromatics, minimum (Remainder shall be paraffins, naphthenes, and olefins).	pct	27	ASTM D5186
(vii) Flashpoint, min	°F (°C)	130 (54.4)	ASTM D93
(viii) Viscosity	centistokes	2.0–3.2	ASTM D445

[1] ASTM procedures are incorporated by reference in § 86.1.

(3) A diesel fuel designated as ''Type 2–D'' grade meeting the following specifications, or substantially equivalent specifications approved by the Administrator, must be used for service accumulation:

Property	Unit	Type 2–D	Reference procedure [1]
(i) Cetane Number		38–58	ASTM D613
(ii) Cetane Index, minimum		40	ASTM D976
(iii) 90 percent distillation	°F	540–630	ASTM D86
(iv) Gravity	°API	30–39	ASTM D4052
(v) Total sulfur	Ppm	7–15	ASTM D2622
(vi) Flashpoint, minimum	°F (°C)	130 (54.4)	ASTM D93
(vii) Viscosity	centistokes	1.5–4.5	ASTM D445

[1] ASTM procedures are incorporated by reference in § 86.1.

(4) Other petroleum distillate fuels may be used for testing and service accumulation provided:

(i) They are commercially available; and

(ii) Information, acceptable to the Administrator, is provided to show that only the designated fuel would be used in customer service; and

(iii) Use of a fuel listed under paragraphs (b)(2) and (b)(3) of this section would have a detrimental effect on emissions or durability; and

(iv) Written approval from the Administrator of the fuel specifications is provided prior to the start of testing.

(5) The specification range of the fuels to be used under paragraphs (b)(2), (b)(3) and (b)(4) of this section shall be reported in accordance with § 86.094–21(b)(3) or § 86.1844–01 as applicable.

(c) *Methanol fuel.* (1) Methanol fuel used for exhaust and evaporative emission testing and in service accumulation shall be representative of commercially available methanol fuel and shall consist of at least 50 percent methanol by volume.

(i) Manufacturers shall recommend the methanol fuel to be used for testing and service accumulation.

(ii) The Administrator shall determine the methanol fuel to be used for testing and service accumulation.

(2) Other methanol fuels may be used for testing and service accumulation provided:

(i) They are commercially available; and

(ii) Information, acceptable to the Administrator, is provided to show that only the designated fuel would be used in customer service; and

(iii) Use of a fuel listed under paragraph (c)(1) of this section would have a detrimental effect on emissions or durability; and

(iv) Written approval from the Administrator of the fuel specifications must be provided prior to the start of testing.

(3) The specification range of the fuels to be used under paragraphs (c)(1) and (c)(2) of this section shall be reported in accordance with § 86.094–21(b)(3) or § 86.1844–01 as applicable.

(d) [Reserved]

(e) *Natural gas.* (1) A natural gas fuel meeting the following specifications, or substantially equivalent specifications approved by the Administrator, must be used for exhaust and evaporative emission testing:

TEM

Item	Value [1]
Methane, CH_4	Minimum, 89.0 mole percent.
Ethane, C_2H_6	Maximum, 4.5 mole percent.
C_3 and higher	Maximum, 2.3 mole percent.
C_6 and higher	Maximum, 0.2 mole percent.
Oxygen	Maximum, 0.6 mole percent.
Inert gases (sum of CO_2 and N_2).	Maximum, 4.0 mole percent.

[1] All parameters are based on the reference procedures in ASTM D1945 (incorporated by reference in § 86.1).

(2) The natural gas at ambient conditions must have a distinctive odor potent enough for its presence to be detected down to a concentration in air of not over one-fifth of the lower limit of flammability.

(3) Natural gas representative of commercially available natural gas fuel generally available through retail outlets shall be used in service accumulation for natural gas-fueled vehicles.

(4) A natural gas fuel meeting different specifications may be used for testing and service accumulation if all the following conditions are met:

(i) The alternate test fuel is commercially available.

(ii) Information acceptable to the Administrator is provided to show that only the designated fuel will be used in customer service.

(iii) The Administrator must provide advance written approval for the alternate test fuel.

(f) *Liquefied petroleum gas fuel.* (1) Liquefied petroleum gas fuel used for exhaust and evaporative emission testing and in service accumulation shall be commercially available liquefied petroleum gas fuel.

(i) Manufacturers shall recommend the liquefied petroleum gas fuel to be used for testing and service accumulation.

(ii) The Administrator shall determine the liquefied petroleum gas fuel to be used for testing and service accumulation.

(2) Other liquefied petroleum gas fuels may be used for testing and service accumulation provided:

(i) They are commercially available; and

(ii) Information, acceptable to the Administrator, is provided to show that only the designated fuel would be used in customer service; and

(iii) Written approval from the Administrator of the fuel specifications must be provided prior to the start of testing.

(3) The specification range of the fuel to be used under paragraphs (f)(1) and (2) of this section shall be measured in accordance with ASTM D2163 (incorporated by reference in § 86.1).

(g) Fuels not meeting the specifications set forth in this section may be used only with the advance approval of the Administrator.

[59 FR 48506, Sept. 21, 1994, as amended at 60 FR 34342, June 30, 1995; 62 FR 47120, Sept. 5, 1997; 63 FR 24448, May 4, 1998; 64 FR 23921, May 4, 1999; 65 FR 8277, Feb. 18, 2000; 79 FR 23694, Apr. 28, 2014; 79 FR 36657, June 30, 2014]

§ 86.114–94 Analytical gases.

(a) *Analyzer gases.* (1) Gases for the CO and CO_2 analyzers shall be single blends of CO and CO_2 respectively using nitrogen as the diluent.

(2) Gases for the THC analyzer shall be:

(i) Single blends of propane using air as the diluent; and

(ii) Optionally, for response factor determination, single blends of methanol using air as the diluent.

(3) Gases for the methane analyzer shall be single blends of methane using air as the diluent.

(4) Gases for the NO_X analyzer shall be single blends of NO named as NO_X. with a maximum NO_2 concentration of 5 percent of the nominal value, using nitrogen as the diluent.

(5) Fuel for FIDs and HFIDs and the methane analyzer shall be a blend of 40 ±2 percent hydrogen with the balance being helium. The mixture shall contain less than one ppm equivalent carbon response. 98 to 100 percent hydrogen fuel may be used with advance approval by the Administrator.

(6) The allowable zero gas (air or nitrogen) impurity concentrations shall not exceed 1 ppm equivalent carbon response, 1 ppm carbon monoxide, 0.04 percent (400 ppm) carbon dioxide, and 0.1 ppm nitric oxide.

(7) ''Zero grade air'' includes artificial ''air'' consisting of a blend of nitrogen and oxygen with oxygen concentrations between 18 and 21 mole percent.

(8) The use of precision blending devices (gas dividers) to obtain the required calibration, as defined below, is acceptable, provided that the calibration curves they produce name a calibration gas within 2 percent of its certified concentration. This verification shall be performed at between 15 and 50 percent of the full scale concentration of the range and shall be included with each gas calibration incorporating a blending device. Alternative procedures to verify the validity of the analyzer calibration curves generated using a gas divider are acceptable provided the procedures are approved in advance by the Administrator.

(b) Calibration gases (not including methanol) shall be traceable to within one percent of NIST (formerly NBS) gas standards, or other gas standards which have been approved by the Administrator.

(c) Span gases (not including methanol) shall be accurate to within two percent of true concentration, where true concentration refers to NIST (formerly NBS) gas standards, or other gas standards which have been approved by the Administrator.

(d) Methanol in air gases used for response factor determination shall:

(1) Be traceable to within ±2 percent of NIST (formerly NBS) gas standards, or other standards which have been approved by the Administrator; and

(2) Remain within ±2 percent of the labeled concentration. Demonstration of stability shall be based on a quarterly measurement procedure with a precision of ±2 percent (two standard deviations), or other method approved by the Administrator. The measurement procedure may incorporate multiple measurements. If the true concentration of the gas changes by more than two percent, but less than ten percent, the gas may be relabeled with the new concentration.

[56 FR 25773, June 5, 1991, as amended at 60 FR 34342, June 30, 1995]

§ 86.115–78 EPA dynamometer driving schedules.

(a) The driving schedules for the Urban Dynamometer Driving Schedule, US06, SC03, and the New York City Cycles are specified in appendix I of this part. The driving schedules are defined by a smooth trace drawn through the specified speed vs. time relationships. They each consist of a distinct non-repetitive series of idle, acceleration, cruise, and deceleration modes of various time sequences and rates.

(b) The driver should attempt to follow the target schedule as closely as possible (refer to § 86.128 for additional cycle driving instructions). The speed tolerance at any given time for these schedules, or for a driver's aid chart approved by the Administrator, are as follows:

(1) The upper limit is 2 mph (3.2 km/h) higher than the highest point on the trace within 1 second of the given time.

(2) The lower limit is 2 mph (3.2 km/h) lower than the lowest point on the trace within 1 second of the given time.

(3)(i) Speed variations greater than the tolerances (such as may occur during gear changes or braking spikes) are acceptable, provided they occur for less than 2 seconds on any occasion and are clearly documented as to the time and speed at that point of the driving schedule.

(ii) When conducted to meet the requirements of § 86.129–94 or § 86.153–98(d), up to three additional occurrences of speed variations greater than the tolerance are acceptable, provided they occur for less than 15 seconds on any occasion, and are clearly documented as to the time and speed at that point of the driving schedule.

(4) Speeds lower than those prescribed are acceptable, provided the vehicle is operated at maximum available power during such occurrences.

(5) When conducted to meet the requirements of § 86.129–94, § 86.132–96, § 86.146–96, or § 86.153–98(d), the speed tolerance shall be as specified above, except that the upper and lower limits shall be 4 mph (6.4 km/h).

(c) Figures B78–4(a) and B78–4(b) show the range of acceptable speed tolerances for typical points. Figure B78–4(a) is typical of portions of the speed curve which are increasing or decreasing throughout the 2-second time interval. Figure B78–4(b) is typical of portions of the speed curve which include a maximum or minimum value.

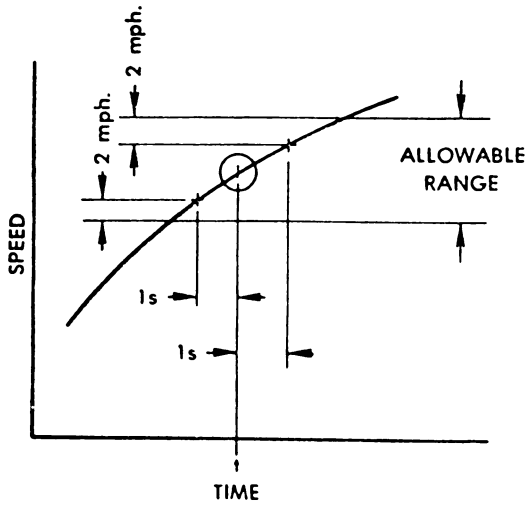

FIGURE B78-4a—DRIVERS TRACE, ALLOWABLE RANGE

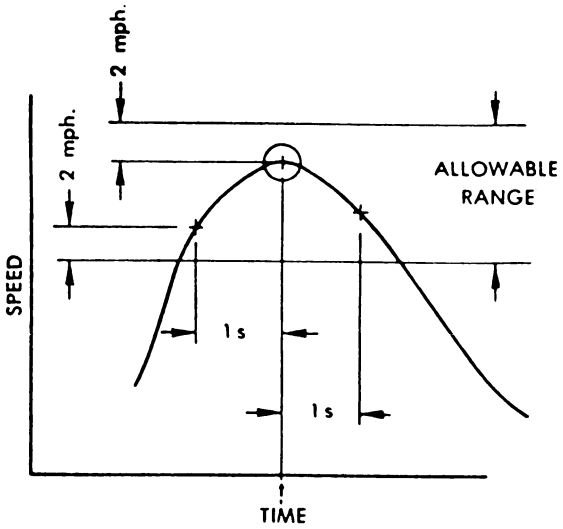

FIGURE B78-4b—DRIVERS TRACE, ALLOWABLE RANGE

[42 FR 32954, June 28, 1977, as amended at 43 FR 52920, Nov. 14, 1978; 58 FR 16030, Mar. 24, 1993; 59 FR 16296, Apr. 6, 1994; 79 FR 23695, Apr. 28, 2014]

§86.116–94 Calibrations, frequency and overview.

(a) Calibrations shall be performed as specified in §86.117 through §86.126.

(b) At least yearly or after any maintenance which could alter background emission levels, evaporative enclosure background emission measurements shall be performed.

(c) At least monthly or after any maintenance which could alter calibration, the following calibrations and checks shall be performed:

(1) Calibrate the THC analyzers (both evaporative and exhaust instruments), methane analyzer, carbon dioxide analyzer, carbon monoxide analyzer, and oxides of nitrogen analyzer (certain analyzers may require more frequent calibration depending on particular equipment and uses).

(2) Calibrate the dynamometer. If the dynamometer receives a weekly performance check (and remains within calibration) the monthly calibration need not be performed.

(3) Perform an organic gas retention and calibration on the evaporative emissions enclosure (see § 86.117–90(c)).

(4) Calibrate the gas meters or flow instrumentation used for providing total flow measurement for particulate sampling.

(5) Check the oxides of nitrogen converter efficiency.

(d) At least weekly or after any maintenance which could alter calibration, the following calibrations and checks shall be performed:

(1) [Reserved]

(2) Perform a CVS system verification, and

(3) Run a performance check on the dynamometer. This check may be omitted if the dynamometer has been calibrated within the preceding month.

(e) The CVS positive displacement pump or Critical Flow Venturi shall be calibrated following initial installation, major maintenance, or as necessary when indicated by the CVS system verification (described in § 86.119).

(f) Sample conditioning columns, if used in the CO analyzer train, should be checked at a frequency consistent with observed column life or when the indicator of the column packing begins to show deterioration.

(g) The Administrator, upon request, may waive the requirement to comply with the specified methanol recovery tolerance (e.g., ±2 percent in §§ 86.117–90 and 86.119–90), and/or the specified methanol retention tolerance (e.g., ±4 percent in § 86.117–90), and instead require compliance with higher tolerances (not to exceed ±6 percent for recoveries and ±8 for retention), provided that:

(1) The Administrator determines that compliance with these specified tolerances is not practically feasible; and

(2) The manufacturer makes information available to the Administrator which indicates that the calibration tests and their results are consistent with good laboratory practice, and that the results are consistent with the results of calibration testing conducted by the Administrator.

[56 FR 25774, June 5, 1991, as amended at 58 FR 58422, Nov. 1, 1993; 59 FR 33913, July 1, 1994; 60 FR 34342, June 30, 1995]

§ 86.117–96 Evaporative emission enclosure calibrations.

The calibration of evaporative emission enclosures consists of three parts: initial and periodic determination of enclosure background emissions (hydrocarbons and methanol); initial determination of enclosure internal volume; and periodic hydrocarbon and methanol retention check and calibration. Ethanol retention checks may be performed instead of methanol retention checks. Alcohol retentions may be omitted if no alcohol-fueled vehicles will be tested in the evaporative enclosure. For evaporative and refueling emission tests with ethanol-gasoline blends that have less than 25% ethanol by volume, if you account for ethanol with a mathematical adjustment as described in § 86.1813–17(a)(1)(iv) instead of measuring ethanol, the testing specifications and diagnostic requirements in this part 86 that are specific to ethanol-gasoline blends do not apply. Alternate calibration methods may be used if shown to yield equivalent or superior results, and if approved in advance by the Administrator; specifically, more extreme temperatures may be used for determining calibration without affecting the validity of test results.

(a) *Initial and periodic determination of enclosure background emissions.* Prior to its introduction into service, annually thereafter, and after any repair that can affect the enclosure background emissions, the enclosure shall be checked to determine that it does not contain materials that will themselves

emit hydrocarbons or methanol. When methanol as well as hydrocarbons are present in the evaporative enclosure, the HFID hydrocarbon concentration measurement includes the partial response of the HFID to methanol plus the hydrocarbons. Determination of the HFID response to methanol, § 86.121, prior to its being placed in service is required for the determination of hydrocarbons. Proceed as follows:

(1) Prepare the enclosure. (i) Variable-volume enclosures may be operated in either latched or unlatched volume configuration, as described in paragraph (b)(1) of this section. Ambient temperatures shall be maintained at 96±3 °F throughout the 4-hour period.

(ii) Fixed-volume enclosures may be operated with inlet and outlet flow streams either closed or open; if inlet and outlet flow streams are open, the air flowing into and out of the enclosure must be monitored in accordance with § 86.107–96(a)(1)(ii)(B). Ambient temperatures shall be maintained at 96±3 °F throughout the 4-hour period.

(iii) For running loss enclosures ambient temperatures shall be maintained at 95±3 °F throughout the 4-hour period. For running loss enclosures designed with a vent for makeup air, the enclosure shall be operated with the vent closed.

(2) The enclosure may be sealed and the mixing fan operated for a period of up to 12 hours before the 4-hour background sampling period begins.

(3) Zero and span (calibrate if required) the hydrocarbon analyzer.

(4) Prior to the background determination, purge the enclosure until a stable background hydrocarbon reading is obtained.

(5) Turn on the mixing blower (if not already on).

(6) Seal enclosure and measure background hydrocarbon concentration, background methanol, temperature, and barometric pressure.

These are the initial readings C_{HCi}, C_{CH_3OHi}, and P_{Bi}, T_i for the enclosure background determination.

(7) Allow the enclosure to stand undisturbed for four hours.

(8) Measure the hydrocarbon concentration on the same FID and the methanol level. These are the final concentrations, C_{HCf} and C_{CH_3OHf}. Also measure final temperature and barometric pressure.

(9) Calculate the mass change of methanol, hydrocarbons, and hydrocarbons plus methanol in the enclosure according to the equations in paragraph (d) of this section.

(i) *Diurnal enclosures.* The enclosure background emissions (hydrocarbons plus methanol) shall not be greater than 0.05g for the 4 hours.

(ii) *Running loss enclosures.* The enclosure background emissions (hydrocarbons plus methanol) shall not be greater than 0.2 grams for the 4 hours.

(b) *Initial determination of enclosure internal volume.* Prior to its introduction into service the enclosure internal volume shall be determined by the following procedure:

(1) Carefully measure the internal length, width and height of the enclosure, accounting for irregularities (such as braces) and calculate the internal volume. For variable-volume enclosures, latch the enclosure to a fixed volume when the enclosure is held at a constant temperature; this nominal volume shall be repeatable within ±0.5 percent of the reported value.

(2)–(3) [Reserved]

(c) *Hydrocarbon and methanol (organic gas) retention check and calibration.* The hydrocarbon and methanol (if the enclosure is used for methanol-fueled vehicles) retention check provides a check upon the calculated volume and also measures the leak rate. The enclosure leak rate shall be determined prior to its introduction into service, following any modifications or repairs to the enclosure that may affect the integrity of the enclosure, and at least monthly thereafter. The methanol retention check must be performed only upon initial installation and after major maintenance, consistent with good engineering judgment. If six consecutive monthly retention checks are successfully completed without corrective action, the enclosure leak rate may be determined quarterly thereafter as long as no corrective action is required.

(1) An enclosure to be used for the diurnal emission test (see § 86.133–96)

shall be calibrated according to the following procedure. Calibration for hydrocarbon and methanol may be conducted simultaneously or in sequential test runs.

(i) Zero and span (calibrate if required) the hydrocarbon analyzer.

(ii) Purge the enclosure until a stable background hydrocarbon reading is obtained.

(iii) Turn on the mixing blowers (if not already on).

(iv) [Reserved]

(v) Turn on the ambient temperature control system (if not already on) and adjust it for an initial temperature of 96 °F (36 °C). On variable-volume enclosures, latch the enclosure to the appropriate volume position for the set temperature. On fixed-volume enclosures close the outlet and inlet flow streams.

(vi) When the enclosure stabilizes at 96±3 °F (36±2 °C), seal the enclosure and measure background hydrocarbon concentration, background methanol, temperature, and barometric pressure. These are the initial readings C_{HCi}, C_{CH_3OHi}, T_i, and P_{Bi} for the enclosure calibration.

(vii) Inject into the enclosure 0.5 to 1.0 grams of pure methanol at a recommended temperature of at least 150 °F (65 °C) and/or 0.5 to 1.0 grams of pure propane at lab ambient temperature. The injected quantity may be measured by volume flow or by mass measurement. The method used to measure the quantity of methanol and propane must have an accuracy of ±0.5 percent of the measured value (less accurate methods may be used with the advance approval of the Administrator).

(viii) After a minimum of 5 minutes of mixing, analyze the enclosure atmosphere for hydrocarbon and methanol content, also record temperature and pressure. These measurements are the final readings for the enclosure calibration as well as the initial readings for the retention check.

(ix) To verify the enclosure calibration, calculate the mass of propane and the mass of methanol using the measurements taken in paragraphs (c)(1)(vi) and (viii) of this section. See paragraph (d) of this section. This quantity must be within ±2 percent of that measured in paragraph (c)(1)(vii) of this section for propane and ±5 percent for methanol. Evaluate long-term trends using good engineering judgment to minimize measurement bias. Keep records to document such evaluations and make them available to EPA upon request.

(x) For variable-volume enclosures, unlatch the enclosure from the nominal volume configuration. For fixed-volume enclosures, open the outlet and inlet flow streams.

(xi) Start cycling the ambient temperature from 96 °F to 72 °F and back to 96 °F over a 24-hour period, according to the profile specified in § 86.133–96 and appendix II of this part, within 15 minutes of sealing the enclosure.

(xii) At the completion of the 24-hour cycling period, analyze the enclosure atmosphere for hydrocarbon and methanol content; determine the net withdrawn methanol (in the case of diurnal emission testing with fixed volume enclosures); record temperature and barometric pressure. These are the final readings for the hydrocarbon and methanol retention check. The final hydrocarbon and methanol mass, calculated in paragraph (d) of this section, shall be within three percent of that determined in paragraph (c)(1)(viii) of this section. (For 1991–1995 calendar years, the difference may exceed ±3 percent for methanol, provided it does not exceed ±6 percent.)

(2) An enclosure to be used for the running loss test (see § 86.134–96) shall meet the calibration and retention requirements of § 86.117–90(c).

(3) Enclosures calibrated according to the procedures specified in either paragraph (c)(1) or (c)(2) of this section may be used for hot soak testing (see § 86.138).

(d) *Calculations.* (1) The calculation of net methanol and hydrocarbon mass change is used to determine enclosure background and leak rate. It is also used to check the enclosure volume measurements. The methanol mass change is calculated from the initial and final methanol samples, the net withdrawn methanol (in the case of diurnal emission testing with fixed-volume enclosures), and initial and final temperature and pressure according to the following equation:

$$M_{HC} = \left(kV_n \times 10^{-4}\right) \times \left(\frac{\left(C_{HC_f} - rC_{CH_3OH_f}\right)P_{B_f}}{T_f} - \frac{\left(C_{HC_i} - rC_{CH_3OH_i}\right)P_{B_i}}{T_i} \right) + \left(M_{HC,out} - M_{HC,in}\right)$$

Where:

(i) M_{CH3OH} = Methanol mass change, μg.

(ii) V = Enclosure volume, ft³, as measured in paragraph (b)(1) of this section.

(iii)–(iv) [Reserved]

(v) V_E = Volume of sample withdrawn, ft³. Sample volumes must be corrected for differences in temperature to be consistent with determination of V_n, prior to being used in the equation.

(vi) P_B = Barometric pressure at time of sampling, in. Hg.

(vii) C_{MS} = GC concentration of test sample.

(viii) AV = Volume of absorbing reagent in impinger (ml).

(ix) i = Initial sample.

(x) f = Final sample.

(xii) 1 = First impinger.

(xiii) 2 = Second impinger.

(xiv) M_{CH3OH},out = mass of methanol exiting the enclosure, in the case of fixed volume enclosures for diurnal emission testing, μg.

(xv) M_{CH3OH},in = mass of methanol exiting the enclosure, in the case of fixed volume enclosures for diurnal emission testing, μg.

(2) The hydrocarbon mass change is calculated from the initial and final FID readings of hydrocarbon concentration, methanol concentration with FID response to methanol, the net withdrawn hydrocarbon and methanol (in the case of diurnal emission testing with fixed-volume enclosures), and initial and final temperature and pressure according to the following equation:

$$M_{HC} = \left(kV_n \times 10^{-4}\right) \times \left(\frac{\left(C_{HC_f} - rC_{CH_3OH_f}\right)}{T_f} - \frac{\left(C_{HC_i} - rC_{CH_3OH_i}\right)P_{B_i}}{T_i} \right) + M_{HC,out} - M_{HC,in}$$

Where,

(i) M_{HC} = Hydrocarbon mass change, g.

(ii) C_{HC} = FID hydrocarbon concentration as ppm carbon, that is, ppm propane × 3, including FID response to methanol in the sample.

(iii) C_{CH3OH} = Methanol concentration as ppm carbon

$$= \frac{1.501 \times 10^{-3} \times T_E}{P_B \times V_E} \left[\left(C_{S1} \times AV_1\right) + \left(C_2 \times AV_2\right) \right]$$

(iv) V = Enclosure volume ft³ (m³), as measured in paragraph (b)(1) of this section.

(v) r = FID response factor to methanol.

(vi) P_B = Barometric pressure, in. Hg. (kPa).

(vii) T = Enclosure ambient temperature, R(K).

(viii) i = Indicates initial reading.

(ix) f = Indicates final reading.

(x)(A) k = 3.05.

(B) For SI units, k = 17.60.

(xi) $M_{HC,\ out}$ = mass of hydrocarbon exiting the enclosure, in the case of fixed-volume enclosures for diurnal emission testing, g.

(xii) $M_{HC,\ in}$ = mass of hydrocarbon entering the enclosure, in the case of

fixed-volume enclosures for diurnal emission testing, g.

(3) For variable-volume enclosures, defined in § 86.107(a)(1)(i), the following simplified form of the hydrocarbon mass change equation may be used:

$$M_{HC} = \left(\frac{kP_B V_n \times 10^{-4}}{T}\right) \times \left[\left(C_{HC_f} - rC_{CH_3OH_f}\right) - \left(C_{HC_i} - rC_{CH_3OH_i}\right)\right]$$

(e) *Calibration of equipment for point-source testing of running losses.* For the point-source method, the running loss fuel vapor sampling system shall be calibrated as a CVS system, as specified in § 86.119, with the additional specification that the vapor sampling system verification be conducted as follows:

(1) The following ''gravimetric'' technique can be used to verify that the vapor sampling system and analytical instruments can accurately measure a mass of gas that has been injected into the system. If the vapor sampling system will be used only in the testing of petroleum-fueled engines, the system verification may be performed using propane. If the vapor sampling system will be used with methanol-fueled vehicles as well as petroleum-fueled vehicles, the system verification performance check must include a methanol check in addition to the propane check. (Verification can also be accomplished by constant flow metering using critical flow orifice devices.)

(i) Obtain a small cylinder that has been charged with pure propane gas. Obtain another small cylinder that has been charged with pure methanol if the system will be used for methanol-fueled vehicle testing. Since this cylinder will be heated to 150–155 °F, care must be taken to ensure that the liquid volume of methanol placed in the cylinder does not exceed approximately one-half of the total volume of the cylinder.

(ii) Determine a reference cylinder weight to the nearest 0.01 grams.

(iii) Operate the vapor sampling system in the normal manner and release a known quantity of pure propane into the most frequently used fuel vapor collector during the sampling period (approximately 5 minutes).

(iv) Continue to operate the vapor sampling system in the normal manner and release a known quantity of pure methanol into the system during the sampling period (approximately 5 minutes).

(v) The calculations of § 86.144 are performed in the normal way, except in the case of propane. The density of propane (17.30 g/ft^3/carbon atom (0.6109 kg/m^3/carbon atom)) is used in place of the density of exhaust hydrocarbons. In the case of methanol, the density of 37.71 g/ft^3 (1.332 kg/m^3) is used.

(vi) The gravimetric mass is subtracted from the vapor sampling system measured mass and then divided by the gravimetric mass to determine the percent accuracy of the system.

(vii) The cause for any discrepancy greater than ±2 percent must be found and corrected.

(2) This procedure shall be conducted in the point-source running loss test environment with the collector installed in a vehicle in the normal test configuration. The fuel of the test vehicle shall either be diesel, or it shall be kept under 100 °F (38 °C). Two to six grams of pure propane and two to six grams of pure methanol shall be injected into the collector while the vehicle is operated over one Urban Dynamometer Driving Schedule (UDDS), as described in § 86.115 and appendix I of this part. The propane and methanol injections shall be conducted at the ambient temperature of 95±5 °F (35±3 °C).

[58 FR 16030, Mar. 24, 1993, as amended at 60 FR 34343, June 30, 1995; 60 FR 43890, Aug. 23, 1995; 70 FR 72927, Dec. 8, 2005; 73 FR 38293, July 3, 2008; 79 FR 23695, Apr. 28, 2014]

§ 86.118–00 Dynamometer calibrations.

(a) The dynamometer shall be calibrated at least once each month or performance verified at least once each week and then calibrated as required.

(b) For large single roll electric dynamometers or equivalent dynamometer configurations, the dynamometer adjustment settings for each vehicle's emission test sequence shall be verified by comparing the force imposed during dynamometer operation with actual road load force.

[61 FR 54891, Oct. 22, 1996]

§ 86.119–90 CVS calibration.

The CVS is calibrated using an accurate flowmeter and restrictor valve. Measurements of various parameters are made and related to flow through the unit. Procedures used by EPA for both PDP and CFV are outlined below. Other procedures yielding equivalent results may be used if approved in advance by the Administrator. After the calibration curve has been obtained, verification of the entire system can be performed by injecting a known mass of gas into the system and comparing the mass indicated by the system to the true mass injected. An indicated error does not necessarily mean that the calibration is wrong, since other factors can influence the accuracy of the system, e.g., analyzer calibration. A verification procedure is found in paragraph (c) of this section.

(a) *PDP calibrations.* (1) The following calibration procedure outlines the equipment, the test configuration, and the various parameters which must be measured to establish the flow rate of the CVS pump. All the parameters related to the pump are simultaneously measured with the parameters related to a flowmeter which is connected in series with the pump. The calculated flow rate ft^3/min (at pump inlet absolute pressure and temperature) can then be plotted versus a correlation function which is the value on a specific combination of pump parameters. The linear equation which relates the pump flow and the correlation function is then determined. In the event that a CVS has a multiple speed drive, a calibration for each range used must be performed.

(2) This calibration procedure is based on the measurement of the absolute values of the pump and flowmeter parameters that relate the flow rate at each point. Three conditions must be maintained to assure the accuracy and integrity of the calibration curve. First, the pump pressures should be measured at taps on the pump rather than at the external piping on the pump inlet and outlet. Pressure taps that are mounted at the top center and bottom center of the pump drive headplate are exposed to the actual pump cavity pressures, and therefore reflect the absolute pressure differentials. Secondly, temperature stability must be maintained during the calibration. The laminar flowmeter is sensitive to inlet temperature oscillations which cause the data points to be scattered. Gradual changes (±2 °F (1.1 °C)) in temperature are acceptable as long as they occur over a period of several minutes. Finally, all connections between the flowmeter and the CVS pump must be absolutely void of any leakage.

(3) During an exhaust emission test the measurement of these same pump parameters enables the user to calculate the flow rate from the calibration equation.

(4) Connect a system as shown in Figure B90–8. Although particular types of equipment are shown, other configurations that yield equivalent results may be used if approved in advance by the Administrator. For the system indicated, the following data with given accuracy are required:

CALIBRATION DATA MEASUREMENTS

Parameter	Symbol	Units	Tolerances
Barometric pressure (corrected).	P_B	in. Hg (kPa)	±0.01 in. Hg (±0.034 kPa)
Ambient temperature	T_A	°F(°C)	±0.5 °F (±0.28 °C)
Air temperature into LFE	ETI	°F(°C)	±0.25 °F (±0.14 °C)
Pressure depression upstream of LFE.	EPI	in. H_2O (kPa)	±0.05 in. H_{20} (±0.012 kPa)

CALIBRATION DATA MEASUREMENTS—Continued

Parameter	Symbol	Units	Tolerances
Pressure drop across the LFE matrix.	EDP	in. H_2O (kPa)	±0.005 in. H_2O (±0.001 kPa)
Air temperature at CVS pump inlet.	PTI	°F(°C)	±0.5 °F (±0.3 °C)
Pressure depression at CVS pump inlet.	PPI	in. fluid (kPa)	±0.05 in. fluid (±0.022 kPa)
Specific gravity of manometer fluid (1.75 oil).	Sp. Gr.		

CALIBRATION DATA MEASUREMENTS—Continued

Parameter	Symbol	Units	Tolerances
Pressure head at CVS pump outlet.	PPO	in. fluid (kPa)	±0.05 in. fluid (±0.022 kPa)
Air temperature at CVS pump outlet (optional).	PTO	°F(°C)	±0.5 °F (±0.28 °C)
Pump revolutions during test period.	N	Revs	±1 Rev.
Elapsed time for test period	t	sec	±0.05 sec.

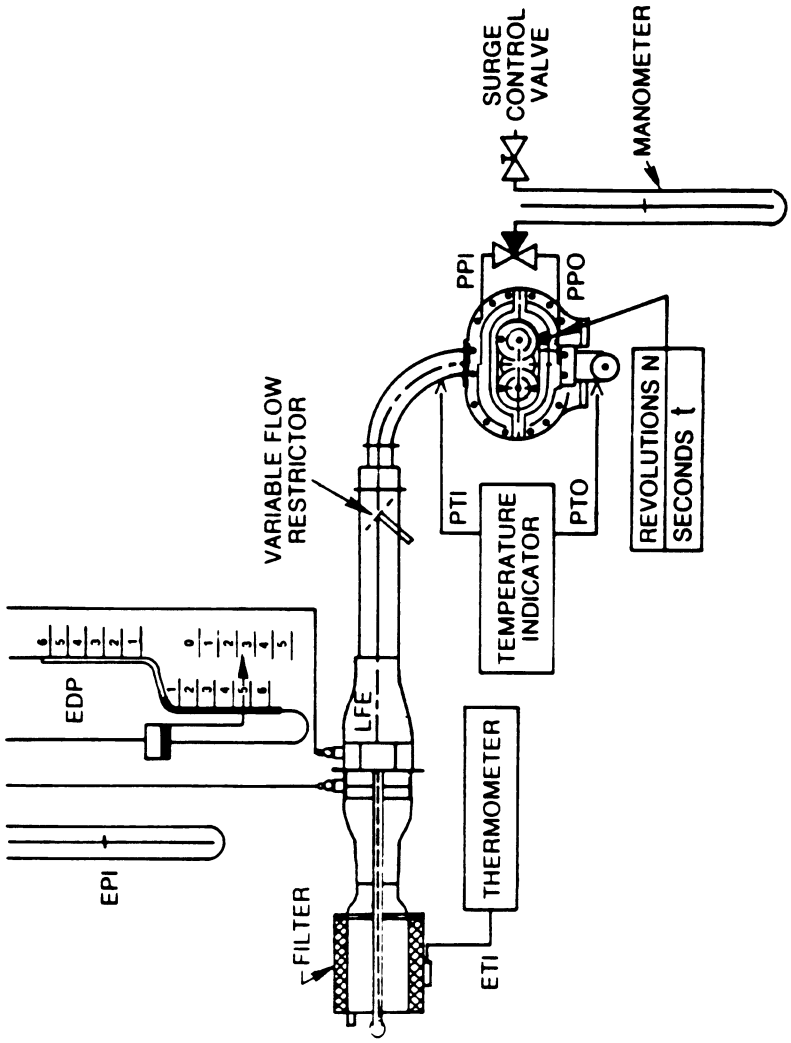

FIGURE B90–8 PDP-CVS CALIBRATION CONFIGURATION

(5) After the system has been connected as shown in Figure B90–8, set the variable restrictor in the wide open position and run the CVS pump for 20 minutes. Record the calibration data.

(6) Reset the restrictor valve to a more restricted condition in an increment of pump inlet depression (about 4 in. H_2O (1.0 kPa) that will yield a minimum of six data points for the total calibration. Allow the system to stabilize for 3 minutes and repeat the data acquisition.

(7) Data analysis:

(i) The air flow rate, Q_s, at each test point is calculated in standard cubic feet per minute from the flowmeter data using the manufacturer's prescribed method.

(ii) The air flow rate is then converted to pump flow, V_o, in cubic feet per revolution at absolute pump inlet temperature and pressure:

$V_o = (Q_s/n) \times (T_p/528) \times (29.92/P_p)$

Where:

(A) V_o = Pump flow ft³/rev (m³/rev) at T_p, P_p.
(B) Q_s = Meter air flow rate in standard cubic feet per minute, standard conditions are 68 °F, 29.92 in. Hg (20 °C, 101.3 kPa).
(C) n = Pump speed in revolutions per minute.
(D)(*1*) T_p = Pump inlet temperature, °R(°K) = PTI + 460.

(*2*) *For SI units*, T_p = PTI + 273.

(E)(*l*) P_p = Absolute pump inlet pressure, in. Hg. (kPa) = P_B − PPI (SP.GR./13.57).

(*2*) *For SI units*, $P_p = P_B$ − PPI.

Where:

(F) P_B = barometric pressure, in. Hg. (kPa).
(G) PPI = Pump inlet depression, in. fluid (kPa).
(H) SP.GR. = Specific gravity of manometer fluid relative to water.

(iii) The correlation function at each test point is then calculated from the calibration data:

$$X_o = \frac{1}{n}\sqrt{\frac{\Delta P}{P_e}}$$

Where:

(A) X_o = correlation function.
(B) ΔP_p = the pressure differential from pump inlet to pump outlet, in. Hg (kPa) = $P_e - P_p$.

(C)(*1*) P_e = Absolute pump outlet pressure, in Hg, (kPa) = $_{PB}$ + PPO (SP.GR./13.57).

(*2*) *For SI units*, $P_e = P_B$ + PPO.

Where:

(D) PPO = Pressure head at pump outlet, in. fluid (kPa).
(iv) A linear least squares fit is performed to generate the calibration equations which have the forms:

$V_o = D_o - M(X_o)$
$n = A - B(\Delta P_p)$

D_o, M, A, and B are the slope-intercept constants describing lines.

(8) A CVS system that has multiple speeds should be calibrated on each speed used. The calibration curves generated for the ranges will be approximately parallel and the intercept values, D_o, will increase as the pump flow range decreases.

(9) If the calibration has been performed carefully, the calculated values from the equation will be within ±0.50 percent of the measured value of V_o. Values of M will vary from one pump to another, but values of D_o for pumps of the same make, model, and range should agree within ±3 percent of each other. Particulate influx from use will cause the pump slip to decrease as reflected by lower values for M. Calibrations should be performed at pump start-up and after major maintenance to assure the stability of the pump slip rate. Analysis of mass injection data will also reflect pump slip stability.

(b) *CFV calibration*. (1) Calibration of the CFV is based upon the flow equation for a critical venturi. Gas flow is a function of inlet pressure and temperature:

$$Q_s = \frac{K_v P}{\sqrt{T}}$$

Where:

(i) Q_s = Flow.
(ii) K_v = Calibration coefficient.
(iii) P = Absolute pressure.
(iv) T = Absolute temperature.

The calibration procedure described below establishes the value of the calibration coefficient at measured values of pressure, temperature and air flow.

(2) The manufacturer's recommended procedure shall be followed for calibrating electronic portions of the CFV.

(3) Measurements necessary for flow calibration are as follows:

CALIBRATION DATA MEASUREMENTS

Parameter	Symbol	Units	Tolerances
Barometric pressure (corrected)	P_b	Inches Hg (kPa)	±.01 in Hg (±.034 kPa)
Air temperature, flowmeter	ETI	°F (°C)	±25 °F (±14 °C)
Pressure depression upstream of LFE	EPI	Inches H_2O (kPa)	±.05 in H_2O (±.012 kPa)
Pressure drop across LFE matrix	EDP	Inches H_2O (kPa)	±.005 in H_2O (±.001 kPa)
Air flow	Q_s	Ft³/min. (m³/min,)	±.5 pct

CALIBRATION DATA MEASUREMENTS—Continued

Parameter	Symbol	Units	Tolerances
CFV inlet depression	PPI	Inches fluid (kPa)	±.13 in fluid (±.055 kPa)
CFV outlet pressure	PPO	Inches Hg (kPa)	±0.05 in. Hg (±0.17 kPa) [1]
Temperature at venturi inlet	T_v	°F (°C)	±0.5 °F (±0.28 °C)
Specific gravity of manometer fluid (1.75 oil)	Sp. Gr.		

[1] Requirement begins August 20, 2001.

(4) Set up equipment as shown in Figure B90–9 and check for leaks. Any leaks between the flow measuring device and the critical flow venturi will seriously affect the accuracy of the calibration.

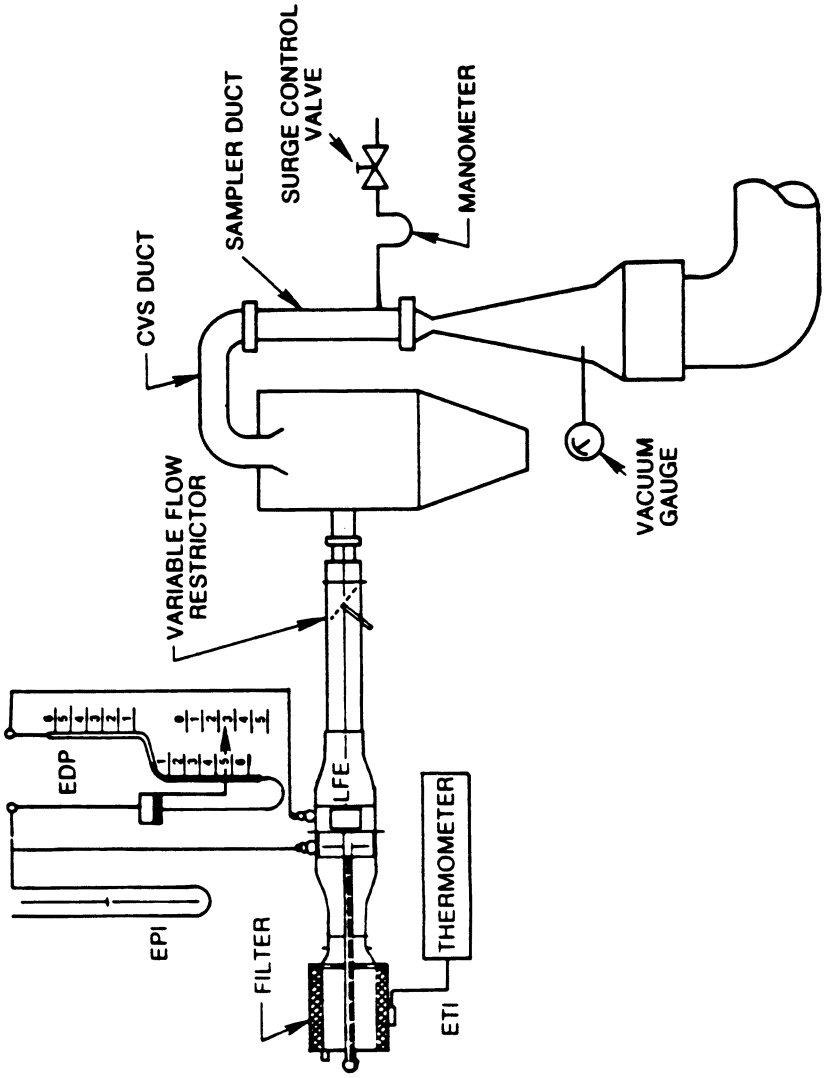

FIGURE B90-9 CFV-CVS CALIBRATION CONFIGURATION

(5) Set the variable flow restrictor to the open position, start the blower, and allow the system to stabilize. Record data from all instruments.

(6) Vary the flow restrictor and make at least 8 readings across the critical flow range of the venturi.

(7) *Data analysis:* The data recorded during the calibration are to be used in the following calculations:

(i) The air flow rate, Q_s, at each test point is calculated in standard cubic feet per minute from the flow meter data using the manufacturer's prescribed method.

(ii) Calculate values of the calibration coefficient for each test point:

$$K_v = \frac{Q_s\sqrt{T_v}}{P_v}$$

Where:

(A) Q_s = Flow rate in standard cubic feet per minute, standard conditions are 68 °F 29.92 in. Hg (20 °C, 101.3 kPa).

(B) T_v = Temperature at venturi inlet, °R(°K).

(C)(*1*) P_v = Pressure at venturi inlet, mm Hg (kPa) = P_B − PPI (SP.GR./13.57).

(*2*) *For SI units*, $P_v = P_B$ − PPI.

Where:

(D) PPI = Venturi inlet pressure depression, in. fluid (kPa).

(E) SP.GR. = Specific gravity of manometer fluid, relative to water.

(iii) Plot K_v as a function of venturi inlet pressure. For sonic flow K_v will have a relatively constant value. As pressure decreases (vacuum increases), the venturi becomes unchoked and K_v decreases. See Figure B90–10.

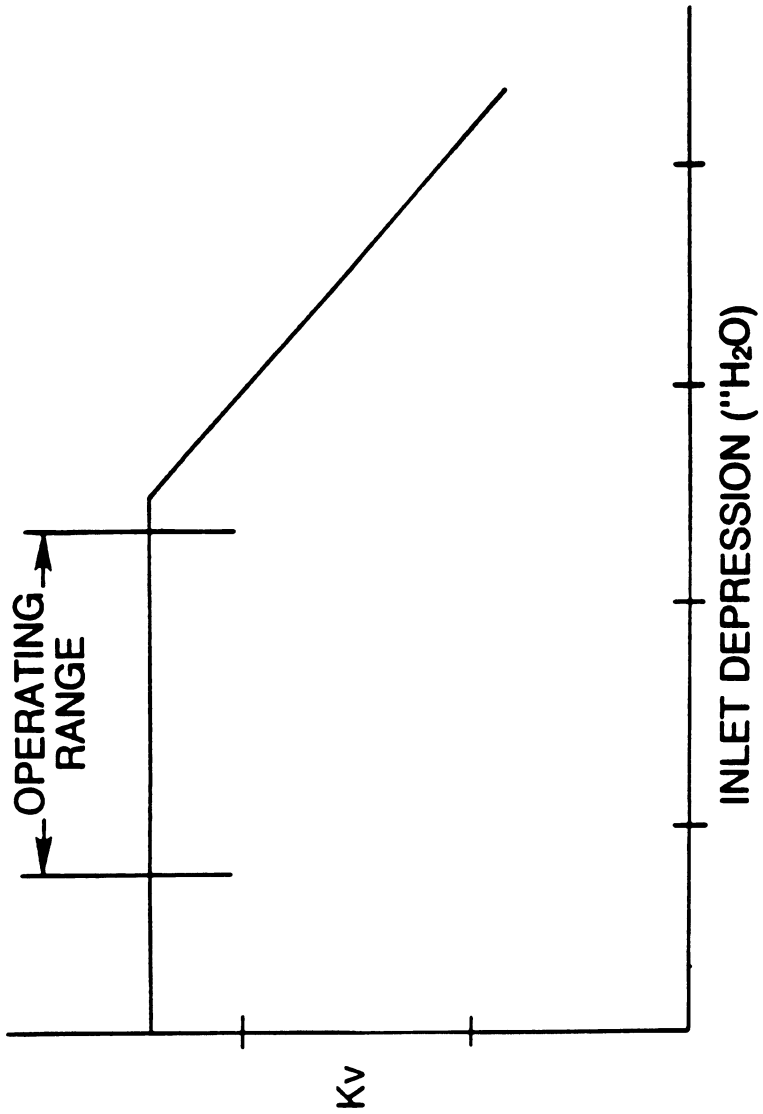

FIGURE B90-10 SONIC FLOW CHOKING

(iv) For a minimum of 8 points in the critical region calculate an average K_v and the standard deviation.

(v) If the standard deviation exceeds 0.3 percent of the average K_v take corrective action.

(8) Calculation of a parameter for monitoring sonic flow in the CFV during exhaust emissions tests:

(i) *Option 1.* (A) CFV pressure ratio. Based upon the calibration data selected to meet the criteria for paragraphs (d)(7) (iv) and (v) of this section, in which K_v is constant, select the data values associated with the calibration point with the lowest absolute venturi

inlet pressure. With this set of calibration data, calculated the following CFV pressure ratio limit, $Pr_{ratio\text{-}lim}$:

$$Pr_{ratio\text{-}lim} = \frac{P_{out\text{-}cal}}{P_{in\text{-}cal}}$$

Where:

$P_{in\text{-}cal}$ = Venturi inlet pressure (PPI in absolute pressure units), and

$P_{out\text{-}cal}$ = Venturi outlet pressure (PPO in absolute pressure units), measured at the exit of the venturi diffuser outlet.

(B) The venturi pressure ratio ($Pr_{ratio\text{-}i}$) during all emissions tests must be less than, or equal to, the calibration pressure ratio limit ($Pr_{ratio\text{-}lim}$) derived from the CFV calibration data, such that:

$$\frac{P_{out\text{-}i}}{P_{in\text{-}i}} = Pr_{ratio\text{-}i} \leq Pr_{ratio\text{-}lim}$$

Where:

$P_{in\text{-}i}$ and $P_{out\text{-}i}$ are the venturi inlet and outlet pressures, in absolute pressure units, at each i-th interval during the emissions test.

(ii) *Option 2*. Other methods: With prior Administrator approval, any other method may be used that assure that the venturi operates at sonic conditions during emissions tests, provided the method is based upon sound engineering principles.

(c) *CVS System Verification*. The following ''gravimetric'' technique can be used to verify that the CVS and analytical instruments can accurately measure a mass of gas that has been injected into the system. If the CVS and analytical system will be used only in the testing of petroleum-fueled engines, the system verification may be performed using either propane or carbon monoxide. If the CVS and analytical system will be used with methanol-fueled vehicles as well as petroleum-fueled vehicles, system verification performance check must include a methanol check in addition to either the propane or carbon monoxide check. (Verification can also be accomplished by constant flow metering using critical flow orifice devices.)

(1) Obtain a small cylinder that has been charged with pure propane or carbon monoxide gas (CAUTION—carbon monoxide is poisonous).

(2) Determine a reference cylinder weight to the nearest 0.01 grams.

(3) Operate the CVS in the normal manner and release a quantity of pure propane or carbon monoxide into the system during the sampling period (approximately 5 minutes).

(4) Following completion of step (3) in this paragraph (c) (if methanol injection is required), continue to operate the CVS in the normal manner and release a known quantity of pure methanol (in gaseous form) into the system during the sampling period (approximately five minutes). This step does not need to be performed with each verification, provided that it is performed at least twice annually.

(5) The calculations of § 86.144 are performed in the normal way, except in the case of propane. The density of propane (17.30 g/ft^3/carbon atom (0.6109 kg/m^3/carbon atom)) is used in place of the density of exhaust hydrocarbons. In the case of carbon monoxide, the density of 32.97 g/ft^3 (1.164 kg/m^3) is used. In the case of methanol, the density of 37.71 g/ft^3 (1.332 kg/m^3) is used.

(6) The gravimetric mass is subtracted from the CVS measured mass and then divided by the gravimetric mass to determine the percent accuracy of the system.

(7) The cause for any discrepancy greater than ±2 percent must be found and corrected. (For 1991–1995 calendar years, discrepancies greater than ±2 percent are allowed for the methanol test, provided that they do not exceed ±8 percent for 1991 testing or ±6 percent for 1992–1995 testing.)

[54 FR 14518, Apr. 11, 1989, as amended at 60 FR 34344, June 30, 1995; 62 FR 47121, Sept. 5, 1997; 63 FR 24448, May 4, 1998; 65 FR 8278, Feb. 18, 2000]

§ 86.120–94 Gas meter or flow instrumentation calibration; particulate, methanol and formaldehyde measurement.

(a) Sampling for particulate, methanol and formaldehyde emissions requires the use of gas meters or flow instrumentation to determine flow through the particulate filters, methanol impingers and formaldehyde impingers. These instruments shall receive initial and periodic calibrations as follows:

(1)(i) Install a calibration device in series with the instrument. A critical flow orifice, a bellmouth nozzle, a laminar flow element or an NBS traceable flow calibration device is required as the standard device.

(ii) The flow system should be checked for leaks between the calibration and sampling meters, including any pumps that may be part of the system, using good engineering practice.

(2) Flow air through the calibration system at the sample flow rate used for particulate, methanol, and formaldehyde testing and at the backpressure which occurs during the test.

(3) When the temperature and pressure in the system have stabilized, measure the indicated gas volume over a time period of at least five minutes or until a gas volume of at least ±1 percent accuracy can be determined by the standard device. Record the stabilized air temperature and pressure upstream of the instrument and as required for the standard device.

(4) Calculate air flow at standard conditions as measured by both the standard device and the instrument(s). (Standard conditions are defined as 68 °F (20 °C) and 29.92 in Hg (101.3 kPa).)

(5) Repeat the procedures of paragraphs (a)(2) through (4) of this section using at least two flow rates which bracket the typical operating range.

(6) If the air flow at standard conditions measured by the instrument differs by ±1.0 percent of the maximum operating range or ±2.0 percent of the point (whichever is smaller), then a correction shall be made by either of the following two methods:

(i) Mechanically adjust the instrument so that it agrees with the calibration measurement at the specified flow rates using the criteria of paragraph (a)(6) of this section; or

(ii) Develop a continuous best fit calibration curve for the instrument (as a function of the calibration device flow measurement) from the calibration points to determine corrected flow. The points on the calibration curve relative to the calibration device measurements must be within ±1.0 percent of the maximum operating range of ±2.0 percent of the point (whichever is smaller).

(b) Other systems. A bell prover may be used to calibrate the instrument if the procedure outlined in ANSI B109.1–1973 is used. Prior approval by the Administrator is not required to use the bell prover.

[60 FR 34344, June 30, 1995]

§ 86.121–90 Hydrocarbon analyzer calibration.

The hydrocarbon analyzers shall receive the following initial and periodic calibration. The HFID used with petroleum-fueled diesel vehicles shall be operated at a temperature of 375 °F±10 °F (191 °±6 °C). The HFID used with methanol-fueled vehicles shall be operated at 235 °±15 °F (113±8 °C).

(a) *Initial and periodic optimization of detector response.* Prior to its introduction into service and at least annually thereafter, the FID and HFID hydrocarbon analyzers shall be adjusted for optimum hydrocarbon response. Alternate methods yielding equivalent results may be used, if approved in advance by the Administrator.

(1) Follow the manufacturer's instructions or good engineering practice for instrument startup and basic operating adjustment using the appropriate FID fuel and zero-grade air.

(2) Optimize on the most common operating range. Introduce into the analyzer a propane (methane as appropriate) in air mixture (methanol in air mixture for methanol-fueled vehicles when optional methanol calibrated HFID procedure is used during the 1994 model year) with a propane (or methane or methanol as appropriate) concentration equal to approximately 90 percent of the most common operating range.

(3) One of the following is required for FID or HFID optimization:

(i) For all FIDs and HFIDs, the procedures specified by the applicable FID or HFID manufacturer.

(ii) For Beckman 400 FIDs only, implementation of the recommendations outlined in Society of Automotive Engineers (SAE) paper No. 770141, ''Optimization of Flame Ionization Detector for Determination of Hydrocarbons in Diluted Automobile Exhaust''; author, Glenn D. Reschke.

(iii) For HFIDs only, the following peaking procedure. (A) With the fuel

and air flow rates set in the manufacturer's recommendations, determine the analyzer response from the difference between the span-gas response and the zero gas response. Incrementally adjust the fuel flow above and below the manufacturer's specification. Record the span and zero response at these fuel flows. A plot of the difference between the span and zero response versus the fuel flow will be similar to the one shown in Fig. B87–11. Adjust the fuel-flow rate to the highest setting that produces the maximum analyzer response.

(B) To determine the optimum air flow, use the fuel flow setting determined in paragraph (a)(3)(iii)(A) of this section and vary air flow.

(iv) Alternative procedures may be used if approved in advance by the Administrator.

(4) To determine the optimum air flow, use the FID fuel flow setting determined above and vary air flow.

(5) After the optimum flow rates have been determined, record them for future reference.

(b) *Initial and periodic calibration.* Prior to its introduction into service and monthly thereafter the FID or HFID hydrocarbon analyzers shall be calibrated on all normally used instrument ranges, and, if testing methanol vehicles under the procedure described in § 86.107–90(a)(2)(ii) or § 86.110–90(a)(4), the methanol response factor shall be determined (paragraph (c) of this section). Use the same flow rate as when analyzing sample.

(1) Adjust analyzer to optimize performance.

(2) Zero the hydrocarbon analyzer with zero-grade air.

(3) Calibrate on each normally used operating range with propane in air calibration gases (either methanol or methane in air as appropriate) having nominal concentrations of 15, 30, 45, 60, 75 and 90 percent of that range. For each range calibrated, if the deviation from a least squares best-fit straight line is two percent or less of the value at each data point, concentration values may be calculated by use of a single calibration factor for that range. If the deviation exceeds two percent at any point, the best-fit non-linear equation which represents the data to within two percent of each test point shall be used to determine concentration.

(c) *FID response factor to methanol.* When the FID analyzer is to be used for the analysis of hydrocarbon samples containing methanol, the methanol response factor of the analyzer shall be established. The methanol response factor shall be determined at several concentrations in the range of concentrations in the exhaust sample, using either bag samples or gas bottles meeting the requirements of § 86.114.

(1) The bag sample of methanol for analysis in the FID, if used, shall be prepared using the apparatus shown in Figure B90–11. A known volume of methanol is injected, using a microliter syringe, into the heated mixing zone (250 °F (121 °C)) of the apparatus. The methanol is vaporized and swept into the sample bag with a known volume of zero grade air measured by a gas flow meter meeting the performance requirements of § 86.120.

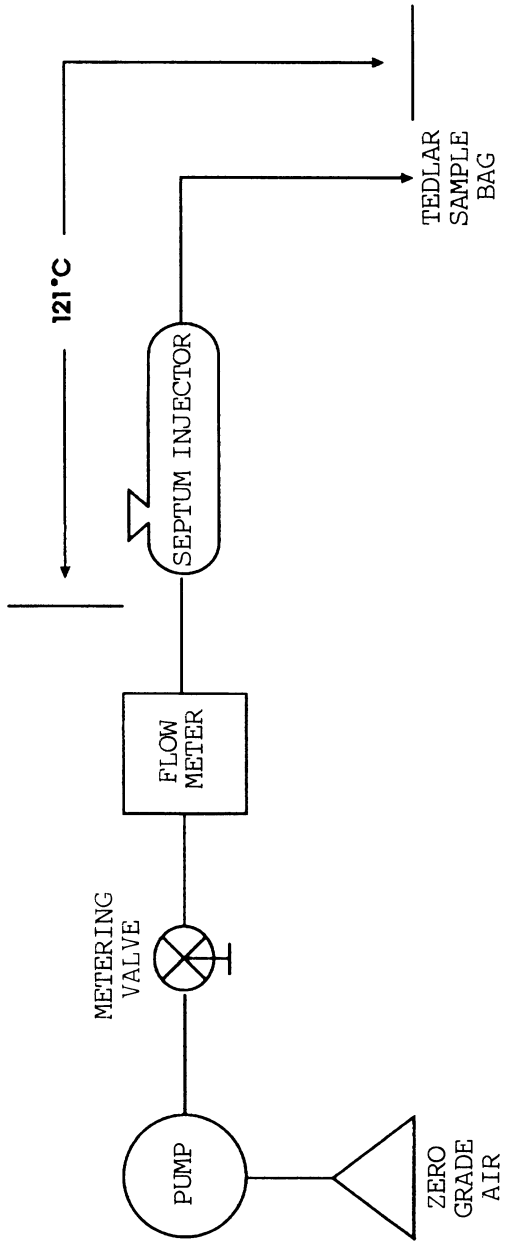

FIGURE B90-11 APPARATUS FOR PREPARATION OF FID METHANOL RESPONSE CALIBRATION MIX

(2) The bag sample is analyzed using the FID.

(3) The FID response factor, r, is calculated as follows:

r = FIDppm/SAMppm

Where:

(i) r = FID response factor.

(ii) FIDppm = FID reading in ppmC.

(iii) SAMppm = methanol concentration in the sample bag, or gas bottle, in ppmC. SAMppm for sample bags

$$= \frac{0.02406 \times \text{Fuel injected} \times \text{Fuel density}}{\text{Air volume} \times \text{Mol. Wt. } CH_3OH}$$

Where:

(iv) 0.02406 = Volume of one mole at 29.92 in. Hg and 68 °F, m^3.

(v) Fuel injected = Volume of methanol injected, ml.

(vi) Fuel density = Density of methanol, 0.7914 g/ml.

(vii) Air volume = Volume of zero grade air, m^3.

(viii) Mol. Wt. CH_3OH = 32.04.

(d) *FID response factor to methane.* When the FID analyzer is to be used for the analysis of gasoline, diesel, methanol, ethanol, liquefied petroleum gas, and natural gas-fueled vehicle hydrocarbon samples, the methane response factor of the analyzer must be established. To determine the total hydrocarbon FID response to methane, known methane in air concentrations traceable to the National Institute of Standards and Technology (NIST) must be analyzed by the FID. Several methane concentrations must be analyzed by the FID in the range of concentrations in the exhaust sample. The total hydrocarbon FID response to methane is calculated as follows:

r_{CH4} = FIDppm/SAMppm

Where:

(1) r_{CH4} = FID response factor to methane.

(2) FIDppm = FID reading in ppmC.

(3) SAMppm = the known methane concentration in ppmC.

[54 FR 14525, Apr. 11, 1989, as amended at 59 FR 48508, Sept. 21, 1994; 60 FR 34345, June 30, 1995; 70 FR 40433, July 13, 2005]

§ 86.122–78 Carbon monoxide analyzer calibration.

The NDIR carbon monoxide analyzer shall receive the following initial and periodic calibrations:

(a) *Initial and periodic interference check.* Prior to its introduction into service and annually thereafter the NDIR carbon monoxide analyzer shall be checked for response to water vapor and CO_2:

(1) Follow the manufacturer's instructions for instrument startup and operation. Adjust the analyzer to optimize performance on the most sensitive range to be used.

(2) Zero the carbon monoxide analyzer with either zero-grade air or zero-grade nitrogen.

(3) Bubble a mixture of 3 percent CO_2 in N_2 through water at room temperature and record analyzer response.

(4) An analyzer response of more than 1 percent of full scale for ranges above 300 ppm full scale or of more than 3 ppm on ranges below 300 ppm full scale will require corrective action. (Use of conditioning columns is one form of corrective action which may be taken.)

(b) *Initial and periodic calibration.* Prior to its introduction into service and monthly thereafter the NDIR carbon monoxide analyzer shall be calibrated.

(1) Adjust the analyzer to optimize performance.

(2) Zero the carbon monoxide analyzer with either zero-grade air or zero-grade nitrogen.

(3) Calibrate on each normally used operating range with carbon monoxide in N_2 calibration gases having nominal concentrations of 15, 30, 45, 60, 75, and 90 percent of that range. Additional calibration points may be generated. For each range calibrated, if the deviation from a least-squares best-fit straight line is 2 percent or less of the value at each data point, concentration values may be calculated by use of a single calibration factor for that range. If the deviation exceeds 2 percent at any point, the best-fit non-linear equation which represents the data to within 2 percent of each test point shall be used to determine concentration.

§ 86.123–78 Oxides of nitrogen analyzer calibration.

The chemiluminescent oxides of nitrogen analyzer shall receive the following initial and periodic calibration.

(a) Prior to introduction into service and at least monthly thereafter the chemiluminescent oxides of nitrogen analyzer must be checked for NO_2 to NO converter efficiency. Figure B78–9

is a reference for paragraphs (a) (1) through (11) of this section.

(1) Follow the manufacturer's instructions for instrument startup and operation. Adjust the analyzer to optimize performance.

(2) Zero the oxides of nitrogen analyzer with zero-grade air or zero-grade nitrogen.

(3) Connect the outlet of the NO_X generator to the sample inlet of the oxides of nitrogen analyzer which has been set to the most common operating range.

(4) Introduce into the NO_X generator analyzer-system an NO in nitrogen (N_2) mixture with an NO concentration equal to approximately 80 percent of the most common operating range. The NO_2 content of the gas mixture shall be less than 5 percent of the NO concentration.

(5) With the oxides of nitrogen analyzer in the NO mode, record the concentration of NO indicated by the analyzer.

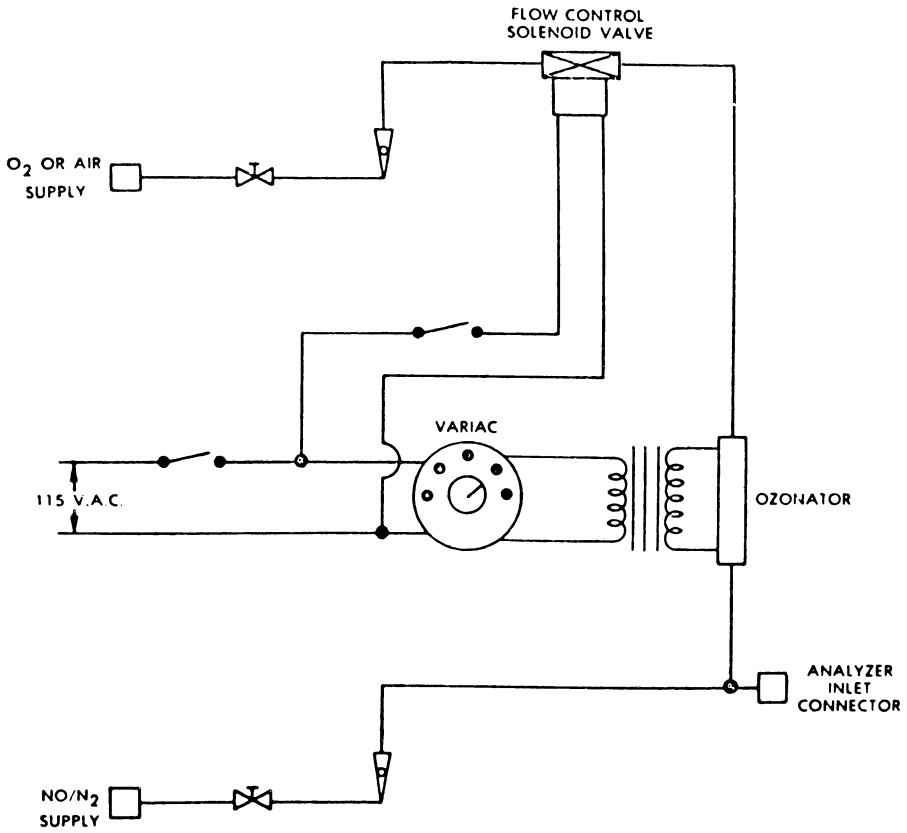

(SEE FIG B78-3 FOR SYMBOL LEGEND)

FIGURE B78-9—NOx CONVERTER EFFICIENCY DETECTOR

(6) Turn on the NO_X generator O_2 (or air) supply and adjust the O_2 (or air) flow rate so that the NO indicated by the analyzer is about 10 percent less than indicated in step (5). Record the concentration of NO in this NO + O_2 mixture.

(7) Switch the NO_X generator to the generation mode and adjust the generation rate so that the NO measured on the analyzer is 20 percent of that measured in step (5). There must be at least 10 percent unreacted NO at this point. Record the concentration of residual NO.

(8) Switch the oxides of nitrogen analyzer to the NO_X mode and measure total NO_X. Record this value.

(9) Switch off the NO_X generation but maintain gas flow through the system. The oxides of nitrogen analyzer will indicate the NO_X in the NO + O_2 mixture. Record this value.

(10) Turn off the NO_X generator O_2 (or air) supply. The analyzer will now indicate the NO_X in the original NO in N_2

mixture. This value should be no more than 5 percent above the value indicated in step (4).

(11) Calculate the efficiency of the NO_X converted by substituting the concentrations obtained into the following equation:

$$\text{Percent Efficiency} = [1 + (a - b)/(c - d)] \times 100$$

where:
a = concentration obtained in step (8).
b = concentration obtained in step (9).
c = concentration obtained in step (6).
d = concentration obtained in step (7).

If converter efficiency is not greater than 90 percent corrective action will be required.

(b) *Initial and periodic calibration.* Prior to its introduction into service and monthly thereafter the chemiluminescent oxides of nitrogen analyzer shall be calibrated on all normally used instrument ranges. Use the same flow rate as when analyzing samples. Proceed as follows:

(1) Adjust analyzer to optimize performance.

(2) Zero the oxides of nitrogen analyzer with zero-grade air or zero-grade nitrogen.

(3) Calibrate on each normally used operating range with NO in N2 calibration gases having nominal concentrations of 15, 30, 45, 60, 75, and 90 percent of that range. For each range calibrated, if the deviation from a least-squares best-fit straight line is 2 percent or less of the value at each data point, concentration values may be calculated by use of a single calibration factor for that range. If the deviation exceeds 2 percent at any point, the best-fit non-linear equation which represents the data to within 2 percent of each test point shall be used to determine concentration.

(c) When testing methanol-fueled vehicles, it may be necessary to clean the analyzer frequently to prevent interference with NO_X measurements (see EPA/600/S3–88/040).

[42 FR 32954, June 28, 1977, as amended at 42 FR 45652, Sept. 12, 1977; 52 FR 47869, Dec. 16, 1987; 58 FR 58422, Nov. 1, 1993; 60 FR 34347, June 30, 1995]

§ 86.124–78 Carbon dioxide analyzer calibration.

Prior to its introduction into service and monthly thereafter the NDIR carbon dioxide analyzer shall be calibrated:

(a) Follow the manufacturer's instructions for instrument startup and operation. Adjust the analyzer to optimize performance.

(b) Zero the carbon dioxide analyzer with either zero-grade air or zero-grade nitrogen.

(c) Calibrate on each normally used operating range with carbon dioxide in N_2 calibration gases with nominal concentrations of 15, 30, 45, 60, 75, and 90 percent of that range. Additional calibration points may be generated. For each range calibrated, if the deviation from a least-squares best-fit straight line is 2 percent or less of the value at each data point, concentration values may be calculated by use of a single calibration factor for that range. If the deviation exceeds 2 percent at any point, the best-fit non-linear equation which represents the data to within 2 percent of each test point shall be used to determine concentration.

§ 86.125–94 Methane analyzer calibration.

Prior to introduction into service and monthly thereafter, the methane analyzer shall be calibrated:

(a) Follow the manufacturer's instructions for instrument startup and operation. Adjust the analyzer to optimize performance.

(b) Zero the methane analyzer with zero-grade air.

(c) Calibrate on each normally used operating range with CH_4 in air with nominal concentrations of 15, 30, 45, 60, 75, and 90 percent of that range. Additional calibration points may be generated. For each range calibrated, if the deviation from a least-squares best-fit straight line is 2 percent or less of the value at each data point, concentration values may be calculated by use of a single calibration factor for that range. If the deviation exceeds 2 percent at any point, the best-fit non-linear equation which represents the data to within 2 percent of each test

point shall be used to determine concentration.

[56 FR 25774, June 5, 1991]

§ 86.126–90 Calibration of other equipment.

Other test equipment used for testing shall be calibrated as often as required by the manufacturer or as necessary according to good practice. Specific equipment requiring calibration are the gas chromatograph and flame ionization detector used in measuring methanol and the high pressure liquid chromatograph (HPLC) and ultraviolet detector for measuring formaldehyde.

[54 FR 14527, Apr. 11, 1989]

§ 86.127–00 Test procedures; overview.

Applicability. The procedures described in this and subsequent sections are used to determine the conformity of vehicles with the standards set forth in subpart A or S of this part (as applicable) for light-duty vehicles and light-duty trucks. Except where noted, the procedures of paragraphs (a) through (b) of this section, § 86.127–96 (c) and (d), and the contents of §§ 86.135–94, 86.136–90, 86.137–96, 86.140–94, 86.142–90, and 86.144–94 are applicable for determining emission results for vehicle exhaust emission systems designed to comply with the FTP emission standards, or the FTP emission element required for determining compliance with composite SFTP standards. Paragraphs (f) and (g) of this section discuss the additional test elements of aggressive driving (US06) and air conditioning (SC03) that comprise the exhaust emission components of the SFTP. Section 86.127–96(e) discusses fuel spitback emissions and paragraphs (h) and (i) of this section are applicable to all vehicle emission test procedures. Section 86.127–00 includes text that specifies requirements that differ from § 86.127–96. Where a paragraph in § 86.127–96 is identical and applicable to § 86.127–00, this may be indicated by specifying the corresponding paragraph and the statement ''[Reserved]. For guidance see § 86.127-96.''

(a) The overall test consists of prescribed sequences of fueling, parking, and operating test conditions. Vehicles are tested for any or all of the following emissions:

(1) Gaseous exhaust THC, CO, NO_X. CO_2 (for petroleum-fueled and gaseous-fueled vehicles), plus CH_3OH and HCHO for methanol-fueled vehicles, plus CH_4 (for vehicles subject to the NMHC and NMHCE standards).

(2) Particulates.

(3) Evaporative HC (for gasoline-fueled, methanol-fueled and gaseous-fueled vehicles) and CH_3OH (for methanol-fueled vehicles). The evaporative testing portion of the procedure occurs after the exhaust emission test; however, exhaust emissions need not be sampled to complete a test for evaporative emissions.

(4) Fuel spitback (this test is not required for gaseous-fueled vehicles).

(b) The FTP Otto-cycle exhaust emission test is designed to determine gaseous THC, CO, CO_2, CH_4, NO_X, and particulate mass emissions from gasoline-fueled, methanol-fueled and gaseous-fueled Otto-cycle vehicles as well as methanol and formaldehyde from methanol-fueled Otto-cycle vehicles, while simulating an average trip in an urban area of 11 miles (18 kilometers). The test consists of engine start-ups and vehicle operation on a chassis dynamometer through a specified driving schedule (see paragraph (a), EPA Urban Dynamometer Driving Schedule, of appendix I to this part). A proportional part of the diluted exhaust is collected continuously for subsequent analysis, using a constant volume (variable dilution) sampler or critical flow venturi sampler.

(c)–(e) [Reserved]. For guidance see § 86.127–96.

(f) The element of the SFTP for exhaust emissions related to aggressive driving (US06) is designed to determine gaseous THC, NMHC, CO, CO_2, CH_4, and NO_X emissions from gasoline-fueled or diesel-fueled vehicles (see § 86.158–00 Supplemental test procedures; overview, and § 86.159–00 Exhaust emission test procedures for US06 emissions). The test cycle simulates urban driving speeds and accelerations that are not represented by the FTP Urban Dynamometer Driving Schedule simulated trips discussed in paragraph (b) of this section. The test consists of vehicle operation on a chassis dynamometer

through a specified driving cycle (see paragraph (g), US06 Dynamometer Driving Schedule, of appendix I to this part). A proportional part of the diluted exhaust is collected continuously for subsequent analysis, using a constant volume (variable dilution) sampler or critical flow venturi sampler.

(g)(1) The element of the SFTP related to the increased exhaust emissions caused by air conditioning operation (SC03) is designed to determine gaseous THC, NMHC, CO, CO_2, CH_4, and NO_X emissions from gasoline-fueled or diesel fueled vehicles related to air conditioning use (see § 86.158–00 Supplemental federal test procedures; overview and § 86.160–00 Exhaust emission test procedure for SC03 emissions). The test cycle simulates urban driving behavior with the air conditioner operating. The test consists of engine startups and vehicle operation on a chassis dynamometer through specified driving cycles (see paragraph (h), SC03 Dynamometer Driving Schedule, of appendix I to this part). A proportional part of the diluted exhaust is collected continuously for subsequent analysis, using a constant volume (variable dilution) sampler or critical flow venturi sampler. The testing sequence includes an approved preconditioning cycle, a 10 minute soak with the engine turned off, and the SC03 cycle with measured exhaust emissions.

(2) The SC03 air conditioning test is conducted with the air conditioner operating at specified settings and the ambient test conditions of:

(i) Air temperature of 95 °F;

(ii) 100 grains of water/pound of dry air (approximately 40 percent relative humidity);

(iii) Simulated solar heat intensity of 850 W/m^2 (see § 86.161–00(d)); and

(iv) air flow directed at the vehicle that will provide representative air conditioner system condenser cooling at all vehicle speeds (see § 86.161–00(e)).

(3) Manufacturers have the option of simulating air conditioning operation during testing at other ambient test conditions provided they can demonstrate that the vehicle tail pipe exhaust emissions are representative of the emissions that would result from the SC03 cycle test procedure and the ambient conditions of paragraph (g)(2) of this section. The Administrator has approved two optional air conditioning test simulation procedures AC1 and AC2 (see § 86.162–00) for only the model years of 2000 through 2002. If a manufacturer desires to conduct simulation SC03 testing for model year 2003 and beyond, the simulation test procedure must be approved in advance by the Administrator (see §§ 86.162–00 and 86.163–00).

(h) Except in cases of component malfunction or failure, all emission control systems installed on or incorporated in a new motor vehicle shall be functioning during all procedures in this subpart. Maintenance to correct component malfunction or failure shall be authorized in accordance with § 86.098–25 or § 86.1834–01 as applicable.

(i) Background concentrations are measured for all species for which emissions measurements are made. For exhaust testing, this requires sampling and analysis of the dilution air. For evaporative testing, this requires measuring initial concentrations. (When testing methanol-fueled vehicles, manufacturers may choose not to measure background concentrations of methanol and/or formaldehyde, and then assume that the concentrations are zero during calculations.)

[61 FR 54891, Oct. 22, 1996, as amended at 64 FR 23921, May 4, 1999]

§ 86.127–12 Test procedures; overview.

Applicability. The procedures described in this subpart are used to determine the conformity of vehicles with the standards set forth in subpart A or S of this part (as applicable) for light-duty vehicles, light-duty trucks, and medium-duty passenger vehicles. Except where noted, the procedures of paragraphs (a) through (d) of this section, and the contents of §§ 86.135–00, 86.136–90, 86.137–96, 86.140–94, 86.142–90, and 86.144–94 are applicable for determining emission results for vehicle exhaust emission systems designed to comply with the FTP emission standards, or the FTP emission element required for determining compliance with composite SFTP standards. Paragraph (e) of this section discusses fuel spitback emissions. Paragraphs (f) and

(g) of this section discuss the additional test elements of aggressive driving (US06) and air conditioning (SC03) that comprise the exhaust emission components of the SFTP. Paragraphs (h) and (i) of this section are applicable to all vehicle emission test procedures.

(a) The overall test consists of prescribed sequences of fueling, parking, and operating test conditions. Vehicles are tested for any or all of the following emissions, depending upon the specific test requirements and the vehicle fuel type:

(1) Gaseous exhaust THC, NMHC, NMOG, CO, NO_X, CO_2, N_2O, CH_4, CH_3OH, C_2H_5OH, C_2H_4O, and HCHO.

(2) Particulates.

(3) Evaporative HC (for gasoline-fueled, methanol-fueled and gaseous-fueled vehicles) and CH_3OH (for methanol-fueled vehicles). The evaporative testing portion of the procedure occurs after the exhaust emission test; however, exhaust emissions need not be sampled to complete a test for evaporative emissions.

(4) Fuel spitback (this test is not required for gaseous-fueled vehicles).

(b) The FTP Otto-cycle exhaust emission test is designed to determine gaseous THC, NMHC, NMOG, CO, CO_2, CH_4, NO_X, N_2O, and particulate mass emissions from gasoline-fueled, methanol-fueled and gaseous-fueled Otto-cycle vehicles as well as methanol and formaldehyde from methanol-fueled Otto-cycle vehicles, as well as methanol, ethanol, acetaldehyde, and formaldehyde from ethanol-fueled vehicles, while simulating an average trip in an urban area of approximately 11 miles (approximately 18 kilometers). The test consists of engine start-ups and vehicle operation on a chassis dynamometer through a specified driving schedule (see paragraph (a) of appendix I to this part for the Urban Dynamometer Driving Schedule). A proportional part of the diluted exhaust is collected continuously for subsequent analysis, using a constant volume (variable dilution) sampler or critical flow venturi sampler.

(c) The diesel-cycle exhaust emission test is designed to determine particulate and gaseous mass emissions during the test described in paragraph (b) of this section. For petroleum-fueled diesel-cycle vehicles, diluted exhaust is continuously analyzed for THC using a heated sample line and analyzer; the other gaseous emissions (CH_4, CO, CO_2, N_2O, and NO_X) are collected continuously for analysis as in paragraph (b) of this section. For methanol- and ethanol-fueled vehicles, THC, methanol, formaldehyde, CO, CO_2, CH_4, N_2O, and NO_X are collected continuously for analysis as in paragraph (b) of this section. Additionally, for ethanol-fueled vehicles, ethanol and acetaldehyde are collected continuously for analysis as in paragraph (b) of this section. THC, methanol, ethanol, acetaldehyde, and formaldehyde are collected using heated sample lines, and a heated FID is used for THC analyses. Simultaneous with the gaseous exhaust collection and analysis, particulates from a proportional part of the diluted exhaust are collected continuously on a filter. The mass of particulate is determined by the procedure described in § 86.139. This testing requires a dilution tunnel as well as the constant volume sampler.

(d) The evaporative emission test (gasoline-fueled vehicles, methanol-fueled and gaseous-fueled vehicles) is designed to determine hydrocarbon and methanol evaporative emissions as a consequence of diurnal temperature fluctuation, urban driving and hot soaks following drives. It is associated with a series of events that a vehicle may experience and that may result in hydrocarbon and/or methanol vapor losses. The test procedure is designed to measure:

(1) Diurnal emissions resulting from daily temperature changes (as well as relatively constant resting losses), measured by the enclosure technique (see § 86.133–96);

(2) Running losses resulting from a simulated trip performed on a chassis dynamometer, measured by the enclosure or point-source technique (see § 86.134–96; this test is not required for gaseous-fueled vehicles); and

(3) Hot soak emissions, which result when the vehicle is parked and the hot engine is turned off, measured by the enclosure technique (see § 86.138–96).

(e) Fuel spitback emissions occur when a vehicle's fuel fill neck cannot

accommodate dispensing rates. The vehicle test for spitback consists of a short drive followed immediately by a complete refueling event. This test is not required for gaseous-fueled vehicles.

(f) The element of the SFTP for exhaust emissions related to aggressive driving (US06) is designed to determine gaseous THC, NMHC, CO, CO_2, CH_4, and NO_X emissions from gasoline-fueled or diesel-fueled vehicles (see § 86.158–08 Supplemental test procedures; overview, and § 86.159–08 Exhaust emission test procedures for US06 emissions). The test cycle simulates urban driving speeds and accelerations that are not represented by the FTP Urban Dynamometer Driving Schedule simulated trips discussed in paragraph (b) of this section. The test consists of vehicle operation on a chassis dynamometer through a specified driving cycle (see paragraph (g), US06 Dynamometer Driving Schedule, of appendix I to this part). A proportional part of the diluted exhaust is collected continuously for subsequent analysis, using a constant volume (variable dilution) sampler or critical flow venturi sampler.

(g)(1) The element of the SFTP related to the increased exhaust emissions caused by air conditioning operation (SC03) is designed to determine gaseous THC, NMHC, CO, CO_2, CH_4, and NO_X emissions from gasoline-fueled or diesel fueled vehicles related to air conditioning use (see § 86.158–08 Supplemental Federal test procedures; overview and § 86.160–00 Exhaust emission test procedure for SC03 emissions). The test cycle simulates urban driving behavior with the air conditioner operating. The test consists of engine startups and vehicle operation on a chassis dynamometer through specified driving cycles (see paragraph (h), SC03 Dynamometer Driving Schedule, of appendix I to this part). A proportional part of the diluted exhaust is collected continuously for subsequent analysis, using a constant volume (variable dilution) sampler or critical flow venturi sampler. The testing sequence includes an approved preconditioning cycle, a 10 minute soak with the engine turned off, and the SC03 cycle with measured exhaust emissions.

(2) The SC03 air conditioning test is conducted with the air conditioner operating at specified settings and the ambient test conditions of:

(i) Air temperature of 95 °F;

(ii) 100 grains of water/pound of dry air (approximately 40 percent relative humidity);

(iii) Simulated solar heat intensity of 850 W/m² (see § 86.161–00(d)); and

(iv) Air flow directed at the vehicle that will provide representative air conditioner system condenser cooling at all vehicle speeds (see § 86.161–00(e)).

(3) Manufacturers have the option of simulating air conditioning operation during testing at other ambient test conditions provided they can demonstrate that the vehicle tail pipe exhaust emissions are representative of the emissions that would result from the SC03 cycle test procedure and the ambient conditions of paragraph (g)(2) of this section. The simulation test procedure must be approved in advance by the Administrator (see §§ 86.162–03 and 86.163–00).

(h) Except in cases of component malfunction or failure, all emission control systems installed on or incorporated in a new motor vehicle shall be functioning during all procedures in this subpart. Maintenance to correct component malfunction or failure shall be authorized in accordance with § 86.007–25 or § 86.1834–01 as applicable.

(i) Background concentrations are measured for all species for which emissions measurements are made. For exhaust testing, this requires sampling and analysis of the dilution air. For evaporative testing, this requires measuring initial concentrations. (When testing methanol-fueled vehicles, manufacturers may choose not to measure background concentrations of methanol and/or formaldehyde, and then assume that the concentrations are zero during calculations.)

[75 FR 25678, May 7, 2010]

§ 86.128–79 Transmissions.

(a) All test conditions, except as noted, shall be run according to the manufacturer's recommendations to the ultimate purchaser, *Provided*, That:

Such recommendations are representative of what may reasonably be expected to be followed by the ultimate purchaser under in-use conditions.

(b) Vehicles equipped with free wheeling or overdrive, except as noted, shall be tested with these features operated according to the manufacturer's recommendations to the ultimate purchaser.

(c) Idle modes less than one minute in length shall be run with automatic transmissions in ''Drive'' and the wheels braked; manual transmissions shall be in gear with the clutch disengaged, except for the first idle mode (see §§ 86.134, 86.136, and 86.137). The first idle mode and idle modes longer than one minute in length may be run with automatic transmissions in ''Neutral;'' manual transmissions may be in ''Neutral'' with the clutch engaged (clutch may be disengaged for engine start-up). If an automatic transmission is in ''Neutral'' during an idle mode, it shall be placed in ''Drive'' with the wheels braked at least 5 seconds before the end of the idle mode. If a manual transmission is in ''Neutral'' during an idle mode, it shall be placed in gear with the clutch disengaged at least 5 seconds before the end of the idle mode.

(d) The vehicle shall be driven with appropriate accelerator pedal movement necessary to achieve the speed versus time relationship prescribed by the driving schedule. Both smoothing of speed variations and excessive accelerator pedal perturbations are to be avoided.

(e) Accelerations shall be driven smoothly following representative shift speeds and procedures. For manual transmissions, the operator shall release the accelerator pedal during each shift and accomplish the shift with minimum time. If the vehicle cannot accelerate at the specified rate, the vehicle shall be operated at maximum available power until the vehicle speed reaches the value prescribed for that time in the driving schedule.

(f) The deceleration modes shall be run in gear using brakes or accelerator pedal as necessary to maintain the desired speed. Manual transmission vehicles shall have the clutch engaged and shall not change gears from the previous mode. For those modes which decelerate to zero, manual transmission clutches shall be depressed when the speed drops below 15 mph (24.1 km/h), when engine roughness is evident, or when engine stalling is imminent.

(g)(1) In the case of test vehicles equipped with manual transmissions, the transmission shall be shifted in accordance with procedures which are representative of shift patterns that may reasonably be expected to be followed by vehicles in use, in terms of such variables as vehicle speed or percent rated engine speed. At the Administrator's discretion, a test vehicle may also be shifted according to the shift procedures recommended by the manufacturer to the ultimate purchaser, if such procedures differ from those which are reasonably expected to be followed by vehicles in use.

(2) A manufacturer may recommend to the ultimate purchaser shift procedures other than those used in testing by the EPA, Provided that: All shift procedures (including multiple shift speeds) which the manufacturer proposes to supply to the ultimate purchaser are provided to the Administrator as part of the manufacturer's application for certification, or as an amendment to such application, under § 86.079–32, § 86.079–33, § 86.082–34, or § 86.1844–01 as applicable.

(h) Downshifting is allowed at the beginning of or during a power mode in accordance with the shift procedure determined in paragraph (g)(1) of this section.

[43 FR 52921, Nov. 14, 1978, as amended at 58 FR 16033, Mar. 24, 1993; 64 FR 23921, May 4, 1999; 79 FR 23696, Apr. 28, 2014]

§ 86.129–00 Road load power, test weight, and inertia weight class determination.

Applicability. Section 86.129–94 (a) applies to all vehicle testing. Section 86.129–80 (b) and (c) are applicable to vehicles from engine families which are not required to meet SFTP requirements, although a manufacturer may elect to use the requirements in paragraphs (e) and (f) of this section instead of § 86.129–80 (b) and (c) on any vehicle. Section 86.129–94(d) which discusses fuel temperature profile, is applicable to evaporative emission running loss

testing. Paragraphs (e) and (f) of this section are applicable to vehicles from engine families required to comply with SFTP requirements. Section 86.129–00 includes text that specifies requirements that differ from § 86.129–80 or § 86.129–94. Where a paragraph in § 86.129–80 or § 86.129–94 is identical and applicable to § 86.129–00, this may be indicated by specifying the corresponding paragraph and the statement ''[Reserved]. For guidance see § 86.129–80.'' or ''[Reserved]. For guidance see § 86.129–94.''

(a) [Reserved]. For guidance see § 86.129–94.

(b)–(c) [Reserved]. For guidance see § 86.129–80.

(d) [Reserved]. For guidance see § 86.129–94.

(e)(1) For each test vehicle from an engine family required to comply with SFTP requirements, the manufacturer shall supply representative road load forces for the vehicle at speeds between 15 km/hr (9.3 mph) and 115 km/hr (71.5 mph). The road load force shall represent vehicle operation on a smooth level road, during calm winds, with no precipitation, at an ambient temperature of 20 °C (68 °F), and atmospheric pressure of 98.21 kPa. Road load force for low speed may be extrapolated. Manufacturers may, at their option, use road load forces meeting the objectives of paragraph (f) of this section for any vehicle.

(2) The dynamometer's power absorption shall be set for each vehicle's emission test sequence such that the force imposed during dynamometer operation matches actual road load force at all speeds.

(3) The 10 percent adjustment in road load power for air conditioning discussed in § 86.129–80(b)(3), is not applicable when road load forces are determined for dynamometer testing using paragraphs (e)(1) and (e)(2) of this section.

(f)(1) Required test dynamometer inertia weight class selections for the test elements of FTP, US06, and SC03 are determined by the test vehicles test weight basis and corresponding equivalent weight as listed in the tabular information of § 86.129–94(a). With the exception of the fuel economy test weight information in footnote 4 to the table in § 86.129–94(a), none of the other footnotes to the tabular listing apply to emission tests utilizing an approved single roll dynamometer or equivalent dynamometer configuration. All light-duty vehicles and light light-duty trucks are to be tested at the inertia weight class corresponding to their equivalent test weight.

(i) For light-duty vehicles and light light-duty trucks, test weight basis is loaded vehicle weight, which is the vehicle weight plus 300 pounds.

(ii) For heavy light-duty trucks, the definition of test weight basis varies depending on the SFTP test element being tested.

(A) For the aggressive driving cycle (US06), the test weight basis is the vehicle curb weight plus 300 pounds.

(B) For the FTP and the air conditioning (SC03) element of the SFTP, the test weight is the average of the curb weight plus GVWR.

(C) Regardless of other requirements in this section relating to the testing of HLDTs, for Tier 2 HLDTs, the test weight basis for FTP and SFTP testing (both US06 and SC03), if applicable, is the vehicle curb weight plus 300 pounds. For MDPVs certified to standards in bin 11 in Tables S04–1 and 2 in § 86.1811–04, the test weight basis must be adjusted loaded vehicle weight (ALVW) as defined in this part.

(2) Dynamic inertia load adjustments may be made to the test inertia weight during specific US06 acceleration events when wide open throttle operation is equal to or greater than eight (8) seconds (see § 86.108–00). The dynamic inertia weight adjustment procedure must be approved in advance of conducting official US06 testing. The Administrator will perform confirmatory US06 testing using the same dynamometer inertia adjustment procedures as the manufacturer if:

(i) The manufacturer submits a request to the Administrator; and

(ii) The manufacturer provides the dynamometer hardware and/or software necessary for these adjustments to the Administrator.

[61 FR 54892, Oct. 22, 1996, as amended at 65 FR 6850, Feb. 10, 2000]

EDITORIAL NOTE: At 64 FR 23921, May 4, 1999, § 86.129–00 was amended by revising footnote 4 to the table in paragraph (a) and by

revising paragraph (d)(1)(iv). Since both paragraphs (a) and (d) of § 86.129–00 were reserved and contained no text, these amendments could not be made.

§ 86.129–80 Road load power, test weight, and inertia weight class determination.

(a) [Reserved]

(b) *Power absorption unit adjustment—light-duty trucks.* (1) The power absorption unit shall be adjusted to reproduce road load power at 50 mph true speed. The indicated road load power setting shall take into account the dynamometer friction. The relationship between road load (absorbed) power and indicated road load power for a particular dynamometer shall be determined by the procedure outlined in § 86.118 or other suitable means.

(2) The road load power listed in the table above shall be used or the vehicle manufacturer may determine the road load power by an alternate procedure requested by the manufacturer and approved in advance by the Administrator.

(3) Where it is expected that more than 33 percent of a car line within an engine-system combination will be equipped with air conditioning per § 86.080–24(g)(2), the road load power listed above or as determined in paragraph (b)(2) of this section shall be increased by 10 percent, up to a maximum increase of 1.4 horsepower, for testing all test vehicies representing that car line within that engine-system combination if those vehicles are intended to be offered with air conditioning in production. The above increase for air conditioning shall be added prior to rounding off as instructed by notes 2 and 3 of the table.

(c) *Power absorption unit adjustment—light-duty vehicles.* (1) The power absorption unit shall be adjusted to reproduce road load power at 50 mph true speed. The dynamometer power absorption shall take into account the dynamometer friction, as discussed in § 86.118.

(2) The dynamometer road load setting is determined from the equivalent test weight, the reference frontal area, the body shape, the vehicle protuberances, and the tire type by the following equations.

(i) For light-duty vehicles to be tested on a twin roll dynamometer.

$$Hp = aA + P + tW$$

where:

Hp = the dynamometer power absorber setting at 50 mph (horsepower).

A = the vehicle reference frontal area (ft^2). The vehicle reference frontal area is defined as the area of the orthogonal projection of the vehicle; including tires and suspension components, but excluding vehicle protuberances, onto a plane perpendicular to both the longitudinal plane of the vehicle and the surface upon which the vehicle is positioned. Measurements of this area shall be computed to the nearest tenth of a square foot using a method approved in advance by the Administrator.

P = the protuberance power correction factor from table 1 of this paragraph (horsepower).

W = vehicle equivalent test weight (lbs) from the table in paragraph (a).

a = 0.43 for fastback-shaped vehicles; = 0.50 for all other light duty vehicles.

t = 0.0 for vehicles equipped with radial ply tires; = 3×10^{-4} for all other vehicles.

A vehicle is considered to have a fastback shape if the rearward projection of that portion of the rear surface (A_b) which slopes at an angle of less than 20 degrees from the horizontal is at least 25 percent as large as the vehicle reference frontal area. In addition, this surface must be smooth, continuous, and free from any local transitions greater than four degrees. An example of a fastback shape is presented in Figure 1.

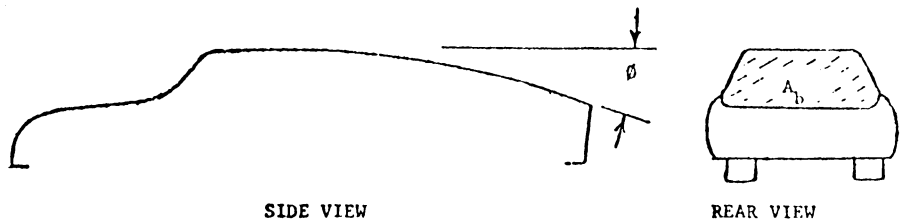

Figure 1

TABLE I—PROTUBERANCE POWER, P. VERSUS TOTAL PROTUBERANCE FRONTAL AREA, A_p

A_p (square foot)	P (horsepower)
A_p<0.30	0.0
0.30 A_p<0.60	.40
0.60 A_p<0.90	.70
0.90 A_p<1.20	1.00
1.20 A_p<1.50	1.30
1.50 A_p<1.80	1.60
1.80 A_p<2.10	1.90
2.10 A_p<2.40	2.20
2.40 A_p<2.70	2.50
2.70 A_p<3.00	2.80
3.00 A_p	3.10

The protuberance frontal area, A_p, is defined in a manner analogous to the definition of the vehicle reference frontal area, i.e., the total area of the orthogonal projections of the vehicle mirrors, hood ornaments, roof racks, and other protuberance onto a plane(s) perpendicular to both the longitudinal plane of the vehicle and the surface upon which the vehicle is positioned. A protuberance is defined as any fixture attached to the vehicle protruding more than 1 inch from the vehicle surface and having a projected area greater than 0.01 ft^2 with the area calculated by a method approved in advance by the Administrator. Included in the total protuberance frontal area shall be all fixtures which occur as standard equipment. The area of any optional equipment shall also be included if it is expected that more than 33 percent of the car line sold will be equipped with this option.

(ii) The dynamometer power absorber setting for light-duty vehicles shall be rounded to the nearest 0.1 horsepower.

(iii) For light-duty vehicles to be tested on a single, large roll dynamometer.

$$Hp = aA + P + (5.0 \times 10^{-4} + 0.33t)W$$

All symbols in the above equation are defined in paragraph (c)(2)(i) of this section. The rounding criteria of paragraph (c)(2)(i) also apply to this paragraph.

(3) The road load power calculated above shall be used or the vehicle manufacturer may determine the road load power by an alternate procedure requested by the manufacturer and approved in advance by the Administrator.

(4) Where it is expected that more than 33 percent of a car line within an engine-system combination will be equipped with air conditioning, per § 86.080–24(g)(2), the road load power as determined in paragraph (c) (2) or (3) of this section shall be increased by 10 percent up to a maximum increment of 1.4 horsepower, for testing all test vehicles of that car line within that engine-system combination if those vehicles are intended to be offered with air conditioning in production. This power increment shall be added to the indicated dynamometer power absorption setting prior to rounding off this value.

[42 FR 45653, Sept. 12, 1977, as amended at 43 FR 52921, Nov. 14, 1978; 79 FR 23696, Apr. 28, 2014]

§ 86.129–94 Road load power, test weight, inertia weight class determination, and fuel temperature profile.

Section 86.129–94 includes text that specifies requirements that differ from § 86.129–80. Where a paragraph in § 86.129–80 is identical and applicable to § 86.129–94, this may be indicated by specifying the corresponding paragraph and the statement ''[Reserved]. For guidance see § 86.129–80.'' Where a corresponding paragraph of § 86.129–80 is not applicable, this is indicated by the statement ''[Reserved].''

(a) Flywheels, electrical, or other means of simulating test weight as shown in the following table shall be used. If the equivalent test weight

specified is not available on the dynamometer being used, the next higher equivalent test weight (not to exceed 250 pounds) available shall be used:

Road load power at 50 mi/hour—light duty trucks [1] [2] [3]	Test weight basis [4] [5]	Test equivalent test weight (pounds)	Inertia weight class (pounds)
.....	Up to 1062	1,000	1,000
.....	1063 to 1187	1,125	1,000
.....	1188 to 1312	1,250	1,250
.....	1313 to 1437	1,375	1,250
.....	1438 to 1562	1,500	1,500
.....	1563 to 1687	1,625	1,500
.....	1688 to 1812	1,750	1,750
.....	1813 to 1937	1,875	1,750
.....	1938 to 2062	2,000	2,000
.....	2063 to 2187	2,125	2,000
.....	2188 to 2312	2,250	2,250
.....	2313 to 2437	2,375	2,250
.....	2438 to 2562	2,500	2,500
.....	2563 to 2687	2,625	2,500
.....	2688 to 2812	2,750	2,750
.....	2813 to 2937	2,875	2,750
.....	2938 to 3062	3,000	3,000
.....	3063 to 3187	3,125	3,000
.....	3188 to 3312	3,250	3,000
.....	3313 to 3437	3,375	3,500
.....	3438 to 3562	3,500	3,500
.....	3563 to 3687	3,625	3,500
.....	3688 to 3812	3,750	3,500
.....	3813 to 3937	3,875	4,000
.....	3938 to 4125	4,000	4,000
.....	4126 to 4375	4,250	4,000
.....	4376 to 4625	4,500	4,500
.....	4626 to 4875	4,750	4,500
.....	4876 to 5125	5,000	5,000
.....	5126 to 5375	5,250	5,000
.....	5376 to 5750	5,500	5,500
.....	5751 to 6250	6,000	6,000
.....	6251 to 6750	6,500	6,500
.....	6751 to 7250	7,000	7,000
.....	7251 to 7750	7,500	7,500
.....	7751 to 8250	8,000	8,000
.....	8251 to 8750	8,500	8,500
.....	8751 to 9250	9,000	9,000
.....	9251 to 9750	9,500	9,500
.....	9751 to 10250	10,000	10,000
.....	10251 to 10750 ...	10,500	10,500
.....	10751 to 11250 ...	11,000	11,000
.....	11251 to 11750 ...	11,500	11,500
.....	11751 to 12250 ...	12,000	12,000
.....	12251 to 12750 ...	12,500	12,500
.....	12751 to 13250 ...	13,000	13,000
.....	13251 to 13750 ...	13,500	13,500
.....	13751 to 14000 ...	14,000	14,000

[1] For all light-duty trucks except vans, and for heavy-duty vehicles optionally certified as light-duty trucks, and for complete heavy-duty vehicles, the road load power (horsepower) at 50 mi/h shall be 0.58 times B (defined in footnote 3 of this table) rounded to the nearest ½ horsepower.

[2] For vans, the road load power at 50 mi/h (horsepower) shall be 0.50 times B (defined in footnote 3 of this table) rounded to the nearest ½ horsepower.

[3] B is the basic vehicle frontal area (square foot) plus the additional frontal area (square foot) of mirrors and optional equipment exceeding 0.1 ft^2 which are anticipated to be sold on more than 33 percent of the car line. Frontal area measurements shall be computed to the nearest 10th of a square foot using a method approved in advance by the Administrator.

[4] For model year 1994 and later heavy light-duty trucks not subject to the Tier 0 standards of § 86.094–9, test weight basis is as follows: for emissions tests, the basis shall be adjusted loaded vehicle weight, as defined in § 86.094–2; and for fuel economy tests, the basis shall be loaded vehicle weight, as defined in § 86.082–2, or, at the manufacturer's option, adjusted loaded vehicle weight as defined in § 86.094–2. For all other vehicles, test weight basis shall be loaded vehicle weight, as defined in § 86.082–2.

[5] Light-duty vehicles over 5,750 lb. loaded vehicle weight shall be tested at a 5,500 lb. equivalent test weight.

(b)–(c) [Reserved]. For guidance see § 86.129–80.

(d) *Fuel temperature profile*—(1) *General requirements*. (i) To be tested for running losses, as specified in § 86.134, a vehicle must have a fuel temperature profile. The following procedure is used to generate the fuel temperature profile, which serves as a target for controlling fuel temperatures during the running loss test. This profile represents the fuel temperature change that occurs during on-road driving. If a vehicle has more than one fuel tank, a profile shall be established for each tank. Manufacturers may also simultaneously generate a profile for vapor temperatures.

(ii) If a manufacturer uses a vehicle model to develop a profile to represent multiple models, the vehicle model selected must have the greatest expected fuel temperature increase during driving of all those models it represents. Also, manufacturers must select test vehicles with any available vehicle options that increase fuel temperatures during driving (for example, any feature that limits underbody airflow).

(iii) Manufacturers may conduct testing to develop fuel temperature profiles in a laboratory setting, subject to approval by the Administrator. The laboratory facility should simulate outdoor testing to reproduce fuel and vapor temperature behavior over the specified driving schedule. The design of the laboratory facility should include consideration of any parameters that may affect fuel temperatures, such as solar loading, pavement heat, and relative wind velocities around and underneath the test vehicle. Indoor testing to develop the fuel temperature profiles must be conducted with little or no vehicle-specific adjustment of laboratory parameters. Manufacturers would need to maintain an ongoing demonstration of correlation between laboratory and outdoor measurement of fuel temperatures. Specifically, fuel

temperatures and pressures from indoor driving should be at least as high as measured when driving outdoors according to the procedures described in this section.

(iv) Small-volume manufacturers, as defined in § 86.094–14(b)(1), may use an alternate method for generating fuel temperature profiles, subject to the approval of the Administrator.

(v) The Administrator may conduct testing to establish any vehicle's temperature profiles or to verify compliance with fuel tank pressure requirements.

(2) *Vehicle instrumentation.* (i) The vehicle must be equipped with temperature sensors and pressure transducers, as described in § 86.107–96 (e) and (f), and a driver's aid, which shall be configured to provide the test driver with the desired vehicle speed vs. time trace and the actual vehicle speed.

(ii) A computer, data logger, or strip chart data recorder shall record the following parameters at a minimum during the test run:

(A) Desired speed;

(B) Actual speed;

(C) Instantaneous average liquid fuel temperature (T_{liq}); and

(D) Vapor space pressure (the Administrator may omit measurement of fuel tank pressure).

(iii) The data recording system described in paragraph (d)(2)(ii) of this section shall be capable of resolving time to ±1 s, capable of resolving temperature to ±2 °F, capable of resolving pressure to ±1.0 inch of water, and capable of resolving speed to ±1 mph. The temperature and pressure signals shall be recorded at intervals of up to 1 minute; speed signals shall be recorded at intervals of up to 1 second.

(3) *Ambient conditions.* The procedure shall be run under the following ambient conditions. Conditions should be representative of sunny summer days.

(i) Starting ambient temperature ($T_{amb,\ o}$) shall be at least 95 °F, steady or increasing (no more than 2 °F drop) during the procedure. Ambient temperature shall be measured and recorded in regular intervals of at least once every 5 minutes. Measure ambient temperature with the following requirements (based on *Federal Standard for Siting Meteorological Sensors at Airports*, FCM-S4–1987). The sensors shall be mounted 5 ±1 feet (1.5 ±0.3 meters) above ground level. The sensors shall be protected from radiation from the sun, sky, earth, and any other surrounding objects, but at the same time be adequately ventilated. The sensors shall be installed in such a position as to ensure that measurements are representative of the free air circulation in the locality and not influenced by artificial conditions such as large buildings, cooling towers, and expanses of concrete and tarmac. Keep any grass and vegetation within 100 feet (30 meters) of the sensor clipped to a height of about 10 inches (25 centimeters) or less.

(ii) Wind conditions shall be calm to light with maximum wind speed of 15 mph. In the case of temporary gusting, wind speeds between 15 and 25 mph may occur for up to 5 percent of the total driving time without invalidating the data collection. Wind speed shall be measured and recorded in regular intervals of at least once per minute. Measure wind speed with the following requirements (based on *Federal Standard for Siting Meteorological Sensors at Airports*, FCM-S4–1987). The site should be relatively level, but small gradual slopes are acceptable. The sensor shall be mounted 30 to 33 feet (9 to 10 meters) above the average ground height within a radius of 500 feet (150 meters). The sensor height shall not exceed 33 feet, except as necessary to be at least 15 feet (5 meters) above the height of any obstruction (e.g. vegetation, buildings, etc.) within a 500 foot (150 meter) radius. An object is considered to be an obstruction if the included lateral angle from the sensor to the ends of the object is 10 degrees or more.

(iii) Road surface temperature shall be at least 125 °F throughout the driving period. Pavement temperature shall be measured and recorded in regular intervals of at least once per minute. The track temperature may be measured with an embedded sensor, a portable temperature probe, or an infrared pyrometer that can provide an accuracy of ±2 °F. Temperatures must be measured on a surface representative of the surface where the vehicle is driven.

(iv) Conditions shall be sunny or mostly sunny with a maximum cloud cover of 25 percent.

(v) Reported cloud cover, wind speed, and ambient temperature should be consistent with that reported by the nearest weather station; the Administrator may request justification of any discrepancy.

(4) *Profile determination procedure.* (i) Drain the fuel tank(s) and fill with test fuel to the ''tank fuel volume'' defined in §86.082–2. The test fuel should meet the specifications of §86.113, except that fuel with a lower volatility may be used, subject to Administrator approval. Manufacturers using a lower volatility fuel must generate a vapor temperature profile for demonstrating compliance with the limit on fuel tank pressure during the running loss test (see §86.134–96).

(ii) The vehicle shall be moved to the location where the data is to be collected. It may be driven a maximum distance of 5 miles and may also be transported by other means. The vehicle shall be stabilized by one of the following methods:

(A) The vehicle shall be parked for a minimum of 12 hours in an open area on a surface that is representative of the test road, without any artificial heating or cooling of the fuel. The orientation of the front of the vehicle during parking (e.g., N, SW, etc.) shall be documented.

(B) The vehicle may be soaked in a temperature-controlled environment to stabilize fuel temperatures. Before starting the drive, the vehicle shall be stabilized with fuel temperatures 95 ±3 °F for at least one hour. The fuel temperature may not exceed 98 °F at any time before the beginning of the driving schedule, during which only whole-vehicle heating and cooling may be used to control fuel temperatures. If a manufacturer uses the provisions of paragraph (d)(7)(v) of this section to establish a lower initial fuel temperature for the running loss test, the fuel in the test vehicle may not be stabilized at a temperature higher than the newly established initial fuel temperature.

(iii) Once the ambient conditions specified in paragraph (d)(3) of this section are met and the vehicle has been stabilized according to paragraph (d)(4)(ii) of this section, the vehicle's engine may be started. The vehicle's air conditioning system (if so equipped) shall be set to the ''normal'' air conditioning mode and adjusted to the minimum discharge air temperature and high fan speed. Vehicles equipped with automatic temperature controlled air conditioning systems shall be set to operate in ''automatic'' temperature and fan modes with the system set at 72 °F.

(iv) The vehicle may be operated at minimum throttle for a period up to 60 seconds prior to the start of the driving schedule, as necessary to move from the parking location onto the road surface. The driver's aid shall be started and the vehicle operated over the driving cycle specified in §86.134–96(b) with the transmission operated in the same manner as specified in §86.128–79. The data recording system shall provide a record of the required parameters over the entire period of driving.

(5) *Records required.* In addition to the vehicle data recording, the following parameters shall be documented for the determination of the fuel temperature profile:

(i) Date and time of vehicle fueling;

(ii) Odometer reading at vehicle fueling;

(iii) Date and time vehicle was parked, parking location and orientation;

(iv) Odometer reading at parking;

(v) Date and time engine was started;

(vi) Time of initiation of first UDDS;

(vii) Time of completion of the driving cycle;

(viii) Ambient temperatures throughout the period of driving (T_{amb});

(ix) Wind speed throughout the period of driving;

(x) Track surface temperatures throughout the period of driving cycle (T_{sur});

(xi) Percent cloud cover during the period of driving; and

(xii) Ambient temperature, wind speed, and percent cloud cover reported by the nearest weather station for the time corresponding most closely to the period of driving.

(6) *Fuel tank pressure.* Tank pressure shall not exceed 10 inches of water at any time during the temperature profile determination unless a pressurized

system is used and the manufacturer demonstrates that vapor would not be vented to the atmosphere upon fuel cap removal.

(7) *Calculation of temperature profiles.* (i) The traces from the driving schedule shall be verified to meet the speed tolerance requirements of § 86.115. The following conditions shall be verified:

(A) $T_{amb,\ i} \geq T_{amb,\ o} - 2$ °F.

Where,

(*1*)i = instantaneous measurement throughout the drive; and

(*2*)o = initial measurement at the start of the specified driving schedule.

(B) $T_{amb,\ o} \geq 95$ °F.

(C) $T_{sur,\ i} - T_{amb,\ i} \geq 30$ °F.

(D) $W_{max} \leq 15$ mph.

(ii) Failure to comply with any of these requirements shall result in invalidation of the data and require that the procedure be repeated, beginning with the fuel drain at paragraph (d)(4)(i) of this section.

(iii) If all these requirements are met, the following calculations shall be performed to determine a profile for liquid fuel temperatures and, if applicable, for vapor temperatures:

$T_{i,\ profile} = T_i - T_o$.

Where:

(A) $Ti_{,profile}$ = the series of temperatures that comprise the relative temperature profile.

(B) T_i = the series of observed liquid fuel or vapor temperatures during the drive.

(C) T_o = the liquid fuel or vapor temperature observed at the start of the specified driving schedule.

(iv) The relative temperature profile consists of the set of temperatures at each 1-minute interval. If temperatures are sampled more frequently than once per minute, the temperature data points may represent a rolling average of temperatures sampled for up to one-minute intervals. If multiple valid test runs are conducted for any model, then all the collected data shall be used to calculate a composite profile, based on the average temperatures at each point. The absolute temperature profile is determined by adding 95 °F (35 °C) to each point of the relative profile. Other methodologies for developing corrected liquid fuel and vapor space temperature profiles may be used if demonstrated to yield equivalent results and approved in advance by the Administrator.

(v) Manufacturers may use a lower initial fuel temperature for the running loss test, if approved in advance by the Administrator. To demonstrate the need for such an adjustment, manufacturers would be expected to determine the maximum fuel temperature experienced by a vehicle during an extended park or after driving one UDDS cycle when exposed to the ambient conditions described in paragraph (d)(3) of this section. To use this provision, manufacturers would have to show maximum fuel temperatures no greater than 92 °F.

[56 FR 25775, June 5, 1991, as amended at 58 FR 16033, Mar. 24, 1993; 59 FR 39649, Aug. 3, 1994; 60 FR 43891, Aug. 23, 1995; 65 FR 59956, Oct. 6, 2000]

§ 86.130–96 Test sequence; general requirements.

Paragraphs (a) through (d) of this section are applicable to vehicles tested for the FTP test. Paragraph (e) of this section is applicable to vehicles tested for the SFTP supplemental tests of air conditioning (SC03) and aggressive driving (US06). Paragraph (f) of this section is applicable to all emission testing.

(a)(1) *Gasoline- and methanol-fueled vehicles.* The test sequence shown in figure B96–10 shows the steps encountered as the test vehicle undergoes the procedures subsequently described to determine conformity with the standards set forth. The full three- diurnal sequence depicted in figure B96–10 tests vehicles for all sources of evaporative emissions. The supplemental two-diurnal test sequence is designed to verify that vehicles sufficiently purge their evaporative canisters during the exhaust emission test. Sections 86.132–96, 86.133–96 and 86.138–96 describe the separate specifications of the supplemental two-diurnal test sequence.

(2) *Gaseous-fueled vehicles.* The test sequence shown in figure B96–10 shows the steps encountered as the test vehicle undergoes the procedures subsequently described to determine conformity with the standards set forth, with the exception that the fuel drain and fill and precondition canister steps

are not required for gaseous-fueled vehicles. In addition, the supplemental two-diurnal test and the running loss test are not required.

(b) The vehicle test for fuel spitback during fuel dispensing is conducted as a stand-alone test (see § 86.146). This test is not required for gaseous-fueled vehicles.

(c) Ambient temperature levels encountered by the test vehicle shall be not less than 68 °F nor more than 86 °F, unless otherwise specified. If a different ambient temperature is specified for soaking the vehicle, the soak period may be interrupted once for up to 10 minutes to transport the vehicle from one soak area to another, provided the ambient temperature experienced by the vehicle is never below 68 °F. The temperatures monitored during testing must be representative of those experienced by the test vehicle.

(d) The vehicle shall be approximately level during all phases of the test sequence to prevent abnormal fuel distribution.

(e) The supplemental tests for exhaust emissions related to aggressive driving (US06) and air conditioning (SC03) use are conducted as stand-alone tests as described in §§ 86.158 through 86.160. These tests may be performed in any sequence that maintains the appropriate preconditioning requirements as specified in § 86.132.

(f) If tests are invalidated after collection of emission data from previous test segments, the test may be repeated to collect only those data points needed to complete emission measurements. Compliance with emission standards may be determined by combining emission measurements from different test runs. If any emission measurements are repeated, the new measurements supersede previous values.

[58 FR 16034, Mar. 24, 1993, as amended at 59 FR 48509, Sept. 21, 1994; 60 FR 43893, Aug. 23, 1995; 79 FR 23696, Apr. 28, 2014]

§ 86.131–96 Vehicle preparation.

(a) For gasoline- and methanol-fueled vehicles prepare the fuel tank(s) for recording the temperature of the prescribed test fuel, as described in § 86.107–96(e).

(b) Provide additional fittings and adapters, as required, to accommodate a fuel drain at the lowest point possible in the tank(s) as installed on the vehicle.

(c) For preconditioning that involves loading the evaporative emission canister(s) with butane, provide valving or other means as necessary to allow purging and loading of the canister(s).

(d) For vehicles to be tested for running loss emissions, prepare the fuel tank(s) for measuring and recording the temperature and pressure of the fuel tank as specified in § 86.107–96 (e) and (f). Measurement of vapor temperature is optional during the running loss test. If vapor temperature is not measured, fuel tank pressure need not be measured.

(e) For vehicles to be tested for running loss emissions, prepare the exhaust system by sealing or plugging all detectable sources of exhaust gas leaks. The exhaust system shall be tested or inspected to ensure that detectable exhaust hydrocarbons are not emitted into the running loss enclosure during the running loss test.

(f) For vehicles to be tested for aggressive driving emissions (US06), provide a throttle position sensing signal that is compatible with the test dynamometer. This signal provides the input information that controls dynamometer dynamic inertia weight adjustments (see §§ 86.108–00(b)(2)(ii) and 86.129–00(f)(2)). If a manufacturer chooses not to implement dynamic inertia adjustments for a portion or all of their product line, this requirement is not applicable.

(g) You may disable any AECDs that have been approved solely for emergency vehicle applications under paragraph (4) of the definition of defeat device in § 86.1803. The emission standards do not apply when any of these AECDs are active.

[58 FR 16037, Mar. 24, 1993, as amended at 60 FR 43895, Aug. 23, 1995; 79 FR 23696, Apr. 28, 2014]

§ 86.132–00 Vehicle preconditioning.

Applicability. Section 86.132–96 (a) through (c)(1) and (d) through (m) and paragraph (c)(2) of this section are applicable to FTP and evaporative emission testing. Paragraphs (n) and (o) of

this section are applicable to vehicles tested for the SFTP supplemental tests of aggressive driving (US06) and air conditioning (SC03). Section 86.132–00 includes text that specifies requirements that differ from § 86.132–96. Where a paragraph in § 86.132–96 is identical and applicable to § 86.132–00, this may be indicated by specifying the corresponding paragraph and the statement ''[Reserved]. For guidance see § 86.132–96.''

(a)–(c)(1) [Reserved]. For guidance see § 86.132–96.

(c)(2)(i) Once a test vehicle has completed the refueling and vehicle soak steps specified in § 86.132–96 (b) and (c)(1), these steps may be omitted in subsequent testing with the same vehicle and the same fuel specifications, provided the vehicle remains under laboratory ambient temperature conditions for at least 6 hours before starting the next test. In such cases, each subsequent test shall begin with the preconditioning drive specified in § 86.132–96(c)(1). The test vehicle may not be used to set dynamometer horsepower.

(ii) The SFTP test elements of aggressive driving (US06) and air conditioning (SC03) can be run immediately or up to 72 hours after the official FTP and/or evaporative test sequence without refueling provided the vehicle has remained under laboratory ambient temperature conditions. If the time interval exceeds 72 hours or the vehicle leaves the ambient temperature conditions of the laboratory, the manufacturer must repeat the refueling operation.

(d)–(m) [Reserved]. For guidance see § 86.132–96.

(n) *Aggressive Driving Test (US06) Preconditioning.* (1) If the US06 test follows the exhaust emission FTP or evaporative testing, the refueling step may be deleted and the vehicle may be preconditioned using the fuel remaining in the tank (see paragraph (c)(2)(ii) of this section). The test vehicle may be pushed or driven onto the test dynamometer. Acceptable cycles for preconditioning are as follows:

(i) Preconditioning may consist of a 505, 866, highway, US06 or SC03 test cycles.

(ii) [Reserved]

(iii) If a manufacturer has concerns about fuel effects on adaptive memory systems, a manufacturer may precondition a test vehicle on test fuel and the US06 cycle. Upon request from a manufacturer, the administrator will also perform the preconditioning with the US06 cycle.

(iv) The preconditioning cycles for the US06 test schedule are conducted at the same ambient test conditions as the certification US06 test.

(2) Following the preconditioning specified in paragraphs (n)(1)(i), (ii), and (iii) of this section, the test vehicle is returned to idle for one to two minutes before the start of the official US06 test cycle.

(o) *Air Conditioning Test (SC03) Preconditioning.* (1) If the SC03 test follows the exhaust emission FTP or evaporative testing, the refueling step may be deleted and the vehicle may be preconditioned using the fuel remaining in the tank (see paragraph (c)(2)(ii) of this section). The test vehicle may be pushed or driven onto the test dynamometer. Acceptable cycles for preconditioning are as follows:

(i) If the soak period since the last exhaust test element is less than or equal to two hours, preconditioning may consist of a 505, 866, or SC03 test cycles.

(ii) If the soak period since the last exhaust test element is greater than two hours, preconditioning consists of one full Urban Dynamometer Driving Cycle. Manufacturers, at their option, may elect to use the preconditioning in paragraph (o)(1)(i) of this section when the soak period exceeds two hours.

(2) Following the preconditioning specified in paragraphs (o)(1)(i) and (ii) of this section, the test vehicle is turned off, the vehicle cooling fan(s) is turned off, and the vehicle is allowed to soak for 10 minutes prior to the start of the official SC03 test cycle.

(3) The preconditioning cycles for the SC03 air conditioning test and the 10 minute soak are conducted at the same ambient test conditions as the SC03 certification air conditioning test.

[61 FR 54893, Oct. 22, 1996, as amended at 74 FR 61547, Nov. 25, 2009]

§ 86.132–96 Vehicle preconditioning.

(a) Fuel tank cap(s) of gasoline- and methanol-fueled vehicles shall be removed during any period that the vehicle is parked outdoors awaiting testing, to prevent unusual loading of the canisters. During this time care must be taken to prevent entry of water or other contaminants into the fuel tank. During storage in the test area while awaiting testing, the fuel tank cap(s) may be in place. The vehicle shall be moved into the test area and the following operations performed.

(b)(1) *Gasoline- and Methanol-Fueled Vehicles.* Drain the fuel tank(s) and fill with test fuel, as specified in § 86.113, to the ''tank fuel volume'' defined in § 86.082–2. The fuel cap(s) shall be installed within one minute after refueling.

(2) *Gaseous-Fueled Vehicles.* Vehicle fuel tanks to be filled with fuel that meets the specifications in § 86.113. Fuel tanks shall be filled to a minimum of 75% of service pressure for natural gas-fueled vehicles or a minimum of 75% of available fill volume for liquefied petroleum gas-fueled vehicles. Prior draining of the fuel tanks is not called for if the fuel in the tanks already meets the specifications in § 86.113.

(c)(1) Gasoline- and methanol-fueled vehicles shall be soaked for at least 6 hours after being refueled. Petroleum-fueled diesel vehicles and gaseous-fueled vehicles shall be soaked for at least 1 hour after being refueled. Following this soak period, the test vehicle shall be placed, either by being driven or pushed, on a dynamometer and operated through one Urban Dynamometer Driving Schedule (UDDS), specified in § 86.115 and appendix I of this part.

(2) Once a test vehicle has completed the refueling and vehicle soak steps specified in paragraphs (b) and (c)(1) of this section, these steps may be omitted in subsequent testing with the same vehicle and the same fuel specifications, provided the vehicle remains under laboratory ambient temperature conditions for at least 6 hours before starting the next test. In such cases, each subsequent test shall begin with the preconditioning drive specified in this paragraph. The test vehicle may not be used to set dynamometer horsepower.

(d) For unusual circumstances where the need for additional preconditioning is demonstrated by the manufacturer, such preconditioning may be allowed with the advance approval of the Administrator.

(e) The Administrator may also choose to conduct or require to be conducted additional preconditioning to ensure that the evaporative emission control system is stabilized in the case of gasoline-fueled and methanol-fueled vehicles, or to ensure that the exhaust system is stabilized in the case of petroleum- and methanol-fueled diesel vehicles. The preconditioning shall consist of one of the following:

(1) *For gasoline- and methanol-fueled vehicles.* (i) Additional preconditioning shall consist of no more than 50 miles of mileage accumulation under typical driving conditions, either on the road or on a dynamometer.

(ii) In the case of repeat testing on a flexible-fueled vehicle, in which the test fuel is changed, the following preconditioning procedure shall be used. This additional preconditioning allows the vehicle to adapt to the new fuel before the next test run.

(A) Purge the vehicle's evaporative canister for 60 minutes at 0.8 cfm.

(B) Drain the fuel tank(s) and fill with 3 gallons of the test fuel.

(C) Start the vehicle and allow it to idle for 1 minute.

(D) Drain the fuel tank(s) and fill with the new test fuel to the ''tank fuel volume'' defined in § 86.082–2. The average temperature of the dispensed fuel shall be less than 60 °F.

(E) Conduct a heat build according to the procedure specified in § 86.133–90.

(F) The vehicle shall be placed, either by being driven or pushed, on a dynamometer and operated through one UDDS, specified in § 86.115 and appendix I of this part.

(G) Following the dynamometer drive, the vehicle shall be turned off for 5 minutes, then restarted and allowed to idle for 1 minute. The vehicle shall then be turned off for 1 minute, and allowed to idle again for 1 minute.

(H) After the vehicle is turned off the last time, it may be tested for evaporative and exhaust emissions, starting with paragraph (a) of this section.

(2) *For petroleum-fueled diesel, methanol-fueled diesel, and gaseous-fueled vehicles.* The preconditioning shall consist of either of the following:

(i) An initial one hour minimum soak and, one, two, or three driving cycles of the UDDS, as described in paragraph (c) of this section, each followed by a soak of at least one hour with engine off, engine compartment cover closed and cooling fan off. The vehicle may be driven off the dynamometer following each UDDS for the soak period; or

(ii) For abnormally treated vehicles, as defined in § 86.085–2 or § 86.1803–01 as applicable, two Highway Fuel Economy Driving Schedules, found in 40 CFR part 600, appendix I, run in immediate succession, with the road load power set at twice the value obtained from § 86.129–80.

(f)(1) *Gasoline- and methanol-fueled vehicles.* After completion of the preconditioning drive, the vehicle shall be driven off the dynamometer. The vehicle's fuel tank(s) shall be drained and then filled with test fuel, as specified in § 86.113, to the ''tank fuel volume'' defined in § 86.082–2. The vehicle shall be refueled within 1 hour after completion of the preconditioning drive. The fuel cap(s) shall be installed within 1 minute after refueling. The vehicle shall be parked within five minutes after refueling.

(2) *Petroleum-fueled diesel vehicles.* Within five minutes after completion after the preconditioning drive, the vehicle shall be driven off the dynamometer and parked.

(3) *Gaseous-fueled vehicles.* After completion of the preconditioning drive, the vehicle shall be driven off the dynamometer. Vehicle fuel tanks shall be refilled with fuel that meets the specifications in § 86.113. Fuel tanks shall be filled to a minimum of 75% of service pressure for natural gas-fueled vehicles or a minimum of 75% of available fill volume for liquefied petroleum gas-fueled vehicles. Prior draining of the fuel tanks is not called for if the fuel in the tanks already meets the specifications in § 86.113. The vehicle shall be parked within five minutes after refueling, or, in the absence of refueling, within five minutes after completion of the preconditioning drive.

(g) The vehicle shall be soaked for not less than 12 hours nor more than 36 hours between the end of the refueling event and the beginning of the cold start exhaust emission test.

(h) During the soak period for the three-diurnal test sequence described in § 86.130–96, evaporative canisters, if the vehicle is so equipped, shall be preconditioned according to the following procedure. For vehicles with multiple canisters in a series configuration, the set of canisters must be preconditioned as a unit. For vehicles with multiple canisters in a parallel configuration, each canister must be preconditioned separately. If production evaporative canisters are equipped with a functional service port designed for vapor load or purge steps, the service port shall be used during testing to precondition the canister. In addition, for model year 1998 and later vehicles equipped with refueling canisters, these canisters shall be preconditioned for the three-diurnal test sequence according to the procedure in paragraph (j)(1) of this section. If a vehicle is designed to actively control evaporative or refueling emissions without a canister, the manufacturer shall devise an appropriate preconditioning procedure, subject to the approval of the Administrator.

(1)(i) Prepare the evaporative emission canister for the canister purging and loading operation. The canister shall not be removed from the vehicle, unless access to the canister in its normal location is so restricted that purging and loading can only reasonably be accomplished by removing the canister from the vehicle. Special care shall be taken during this step to avoid damage to the components and the integrity of the fuel system. A replacement canister may be temporarily installed during the soak period while the canister from the test vehicle is preconditioned.

(ii) The canister purge shall be performed with ambient air of humidity controlled to 50±25 grains per pound of dry air. This may be accomplished by purging the canister in a room that is conditioned to this level of absolute humidity. The flow rate of the purge

air shall be maintained at a nominal flow rate of 0.8 cfm and the duration shall be determined to provide a total purge volume flow through the canister equivalent to 300 canister bed volume exchanges. The bed volume is based on the volume of adsorbing material in the canister.

(iii) The evaporative emission canister shall then be loaded by sending to the canister an amount of commercial grade butane vapors equivalent to 1.5 times its nominal working capacity. The canister shall be loaded with a mixture composed of 50 percent butane and 50 percent nitrogen by volume at a rate of 15±2 grams butane per hour. If the canister loading at that rate takes longer than 12 hours, a manufacturer may determine a new rate, based on completing the canister loading in no less than 12 hours. The new rate may be used for all subsequent canister loading according to paragraph (h) of this section. The time of initiation and completion of the canister loading shall be recorded.

(iv) The determination of a canister's nominal working capacity shall be based on the average capacity of no less than five canisters that are in a stabilized condition.

(A) For stabilization, each canister must be loaded no less than 10 times and no more than 100 times to 2-gram breakthrough with a 50/50 mixture by volume of butane and nitrogen, at a rate of 15 grams butane per hour. Each canister loading step must be preceded by canister purging with 300 canister bed volume exchanges at 0.8 cfm.

(B) For determining working capacity, each canister must first be purged with 300 canister bed volume exchanges at 0.8 cfm. The working capacity of each canister shall be established by determining the mass of butane required to load the canister from the purged state so that it emits 2 grams of hydrocarbon vapor; the canister must be loaded with a 50/50 mixture by volume of butane and nitrogen, at a rate of 15 grams butane per hour.

(2) For methanol-fueled and flexible-fueled vehicles, canister preconditioning shall be performed with a fuel vapor composition representative of that which the vehicle would generate with the fuel mixture used for the current test. Manufacturers shall develop a procedure to precondition the evaporative canister, if the vehicle is so equipped, for the different fuel. The procedure shall represent a canister loading equivalent to that specified in paragraph (h)(1) of this section and shall be approved in advance by the Administrator.

(i) [Reserved]

(j) For the supplemental two-diurnal test sequence described in § 86.130–96, one of the following methods shall be used to precondition evaporative canisters during the soak period specified in paragraph (g) of this section. For vehicles with multiple canisters in a series configuration, the set of canisters must be preconditioned as a unit. For vehicles with multiple canisters in a parallel configuration, each canister must be preconditioned separately. In addition, for model year 1998 and later vehicles equipped with refueling canisters, these canisters shall be preconditioned for the supplemental two-diurnal test sequence according to the procedure in paragraph (j)(1) of this section. Canister emissions are measured to determine breakthrough. Breakthrough is here defined as the point at which the cumulative quantity of hydrocarbons emitted is equal to 2 grams.

(1) *Butane loading to breakthrough.* The following procedure provides for emission measurement in an enclosure. Breakthrough may also be determined by measuring the weight gain of an auxiliary evaporative canister connected downstream of the vehicle's canister, in which case, the following references to the enclosure can be ignored. The auxiliary canister shall be well purged prior to loading. If production evaporative canisters are equipped with a functional service port designed for vapor load or purge steps, the service port shall be used during testing to precondition the canister.

(i) Prepare the evaporative/refueling emission canister for the canister loading operation. The canister shall not be removed from the vehicle, unless access to the canister in its normal location is so restricted that purging and loading can only reasonably be accomplished by removing the canister from the vehicle. Special care shall be taken

during this step to avoid damage to the components and the integrity of the fuel system. A replacement canister may be temporarily installed during the soak period while the canister from the test vehicle is preconditioned.

(ii) The evaporative emission enclosure shall be purged for several minutes. Warning: If at any time the concentration of hydrocarbons, of methanol, or of methanol and hydrocarbons exceeds 15,000 ppm C the enclosure should be immediately purged. This concentration provides at least a 4:1 safety factor against the lean flammability limit.

(iii) The FID hydrocarbon analyzer shall be zeroed and spanned immediately prior to the canister loading procedure.

(iv) If not already on, the evaporative enclosure mixing fan shall be turned on at this time.

(v) Place the vehicle in a sealed enclosure and measure emissions with a FID.

(vi)(A) For gasoline-fueled vehicles, load the canister with a mixture composed of 50 percent butane and 50 percent nitrogen by volume at a rate of 40 grams butane per hour.

(B) For methanol-fueled and flexible-fueled vehicles, canister preconditioning shall be performed with a fuel vapor composition representative of that which the vehicle would generate with the fuel mixture used for the current test. Manufacturers shall develop a procedure to precondition the evaporative canister, if the vehicle is so equipped, for the different fuel.

(vii) As soon as the canister reaches breakthrough, the vapor source shall be shut off.

(viii) Reconnect the evaporative/refueling emission canister and restore the vehicle to its normal operating condition.

(2) *Load with repeated diurnal heat builds to breakthrough.* The following procedure provides for emission measurement in an enclosure. Breakthrough may also be determined by measuring the weight gain of an auxiliary evaporative canister connected downstream of the vehicle's canister, in which case, the following references to the enclosure can be ignored. The auxiliary canister shall be well purged with dry air prior to loading.

(i) The evaporative emission enclosure shall be purged for several minutes. WARNING: If at any time the concentration of hydrocarbons, of methanol, or of methanol and hydrocarbons exceeds 15,000 ppm C the enclosure should be immediately purged. This concentration provides at least a 4:1 safety factor against the lean flammability limit.

(ii) The FID hydrocarbon analyzer shall be zeroed and spanned immediately prior to the diurnal heat builds.

(iii) If not already on, the evaporative enclosure mixing fan shall be turned on at this time.

(iv) The fuel tank(s) of the prepared vehicle shall be drained and filled with test fuel, as specified in § 86.113, to the ''tank fuel volume'' defined in § 86.082–2. The average temperature of the dispensed fuel shall be 60±12 °F (16±7 °C). The fuel tank cap(s) shall be installed within 1 minute after refueling.

(v) Within one hour of being refueled, the vehicle shall be placed, with the engine shut off, in the evaporative emission enclosure. The fuel tank temperature sensor shall be connected to the temperature recording system. A heat source, specified in § 86.107–90(a)(4), shall be properly positioned with respect to the fuel tank(s) and connected to the temperature controller.

(vi) The temperature recording system shall be started.

(vii) The fuel may be artificially heated to the starting diurnal temperature.

(viii) When the fuel temperature reaches at least 69 °F (21 °C), immediately: turn off purge blower (if not already off); close and seal enclosure doors; and initiate measurement of the hydrocarbon level in the enclosure.

(ix) When the fuel temperature reaches 72±2 °F (22±1 °C), start the diurnal heat build.

(x) The fuel shall be heated in such a way that its temperature change conforms to the following function to within ±4 °F (±3 °C):

$F = T_o + 0.4t$; or

for SI units,

$C = T_o + (2/9)t$.

Where,

F = fuel temperature, °F;
C = fuel temperature, °C;
t = time since beginning of test, minutes; and
T_o = initial temperature in °F (°C for SI units).

(xi) As soon as breakthrough occurs or when the fuel temperature reaches 96 °F (36 °C), whichever occurs first, the heat source shall be turned off, the enclosure doors shall be unsealed and opened, and the vehicle fuel tank cap(s) shall be removed. If breakthrough has not occurred by the time the fuel temperature reaches 96 °F (36 °C), the heat source shall be removed from the vehicle, the vehicle shall be removed (with engine still off) from the evaporative emission enclosure and the entire procedure outlined in paragraph (j)(2) of this section shall be repeated until breakthrough occurs.

(xii) After breakthrough occurs, the fuel tank(s) of the prepared vehicle shall be drained and filled with test fuel, as specified in § 86.113, to the ''tank fuel volume'' defined in § 86.082–2. The fuel shall be stabilized to a temperature within 3 °F of the lab ambient before beginning the driving cycle for the exhaust emission test.

(k) [Reserved]

(l) Vehicles to be tested for exhaust emissions only shall be processed according to §§ 86.135 through 86.137. Vehicles to be tested for evaporative emissions shall be processed in accordance with the procedures in §§ 86.133 through 86.138, starting with § 86.135.

(m) Vehicles to be tested for evaporative emissions with the supplemental two-diurnal test sequence described in § 86.130–96, shall proceed according to §§ 86.135 through 86.137, followed by the supplemental hot soak test (see § 86.138–96(k)) and the supplemental diurnal emission test (see § 86.133–96(p)).

(n) With prior approval of the Administrator, manufacturers may use an alternative canister loading method in lieu of the applicable canister loading method described in the provisions of paragraphs (h), (j)(1) and (j)(2) of this section, provided the alternative method is shown to be equivalent or result in a more fully loaded canister (a canister that has adsorbed an equal or greater amount of hydrocarbon vapors) than the applicable canister loading method required by the provisions of paragraphs (h), (j)(1) and (j)(2) of this section. Additionally, the Administrator may conduct confirmatory certification testing and in-use testing using the alternative canister loading method used by the manufacturer to test applicable certification and/or in-use vehicles or the appropriate method outlined in the provisions of paragraphs (h), (j)(1) and (j)(2) of this section.

[58 FR 16037, Mar. 24, 1993, as amended at 59 FR 16296, Apr. 6, 1994; 59 FR 48509, Sept. 21, 1994; 60 FR 43895, Aug. 23, 1995; 64 FR 23922, May 4, 1999; 70 FR 72927, Dec. 8, 2005; 79 FR 23696, Apr. 28, 2014]

§ 86.133–96 Diurnal emission test.

(a)(1) The diurnal emission test for gasoline-, methanol- and gaseous-fueled vehicles consists of three 24-hour test cycles following the hot soak test. Emissions are measured for each 24-hour cycle, with the highest emission level used to determine compliance with the standards specified in subpart A of this part. The Administrator may truncate a test after any 24-hour cycle without affecting the validity of the collected data. Sampling of emissions from the running loss and hot soak tests is not required as preparation for the diurnal emission test. The diurnal emission test may be conducted as part of either the three- diurnal test sequence or the supplemental two-diurnal test sequence, as described in § 86.130–96.

(2) For the full three-diurnal test sequence, the diurnal emission test outlined in paragraphs (b) through (o) of this section follows the high-temperature hot soak test concluded in § 86.138–96(j).

(3) For the supplemental two-diurnal test sequence, the diurnal emission test outlined in paragraph (p) of this section follows the alternate hot soak test specified in § 86.138–96(k). This test is not required for gaseous-fueled vehicles.

(b) The test vehicle shall be soaked for not less than 6 hours nor more than 36 hours between the end of the hot soak test and the start of the diurnal emission test. For at least the last 6 hours of this period, the vehicle shall

be soaked at 72°±3 °F. The temperature tolerance may be waived for up to 10 minutes to allow purging of the enclosure or transporting the vehicle into the enclosure at the beginning of the diurnal emission test.

(c) The test vehicle shall be exposed to ambient temperatures cycled according to the profile specified in § 86.133 and appendix II of this part.

(1) Temperatures measured with the underbody temperature sensor shall follow the profile with a maximum deviation of 3 °F at any time and an average temperature deviation not to exceed 2 °F, where the average deviation is calculated using the absolute value of each measured deviation. In addition, the temperature from the sidewall temperature sensors shall follow the profile with a maximum deviation of 5 °F at any time.

(2) Ambient temperatures shall be measured at least every minute. Temperature cycling shall begin when time = 0 minutes, as specified in paragraph (i)(5) of this section.

(d) The diurnal enclosure shall be purged for several minutes prior to the test. WARNING: If at any time the concentration of hydrocarbons, of methanol or of methanol and hydrocarbons exceeds 15,000 ppm C the enclosure should be immediately purged. This concentration provides at least a 4:1 safety factor against the lean flammability limit.

(e) The test vehicle, with the engine shut off and the test vehicle windows and luggage compartment(s) opened, shall be moved into the diurnal enclosure.

(f)–(g) [Reserved]

(h) Prior to sampling for emissions and throughout the period of cycled ambient temperatures, the mixing fan(s) shall circulate the air at a rate of 0.8±0.2 cfm per cubic foot of ambient volume. The mixing fan(s), plus any additional fans if needed, shall also maintain a minimum wind speed of 5 mph (8 km/hr) under the fuel tank of the test vehicle. The Administrator may adjust fan speed and location to ensure sufficient air circulation around the fuel tank. The wind speed requirement may be satisfied by consistently using a fan configuration that has been demonstrated to maintain a broad 5-mph air flow in the vicinity of the vehicle's fuel tank, subject to verification by the Administrator.

(i) Emission sampling may begin as follows:

(1) The FID (or HFID) hydrocarbon analyzer shall be zeroed and spanned immediately prior to the sampling.

(2) Impingers charged with known volumes of pure deionized water shall be placed in the methanol sampling system (methanol-fueled vehicles only).

(3) Turn off purge blowers (if not already off).

(4) Close and seal enclosure doors (if not already closed and sealed).

(5) Within 10 minutes of closing and sealing the doors, analyze enclosure atmosphere for hydrocarbons and record. This is the initial (time = 0 minutes) hydrocarbon concentration, C_{HCi}, required in § 86.143. Hydrocarbon emissions may be sampled continuously during the test period.

(6) Analyze the enclosure atmosphere for methanol, if applicable, and record. The methanol sampling must start simultaneously with the initiation of the hydrocarbon analysis and continue for 4.0±0.5 minutes. This is the initial methanol concentration, C_{CH_3OHi}, required in § 86.143. Record the time elapsed during this analysis. If the 4-minute sample period is inadequate to collect a sample of sufficient concentration to allow accurate GC analysis, rapidly collect the methanol sample in a bag and then bubble the bag sample through the impingers at the specified flow rate. The time elapsed between collection of the bag sample and flow through the impingers should be minimized to prevent any losses. If the test is conducted in a fixed-volume enclosure that allows airflow into and out of the enclosure, the effect of makeup air dilution must be factored into the analysis.

(j) If testing indicates that a vehicle design may result in fuel temperature responses during enclosure testing that are not representative of in-use summertime conditions, the Administrator may adjust air circulation and temperature during the test as needed to ensure that the test sufficiently duplicates the vehicle's in-use experience.

(k) The FID (or HFID) hydrocarbon analyzer shall be zeroed and spanned immediately prior to the end of each emission sampling period.

(l) Fresh impingers shall be installed in the methanol collection system immediately prior to the end of each emission measurement, if applicable.

(m) The end of the first, second, and third emission sampling period shall occur 1440±6, 2880±6, 4320±6 minutes, respectively, after the beginning of the initial sampling, as specified in paragraph (i)(5) of this section.

(1) At the end of each emission sampling period, analyze the enclosure atmosphere for hydrocarbons and record. This is the final hydrocarbon concentration, C_{HCf}, required in § 86.143. The emission measurement at the end of each period becomes the initial hydrocarbon concentration, C_{HCi}, of the next emission sampling period.

(2) Analyze the enclosure atmosphere for methanol, if applicable, and record. The methanol sampling must start simultaneously with the initiation of the hydrocarbon analysis and continue for 4.0±0.5 minutes. This is the final (time = 1440 minutes) methanol concentration, C_{CH_3OHf}, required in § 86.143. Record the time elapsed during this analysis. If the 4-minute sample period is inadequate to collect a sample of sufficient concentration to allow accurate GC analysis, rapidly collect the methanol sample in a bag and then bubble the bag sample through the impingers at the specified flow rate. The time elapsed between collection of the bag sample and flow through the impingers should be minimized to prevent any losses. If the test is conducted in a fixed-volume enclosure that allows airflow into and out of the enclosure, the effect of makeup air dilution must be factored into the analysis.

(n) At the end of the temperature cycling period the enclosure doors shall be unsealed and opened, the test vehicle windows and luggage compartments may be closed and the test vehicle, with the engine shut off, shall be removed from the enclosure.

(o) This completes the full three-diurnal evaporative emission test sequence described in § 86.130–96.

(p) For the supplemental two-diurnal test sequence described in § 86.130–96, the following steps shall be performed in lieu of the steps described in paragraphs (b) through (n) of this section.

(1) For the supplemental two-diurnal test sequence, the test vehicle shall be soaked for not less than 6 hours nor more than 36 hours between the end of the hot soak test described in § 86.138–96(k), and the start of the two-diurnal emission test. For at least the last 6 hours of this period, the vehicle shall be soaked at 72±3 °F.

(2) The vehicle shall be tested for diurnal emissions according to the procedures specified in paragraphs (c) through (n) of this section, except that the test includes only two 24-hour periods. Therefore the end of the first and second emission sampling periods shall occur 1440±6 and 2880±6 minutes, respectively, after the initial sampling.

(3) This completes the supplemental two-diurnal test sequence for evaporative emission measurement.

[58 FR 16039, Mar. 24, 1993, as amended at 59 FR 48509, Sept. 21, 1994; 60 FR 43896, Aug. 23, 1995]

§ 86.134–96 Running loss test.

(a) *Overview*. Gasoline- and methanol-fueled vehicles are to be tested for running loss emissions during simulated high-temperature urban driving; this test is not required for gaseous-fueled vehicles. During operation, tank temperatures are controlled according to a prescribed profile to simulate in-use conditions. If the vehicle is determined to have exceeded the standard before the end of the running loss test, the test may be terminated without invalidating the data. The test can be run either in a sealed enclosure or with the point-source method, as specified in paragraph (g) of this section. Measurement of vapor temperature is optional during the running loss test; however, if testing by the Administrator shows that a vehicle has exceeded an emission standard without measurement of vapor temperatures, the manufacturer may, utilizing its own resources, conduct subsequent testing on that vehicle to determine if the exceedance is attributable to inadequate control of vapor temperatures.

(b) *Driving schedule*. Conduct the running loss test by operating the test vehicle through one Urban Dynamometer

Driving Schedule (UDDS), a 2-minute idle, two New York City Cycles, another 2-minute idle, another UDDS, then another 2-minute idle (see § 86.115 and appendix I of this part). Fifteen seconds after the engine starts, place the transmission in gear. Twenty seconds after the engine starts, begin the initial vehicle acceleration of the driving schedule. The transmission shall be operated according to the specifications of § 86.128 during the driving cycles.

(c) *Dynamometer operation.* (1) The exhaust from the vehicle must be routed outside the test cell or enclosure. Exhaust gases may, but need not, be collected and sampled.

(2) Provisions of § 86.135–90(c) shall apply.

(3) Practice runs over the prescribed driving schedule may not be performed at test point.

(4) Provisions of § 86.135–90 (e) and (f) shall apply.

(5) If the dynamometer horsepower must be adjusted manually, it shall be set within 1 hour prior to the running loss test phase. The test vehicle shall not be used to make this adjustment. Dynamometers using automatic control of preselectable power settings may be set any time prior to the beginning of the emissions test.

(6) Dynamometer roll or shaft revolutions shall be used to determine the actual driving distance for the running loss test, D_{RL}, required in § 86.143. The revolutions shall be measured on the same roll or shaft used for measuring the vehicle's speed.

(7) Provisions of § 86.135–90(i) shall apply.

(8) The test run may be stopped if a warning light or gauge indicates that the vehicle's engine coolant has overheated.

(d) *Engine starting and restarting.* (1) Provisions of § 86.136–90(a) shall apply.

(2) If the vehicle does not start after the manufacturer's recommended cranking time (or 10 continuous seconds in the absence of a manufacturer's recommendation), cranking shall cease for the period recommended by the manufacturer (or 10 seconds in the absence of a manufacturer's recommendation). This may be repeated for up to three start attempts. If the vehicle does not start after three attempts, the reason for failure to start shall be determined. If failure to start is an operational error, the vehicle shall be rescheduled for testing, starting with the soak period immediately preceding the running loss test.

(3) If failure to start is caused by a vehicle malfunction, corrective action of less than 30 minutes duration may be taken (according to § 86.090–25), and the test continued, provided that the ambient conditions to which the vehicle is exposed are maintained at 95±5 °F (35±3 °C). When the engine starts, the timing sequence of the driving schedule shall begin. If failure to start is caused by vehicle malfunction and the vehicle cannot be started, the test shall be voided, the vehicle removed from the dynamometer, and corrective action may be taken according to § 86.090–25. The reason for the malfunction (if determined) and the corrective action taken shall be reported to the Administrator.

(4) Provisions of § 86.136–90(e) shall apply.

(e) *Pressure checks.* No pressure checks of the evaporative system shall be allowed. Under no circumstances will any changes/repairs to the evaporative emissions control system be allowed.

(f) *Temperature stabilization.* Immediately after the hot transient exhaust emission test, the vehicle shall be soaked in a temperature controlled area for a maximum of 6 hours until the fuel temperature is stabilized. The fuel may be heated or cooled to stabilize fuel temperatures, but the fuel heating rate must not exceed 5 °F in any 1-hour interval during the soak period. A manufacturer may use a faster heating rate or a longer period for stabilizing fuel temperatures if the needed heating cannot be easily accomplished in the 6-hour period, subject to Administrator approval.

(1) Fuel temperatures must be held at 95 ±3 °F for at least one hour before the start of the running loss test.

(2) If a vehicle's fuel temperature profile has an initial temperature lower than 95 °F, as described in § 86.129–94(d)(7)(v), the fuel in the test vehicle must be stabilized to within 3 °F of that temperature for at least one

hour before the start of the running loss test.

(g) *Running loss test*. The running loss test may be conducted either by the enclosure method, or by the point-source method.

(1) *Enclosure method*. (i) The running loss enclosure shall be purged for several minutes immediately prior to the test. WARNING: If at any time the concentration of hydrocarbons, of methanol, or of methanol and hydrocarbons exceeds 15,000 ppm C the enclosure should be immediately purged. This concentration provides at least a 4:1 safety factor against the lean flammability limit.

(ii) The FID hydrocarbon analyzer shall be zeroed and spanned immediately prior to the test.

(iii) If not already on, the running loss enclosure mixing fan(s) shall be turned on at this time. Throughout the test, the mixing fan(s) shall circulate the air at a rate of at least 1.0 cfm per cubic foot of ambient volume.

(iv) The test vehicle, with the engine off, shall be moved onto the dynamometer in the running loss enclosure. The vehicle engine compartment cover shall be unlatched, but closed as much as possible, allowing for the air intake equipment specified in paragraph (g)(1)(vii) of this section. The vehicle engine compartment cover may be closed if alternate routing is found for the air intake equipment. Any windows, doors, and luggage compartments shall be closed. A window may be opened to direct cooling air into the passenger compartment of the vehicle, if the vehicle is not equipped with its own air conditioning.

(v) Fans shall be positioned as described in §§ 86.107–96 (d) and (h).

(vi) Set vehicle air conditioning controls as described in 40 CFR 1066.835.

(vii) Connect the air intake equipment to the vehicle, if applicable. This connection shall be made to minimize leakage.

(viii) The temperature and pressure recording systems shall be started. Measurement of vapor temperature is optional during the running loss test. If vapor temperature is not measured, fuel tank pressure need not be measured.

(ix) Turn off purge blowers (if not already off).

(x) The temperature of the liquid fuel shall be monitored and recorded at least every 15 seconds with the temperature recording system specified in § 86.107–96(e).

(xi) Close and seal the enclosure doors.

(xii) When the ambient temperature is 95±5 °F (35±3 °C) and the fuel has been stabilized according to paragraph (f) of this section, the running loss test may begin. Measure the initial ambient temperature and pressure.

(A) Analyze enclosure atmosphere for hydrocarbons and record. This is the initial (time = 0 minutes) hydrocarbon concentration, C_{HCi}, required in § 86.143. Hydrocarbon emissions may be sampled continuously during the test period.

(B) Analyze the enclosure atmosphere for methanol, if applicable, and record. The methanol sampling must start simultaneously with the initiation of the hydrocarbon analysis and continue for 4.0±0.5 minutes. This is the initial (time = 0 minutes) methanol concentration, C_{CH_3OHi}, required in § 86.143. Record the time elapsed during this analysis. If the 4-minute sample period is inadequate to collect a sample of sufficient concentration to allow accurate GC analysis, rapidly collect the methanol sample in a bag and then bubble the bag sample through the impingers at the specified flow rate. The time elapsed between collection of the bag sample and flow through the impingers should be minimized to prevent any losses.

(xiii) Start the engine and begin operation of the vehicle over the drive cycle specified in paragraph (b) of this section.

(xiv) The ambient temperature shall be maintained at 95±5 °F (95±2 °F on average) during the running loss test, measured at the inlet to the cooling fan in front of the vehicle; it shall be recorded at least every 60 seconds.

(xv) The fuel temperature during the dynamometer drive shall be controlled to match the fuel tank temperature profile determined in § 86.129. Measured fuel temperatures must be within ±3 °F of the target profile throughout the

test run. Vapor temperatures, if measured, must be within ±5 °F of the target profile during the first 4186 seconds of the running loss test, and within ±3 °F for the remaining 120 seconds of the test run. For any vehicle complying with the test standards, vapor temperatures may be higher than the specified tolerances without invalidating test results. For testing by the Administrator, vapor temperatures may be lower than the specified tolerances without invalidating test results. If the test vehicle has more than one fuel tank, the temperatures for both fuel tanks shall follow the target profiles determined in § 86.129. The control system shall be tuned and operated to provide smooth and continuous tank temperature profiles that are representative of the on-road profiles.

(xvi) Fuel tank pressure must not exceed 10 inches of water during the running loss test, except that temporary exceedances are allowed for vehicles whose tank pressure remained below 10 inches of water during the entire outdoor driving period specified in § 86.129. These temporary pressure exceedances may not occur for more than 10 percent of the total driving time.

(xvii) The FID (or HFID) hydrocarbon analyzer shall be zeroed and spanned immediately prior the end of the test.

(xviii) Fresh impingers shall be installed in the methanol collection system immediately prior to the end of the test, if applicable.

(xix) The running loss test ends with the completion of the third 2-minute idle period.

(xx) At the end of the running loss test:

(A) Analyze the enclosure atmosphere for hydrocarbons and record. This is the final hydrocarbon concentration, C_{HCf}, required in § 86.143.

(B) Analyze the enclosure atmosphere for methanol, if applicable, and record. The methanol sampling must start prior to the end of the test and continue for 4.0±0.5 minutes. The methanol sampling must be completed within 2 minutes after the end of the running loss test. This is the final methanol concentration, C_{CH_3OHf}, required in § 86.143. Record the time elapsed during this analysis. If the 4-minute sample period is inadequate to collect a sample of sufficient concentration to allow accurate GC analysis, rapidly collect the methanol sample in a bag and then bubble the bag sample through the impingers at the specified flow rate. The time elapsed between collection of the bag sample and flow through the impingers should be minimized to prevent any losses.

(C) Turn off all the fans specified in § 86.107–96(d). Also, the time that the vehicle's engine compartment cover is open for removal of air intake equipment, if applicable, shall be minimized to avoid loss of heat from the engine compartment.

(xxi) Turn off any CVS apparatus (if not already turned off).

(2) *Point-source method.* (i) The test vehicle, with the engine off, shall be moved onto the dynamometer. The vehicle engine compartment cover and any windows, doors, and luggage compartments shall be closed.

(ii) Fans shall be positioned as described in §§ 86.135–90(b) and 86.107–96(d).

(iii) The running loss vapor vent collection system shall be properly positioned at the potential fuel vapor vents or leaks of the vehicle's fuel system. Typical vapor vents for current fuel systems are the ports of the evaporative emission canister and the pressure relief vent of the fuel tank (typically integrated into the fuel tank cap).

(iv) The running loss vapor vent collection system may be connected to a PDP-CVS or CFV-CVS bag collection system. Otherwise, running loss vapors shall be sampled continuously with analyzers meeting the requirements of § 86.107–96(b).

(v) Fans shall be positioned as described in § 86.107–96(d).

(vi) Set vehicle air conditioning controls as described in 40 CFR 1066.835.

(vii) The temperature and pressure recording systems shall be started. Measurement of vapor temperature is optional during the running loss test. If vapor temperature is not measured, fuel tank pressure need not be measured.

(viii) The temperature of the liquid fuel shall be monitored and recorded at least every 15 seconds with the temperature recording system specified in § 86.107–96(e).

(ix) When the ambient temperature is 95±5 °F (35±3 °C) and the fuel tank temperature is 95±3 °F the running loss test may begin.

(x) The ambient temperature shall be maintained at 95±5 °F (95±2 °F on average) during the running loss test, measured at the inlet to the cooling fan in front of the vehicle; it shall be recorded at least every 60 seconds.

(xi) Fuel temperatures shall be controlled according to the specifications of paragraph (g)(1)(xv) of this section.

(xii) The tank pressure requirements described in paragraph (g)(1)(xvi) of this section apply also to running loss testing by the point source method.

(xiii) The running loss test ends with completion of the third 2-minute idle period.

(xiv) If emissions are collected in bags, the sample bags must be analyzed within 20 minutes of their respective sample collection phases, as described in § 86.137–94(b)(15). The results of the analysis are used in § 86.143 to calculate the mass of hydrocarbons emitted.

(xv) At the end of the running loss test, turn off all the fans specified in § 86.107–96(d).

(3) With prior approval of the Administrator, manufacturers may use an alternative running loss test procedure, provided the alternative test procedure is shown to yield equivalent or superior emission results (in terms of quality control, accuracy and repeatability) for the running loss, hot soak and diurnal portions of the three diurnal-plus-hot-soak test sequence. Additionally, the Administrator may conduct certification and in-use testing using the test procedures outlined in paragraph (g)(1) of this section, paragraph (g)(2) of this section or the alternative running loss test procedure as approved for a specific vehicle.

(4) *High-altitude testing.* For testing under high-altitude conditions, decrease the target ambient and fuel temperatures by 5 °F. For example, the fuel temperature profile should be adjusted downward based on a nominal starting temperature of 90 °F, and the nominal temperature in the enclosure should be 90 °F.

(h) Following the completion of the running loss drive, the vehicle may be tested for hot soak emissions as specified in § 86.138–96.

[58 FR 16040, Mar. 24, 1993, as amended at 59 FR 48510, Sept. 21, 1994; 60 FR 43896, Aug. 23, 1995; 70 FR 72927, Dec. 8, 2005; 79 FR 23696, Apr. 28, 2014]

§ 86.135–12 Dynamometer procedure.

(a) *Overview.* The dynamometer run consists of two tests, a ''cold'' start test, after a minimum 12-hour and a maximum 36-hour soak according to the provisions of §§ 86.132 and 86.133, and a ''hot'' start test following the ''cold'' start by 10 minutes. Engine startup (with all accessories turned off), operation over the UDDS, and engine shutdown make a complete cold start test. Engine startup and operation over the first 505 seconds of the driving schedule complete the hot start test. The exhaust emissions are diluted with ambient air in the dilution tunnel as shown in Figure B94–5 and Figure B94–6. A dilution tunnel is not required for testing vehicles waived from the requirement to measure particulates. Six particulate samples are collected on filters for weighing; the first sample plus backup is collected during the first 505 seconds of the cold start test; the second sample plus backup is collected during the remainder of the cold start test (including shutdown); the third sample plus backup is collected during the hot start test. Continuous proportional samples of gaseous emissions are collected for analysis during each test phase. For gasoline-fueled, natural gas-fueled and liquefied petroleum gas-fueled Otto-cycle vehicles, the composite samples collected in bags are analyzed for THC, CO, CO_2, CH_4, NO_X, and N_2O. For petroleum-fueled diesel-cycle vehicles (optional for natural gas-fueled, liquefied petroleum gas-fueled and methanol-fueled diesel-cycle vehicles), THC is sampled and analyzed continuously according to the provisions of § 86.110–94. Parallel samples of the dilution air are similarly analyzed for THC, CO, CO_2, CH_4, NO_X, and N_2O. For natural gas-fueled, liquefied petroleum gas-fueled and methanol-fueled vehicles, bag samples are collected and analyzed for THC (if not sampled continuously), CO, CO_2, CH_4, NO_X, and N_2O. For methanol-fueled vehicles, methanol and formaldehyde samples are

taken for both exhaust emissions and dilution air (a single dilution air formaldehyde sample, covering the total test period may be collected). For ethanol-fueled vehicles, methanol, ethanol, acetaldehyde, and formaldehyde samples are taken for both exhaust emissions and dilution air (a single dilution air formaldehyde sample, covering the total test period may be collected). Parallel bag samples of dilution air are analyzed for THC, CO, CO_2, CH_4, NO_X, and N_2O.

(b) During dynamometer operation, a fixed speed cooling fan shall be positioned so as to direct cooling air to the vehicle in an appropriate manner with the engine compartment cover open. In the case of vehicles with front engine compartments, the fan shall be squarely positioned within 12 inches (30.5 centimeters) of the vehicle. In the case of vehicles with rear engine compartments (or if special designs make the above impractical), the cooling fan shall be placed in a position to provide sufficient air to maintain vehicle cooling. The fan capacity shall normally not exceed 5300 cfm (2.50 m^3/sec). However, if the manufacturer can show that during field operation the vehicle receives additional cooling, and that such additional cooling is needed to provide a representative test, the fan capacity may be increased, additional fans used, variable speed fan(s) may be used, and/or the engine compartment cover may be closed, if approved in advance by the Administrator. For example, the hood may be closed to provide adequate air flow to an intercooler through a factory installed hood scoop. Additionally, the Administrator may conduct certification, fuel economy and in-use testing using the additional cooling set-up approved for a specific vehicle.

(c) The vehicle speed as measured from the dynamometer rolls shall be used. A speed vs. time recording, as evidence of dynamometer test validity, shall be supplied on request of the Administrator.

(d) Practice runs over the prescribed driving schedule may be performed at test point, provided an emission sample is not taken, for the purpose of finding the appropriate throttle action to maintain the proper speed-time relationship, or to permit sampling system adjustment. Both smoothing of speed variations and excessive accelerator pedal perturbations are to be avoided. When using two-roll dynamometers a truer speed-time trace may be obtained by minimizing the rocking of the vehicle in the rolls; the rocking of the vehicle changes the tire rolling radius on each roll. This rocking may be minimized by restraining the vehicle horizontally (or nearly so) by using a cable and winch.

(e) The drive wheel tires may be inflated up to a gauge pressure of 45 psi (310 kPa) in order to prevent tire damage. The drive wheel tire pressure shall be reported with the test results.

(f) If the dynamometer has not been operated during the 2-hour period immediately preceding the test, it shall be warmed up for 15 minutes by operating at 30 mph (48 kph) using a non-test vehicle or as recommended by the dynamometer manufacturer.

(g) If the dynamometer horsepower must be adjusted manually, it shall be set within 1 hour prior to the exhaust emissions test phase. The test vehicle shall not be used to make this adjustment. Dynamometers using automatic control of pre-selectable power settings may be set anytime prior to the beginning of the emissions test.

(h) The driving distance, as measured by counting the number of dynamometer roll or shaft revolutions, shall be determined for the transient cold start, stabilized cold start, and transient hot start phases of the test. The revolutions shall be measured on the same roll or shaft used for measuring the vehicle's speed.

(i) Four-wheel drive and all-wheel drive vehicles may be tested either in a four-wheel drive or a two-wheel drive mode of operation. In order to test in the two-wheel drive mode, four-wheel drive and all-wheel drive vehicles may have one set of drive wheels disengaged; four-wheel and all-wheel drive vehicles which can be shifted to a two-wheel mode by the driver may be tested in a two-wheel drive mode of operation.

[75 FR 25679, May 7, 2010, as amended at 77 FR 63152, Oct. 15, 2012]

§ 86.135–90 Dynamometer procedure.

(a) The dynamometer run consists of two tests—a ''cold'' start test, after a minimum 12-hour and a maximum 36-hour soak according to the provisions of §§ 86.132 and 86.133, and a ''hot'' start test following the ''cold'' start by 10 minutes. Engine startup (with all accessories turned off), operation over the UDDS and engine shutdown make a complete cold-start test. Engine startup and operation over the first 505 seconds of the driving schedule complete the hot start test. The exhaust emissions are diluted with ambient air in the dilution tunnel as shown in Figure B94–5 and Figure B94–6. A dilution tunnel is not required for testing vehicles waived from the requirement to measure particulate matter. Six particulate samples are collected on filters for weighing; the first sample plus backup is collected during the first 505 seconds of the cold-start test; the second sample plus backup is collected during the remainder of the cold-start test (including shutdown); the third sample plus backup is collected during the hot start test. Continuous or batch proportional samples of gaseous emissions are collected for analysis during each test phase. Use the following measurement procedures for each type of engine:

(1) For gasoline-fueled, natural gas-fueled and liquefied petroleum gas-fueled Otto-cycle vehicles, the composite samples collected in bags are analyzed for THC, CO, CO_2, CH_4, and NO_X.

(2) For petroleum-fueled diesel-cycle vehicles (optional for natural gas-fueled, liquefied petroleum gas-fueled and methanol-fueled diesel-cycle vehicles), THC is sampled and analyzed continuously according to the provisions of § 86.110. Parallel samples of the dilution air are similarly analyzed for THC, CO, CO_2, CH_4, and NO_X.

(3) For natural gas-fueled, liquefied petroleum gas-fueled and methanol-fueled vehicles, bag samples are collected and analyzed for THC (if not sampled continuously), CO, CO_2, CH_4, and NO_X.

(4) For methanol-fueled vehicles, methanol and formaldehyde samples are taken for both exhaust emissions and dilution air (a single dilution air formaldehyde sample, covering the total test period may be collected). Parallel bag samples of dilution air are analyzed for THC, CO, CO_2, CH_4, and NO_X.

(b) During dynamometer operation, a fixed speed cooling fan shall be positioned so as to direct cooling air to the vehicle in an appropriate manner with the engine compartment cover open. In the case of vehicles with front engine compartments, the fan shall be squarely positioned within 12 inches (30.5 centimeters) of the vehicle. In the case of vehicles with rear engine compartments (or if special designs make the above impractical), the cooling fan shall be placed in a position to provide sufficient air to maintain vehicle cooling. The fan capacity shall normally not exceed 5300 cfm (2.50 m3/sec). If however, the manufacturer can show that during field operation the vehicle receives additional cooling, and that such additional cooling is needed to provide a representative test, the fan capacity may be increased, additional fans used, variable speed fan(s) may be used, and/or the engine compartment cover may be closed if approved in advance by the Administrator. For example, the hood may be closed to provide adequate air flow to an intercooler through a factory installed hood scoop. Additionally, the Administrator may conduct certification, fuel economy and in-use testing using the additional cooling set-up approved for a specific vehicle.

(c) The vehicle speed as measured from the dynamometer rolls shall be used. A speed *vs.* time recording, as evidence of dynamometer test validity, shall be supplied on request of the Administrator.

(d) Practice runs over the prescribed driving schedule may be performed at test point, provided an emission sample is not taken, for the purpose of finding the appropriate throttle action to maintain the proper speed-time relationship, or to permit sampling system adjustment. Both smoothing of speed variations and excessive accelerator pedal perturbations are to be avoided. When using two-roll dynamometers a truer speed-time trace may be obtained by minimizing the rocking of the vehicle in the rolls; the rocking of the vehicle changes the tire rolling radius on

each roll. This rocking may be minimized by restraining the vehicle horizontally (or nearly so) by using a cable and winch.

(e) The drive wheel tires may be inflated up to a gauge pressure of 45 psi (310 kPa) in order to prevent tire damage. The drive wheel tire pressure shall be reported with the test results.

(f) If the dynamometer has not been operated during the 2-hour period immediately preceding the test, it shall be warmed up for 15 minutes by operating at 30 mph (48 kph) using a non-test vehicle or as recommended by the dynamometer manufacturer.

(g) If the dynamometer horsepower must be adjusted manually, it shall be set within 1 hour prior to the exhaust emissions test phase. The test vehicle shall not be used to make this adjustment. Dynamometers using automatic control of preselectable power settings may be set anytime prior to the beginning of the emissions test.

(h) The driving distance, as measured by counting the number of dynamometer roll or shaft revolutions, shall be determined for the transient cold start, stabilized cold start, and transient hot start phases of the test. The revolutions shall be measured on the same roll or shaft used for measuring the vehicle's speed.

(i) Four-wheel drive and all-wheel drive vehicles may be tested either in a four-wheel drive or a two-wheel drive mode of operation. In order to test in the two-wheel drive mode, four-wheel drive and all-wheel drive vehicles may have one set of drive wheels disengaged; four-wheel and all-wheel drive vehicles which can be shifted to a two-wheel mode by the driver may be tested in a two-wheel drive mode of operation.

[54 FR 14529, Apr. 11, 1989, as amended at 70 FR 72927, Dec. 8, 2005; 74 FR 61547, Nov. 25, 2009; 79 FR 23697, Apr. 28, 2014]

§ 86.136–90 Engine starting and restarting.

(a) *Otto-cycle vehicles.* Paragraph (a) of this section applies to Otto-cycle vehicles.

(1) The engine shall be started according to the manufacturer's recommended starting procedures in the owner's manual. The initial 20-second idle period shall begin when the engine starts.

(2) *Choke operation:* (i) Vehicles equipped with automatic chokes shall be operated according to the manufacturer's operating instructions in the owner's manual, including choke setting and ''kick-down'' from cold fast idle.

(ii) Vehicles equipped with manual chokes shall be operated according to the manufacturer's operating instructions in the owner's manual.

(3) The transmission shall be placed in gear 15 seconds after the engine is started. If necessary, braking may be employed to keep the drive wheels from turning.

(4) The operator may use the choke, accelerator pedal, etc., where necessary to keep the engine running.

(5) If the manufacturer's operating instructions in the owner's manual do not specify a warm engine starting procedure, the engine (automatic and manual-choke engines) shall be started by depressing the accelerator pedal about half way and cranking the engine until it starts.

(b) *Diesel vehicles.* The engine shall be started according to the manufacturers recommended starting procedures in the owners manual. The initial 20-second idle period shall begin when the engine starts. The transmission shall be placed in gear 15 seconds after the engine is started. If necessary, braking may be employed to keep the drive wheels from turning.

(c) If the vehicle does not start after the manufacturer's recommended cranking time (or 10 continuous seconds in the absence of a manufacturer's recommendation), cranking shall cease for the period recommended by the manufacturer (or 10 seconds in the absence of a manufacturer's recommendation). This may be repeated for up to three start attempts. If the vehicle does not start after three attempts, the reason for failure to start shall be determined. The gas flow measuring device on the constant volume sampler (usually a revolution counter) or CFV (and the hydrocarbon integrator and particulate sampling system when testing petroleum-fueled diesel vehicles and the particulate

sampling system when testing methanol-fueled diesel vehicles, see § 86.137) shall be turned off and the sampler selector valves, including the methanol sampler, placed in the ''standby'' position during this diagnostic period. In addition, either the CVS should be turned off, or the exhaust tube disconnected from the tailpipe during the diagnostic period. If failure to start is an operational error, the vehicle shall be rescheduled for testing from a cold start.

(d) If the engine ''false starts'' the operator shall repeat the recommended starting procedure (such as resetting the choke, etc.).

(e) *Stalling.* (1) If the engine stalls during an idle period, the engine shall be restarted immediately and the test continued. If the engine cannot be started soon enough to allow the vehicle to follow the next acceleration as prescribed, the driving schedule indicator shall be stopped. When the vehicle restarts, the driving schedule indicator shall be reactivated.

(2) If the engine stalls during some operating mode other than idle, the driving schedule indicator shall be stopped, the vehicle shall then be restarted and accelerated to the speed required at that point in the driving schedule and the test continued. During acceleration to this point, shifting shall be performed in accordance with § 86.128.

(3) If the vehicle will not restart within one minute, the test shall be voided, the vehicle removed from the dynamometer, corrective action taken, and the vehicle rescheduled for test. The reason for the malfunction (if determined) and the corrective action taken shall be reported to the Administrator.

[54 FR 14530, Apr. 11, 1989, as amended at 58 FR 16042, Mar. 24, 1993; 59 FR 48510, Sept. 21, 1994]

§ 86.137–94 Dynamometer test run, gaseous and particulate emissions.

Section 86.137–94 includes text that specifies requirements that differ from § 86.137–90. Where a paragraph in § 86.137–90 is identical and applicable to § 86.137–94, this may be indicated by specifying the corresponding paragraph and the statement ''[Reserved]. For guidance see § 86.137–90.'' Where a corresponding paragraph of § 86.137–90 is not applicable, this is indicated by the statement ''[Reserved].''

(a) *General.* The dynamometer run consists of two tests, a cold start test, after a minimum 12-hour and a maximum 36-hour soak according to the provisions of § 86.132, and a hot start test following the cold start test by 10 minutes. The vehicle shall be stored prior to the emission test in such a manner that precipitation (e.g., rain or dew) does not occur on the vehicle. The complete dynamometer test consists of a cold start drive of 7.5 miles (12.1 km) and simulates a hot start drive of 7.5 miles (12.1 km). The vehicle is allowed to stand on the dynamometer during the 10 minute time period between the cold and hot start tests. The cold start test is divided into two periods. The first period, representing the cold start ''transient'' phase, terminates at the end of the deceleration which is scheduled to occur at 505 seconds of the driving schedule. The second period, representing the ''stabilized'' phase, consists of the remainder of the driving schedule including engine shutdown. The hot start test, similarly, consists of two periods. The first period, representing the hot start ''transient'' phase, terminates at the same point in driving schedule as the first period of the cold start test. The second period of the hot start test, ''stabilized'' phase, is assumed to be identical to the second period of the cold start test. Therefore, the hot start test terminates after the first period (505 seconds) is run.

(b) The following steps shall be taken for each test:

(1) Place drive wheels of vehicle on dynamometer without starting engine.

(2) Open the vehicle engine compartment cover and position the cooling fan.

(3) For all vehicles, with the sample selector valves in the ''standby'' position, connect evacuated sample collection bags to the dilute exhaust and dilution air sample collection systems.

(4) For methanol-fueled vehicles, with the sample selector valves in the ''standby'' position, insert fresh sample collection impingers into the methanol sample collection system, fresh

impingers or a fresh cartridge into the formaldehyde sample collection system and fresh impingers (or a single cartridge for formaldehyde) into the dilution air sample collection systems for methanol and formaldehyde (background measurements of methanol and formaldehyde may be omitted and concentrations assumed to be zero for calculations in § 86.144).

(5) Start the CVS (if not already on), the sample pumps (except the particulate sample pump, if applicable), the temperature recorder, the vehicle cooling fan, and the heated THC analysis recorder (diesel-cycle only). (The heat exchanger of the constant volume sampler, if used, petroleum-fueled diesel-cycle THC analyzer continuous sample line and filter, methanol-fueled vehicle THC, methanol and formaldehyde sample lines, if applicable, should be preheated to their respective operating temperatures before the test begins).

(6) Adjust the sample flow rates to the desired flow rate and set the gas flow measuring devices to zero.

(i) For gaseous bag samples (except THC samples), the minimum flow rate is 0.17 cfm (0.08 l/sec).

(ii) For THC samples, the minimum FID (or HFID in the case of diesel-cycle and methanol-fueled Otto-cycle vehicles) flow rate is 0.066 cfm (0.031 l/sec).

(iii) For methanol samples, the flow rates shall be set such that the system meets the design criteria of § 86.109 and § 86.110. For samples in which the concentration in the primary impinger exceeds 0.5 mg/l, it is recommended that the mass of methanol collected in the secondary impinger not exceed ten percent of the total mass collected. For samples in which the concentration in the primary impinger does not exceed 0.5 mg/l, analysis of the secondary impingers is not necessary.

(iv) For formaldehyde samples, the flow rates shall be set such that the system meets the design criteria of § 86.109 and § 86.110. For impinger samples in which the concentration of formaldehyde in the primary impinger exceeds 0.1 mg/l, it is recommended that the mass of formaldehyde collected in the secondary impinger not exceed ten percent of the total mass collected. For samples in which the concentration in the primary impinger does not exceed 0.1 mg/l, analysis of the secondary impingers is not necessary.

(7) Attach the exhaust tube to the vehicle tailpipe(s).

(8) Carefully install a particulate sample filter into each of the filter holders. The filters must be handled only with forceps or tongs. Rough or abrasive filter handling will result in erroneous weight determination.

(9) Start the gas flow measuring device, position the sample selector valves to direct the sample flow into the ''transient'' exhaust sample bag, the ''transient'' methanol exhaust sample, the ''transient'' formaldehyde exhaust sample, the ''transient'' dilution air sample bag, the ''transient'' methanol dilution air sample and the ''transient'' formaldehyde dilution air sample (turn on the petroleum-fueled diesel-cycle THC analyzer system integrator, mark the recorder chart, start particulate sample pump No. 1, and record both gas meter or flow measurement instrument readings, if applicable), turn the key on, and start cranking the engine.

(10) Fifteen seconds after the engine starts, place the transmission in gear.

(11) Twenty seconds after the engine starts, begin the initial vehicle acceleration of the driving schedule.

(12) Operate the vehicle according to the Urban Dynamometer Driving Schedule (§ 86.115).

NOTE: During particulate testing, adjust the flow rate through the particulate sample probe to maintain a constant value within ±5 percent of the set flow rate. Record the average temperature and pressure at the gas meter or flow instrument inlet. If the set flow rate cannot be maintained because of high particulate loading on the filter, the test shall be terminated. The test shall be rerun using a lower flow rate, or larger diameter filter, or both.

(13) At the end of the deceleration which is scheduled to occur at 505 seconds, simultaneously switch the sample flows from the ''transient'' bags and samples to the ''stabilized'' bags and samples, switch off gas flow measuring device No. 1, switch off the No. 1 petroleum-fueled diesel hydrocarbon integrator and the No. 1 particulate sample pump, mark the petroleum-fueled diesel hydrocarbon recorder

chart, and close valves isolating particulate filter No. 1, if applicable, start gas flow measuring device No. 2, and start the petroleum-fueled diesel hydrocarbon integrator No. 2 and the No. 2 particulate sample pump and open valves isolating particulate filter No. 2, if applicable. Before the acceleration which is scheduled to occur at 510 seconds, record the measured roll or shaft revolutions and reset the counter or switch to a second counter. As soon as possible transfer the ''transient'' exhaust and dilution air samples to the analytical system and process the samples according to §86.140 obtaining a stabilized reading of the bag exhaust sample on all analyzers within 20 minutes of the end of the sample collection phase of the test. Obtain methanol and formaldehyde sample analyses, if applicable, within 24 hours of the end of the sample collection phase of the test.

(14) Turn the engine off 2 seconds after the end of the last deceleration (at 1,369 seconds).

(15) Five seconds after the engine stops running, simultaneously turn off gas flow measuring device No. 2 and if applicable, turn off the hydrocarbon integrator No. 2, mark the hydrocarbon recorder chart, turn off the No. 2 particulate sample pump and close the valves isolating particulate filter No. 2, and position the sample selector valves to the ''standby'' position (and open the valves isolating particulate filter No. 1, if applicable). Record the measured roll or shaft revolutions (both gas meter or flow measurement instrumentation readings), and reset the counter. As soon as possible, transfer the ''stabilized'' exhaust and dilution air samples to the analytical system and process the samples according to §86.140, obtaining a stabilized reading of the exhaust bag sample on all analyzers within 20 minutes of the end of the sample collection phase of the test. Obtain methanol and formaldehyde sample analyses, if applicable, within 24 hours of the end of the sample period. (If it is not possible to perform analysis on the methanol and formaldehyde samples within 24 hours, the samples should be stored in a dark cold (4–10 °C) environment until analysis. The samples should be analyzed within fourteen days.) If applicable, carefully remove both pairs of particulate sample filters from their respective holders, and place each in a separate petri dish, and cover.

(16) Immediately after the end of the sample period, turn off the cooling fan and close the engine compartment cover.

(17) Turn off the CVS or disconnect the exhaust tube from the tailpipe(s) of the vehicle.

(18) Repeat the steps in paragraphs (b)(2) through (b)(12) of this section for the hot start test, except only two evacuated sample bags, two methanol sample impingers, two formaldehyde sample impingers, and one pair of particulate sample filters, as appropriate, are required. The step in paragraph (b)(9) of this section shall begin between 9 and 11 minutes after the end of the sample period for the cold-start test.

(19) At the end of the deceleration scheduled to occur at 505 seconds, simultaneously turn off gas flow measuring device No. 1 (and the petroleum-fueled diesel hydrocarbon integrator No. 1; mark the petroleum-fueled diesel hydrocarbon recorder chart and turn off the No. 1 particulate sample pump, if applicable) and position the sample selector valve to the ''standby'' position. (Engine shutdown is not part of the hot start test sample period.) Record the measured roll or shaft revolutions (and the No. 1 gas meter reading or flow measurement instrument). Carefully remove the third pair of particulate sample filters from the holder and place in a clean petri dish and cover, if applicable.

(20) As soon as possible, transfer the hot start ''transient'' exhaust and dilution air samples to the analytical system and process the samples according to §86.140, obtaining a stabilized reading of the exhaust bag sample on all analyzers within 20 minutes of the end of the sample collection phase of the test. Obtain methanol and formaldehyde sample analyses, if applicable, within 24 hours of the end of the sample period. If it is not possible to perform analysis on the methanol and formaldehyde samples within 24 hours, the samples should be stored in a dark,

cold (4–10 °C) environment until analysis. Analyze the samples within fourteen days.

(21) As soon as possible, and in no case longer than one hour after the end of the hot start phase of the test, transfer the six particulate filters to the weighing chamber for post-test conditioning, if applicable.

(22) Disconnect the exhaust tube from the vehicle tailpipe(s) and drive the vehicle from dynamometer.

(23) The CVS or CFV may be turned off, if desired.

(24) Vehicles to be tested for evaporative emissions proceed according to § 86.134; vehicles to be tested with the supplemental two-diurnal test sequence for evaporative emissions proceed according to § 86.138–96(k). For all others, this completes the test sequence.

[56 FR 25776, June 5, 1991, as amended at 60 FR 34347, June 30, 1995; 79 FR 23697, Apr. 28, 2014]

§ 86.138–96 Hot soak test.

(a)(1) *Gasoline- and methanol-fueled vehicles.* For gasoline- and methanol-fueled vehicles, the hot soak test shall be conducted immediately following the running loss test. However, sampling of emissions from the running loss test is not required as preparation for the hot soak test.

(2) *Gaseous-fueled vehicles.* Since gaseous-fueled vehicles are not required to perform a running loss test, the hot soak test shall be conducted within seven minutes after completion of the hot start exhaust test.

(b) The hot soak test may be conducted in the running loss enclosure as a continuation of that test or in a separate enclosure.

(1) If the hot soak test is conducted in the running loss enclosure, the driver may exit the enclosure after the running loss test. If exiting, the driver should use the personnel door described in § 86.107–96(a)(2), exiting as quickly as possible with a minimum disturbance to the system. The final hydrocarbon and methanol concentration for the running loss test, measured in § 86.134–96(g)(1)(xx), shall be the initial hydrocarbon and methanol concentration (time = 0 minutes) C_{HCi} and C_{CH_3OHi}, for the hot soak test.

(2) If the vehicle must be moved to a different enclosure, the following steps must be taken:

(i) The enclosure for the hot soak test shall be purged for several minutes prior to completion of the running loss test. WARNING: If at any time the concentration of hydrocarbons, of methanol, or of methanol and hydrocarbons exceeds 15,000 ppm C the enclosure should be immediately purged. This concentration provides at least a 4:1 safety factor against the lean flammability limit.

(ii) The FID hydrocarbon analyzer shall be zeroed and spanned immediately prior to the test.

(iii) Fresh impingers shall be installed in the methanol sample collection system immediately prior to the start of the test, if applicable.

(iv) If not already on, the mixing fan(s) shall be turned on at this time. Throughout the hot soak test, the mixing fan(s) shall circulate the air at a rate of 0.8±0.2 cfm per cubic foot of the nominal enclosure volume.

(v) Begin sampling as follows:

(A) Analyze the enclosure atmosphere for hydrocarbons and record. This is the initial (time = 0 minutes) hydrocarbon concentration, C_{HCi}, required in § 86.143. Hydrocarbon emissions may be sampled continuously during the test period.

(B) Analyze the enclosure atmosphere for methanol, if applicable, and record. The methanol sampling must start simultaneously with the initiation of the hydrocarbon analysis and continue for 4.0±0.5 minutes. This is the initial (time = 0 minutes) methanol concentration, C_{CH_3OHi}, required in § 86.143. Record the time elapsed during this analysis. If the 4-minute sample period is inadequate to collect a sample of sufficient concentration to allow accurate GC analysis, rapidly collect the methanol sample in a bag and then bubble the bag sample through the impingers at the specified flow rate. The time elapsed between collection of the bag sample and flow through the impingers should be minimized to prevent any losses.

(vi) The vehicle engine compartment cover shall be closed (if not already closed), the cooling fan shall be moved, the vehicle shall be disconnected from

the dynamometer and any sampling system, and then driven at minimum throttle to the enclosure for the hot soak test. These steps should be done as quickly as possible to minimize the time needed to start the hot soak test.

(vii) The vehicle's engine must be stopped before any part of the vehicle enters the enclosure.

(viii) The vehicle shall enter the enclosure; the enclosure doors shall be closed and sealed within 2 minutes of engine shutdown and within seven minutes after the end of the running loss test.

(ix) The test vehicle windows and any luggage compartments shall be opened (if not already open). The vehicle engine compartment cover shall be closed (if not already closed).

(c) [Reserved]

(d) The temperature recording system shall be started and the time of engine shutoff shall be noted on the evaporative emission hydrocarbon data recording system.

(e) For the first 5 minutes of the hot soak test, the ambient temperature shall be maintained at 95±10 °F. For the remainder of the hot soak test, the ambient temperature shall be maintained at 95±5 °F (95±2 °F on average).

(f) The 60±0.5 minute hot soak begins when the enclosure doors are sealed (or when the running loss test ends, if the hot soak test is conducted in the running loss enclosure).

(g) The FID (or HFID) hydrocarbon analyzer shall be zeroed and spanned immediately prior to the end of the test.

(h) Fresh impingers shall be installed in the methanol collection system immediately prior to the end of the test, if applicable.

(i) [Reserved]

(j) At the end of the 60±0.5 minute test period:

(1) Analyze the enclosure atmosphere for hydrocarbons and record. This is the final (time = 60 minutes) hydrocarbon concentration, C_{HCf}, required in § 86.143.

(2) Analyze the enclosure atmosphere for methanol and record, if applicable. The methanol sampling must start simultaneously with the initiation of the hydrocarbon analysis and continue for 4.0±0.5 minutes. This is the final (time = 60 minutes) methanol concentration, C_{CH_3OHf}, required in § 86.143. Record the time elapsed during this analysis. If the 4-minute sample period is inadequate to collect a sample of sufficient concentration to allow accurate GC analysis, rapidly collect the methanol sample in a bag and then bubble the bag sample through the impingers at the specified flow rate. The time elapsed between collection of the bag sample and flow through the impingers should be minimized to prevent any losses.

(k) For the supplemental two-diurnal test sequence (*see* § 86.130–96), perform a hot soak test as described in this section, except that the test shall be conducted within seven minutes after completion of the hot start exhaust test and temperatures throughout the hot soak measurement period must be between 68 ° and 86 °F. This hot soak test is followed by two consecutive diurnal heat builds, described in § 86.133–96(p).

(l) If the vehicle is to be tested for diurnal emissions, follow the procedure outlined in § 86.133–96.

[58 FR 16042, Mar. 24, 1993, as amended at 59 FR 48510, Sept. 21, 1994; 60 FR 43897, Aug. 23, 1995; 75 FR 22980, Apr. 30, 2010]

§ 86.139–90 Particulate filter handling and weighing.

(a) At least 8 hours, but not more than 56 hours before the test, place each filter in an open, but protected, petri dish and place in the weighing chamber which meets the humidity and temperature specifications of § 86.112.

(b) At the end of the 8 to 56 hour stabilization period, weigh the filter on a balance having a precision of one microgram. Record this weight. This reading is the tare weight.

(c) The filter shall then be stored in a covered petri dish which shall remain in the weighing chamber until needed for testing.

(d)(1) If the filter is not used within one hour of its removal from the weighing chamber, it shall be reweighed.

(2) The one hour limit may be replaced by an eight-hour limit if one or both of the following conditions are met:

(i) A stabilized filter is placed and kept in a sealed filter holder assembly with the ends plugged, or

(ii) A stabilized filter is placed in a sealed filter holder assembly, which is then immediately placed in a sample line through which there is no flow.

(e) After the test, and after the sample filter is returned to the weighing room, condition it for at least 1 hour but not more than 56 hours. Then weigh a second time. This latter reading is the gross weight of the filter. Record this weight.

(f) The net weight (P_e) is the gross weight minus the tare weight.

NOTE: Should the sample on the filter contact the petri dish or any other surface, the test is void and must be rerun.

[54 FR 14532, Apr. 11, 1989]

§ 86.140–94 Exhaust sample analysis.

The following sequence shall be performed in conjunction with each series of measurements:

(a) For CO, CO_2, CH_4, NO_X, and for Otto-cycle and methanol-fueled, natural gas-fueled and liquefied petroleum gas-fueled (if non-heated FID option is used) diesel vehicle HC:

(1) Zero the analyzers and obtain a stable zero reading. Recheck after tests.

(2) Introduce span gases and set instrument gains. In order to avoid errors, span and calibrate at the same flow rates used to analyze the test sample. Span gases should have concentrations equal to 75 to 100 percent of full scale. If gain has shifted significantly on the analyzers, check the calibrations. Show actual concentrations on chart.

(3) Check zeroes; repeat the procedure in paragraphs (a) (1) and (2) of this section if required.

(4) Check flow rates and pressures.

(5) Measure THC, CO, CO_2, CH_4, and NO_X concentrations of samples.

(6) Check zero and span points. If difference is greater than 2 percent of full scale, repeat the procedure in paragraphs (a) (1) through (5) of this section.

(b) For petroleum-fueled, natural gas-fueled and liquefied petroleum gas-fueled (if HFID is used) diesel vehicle HC:

(1) Zero HFID analyzer and obtain a stable zero reading.

(2) Introduce span gas and set instrument gains. Span gas should have concentration equal to 75 to 100 percent of full scale.

(3) Check zero as in paragraph (b)(1) of this section.

(4) Introduction of zero and span gas into the analyzer can be accomplished by either of the following methods:

(i) Close heated valve in THC sample (see Figures B94–5 or B94–6) and allow gases to enter HFID. Extreme care should be taken not to introduce gases under high pressure.

(ii) Connect zero and span line directly to THC sample probe and introduce gases at a flow rate greater than 125 percent of the HFID flow rate with the CVS blower operating (see Figures B94–5 or B94–6). Excess flow must be allowed to exit probe inlet.

NOTE: In order to minimize errors, HFID flow rate and pressure during zero and span (and background bag reading) must be exactly the same as that used during testing.

(5) Continuously record (integrate electronically if desired) dilute THC emission levels during test. Background samples are collected in sample bags and analyzed as in paragraphs (b)(4) (i) or (ii) of this section.

(6) Check zero and span as in paragraphs (b) (1) through (4) of this section. If difference is greater than 2 percent of full scale, void test and check for THC ''hangup'' or electronic drift in analyzer.

(c) For CH_3OH (methanol-fueled vehicles), introduce test samples into the gas chromatograph and measure the concentration. This concentration is C_{MS} in the calculations.

(d) For HCHO (methanol-fueled vehicles), introduce formaldehyde test samples into the high pressure liquid chromatograph and measure the concentration of formaldehyde as a dinitrophenylhydrazine derivative in acetonitrile. This concentration is C_{FS} in the calculations.

(e) For CH_4 analysis:

(1) In the event that the procedure results in negative $NMHC_{wm}$ values (as may occur with high methane fractions), any negative $NMHC_{wm}$ value whose absolute value is less than 10 percent of the NMHC standard shall be

rounded to zero. Negative $NMHC_{wm}$ values whose absolute value is more than 10 percent of the NMHC standard shall require sample remeasurement. If the 10 percent criterion cannot be met after remeasurement, the test will be void.

(2) Other sampling procedures may be used if shown to yield equivalent or superior results and if approved in advance by the Administrator.

[56 FR 25777, June 5, 1991, as amended at 59 FR 48510, Sept. 21, 1994; 60 FR 34347, June 30, 1995]

§ 86.142–90 Records required.

The following information shall be recorded with respect to each test:

(a) Test number.

(b) System or device tested (brief description).

(c) Date and time of day for each part of the test schedule.

(d) Test results. Also include a comparison of drive cycle energy and target cycle energy relative to both inertia and road load forces as specified in 40 CFR 1066.425 for each drive cycle or test phase, as appropriate.

(e) Driver and equipment operator IDs.

(f) *Vehicle*. ID number, manufacturer, model year, standards, engine family, evaporative emissions family, basic engine description (including displacement, number of cylinders, turbo-/supercharger used, and catalyst usage), fuel system (including number of carburetors, number of carburetor barrels, fuel injection type, and fuel tank(s) capacity and location), engine code, gross vehicle weight rating, inertia weight class, actual curb weight at zero miles, actual road load at 50 mph (80 kph), transmission configuration, axle ratio, car line, system miles, idle rpm, and drive wheel tire pressure, as applicable.

(g) *Dynamometer*. Dynamometer ID, inertia weight setting, indicated power absorption setting, records to verify compliance with the vehicle speed versus time requirements of the test, and driving distance for each of the three phases of the test, calculated from the measured roll or shaft revolutions.

(h) *Gas analyzers*. Analyzer bench ID, analyzer ranges, recordings of analyzer output during zero, span, and sample readings.

(i) Recorder charts: Test number, date, vehicle ID, operator ID, and identification of the measurements recorded.

(j) Test cell barometric pressure, ambient temperature, and humidity.

NOTE: A central laboratory barometer may be used: *Provided*, that individual test cell barometric pressures are shown to be within ±0.1 percent of the barometric pressure at the central barometer location.

(k) *Temperatures*. Records to verify compliance with the ambient temperature requirements throughout the test procedure and recordings of vehicle fuel temperature(s) during the diurnal test and of the enclosure temperatures during the diurnal and hot soak tests.

(l) *CFV-CVS*. Total dilute exhaust volume (Vmix) for each phase of the exhaust test.

(m) *PDP-CVS*. Test measurements required to calculate the Vmix. Total dilute exhaust volume (Vmix) for each phase of the exhaust test.

(n) The humidity of the dilution air.

NOTE: If conditioning columns are not used (see §§86.122 and 86.144) this measurement can be deleted. If the conditioning columns are used and the dilution air is taken from the test cell, the ambient humidity can be used for this measurement.

(o) *Additional records required for diesel vehicles*. (1) Pressure and temperature of the dilute exhaust mixture (and background air if sampled) at the inlet to the gas meter used for particulate sampling.

(2) The temperature of the dilute exhaust mixture inside the dilution tunnel near the inlet of the particulate probe.

(3) The temperature of the gas flowing in the heated sample line before the heated filter, and also before the HFID, and the temperature of the control system of the heated hydrocarbon detector.

(4) Gas meter or flow measurement instrumentation readings at the start of each sample period and at the end of each sample period.

(5) The stabilized pre-test weight and post-test weight of each particulate sample and back-up filter.

(6) Continuous temperature and humidity recording of the ambient air in

which the particulate filters were stabilized.

(p) *Additional required records for methanol-fueled vehicles.* (1) Specification of the methanol-fuel or methanol-fuel mixtures used during the test.

(2) Volume of sample passed through the methanol sampling system and the volume of deionized water in each impinger.

(3) The concentration of the GC analyses of the test samples (methanol).

(4) Volume of sample passed through the formaldehyde sampling system and the volume of DNPH solution used.

(5) The concentration of the HPLC analysis of the test sample (formaldehyde).

(6) The temperatures of the sample lines before the HFID and the impinger, the temperature of the exhaust transfer duct (as applicable), and the temperature of the control system of the heated hydrocarbon detector.

(7) A continuous measurement of the dew point of the raw and diluted exhaust. This requirement may be omitted if the temperatures of all heated lines are kept above 220 °F, or if the manufacturer performs an engineering analysis demonstrating that the temperature of the heated systems remains above the maximum dew point of the gas stream throughout the course of the test.

(q) *Additional required records for natural gas-fueled vehicles.* Composition, including all carbon containing compounds; e.g. CO_2, of the natural gas-fuel used during the test. C_1 and C_2 compounds shall be individually reported. C_3 and heavier hydrocarbons, and C_6 and heavier compounds may be reported as a group.

(r) *Additional required records for liquefied petroleum gas-fueled vehicles.* Composition of the liquefied petroleum gas-fuel used during the test. Each hydrocarbon compound present, through C_4 compounds, shall be individually reported. C_5 and heavier hydrocarbons may be reported as a group.

[54 FR 14533, Apr. 11, 1989, as amended at 58 FR 58422, Nov. 1, 1993; 59 FR 48510, Sept. 21, 1994; 60 FR 34348, June 30, 1995; 79 FR 23697, Apr. 28, 2014]

§ 86.143–96 Calculations; evaporative emissions.

(a) The following equations are used to calculate the evaporative emissions from gasoline- and methanol-fueled vehicles, and for gaseous-fueled vehicles.

(b) Use the measurements of initial and final concentrations to determine the mass of hydrocarbons and methanol emitted. For testing with pure gasoline, methanol emissions are assumed to be zero.

(1) For enclosure testing of diurnal, hot soak, and running loss emissions:

(i) Methanol emissions:

$$M_{CH3OH} = V_n \times \left(\left[\frac{\left(C_{MS1f} \times AV_{1f}\right) + \left(C_{MS2f} \times AV_{2f}\right)}{V_{Ef}} \right] - \left[\frac{\left(C_{MS1i} \times AV_{1i}\right) + \left(C_{MS2i} \times AV_{2i}\right)}{V_{Ei}} \right] \right) + \left(M_{CH3OH,out} - M_{CH3OH,in}\right)$$

Where:

(A) M_{CH3OH} = Methanol mass change, μg.

(B) V_n = Net enclosure volume, ft³, as determined by subtracting 50 ft³ (1.42 m³) (volume of vehicle with trunk and windows open) from the enclosure volume. A manufacturer may use the measured volume of the vehicle (instead of the nominal 50 ft³) with advance approval by the Administrator: *Provided*, the measured volume is determined and used for all vehicles tested by that manufacturer.

(C) [Reserved]

(D) V_E = Volume of sample withdrawn, ft³. Sample volumes must be corrected for differences in temperature to be consistent with determination of V_n, prior to being used in the equation.

(E) [Reserved]

(F) C_{MS} = GC concentration of sample, μg/ml.

(G) AV = Volume of absorbing reagent in impinger.

(H) P_B = Barometric pressure at time of sampling, in. Hg.

(I) i = Initial sample.

(J) f = Final sample.

(K) 1 = First impinger.

(L) 2 = Second impinger.

(M) $M_{CH3OH,\ out}$ = mass of methanol exiting the enclosure, in the case of fixed-volume enclosures for diurnal emission testing, μg.

(N) $M_{CH3OH,\ in}$ = mass of methanol entering the enclosure, in the case of fixed-volume enclosures for diurnal emission testing, μg.

(ii) Hydrocarbon emissions:

$$M_{HC} = \left(kV_n \times 10^{-4}\right) \times \left(\frac{\left(C_{HC_f} - rC_{CH_3OH_f}\right)P_{B_f}}{T_f} - \frac{\left(C_{HC_i} - rC_{CH_3OH_i}\right)P_{B_i}}{T_i} \right) + M_{HC,out} - M_{HC,in}$$

Where,

(A) M_{HC} = Hydrocarbon mass change, g.

(B) C_{HC} = FID hydrocarbon concentration as ppm including FID response to methanol (or methane, as appropriate) in the sample.

(C) C_{CH3OH} = Methanol concentration as ppm carbon.

$$= \frac{1.501 \times 10^{-3} \times T}{P_B \times V_E} \times \left[\left(C_{S1} \times AV_1\right) + \left(C_{S2} \times AV_2\right)\right]$$

(D) V_n = Net enclosure volume ft³ (m³) as determined by subtracting 50 ft³ (1.42 m³) (volume of vehicle with trunk and windows open) from the enclosure volume. A manufacturer may use the measured volume of the vehicle (instead of the nominal 50 ft³) with advance approval by the Administrator, provided the measured volume is determined and used for all vehicles tested by that manufacturer.

(E) r = FID response factor to methanol.

(F) P_B = Barometric pressure, in Hg (Kpa).

(G) T = Enclosure temperature, °R(°K).

(H) i = initial reading.

(I) f = final reading.

(J) 1 = First impinger.

(K) 2 = Second impinger.

(L) Assuming a hydrogen to carbon ratio of 2.3:

(*1*) k = 2.97; and

(*2*) For SI units, k = 17.16.

(M) $M_{HC,\ out}$ = mass of hydrocarbons exiting the enclosure, in the case of fixed-volume enclosures for diurnal emission testing, g.

(N) $M_{HC,\ in}$ = mass of hydrocarbons entering the enclosure, in the case of fixed-volume enclosures for diurnal emission testing, g.

(iii) For variable-volume enclosures, defined in § 86.107(a)(1)(i), the following simplified form of the hydrocarbon mass change equation may be used:

$$M_{HC} = \left(\frac{kP_B V_n \times 10^{-4}}{T} \right) \times \left[\left(C_{HC_f} - rC_{CH_3OH_f}\right) - \left(C_{HC_i} - rC_{CH_3OH_i}\right)\right]$$

(2) For running loss testing by the point-source method, the mass emissions of each test phase are calculated below, then summed for a total mass emission for the running loss test. If emissions are continuously sampled, the following equations can be used in integral form.

(i) Methanol emissions:

$$M_{CH_3OH} = \rho_{CH_3OH}\ V_{mix} \times \left(C_{CH_3OH,\ rl} - C_{CH_3OH,\ d}\right)$$

Where,

(A) M_{CH_3OH} = methanol mass change, μg.

(B) $\rho_{CH_3,OH}$ = 37.71 g/ft³, density of pure vapor at 68 °F.

(C) V_{mix} = total dilute sample volume, in ft³, calculated as appropriate for the collection technique used.

(D) $C_{CH_3OH,\ rl}$ = methanol concentration of diluted running loss sample, in ppm carbon equivalent.

(E) $C_{CH_3OH,\ d}$ = methanol concentration of dilution air, in ppm carbon equivalent.

(ii) Hydrocarbon emissions:

$M_{HC} = \rho_{HC}\ V_{mix} 10^{-6} \times (C_{HC,\ rl} - C_{HC,\ d})$

Where,

(A) M_{HC} = hydrocarbon mass change, g.

(B) ρ_{HC} = 16.88 g/ft^3, density of pure vapor at 68 °F (for hydrogen to carbon ratio of 2.3).

(C) V_{mix} = total dilute sample volume, in ft^3, calculated as appropriate for the collection technique used.

(D) $C_{HC,\ rl}$ = hydrocarbon concentration of diluted running loss sample, in ppm carbon equivalent.

(E) $C_{HC,\ d}$ = hydrocarbon concentration of dilution air, in ppm carbon equivalent.

(c) If the test fuel contains at least 25% oxygenated compounds by volume, measure the concentration of oxygenated compounds directly using a photoacoustic analyzer specified in 40 CFR 1065.269 or using impingers as described in 40 CFR 1065.805(f). Calculate total hydrocarbon equivalent emissions with the following equation, using density values specified in 40 CFR 1066.1005(f):

$$m_{\mathrm{THCE}} = m_{\mathrm{THC}} + \rho_{\mathrm{THC}} \cdot \sum_{i=1}^{N} \frac{m_{\mathrm{OHCi}}}{\rho_{\mathrm{OHCi}}} \cdot \left(1 - RF_{\mathrm{OHCi[THC\text{-}FID]}}\right)$$

Where:

m_{THCE} = the sum of the mass of THCE in the SHED.

m_{THC} = the mass of THC and all oxygenated hydrocarbons in the SHED, as measured by the FID. Calculate THC mass based on ρ_{THC}.

r_{THC} = the effective C_1-equivalent density of THC as specified in 40 CFR 1066.1005(f).

m_{OHCi} = the mass of oxygenated species *i* in the SHED.

r_{OHCi} = the C_1-equivalent density of oxygenated species *i*.

$RF_{OHCi[THC-FID]}$ = the response factor of a THC–FID to oxygenated species *i* relative to propane on a C_1-equivalent basis as determined in 40 CFR 1065.845.

(d)(1) For the full three-diurnal test sequence, there are two final results to report:

(i) The sum of the adjusted total mass emissions for the diurnal and hot soak tests (M_{DI} + M_{HS}); and

(ii) The adjusted total mass emissions for the running loss test, on a grams per mile basis = M_{RL}/D_{RL}, where D_{RL} = miles driven for the running loss test (see § 86.134–96(c)(6)).

(2) For the supplemental two-diurnal test sequence, there is one final result to report: the sum of the adjusted total mass emissions for the diurnal and hot soak tests (M_{DI} + M_{HS}), described in §§ 86.133–96(p) and 86.138–96(k), respectively.

[58 FR 16043, Mar. 24, 1993, as amended at 59 FR 48510, Sept. 21, 1994; 60 FR 34348, June 30, 1995; 60 FR 43897, Aug. 23, 1995; 79 FR 23698, Apr. 28, 2014; 81 FR 73979, Oct. 25, 2016]

§ 86.144–94 Calculations; exhaust emissions.

The final reported test results shall be computed by use of the following formula:

(a) For light-duty vehicles and light duty trucks:

$$Y_{wm} = 0.43\left(\frac{(Y_{ct} + Y_s)}{(D_{ct} + D_s)}\right) + 0.57\left(\frac{(Y_{ht} + Y_s)}{(D_{ht} + D_s)}\right)$$

Where:

(1) Y_{WM} = Weighted mass emissions of each pollutant, i.e., THC, CO, THCE, NMHC, NMHCE, CH_4, NO_X, or CO_2, in grams per vehicle mile.

(2) Y_{ct} = Mass emissions as calculated from the ''transient'' phase of the cold start test, in grams per test phase.

(3) Y_{ht} = Mass emissions as calculated from the ''transient'' phase of the hot start test, in grams per test phase.

(4) Y_s = Mass emissions as calculated from the ''stabilized'' phase of the cold start test, in grams per test phase.

(5) D_{ct} = The measured driving distance from the ''transient'' phase of the cold start test, in miles.

(6) D_{ht} = The measured distance from the ''transient'' phase of the hot start test, in miles.

(7) D_s = The measured driving distance from the ''stabilized'' phase of the cold start test, in miles.

(b) The mass of each pollutant for each phase of both the cold start test and the hot start test is determined from the following:

(1) Total hydrocarbon mass:

$$HC_{mass} = V_{mix} \times Density_{HC} \times (HC_{conc}/1{,}000{,}000)$$

(2) Oxides of nitrogen mass:

$$NOx_{mass} = V_{mix} \times Density_{NO2} \times K_H \times (NOx_{conc}/1{,}000{,}000)$$

(3) Carbon monoxide mass:

$$CO_{mass} = V_{mix} \times Density_{CO} \times (CO_{conc}/1{,}000{,}000)$$

(4) Carbon dioxide mass:

$$CO_{2mass} = V_{mix} \times Density_{CO2} \times (CO_{2conc}/100)$$

(5) Methanol mass:

$$CH_3OH_{mass} = V_{mix} \times Density_{CH}3OH \times (CH_3OH_{conc}/1{,}000{,}000)$$

(6) Formaldehyde mass:

$$HCHO_{mass} = V_{mix} \times Density_{HCHO} \times (HCHO_{conc}/1{,}000{,}000)$$

(7) Total hydrocarbon equivalent mass:

$$THCE_{mass} = HC_{mass} + 13.8756/32.042 \times (CH_3OH_{mass}) + 13.8756/32.0262 \times (HCHO_{mass})$$

(8) Non-methane hydrocarbon mass:

$$NMHC_{mass} = V_{mix} \times Density_{NMHC} \times (NMHC_{conc}/1{,}000{,}000)$$

(9) Non-methane hydrocarbon equivalent mass:

$$NMHCE_{mass} = NMHC_{mass} + 13.8756/32.042 \times (CH_3OH_{mass}) + 13.8756/30.0262 \times (HCHO_{mass})$$

(10) Methane mass:

$$CH_{4mass} = V_{mix} = Density_{CH4} = (CH_{4conc}/1{,}000{,}00)$$

(11) Nitrous Oxide Mass:

$$V_{mix} \times Density_{N2O} \times (N_2O_{conc}/1{,}000{,}000)$$

(c) Meaning of symbols:

(1)(i) HC_{mass} = Total hydrocarbon emissions, in grams per test phase.

(ii) $Density_{HC}$ = Density of total hydrocarbon.

(A) *For gasoline-fuel, diesel-fuel and methanol fuel;* $Density_{HC}$ = 16.33 g/ft^3 – carbon atom (0.5768 kg/m^3 – carbon atom), assuming an average carbon to hydrogen ratio of 1:1.85, at 68 °F (20 °C) and 760 mm Hg (101.3 kPa) pressure.

(B) *For natural gas and liquefied petroleum gas-fuel;* $Density_{HC}$ = 1.1771 (12.011 + H/C (1.008)) g/ft^3 – carbon atom (0.04157(12.011 + H/C (1.008))kg/m^3 – carbon atom), where H/C is the hydrogen to carbon ratio of the hydrocarbon components of the test fuel, at 68 °F (20 °C) and 760 mm Hg (101.3 kPa) pressure.

(iii)(A) HC_{conc} = Total hydrocarbon concentration of the dilute exhaust sample corrected for background, in ppm carbon equivalent, i.e., equivalent propane × 3.

(B) $HC_{conc} = HC_e - HC_d(1 - 1/DF)$.

Where:

(iv)(A) HC_e = Total hydrocarbon concentration of the dilute exhaust sample or, for diesel-cycle (or methanol-fueled vehicles, if selected), average hydrocarbon concentration of the dilute exhaust sample as calculated from the integrated THC traces, in ppm carbon equivalent.

(B) HC_e = FID $HC_e - (r)C_{CH}3OHe$.

(v) FID HC_e = Concentration of total hydrocarbon plus methanol in dilute exhaust as measured by the FID, ppm carbon equivalent.

(vi) r = FID response to methanol.

(vii) $C_{CH}3OHe$ = Concentration of methanol in dilute exhaust as determined from the dilute exhaust methanol sample in ppm carbon. For vehicles not fueled with methanol, $C_{CH}3OHe$ equals zero.

(viii)(A) HC_d = Total hydrocarbon concentration of the dilution air as measured, in ppm carbon equivalent.

(B) HC_d = FID $HC_d - (r)C_{CH}3OHd$.

(ix) FID HC_d = Concentration of total hydrocarbon plus methanol in dilution air as measured by the FID, ppm carbon equivalent.

(x) $C_{CH}3OHd$ = Concentration of methanol in dilution air as determined from dilution air methanol sample in ppm

carbon. For vehicles not fueled with methanol, C_{CH^3OHd} equals zero.

(2)(i) NOx_{mass} = Oxides of nitrogen emissions, in grams per test phase.

(ii) $Density_{NO2}$ = Density of oxides of nitrogen is 54.16 g/ft3 (1.913 kg/m^3) assuming they are in the form of nitrogen dioxide, at 68 °F (20 °C) and 760 mm Hg (101.3kPa) pressure.

(iii)(A) NOx_{conc} = Oxides of nitrogen concentration of the dilute exhaust sample corrected for background, in ppm.

(B) $NOx_{conc} = NOx_e - NOx_d(1-(1/DF))$.

Where:

(iv) NOx_e = Oxides of nitrogen concentration of the dilute exhaust sample as measured, in ppm.

(v) NOx_d = Oxides of nitrogen concentration of the dilution air as measured, in ppm.

(3)(i) CO_{mass} = Carbon monoxide emissions, in grams per test phase.

(ii) $Density_{CO}$ = Density of carbon monoxide is 32.97 g/ft^3 (1.164 kg/m3), at 68 °F (20 °C) and 760 mm Hg (101.3 kPa) pressure.

(iii)(A) CO_{conc} = Carbon monoxide concentration of the dilute exhaust sample corrected for background, water vapor, and CO_2 extraction, in ppm.

(B) $CO_{conc} = CO_e - CO_d(1 - (1/DF))$.

Where:

(iv)(A) CO_e = Carbon monoxide concentration of the dilute exhaust volume corrected for water vapor and carbon dioxide extraction, in ppm.

(B) $CO_e = (1 - 0.01925CO_{2e} - 0.000323R)CO_{em}$ for petroleum fuel with hydrogen to carbon ratio of 1.85:1.

(C) $CO_e = [1-(0.01 + 0.005HCR)CO_{2e} - 0.000323R]CO_{em}$ for methanol-fuel or natural gas-fuel or liquefied petroleum gas-fuel, where HCR is hydrogen-to-carbon ratio as measured for the fuel used.

(v) CO_{em} = Carbon monoxide concentration of the dilute exhaust sample as measured, in ppm.

(vi) CO_{2e} = Carbon dioxide concentration of the dilute exhaust sample, in percent.

(vii) R = Relative humidity of the dilution air, in percent (see § 86.142(n)).

(viii)(A) CO_d = Carbon monoxide concentration of the dilution air corrected for water vapor extraction, in ppm.

(B) $CO_d = (1–0.000323R)CO_{dm}$.

Where:

(ix) CO_{dm} = Carbon monoxide concentration of the dilution air sample as measured, in ppm.

NOTE: If a CO instrument which meets the criteria specified in § 86.111 is used and the conditioning column has been deleted, CO_{em} must be substituted directly for CO_e and CO_{dm} must be substituted directly for CO_d.

(4)(i) CO_{2mass} = Carbon dioxide emissions, in grams per test phase.

(ii) Density CO_2 = Density of carbon dioxide is 51.81 g/ft^3 (1.830 kg/m^3), at 68 °F (20 °C) and 760 mm Hg (101.3 kPa) pressure.

(iii)(A) CO_{2conc} = Carbon dioxide concentration of the dilute exhaust sample corrected for background, in percent.

(B) $CO_{2conc} = CO_{2e} - CO_{2d}(1 - (1/DF))$.

Where:

(iv) CO_{2d} = Carbon dioxide concentration of the dilution air as measured, in percent.

(5)(i) CH_3OH_{mass} = Methanol emissions corrected for background, in grams per test phase.

(ii) $Density_{CH3OH}$ = Density of methanol is 37.71 g/ft^3-carbon atom (1.332 kg/m^3-carbon atom), at 68 °F (20 °C) and 760 mm Hg (101.3 kPa) pressure.

(iii)(A) CH_3OH_{conc} = Methanol concentration of the dilute exhaust corrected for background, ppm.

(B) $CH_3OH_{conc} = C_{CH3OHe} - C_{CH3OHd}(1 - (1/DF))$.

Where:

(iv)(A) C_{CH3OHe} = Methanol concentration in the dilute exhaust, ppm.

(B)

$$C_{CH3OHe} = \frac{3.813\times10^{-2}\times T_{EM}\left[\left(C_{S1}\times AV_{S1}\right)+\left(C_{S2}\times AV_{S2}\right)\right]}{P_B\times V_{EM}}$$

(v)(A) C_{CH3OHd} = Methanol concentration in the dilution air, ppm.

(B)

$$C_{CH3OHd} = \frac{3.813 \times 10^{-2} \times T_{DM}\left[\left(C_{D1} \times AV_{D1}\right) + \left(C_{D2} \times AV_{D2}\right)\right]}{P_B \times V_{DM}}$$

(vi) T_{EM} = Temperature of methanol sample withdrawn from dilute exhaust, °R.

(vii) T_{DM} = Temperature of methanol sample withdrawn from dilution air, °R.

(viii) P_B = Barometric pressure during test, mm Hg.

(ix) V_{EM} = Volume of methanol sample withdrawn from dilute exhaust, ft^3.

(x) V_{DM} = Volume of methanol sample withdrawn from dilution air, ft^3.

(xi) C_S = GC concentration of sample drawn from dilute exhaust, µg/ml.

(xii) C_D = GC concentration of sample drawn from dilution air, µg/ml.

(xiii) AVS = Volume of absorbing reagent (deionized water) in impinger through which methanol sample from dilute exhaust is drawn, ml.

(xiv) AVD = Volume of absorbing reagent (deionized water) in impinger through which methanol sample from dilution air is drawn, ml.

(xv) 1 = first impinger.

(xvi) 2 = second impinger.

(xvii) 1 = first impinger.

(xviii) 2 = second impinger.

(6)(i) $HCHO_{mass}$ = Formaldehyde emissions corrected for background, in grams per test phase.

(ii) $Density_{HCHO}$ = Density of formaldehyde is 35.36 g/ft^3- carbon atom (1.249 kg/m^3-carbon atom), at 68 °F (20 °C) and 760 mm Hg (101.3 kPa) pressure.

(iii)(A) $HCHO_{conc}$ = Formaldehyde concentration of the dilute exhaust corrected for background, in ppm.

(B) $HCHO_{conc} = C_{HCHOe} - C_{HCHOd}$ (1 − (1/DF)).

Where:

(iv)(A) C_{HCHOe} = Formaldehyde concentration in dilute exhaust, in ppm.

(B)

$$C_{HCHOe} = \frac{4.069 \times 10^{-2} \times C_{FDE} \times V_{AE} \times Q \times T_{EF}}{V_{SE} \times P_B}$$

(v)(A) C_{HCHOd} = Formaldehyde concentration in dilution air in ppm.

(B)

$$C_{HCHOd} = \frac{4.069 \times 10^{-2} \times C_{FDA} \times V_{AA} \times Q \times T_{DF}}{V_{SA} \times P_B}$$

(vi) C_{FDE} = Concentration of DNPH derivative of formaldehyde from dilute exhaust sample in sampling solution, µg/ml.

(vii) V_{AE} = Volume of sampling solution for dilute exhaust formaldehyde sample, ml.

(viii)(A) Q = Ratio of molecular weights of formaldehyde to its DNPH derivative.

(B) Q = 0.1429.

(ix) T_{EF} = Temperature of formaldehyde sample withdrawn from dilute exhaust, °R.

(x) V_{SE} = Volume of formaldehyde sample withdrawn from dilute exhaust, ft^3.

(xi) P_B = Barometric pressure during test, mm Hg.

(xii) C_{FDA} = Concentration of DNPH derivative of formaldehyde from dilution air sample in sampling solution, µg/ml.

(xiii) V_{AA} = Volume of sampling solution for dilution air formaldehyde sample, ml.

(xiv) T_{DF} = Temperature of formaldehyde sample withdrawn from dilution air, °R.

(xv) V_{SA} = Volume of formaldehyde sample withdrawn from dilution air, ft^3.

(7)(i) DF = 13.4/[CO_{2e} + (HC_e + CO_e) 10^{-4}] for petroleum-fueled vehicles.

(ii) For methanol-fueled vehicles, where fuel composition is $C_XH_yO_z$ as measured, or calculated, for the fuel used:

$$DF = \frac{100 \cdot \left(\frac{X}{x + y/2 + 3.76 \cdot \left(x + y/4 - z/2 \right)} \right)}{CO_{2e} + \left(HC_e + CO_e + C_{CH_3OH_e} + C_{HCHO_e} \right) \cdot 10^{-4}}$$

(iii)

$$DF = \frac{100 \times \frac{x}{x + y/2 + 3.76(x + y/4)}}{CO_{2e} + \left(NMHC_e + CH_{4e} + CO_e \right) \times 10^{-4}}$$

for natural gas-fueled or liquefied petroleum gas-fueled vehicles where fuel composition is C_x H_y as measured for the fuel used.

(iv)(A) K_H = Humidity correction factor.

(B) $K_H = 1/[1 - 0.0047(H - 75)]$.

(C) *For SI units,* $K_H = 1 \times [1–0.0329(H \times 10.71)]$.

Where:

(v)(A) H = Absolute humidity in grains (grams) of water per pound (kilogram) of dry air.

(B) $H=[(43.478)R_a \times P_d]/[P_B - (P_d \times R_a/100)]$.

(C) *For SI units,* $H=[(6.211)R_a \times P_d]/[P_B \times (P_d \times R_a/100)]$.

(vi) R_a = Relative humidity of the ambient air, percent.

(vii) P_d = Saturated vapor pressure, mm Hg (kPa) at the ambient dry bulb temperature.

(viii) P_B = Barometric pressure, mm Hg (kPa).

(ix)(A) V_{mix} = Total dilute exhaust volume in cubic feet per test phase corrected to standard conditions (528°R (293 °K) and 760 mm Hg (101.3 kPa)).

(B) For PDP-CVS, V_{mix} is:

$$V_{mix} = \frac{V_O \times N \times \left(P_B - P_4 \right) \times 528}{760 \times T_P}$$

(C) *For SI units,*

$$V_{mix} = \frac{V_o \times N \times \left(P_B - P_4 \right) \times 293}{101.3 \times T_p}$$

Where:

(x) V_o = Volume of gas pumped by the positive displacement pump, in cubic feet (m^3) per revolution. This volume is dependent on the pressure differential across the positive displacement pump.

(xi) N = Number of revolutions of the positive displacement pump during the test phase while samples are being collected.

(xii) P_B = Barometric pressure, mm Hg (kPa).

(xiii) P_4 = Pressure depression below atmospheric measured at the inlet to the positive displacement pump, in mm Hg (kPa) (during an idle mode).

(xiv) T_p = Average temperature of dilute exhaust entering positive displacement pump during test, °R(°K).

(8)(i) $NMHC_{conc} = HC_{conc} - (r_{CH4} \times CH_{4conc})$.

(ii) $Density_{NMHC}$ = The density of nonmethane hydrocarbon.

(A) *For gasoline-fuel and diesel-fuel;* $Density_{NMHC}$ = 16.33 g/ft^3-carbon atom (0.5768 kg/m^3-carbon atom), assuming an average carbon to hydrogen ratio of 1:1.85 at 68 °F (20 °C) and 760 mm Hg (101.3 kPa) pressure.

(B) For natural gas and liquefied petroleum gas fuel; $Density_{NMHC}$ = 1.1771(12.011 + H/C(1.008))g/ft^3-carbon atom (0.04157(12.011 + H/C(1.008))kg/m^3-

carbon atom), where H/C is the hydrogen to carbon ratio of the non-methane hydrocarbon components of the test fuel, at 68 °F (20 °C) and 760 mm Hg (101.3 kPa) pressure.

(iii)(A) CH_{4conc} = Methane concentration of the dilute exhaust sample corrected for background, in ppm carbon equivalent.

(B) $CH_{4conc} = CH_{4e} - CH_{4d}(1 - 1/DF)$

Where:

(iv) CH_{4e} = Methane exhaust bag concentration in ppm carbon equivalent.

(v) CH_{4d} = Methane concentration of the dilution air in ppm carbon equivalent.

(vi) rCH4 = HC FID response to methane as measured in § 86.121(d).

(9)(i) CH_{4mass} = Methane emissions, in grams per test phase.

(ii) $Density_{CH4}$ = Density of methane is 18.89 g/ft^3-carbon atom (0.6672 kg/m^3-carbon atom), at 68 °F (20 °C) and 760 mm Hg (101.3 kPa) pressure.

(10)(i) N_2O_{mass} = Nitrous oxide emissions, in grams per test phase.

(ii) $Density_{N2O}$ = Density of nitrous oxide is 51.81 g/ft^3 (1.83 kg/m^3), at 68 °F (20 °C) and 760 mm Hg (101.3kPa) pressure.

(iii)(A) N_2O_{conc} = Nitrous oxide concentration of the dilute exhaust sample corrected for background, in ppm.

(B) $N_2O_{conc} = N_2O_e - N_2O_d(1 - (1/DF))$.

Where:

N_2O_e = Nitrous oxide concentration of the dilute exhaust sample as measured, in ppm.

N_2O_d = Nitrous oxide concentration of the dilution air as measured, in ppm.

(d) For petroleum-fueled vehicles, example calculation of mass values of exhaust emissions using positive displacement pump:

(1) For the ''transient'' phase of the cold start test assume the following: V_o = 0.29344 ft^{3}rev; N = 10,485; R = 48.0 pct; R_a = 48.2 percent; P_B = 762 mm Hg; P_d = 22.225 mm Hg; P_4 = 70 mm Hg; T_p = 570 °R; HC_e = 105.8 ppm, carbon equivalent; NOx_e = 11.2 ppm; CO_{em} = 306.6 ppm; CO_{2e} = 1.43 percent; CH_{4e} = 10.74 ppm; HC_d = 12.1 ppm; NOx_d = 0.8 ppm; CO_{dm} = 15.3 ppm; CO_{2d} = 0.032 percent; CH_{4d} = 2.20 ppm; D_{ct} = 3.598 miles.

Then:

(i) V_{mix} = (0.29344)(10,485)(762-70)(528)/(760)(570) = 2595.0 ft^3 per test phase.

(ii) H = (43.478)(48.2)(22.225)/762 − (22.225)(48.2/100) = 62 grains of water per pound of dry air.

(iii) K_H = 1/[1 − 0.0047(62-75)] = 0.9424.

(iv) CO_e = [1-0.01925(1.43) − 0.000323(48)](306.6) = 293.4 ppm.

(v) CO_d = [1 − 0.000323(48)](15.3) = 15.1 ppm.

(vi) DF = 13.4/[1.43 + 10^{-4}(105.8 + 293.4)] = 9.116.

(vii) HC_{conc} = 105.8-12.1(1 − 1/9.116) = 95.03 ppm.

(viii) HC_{mass} = (2595)(16.33)(95.03/1,000,000) = 4.027 grams per test phase.

(ix) NOx_{conc} = 11.2 − 0.8(1 − 1/9.116) = 10.49 ppm.

(x) NOx_{mass} = (2595)(54.16)(10.49/1,000,000)(0.9424) = 1.389 grams per test phase.

(xi) CO_{conc} = 293.4 − 15.1(1 − 1/9.116) = 280.0 ppm.

(xii) CO_{mass} = (2595)(32.97)(280/1,000,000) = 23.96 grams per test phase.

(xiii) CO_{2conc} = 1.43 − 0.032(1 − 1/9.116) = 1.402 percent.

(xiv) CO_{2mass} = (2595.0)(51.85)(1.402/100) = 1886 grams per test phase.

(xv) CH_{4conc} = 10.74 − 2.2 (1 − 1/9.116) = 8.78 ppm.

(xvi) $NMHC_{conc}$ = 95.03 − 8.78 = 86.25 ppm.

(xvii) $NMHC_{mass}$ = (2595)(16.33)(86.25)/1,000,000 = 3.655 grams per test phase.

(2) For the stabilized portion of the cold start test assume that similar calculations resulted in the following:

(i) HC_{mass} = 0.62 gram per test phase.

(ii) NOx_{mass} = 1.27 grams per test phase.

(iii) CO_{mass} = 5.98 grams per test phase.

(iv) CO_{2mass} = 2346 grams per test phase.

(v) D_s = 3.902 miles.

(vi) $NMHC_{mass}$ = 0.50 gram per test phase.

(3) For the ''transient'' portion of the hot start test assume that similar calculations resulted in the following:

(i) HC_{mass} = 0.51 gram per test phase.

(ii) NOx_{mass} = 1.38 grams per test phase.

(iii) CO_{mass} = 5.01 grams per test phase.

(iv) CO_{2mass} = 1758 grams per test phase.

(v) D_{ht} = 3.598 miles.

(vi) $NMHC_{mass}$ = 0.44 grams per test phase.

(4) Weighted mass emission results:

(i) HC_{wm} = 0.43[(4.027 + 0.62)/(3.598 + 3.902)] + 0.57[(0.51 + 0.62)/(3.598 + 3.902)] = 0.352 gram per vehicle mile.

(ii) NOx_{wm} = 0.43[(1.389 + 1.27)/(3.598 + 3.902)] + 0.57[(1.38 + 1.27)/(3.598 + 3.902)] = 0.354 gram per vehicle mile.

(iii) CO_{wm} = 0.43[(23.96 + 5.98)/(3.598 + 3.902)] + 0.57[(5.01 + 5.98)/(3.598 + 3.902)] = 2.55 grams per vehicle mile.

(iv) CO_{2wm} = 0.43[(1886 + 2346)/(3.598 + 3.902) + 0.57[(1758 + 2346)/(3.598 + 3.902)] = 555 gram per vehicle mile.

(v) $NMHC_{wm}$ = 0.43[(3.655 + 0.50)/(3.598 + 3.902)] + 0.57[(0.44 + 0.50)/(3.598 + 3.902)] = 0.310 gram per vehicle mile.

(e) For methanol-fueled vehicles with measured fuel composition of $CH_{3.487}O_{0.763}$, example calculation of exhaust emissions using positive displacement pump:

(1) For the ''transient'' phase of the cold start test assume the following: V_0 = 0.29344 ft³ rev; N = 25,801; R = 37.5 pct; Ra = 37.5 percent; P_B = 725.42 mm Hg; P_d = 22.02 mm Hg; P_4 = 70 mm Hg; T_p 570 deg.R; FID HC_e = 14.65 ppm, carbon equivalent; r = 0.788; T_{EM} = 527.67 deg.R; V_{EM} = 0.2818 ft³; C_{S1} = 7.101; AV_{S1} = 15.0 ml; C_{S2} = 0.256; AV_{S2} = 15.0 ml; T_{DM} = 527.67 deg.R; V_{DM} = 1.1389 ft³; C_{D1} = 0.439; AV_{D1} = 15.0 ml; C_{D2} = 0.0; AV_{D2} = 15.0 ml; C_{FDE} = 8.970 µg/ml; V_{AE} = 5.0 ml; Q = 0.1429; T_{EF} = 527.67 deg.R; V_{SE} = 0.2857 ft³; C_{FDA} = 0.39 µg/ml; V_{AA} = 5.0 ml; T_{DF} = 527.67 deg.R; V_{SA} = 1.1043 ft³; NO_X. = 5.273 ppm; CO_{em} = 98.8 ppm; CO_{2e} = 0.469 pct; CH_{4e} = 2.825 ppm; FID HC_d = 2.771 ppm; NO_X. = 0.146 ppm; CO_{dm} = 1.195 ppm; CO_{2d} = 0.039 percent; CH_{4d} = 2.019 ppm; Dct = 3.583 miles.

Then:

(i) V_{mix} = (0.29344)(25,801)(725.42–70)(528)/(760)(570) = 6048.1.0 ft³ per test phase.

(ii) H = (43.478)(37.5)(22.02)/[725.42-(22.02 × 37.5/100)] = 50 grains of water per pound of dry air.

(iii) K_H = 1/[1 − 0.0047(50 − 75)] = 0.8951.

(iv) CO_e = [1-(0.01 + 0.005 × 3.487) × 0.469) − 0.000323(37.5)) × 98.8 = 96.332 ppm.

(v) CO_d = (1 − 0.000323(37.5)) × 1.195 = 1.181 ppm.

(vi) C_{CH3OHe} = (3.813 × 10^{-2})(527.67)[(7.101)(15.0) + (0.256)(15.0)]/(725.42)(0.2818) = 10.86 ppm.

(vii) HCe = 14.65 − (0.788)(10.86) = 6.092.

(viii) DF = 100(1/[1 + (3.487/2) + 3.76(1 + (3.487/4) − (0.763/2))])/0.469 + (6.092 + 96.332 + 10.86 + 0.664)(10^{-4}) = 24.939.

(ix) C_{CH3OHd} = (3.813 × 10^{-2})(527.67)[(0.439)(15.0) + (0.0)(15.0)]/(725.42)(1.1389) = 0.16 ppm.

(x) CH_3OH_{conc} = 10.86 − 0.16(1–1/24.939) = 10.71 ppm.

(xi) CH_3OH_{mass} = 6048.1 × 37.71 × (10.71/1,000,000) = 2.44 grams per test phase.

(xii) HC_{conc} = [14.65 − (0.788)(10.86)] − [2.771 − (0.788)(0.16)] (1–1/24.94) = 3.553 ppm.

(xiii) HC_{mass} = (6048.1)(16.33)(3.553/1,000,000) = 0.35 grams per test phase.

(xiv) C_{HCHOe} = 4.069 × 10^{-2}(8.970)(5.0)(0.1429)(527.67)/(0.2857)(725.42) = 0.664 ppm.

(xv) C_{HCHOd} = 4.069 × 10^{-2}(0.39)(5.0)(0.1429)(527.67)/(1.1043)(725.42) = 0.0075 ppm.

(xvi) $HCHO_{conc}$ = 0.664–0.0075(1–1/24.939) = 0.6568 ppm.

(xvii) $HCHO_{mass}$ = (6048.1)(35.36)(0.6568/1,000,000) = 0.1405 grams per test phase.

(xviii) THCE = 0.35 + (13.8756/32.042)(2.44) + (13.8756/ 30.0262)(0.1405) = 1.47 grams per test phase.

(xix) NO_{Xconc} = 5.273 − (0.146)(1–1/24.939) = 5.13 ppm.

(xx) NO_{Xmass} = (6048.1)(54.16)(5.13/1,000,000)(0.8951) = 1.505 grams per test phase.

(xxi) CO_{conc} = 96.332 − 1.181(1–1/24.939) = 95.2 ppm.

(xxii) CO_{mass} = (6048.1)(32.97)(95.2/1,000,000) = 18.98 grams per test phase.

(xxiii) $CO2_{conc}$ = 0.469–0.039(1–1/24.939) = 0.432 percent.

(xxiv) $CO2_{mass}$ = (6048.1)(51.85)(0.432/100) = 1353 grams.

(xxv) $CH4_{conc}$ = 2.825–2.019(1–1/24.939) = 0.89 ppm.

(xxvi) $NMHC_{conc}$ = 3.553 ppm − 0.89 ppm = 2.67 ppm.

(xxvii) $NMHC_{mass}$ = (6048.1)(16.33)(2.67/1,000,000) = 0.263 grams per test phase.

(xxviii) $NMHCE_{mass}$ = 0.263 + (13.8756/32.042)(2.44) + (13.8756/ 30.0262)(0.1405) = 1.39 grams per test phase.

(2) For the stabilized portion of the cold start test assume that similar calculations resulted in the following:

(i) THCE = 0.143 grams per test phase.

(ii) NO_{Xmass} = 0.979 grams per test phase.

(iii) CO_{mass} = 0.365 grams per test phase.

(iv) CO_{2mass} = 1467 grams per test phase.

(v) D_s = 3.854 miles.

(vi) NMHCE = 0.113 grams per test phase.

(3) For the ''transient'' portion of the hot start test assume that similar calculations resulted in the following:

(i) THCE = 0.488 grams as carbon equivalent per test phase.

(ii) NO_{Xmass} = 1.505 grams per test phase.

(iii) CO_{mass} = 3.696 grams per test phase.

(iv) CO_{2mass} = 1179 grams per test phase.

(v) D_{ht} = 3.577 miles.

(vi) NMHCE = 0.426 grams per test phase.

(4) Weighted emission results:

(i) $THCE_{wm}$ = (0.43) × (1.473 + 0.143)/(3.583 + 3.854) + (0.57) × (0.488 + 0.143)/(3.577 + 3.854) = 0.142 grams as carbon equivalent per mile.

(ii) NOx_{wm} = (0.43) × (1.505 + 0.979)/(3.583 + 3.854) + (0.57) × (1.505 + 0.979)/3.577 + 3.854) = 0.344 grams per mile.

(iii) CO_{wm} = (0.43) × (18.983 + 0.365)/(3.583 = 3.854) + (0.57) × (3.696 + 0.365)/(3.577 + 3.854) = 1.43 grams per mile.

(iv) $CO2_{wm}$ = (0.43) × (1353 + 1467)/(3.583 + 3.854) + (0.57) × (1179 + 1467)/(3.577 + 3.854) = 366 grams per mile.

(v) $NMHCE_{wm}$ = (0.43) × (1.386 + 0.113)/(3.583 + 3.854) + (0.57) × (0.426 = 0.113)/(3.577 + 3.854) = 0.128 grams per mile.

[56 FR 25777, June 5, 1991, as amended at 59 FR 39649, Aug. 3, 1994; 59 FR 48511, Sept. 21, 1994; 60 FR 34349, June 30, 1995; 62 FR 47122, Sept. 5, 1997; 70 FR 40434, July 13, 2005; 75 FR 22980, Apr. 30, 2010; 76 FR 57377, Sept. 15, 2011]

§ 86.145–82 Calculations; particulate emissions.

(a) The final reported test results for the mass particulate (M_p) in grams/mile shall be computed as follows.

$$M_p = 0.43(M_{p1} + M_{p2})/(D_{ct} + D_s) + 0.57(M_{p3} + M_{p2})/(D_{ht} = D_s)$$

where:

(1) M_{p1} = Mass of particulate determined from the ''transient'' phase of the cold start test, in grams per test phase. (See § 86.110–82(c)(1) for determination.)

(2) M_{p2} = Mass of particulate determined from the ''stabilized'' phase of the cold start test, in grams per test phase. (See § 86.110–82(c)(1) for determination.)

(3) M_{p3} = Mass of particulate determined from the ''transient'' phase of the hot start test, in grams per test phase. (See § 86.110–82(c)(1) for determination).

(4) D_{ct} = The measured driving distance from the ''transient'' phase of the cold start test, in miles.

(5) D_s = The measured driving distance from the ''stabilized'' phase of the cold start test, in miles.

(6) D_{ht} = The measured driving distance from the ''transient'' phase of the hot start test, in miles.

(b) The mass of particulate for each phase of testing is determined as follows:

$$M_{pj} = \left[V_{mix} + V_{epi}\right]\left[\frac{P_{ei}}{V_{epi}} - \frac{P_b}{V_{bp}}(1 - 1/DF)\right]$$

where:

(1) j = 1, 2 or 3 depending on which phase the mass of particulate is being determined for (i.e., the ''transient'' phase of the cold start test, the ''stabilized'' phase of the cold start test, or the ''transient'' phase of the hot start test).

(2) V_{mix} = Total dilute exhaust volume in cubic meters per test, corrected to standard conditions 528°R (293K) and 29.92 in Hg (101.3 kPa). V_{mix} is further defined in § 86.144.

(3) P_e = mass of particulate per test on the exhaust filter(s), grams.

(4) P_b = mass of particulate on the ''background'' filter, grams.

(i) The background particulate level, P_b, inside the dilution air filter box at EPA is very low. P_b will be assumed = 0, and background particulate samples will not be taken with each exhaust sample. It is recommended that background particulate checks be made periodically to verify the low level.

(ii) Any manufacturer may make the same assumption without prior EPA approval.

(iii) If P_b is assumed = 0, then no background correction is made. The equation for particulate mass emissions then reduces to:

$$M_{pj} = \frac{V_{mix_i} + V_{ep_i} \times P_{e_i}}{V_{ep_i}}$$

(6) V_{ep} = total volume of sample pulled through the filter, cubic feet at standard conditions.

$$V_{ep} = \frac{V_{ap} \times \left(P_{bar} + P_{ip}\right) \times 528}{T_{ip} \times 29.92}$$

where:

(i) V_{ap} = corrected (according to procedure specified in § 85.120) dilute exhaust sample volume, cubic feet.

(ii) P_{bar} = barometric pressure, in Hg.

(iii) P_{ip} = pressure elevation above ambient measured at the inlet to the dilute exhaust sample gas meter or flow instrument, in Hg. (For most gas meters with unrestricted discharge P_{ip} is negligible and can be assumed = 0.)

(iv) T_{ip} = average temperature of the dilute exhaust sample at the inlet to the gas meter or flow instrument, °R.

(7) V_{bp} = total volume of the background sample, cubic feet at standard conditions. (V_{bp} is not required if P_b is assumed = 0.) It is calculated using the following formula:

$$V_{bp} = \frac{V_{ap} \times \left(P_{bar} + P_{ib}\right) \times 528}{T_{ib} \times 29.92}$$

where:

(i) V_{ab} = corrected (according to procedure specified in § 85.120) background sample volume, cubic feet.

(ii) P_{bar} = barometric pressure, in. Hg.

(iii) P_{ib} = pressure elevation above ambient measured at the inlet to the background gas meter or flow instrument, in Hg. (For most gas meters with unrestricted discharge P_{ib} is negligible and can be assumed = 0.)

(iv) T_{ib} = average temperature of the background sample at the inlet to the gas meter or flow instrument, °R.

(8) DF = dilution factor. (DF is not required if P_b is assumed = 0.)

[45 FR 14523, Mar. 5, 1980, as amended at 46 FR 50494, Oct. 13, 1981, and 47 FR 49807, Nov. 2, 1982]

§ 86.146–96 Fuel dispensing spitback procedure.

(a) The vehicle is fueled at a rate of 10 gal/min to test for fuel spitback emissions. All liquid fuel spitback emissions that occur during the test are collected in a bag made of a material impermeable to hydrocarbons or methanol. The bag shall be designed and used so that liquid fuel does not spit back onto the vehicle body, adjacent floor, etc., and it must not impede the free flow of displaced gasoline vapor from the orifice of the filler pipe. The bag must be designed to permit passage of the dispensing nozzle through the bag. If the bag has been used for previous testing, sufficient time shall be allowed for the bag to dry out. The dispensing nozzle shall be a commercial model, not equipped with vapor recovery hardware.

(b) Ambient temperature levels encountered by the test vehicle shall be not less than 68 °F nor more than 86 °F. The temperatures monitored during testing must be representative of those experienced by the test vehicle. The vehicle shall be approximately level during all phases of the test sequence to prevent abnormal fuel distribution.

(c) Measure and record the mass of the bag to be used for collecting spitback emissions to the nearest 0.01 gram.

(d) Drain the fuel tank(s) and fill with test fuel, as specified in § 86.113, to 10 percent of the reported nominal fuel tank capacity. The fuel cap(s) shall be installed immediately after refueling.

(e) The vehicle shall be soaked at 80±6 °F (27±3 °C) for a minimum of six hours, then placed, either by being driven or pushed, on a dynamometer and operated through one Urban Dynamometer Driving Schedule (specified in § 86.115 and appendix I of this part). The test vehicle may not be used to set dynamometer horsepower.

(f) Following the preconditioning drive, the vehicle shall be moved or driven at minimum throttle to the refueling area.

(g) All areas in proximity to the vehicle fuel fill orifice and the dispenser nozzle itself shall be completely dry of liquid fuel.

(h) The fuel filler neck shall be snugly fitted with the vented bag to capture

any fuel emissions. The fuel nozzle shall be inserted through the bag into the filler neck of the test vehicle to its maximum penetration. The plane of the nozzle's handle shall be perpendicular to the floor of the laboratory.

(i) The fueling procedure consists of dispensing fuel through a nozzle, interrupted by a series of automatic shutoffs. A minimum of 3 seconds shall elapse between any automatic shutoff and subsequent resumption of dispensing. Dispensing may not be manually terminated, unless the test vehicle has already clearly failed the test. The vehicle shall be fueled according to the following procedure:

(1) The fueling operation shall be started within 4 minutes after the vehicle is turned off and within 8 minutes after completion of the preconditioning drive. The average temperature of the dispensed fuel shall be 65 ±5 °F (18 ±3 °C).

(2) The fuel shall be dispensed at a rate of 9.8±0.3 gallons/minute (37.1±1.1 L/min) until the automatic shutoff is activated.

(3) If the automatic shutoff is activated before the nozzle has dispensed an amount of fuel equal to 70 percent of the tank's nominal capacity, the dispensing may be resumed at a reduced rate. Repeat as necessary until the nozzle has dispensed an amount of fuel equal to at least 70 percent of the tank's nominal capacity.

(4) Once the automatic shutoff is activated after the nozzle has dispensed an amount of fuel equal to 70 percent of the tank's nominal capacity, the fuel shall be dispensed at a rate of 5 ±1 gallons/minute (19 ±4 ℓ/min) for all subsequent dispensing. Dispensing shall be restarted two additional times.

(5) If the nozzle has dispensed an amount of fuel less than 85 percent of the tank's nominal capacity after the two additional dispensing restarts, dispensing shall be resumed, and shall continue through as many automatic shutoffs as necessary to achieve this level. This completes the fueling procedure.

(j) Withdraw the nozzle from the vehicle and the bag, holding the tip of the nozzle upward to avoid any dripping into the bag.

(k) Within 1 minute after completion of the fueling event, the bag shall be folded to minimize the vapor volume inside the bag. The bag shall be folded as quickly as possible to prevent evaporation of collected emissions.

(l) Within 5 minutes after completion of the fueling event, the mass of the bag and its contents shall be measured and recorded (consistent with paragraph (c) of this section). The bag shall be weighed as quickly as possible to prevent evaporation of collected emissions.

[58 FR 16045, Mar. 24, 1993, as amended at 60 FR 43898, Aug. 23, 1995]

§ 86.150–98 Refueling test procedure; overview.

(a) The refueling emissions test procedure described in this and subsequent sections is used to determine the conformity of vehicles with the refueling emissions standards set forth in subpart A of this part for light-duty vehicles and light-duty trucks. The refueling emissions test procedure may be performed as an individual test or in combination with the evaporative and exhaust emissions test sequences of § 86.130–96.

(b) The refueling emissions test is designed to measure hydrocarbon emissions resulting from the generation or displacement of fuel tank vapor during vehicle refueling. The refueling emissions shall be measured by the enclosure technique.

(c) All emission control systems installed on or incorporated in a new motor vehicle shall be functioning during all procedures in this subpart except:

(1) In cases of component malfunction or failure; and

(2) during certain specified fuel drain and fill operations, at which times the refueling emission control canister is disconnected. Maintenance to correct component malfunction or failure shall be authorized in accordance with § 86.098–25.

(d) *For liquefied petroleum gas-fueled vehicles only*. Refueling test procedures for light-duty vehicles and light-duty trucks operated on liquefied petroleum gas are described in § 86.157.

[59 FR 16296, Apr. 6, 1994, as amended at 59 FR 48511, Sept. 21, 1994]

§ 86.151–98 General requirements; refueling test.

(a) The refueling emissions procedure, shown in Figure B98–12, starts with the stabilizing of the vehicle and the loading of the refueling emissions canister(s) to breakthrough, and continues with the vehicle drive for purging of the canister, followed by the refueling emissions measurement. The test is conducted following §§ 86.152–98 through 86.154–98 in order.

(b) Ambient temperature levels encountered by the test vehicle throughout the test sequence shall not be less than 68 °F (20 °C) nor more than 86 °F (30 °C).

(c) The vehicle shall be approximately level during all phases of the test sequence to prevent abnormal fuel distribution.

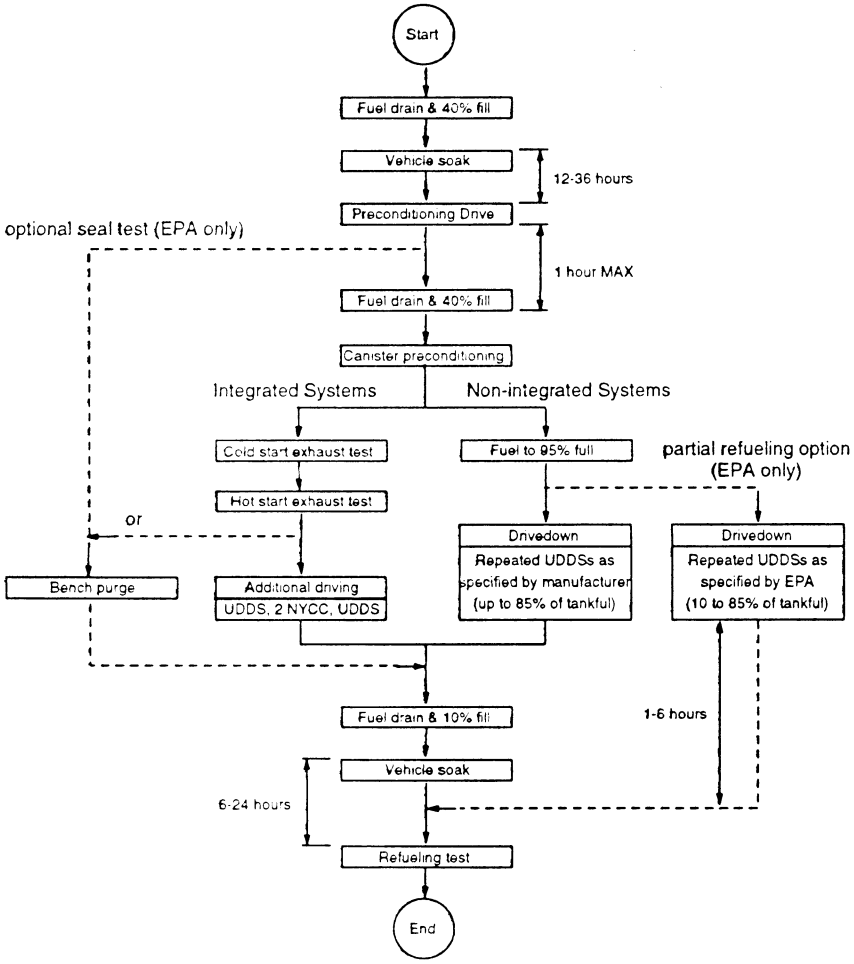

Figure B98-12: Refueling Test Sequence

[59 FR 16296, Apr. 6, 1994]

§ 86.152–98 Vehicle preparation; refueling test.

(a) Provide additional fittings and adapters, as required, to accommodate a fuel drain at the lowest point possible in the tank(s) as installed on the vehicle. The canister shall not be removed from the vehicle, unless access to the canister in its normal location is so restricted that purging and loading can only reasonably be accomplished by removing the canister from the vehicle. Special care shall be taken during this step to avoid damage to the components and the integrity of the fuel system. A replacement canister may be temporarily installed during the soak period while the canister from the test vehicle is preconditioned.

(b) Optionally, provide valving or other means to allow the venting of the refueling vapor line to the atmosphere rather than to the refueling emissions canister(s) when allowed by this test procedure.

(c) For preconditioning that involves loading the vapor collection canister(s) with butane, provide valving or other means as necessary to allow loading of the canister(s).

[59 FR 16298, Apr. 6, 1994, as amended at 60 FR 43898, Aug. 23, 1995; 70 FR 72927, Dec. 8, 2006]

§ 86.153–98 Vehicle and canister preconditioning; refueling test.

(a) *Vehicle and canister preconditioning*. Vehicles and vapor storage canisters shall be preconditioned in accordance with the preconditioning procedures for the supplemental two-diurnal evaporative emissions test specified in § 86.132–96 (a) through (j). For vehicles equipped with non-integrated refueling emission control systems, the canister must be loaded using the method involving butane loading to breakthrough (see § 86.132–96(j)(1)).

(b) *Seal test*. The Administrator may choose to omit certain canister load and purge steps, and replace them with a bench purge of the refueling canister(s), in order to verify the adequacy of refueling emission control system seals. Failure of this seal test shall constitute a failure of the refueling emission control test. For integrated systems, this bench purge may be performed after the exhaust testing in order to obtain exhaust emission test results. Non-integrated system seal testing shall be performed using paragraph (b)(1) of this section.

(1) *Without the exhaust emission test*. The Administrator may conduct the canister preconditioning by purging the canister(s) with at least 1200 canister bed volumes of ambient air (with humidity controlled to 50±25 grains of water vapor per pound of dry air) maintained at a nominal flow rate of 0.8 cfm directly following the preconditioning drive described in § 86.132–96 (c) through (e). In this case, the canister loading procedures and the vehicle driving procedures described in § 86.132–96 (f) through (j) and in paragraphs (c) through (d) of this section shall be omitted, and the 10 minute and 60 minute time requirements of paragraph (e) of this section shall apply to time after completion of the bench purge. In the case of multiple refueling canisters, each canister shall be purged separately.

(2) *With the exhaust emission test*. The Administrator may conduct the canister preconditioning by purging the canister(s) directly after the exhaust test (see paragraph (c)(1) of this section). The canister shall be purged with at least 1200 canister bed volumes of ambient air (with humidity controlled to 50±25 grains of water vapor per pound of dry air) maintained at a nominal flow rate of 0.8 cfm. In this case, the vehicle driving procedures described in paragraphs (c)(2) through (d) of this section shall be omitted, and the 10 minute and 60 minute time requirements of paragraph (e) of this section shall apply to time after completion of the bench purge. In the case of multiple refueling canisters, each canister shall be purged separately.

(3) Manufacturers may use the procedures described in this paragraph (b) to demonstrate compliance with the seal test for vehicles with fuel tanks exceeding 35 gallons nominal fuel tank capacity, and for any incomplete vehicles.

(c) *Canister purging; integrated systems*. (1) Vehicles to be tested for exhaust emissions only shall be processed according to §§ 86.135–94 through 86.137–96. Vehicles to be tested for refueling

emissions shall be processed in accordance with the procedures in §§ 86.135–94 through 86.137–96, followed by the procedures outlined in paragraph (c)(2) of this section.

(2) To provide additional opportunity for canister purge, conduct additional driving on a dynamometer, within one hour of completion of the hot start exhaust test, by operating the test vehicle through one UDDS, a 2 minute idle, two NYCCs, another 2 minute idle, another UDDS, then another 2 minute idle (see § 86.115–78 and appendix I of this part). Fifteen seconds after the engine starts, place the transmission in gear. Twenty seconds after the engine starts, begin the initial vehicle acceleration of the driving schedule. The transmission shall be operated according to the specifications of § 86.128–79 during the driving cycles. The vehicle's air conditioner (if so equipped) shall be turned off. Ambient temperature shall be controlled as specified in § 86.151–98. It is not necessary to monitor and/or control in-tank fuel temperatures.

(i) The fixed-speed fan specified in § 86.135–94(b) may be used for engine cooling. If a fixed-speed fan is used, the vehicle's hood shall be opened.

(ii) Alternatively, the roadspeed-modulated fan specified in § 86.107–96(d)(1) may be used for engine cooling. If a road-speed modulated fan is used, the vehicle's hood shall be closed.

(d) *Canister purging: non-integrated systems.* Within one hour of completion of canister loading to breakthrough, the fuel tank(s) shall be further filled to 95 percent of nominal tank capacity determined to the nearest one-tenth of a U.S. gallon (0.38 liter) with the fuel specified in § 86.113–94. During this fueling operation, the refueling emissions canister(s) shall be disconnected, unless the manufacturer specifies that the canister(s) should not be disconnected. Following completion of refueling, the refueling emissions canister(s) shall be reconnected, if the canister was disconnected during refueling. Special care shall be taken during this step to avoid damage to the components and the integrity of the fuel system. Vehicle driving to purge the refueling canister(s) shall be performed using either the chassis dynamometer procedure or the test track procedure, as described in paragraphs (d)(1) and (d)(2) of this section. The Administrator may choose to shorten the vehicle driving for a partial refueling test as described in paragraph (d)(3) of this section. For vehicles equipped with dual fuel tanks, the required volume of fuel shall be driven out of one tank, the second tank shall be selected as the fuel source, and the required volume of fuel shall be driven out of the second tank.

(1) *Chassis dynamometer procedure.* (i) Vehicle driving on a chassis dynamometer shall consist of repeated drives with the UDDS until 85 percent of fuel tank capacity has been consumed. Driving in testing performed by manufacturers may be terminated before 85 percent of the fuel tank capacity has been consumed, provided that driving is not terminated partway through a UDDS cycle. Driving in testing performed by the Administrator may be terminated after the same number of UDDS cycles as driven in the manufacturer's certification testing.

(ii) Except with the advance approval of the Administrator, the number of UDDSs required to consume 85 percent of tank fuel capacity (total capacity of both tanks when the vehicle is equipped with dual fuel tanks) shall be determined from the fuel economy on the UDDS applicable to the test vehicle and from the number of gallons to the nearest 0.1 gallon (0.38 liter) that constitutes 85 percent of tank volume. If this ''fuel consumed point'' occurs partway through a UDDS cycle, the cycle shall be completed in its entirety.

(iii) For vehicles equipped with dual fuel tanks, fuel switching from the first tank to the second tank shall occur at the 10 percent volume of the first tank regardless of the point in the UDDS cycle at which this occurs.

(iv) If necessary to accommodate work schedules, the engine may be turned off and the vehicle parked on the dynamometer. The vehicle may be parked off of the dynamometer to facilitate maintenance or repairs if required.

(v) During the driving on the dynamometer, a cooling fan(s) shall be positioned as described in § 86.135–94(b).

(2) *Test track procedure.* (i) Vehicle driving on a test track shall consist of repeated drives with the UDDS until 85 percent of fuel tank capacity has been consumed. Driving performed by manufacturers may be terminated before 85 percent of the fuel tank capacity has been consumed, provided that driving is not terminated partway through a UDDS cycle. Driving performed by the Administrator may be terminated after the same number of UDDS cycles as driven in the manufacturer's certification testing.

(ii) If the distance from the emission laboratory to the test track is less than 5 miles (8.05 km) the vehicle may be driven to the test track at a speed not to exceed 25 mph. If the distance is greater than 5 miles (8.05 km) the vehicle shall be moved to the test track with the engine off.

(iii) Except with the advance approval of the Administrator, the number of UDDSs required to consume 85 percent of tank fuel capacity (total capacity of both tanks when the vehicle is equipped with dual fuel tanks) shall be determined from the fuel economy on the UDDS applicable to the test vehicle and from the number of gallons to the nearest 0.1 gallon (0.38 liter) that constitutes 85 percent of tank volume. If this ''fuel consumed point'' occurs partway through a UDDS cycle, the cycle shall be completed in its entirety.

(iv) The vehicle shall be driven at a speed not to exceed 25 mph from the test track to the laboratory provided the distance from the test track to the laboratory does not exceed 5 miles (8.05 km). If the distance from the test track to the emission laboratory is greater than 5 miles (8.05 km) the vehicle shall be moved from the test track with the engine off.

(v) For vehicles equipped with dual fuel tanks, fuel switching from the first tank to the second tank shall occur at the 10 percent volume of the first tank regardless of the point in the UDDS cycle at which this occurs.

(vi) If necessary to accommodate work schedules, the engine may be turned off and the vehicle parked on the test track. The vehicle may be parked off of the test track to facilitate maintenance or repairs if required. If the vehicle is moved from the test track, it shall be returned to the track with the engine off when mileage accumulation is to be resumed.

(3) *Drive schedule for partial refueling test.* The Administrator may conduct a partial refueling test involving a shortening of the drive procedures described in paragraphs (d) (1) and (2) of this section and a modified soak and refueling procedure as described in paragraph (e) of this section and §86.154–98(e)(7)(i). The drive shall be performed as described in paragraph (d) (1) or (2) of this section except that the drive shall be terminated when at least 10 percent but no more than 85 percent of the fuel tank nominal capacity has been consumed and not partway through a UDDS cycle. The amount of fuel consumed in the drive shall be determined by multiplying the number of UDDSs driven by the mileage accumulated per UDDS and dividing by the fuel economy for the UDDS applicable to the test vehicle.

(e) *Vehicle cool down*—(1) *Partial refueling test.* If the Administrator is conducting the non-integrated system partial refueling test, after the driving procedure specified in paragraph (d)(3) of this section, the vehicle shall be parked (without starting the engine) and soaked at 80±3 °F (27±1.7 °C) for a minimum of 1 hour and a maximum of 6 hours.

(2) *For all other refueling emission tests.* Within 10 minutes of completion of refueling emissions canister stabilization (see paragraph (c) or (d) of this section), the refueling emissions canister(s) shall be disconnected, unless the manufacturer specifies that the refueling canister(s) should not be disconnected. Within 60 minutes of completion of refueling emissions canister stabilization (see paragraph (c) or (d) of this section), the vehicle fuel tank(s) shall be drained, the fuel tank(s) fueled to 10 percent of nominal tank capacity determined to the nearest one-tenth of a U.S. gallon (0.38 liter) with the specified fuel, and the vehicle parked (without starting the engine) and soaked at 80±3 °F (27±1.7 °C) for a minimum of 6 hours and a maximum of 24 hours.

[59 FR 16298, Apr. 6, 1994, as amended at 60 FR 43898, Aug. 23, 1995; 70 FR 72927, Dec. 8, 2005; 79 FR 23698, Apr. 28, 2014]

§ 86.154–98 Measurement procedure; refueling test.

(a) The refueling test measurement procedure described in this section immediately follows the vehicle and canister preconditioning described in § 86.153–98.

(b) The refueling emission enclosure shall be purged for several minutes immediately prior to the test. Warning: If at any time the concentration of hydrocarbons, of methanol, or of methanol and hydrocarbons exceeds 15,000 ppm C, the enclosure should be immediately purged. This concentration provides a 4:1 safety factor against the lean flammability limit.

(c)(1) The FID (or HFID) hydrocarbon analyzer, and additional analyzer, if needed, shall be zeroed and spanned immediately prior to the test.

(2) For methanol-fueled vehicles only, impingers charged with known volumes of pure deionized water shall be placed in the methanol sampling system.

(d) If not already on, the enclosure mixing fan and the spilled fuel mixing blower shall be turned on at this time.

(e) The refueling emission measurement portion of the refueling test shall be performed as follows:

(1) The line from the fuel tank(s) to the refueling emissions canister(s) shall be connected.

(2) The test vehicle, with the engine shut off, shall be moved into the enclosure. The test vehicle windows and luggage compartment shall be opened if not already open.

(3) An electrical ground shall be attached to the vehicle. The vehicle fuel filler cap shall be removed and the enclosure door shall be closed and sealed within two minutes of cap removal. The FID (or HFID) trace shall be allowed to stabilize.

(4) The dispensed fuel temperature recording system shall be started.

(5)(i) Within 10 minutes of closing and sealing the doors, analyze enclosure atmosphere for hydrocarbons and record. This is the initial (time = 0 minutes) hydrocarbon concentration, C_{HCi}, required in § 86.143–96.

(ii) For methanol-fueled vehicles only, measure the initial concentration of methanol as described in § 86.133–96(i)(6).

(6) Within one minute of obtaining the initial FID (or HFID) reading, and methanol reading if applicable, the fuel nozzle shall be inserted into the filler neck of the test vehicle, to its maximum penetration, and the refueling operation shall be started. The plane of the nozzle's handle shall be approximately perpendicular to the floor of the laboratory. The fuel shall be dispensed at a temperature of 67±1.5 °F (19.4±0.8 °C) and at a dispensing rate of 9.8±0.3 gal/min (37.1±1.1 liter/min). In testing conducted by the Administrator, a lower dispensing rate (no lower than 4.0 gal/min (15.1 liter/min)) may be used.

(7)(i) *Partial refueling test.* If the Administrator conducts the non-integrated system partial refueling test, the fuel flow shall continue until the amount of fuel pumped is equal to the fuel consumed during the driving, as determined in accordance with § 86.153–98(d)(3). The final volume of fuel dispensed must be within one-tenth of a U.S. gallon (0.38 liter) of the targeted amount. If automatic nozzle shut-off occurs prior to this point, the nozzle shall be reactivated within 15 seconds and fuel dispensing continued as needed. A minimum of 3 seconds shall elapse between any automatic shutoff and subsequent resumption of dispensing.

(ii) *For all other refueling tests.* The fuel flow shall continue until the refueling nozzle automatic shut-off is activated. The amount of fuel dispensed must be at least 85 percent of nominal fuel tank volume, determined to the nearest one-tenth of a U.S. gallon (0.38 liter). If automatic nozzle shut-off occurs prior to this point, the nozzle shall be reactivated within 15 seconds and fuel dispensing continued as needed. A minimum of 3 seconds shall elapse between any automatic shutoff and subsequent resumption of dispensing. Dispensing may not be manually terminated, unless the test vehicle has already clearly failed the test.

(8)(i) The final reading of the evaporative enclosure FID analyzer shall be taken 60±5 seconds following the final shut-off of fuel flow. This is the final hydrocarbon concentration, C_{HCf}, required in § 86.143–96. The elapsed time, in minutes, between the initial and

final FID (or HFID) readings shall be recorded.

(ii) *For methanol-fueled vehicles only.* Measure the final concentration of methanol as described in § 86.133–96(m)(2).

(9) For vehicles equipped with more than one fuel tank, the procedures described in this section shall be performed for each fuel tank.

[59 FR 16299, Apr. 6, 1994, as amended at 60 FR 43898, Aug. 23, 1995]

§ 86.155–98 Records required; refueling test.

The following information shall be recorded with respect to each test:

(a) Test number.

(b) System or device tested (brief description).

(c) Date and time of day.

(d) Instrument operated.

(e) Operator.

(f) Vehicle: ID number, manufacturer, model year, engine family, evaporative/refueling emission family, refueling emission control system, refueling emissions canister continuous drive purge miles and number of UDDSs driven for non-integrated systems, fuel system (including fuel tank(s) capacity and location), basic engine description (including displacement, number of cylinders, turbocharger (if used), and catalyst usage), engine code, and odometer reading.

(g) All pertinent instrument information including nozzle and fuel delivery system description. As an alternative, a reference to a vehicle test cell number may be used, with advance approval of the Administrator, provided test cell calibration records show the pertinent instrument information.

(h) Recorder charts: Identify zero, span, and enclosure gas sample traces.

(i) Enclosure barometric pressure and ambient temperature: a central laboratory barometer may be used, *provided* that individual test cell barometric pressures are shown to be within ±0.1 percent of the barometric pressure at the central barometer location.

(j) Temperatures: Soak area; dispensed fuel, initial and final.

(k) Fuel dispensing rate(s).

(l) Dispensed fuel volume.

(m) For methanol-fueled vehicles:

(1) Volume of sample passed through the methanol sampling system and the volume of deionized water in each impinger.

(2) The methanol concentration in the reference sample and the peak area from the GC analysis of the reference sample.

(3) The peak area of the GC analyses of the test samples (methanol).

(n) All additional information necessary for the calculations specified in § 86.156–98.

[59 FR 16300, Apr. 6, 1994]

§ 86.156–98 Calculations; refueling test.

(a) The calculation of the net hydrocarbon mass change and methanol mass change (if applicable) in the enclosure is used to determine refueling mass emissions. The mass is calculated from initial and final hydrocarbon and methanol (if applicable) concentrations in ppm carbon, initial and final enclosure ambient temperatures, initial and final barometric pressures, and net enclosure volume using the equations of § 86.143–96. For vehicles with multiple tanks, the results for each tank shall be calculated and then summed to determine overall refueling emissions.

(b) The final results for comparison with the refueling control emission standard shall be computed by dividing the total refueling mass emissions by the total gallons of fuel dispensed in the refueling test (see § 86.154–98(e)(7)(ii)).

(c) The results of all emission tests shall be rounded, in accordance with ASTM E 29–67 (reapproved 1980) (as referenced in § 86.094–28(a)(4)(i)(B)(*2*)(*ii*)) to the number of decimal places contained in the applicable emission standard expressed to one additional significant figure.

[59 FR 16300, Apr. 6, 1994]

§ 86.157–98 Refueling test procedures for liquefied petroleum gas-fueled vehicles.

(a) *Equipment.* (1) The sampling and analytical system shall meet the specifications in § 86.107–98(a) through (i).

(2) The refueling equipment nozzle specifications shall meet the requirements described in § 80.32.

(b) *General requirements.* (1) The refueling test procedure for light-duty liquefied petroleum gas-fueled vehicles and trucks starts with the preconditioning of the vehicle followed by a refueling emissions measurement. The test is conducted by following paragraphs (c) through (f) of this section in order.

(2) Ambient temperature levels encountered by the test vehicle throughout the test sequence shall not be less than 68 °F (20 °C) nor more than 86 °F (30 °C).

(3) The vehicle shall be approximately level during all phases of the test sequence to prevent abnormal fuel distribution.

(c) *Vehicle preconditioning.* (1) The vehicle fuel tanks are to be filled with fuel that meets the specifications in § 86.113. Fuel tanks shall be filled to 10 percent of nominal fuel tank capacity, determined to the nearest one-tenth of a U.S. gallon (0.38 liter).

(2) The vehicle shall be parked (without starting the engine) within the temperature range specified in paragraph (a)(2) of this section for a minimum of one hour and a maximum of six hours.

(d) *Measurement procedure.* (1) The steps prior to the actual refueling event described in § 86.154–98(b) through (e)(5) shall be performed.

(2) Within one minute of obtaining the initial FID (or HFID) reading, the dispensed fuel nozzle shall be attached to the vehicle fuel receptacle, and the refueling operation shall be started. If the vehicle is equipped with a fixed liquid level gauge or other gauge or valve which could be opened to release fuel or fuel vapor during refueling, and has not received an exemption as outlined in § 86.098–28(h), § 86.001–28(h) or § 86.004–28(h), the fixed level gauge or other gauges or valves shall be opened after the dispensing nozzle is attached, but prior to the start of the refueling operation. The dispensed fuel must be at a temperature stabilized to approximately the same temperature as the vehicle was in paragraph (c)(2) of this section. The dispensing rate must be typical of in-use dispensing rates for liquefied petroleum gas into light-duty vehicles and trucks.

(3) The fuel flow shall continue until the amount of fuel dispensed is at least 85 percent of nominal fuel tank capacity, determined to the nearest one-tenth of a U.S. gallon (0.38 liter).

(4) Following the fuel shut-off the fixed liquid level gauge or other gauges or valves, if open, shall be closed and the nozzle disconnected.

(5) The final reading of the evaporative enclosure FID (or HFID) analyzer shall be taken 60 ±5 seconds following the disconnect of the refueling nozzle. This is the final hydrocarbon concentration, C_{HCf}, required in § 86.143. The elapsed time, in minutes, between the initial and final FID (or HFID) readings shall be recorded.

(6) For vehicles equipped with more than one fuel tank, the procedures described in this section shall be performed for each fuel tank.

(e) *Records required.* (1) Test: test number, system or device tested (brief description), date and time of day, instrument operated, operator, enclosure barometric pressure and temperature, recorder charts (identify zero, span, and enclosure gas traces), fuel dispensing rate(s) and dispensed fuel volume.

(2) Vehicle: ID number, manufacturer, model year, engine family, evaporative/refueling emission family, fuel tank(s) capacity, basic fuel system description and odometer reading.

(3) All pertinent instrument information including nozzle and fuel delivery system description. As an alternative, a reference to a vehicle test cell number may be used, with advance approval of the Administrator, provided test cell calibration records show the pertinent instrument information.

(4) All additional information necessary for the calculations specified in paragraph (f) of this section.

(f) *Calculations.* (1) The calculation of the net hydrocarbon mass change in the enclosure is used to determine refueling mass emissions. The mass is calculated from initial and final hydrocarbon concentrations in ppm carbon, initial and final enclosure ambient temperatures, initial and final barometric pressures and net volume using the equations of § 86.143. For vehicles with multiple tanks, the results for each tank shall be calculated and then

summed to determine overall refueling emissions.

(2) The final results for comparison with the refueling control emission standard shall be computed by dividing the total refueling mass emissions by the total gallons of fuel dispensed in the refueling test (see paragraph (d)(3) of this section).

(3) The results of all emission tests shall be rounded, in accordance with ASTM E 29–67 to the number of decimal places contained in the applicable emission standard expressed to one additional significant figure. This procedure has been incorporated by reference (see § 86.1).

[59 FR 48511, Sept. 21, 1994]

§ 86.158–00 Supplemental Federal Test Procedures; overview.

The procedures described in §§ 86.158–00, 86.159–00, 86.160–00, and 86.162–00 discuss the aggressive driving (US06) and air conditioning (SC03) elements of the Supplemental Federal Test Procedures (SFTP). These test procedures consist of two separable test elements: A sequence of vehicle operation that tests exhaust emissions with a driving schedule (US06) that tests exhaust emissions under high speeds and accelerations (aggressive driving); and a sequence of vehicle operation that tests exhaust emissions with a driving schedule (SC03) which includes the impacts of actual air conditioning operation. These test procedures (and the associated standards set forth in subpart S of this part) are applicable to light-duty vehicles and light-duty trucks.

(a) Vehicles are tested for the exhaust emissions of THC, CO, NO_X. CH_4, and CO_2. For diesel-cycle vehicles, THC is sampled and analyzed continuously according to the provisions of § 86.110.

(b) Each test procedure follows the vehicle preconditioning specified in § 86.132–00.

(c) *US06 Test Cycle*. The test procedure for emissions on the US06 driving schedule (see § 86.159–00) is designed to determine gaseous exhaust emissions from light-duty vehicles and light-duty trucks while simulating high speed and acceleration on a chassis dynamometer (aggressive driving). The full test consists of preconditioning the engine to a hot stabilized condition, as specified in § 86.132–00, and an engine idle period of 1 to 2 minutes, after which the vehicle is accelerated into the US06 cycle. A proportional part of the diluted exhaust is collected continuously for subsequent analysis, using a constant volume (variable dilution) sampler or critical flow venturi sampler.

(d) *SC03 Test Cycle*. The test procedure for determining exhaust emissions with the air conditioner operating (see § 86.160–00) is designed to determine gaseous exhaust emissions from light-duty vehicles and light-duty trucks while simulating an urban trip during ambient conditions of 95 °F, 100 grains of water/pound of dry air (approximately 40 percent relative humidity), and a solar heat load intensity of 850 W/m^2. The full test consists of vehicle preconditioning (see § 86.132–00 paragraphs (o) (1) and (2)), an engine key-off 10 minute soak, an engine start, and operation over the SC03 cycle. A proportional part of the diluted exhaust is collected continuously during the engine start and the SC03 driving cycle for subsequent analysis, using a constant volume (variable dilution) sampler or critical flow venturi sampler.

(e) The emission results from the aggressive driving test (§ 86.159–00), air conditioning test (§ 86.160–00), and a FTP test (§ 86.130–00 (a) through (d) and (f)) (conducted on a large single roll or equivalent dynamometer) are analyzed according to the calculation methodology in § 86.164–00 and compared to the applicable SFTP emission standards in subpart A of this part (§§ 86.108–00 and 86.109–00).

(f) These test procedures may be run in any sequence that maintains the applicable preconditioning elements specified in § 86.132–00.

[61 FR 54894, Oct. 22, 1996, as amended at 70 FR 40434, July 13, 2005]

§ 86.158–08 Supplemental Federal Test Procedures; overview.

The procedures described in §§ 86.158–08, 86.159–08, 86.160–00, and 86.162–00 discuss the aggressive driving (US06) and air conditioning (SC03) elements of the Supplemental Federal Test Procedures (SFTP). These test procedures consist of two separable test elements: A sequence of vehicle operation that tests

exhaust emissions with a driving schedule (US06) that tests exhaust emissions under high speeds and accelerations (aggressive driving); and a sequence of vehicle operation that tests exhaust emissions with a driving schedule (SC03) which includes the impacts of actual air conditioning operation. These test procedures (and the associated standards set forth in subpart S of this part) are applicable to light-duty vehicles and light-duty trucks.

(a) Vehicles are tested for the exhaust emissions of THC, CO, NO_X, CH_4, and CO_2. For diesel-cycle vehicles, THC is sampled and analyzed continuously according to the provisions of § 86.110.

(b) Each test procedure follows the vehicle preconditioning specified in § 86.132–00.

(c) *US06 Test Cycle*. The test procedure for emissions on the US06 driving schedule (see § 86.159–08) is designed to determine gaseous exhaust emissions from light-duty vehicles and light-duty trucks while simulating high speed and acceleration on a chassis dynamometer (aggressive driving). The full test consists of preconditioning the engine to a hot stabilized condition, as specified in § 86.132–00, and an engine idle period of 1 to 2 minutes, after which the vehicle is accelerated into the US06 cycle. A proportional part of the diluted exhaust is collected continuously for subsequent analysis, using a constant volume (variable dilution) sampler or critical flow venturi sampler. Optionally, as specified in § 86.159–08 and in part 600 of this chapter, a proportional part of the diluted exhaust may be collected continuously in two bag samples, one representing US06 City driving and the other representing US06 Highway driving. If two bag samples are collected, for petroleum-fueled diesel-cycle vehicles for which THC is sampled and analyzed continuously according to the provisions of § 86.110, the analytical system shall be configured to calculate THC for the US06 City phase and the US06 Highway phase as described in § 86.159–08.

(d) *SC03 Test Cycle*. The test procedure for determining exhaust emissions with the air conditioner operating (see § 86.160–00) is designed to determine gaseous exhaust emissions from light-duty vehicles and light-duty trucks while simulating an urban trip during ambient conditions of 95 °F, 100 grains of water/pound of dry air (approximately 40 percent relative humidity), and a solar heat load intensity of 850 W/m^2. The full test consists of vehicle preconditioning (see § 86.132–00 paragraphs (o)(1) and (2)), an engine key-off 10 minute soak, an engine start, and operation over the SC03 cycle. A proportional part of the diluted exhaust is collected continuously during the engine start and the SC03 driving cycle for subsequent analysis, using a constant volume (variable dilution) sampler or critical flow venturi sampler.

(e) The emission results from the aggressive driving test (§ 86.159–08), air conditioning test (§ 86.160–00), and FTP test (§ 86.130–00 (a) through (d) and (f)) (conducted on a large single roll or equivalent dynamometer) are analyzed according to the calculation methodology in § 86.164–08 and compared to the applicable SFTP emission standards in subpart S of this part.

(f) These test procedures may be run in any sequence that maintains the applicable preconditioning elements specified in § 86.132–00.

[71 FR 77920, Dec. 27, 2006]

§ 86.159–00 Exhaust emission test procedures for US06 emissions.

(a) *Overview*. The dynamometer operation consists of a single, 600 second test on the US06 driving schedule, as described in appendix I, paragraph (g), of this part. The vehicle is preconditioned in accordance with § 86.132–00, to bring it to a warmed-up stabilized condition. This preconditioning is followed by a 1 to 2 minute idle period that proceeds directly into the US06 driving schedule during which continuous proportional samples of gaseous emissions are collected for analysis. If engine stalling should occur during cycle operation, follow the provisions of § 86.136–90 (engine starting and restarting). For gasoline-fueled Otto-cycle vehicles, the composite samples collected in bags are analyzed for THC, CO, CO_2, CH_4, and NO_X. For petroleum-fueled diesel-cycle vehicles, THC is sampled and analyzed continuously according to the provisions of § 86.110. Parallel bag samples of

dilution air are analyzed for THC, CO, CO_2, CH_4, and NO_X.

(b) *Dynamometer activities.* (1) All official US06 tests shall be run on a large single roll electric dynamometer, or an approved equivalent dynamometer configuration, that satisfies the requirements of § 86.108–00.

(2) Position (vehicle can be driven) the test vehicle on the dynamometer and restrain.

(3) Required US06 schedule test dynamometer inertia weight class selections are determined by the test vehicles test weight basis and corresponding equivalent weight as listed in the tabular information of § 86.129–94(a) and discussed in § 86.129–00 (e) and (f).

(4) Set the dynamometer test inertia weight and roadload horsepower requirements for the test vehicle (see § 86.129–00 (e) and (f). The dynamometer's horsepower adjustment settings shall be set to match the force imposed during dynamometer operation with actual road load force at all speeds.

(5) The vehicle speed as measured from the dynamometer rolls shall be used. A speed vs. time recording, as evidence of dynamometer test validity, shall be supplied on request of the Administrator.

(6) The drive wheel tires may be inflated up to a gauge pressure of 45 psi (310 kPa), or the manufacturer's recommended pressure if higher than 45 psi, in order to prevent tire damage. The drive wheel tire pressure shall be reported with the test results.

(7) The driving distance, as measured by counting the number of dynamometer roll or shaft revolutions, shall be determined for the test.

(8) Four-wheel drive and all-wheel drive vehicles may be tested either in a four-wheel drive or a two-wheel drive mode of operation. In order to test in the two-wheel drive mode, four-wheel drive and all-wheel drive vehicles may have one set of drive wheels disengaged; four-wheel and all-wheel drive vehicles which can be shifted to a two-wheel mode by the driver may be tested in a two-wheel drive mode of operation.

(9) During dynamometer operation, a fixed speed cooling fan with a maximum discharge velocity of 15,000 cfm will be positioned so as to direct cooling air to the vehicle in an appropriate manner with the engine compartment cover open. In the case of vehicles with front engine compartments, the fan shall be positioned within 24 inches (61 centimeters) of the vehicle. In the case of vehicles with rear engine compartments (or if special designs make the above impractical), the cooling fan(s) shall be placed in a position to provide sufficient air to maintain vehicle cooling. The Administrator may approve modified cooling configurations or additional cooling if necessary to satisfactorily perform the test. In approving requests for additional or modified cooling, the Administrator will consider such items as actual road cooling data and whether such additional cooling is needed to provide a representative test.

(c) The flow capacity of the CVS shall be large enough to virtually eliminate water condensation in the system.

(d) Practice runs over the prescribed driving schedule may be performed at test point, provided an emission sample is not taken, for the purpose of finding the appropriate throttle action to maintain the proper speed-time relationship, or to permit sampling system adjustment.

(e) Perform the test bench sampling sequence outlined in § 86.140–94 prior to or in conjunction with each series of exhaust emission measurements.

(f) *Test activities.* (1) The US06 consists of a single test which is directly preceded by a vehicle preconditioning in accordance with § 86.132–00. Following the vehicle preconditioning, the vehicle is idled for not less than one minute and not more than two minutes. The equivalent dynamometer mileage of the test is 8.0 miles (1.29 km).

(2) The following steps shall be taken for each test:

(i) Immediately after completion of the preconditioning, idle the vehicle. The idle period is not to be less than one minute or not greater than two minutes.

(ii) With the sample selector valves in the ''standby'' position, connect evacuated sample collection bags to

the dilute exhaust and dilution air sample collection systems.

(iii) Start the CVS (if not already on), the sample pumps, the temperature recorder, the vehicle cooling fan, and the heated THC analysis recorder (diesel-cycle only). The heat exchanger of the constant volume sampler, if used, petroleum-fueled diesel-cycle THC analyzer continuous sample line should be preheated to their respective operating temperatures before the test begins.

(iv) Adjust the sample flow rates to the desired flow rate and set the gas flow measuring devices to zero.

(A) For gaseous bag samples (except THC samples), the minimum flow rate is 0.17 cfm (0.08 liters/sec).

(B) For THC samples, the minimum FID (or HFID in the case of diesel-cycle vehicles) flow rate is 0.066 cfm (0.031 liters/sec).

(C) CFV sample flow rate is fixed by the venturi design.

(v) Attach the exhaust tube to the vehicle tailpipe(s).

(vi) Start the gas flow measuring device, position the sample selector valves to direct the sample flow into the exhaust sample bag, the dilution air sample bag, turn on the petroleum-fueled diesel-cycle THC analyzer system integrator, mark the recorder chart, and record both gas meter or flow measurement instrument readings, (if applicable).

(vii) Place vehicle in gear after starting the gas flow measuring device, but prior to the first acceleration. Begin the first acceleration 5 seconds after starting the measuring device.

(viii) Operate the vehicle according to the US06 driving schedule, as described in appendix I, paragraph (g), of this part. Manual transmission vehicles shall be shifted according to the manufacturer recommended shift schedule, subject to review and approval by the Administrator. For further guidance on transmissions see § 86.128–00.

(ix) Turn the engine off 2 seconds after the end of the last deceleration (i.e., engine off at 596 seconds).

(x) Five seconds after the engine stops running, simultaneously turn off gas flow measuring device No. 1 (and the petroleum-fueled diesel hydrocarbon integrator No. 1 and mark the petroleum-fueled diesel hydrocarbon recorder chart if applicable) and position the sample selector valves to the ''standby'' position. Record the measured roll or shaft revolutions and the No. 1 gas meter reading or flow measurement instrument.

(xi) As soon as possible, transfer the exhaust and dilution air bag samples to the analytical system and process the samples according to § 86.140–94 obtaining a stabilized reading of the bag exhaust sample on all analyzers within 20 minutes of the end of the sample collection phase of the test.

(xii) Immediately after the end of the sample period, turn off the cooling fan, close the engine compartment cover, disconnect the exhaust tube from the vehicle tailpipe(s), and drive the vehicle from dynamometer.

(xiii) The CVS or CFV may be turned off, if desired.

[61 FR 54894, Oct. 22, 1996, as amended at 70 FR 40434, July 13, 2005; 70 FR 72928, Dec. 8, 2005]

§ 86.159–08 Exhaust emission test procedures for US06 emissions.

(a) *Overview.* The dynamometer operation consists of a single, 600 second test on the US06 driving schedule, as described in appendix I, paragraph (g), of this part. The vehicle is preconditioned in accordance with § 86.132–00, to bring it to a warmed-up stabilized condition. This preconditioning is followed by a 1 to 2 minute idle period that proceeds directly into the US06 driving schedule during which continuous proportional samples of gaseous emissions are collected for analysis. US06 emissions may optionally be collected in two bag samples representing US06 City and US06 Highway emissions, as provided for in this section and in part 600 of this chapter. Emissions from seconds 0–130 and seconds 495–596 are collected in one bag to represent US06 City emissions, and emissions from seconds 130–495 are collected in a second bag to represent US06 Highway emissions. If engine stalling should occur during cycle operation, follow the provisions of § 86.136–90 (engine starting and restarting). For gasoline-fueled Otto-cycle vehicles, the composite samples collected in bags

are analyzed for THC, CO, CO_2, CH_4, and NO_X. For petroleum-fueled diesel-cycle vehicles, THC is sampled and analyzed continuously according to the provisions of §86.110. Parallel bag samples of dilution air are analyzed for THC, CO, CO_2, CH_4, and NO_X.

(b) *Dynamometer activities.* (1) All official US06 tests shall be run on a large single roll electric dynamometer, or an approved equivalent dynamometer configuration, that satisfies the requirements of §86.108–00.

(2) Position (vehicle can be driven) the test vehicle on the dynamometer and restrain.

(3) Required US06 schedule test dynamometer inertia weight class selections are determined by the test vehicles test weight basis and corresponding equivalent weight as listed in the tabular information of §86.129–94(a) and discussed in §86.129–00 (e) and (f).

(4) Set the dynamometer test inertia weight and roadload horsepower requirements for the test vehicle according to §86.129–00 (e) and (f). The dynamometer's horsepower adjustment settings shall be set to match the force imposed during dynamometer operation with actual road load force at all speeds.

(5) The vehicle speed as measured from the dynamometer rolls shall be used. A speed vs. time recording, as evidence of dynamometer test validity, shall be supplied on request of the Administrator.

(6) The drive wheel tires may be inflated up to a gauge pressure of 45 psi (310 kPa), or the manufacturer's recommended pressure if higher than 45 psi, in order to prevent tire damage. The drive wheel tire pressure shall be reported with the test results.

(7) The driving distance, as measured by counting the number of dynamometer roll or shaft revolutions, shall be determined for the test.

(8) Four-wheel drive and all-wheel drive vehicles may be tested either in a four-wheel drive or a two-wheel drive mode of operation. In order to test in the two-wheel drive mode, four-wheel drive and all-wheel drive vehicles may have one set of drive wheels disengaged; four-wheel and all-wheel drive vehicles which can be shifted to a two-wheel mode by the driver may be tested in a two-wheel drive mode of operation.

(9) During dynamometer operation, a fixed speed cooling fan with a maximum discharge velocity of 15,000 cfm will be positioned so as to direct cooling air to the vehicle in an appropriate manner with the engine compartment cover open. In the case of vehicles with front engine compartments, the fan shall be positioned within 24 inches (61 centimeters) of the vehicle. In the case of vehicles with rear engine compartments (or if special designs make the above impractical), the cooling fan(s) shall be placed in a position to provide sufficient air to maintain vehicle cooling. The Administrator may approve modified cooling configurations, additional cooling, variable speed fan(s), and/or a closed engine compartment cover if necessary to satisfactorily perform the test. In approving requests for additional or modified cooling, the Administrator will consider such items as actual road cooling data and whether such additional cooling is needed to provide a representative test. For example, the hood may be closed to provide adequate air flow to an intercooler through a factory installed hood scoop. Additionally, the Administrator may conduct certification, fuel economy and in-use testing using the additional cooling set-up approved for a specific vehicle.

(c) The flow capacity of the CVS shall be large enough to virtually eliminate water condensation in the system.

(d) Practice runs over the prescribed driving schedule may be performed at test point, provided an emission sample is not taken, for the purpose of finding the appropriate throttle action to maintain the proper speed-time relationship, or to permit sampling system adjustment.

(e) Perform the test bench sampling sequence outlined in §86.140–94 prior to or in conjunction with each series of exhaust emission measurements.

(f) *Test activities.* (1) The US06 consists of a single test which is directly preceded by a vehicle preconditioning in accordance with §86.132–00. Following the vehicle preconditioning, the vehicle is idled for not less than one

minute and not more than two minutes. The equivalent dynamometer mileage of the test is 8.0 miles (1.29 km).

(2) The following steps shall be taken for each test:

(i) Immediately after completion of the preconditioning, idle the vehicle. The idle period is not to be less than one minute or greater than two minutes.

(ii) With the sample selector valves in the ''standby'' position, connect evacuated sample collection bags to the dilute exhaust and dilution air sample collection systems.

(iii) Start the CVS (if not already on), the sample pumps, the temperature recorder, the vehicle cooling fan, and the heated THC analysis recorder (diesel-cycle only). The heat exchanger of the constant volume sampler, if used, petroleum-fueled diesel-cycle THC analyzer continuous sample line should be preheated to their respective operating temperatures before the test begins.

(iv) Adjust the sample flow rates to the desired flow rate and set the gas flow measuring devices to zero.

(A) For gaseous bag samples (except THC samples), the minimum flow rate is 0.17 cfm (0.08 liters/sec).

(B) For THC samples, the minimum FID (or HFID in the case of diesel-cycle vehicles) flow rate is 0.066 cfm (0.031 liters/sec).

(C) CFV sample flow rate is fixed by the venturi design.

(v) Attach the exhaust tube to the vehicle tailpipe(s).

(vi) Start the gas flow measuring device, position the sample selector valves to direct the sample flow into the exhaust sample bag, the dilution air sample bag, turn on the petroleum-fueled diesel-cycle THC analyzer system integrator, mark the recorder chart, and record both gas meter or flow measurement instrument readings, (if applicable).

(vii) Place vehicle in gear after starting the gas flow measuring device, but prior to the first acceleration. Begin the first acceleration 5 seconds after starting the measuring device.

(viii) Operate the vehicle according to the US06 driving schedule, as described in appendix I, paragraph (g), of this part. Manual transmission vehicles shall be shifted according to the manufacturer recommended shift schedule, subject to review and approval by the Administrator. For further guidance on transmissions see § 86.128–00.

(ix) Paragraphs (f)(2)(ix)(A) and (B) of this section apply to vehicles for which the manufacturer is collecting US06 City and US06 Highway emissions for subsequent analysis according to the provisions of part 600 of this chapter. Vehicles for which emissions are being collected in a single continuous sample for subsequent analysis must be tested according to paragraph (x) of this section, and this paragraph (f)(2)(ix) will not apply.

(A) At two seconds after the end of the deceleration which is scheduled to occur at 128 seconds (i.e., at 130 seconds), simultaneously switch the sample flows from the ''US06 City'' bags and samples to the ''US06 Highway'' bags and samples, switch gas flow measuring device No. 1 (and the petroleum-fueled diesel hydrocarbon integrator No. 1 and mark the petroleum-fueled diesel hydrocarbon recorder chart if applicable) to ''standby'' mode, and start gas flow measuring device No. 2 (and the petroleum-fueled diesel hydrocarbon integrator No. 2 if applicable). Before the acceleration which is scheduled to occur at 136 seconds, record the measured roll or shaft revolutions.

(B) At two seconds after the end of the deceleration which is scheduled to occur at 493 seconds (i.e., at 495 seconds), simultaneously switch the sample flows from the ''US06 Highway'' bags and samples to the ''US06 City'' bags and samples, switch off gas flow measuring device No. 2 (and the petroleum-fueled diesel hydrocarbon integrator No. 2 and mark the petroleum-fueled diesel hydrocarbon recorder chart if applicable), and start gas flow measuring device No. 1 (and the petroleum-fueled diesel hydrocarbon integrator No. 1 if applicable). Before the acceleration which is scheduled to occur at 500 seconds, record the measured roll or shaft revolutions and the

No. 2 gas meter reading or flow measurement instrument. As soon as possible transfer the ''US06 Highway'' exhaust and dilution air bag samples to the analytical system and process the samples according to § 86.140–94 obtaining a stabilized reading of the bag exhaust sample on all analyzers within 20 minutes of the end of the sample collection phase of the test.

(x) Turn the engine off 2 seconds after the end of the last deceleration (i.e., engine off at 596 seconds).

(xi) Five seconds after the engine stops running, simultaneously turn off gas flow measuring device No. 1 (and the petroleum-fueled diesel hydrocarbon integrator No. 1 and mark the petroleum-fueled diesel hydrocarbon recorder chart if applicable) and position the sample selector valves to the ''standby'' position. Record the measured roll or shaft revolutions and the No. 1 gas meter reading or flow measurement instrument.

(xii) As soon as possible, transfer the exhaust and dilution air bag samples (or the US06 City exhaust and dilution air bag samples, if applicable) to the analytical system and process the samples according to § 86.140–94 obtaining a stabilized reading of the bag exhaust sample on all analyzers within 20 minutes of the end of the sample collection phase of the test.

(xiii) Immediately after the end of the sample period, turn off the cooling fan, close the engine compartment cover, disconnect the exhaust tube from the vehicle tailpipe(s), and drive the vehicle from dynamometer.

(xiv) The CVS or CFV may be turned off, if desired.

[71 FR 77920, Dec. 27, 2006, as amended at 74 FR 61548, Nov. 25, 2009]

§ 86.160–00 Exhaust emission test procedure for SC03 emissions.

(a) *Overview*. The dynamometer operation consists of a single, 600 second test on the SC03 driving schedule, as described in appendix I, paragraph (h), of this part. The vehicle is preconditioned, in accordance with § 86.132–00 of this subpart, to bring the vehicle to a warmed-up stabilized condition. This preconditioning is followed by a 10 minute vehicle soak (engine off) that proceeds directly into the SC03 driving schedule, during which continuous proportional samples of gaseous emissions are collected for analysis. The entire test, including the preconditioning driving, vehicle soak, and SC03 official test cycle, is either conducted in an environmental test facility or under test conditions that simulates testing in an environmental test cell (see § 86.162–00 (a) for a discussion of simulation procedure approvals). The environmental test facility must be capable of providing the following nominal ambient test conditions of: 95 °F air temperature, 100 grains of water/pound of dry air (approximately 40 percent relative humidity), a solar heat load intensity of 850 W/m^2, and vehicle cooling air flow proportional to vehicle speed. Section 86.161–00 discusses the minimum facility requirements and corresponding control tolerances for air conditioning ambient test conditions. The vehicle's air conditioner is operated or appropriately simulated for the duration of the test procedure (except for the vehicle 10 minute soak), including the preconditioning. For gasoline-fueled Otto-cycle vehicles, the composite samples collected in bags are analyzed for THC, CO, CO_2, CH_4, and NO_X. For petroleum-fueled diesel-cycle vehicles, THC is sampled and analyzed continuously according to the provisions of § 86.110. Parallel bag samples of dilution air are analyzed for THC, CO, CO_2, CH_4, and NO_X.

(b) *Dynamometer activities*. (1) All official air conditioning tests shall be run on a large single roll electric dynamometer or an equivalent dynamometer configuration that satisfies the requirements of § 86.108–00.

(2) Position (vehicle can be driven) the test vehicle on the dynamometer and restrain.

(3) Required SC03 schedule test dynamometer inertia weight class selections are determined by the test vehicles test weight basis and corresponding equivalent weight as listed in the tabular information of § 86.129–00(a) and discussed in § 86.129–00 (e) and (f).

(4) Set the dynamometer test inertia weight and roadload horsepower requirements for the test vehicle (see § 86.129–00 (e) and (f)). The dynamometer's horsepower adjustment

settings shall be set such that the force imposed during dynamometer operation matches actual road load force at all speeds.

(5) The vehicle speed as measured from the dynamometer rolls shall be used. A speed vs. time recording, as evidence of dynamometer test validity, shall be supplied at request of the Administrator.

(6) The drive wheel tires may be inflated up to a gauge pressure of 45 psi (310 kPa), or the manufacturer's recommended pressure if higher than 45 psi, in order to prevent tire damage. The drive wheel tire pressure shall be reported with the test results.

(7) The driving distance, as measured by counting the number of dynamometer roll or shaft revolutions, shall be determined for the test.

(8) Four-wheel drive and all-wheel drive vehicles may be tested either in a four-wheel drive or a two-wheel drive mode of operation. In order to test in the two-wheel drive mode, four-wheel drive and all-wheel drive vehicles may have one set of drive wheels disengaged; four-wheel and all-wheel drive vehicles which can be shifted to a two-wheel mode by the driver may be tested in a two-wheel drive mode of operation.

(c) *Vehicle and test activities for testing in a full environmental cell.* The SFTP air conditioning test in an environmental test cell is composed of the following sequence of activities. Alternative procedures which appropriately simulate full environmental cell testing may be approved under the provisions of §§ 86.162–00(a) and 86.163–00.

(1) Drain and fill the vehicle's fuel tank to 40 percent capacity with test fuel. If a vehicle has gone through the drain and fuel sequence less than 72 hours previously and has remained under laboratory ambient temperature conditions, this drain and fill operation can be omitted (see § 86.132–00(c)(2)(ii)).

(2)(i) Position the variable speed cooling fan in front of the test vehicle with the vehicle's hood down. This air flow should provide representative cooling at the front of the test vehicle (air conditioning condenser and engine) during the SC03 driving schedule. See § 86.161–00(e) for a discussion of cooling fan specifications.

(ii) In the case of vehicles with rear engine compartments (or if this front location provides inadequate engine cooling), an additional cooling fan shall be placed in a position to provide sufficient air to maintain vehicle cooling. The fan capacity shall normally not exceed 5300 cfm (2.50 m^3/s). If, however, it can be demonstrated that during road operation the vehicle receives additional cooling, and that such additional cooling is needed to provide a representative test, the fan capacity may be increased or additional fans used if approved in advance by the Administrator.

(3) Close all vehicle windows.

(4) Connect the emission test sampling system to the vehicle's exhaust tail pipe(s).

(5)(i) Set the environmental test cell ambient test conditions to the conditions defined in § 86.161–00.

(ii) Turn on the solar heating system.

(iii) All vehicle test phases of preconditioning, soak, and the official SC03 test cycle are to be performed in this set of ambient test conditions.

(6) Set the air conditioning system controls as follows:

(i) A/C mode setting at Maximum.

(ii) Airflow setting at Recirculate, if so equipped.

(iii) Fan setting at Highest setting.

(iv) A/C Temperature setting at full cool (for automatic systems set at 72 °F).

(v) Air conditioning controls should be placed in the ''on'' position prior to vehicle starting so that the air conditioning system is active whenever the engine is running.

(7) Start the vehicle (with air conditioning system on) and conduct a preconditioning cycle as discussed in § 86.132–00(o)(1).

(i) If engine stalling should occur during any air conditioning test cycle operation, follow the provisions of § 86.136–90 (Engine starting and restarting).

(ii) For manual transmission vehicles, the vehicle shall be shifted according the provisions of § 86.128–00.

(8) Following the preconditioning cycle, the test vehicle (and consequently the air conditioning system) and cooling fan(s) are turned off and the vehicle is allowed to soak in the

ambient conditions of paragraph (c)(5) of this section for 10 ±1 minutes.

(9) Start engine (with air conditioning system also running). Fifteen seconds after the engine starts, place vehicle in gear.

(10) Eighteen seconds after the engine starts, begin the initial vehicle acceleration of the driving schedule.

(11) Operate the vehicle according to the SC03 driving schedule, as described in appendix I, paragraph (h), of this part.

(12) Turn the engine off 2 seconds after the end of the last deceleration (i.e., engine off at 596 seconds).

(d) *Exhaust Emission Measurement Activities.* The following activities are performed, when applicable, in order to meet the timing of the vehicle test and environmental facility activities.

(1) Perform the test bench sampling calibration sequence outlined in § 86.140–94 prior to or in conjunction with each series of exhaust emission measurements.

(2) With the sample selector valves in the ''standby'' position, connect evacuated sample collection bags to the dilute exhaust and dilution air sample collection systems.

(3) Start the CVS (if not already on), the sample pumps, the temperature recorder, the vehicle cooling fan, and the heated THC analysis recorder (diesel-cycle only). The heat exchanger of the constant volume sampler, if used, petroleum-fueled diesel-cycle THC analyzer continuous sample line should be preheated to their respective operating temperatures before the test begins.

(4) Adjust the sample flow rates to the desired flow rate and set the gas flow measuring devices to zero.

(i) For gaseous bag samples (except THC samples), the minimum flow rate is 0.17 cfm (0.08 liters/sec).

(ii) For THC samples, the minimum FID (or HFID in the case of diesel-cycle vehicles) flow rate is 0.066 cfm (0.031 1/sec).

(iii) CFV sample flow rate is fixed by the venturi design.

(5) Attach the exhaust tube to the vehicle tailpipe(s).

(6) Start the gas flow measuring device, position the sample selector valves to direct the sample flow into the exhaust sample bag, the dilution air sample bag, turn on the petroleum-fueled diesel-cycle THC analyzer system integrator, mark the recorder chart, and record both gas meter or flow measurement instrument readings, if applicable.

(7) Start the engine (with air conditioning system also running). Fifteen seconds after the engine starts, place vehicle in gear.

(8) Twenty seconds after the engine starts, begin the initial vehicle acceleration of the driving schedule.

(9) Operate the vehicle according to the SC03 driving schedule.

(10) Turn the engine off 2 seconds after the end of the last deceleration (i.e., engine off at 596 seconds).

(11) Five seconds after the engine stops running, simultaneously turn off gas flow measuring device No. 1 (and the petroleum-fueled diesel hydrocarbon integrator No. 1 and mark the petroleum-fueled diesel hydrocarbon recorder chart if applicable) and position the sample selector valves to the ''standby'' position. Record the measured roll or shaft revolutions and the No. 1 gas meter reading or flow measurement instrument).

(12) As soon as possible, transfer the exhaust and dilution air bag samples to the analytical system and process the samples according to § 86.140 obtaining a stabilized reading of the bag exhaust sample on all analyzers within 20 minutes of the end of the sample collection phase of the test.

(13) Immediately after the end of the sample period, turn off the cooling fan, disconnect the exhaust tube from the vehicle tailpipe(s), and drive the vehicle from dynamometer.

(14) The CVS or CFV may be turned off, if desired.

(e) *NO_X humidity correction.* Calculated NO_X exhaust emissions from air conditioning tests conducted in an environmental test cell at a nominal 100 grains of water/pound of dry air are to be corrected for humidity to 100 grains of water/pound of dry air (see the relationship of § 86.164–00(d)).

[61 FR 54895, Oct. 22, 1996, as amended at 70 FR 40434, July 13, 2005; 70 FR 72928, Dec. 8, 2005]

§ 86.161–00 Air conditioning environmental test facility ambient requirements.

The goal of an air conditioning test facility is to simulate the impact of an ambient heat load on the power requirements of the vehicle's air conditioning compressor while operating on a specific driving cycle. The environmental facility control elements that are discussed are ambient air temperature and humidity, minimum test cell size, solar heating, and vehicle frontal air flow.

(a) *Ambient air temperature.* (1) Ambient air temperature is controlled, within the test cell, during all phases of the air conditioning test sequence to 95 ±2 °F on average and 95 ±5 °F as an instantaneous measurement.

(2) Air temperature is recorded continuously at a minimum of 30 second intervals. Records of cell air temperatures and values of average test temperatures are maintained by the manufacturer for all certification related programs.

(b) *Ambient humidity.* (1) Ambient humidity is controlled, within the test cell, during all phases of the air conditioning test sequence to an average of 100 ±5 grains of water/pound of dry air.

(2) Humidity is recorded continuously at a minimum of 30 second intervals. Records of cell humidity and values of average test humidity are maintained by the manufacturer for all certification related programs.

(c) *Minimum test cell size.* (1) The recommended minimum environmental exhaust emission test cell size is width 20 feet, length 40 feet, and height 10 feet.

(2) Test cells with smaller size dimensions may be approved by the Administrator if it can be shown that all of the ambient test condition performance requirements are satisfied.

(d) *Solar heat loading.* (1)(i) Acceptable types of radiant energy emitters that may be used for simulating solar heat load are:

(A) Metal halide;

(B) Quartz halogen with dichroic mirrors; and

(C) Sodium iodide.

(ii) The Administrator will approve other types of radiant energy emitters if the manufacturer can show they satisfy the requirements of this section.

(2) The height of the minimal cell size will dictate the type of radiant energy source that will satisfy the spectral distribution and uniformity definitions of this section.

(3) *Radiant energy specifications.* (i) Simulated solar radiant energy intensity is determined as an average of the two points measured at:

(A) Centerline of the test vehicle at the base of the windshield.

(B) Centerline of the vehicle at the base of the rear window (truck and van location defined as bottom of vertical window or where an optional window would be located).

(ii) The radiant energy intensity set point is 850 ±45 watts/square meter.

(iii) The definition of an acceptable spectral distribution is contained in the following table:

DEFINITION OF THE SPECTRAL DISTRIBUTION

Band width (nanometers)	Percent of total spectrum	
	Lower limit (percent)	Upper limit (percent)
<320	0	0
320–400	0	7
400–780	45	55
>780	35	53

NOTE: Filter the UV region between 280 and 320 wave lengths.

(iv) The angle of incidence of radiant energy is defined as 90 degrees from the test cell floor.

(v) The requirements for measuring the uniformity of radiant energy are:

(A) The radiant energy uniformity tolerance is ±15 percent of the radiant energy intensity set point of 850 watts/square meter.

(B) The uniformity of radiant energy intensity is measured at each point of a 0.5 meter grid over the entire footprint of the test vehicle at the elevation of one meter including the footprint edges.

(C) Radiant energy uniformity must be checked at least every 500 hours of emitter usage or every six months depending on which covers the shorter time period; and every time major changes in the solar simulation hardware occur.

(vi) The radiant energy intensity measurement instrument specifications (minimum) are:

(A) Sensitivity of 9 microvolts per watt/square meter;

(B) Response time of 1 second;

(C) Linearity of ±0.5 percent; and

(D) Cosine of ±1 percent from normalization 0–70 degree zenith angle.

(e) *Vehicle frontal air flow.* The Administrator will approve frontal air flow based on ''blower in box'' technology as an acceptable simulation of environmental air flow cooling for the air conditioning compressor and engine, provided the following requirements are satisfied.

(1) The minimum air flow nozzle discharge area must be equal or exceed the vehicle frontal inlet area. Optimum discharge area is 18 square feet (4.25 × 4.25), however, other sizes can be used.

(2) Air flow volumes must be proportional to vehicle speed. With the above optimum discharge size, the fan volume would vary from 0 cubic feet/minute (cfm) at 0 mph to approximately 95,000 cfm at 60 mph. If this fan is also the only source of cell air circulation or if fan operational mechanics make the 0 mph air flow requirement impractical, air flow of 2 mph or less will be allowed at 0 mph vehicle speed.

(3) The fan air flow velocity vector perpendicular to the axial flow velocity vector shall be less than 10 percent of the mean velocity measured at fan speeds corresponding to vehicle speeds of 20 and 40 mph.

(4)(i) Fan axial air flow velocity is measured two feet from nozzle outlet at each point of a one foot grid over the entire discharge area.

(ii) The uniformity of axial flow tolerance is 20 percent of the fan speeds corresponding to vehicle speeds of 20 and 40 mph.

(5) The instrument used to verify the air velocity must have an accuracy of 2 percent of the measured air flow speed.

(6) The fan discharge nozzle must be located 2 to 3 feet from the vehicle and 0 to 6 inches above the test cell floor during air conditioning testing. This applies to non-wind tunnel environmental test cells only.

(7) The design specifications discussed in paragraphs (e)(1) through (e)(5) of this section must be verified by the manufacturer prior to conducting certification air conditioning tests.

[61 FR 54897, Oct. 22, 1996, as amended at 70 FR 40434, July 13, 2005]

§ 86.162–03 Approval of alternative air conditioning test simulations.

(a) Upon petition from a manufacturer or upon the Agency's own initiative, the Administrator will approve a simulation of the environmental cell for air conditioning test (SC03) described in § 86.160–00 providing that the procedure can be run by the Administrator for SEA and in-use enforcement testing and providing that the following criteria are met:

(1) In deciding whether approvals will be granted, the Administrator will consider data showing how well the simulation matches environmental cell test data for the range of vehicles to be covered by the simulation including items such as the tailpipe emissions, air conditioning compressor load, and fuel economy.

(2) For any simulation approved under paragraph (a) of this section, the manufacturer must agree to be subject to an ongoing yearly correlation spot check as described in § 86.163–00.

(3) Once a simulation is approved and used by a manufacturer for testing for a given vehicle, EPA agrees to use the simulation test procedure for all official testing conducted on that vehicle by the Agency for certification, SEA, and recall purposes, excluding spot check testing and vehicles which fail the spot check criteria as described in § 86.163–00.

(4) EPA will moniter the aggregate results of spot check testing and full environmental test cells. If EPA determines, based on such aggregate results, that any simulation is producing test results consistantly below those from a full environmental test cell, EPA may review its approval of the simulation.

(b) [Reserved]

[61 FR 54899, Oct. 22, 1996]

§ 86.163–00 Spot check correlation procedures for vehicles tested using a simulation of the environmental test cell for air conditioning emission testing.

This section is applicable for vehicles which are tested using a simulation of the environmental test cell approved under the provisions of § 86.162–00(a).

(a) The Administrator may select up to five emission data vehicles (one emission data vehicle for small volume manufacturers), including vehicles submitted for running change approval, each model year for any manufacturer undergoing the spot checking procedures of this section.

(b) Testing conducted under this section (including testing performed in an environmental test cell) will be considered as official data as described in § 86.091–29 and used in determining compliance with the standards. Such testing must comply with all applicable emission standards of subpart A of this part. Retests for the purpose of emission compliance will be allowed using the procedures described in § 86.091–29.

(c) *Spot check procedures.* (1) Subject to the limitations of paragraphs (a) and (d)(2)(iii) of this section, the Administrator may require that one or more of the test vehicles which use a simulation rather than actual testing in an environmental test cell for air conditioning emission testing be submitted at a place the Administrator will designate for air conditioning emission testing in an environmental test cell as described in § 86.160–00. The Administrator may order this testing to be conducted at a manufacturer facility. All manufacturers which use a simulation instead of environmental cell testing must have access to an environment test cell meeting the requirements of § 86.161–00 to perform this testing.

(2) An air conditioning emission test will be performed as described in § 86.162–00 in a full environmental test cell.

(i) The results of the original simulation test and the full environmental test cell required in paragraph (c)(1) of this section are compared. In order to pass the spot check, the test results must pass both the following two criteria:

(A) The NO_X emission results of the simulation test must be at least 85% of the NO_X emission results of the environmental chamber test.

(B) The fuel consumption of the simulation test must be at least 95% of the fuel consumption of the environmental chamber test.

(ii) If either of two criteria of paragraph (c)(2)(i) of this section were not met, a retest is allowed. The manufacturer may elect to conduct either a retest of the simulation procedure or the environmental chamber testing. In order to pass the spot check, the test results must pass both the following two criteria using the retest test result.

(A) The NO_X emission results of the simulation test must be at least 85% of the NO_X emission results of the environmental chamber test.

(B) The fuel consumption of the simulation test must be at least 95% of the fuel consumption of the environmental chamber test.

(iii) If either of the two criteria of paragraph (c)(2)(ii) of this section were not met, a second retest is allowed. The procedure not selected for the first retest must be used for the second retest, yielding two test results for each procedure. In order to pass the spot check, the test results must pass both the following two criteria using the average test result for each procedure:

(A) The NO_X emission results of the simulation test must be at least 85% of the NO_X emission results of the environmental chamber test.

(B) The fuel consumption of the simulation test must be at least 95% of the fuel consumption of the environmental chamber test.

(iv) If the spot check criteria have not passed after any of the initial test, the first retest, or the second retest the spot check is considered failed.

(d) *Consequences of failing a spot check.* (1) If the emission results of the testing using the environmental test chamber passes all the applicable standards, those test results may be used to obtain a certificate of conformity.

(2) The Administrator will allow up to 60 days for the manufacturer to supply additional data addressing the correlation of the simulation with a full environmental test cell.

(i) If that data prove to the satisfaction of the Administrator that the simulation produces results that correlate sufficiently with the environmental test chamber, the Administrator may allow the continued use of the simulation.

(ii) Otherwise, the Administrator will determine that the simulation fails to meet adequate correlation levels with full environmental testing. As a consequence of this finding, all future air conditioning emission testing on the population of vehicles represented by the failing-spot-check test vehicle (which may include past model year configurations) will be conducted using an environment chamber or a different (or corrected) approved simulation procedure.

(iii) For each vehicle that fails a spot check, the Administrator may select up to two additional vehicles to test for the spot check that do not count against the five vehicle limit of paragraph (a) of this section.

(e) EPA will monitor the aggregate results of spot check testing and full environmental test cells. If EPA determines, based on such aggregate results, that any simulation (other than the AC1 and AC2 procedures described in paragraphs (b) and (c) of this section for the 2000, 2001, and 2002 model years) is producing test results consistently below those from a full environmental test cell, EPA may review its approval of the simulation.

[61 FR 54899, Oct. 22, 1996]

§ 86.164–00 Supplemental Federal Test Procedure calculations.

(a) The provisions of § 86.144–94 (b) and (c) are applicable to this section except that the NO_X humidity correction factor of § 86.144–94(c)(7)(iv) must be modified when adjusting SC03 environmental test cell NO_X results to 100 grains of water (see paragraph (d) of this section). These provisions provide the procedures for calculating mass emission results of each regulated exhaust pollutant for the test schedules of FTP, US06, and SC03.

(b) The provisions of § 86.144–94(a) are applicable to this section. These provisions provide the procedures for determining the weighted mass emissions for the FTP test schedule (Y_{wm}).

(c)(1) When the test vehicle is equipped with air conditioning, the final reported test results for the SFTP composite (NMHC + NO_X) and optional composite CO standards shall be computed by the following formulas.

(i) $Y_{WSFTP} = 0.35(Y_{FTP}) + 0.37(Y_{SC03}) + 0.28(Y_{US06})$

Where:

(A) Y_{WSFTP} = Mass emissions per mile for a particular pollutant weighted in terms of the contributions from the FTP, SC03, and US06 schedules. Values of Y_{WSFTP} are obtained for each of the exhaust emissions of NMHC, NO_X. and CO.

(B) Y_{FTP} = Weighted mass emissions per mile (Ywm) based on the measured driving distance of the FTP test schedule.

(C) Y_{SC03} = Calculated mass emissions per mile based on the measured driving distance of the SC03 test schedule.

(D) Y_{US06} = Calculated mass emissions per mile based on the measured driving distance of the US06 test schedule.

(ii) Composite (NMHC = NO_X) + Y_{WSFTP}(NMHC) $W_{SFTP}(NO_X)$

Where:

(A) Y_{WSFTP}(NMHC) = results of paragraph (c)(1)(i) of this section for NMHC.

(B) $Y_{WSFTP}(NO_X)$ = results of paragraph (c)(1)(i) of this section for NO_X.

(2) When the test vehicle is not equipped with air conditioning, the relationship of paragraph (c)(1)(i) of this section is:

(i) $Y_{WSFTP} = 0.72(Y_{FTP}) + 0.28(Y_{US06})$

Where:

(A) Y_{WSFTP} = Mass emissions per mile for a particular pollutant weighted in terms of the contributions from the FTP and US06 schedules. Values of Y_{WSFTP} are obtained for each of the exhaust emissions of NMHC, NO_X. and CO.

(B) Y_{FTP} = Weighted mass emissions per mile (Ywm) based on the measured driving distance of the FTP test schedule.

(C) Y_{US06} = Calculated mass emissions per mile based on the measured driving distance of the US06 test schedule.

(ii) Composite (NMHC + NO_X) = Y_{WSFTP}(NMHC) + Y_{WSFTP}(NO_X)

Where:

(A) Y_{WSFTP}(NMHC) = results of paragraph (c)(2)(i) of this section for NMHC.

(B) Y_{WSFTP}(NO_X) = results of paragraph (c)(2)(i) of this section for NO_X.

(d) The NO_X humidity correction factor for adjusting NO_X test results to the environmental test cell air conditioning ambient condition of 100 grains of water/pound of dry air is:

K_H (100) = 0.8825/[1–0.0047(H–75)]

Where:

H = measured test humidity in grains of water/pound of dry air.

[61 FR 54900, Oct. 22, 1996, as amended at 70 FR 40434, July 13, 2005]

§ 86.164–08 Supplemental Federal Test Procedure calculations.

(a) The provisions of § 86.144–94 (b) and (c) are applicable to this section except that the NO_X humidity correction factor of § 86.144–94(c)(7)(iv) must be modified when adjusting SC03 environmental test cell NO_X results to 100 grains of water according to paragraph (d) of this section. These provisions provide the procedures for calculating mass emission results of each regulated exhaust pollutant for the test schedules of FTP, US06, and SC03.

(b) The provisions of § 86.144–94(a) are applicable to this section. These provisions provide the procedures for determining the weighted mass emissions for the FTP test schedule (Y_{wm}).

(c)(1) When the test vehicle is equipped with air conditioning, the final reported test results for the SFTP composite (NMHC + NO_X) and optional composite CO standards shall be computed by the following formulas.

(i) Y_{WSFTP} = 0.35(Y_{FTP}) + 0.37(Y_{SC03}) + 0.28(Y_{US06})

Where:

(A) Y_{WSFTP} = Mass emissions per mile for a particular pollutant weighted in terms of the contributions from the FTP, SC03, and US06 schedules. Values of Y_{WSFTP} are obtained for each of the exhaust emissions of NMHC, NO_X and CO.

(B) Y_{FTP} = Weighted mass emissions per mile (Y_{WM}) based on the measured driving distance of the FTP test schedule.

(C) Y_{SC03} = Calculated mass emissions per mile based on the measured driving distance of the SC03 test schedule.

(D)(*1*) Y_{US06} = Calculated mass emissions per mile based on the measured driving distance of the US06 test schedule; or,

(*2*) In the case of a 2-phase US06 test run according to the provisions of § 86.159–08(f)(2) and part 600 of this chapter:

YUS06 = Calculated mass emissions per mile, using the summed mass emissions of the ''US06 City'' phase and the ''US06 Highway'' phase, based on the measured driving distance of the US06 test schedule. The ''US06 City'' phase shall be sampled during seconds 0–130 and from 495 seconds until five seconds after the engine stops running (*e.g.* 602 or 603 seconds) of the US06 driving schedule. The ''US06 Highway'' phase shall be sampled during seconds 130–495 of the US06 driving schedule),

(ii) Composite (NMHC + NO_X) = Y_{WSFTP}(NMHC) + Y_{WSFTP}(NO_X)

Where:

(A) Y_{WSFTP}(NMHC) = results of paragraph (c)(1)(i) of this section for NMHC.

(B) Y_{WSFTP}(NO_X) = results of paragraph (c)(1)(i) of this section for NO_X.

(2) When the test vehicle is not equipped with air conditioning, the final reported test results for the SFTP composite (NMHC + NO_X) and optional composite CO standards shall be computed by the following formulas.

(i) Y_{WSFTP} = 0.72(Y_{FTP}) + 0.28(Y_{US06})

Where:

(A) Y_{WSFTP} = Mass emissions per mile for a particular pollutant weighted in terms of the contributions from the FTP and US06 schedules. Values of Y_{WSFTP} are obtained for each of the exhaust emissions of NMHC, NO_X and CO.

(B) Y_{FTP} = Weighted mass emissions per mile (Ywm) based on the measured driving distance of the FTP test schedule.

(C)(*1*) Y_{US06} = Calculated mass emissions per mile based on the measured driving distance of the US06 test schedule; or,

(*2*) In the case of a 2-phase US06 test run according to the provisions of § 86.159–08(f)(2) and part 600 of this chapter:

YUS06 = Calculated mass emissions per mile, using the summed mass emissions of the ''US06 City'' phase and the ''US06 Highway'' phase, based on the measured driving distance of the US06 test schedule. The ''US06 City'' phase shall be sampled during seconds 0–130 and from 495 seconds until five seconds after the engine stops running (*e.g.* 602 or 603 seconds) of the US06 driving schedule. The ''US06 Highway'' phase shall be sampled during seconds 130–495 of the US06 driving schedule),

(ii) Composite (NMHC + NO_X) = Y_{WSFTP}(NMHC) + Y_{WSFTP}(NO_X)

Where:

(A) Y_{WSFTP}(NMHC) = results of paragraph (c)(2)(i) of this section for NMHC.

(B) Y_{WSFTP}(NO_X) = results of paragraph (c)(2)(i) of this section for NO_X.

(d) The NO_X humidity correction factor for adjusting NO_X test results to the environmental test cell air conditioning ambient condition of 100 grains of water/pound of dry air is:

$$K_H\ (100) = 0.8825/[1–0.0047(H–75)]$$

Where:

H = measured test humidity in grains of water/pound of dry air.

[71 FR 77922, Dec. 27, 2006, as amended at 74 FR 61548, Nov. 25, 2009]

§ 86.165–12 Air conditioning idle test procedure.

(a) *Applicability*. This section describes procedures for determining air conditioning-related CO_2 emissions from light-duty vehicles, light-duty trucks, and medium-duty passenger vehicles. The results of this test are used to qualify for air conditioning efficiency CO_2 credits according to § 86.1866–12(c).

(b) *Overview*. The test consists of a brief period to stabilize the vehicle at idle, followed by a ten-minute period at idle when CO_2 emissions are measured without any air conditioning systems operating, followed by a ten-minute period at idle when CO_2 emissions are measured with the air conditioning system operating. This test is designed to determine the air conditioning-related CO_2 emission value, in grams per minute. If engine stalling occurs during cycle operation, follow the provisions of § 86.136–90 to restart the test. Measurement instruments must meet the specifications described in this subpart.

(c) *Test cell ambient conditions*. (1) Ambient humidity within the test cell during all phases of the test sequence shall be controlled to an average of 40–60 grains of water/pound of dry air.

(2) Ambient air temperature within the test cell during all phases of the test sequence shall be controlled to 73–80 °F on average and 75 ±5 °F as an instantaneous measurement. Air temperature shall be recorded continuously at intervals of not more than 30 seconds.

(d) *Test sequence*. (1) Connect the vehicle exhaust system to the raw sampling location or dilution stage according to the provisions of this subpart. For dilution systems, dilute the exhaust as described in this subpart. Continuous sampling systems must meet the specifications provided in this subpart.

(2) Test the vehicle in a fully warmed-up condition. If the vehicle has soaked for two hours or less since the last exhaust test element, preconditioning may consist of a 505 Cycle, 866 Cycle, US06, or SC03, as these terms are defined in § 86.1803–01, or a highway fuel economy test procedure, as defined in § 600.002–08 of this chapter. For soak periods longer than two hours, precondition the vehicle using one full Urban Dynamometer Driving Schedule. Ensure that the vehicle has stabilized at test cell ambient conditions such that the vehicle interior temperature is not substantially different from the external test cell temperature. Windows may be opened during preconditioning to achieve this stabilization.

(3) Immediately after the preconditioning, turn off any cooling fans, if present, close the vehicle's hood, fully close all the vehicle's windows, ensure that all the vehicle's air conditioning systems are set to full off, start the CO_2 sampling system, and then idle the vehicle for not less than 1 minute and not more than 5 minutes to achieve normal and stable idle operation.

(4) Measure and record the continuous CO_2 concentration for 600 seconds. Measure the CO_2 concentration continuously using raw or dilute sampling procedures. Multiply this concentration by the continuous (raw or dilute)

flow rate at the emission sampling location to determine the CO_2 flow rate. Calculate the CO_2 cumulative flow rate continuously over the test interval. This cumulative value is the total mass of the emitted CO_2. Alternatively, CO_2 may be measured and recorded using a constant velocity sampling system as described in §§ 86.106–96(a)(2) and 86.109.

(5) Within 60 seconds after completing the measurement described in paragraph (d)(4) of this section, turn on the vehicle's air conditioning system. Set automatic air conditioning systems to a temperature 9 °F (5 °C) below the ambient temperature of the test cell. Set manual air conditioning systems to maximum cooling with recirculation turned off, except that recirculation shall be enabled if the air conditioning system automatically defaults to a recirculation mode when set to maximum cooling. Continue idling the vehicle while measuring and recording the continuous CO_2 concentration for 600 seconds as described in paragraph (d)(4) of this section. Air conditioning systems with automatic temperature controls are finished with the test after this 600 second idle period. Manually controlled air conditioning systems must complete one additional idle period as described in paragraph (d)(6) of this section.

(6) This paragraph (d)(6) applies only to manually controlled air conditioning systems. Within 60 seconds after completing the measurement described in paragraph (d)(5) of this section, leave the vehicle's air conditioning system on and set as described in paragraph (d)(5) of this section but set the fan speed to the lowest setting that continues to provide air flow. Recirculation shall be turned off except that if the system defaults to a recirculation mode when set to maximum cooling and maintains recirculation with the low fan speed, then recirculation shall continue to be enabled. After the fan speed has been set, continue idling the vehicle while measuring and recording the continuous CO_2 concentration for a total of 600 seconds as described in paragraph (d)(4) of this section.

(e) *Calculations*. (1) For the measurement with no air conditioning operation, calculate the CO_2 emissions (in grams per minute) by dividing the total mass of CO_2 from paragraph (d)(4) of this section by 10.0 (the duration in minutes for which CO_2 is measured). Round this result to the nearest tenth of a gram per minute.

(2)(i) For the measurement with air conditioning in operation for automatic air conditioning systems, calculate the CO_2 emissions (in grams per minute) by dividing the total mass of CO_2 from paragraph (d)(5) of this section by 10.0. Round this result to the nearest tenth of a gram per minute.

(ii) For the measurement with air conditioning in operation for manually controlled air conditioning systems, calculate the CO_2 emissions (in grams per minute) by summing the total mass of CO_2 from paragraphs (d)(5) and (d)(6) of this section and dividing by 20.0. Round this result to the nearest tenth of a gram per minute.

(3) Calculate the increased CO_2 emissions due to air conditioning (in grams per minute) by subtracting the results of paragraph (e)(1) of this section from the results of paragraph (e)(2)(i) or (ii) of this section, whichever is applicable.

(f) The Administrator may prescribe procedures other than those in this section for air conditioning systems and/or vehicles that may not be susceptible to satisfactory testing by the procedures and methods in this section. For example, the Administrator may prescribe alternative air conditioning system settings for systems with controls that are not able to meet the requirements in this section.

[75 FR 25680, May 7, 2010, as amended at 76 FR 39521, July 6, 2011; 77 FR 63152, Oct. 15, 2012]

§ 86.166–12 [Reserved]

Subpart C—Emission Regulations for 1994 and Later Model Year Gasoline-Fueled New Light-Duty Vehicles, New Light-Duty Trucks and New Medium-Duty Passenger Vehicles; Cold Temperature Test Procedures

SOURCE: 79 FR 23698, Apr. 28, 2014, unless otherwise noted.

§ 86.201 General applicability.

(a) Vehicles are subject to cold temperature testing requirements as described in subpart S of this part and 40 CFR part 600.

(b) *Migration to 40 CFR parts 1065 and 1066*. This subpart transitions to rely on the test procedure specifications in 40 CFR parts 1065 and 1066 as follows:

(1) Through model year 2021, manufacturers may use the test procedures specified in paragraph (c) or (d) of this section or, using good engineering judgement, elements of both. For any EPA testing before model year 2022, EPA will use the manufacturer's selected procedures for applying acceptable speed-tolerance criteria. For any other parameters, EPA may conduct testing using either of the specified procedures. As allowed under this part, manufacturers may use carryover data from previous model years to demonstrate compliance with emission standards, without regard to the provisions of this section.

(2) For vehicles certified before model year 2022 to any of the Tier 3 emission standards specified in subpart S of this part, manufacturers must determine overall driver accuracy based on driven cycle energy as described in 40 CFR 1066.425(j).

(c) *Interim procedures*. Through model year 2021, manufacturers may certify vehicles based on data collected according to previously published cold temperature and intermediate temperature testing procedures.

(d) *Long-term procedures*. Starting in model year 2022, perform testing to measure CO and NMHC emissions and determine fuel economy as described in 40 CFR part 1066; see especially 40 CFR 1066.710. We may approve the use of previously published cold temperature and intermediate temperature testing procedures for later model years as an alternative procedure under 40 CFR 1066.10(c). Perform intermediate temperature testing as follows:

(1) For testing during ambient temperatures of less than 50 °F (10 °C), perform testing as described in 40 CFR part 1066, subpart H.

(2) For testing at temperatures of 50 °F (10 °C) or higher, perform FTP testing as described in 40 CFR part 1066.

(e) Section 86.213 describes special provisions related to test fuel specifications.

[80 FR 9103, Feb. 19, 2015]

§ 86.213 Fuel specifications.

(a) *Gasoline*. Use a gasoline test fuel with ethanol (low-level blend only) or without ethanol as follows:

(1) You must certify using service accumulation fuel and E10 test fuel as specified in § 86.113 for any vehicles required to use a low-level ethanol-gasoline blend test fuel for measuring exhaust emissions. You may use this test fuel any time earlier than we specify.

(2) You may use the test fuel specified in this paragraph (a)(2) for vehicles that are not yet subject to exhaust testing with an ethanol-blend test fuel under § 86.113. Manufacturers may certify based on this fuel using carryover data until testing with the ethanol-blend test fuel is required. The following specifications apply for gasoline test fuel without ethanol:

TABLE 1 OF § 86.213—COLD TEMPERATURE TEST FUEL SPECIFICATIONS FOR GASOLINE WITHOUT ETHANOL

Item	Regular	Premium	Reference procedure [1]
(RON + MON)/2 [2]	87.8±0.3	92.3±0.5	ASTM D2699; ASTM D2700
Sensitivity [3]	7.5	7.5	ASTM D2699; ASTM D2700
Distillation Range (°F):			
Evaporated initial boiling point	76–96	76–96	ASTM D86
10% evaporated	98–118	105–125.	
50% evaporated	179–214	195–225.	
90% evaporated	316–346	316–346.	
Evaporated final boiling point	413 Maximum	413 Maximum.	
Hydrocarbon composition (vol %):			
Olefins	12.5±5.0	10.5±5.0	ASTM D1319
Aromatics	26.4±4.0	32.0±4.0.	
Saturates	Remainder	Remainder.	
Lead, g/gallon	0.01, Maximum	0.01, Maximum	ASTM D3237

TABLE 1 OF § 86.213—COLD TEMPERATURE TEST FUEL SPECIFICATIONS FOR GASOLINE WITHOUT ETHANOL—Continued

Item	Regular	Premium	Reference procedure [1]
Phosphorous, g/gallon	0.005, Maximum	0.005, Maximum	ASTM D3231
Total sulfur, wt. % [3]	0.0015–0.008	0.0015–0.008	ASTM D2622
RVP, psi	11.5±0.3	11.5±0.3	ASTM D5191

[1] ASTM procedures are incorporated by reference in § 86.1.
[2] Octane specifications are optional for manufacturer testing. The premium fuel specifications apply for vehicles designed to use high-octane premium fuel.
[3] Sulfur concentration will not exceed 0.0045 weight percent for EPA testing.

(3) Manufacturers may use the E0 gasoline test fuel specified in § 86.113 for certification instead of the fuel specified in paragraph (a)(2) of this section, as long as the change in test fuel does not cause cold temperature NMHC, CO, or CO_2 emissions to decrease; manufacturers must keep records documenting these emission effects and make them available to EPA upon request.

(4) We may approve alternate fuel specifications that are substantially equivalent to those in paragraph (a)(2) of this section for a manufacturer's testing.

(b) *Diesel fuel.* Diesel fuel for testing under this subpart must meet the specifications for low-temperature test fuel in 40 CFR 1065.703.

[79 FR 23698, Apr. 28, 2014, as amended at 80 FR 9103, Feb. 19, 2015]

Subpart D [Reserved]

Subpart E—Emission Regulations for 1978 and Later New Motorcycles, General Provisions

SOURCE: 42 FR 1126, Jan. 5, 1977, unless otherwise noted.

§ 86.401–2006 General applicability.

This subpart applies to 1978 and later model year, new, gasoline-fueled motorcycles built after December 31, 1977, and to 1990 and later model year, new methanol-fueled motorcycles built after December 31, 1989 and to 1997 and later model year, new natural gas-fueled and liquefied petroleum gas-fueled motorcycles built after December 31, 1996 and to 2006 and later model year new motorcycles, regardless of fuel.

[69 FR 2435, Jan. 15, 2004]

§ 86.401–97 General applicability.

(a) This subpart applies to 1978 and later model year, new, gasoline-fueled motorcycles built after 31 December, 1977, and to 1990 and later model year, new, methanol-fueled motorcycles built after 31 December, 1989 and to 1997 and later model year, new, natural gas-fueled and liquefied petroleum gas-fueled motorcycles built after 31 December, 1996.

(b) Motorcycles with engine displacements less than 50 cc (3.1 cu in) are excluded from the requirements of this subpart.

(c) Motorcycles are excluded from the requirements of this subpart, if with an 80 kg (176 lb) driver, it cannot:

(1) Start from a dead stop using only the engine; or

(2) Exceed a maximum speed of 40 km/h (25 mph) on level paved surfaces.

[59 FR 48512, Sept. 21, 1994]

§ 86.402–78 Definitions.

(a) The definitions in this section apply to this subpart and also to subpart F.

Act means part A of title II of the Clean Air Act, 42 U.S.C. 1857 f–1 through f–7, as amended by Pub. L. 91–604.

Administrator means the Administrator of the Environmental Protection Agency or his authorized representative.

Class, see § 86.419.

Crankcase emissions means airborne substances emitted to the atmosphere from any portion of the engine crankcase ventilation or lubrication systems.

Curb mass means the actual or manufacturer's estimated mass of the vehicle with fluids at nominal capacity and

with all equipment specified by the Administrator.

Displacement, and *Displacement Class*, see § 86.419.

Engine family means the basic classification unit of a manufacturer's product line used for the purpose of test fleet selection and determined in accordance with § 86.420.

Engine-displacement-system combination means an engine family-displacement-emission control system combination.

EPA Enforcement Officer means any officer or employee of the Environmental Protection Agency so designated in writing by the Administrator (or by his designee).

Exhaust emissions means substances emitted to the atmosphere from any opening downstream from the exhaust port of a motor vehicle engine.

Fuel system means the combination of fuel tank, fuel pump, fuel lines, oil injection metering system, and carburetor or fuel injection components, and includes all fuel system vents.

Loaded vehicle mass means curb mass plus 80 kg (176 lb.), average driver mass.

Model year means the manufacturer's annual production period (as determined by the Administrator) which includes January first of such calendar year. If the manufacturer has no annual production period, the term *model year* shall mean the calendar year.

Motorcycle means any motor vehicle with a headlight, taillight, and stoplight and having: Two wheels, or Three wheels and a curb mass less than or equal to 680 kilograms (1499 pounds).

Oxides of nitrogen means the sum of the nitric oxide and nitrogen dioxide contained in a gas sample as if the nitric oxide were in the form of nitrogen dioxide.

Round has the meaning given in 40 CFR 1065.1001, unless otherwise specified.

Scheduled maintenance means any adjustment, repair, removal, disassembly, cleaning, or replacement of vehicle components or systems which is performed on a periodic basis to prevent part failure or vehicle malfunction, or anticipated as necessary to correct an overt indication of vehicle malfunction or failure for which periodic maintenance is not appropriate.

Span gas means a gas of known concentration which is used routinely to set the output level of any analyzer.

System includes any motor vehicle modification which controls or causes the reduction of substances emitted from motor vehicles.

Total test distance is defined for each class of motorcycles in § 86.427–78.

Useful life is defined for each class (see § 86.419) of motorcycle:

Class I—5.0 years or 12,000 km (7,456 miles), whichever first occurs.
Class II—5.0 years or 18,000 km (11,185 miles), whichever first occurs.
Class III—5.0 years or 30,000 km (18,641 miles), whichever first occurs.

Unscheduled maintenance means any inspection, adjustment, repair, removal, disassembly, cleaning, or replacement of vehicle components or systems which is performed to correct or diagnose a part failure or vehicle malfunction which was not anticipated.

Zero kilometers means that point after normal assembly line operations and adjustments, after normal dealer setup and preride inspection operations have been completed, and before 100 kilometers of vehicle operation of three hours of engine operation have been accumulated, including emission testing if performed.

(b) [Reserved]

[42 FR 1126, Jan. 5, 1977, as amended at 42 FR 56737, Oct. 28, 1977; 49 FR 48138, Dec. 10, 1984; 81 FR 73979, Oct. 25, 2016]

§ 86.402–98 Definitions.

The definitions of § 86.402–78 apply to this subpart. The following definition in this section is applicable beginning with the 1998 model year:

Designated Compliance Officer means the Manager, Engine Programs Group (6405–J), U.S. Environmental Protection Agency, 1200 Pennsylvania Ave., Washington, DC 20460.

Motorcycle means any motor vehicle with a headlight, taillight, and stoplight and having: Two wheels, or Three wheels and a curb mass less than or equal to 793 kilograms (1749 pounds).

Motor vehicle has the meaning we give in 40 CFR 85.1703.

Useful life is defined for each class (see § 86.419) of motorcycle:

(1) Class I-A—5.0 years or 6,000 km (3,728 miles), whichever occurs first.

(2) Class I-B—5.0 years or 12,000 km (7,456 miles), whichever occurs first.

(3) Class II—5.0 years or 18,000 km (11,185 miles), whichever occurs first.

(4) Class III—5.0 years or 30,000 km (18,641 miles), whichever occurs first.

[63 FR 11849, Mar. 11, 1998, as amended at 69 FR 2435, Jan. 15, 2004]

§ 86.403–78 Abbreviations.

The abbreviations used in this subpart have the following meanings in both capital and lowercase:

ASTM—American Society for Testing and Materials.
C—Celsius.
cc—Cubic centimetre(s).
cfh—Cubic feet per hour.
cfm—Cubic feet per minute.
CH_4 methane.
cm—Centimetre(s).
CO—Carbon monoxide.
CO_2—Carbon dioxide.
Conc—Concentration.
cu.—Cubic.
CVS—Constant volume sampler.
EGR—Exhaust gas recirculation.
EP—End point.
EPA—Environmental Protection Agency.
F—Fahrenheit.
h—hour.
HC—Hydrocarbon(s).
Hg—Mercury.
H_2O—Water.
in.—Inch(es).
K—Kelvin.
kg—Kilogram(s).
km—Kilometre(s).
kpa—Kilopascals.
lb—Pound(s).
m—Metre(s).
mph—Miles per hour.
mm—Millimetre(s).
N_2—Nitrogen.
N_2O nitrous oxide.
NO_x—Oxides of nitrogen.
No.—Number.
O_2—Oxygen.
Pa—Pascal(s).
Pb—lead.
ppm—Parts per million by volume.
psi—Pounds per square inch.
psig—Pounds per square inch gauge.
R—Rankine.
rpm—Revolutions per minute.
wt—Weight.
°—Degree(s).
%—Percent.

[42 FR 1126, Jan. 5, 1977, as amended at 74 FR 56373, Oct. 30, 2009]

§ 86.404–78 Section numbering.

(a) The year of initial applicability of a section is indicated by its section number. The two digits following the hyphen designate the first model year for which a section is effective. A section remains effective until superseded.

Example: Section 86.411–78 applies to 1978 and subsequent model years until it is superseded. If a § 86.411–81 is promulgated it would take effect beginning with 1981; § 86.411–78 would apply to years 1978 through 1980.

(b) A reference to a section without a year designation implies the appropriate model year.

Example: When considering 1979 vehicles a reference to § 86.411 implies § 86.411–79. However if no § 86.411–79 has been promulgated then § 86.411–78 is implied; See paragraph (a) of this section.

§ 86.405–78 Measurement system.

(a) This subpart and subpart F have been written using System International (SI) units. SI units will be used to determine compliance with these regulations. English equivalents have been indicated solely for the user's convenience.

(b) [Reserved]

§ 86.406–78 Introduction, structure of subpart, further information.

(a) This subpart contains general provisions regulating the emission of air pollution from new motorcycles. Test procedures are found in subpart F.

(b) Several discrete concepts are addressed:

(1) *Requirements*. Sections 86.407 to 86.415.

(2) *Application for certification*. Sections 86.416 and 86.417.

(3) *Test fleet selection*. Sections 86.418 to 86.423.

(4) *Service accumulation, testing, maintenance, certification*. Sections 86.424 to 86.439.

(5) *Administrative provisions*. Sections 86.440 to 86.444.

(c) The certification procedure to be followed depends upon the manufacturer's projected sales.

(1) New motorcycles, produced by a manufacturer whose projected U.S. sales of motorcycles is 10,000 or more units (for the model year in which certification is sought) shall demonstrate

compliance with all general standards and all specific emission requirements before they can be sold in the United States. The manufacturer is required to submit an application with sales data, product information, required maintenance, testing and service accumulation procedures. The Administrator will select vehicle(s) which will represent the manufacturer's product line. The manufacturer is required to construct these vehicles to be representative of actual production. Service is accumulated and emission tests performed with data submitted to the Administrator. The Administrator may run his own tests to confirm the manufacturer's results. The Administrator will review the data and either grant or deny certification. If the manufacturer wishes to make changes to a certified vehicle, or to produce a new vehicle, the Administrator must be notified. The Administrator may require testing to demonstrate continued compliance with emission standards. Each vehicle must be labeled with tune up specifications and the purchaser must be supplied with maintenance instructions. Also, information on production vehicles must be supplied to the Administrator.

(2) New motorcycles produced by a manufacturer whose projected U.S. sales of motorcycles is less than 10,000 units (for the model year in which certification is sought) shall meet both the general standards and specific emission requirements described in §§ 86.401 through 86.417, § 86.425, § 86.437, and §§ 86.440 through 86.444 of this subpart before they can be sold in the United States. The manufacturer is required to submit an application containing a statement that his vehicles conform to the applicable emission standards. The manufacturer is required to retain in his records, but not submit with the application, valid emission test data which support his statement. The Administrator will review the application and either grant or deny certification. Each vehicle must be labeled with tune up specifications and the purchaser must be supplied with maintenance instructions. Also, information on production vehicles must be supplied to the Administrator.

(d) Manufacturers who are considering an application should contact: Director, Vehicle Programs and Compliance Division, Environmental Protection Agency, 2565 Plymouth Rd., Ann Arbor, Michigan 48105 and state whether he/she plans to certify for total sales of greater than or less than 10,000 vehicles for the applicable model year.

[42 FR 1126, Jan. 5, 1977, as amended at 63 FR 11849, Mar. 11, 1998]

§ 86.407–78 Certificate of conformity required.

(a) *General requirement.* Every new motorcycle manufactured for sale, sold, offered for sale, introduced or delivered for introduction into commerce, or imported into the United States which is subject to any of the standards prescribed in this subpart is required to be covered by a certificate of conformity issued pursuant to this subpart, except as specified in paragraph (b) of this section, or otherwise exempted from this requirement.

(b) *Interim personal use exemption.* An individual may manufacture one motorcycle for personal use without a certificate of conformity, subject to the following provisions:

(1) The motorcycle may not be manufactured from a certified motorcycle. The motorcycle may not be manufactured from a partially complete motorcycle that is equivalent to a certified motorcycle, unless the emission controls are included in the final product. The motorcycle must be manufactured primarily from unassembled components, but may incorporate some preassembled components. For example, fully preassembled transmissions may be used.

(2) The motorcycle may not be sold within five years of the date of final assembly.

(3) No individual may manufacture more than one motorcycle during his or her lifetime under this exemption. This restriction applies with respect to the person who purchases the components and/or uses the motorcycle, rather than to the person(s) who actually assemble(s) the motorcycle.

(4) This exemption may not be used to circumvent the requirements of

paragraph (a) of this section or the requirements of the Clean Air Act. For example, this exemption would not cover a case in which an entity purchases a kit, assembles the kit, and then sells it to another party; this would be considered to be the sale of the complete motorcycle.

(c) *Interim display exemptions.* Uncertified custom motorcycles that are used solely for display purposes are exempt from the standards provided they conform to the requirements of this paragraph (c). Unless a certificate of conformity has been received for such motorcycles, they may not be operated on the public streets or highways except for that operation incident and necessary to the display purpose.

(1) No request is necessary for display motorcycles that will not be sold or leased.

(2) The following requirements apply for exempting display motorcycles that will be sold or leased:

(i) Manufacturers planning to sell motorcycles for display must notify EPA of their intent to do so before they sell any exempted motorcycles. They must also maintain sales records of exempted motorcycles for at least three years and make them available to EPA upon request.

(ii) No manufacturer may sell or lease more than 24 exempted display motorcycles in any single calendar year.

(iii) Anyone selling or leasing a motorcycle exempt under this paragraph (c) must ensure that the buyer or lessee agrees to comply with the display exemption terms in the regulations.

(3) Each motorcycle exempt under this paragraph (c) must include a label that identifies the manufacturer and includes the following statement: THIS MOTORCYCLE IS EXEMPT FROM EPA EMISSION REQUIREMENTS. ITS USE ON PUBLIC ROADS IS LIMITED PURSUANT TO 40 CFR 86.407–78(c). EPA may allow manufacturers to locate the label in a location where it is obscured or hidden by a readily removable component. For example, EPA may allow the label to be located under the seat.

(4) As described in 40 CFR part 1051, motorcycles that are not considered to be motor vehicles according to 40 CFR 85.1703(a) may be exempt under this paragraph (c) from the standards and requirements of 40 CFR part 1051. Such motorcycles shall be combined with the manufacturer's highway motorcycles with respect to the sales restriction described in paragraph (c)(2)(ii) of this section.

(5) This exemption may not be used to circumvent the requirements of paragraph (a) of this section or the requirements of the Clean Air Act.

[69 FR 2435, Jan. 15, 2004]

§ 86.408–78 General standards; increase in emissions; unsafe conditions.

(a) Any system installed on or incorporated in a new motorcycle to enable such vehicle to conform to standards imposed by this subpart:

(1) Shall not in its operation or function cause the emission into the ambient air of any noxious or toxic substance that would not be emitted in the operation of such vehicle without such system, except as specifically permitted by regulation; and

(2) Shall not in its operation, function, or malfunction result in any unsafe condition endangering the motorcycle, its rider(s), or persons or property in close proximity to the vehicle.

(b) Every manufacturer of new motorcycles subject to any of the standards imposed by this subpart shall, prior to taking any of the actions specified in section 203(a)(1) of the Act, test or cause to be tested motorcycles in accordance with good engineering practice to ascertain that such test vehicles will meet the requirements of this section for the useful life of the vehicle.

§ 86.409–78 Defeat devices, prohibition.

(a) No motorcycle shall be equipped with a defeat device.

(b) Defeat device means any element of design which:

(1) Senses temperature, vehicle speed, engine RPM, transmission gear, manifold vacuum, or any other parameter for the purpose of activating, modulating, delaying or deactivating the operation of any part of the emission control system and

(2) Reduces the effectiveness of the emission control system under conditions which may reasonably be expected to be encountered in normal urban vehicle operation and use, unless

(i) Such conditions are substantially included in the Federal emission test procedure, or

(ii) The need for the device is justified in terms of protecting the vehicle against damage or accident, or

(iii) The device does not go beyond the requirements of engine starting or warm-up.

§ 86.410–90 Emission standards for 1990 and later model year motorcycles.

(a)(1) Exhaust emissions from 1990 and later model year gasoline-fueled, natural gas-fueled and liquefied petroleum gas-fueled motorcycles shall not exceed (compliance with these standards is optional prior to the 1997 model year for natural gas-fueled and liquefied petroleum gas-fueled motorcycles):

(i) *Hydrocarbons.* 5.0 grams per vehicle kilometer.

(ii) *Carbon monoxide.* 12 grams per vehicle kilometer.

(2) Exhaust emissions from 1990 and later model year methanol-fueled motorcycles shall not exceed:

(i) *Total hydrocarbon equivalent.* 5.0 grams per vehicle kilometer.

(ii) *Carbon monoxide.* 12 grams per vehicle kilometer.

(3) The standards set forth in paragraphs (a) (1) and (2) of this section refer to the exhaust emitted over driving schedule as set forth in subpart F and measured and calculated in accordance with those procedures.

(b) No crankcase emissions shall be discharged into the ambient atmosphere from any new motorcycle subject to this subpart.

[54 FR 14539, Apr. 11, 1989, as amended at 59 FR 48512, Sept. 21, 1994]

§ 86.410–2006 Emission standards for 2006 and later model year motorcycles.

(a)(1) Exhaust emissions from Class I and Class II motorcycles shall not exceed the standards listed in the following table:

TABLE E2006–1—CLASS I AND II MOTORCYCLE EMISSION STANDARDS

Model year	Emission standards (g/km)	
	HC	CO
2006 and later	1.0	12.0

(2) Exhaust emissions from Class III motorcycles shall not exceed the standards listed in the following table:

TABLE E2006–2—CLASS III MOTORCYCLE EMISSION STANDARDS

Tier	Model year	Emission standards (g/km)	
		HC + NO_X	CO
Tier 1	2006–2009	1.4	12.0
Tier 2	2010 and later	0.8	12.0

(b) The standards set forth in paragraphs (a) (1) and (2) of this section refer to the exhaust emitted over the driving schedule as set forth in subpart F and measured and calculated in accordance with those procedures.

(c) Compliance with the HC + NO_X standards set forth in paragraph (a)(2) of this section may be demonstrated using the averaging provisions of § 86.449.

(d) No crankcase emissions shall be discharged into the ambient atmosphere from any new motorcycle subject to this subpart.

(e) Manufacturers with fewer than 500 employees worldwide and producing fewer than 3,000 motorcycles per year for the United States are considered small-volume manufacturers for the purposes of this section. The following provisions apply for these small-volume manufacturers:

(1) Small-volume manufacturers are not required to comply with the Tier 1 standards applicable to Class III motorcycles until model year 2008.

(2) Small-volume manufacturers are not required to comply with the Tier 2 standards applicable to Class III motorcycles.

(3) Small-volume manufacturers are not required to comply with permeation requirements in paragraph (g) of this section until model year 2010.

(f) Manufacturers may choose to certify their Class I and Class II motorcycles to an HC + NO_X standard of 1.4 g/

km instead of the 1.0 g/km HC standard listed in paragraph (a)(1) of this section. Engine families certified to this standard may demonstrate compliance using the averaging provisions of § 86.449.

(g) Model year 2008 and later motorcycles must comply with the evaporative emission standards described in 40 CFR 1051.110. Manufacturers may show compliance using the design-based certification procedures described in 40 CFR 1051.245. Manufacturers may comply with the tank permeation standards using the averaging provisions in 40 CFR part 1051, subpart H, but may not include any motorcycles equipped with metal fuel tanks in their average emission level. Manufacturers may not average between highway motorcycle engine families and recreational vehicle families.

[69 FR 2436, Jan. 15, 2004, as amended at 70 FR 40434, July 13, 2005; 81 FR 73979, Oct. 25, 2016]

§ 86.411–78 Maintenance instructions, vehicle purchaser.

(a) The manufacturer shall furnish or cause to be furnished to the ultimate purchaser of each new motorcycle the written instructions for the periodic and anticipated maintenance and use of the vehicle by the ultimate purchaser as may be reasonable and necessary to assure the proper functioning of emission control systems for the vehicle's useful life.

(1) Such instructions shall be provided for those vehicle and engine components listed in appendix VI to this part (and for any other components) to the extent that maintenance of these components is necessary to assure the proper functioning of emission control systems.

(2) Such instructions shall be in the English language and in clear, and to the extent practicable, nontechnical language.

(b) The maintenance instructions required by this section shall:

(1) Contain a general description of the documentation which the manufacturer will require from the ultimate purchaser or any subsequent purchaser as evidence of compliance with the instructions, and

(2) Specify the performance of all scheduled maintenance performed by the manufacturer under § 86.428.

§ 86.412–78 Maintenance instructions, submission to Administrator.

(a) *Instructions for ultimate purchaser.* (1) The manufacturer shall provide to the Administrator, at least 30 days before being supplied to the ultimate purchaser (unless the Administrator consents to a lesser period of time), a copy of the maintenance instructions which the manufacturer proposes to supply to the ultimate purchaser. The instructions must include the periodic and anticipated maintenance contained in the application for certification or contained in the manufacturers' records (if anticipated sales are less than 10,000 units). Such instructions must be reasonable and necessary to assure the proper functioning of the vehicle's emission control systems.

(2) Any revision to the maintenance instructions which will affect emissions shall be supplied to the Administrator at least 30 days before being supplied to the ultimate purchaser unless the Administrator consents to a lesser period of time.

(b) *Other instructions.* The manufacturer of any new motorcycle subject to any of the standards prescribed in this subpart shall submit to the Administrator at the time of issuance by the manufacturer, copies of all sales brochures, instructions, or explanations regarding the use, repair, adjustment, maintenance, or testing of such vehicle relevant to the control of crankcase or exhaust emissions, issued by the manufacturer for use by other manufacturers, assembly plants, distributors, dealers, repair facilities, and ultimate purchasers. Any material not translated into the English language need not be submitted unless specifically requested by the Administrator.

§ 86.413–78 Labeling.

(a)(1) The manufacturer of any motorcycle shall, at the time of manufacture, affix a permanent, legible label,

of the type and in the manner described below, containing the information hereinafter provided, to all production models of such vehicles available for sale to the public and covered by a certificate of conformity.

(2) A permanent, legible label shall be affixed in a readily accessible position. Multi-part labels may be used.

(3) The label shall be affixed by the vehicle manufacturer who has been issued the certificate of conformity for such vehicle, in such a manner that it cannot be removed without destroying or defacing the label.

(4) The label shall contain the following information lettered in the English language in block letters and numerals, which shall be of a color that contrasts with the background of the label:

(i) *The label heading.* Vehicle Emission Control Information;

(ii) Full corporate name and trademark of the manufacturer;

(iii) Engine displacement (in cubic centimetres) and engine family identification;

(iv) Engine tuneup specifications and adjustments, as recommended by the manufacturer, including idle speed, ignition timing, and the idle air-fuel mixture setting procedure and value (e.g., idle CO, idle air-fuel ratio, idle speed drop). These specifications shall indicate the proper transmission position during tuneup;

(v) Any specific fuel or engine lubricant requirements (e.g., lead content, Research octane number, engine lubricant type);

(vi) An unconditional statement of conformity to USEPA regulations which includes the model year; for example, This Vehicle Conforms to USEPA Regulation Applicable to . . . . . Model Year New Motorcycles.

(b) The provisions of this section shall not prevent a manufacturer from also reciting on the label that such vehicle conforms to any other applicable Federal or State standards for new motorcycles or any other information that such manufacturer deems necessary for, or useful to, the proper operation and satisfactory maintenance of the vehicle.

[42 FR 1126, Jan. 5, 1977, as amended at 42 FR 56737, Oct. 28, 1977]

§ 86.413–2006 Labeling.

(a)(1) The manufacturer of any motorcycle shall, at the time of manufacture, affix a permanent, legible label, of the type and in the manner described in this section, containing the information provided in this section, to all production models of such vehicles available for sale to the public and covered by a certificate of conformity.

(2) A permanent, legible label shall be affixed in a readily accessible position. Multi-part labels may be used.

(3) The label shall be affixed by the vehicle manufacturer who has been issued the certificate of conformity for such vehicle, in such a manner that it cannot be removed without destroying or defacing the label, and shall not be affixed to any part which is easily detached from the vehicle or is likely to be replaced during the useful life of the vehicle.

(4) The label shall contain the following information lettered in the English language in block letters and numerals, which shall be of a color that contrasts with the background of the label:

(i) The label heading shall read: ''Vehicle Emission Control

Information'';

(ii) Full corporate name and trademark of the manufacturer;

(iii) Engine displacement (in cubic centimeters or liters) and engine family identification;

(iv) Engine tuneup specifications and adjustments, as recommended by the manufacturer, including, if applicable: idle speed, ignition timing, and the idle air-fuel mixture setting procedure and value (e.g., idle CO, idle air-fuel ratio, idle speed drop). These specifications shall indicate the proper transmission position during tuneup, and which accessories should be in operation and which systems should be disconnected during a tuneup;

(v) Any specific fuel or engine lubricant requirements (e.g., lead content, research octane number, engine lubricant type);

(vi) Identification of the exhaust emission control system, using abbreviations in accordance with SAE J1930, June 1993, including the following abbreviations for items commonly appearing on motorcycles:

OC Oxidation catalyst;
TWC Three-way catalyst;
AIR Secondary air injection (pump);
PAIR Pulsed secondary air injection;
DFI Direct fuel injection;
O2S Oxygen sensor;
HO2S Heated oxygen sensor;
EM Engine modification;
CFI Continuous fuel injection;
MFI Multi-port (electronic) fuel injection; and
TBI Throttle body (electronic) fuel injection.

(viii) An unconditional statement of conformity to U.S. EPA regulations which includes the model year; for example, ''This Vehicle Conforms to U.S. EPA Regulations Applicable to___Model Year New Motorcycles'' (the blank is to be filled in with the appropriate model year). For all Class III motorcycles and for Class I and Class II motorcycles demonstrating compliance with the averaging provisions in 40 CFR 86.449 the statement must also include the phrase ''is certified to an HC + NO_X emission standard of ____ grams/kilometer'' (the blank is to be filled in with the Family Emission Limit determined by the manufacturer).

(b) The provisions of this section shall not prevent a manufacturer from also reciting on the label that such vehicle conforms to any other applicable Federal or State standards for new motorcycles or any other information that such manufacturer deems necessary for, or useful to, the proper operation and satisfactory maintenance of the vehicle.

[70 FR 40434, July 13, 2005]

§ 86.414–78 Submission of vehicle identification number.

(a) Upon request by the Administrator, the manufacturer of any motorcycle covered by a certificate of conformity shall, within 30 days, identify by vehicle identification number, the vehicle(s) covered by the certificate of conformity.

(b) The manufacturer of any motorcycle covered by a certificate of conformity shall furnish to the Administrator, at the beginning of each model year, any vehicle identification number coding system which identifies whether such vehicle(s) are covered by a certificate of conformity.

§ 86.415–78 Production vehicles.

(a) Any manufacturer obtaining certification shall supply to the Administrator, upon his request, a reasonable number of production vehicles selected by the Administrator which are representative of the engines, emission control systems, fuel systems, and transmissions offered and typical of production models available for sale under the certificate. These vehicles shall be supplied for testing at such time and place and for such reasonable periods as the Administrator may require.

(b) Any manufacturer obtaining certification shall notify the Administrator of the number of vehicles of each engine family-engine displacement-emission control system-fuel system-transmission type-inertial mass category combination produced for sale in the United States during the preceding year. This report must be submitted every year within 45 days after the end of the model year.

(c) All motorcycles covered by a certificate of conformity shall prior to delivery to the ultimate purchaser be adjusted, by the manufacturer or his agent, to the ignition timing specification detailed in § 86.413.

[42 FR 1126, Jan. 5, 1977, as amended at 49 FR 48138, Dec. 10, 1984; 75 FR 22980, Apr. 30, 2010]

§ 86.416–80 Application for certification.

(a) New motorcycles produced by a manufacturer whose projected sales in the United States is 10,000 or more units (for the model year in which certification if sought) are covered by the following:

(1) An application for a certificate of conformity to the regulations in the English language applicable to new motorcycles shall be made to the Administrator by the manufacturer and shall be updated and corrected by amendment. Where possible, a manufacturer should include in a single application for certification, a description of all vehicles in each class for

which certification is required. A manufacturer may, however, choose to apply separately for certification of part of his product line. The selection of test vehicles and the computation of test results will be determined separately for each application.

(2) The application shall be in writing signed by an authorized representative of the manufacturer, and shall include the following:

(i) Identification and description of the vehicles covered by the application and a description of their engine, emission control system and fuel system components. This shall include a detailed description of each auxiliary emission control device. Transmission gear ratios, overall drive ratios and vehicle mass (or range of mass) shall also be included. The label and its location shall be specified, § 86.413. Available optional equipment shall be described.

(ii) The range of available fuel and ignition system adjustments.

(iii) Projected U.S. sales data sufficient to enable the Administrator to select a test fleet representative of the vehicles for which certification is requested. If reduced testing based on low sales volume is requested the method of predicting sales shall be described.

(iv) A description of the test equipment (if applicable) and fuel and engine lubricant proposed to be used.

(v) A description of the proposed service accumulation procedure and a description of the proposed scheduled maintenance.

(vi) A statement of recommended periodic and anticipated maintenance and procedures necessary to assure that the vehicles covered by a certificate of conformity in operation conform to the regulations, listings of the fuels and lubricants to be recommended to the ultimate purchaser and a description of the program for training of personnel for such maintenance, and the equipment required to perform this maintenance.

(vii) A description of normal assembly line operations and adjustments if such procedures exceed 100 km (62 miles) or three hours of engine operations.

(viii) Beginning with model year 2008, a description of the evaporative emission controls and applicable test data.

(ix) The name of an agent for service of process located in the United States. Service on this agent constitutes service on you or any of your officers or employees for any action by EPA or otherwise by the United States related to the requirements of this part.

(3) Completed copies of the application and of any amendments thereto, and all notifications under §§ 86.438 and 86.439 shall be submitted in such multiple copies as the Administrator may require.

(4) For purposes of this section, ''auxiliary emission control device'' means any element of design which senses temperature, vehicle speed, engine RPM, transmission gear, manifold vacuum, or any other parameter for the purpose of activating, modulating, delaying, or deactivating the operation of any part of the emission control system.

(b) New motorcycles produced by a small-volume manufacturer (as defined in § 86.410(e)) or by any other manufacturer whose projected sales in the United States is less than 10,000 units (for the model year in which certification is sought) are covered by the following:

(1) All the information that would otherwise be required to be submitted to EPA under paragraph (a)(2) of this section must be made a part of the manufacturer's records, except there is no requirement to submit the information to the Administrator or receive approval from the Administrator.

(2) Section 86.437 details the statements that these manufacturers are required to provide to the Administrator.

(c) For the purpose of determining applicability of paragraphs (a) or (b) of this section, where there is more than one importer or distributor of vehicles manufactured by the same person, the projected sales shall be the aggregate of the projected sales of those vehicles by such importers or distributors.

(d)(1) The Administrator has determined that the following certification procedure may be used to demonstrate compliance for each motorcycle engine family for which certification is

sought. Manufacturers may follow these procedures at their option.

(i) The manufacturer shall satisfy all applicable requirements of part 86 necessary to demonstrate compliance with the standards for each class of new motorcycles for which certification is sought.

(ii) As specifically allowed by the Administrator the manufacturer shall assume the responsibility for part or all of the decisions applicable to the family for which certification is sought and which are within the jurisdiction of the Administrator, with the exception that the Administrator will determine whether a test motorcycle has met the applicable emission standards.

(iii) The manufacturer shall maintain, update, and correct all records and information required.

(iv) The Administrator may review a manufacturer's records at any time. At the Administrator's discretion, this review may take place either at the manufacturer's facility or at another facility designated by the Administrator.

(v) At the Administrator's request, the manufacturer shall notify the Administrator of the status of the certification program including projected schedules of those significant accomplishments specified by the Administrator.

(vi) The manufacturer shall permit the Administrator to inspect any facilities, records, and vehicles from which data were obtained under the abbreviated certification review procedure.

(vii) Upon completing all applicable requirements of part 86 the manufacturer shall submit a separate application for a certificate of conformity for each class of new motorcycles for which certification is sought. Such application shall be made in writing to the Administrator by the manufacturer.

(A) The Administrator may approve or disapprove in whole or in part an application for certification according to the procedures specified in § 86.417–78(b).

(B) If, after a review of the application for certification, test reports and data submitted by the manufacturer, data obtained during an inspection, and any other pertinent data or information, the Administrator determines that a test vehicle(s) has not met the requirements of the Act and the applicable subpart, he will notify the manufacturer in writing and set forth the reason(s) for the determination.

(2) Those families which are not following the procedure described in paragraph (d)(1) of this section will follow the procedure in this subpart with the exception of paragraph (d)(1) of this section.

(e) The Administrator may require that an engine family previously allowed to be subjected to the abbreviated certification review procedure be transferred to the complete review procedure.

(f) Upon request, the Administrator may allow a manufacturer to use alternate certification procedures that are equivalent in terms of demonstrating compliance with the requirements of this part.

[42 FR 56737, Oct. 28, 1977, as amended at 45 FR 26045, Apr. 17, 1980; 49 FR 48138, Dec. 10, 1984; 69 FR 2436, Jan. 15, 2004; 71 FR 51487, Aug. 30, 2006]

§ 86.417–78 Approval of application for certification.

(a) After a review of the application for certification and any other information which the Administrator may require, the Administrator may approve the application and select a test fleet as appropriate.

(b) The Administrator may disapprove in whole or in part an application for certification for reasons including incompleteness, inaccuracy, inappropriate proposed distance accumulation procedures, maintenance, test equipment, label content or location, fuel or lubricant, and incorporation of defeat devices in vehicles described by the application. Where any part of an application is rejected the Administrator shall notify the manufacturer in writing and set forth the reasons for such rejection. The manufacturer may request a hearing under § 86.443.

§ 86.418–78 Test fleet selection.

(a) Test fleet selection and requirements on test vehicles are found in §§ 86.419 to 86.423. This selection process is also graphically depicted in Figure E78–1.

Figure E78-1 Selection Process

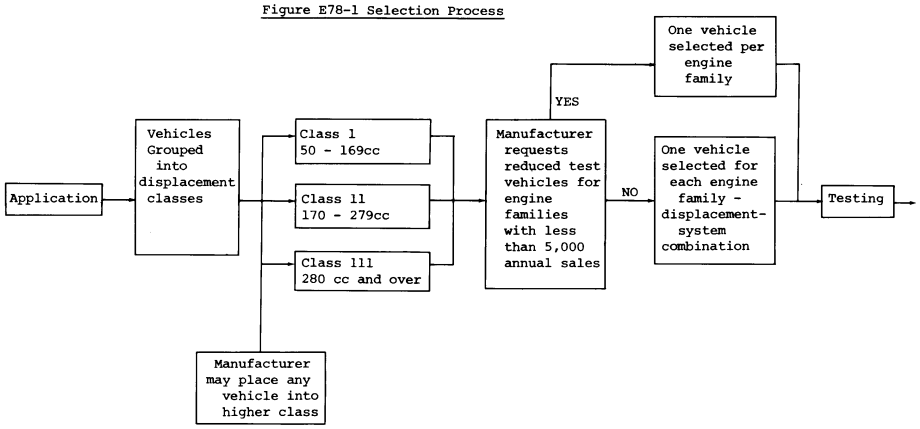

(b) [Reserved]

§ 86.419–2006 Engine displacement, motorcycle classes.

(a)(1) Engine displacement shall be calculated using nominal engine values and rounded to the nearest whole cubic centimeter.

(2) For rotary engines, displacement means the maximum volume of a combustion chamber between two rotor tip seals, minus the minimum volume of the combustion chamber between those two rotor tip seals, times three times the number of rotors, according to the following formula:

$$cc = (\text{max. chamber volume} - \text{min. chamber volume}) \times 3 \times \text{no. of rotors}$$

(b) Motorcycles will be divided into classes based on engine displacement.

(1) Class I—0 to 169 cc (0 to 10.4 cu. in.).

(i) Class I motorcycles with engine displacement less than 50 cc comprise the Class I-A subclass.

(ii) Class I motorcycles with engine displacement 50 cc or higher comprise the Class I-B subclass.

(2) Class II—170 to 279 cc (10.4 to 17.1 cu. in.).

(3) Class III—280 cc and over (17.1 cu. in. and over).

(c) At the manufacturer's option, a vehicle described in an application for certification may be placed in a higher class (larger displacement). All procedures for the higher class must then be complied with and compliance with emission standards will be determined on the basis of engine displacement.

[69 FR 2437, Jan. 15, 2004, as amended at 81 FR 73979, Oct. 25, 2016]

§ 86.420–78 Engine families.

(a) The vehicles covered in the application will be divided into groupings whose engines are expected to have similar emission characteristics throughout their useful life. Each group of engines with similar emission characteristics shall be defined as a separate engine family.

(b) *Reciprocating families.* To be classed in the same engine family, reciprocating engines must be identical in all of the following applicable respects:

(1) The combustion cycle.

(2) The cooling mechanism.

(3) The cylinder configuration (inline, vee, opposed, bore spacings, etc.).

(4) The number of cylinders.

(5) The engine displacement class, § 86.419.

(6) The method of air aspiration.

(7) The number of catalytic converters, location, volume, and composition.

(8) The thermal reactor characteristics.

(9) The number of carburetors.

(10) The prechamber characteristics.

(c) At the manufacturer's option, reciprocating engines identical in all the respects listed in paragraph (b) of this

section may be further divided into different engine families if the Administrator determines that they may be expected to have different emission characteristics. This determination will be based upon a consideration of features such as:

(1) The bore and stroke.

(2) The combustion chamber configuration.

(3) The intake and exhaust timing method of actuation (poppet valve, reed valve, rotary valve, etc.).

(4) The intake and exhaust valve or port sizes, as applicable.

(5) The fuel system.

(6) The exhaust system.

(d) *Rotary families*. To be classed in the same engine family, rotary combustion cycle engines must be identical in all of the following applicable respects:

(1) The major axis of the epitrochoidal curve.

(2) The minor axis of the epitrochoidal curve.

(3) The generating radius of the epitrochoidal curve.

(4) The cooling mechanism.

(5) The number of rotors.

(6) The engine displacement class, § 86.419.

(7) The method of air aspiration.

(8) The number of catalytic converters, location, volume and composition.

(9) The thermal reactor characteristics.

(10) The number of carburetors.

(11) The prechamber characteristics.

(e) At the manufacturer's option, rotary combustion cycle engines identical in all the respects listed in paragraph (d) of this section, may be further divided into different engine families if the Administrator determines that they may be expected to have different emission characteristics. This determination will be based upon a consideration of features, such as:

(1) The width of the rotor housing.

(2) The type and location of intake port (side, peripheral, combination, etc.).

(3) The number of spark plugs per rotor.

(4) The fuel system.

(5) The exhaust system.

(f) Where engines are of a type which cannot be divided into engine families based upon the criteria listed in paragraphs (b) and (d) of this section, the Administrator will establish families of those engines based upon the features most related to their emission characteristics.

[42 FR 1126, Jan. 5, 1977, as amended at 44 FR 48205, Aug. 17, 1979]

§ 86.421–78 Test fleet.

(a) A test vehicle will be selected by the Administrator to represent each engine-displacement-system combination. The configuration (engine calibration, transmission, drive ratio, mass, options, etc.) in the manufacturer's application which the Administrator believes has the greatest probability of exceeding the standards will be selected.

(b) At the manufacturer's option, the Administrator will only select one vehicle to represent each engine family where the total projected annual sales for that family are less than 5,000 vehicles.

(c) A manufacturer may elect to operate and test additional vehicles which are identical to those selected by the Administrator. Written notice of a commitment to operate and test additional vehicles shall be given to the Administrator prior to the start of testing and not later than 30 days following notification of the test fleet selection. The results of tests performed by the manufacturer will be combined to determine deterioration factors. Each vehicle must meet applicable standards when tested by the Administrator and when those results are projected to the useful life.

(d) In lieu of testing a test vehicle and submitting data therefore, a manufacturer may, with the prior written approval of the Administrator, submit exhaust emission data on a similar vehicle for which certification has previously been obtained or for which all applicable data has previously been submitted.

§ 86.422–78 Administrator's fleet.

The Administrator may require additional test vehicles identical in all material respects to vehicles selected in accordance with § 86.421. The number of

vehicles selected shall not increase the size of the test fleet by more than 20 percent or one vehicle, whichever is greater.

§ 86.423–78 Test vehicles.

(a)(1) Before beginning service accumulation on a test vehicle, the manufacturer may perform a zero-kilometer exhaust emission test.

(2) If such a test is performed, the data shall be submitted to the Administrator when the application is submitted.

(3) Zero-kilometer test results shall not be included in the determination of deterioration factors.

(b) Once a manufacturer begins to operate a test vehicle, as indicated by compliance with paragraph (a) of this section, the data from the vehicle will be used, unless specified otherwise by the Administrator. Discontinuation of a vehicle shall be allowed only with the written consent of the Administrator.

(c) Test vehicles shall be calibrated at zero kilometres within the production tolerances applicable to the manufacturer's specifications.

(d) The Administrator may disqualify a vehicle which receives assembly line operations and adjustments which will not be performed on production vehicles.

[42 FR 1126, Jan. 5, 1977, as amended at 49 FR 48138, Dec. 10, 1984]

§ 86.425–78 Test procedures.

(a) Motorcycle emission test procedures are found in subpart F.

(b) The Administrator may prescribe emission test procedures for any motorcycle which he determines is not susceptible to satisfactory testing by the procedures set forth in subpart F.

(c) Testing of any type with respect to any test vehicle other than that specified in this subpart and subpart F is not allowed except as specifically authorized by the Administrator.

§ 86.426–78 Service accumulation.

(a) The procedure for service accumulation will be the Durability Driving Schedule as specified in appendix IV to this part. A modified procedure may also be used if approved in advance by the Administrator. Except with the advance approval of the Administrator, all vehicles will accumulate distance at a measured curb mass which is within 5 kg (11.0 lb) of the loaded vehicle mass specified by the Administrator.

(b) During service accumulation, vehicles shall not be operated for more than 12 hours during an operating sequence. Engine shutdowns are permitted during the operating sequence, but the periods of shutdown are not included in the 12 hour total. Following each operating sequence, the vehicle shall soak, without operation, for a minimum of 8 hours. During soak periods, the vehicle shall be exposed to normal outside ambient temperatures and humidity conditions unless vehicle maintenance or servicing is being performed.

(c) The manufacturer's recommended shifting procedure will be used for laps 1 through 10. Lap 11 shifts (W.O.T. accelerations) must be conducted at the manufacturer's recommended maximum safe engine speed.

[42 FR 1126, Jan. 5, 1977, as amended at 42 FR 56737, Oct. 28, 1977]

§ 86.427–78 Emission tests.

(a)(1) Each test vehicle shall be driven with all emission control systems installed and operating for the following total test distances, or for such lesser distances as the Administrator may agree to as meeting the objectives of this procedure. (See § 86.419 for class explanation.)

Displacement class	Total test distance (kilometers)	Minimum test distance (kilometers)	Minimum number of tests
I	6,000	2,500	4
II	9,000	2,500	4
III	15,000	3,500	4

(2) A zero kilometer emission test may be performed prior to the beginning of service accumulation.

(b) All vehicles shall undergo at least four emission tests; one at the minimum test distance, one before and one after periodic maintenance, and one at the total test distance. If no maintenance is scheduled, then at least two tests will be performed, at equal intervals, between the minimum and total test distances. Additional tests may be performed; such tests must be at equal

intervals and approved by the Administrator prior to starting service accumulation.

(c) Where the Administrator agrees to a lesser distance for service accumulation, he may modify the maintenance provisions of this subpart.

(d) All tests required by this subpart must be conducted at an accumulated distance within 250 kilometers (155 mi) of the nominal distance at each test point.

(e)(1) If a manufacturer conducts multiple tests at any test point at which the data are intended to be used in the calculation of the deterioration factor, the number of tests must be the same at each point and may not exceed three valid tests unless the manufacturer chooses to average the test results.

(2) If the manufacturer chooses to average the test results at a test point, he may conduct more tests than the minimum number of tests conducted at any other test point.

The results of the multiple tests shall be averaged to create a single value which is the test point value used in the deterioration factor calculation specified in § 86.432–78.

(3) When using this option to generate data for a particular test point, the manufacturer must include in the average all valid test data generated at that test point.

(4) The manufacturer shall follow the same procedure for all exhaust pollutants.

(5) The test results obtained from the emission tests performed before and after maintenance affecting emissions shall not be averaged.

(f) The Administrator may require that any one or more of the test vehicles be submitted to him, at such places as he may designate, for the purpose of conducting emissions tests. The Administrator may specify that he will conduct such testing at the manufacturer's facility, in which case instrumentation and equipment specified by the Administrator shall be made available by the manufacturer for test operations. Any testing conducted at a manufacturer's facility pursuant to this paragraph shall be scheduled by the manufacturer as promptly as possible.

(g) Whenever the Administrator conducts a test on a test vehicle, the results of that test, unless subsequently invalidated by the Administrator, shall comprise the data for the vehicle at that prescribed test point and the manufacturer's data for that prescribed test point shall not be used in determining compliance with emission standards.

[42 FR 1126, Jan. 5, 1977, as amended at 49 FR 48139, Dec. 10, 1984]

§ 86.428–80 Maintenance, scheduled; test vehicles.

(a) Periodic maintenance on the engine, emission control system, and fuel system of test vehicles shall be scheduled for performance at the same distance intervals that will be specified in the manufacturer's maintenance instructions furnished to the ultimate purchaser. Such maintenance shall be performed only under the following provisions.

(b) Periodic major engine tune-ups to the manufacturer's specifications may be performed no more frequently than as follows nor may any tune-up be performed within 1000 km prior to the official test.

Displacement class	Minimum interval (kilometer)
I	3,000
II	3,000
III	4,000

(c) A scheduled major engine tune-up shall be restricted to items listed below and shall be conducted in a manner consistent with service instructions and specifications provided by the manufacturer for use by customer service personnel. The following items may be inspected, replaced, cleaned, adjusted, and/or serviced as required: (1) Breaker points, timing, (2) idle speed and idle air/fuel mixture, (3) valve lash, (4) engine bolt torque, and (5) spark plugs.

(d) The Administrator will specify the ignition timing, idle air fuel mixture and other fuel system adjustments to be used at each tune-up. The settings selected will be those the Administrator deems appropriate within the physically available range.

(e) Periodic change of engine and transmission oil, and change or service of oil, air, and fuel filters will be allowed at the same distance intervals that will be specified in the manufacturer's maintenance instructions.

(f) Requests for authorization of periodic maintenance of emission control related components not specifically authorized to be maintained by this section, and for anticipated maintenance (see § 86.428), must be made prior to the beginning of distance accumulation. The Administrator will approve the performance of such maintenance if the manufacturer makes a satisfactory showing that the maintenance will be performed on vehicles in use and that the maintenance is reasonable and necessary.

(1) The EGR system may be serviced a maximum of two times during the durability service accumulation if failure of the EGR system activates an audible and/or visual signal approved by the Administrator which alerts the vehicle operator to the need for EGR system maintenance, or if the need for periodic maintenance of the EGR system is overtly signalled to the vehicle operator by an appropriate means, e.g., an indicator light or significantly reduced driveability performance.

(2) The catalytic converter may be serviced only once during the durability service accumulation if failure of the catalytic converter activates an audible and/or visual signal approved by the Administrator which alerts the vehicle operator to the need for catalytic converter maintenance, or if the need for periodic maintenance of the catalytic converter is overtly signalled to the vehicle operator by an appropriate means, e.g., an indicator light or significantly reduced driveability performance.

(g) Certain engine components may require maintenance which, by its nature, cannot be scheduled for periodic intervals, but which the manufacturer believes will be necessary. For example, piston and cylinder replacement caused by piston seizure which results in the vehicle being inoperative; or in the case of two-stroke engines, decarbonization, the need for which is signalled to the vehicle operator by significantly reduce driveability performance. Such maintenance is designated anticipated maintenance. Anticipated maintenance must be identified by the manufacturer and approved as being appropriate by the Administrator prior to the start of service accumulation. The approximate distance at which the need for anticipated maintenance may arise must be specified in the application for certification.

(h) Complete emission tests (see subpart F) are required, unless waived by the Administrator, before and after any vehicle maintenance which may reasonably be expected to affect emissions.

§ 86.429–78 Maintenance, unscheduled; test vehicles.

(a) Any unscheduled engine, emission control system, or fuel system adjustment, repair, removal, disassembly, cleaning, or replacement on vehicles shall be performed only with the advance approval of the Administrator.

(1) In the case of unscheduled maintenance, such approval will be given if the Administrator:

(i) Has made a preliminary determination that part failure or system malfunction, or the repair of such failure or malfunction, does not render the vehicle unrepresentative of vehicles in use, and does not require direct access to the combustion chamber, except for spark plug, fuel injection component, or removable prechamber removal or replacement; and

(ii) Has made a determination that the need for maintenance or repairs is indicated by an overt indication of malfunction such as persistent misfire, vehicle stall, overheating, fluid leakage, loss of oil pressure, or charge indicator warning.

(2) Emission measurements may not be used as a means of determining the need for unscheduled maintenance under paragraph (a)(1)(i) of this section.

(b) Repairs to vehicle components of test vehicles, other than the engine, emission control system, or fuel system, shall be performed only as a result of part failure, vehicle system malfunction, or with the advance approval of the Administrator.

(c) The Administrator shall be given the opportunity to verify the extent of

an overt indication of part failure and/or vehicle malfunction (e.g., misfire, stall), or an activation of an audible and/or visual signal, prior to the performance of any maintenance to which such overt indication or signal is relevant under the provisions of this section.

(d) Equipment, instruments, or tools may not be used to identify malfunctioning, maladjusted, or defective engine components unless the same or equivalent equipment, instruments, or tools will be available at dealerships and other service outlets and

(1) Are used in conjunction with scheduled maintenance on such components, and

(2) Are used subsequent to the identification of a vehicle or engine malfunction, as provided in paragraph (a)(1) of this section for durability or emission data vehicles, or

(3) Unless specifically authorized by the Administrator.

(e) If the Administrator determines that part failure or system malfunction occurrence and/or repair rendered the vehicle unrepresentative of vehicles in use, the vehicle shall not be used as a test vehicle.

(f) Complete emission tests are required, unless waived by the Administrator, before and after any vehicle maintenance which may reasonably be expected to affect emissions.

§ 86.430–78 Vehicle failure.

Any test vehicle which incurs major mechanical failure necessitating disassembly of the engine shall not be used as a test vehicle. This prohibition does not apply to failures occurring after the completion of all required tests at the total test distance.

[49 FR 48139, Dec. 10, 1984]

§ 86.431–78 Data submission.

(a) Data from all tests (including voided tests) performed by a manufacturer with total projected sales in excess of 10,000 vehicles shall be included in the application.

(b) The manufacturer shall furnish to the Administrator explanation for voiding any test. The Administrator will determine if voiding the test was appropriate based upon the explanation given by the manufacturer. If the Administrator determines that voiding the test was not appropriate, the Administrator may require that the data from that test be used in the calculation of the deterioration factor for emissions.

(c) When unscheduled or anticipated maintenance is performed, a complete record of all pertinent maintenance, including the malfunction diagnosis made, the corrective action taken, and the test data obtained shall be included in the application.

(d) A complete record of all maintenance shall be supplied.

(e) Measure CO_2, N_2O, and CH_4 as described in this paragraph (e) with each zero kilometer certification test (if one is conducted) and with each test conducted at the applicable minimum test distance as defined in § 86.427–78. Use the analytical equipment and procedures specified in 40 CFR part 1065 as needed to measure N_2O and CH_4. Report these values in your application for certification. The requirements of this paragraph (e) apply starting with model year 2011 for CO_2 and 2012 for CH_4. The requirements of this paragraph (e) related to N_2O emissions apply for engine families that depend on NO_X aftertreatment to meet emission standards starting with model year 2013. Small-volume manufacturers (as defined in § 86.410–2006(e)) may omit measurement of N_2O and CH_4; other manufacturers may provide appropriate data and/or information and omit measurement of N_2O and CH_4 as described in 40 CFR 1065.5. Use the same measurement methods as for your other results to report a single value for CO_2, N_2O, and CH_4. Round the final values as follows:

(1) Round CO_2 to the nearest 1 g/km.

(2) Round N_2O to the nearest 0.001 g/km.

(3) Round CH_4 to the nearest 0.001 g/km.

[42 FR 1126, Jan. 5, 1977, as amended at 49 FR 48139, Dec. 10, 1984; 74 FR 56373, Oct. 30, 2009]

§ 86.432–78 Deterioration factor.

(a) Deterioration factors shall be developed for each test vehicle from the emission test results. A separate factor shall be developed for each pollutant. The applicable data to be used in calculating these factors are:

(1) The results from all valid tests conducted by the manufacturer or Administrator at scheduled test intervals.

(2) The results from tests conducted before and after scheduled maintenance unless specifically excluded by the Administrator.

(3) The results from tests conducted before and after unscheduled maintenance, if approval of the maintenance by the Administrator was conditioned on the data being used in the deterioration factor calculation.

(b) Emission results which are less than 0.10 g/km shall be considered to be 0.10 g/km for purposes of this section.

(c) Test results for each pollutant shall be plotted as a function of the service accumulated at the start of the emission test, rounded to the nearest kilometre. These results shall be correlated to a straight line, fit by the method of least squares.

(d) An exhaust emission deterioration factor will be calculated by dividing the predicted emissions at the useful life distance by the predicted emissions at the total test distance. Predicted emissions are obtained from the correlation developed in paragraph (c) of this section.

Factor = Predicted total distance emissions ÷ Predicted total test distance emissions.

These interpolated and extrapolated values shall be carried out to four places to the right of the decimal point before dividing one by the other to determine the deterioration factor. The results shall be rounded to three places to the right of the decimal point.

(e) Deterioration factors computed to be less than 1.000 shall be 1.000.

(f)(1) The manufacturer has the option of applying an outlier test point procedure to completed durability data within its certification testing program for a given model year.

(2) The outlier procedure will be specified by the Administrator.

(3) For any pollutant, durability-data test points that are identified as outliers shall not be included in the determination of deterioration factors if the manufacturer has elected this option.

(4) The manufacturer shall specify to the Administrator, before the certification of the first engine family for that model year, if it intends to use the outlier procedure.

(5) The manufacturer may not change procedures after the first engine family of the model year is certified.

(6) Where the manufacturer chooses to apply the outlier procedure to a data set containing data which were averaged under § 86.427–78(e), the outlier procedure shall be completed before averaging the data.

[42 FR 1126, Jan. 5, 1977, as amended at 42 FR 56737, Oct. 28, 1977; 49 FR 48139, Dec. 10, 1984; 81 FR 73979, Oct. 25, 2016]

§ 86.434–78 Testing by the Administrator.

(a) At the conclusion of service accumulation, and after emission tests for deterioration, the Administrator may require confirmatory testing. The Administrator will designate where such testing shall be performed.

(b) The manufacturer may request a retest. The results of the retest will be used to determine compliance.

(c) If the emission results exceed the standard, certification will be denied.

[49 FR 48139, Dec. 10, 1984]

§ 86.435–78 Extrapolated emission values.

(a) If the deterioration factor lines are below the standards between the minimum test distance and the useful life, or if all points used to generate the lines are below the standards, predicted useful life emissions shall be calculated. If not, the manufacturers may elect to withdraw the vehicle or accumulate additional service.

(b) The emission test results of each pollutant obtained from the half life test will be multiplied by the appropriate deterioration factors to determine useful life emissions.

(1) If the useful life emissions are below the standards, certification will be granted.

(2) If any of the useful life emissions exceed the emission standards, the vehicle must (if not withdrawn) accumulate distance to the useful life.

[42 FR 1126, Jan. 5, 1977, as amended at 49 FR 48139, Dec. 10, 1984]

§ 86.436–78 Additional service accumulation.

(a) Additional service up to the useful life will be accumulated under the same conditions as the initial service accumulation.

(b) New deterioration lines will be generated using all applicable test points up to the useful life. The same procedures for determining the original deterioration lines will be used.

(c) [Reserved]

(d) To qualify for certification:

(1) The full life emission test results must be below the standards, and

(2) The deterioration line must be below the standard at the minimum test distance and the useful life, or all points used to generate the line, must be below the standard.

(e) If the vehicle is unable to complete the total distance due to engine mechanical failure, certification will be granted if:

(1) The mechanical failure was anticipated, § 86.428, and

(2) A new deterioration line calculated using the procedure described in § 86.436–78(b) is below the standard at the minimum test distance and at the useful life, and,

(3) The results of the half life emission tests, when adjusted by the new deterioration factors, are below the standards.

[42 FR 1126, Jan. 5, 1977, as amended at 49 FR 48139, Dec. 10, 1984]

§ 86.437–78 Certification.

(a) New motorcycles produced by a manufacturer whose projected sales in the United States is 10,000 or more units (for the model year in which certification is sought) are covered by the following:

(1) The manufacturer shall submit to the Administrator a statement that the test vehicles with respect to which data are submitted have been tested in accordance with the applicable test procedures, that they meet the requirements of such tests, and that, on the basis of such tests, they conform to the requirements of the regulations in this part. If such statements cannot be made with respect to any vehicle tested, the vehicle shall be identified, and all pertinent test data relating thereto shall be supplied.

(2)(i) If, after a review of the test reports and data submitted by the manufacturer, data derived from any inspection carried out under § 86.441 and any other pertinent data or information, the Administrator determines that a test vehicle(s) meets the requirements of the Act and of this subpart, he will issue a certificate of conformity with respect to such vehicle(s) except in cases covered by § 86.442.

(ii) Such certificate will be issued for such period not to exceed one model year as the Administrator may determine and upon such terms as he may deem necessary to assure that any new motorcycle covered by the certificate will meet the requirements of the act and of this subpart.

(iii) The certificate will cover all vehicles represented by the test vehicle and will certify compliance with no more than one set of applicable standards.

(3)(i) If, after a review of the test reports and data submitted by the manufacturer, data derived from any additional testing conducted pursuant to § 86.427, or information derived from any inspection carried out under § 86.441, or any other pertinent data or information, the Administrator determines that one or more test vehicles of the certification test fleet do not meet applicable standards, he will notify the manufacturer in writing, setting forth the basis for his determination. The manufacturer may request a hearing on the Administrator's determination.

(ii) The manufacturer may, at his option, proceed with any of the following alternatives with respect to any vehicles represented by a test vehicle(s) determined not in compliance with applicable standards:

(A) Request a hearing.

(B) Delete from the application for certification the vehicles represented by the failing test vehicle. (Vehicles so deleted may be included in a later request for certification under paragraph (b)(2)(iii) of this section.) The Administrator will then select in place of each failing vehicle an alternate vehicle chosen in accordance with selection criteria employed in selecting the vehicle that failed, or

(C) Repair the test vehicle and demonstrate by testing that it meets applicable standards. Another vehicle which is in all material respects the same as the first vehicle, as repaired, shall then be operated and tested in accordance with applicable test procedures.

(iii) If the manufacturer does not request a hearing or present the required data under subparagraph (2) of this paragraph, the Administrator will deny certification.

(b) New motorcycles produced by a manufacturer whose projected sales in the United States is less than 10,000 units (for the model year in which certification is sought) are covered by the following:

(1) The manufacturer shall submit to the Administrator an application for certification containing the following:

(i) A brief description of the vehicles to be covered by the certificate (the manufacturer's sales data book or advertising including specifications will satisfy this requirement for most manufacturers).

(ii) A statement signed by the authorized representative of the manufacturer stating: ''The vehicles described herein have been tested in accordance with the provisions of subpart E, part 86, title 40, of the Code of Federal Regulations, and on the basis of these tests are in conformance with that subpart. All of the data and records required by that subpart are on file and are available for inspection by the Administrator. Total sales of vehicles subject to this subpart will be limited to less than 10,000 units.''

(iii) The name of an agent for service of process located in the United States. Service on this agent constitutes service on you or any of your officers or employees for any action by EPA or otherwise by the United States related to the requirements of this part.

(2) If, after a review of the statement the Administrator determines that the requirements of this subpart have been met, he will issue a certificate of conformity with respect to the described vehicles except in cases covered by § 86.442.

(3) Such certificate will be issued for such a period not to exceed one model year as the Administrator may determine and upon such terms as he may deem necessary to assure that any new motorcycle covered by the certificate will meet the requirements of the Act and of this subpart.

(4) The certificate will cover all vehicles described by the manufacturer.

(5)(i) If, after a review of the statements and descriptions submitted by the manufacturer, the Administrator determines that the applicable requirements have not been met, he will notify the manufacturer in writing, setting forth the basis for his determination. The manufacturer may request a hearing on the Administrator's determination.

(ii) If the manufacturer does not request a hearing or present the required information the Administrator will deny certification.

[42 FR 1126, Jan. 5, 1977, as amended at 42 FR 56738, Oct. 28, 1977; 46 FR 50496, Oct. 13, 1981; 47 FR 49807, Nov. 2, 1982; 71 FR 51487, Aug. 30, 2006]

§ 86.438–78 Amendments to the application.

(a) The manufacturer shall inform the Administrator by way of amendment to the application of any proposed changes to vehicles in production or additional vehicles to be produced. The Administrator will, if appropriate, select a new test vehicle. Except as provided in § 86.439, no changes may be instituted until approved by the Administrator.

(b) The Administrator may allow reduced testing.

§ 86.439–78 Alternative procedure for notification of additions and changes.

(a)(1) A manufacturer may, in lieu of notifying the Administrator in advance of an addition of a vehicle or a change in a vehicle under § 86.438–78, notify the Administrator concurrently with the addition of a vehicle or the making of a change in a vehicle if the manufacturer determines that following the change all vehicles affected by the addition or change will still meet the applicable emission standards.

(2) Such notification shall include a full description of the addition or change and any supporting documentation the manufacturer may include to

support the manufacturer's determination that the addition or change does not cause noncompliance.

(3) The manufacturer's determination that the addition or change does not cause noncompliance shall be based on an engineering evaluation of the addition or change and/or testing.

(b) [Reserved]

(c)(1) The Administrator may require that additional emission testing be performed to support the manufacturer's original determination submitted in accordance with paragraph (a) of this section.

(2) If additional testing is required, the Administrator shall proceed as in § 86.438–78.

(3) Additional test data, if requested, must be provided within 30 days of the request or the manufacturer must rescind the addition or change immediately.

(4) The Administrator may grant additional time to complete testing.

(5) If based on this additional testing or any other information, the Administrator determines that the vehicles affected by the addition or change do not meet the applicable standards, the Administrator will notify the manufacturer to rescind the addition or change immediately upon receipt of the notification.

(d) Election to produce vehicles under this section will be deemed to be a consent to recall all vehicles which the Administrator determines under § 86.438–78 do not meet applicable standards, and to cause such nonconformity to be remedied at no expense to the owner.

[49 FR 48139, Dec. 10, 1984]

§ 86.440–78 Maintenance of records.

(a) The manufacturer of any motorcycle subject to any of the standards or procedures prescribed in this subpart shall establish, maintain and retain the following adequately organized and indexed records;

(1) *General records.* (i)(A) Identification and description of all certification vehicles for which testing is required under this subpart.

(B) A description of all emission control systems which are installed on or incorporated in each certification vehicle.

(C) A description of all procedures used to test each such certification vehicle.

(ii) A properly completed application, following the format prescribed by the U.S. EPA for the appropriate year of production, fulfills each of the requirements of this paragraph.

(2) *Individual records.* (i) A brief history of each motocycle used for certification under this subpart including:

(A)(*1*) In the case where a current production engine is modified for use in a certification vehicle, a description of the process by which the engine was selected and of the modification made.

(*2*) In the case where the engine for a certification vehicle is not derived from a current production engine, a general description of the build-up of the engine (e.g., experimental heads were cast and machined according to supplied drawings, etc.)

(*3*) In both cases above, a description of the origin and selection process for the carburetor, fuel system, emission control system components, and exhaust after treatment device shall be included.

(*4*) The required description shall specify the steps taken to assure that the certification vehicle with respect to its engine, drive train, fuel system, emission control system components, exhaust after treatment device, vehicle mass, or any other device or component that can reasonably be expected to influence exhaust emissions, will be representative of production vehicles, and that either all components and/or vehicle construction processes, component inspection and selection techniques, and assembly techniques employed in constructing such vehicles are reasonably likely to be implemented for production vehicles, or they are as closely analogous as practicable to planned construction and assembly processes.

(B) A complete record of all emission tests performed (except tests performed by EPA directly) including test results, the date and purpose of each test, and the distance accumulated on the vehicle.

(C) The date of each service accumulation run, listing the distance accumulated.

(D) [Reserved]

(E) A record and description of all maintenance and other servicing performed, giving the date of the maintenance or service and the reason for it.

(F) A record and description of each test performed to diagnose engine or emissions control system performance, giving the date and time of the test and the reason for it.

(G) [Reserved]

(H) A brief description of any significant events affecting the vehicle during any time in the period covered by the history, not described by an entry under one of the previous headings, including such extraordinary events as vehicle accidents or dynamometer runaway.

(ii) Each such history shall be started on the date that the first of any of the selection or build-up activities in paragraph (a)(2)(i)(A) of this section occurred with respect to the certification vehicle, shall be updated each time the operational status of the vehicle changes or additional work is performed on it, and shall be kept in a designated location.

(3) All records, other than routine emission test records, required to be maintained under this subpart shall be retained by the manufacturer for a period of six (6) years after the issuance of all certificates of conformity to which they relate. Routine emission test records shall be retained by the manufacturer for a period of one (1) year after issuance of all certificates of conformity to which they relate. Records may be retained as hard copy or reduced to microfilm, punch cards, etc., depending on the record retention procedures of the manufacturer: *Provided* That, in every case, all the information contained in the hard copy shall be retained.

[42 FR 1126, Jan. 5, 1977, as amended at 42 FR 56738, Oct. 28, 1977; 49 FR 48140, Dec. 10, 1984]

§ 86.441–78 Right of entry.

(a) Any manufacturer who has applied for certification of a new motorcycle subject to certification tests under this subpart shall admit or cause to be admitted any EPA Enforcement Officer during operating hours on presentation of any credentials to any of the following:

(1) Any facility where any such tests or any procedures or activities connected with such tests are or were performed.

(2) Any facility where any new motorcycle which is being, was or is to be tested is present.

(3) Any facility where any construction process or assembly process used in the modification or build-up of such a vehicle into a certification vehicle is taking place or has taken place.

(4) Any facility where any record or other document relating to any of the above is located.

(b) Upon admission to any facility referred to in paragraph (c)(1) of this section, any EPA Enforcement Officer shall be allowed:

(1) To inspect and monitor any part or aspect of such procedures, activities, and testing facilities, including, but not limited to, monitoring vehicle preconditioning, emissions tests and service accumulation, maintenance, and vehicle soak and storage procedures; and to verify correlation or calibration of test equipment;

(2) To inspect and make copies of any such records, designs, or other documents; and

(3) To inspect and/or photograph any part or aspect of any such certification vehicle and any components to be used in the construction thereof.

(c) In order to allow the Administrator to determine whether or not production motorcycles conform in all material respects to the design specifications which applied to those vehicles described in the application for certification for which a certificate of conformity has been issued and to standards prescribed under section 202 of the Act, any manufacturer shall admit any EPA Enforcement Officer on presentation of credentials to both:

(1) Any facility where any document design, or procedure relating to the translation of the design and construction of engines and emission related components described in the application for certification or used for certification testing into production vehicles is located or carried on; and

(2) Any facility where any motorcycles to be introduced into commerce are manufactured or assembled.

(d) On admission to any such facility referred to in paragraph (c)(3) of this section, any EPA Enforcement Officer shall be allowed:

(1) To inspect and monitor any aspects of such manufacture or assembly and other procedures;

(2) To inspect and make copies of any such records, documents or designs; and

(3) To inspect and photograph any part or aspect of any such new motorcycles and any component used in the assembly thereof that are reasonably related to the purpose of his entry.

(e) Any EPA Enforcement Officer shall be furnished by those in charge of a facility being inspected with such reasonable assistance as he may request to help him discharge any function listed in this paragraph. Each applicant for or recipient of certification is required to cause those in charge of a facility operated for its benefit to furnish such reasonable assistance without charge to EPA whether or not the applicant controls the facility.

(f) The duty to admit or cause to be admitted any EPA Enforcement Officer applies whether or not the applicant owns or controls the facility in question and applies both to domestic and to foreign manufacturers and facilities. EPA will not attempt to make any inspections which it has been informed that local law forbids. However, if local law makes it impossible to do what is necessary to insure the accuracy of data generated at a facility, no informed judgment that a vehicle or engine is certifiable or is covered by a certificate can properly be based on that data. It is the responsibility of the manufacturer to locate its testing and manufacturing facilities in jurisdictions where this situation will not arise.

(g) For purposes of this section:

(1) *Presentation of credentials* shall mean display of the document designating a person as an EPA Enforcement Officer.

(2) Where vehicle, component, or engine storage areas or facilities are concerned, *operating hours* shall mean all times during which personnel other than custodial personnel are at work in the vicinity of the area or facility and have access to it.

(3) Where facilities or areas other than those covered by paragraph (g)(2) of this section are concerned, *operating hours* shall mean all times during which an assembly line is in operation or all times during which testing, maintenance, service accumulation, production or compilation of records, or any other procedure or activity related to certification testing, to translation of designs from the test stage to the production stage, or to vehicle manufacture or assembly is being carried out in a facility.

(4) *Reasonable assistance* includes, but is not limited to, clerical, copying, interpretation and translation services, the making available on request of personnel of the facility being inspected during their working hours to inform the EPA Enforcement Officer of how the facility operates and to answer his questions, and the performance on request of emissions tests on any vehicle which is being, has been, or will be used for certification testing. Such tests shall be nondestructive, but may require appropriate service accumulation. A manufacturer may be compelled to cause the personal appearance of any employee at such a facility before an EPA Enforcement Officer by written request for his appearance, signed by the Assistant Administrator for Enforcement, served on the manufacturer. Any such employee who has been instructed by the manufacturer to appear will be entitled to be accompanied, represented, and advised by counsel. No counsel who accompanies, represents, or advises an employee compelled to appear may accompany, represent, or advise any other person in the investigation.

(5) Any entry without 24 hours prior written or oral notification to the affected manufacturer shall be authorized in writing by the Assistant Administrator for Enforcement.

§ 86.442–78 Denial, revocation, or suspension of certification.

(a) Notwithstanding the fact that any certification vehicle(s) may comply with other provisions of this subpart, the Administrator may withhold or deny the issuance of a certificate of conformity (or suspend or revoke any

such certificate which has been issued) with respect to any such vehicle(s) if:

(1) The manufacturer submits false or incomplete information in his application for certification thereof; or

(2) The manufacturer renders inaccurate or invalid any test data which he submits pertaining thereto or otherwise circumvents the intent of the Act or of this subpart with respect to such vehicle; or

(3) Any EPA Enforcement Officer is denied access on the terms specified in § 86.441 to any facility or portion thereof which contains any of the following:

(i) The vehicle, or

(ii) Any components used or considered for use in its modification or build-up into a certification vehicle, or

(iii) Any production vehicle which is or will be claimed by the manufacturer to be covered by the certificate, or

(iv) Any step in the construction of a vehicle described in paragraph (c) of this section, or

(v) Any records, documents, reports, or histories required by this part to be kept concerning any of the above.

(4) Any EPA Enforcement Officer is denied ''reasonable assistance'' (as defined in § 86.444) in examining any of the items listed in paragraph (a)(1)(iii) of this section.

(b) The sanctions of withholding, denying, revoking, or suspending of a certificate may be imposed for the reasons in paragraph (a) of this section only when the infraction is substantial.

(c) In any case in which a manufacturer knowingly submits false or inaccurate information, or knowingly renders inaccurate or invalid any test data, or commits any fraudulent acts and such acts contribute substantially to the Administrator's decision to issue a certificate of conformity, the Administrator may deem such certificate void ab initio.

(d) In any case in which certification of a vehicle is proposed to be withheld, denied, revoked, or suspended under paragraph (a) (3) or (4) of this section, and in which the Administrator has presented to the manufacturer involved reasonable evidence that a violation of § 86.441 in fact occurred, the manufacturer, if the wishes to contend that, even though the violation occurred, the vehicle in question was not involved in the violation to a degree that would warrant withholding, denial, revocation, or suspension of certification under either paragraph (a) (3) or (4) of this section, shall have the burden of establishing that contention to the satisfaction of the Administrator.

(e) Any revocation or suspension of certification under paragraph (a) of this section shall:

(1) Be made only after the manufacturer concerned has been offered an opportunity for a hearing conducted in accordance with § 86.444 hereof.

(2) Extend no further than to forbid the introduction into commerce of vehicles previously covered by the certification which are still in the hands of the manufacturer, except in cases of such fraud or other misconduct as makes the certification invalid ab initio.

(f) The manufacturer may request in the form and manner specified in § 86.443 that any determination made by the Administrator under paragraph (a) of this section to withhold or deny certification be reviewed in a hearing conducted in accordance with § 86.444. If the Administrator finds, after a review of the request and supporting data, that the request raises a substantial factual issue, he will grant the request with respect to such issue.

[42 FR 1126, Jan. 5, 1977, as amended at 42 FR 56738, Oct. 28, 1977]

§ 86.443–78 Request for hearing.

The manufacturer may request a hearing on the Administrator's determination as described in 40 CFR part 1068, subpart G.

[81 FR 73979, Oct. 25, 2016]

§ 86.444–78 Hearings on certification.

If a manufacturer's request for a hearing is approved, EPA will follow the hearing procedures specified in 40 CFR part 1068, subpart G.

[81 FR 73979, Oct. 25, 2016]

§ 86.445–2006 What temporary provisions address hardship due to unusual circumstances?

(a) After considering the circumstances, the Director of the Office of Transportation and Air Quality may permit you to introduce into commerce

highway motorcycles that do not comply with emission standards if all the following conditions and requirements apply:

(1) Unusual circumstances that are clearly outside your control and that could not have been avoided with reasonable discretion prevent you from meeting requirements from this chapter.

(2) You exercised prudent planning and were not able to avoid the violation; you have taken all reasonable steps to minimize the extent of the nonconformity.

(3) Not having the exemption will jeopardize the solvency of your company.

(4) No other allowances are available under the regulations of this part to avoid the impending violation, excluding those in § 86.446.

(b) To apply for an exemption, you must send the Designated Compliance Officer a written request as soon as possible before you are in violation. In your request, show that you meet all the conditions and requirements in paragraph (a) of this section.

(c) Include in your request a plan showing how you will meet all the applicable requirements as quickly as possible.

(d) You must give us other relevant information if we ask for it.

(e) We may include reasonable additional conditions on an approval granted under this section, including provisions to recover or otherwise address the lost environmental benefit or paying fees to offset any economic gain resulting from the exemption. For example, in the case of multiple tiers of emission standards, we may require that you meet the less stringent standards.

(f) Add a permanent, legible label, written in block letters in English, to a readily visible part of each motorcycle exempted under this section. This label must include at least the following items:

(1) The label heading ''EMISSION CONTROL INFORMATION''.

(2) Your corporate name and trademark.

(3) Engine displacement (in liters) and model year of the engine or whom to contact for further information.

(4) The statement ''THIS MOTORCYCLE IS EXEMPT UNDER 40 CFR 86.445–2006 FROM EMISSION STANDARDS AND RELATED REQUIREMENTS.''.

[69 FR 2437, Jan. 15, 2004]

§ 86.446–2006 What are the provisions for extending compliance deadlines for small-volume manufacturers under hardship?

(a) After considering the circumstances, the Director of the Office of Transportation and Air Quality may extend the compliance deadline for you to meet new or revised emission standards, as long as you meet all the conditions and requirements in this section.

(b) To be eligible for this exemption, you must qualify as a small-volume manufacturer under § 86.410–2006(e).

(c) To apply for an extension, you must send the Designated Compliance Officer a written request. In your request, show that all the following conditions and requirements apply:

(1) You have taken all possible business, technical, and economic steps to comply.

(i) In the case of importers, show that you attempted to find a manufacturer capable of supplying complying products as soon as you became aware of the applicable requirements, but were unable to do so.

(ii) For all other manufacturers, show that the burden of compliance costs prevents you from meeting the requirements of this chapter.

(2) Not having the exemption will jeopardize the solvency of your company.

(3) No other allowances are available under the regulations in this part to avoid the impending violation, excluding those in § 86.445.

(d) In describing the steps you have taken to comply under paragraph (c)(1) of this section, include at least the following information:

(1) Describe your business plan, showing the range of projects active or under consideration.

(2) Describe your current and projected financial standing, with and without the burden of complying fully with the regulations in this part.

(3) Describe your efforts to raise capital to comply with regulations in this

part (this may not apply for importers).

(4) Identify the engineering and technical steps you have taken or plan to take to comply with the regulations in this part.

(5) Identify the level of compliance you can achieve. For example, you may be able to produce engines that meet a somewhat less stringent emission standard than the regulations require.

(e) Include in your request a plan showing how you will meet all the applicable requirements as quickly as possible.

(f) You must give us other relevant information if we ask for it.

(g) An authorized representative of your company must sign the request and include the statement: ''All the information in this request is true and accurate, to the best of my knowledge.''

(h) Send your request for this extension at least nine months before new standards apply. Do not send your request before the regulations in question apply to other manufacturers.

(i) We may include reasonable requirements on an approval granted under this section, including provisions to recover or otherwise address the lost environmental benefit. For example, we may require that you meet a less stringent emission standard or buy and use available emission credits.

(j) We will approve extensions of up to one year. We may review and revise an extension as reasonable under the circumstances.

(k) Add a permanent, legible label, written in block letters in English, to a readily visible part of each motorcycle exempted under this section. This label must include at least the following items:

(1) The label heading ''EMISSION CONTROL INFORMATION''.

(2) Your corporate name and trademark.

(3) Engine displacement (in liters) and model year of the motorcycle or whom to contact for further information.

(4) The statement ''THIS MOTORCYCLE IS EXEMPT UNDER 40 CFR 86.446 FROM EMISSION STANDARDS AND RELATED REQUIREMENTS.''.

[69 FR 2437, Jan. 15, 2004]

§ 86.447–2006 What provisions apply to motorcycle engines below 50 cc that are certified under the Small SI program or the Recreational-vehicle program?

(a) *General provisions*. If you are an engine manufacturer, this section allows you to introduce into commerce a new highway motorcycle (that is, a motorcycle that is a motor vehicle) if it has an engine below 50 cc that is already certified to the requirements that apply to engines or vehicles under 40 CFR part 90 or 1051 for the appropriate model year. If you comply with all the provisions of this section, we consider the certificate issued under 40 CFR part 90 or 1051 for each engine or vehicle to also be a valid certificate of conformity under this part 86 for its model year, without a separate application for certification under the requirements of this part 86. See § 86.448–2006 for similar provisions that apply to vehicles that are certified to chassis-based standards under 40 CFR part 1051.

(b) *Vehicle-manufacturer provisions*. If you are not an engine manufacturer, you may produce highway motorcycles using nonroad engines below 50 cc under this section as long as you meet all the requirements and conditions specified in paragraph (d) of this section. If you modify the nonroad engine in any of the ways described in paragraph (d)(2) of this section for installation in a highway motorcycle, we will consider you a manufacturer of a new highway motorcycle. Such engine modifications prevent you from using the provisions of this section.

(c) *Liability*. Engines for which you meet the requirements of this section, and vehicles containing these engines, are exempt from all the requirements and prohibitions of this part, except for those specified in this section. Engines and vehicles exempted under this section must meet all the applicable requirements from 40 CFR part 90 or 1051. This applies to engine manufacturers, vehicle manufacturers who use these engines, and all other persons as if these engines were used in recreational vehicles or other nonroad applications. The prohibited acts of 42 U.S.C. 7522 apply to these new highway motorcycles; however, we consider the certificate issued under 40 CFR part 90 or

1051 for each engine to also be a valid certificate of conformity under this part 86 for its model year. If we make a determination that these engines do not conform to the regulations during their useful life, we may require you to recall them under 40 CFR part 86, 90, or 1068.

(d) *Specific requirements.* If you are an engine or vehicle manufacturer and meet all the following criteria and requirements regarding your new engine or vehicle, the highway motorcycle is eligible for an exemption under this section:

(1) Your engine must be below 50 cc and must be covered by a valid certificate of conformity for Class II engines issued under 40 CFR part 90 or for recreational vehicles under 40 CFR part 1051.

(2) You must not make any changes to the certified engine that could reasonably be expected to increase its exhaust emissions for any pollutant, or its evaporative emissions, if applicable. For example, if you make any of the following changes to one of these engines, you do not qualify for this exemption:

(i) Change any fuel system or evaporative system parameters from the certified configuration.

(ii) Change, remove, or fail to properly install any other component, element of design, or calibration specified in the engine manufacturer's application for certification. This includes aftertreatment devices and all related components.

(iii) Modify or design the engine cooling system so that temperatures or heat rejection rates are outside the original engine manufacturer's specified ranges.

(3) You must show that fewer than 50 percent of the engine family's total sales in the United States are used in highway motorcycles. This includes engines used in any application, without regard to which company manufactures the vehicle or equipment. In addition, if you manufacture highway motorcycles, you must show that fewer than 50 percent of the engine family's total sales in the United States are highway motorcycles. Show that you meet the engine-sales criterion as follows:

(i) If you are the original manufacturer of the engine, base this showing on your sales information.

(ii) In all other cases, you must get the original manufacturer of the engine to confirm the engine sales volumes based on its sales information.

(4) You must ensure that the engine has the label we require under 40 CFR part 90 or 1051.

(5) You must add a permanent supplemental label to the engine in a position where it will remain clearly visible after installation in the vehicle. In the supplemental label, do the following:

(i) Include the heading: ''HIGHWAY MOTORCYCLE ENGINE EMISSION CONTROL INFORMATION''.

(ii) Include your full corporate name and trademark. You may instead include the full corporate name and trademark of another company you choose to designate.

(iii) State: ''THIS ENGINE WAS ADAPTED FOR HIGHWAY USE WITHOUT AFFECTING ITS EMISSION CONTROLS.''.

(iv) State the date you finished installation (month and year), if applicable.

(6) Send the Designated Compliance Officer a signed letter by the end of each calendar year (or less often if we tell you) with all the following information:

(i) Identify your full corporate name, address, and telephone number.

(ii) List the engine or vehicle models you expect to produce under this exemption in the coming year.

(iii) State: ''We produce each listed [engine or vehicle] model for without making any changes that could increase its certified emission levels, as described in 40 CFR 86.447–2006.''.

(e) *Failure to comply.* If your highway motorcycles do not meet the criteria listed in paragraph (d) of this section, they will be subject to the standards, requirements, and prohibitions of this part 86 and the certificate issued under 40 CFR part 90 or 1051 will not be deemed to also be a certificate issued under this part 86. Introducing these engines into commerce without a valid exemption or certificate of conformity under this part violates the prohibitions in 40 CFR part 85.

(f) *Data submission.* We may require you to send us emission test data on any applicable nonroad duty cycles.

(g) *Participation in averaging, banking and trading.* Engines or vehicles adapted for recreational use under this section may not generate or use emission credits under this part 86. These engines or vehicles may generate credits under the ABT provisions in 40 CFR part 90 or 1051. These engines or vehicles must use emission credits under 40 CFR part 90 or 1051 if they are certified to an FEL that exceeds an applicable standard.

[70 FR 40435, July 13, 2005]

§ 86.448–2006 What provisions apply to vehicles certified under the Recreational-vehicle program?

(a) *General provisions.* If you are a highway-motorcycle manufacturer, this section allows you to introduce into commerce a new highway motorcycle with an engine below 50 cc if it is already certified to the requirements that apply to recreational vehicles under 40 CFR parts 1051. A highway motorcycle is a motorcycle that is a motor vehicle. If you comply with all of the provisions of this section, we consider the certificate issued under 40 CFR part 1051 for each recreational vehicle to also be a valid certificate of conformity for the motor vehicle under this part 86 for its model year, without a separate application for certification under the requirements of this part 86. See § 86.447–2006 for similar provisions that apply to nonroad engines produced for highway motorcycles.

(b) *Nonrecreational-vehicle provisions.* If you are not a recreational-vehicle manufacturer, you may produce highway motorcycles from recreational vehicles with engines below 50 cc under this section as long as you meet all the requirements and conditions specified in paragraph (d) of this section. If you modify the recreational vehicle or its engine in any of the ways described in paragraph (d)(2) of this section for installation in a highway motorcycle, we will consider you a manufacturer of a new highway motorcycle. Such modifications prevent you from using the provisions of this section.

(c) *Liability.* Vehicles for which you meet the requirements of this section are exempt from all the requirements and prohibitions of this part, except for those specified in this section. Engines and vehicles exempted under this section must meet all the applicable requirements from 40 CFR part 1051. This applies to engine manufacturers, vehicle manufacturers, and all other persons as if the highway motorcycles were recreational vehicles. The prohibited acts of 42 U.S.C. 7522 apply to these new highway motorcycles; however, we consider the certificate issued under 40 CFR part 1051 for each recreational vehicle to also be a valid certificate of conformity for the highway motorcycle under this part 86 for its model year. If we make a determination that these engines or vehicles do not conform to the regulations during their useful life, we may require you to recall them under 40 CFR part 86 or 40 CFR 1068.505.

(d) *Specific requirements.* If you are a recreational-vehicle manufacturer and meet all the following criteria and requirements regarding your new highway motorcycle and its engine, the highway motorcycle is eligible for an exemption under this section:

(1) Your motorcycle must have an engine below 50 cc and it must be covered by a valid certificate of conformity as a recreational vehicle issued under 40 CFR part 1051.

(2) You must not make any changes to the certified recreational vehicle that we could reasonably expect to increase its exhaust emissions for any pollutant, or its evaporative emissions if it is subject to evaporative-emission standards. For example, if you make any of the following changes, you do not qualify for this exemption:

(i) Change any fuel system parameters from the certified configuration.

(ii) Change, remove, or fail to properly install any other component, element of design, or calibration specified in the vehicle manufacturer's application for certification. This includes aftertreatment devices and all related components.

(iii) Modify or design the engine cooling system so that temperatures or heat rejection rates are outside the original vehicle manufacturer's specified ranges.

(3) You must show that fewer than 50 percent of the engine family's total sales in the United States are used in highway motorcycles. This includes highway and off-highway motorcycles, without regard to which company completes the manufacturing of the highway motorcycle. Show this as follows:

(i) If you are the original manufacturer of the vehicle, base this showing on your sales information.

(ii) In all other cases, you must get the original manufacturer of the vehicle to confirm this based on their sales information.

(4) The highway motorcycle must have the vehicle emission control information we require under 40 CFR part 1051.

(5) You must add a permanent supplemental label to the highway motorcycle in a position where it will remain clearly visible. In the supplemental label, do the following:

(i) Include the heading: ''HIGHWAY MOTORCYCLE ENGINE EMISSION CONTROL INFORMATION''.

(ii) Include your full corporate name and trademark. You may instead include the full corporate name and trademark of another company you choose to designate.

(iii) State: ''THIS VEHICLE WAS ADAPTED FOR HIGHWAY USE WITHOUT AFFECTING ITS EMISSION CONTROLS.''.

(iv) State the date you finished modifying the vehicle (month and year), if applicable.

(6) Send the Designated Compliance Officer a signed letter by the end of each calendar year (or less often if we tell you) with all the following information:

(i) Identify your full corporate name, address, and telephone number.

(ii) List the highway motorcycle models you expect to produce under this exemption in the coming year.

(iii) State: ''We produced each listed highway motorcycle without making any changes that could increase its certified emission levels, as described in 40 CFR 86.448–2006.''.

(e) *Failure to comply*. If your highway motorcycles do not meet the criteria listed in paragraph (d) of this section, they will be subject to the standards, requirements, and prohibitions of this part 86 and 40 CFR part 85, and the certificate issued under 40 CFR part 1051 will not be deemed to also be a certificate issued under this part 86. Introducing these motorcycles into commerce without a valid exemption or certificate of conformity under this part violates the prohibitions in 40 CFR part 85.

(f) *Data submission*. We may require you to send us emission test data on the duty cycle for Class I motorcycles.

(g) *Participation in averaging, banking and trading*. Recreational vehicles adapted for use as highway motorcycles under this section may not generate or use emission credits under this part 86. These engines may generate credits under the ABT provisions in 40 CFR part 1051. These engines must use emission credits under 40 CFR part 1051 if they are certified to an FEL that exceeds an applicable standard.

[70 FR 40436, July 13, 2005]

§ 86.449 Averaging provisions.

(a) This section describes how and when averaging may be used to show compliance with applicable HC + NO_X emission standards. Emission credits may not be banked for use in later model years, except as specified in paragraph (j) of this section.

(1) Compliance with the Class I and Class II HC + NO_X standards set forth in § 86.410–2006 (f) may be demonstrated using the averaging provisions of this section. To do this you must show that your average emission levels are at or below the applicable standards in § 86.410–2006.

(2) Compliance with the Class III HC + NO_X standards set forth in § 86.410–2006 (a)(2) may be demonstrated using the averaging provisions of this section. To do this you must show that your average emission levels are at or below the applicable standards in § 86.410–2006.

(3) Family emission limits (FELs) may not exceed the following caps:

Class	Tier	Model year	FEL cap (g/km)
			$HC + NO_X$
Class I or II	Tier 1	2006 and later	5.0
Class III	Tier 1	2006–2009	5.0
	Tier 2	2010 and later	2.5

(b) Do not include any exported vehicles in the certification averaging program. Include only motorcycles certified under this subpart and intended for sale in the United States.

(c) To use the averaging program, do the following things:

(1) Certify each vehicle to a family emission limit.

(2) Calculate a preliminary average emission level according to paragraph (d) of this section using projected production volumes for your application for certification.

(3) After the end of your model year, calculate a final average emission level according to paragraph (d) of this section for each averaging set for which you manufacture or import motorcycles.

(d) Calculate your average emission level for each averaging set for each model year according to the following equation and round it to the nearest tenth of a g/km. Use consistent units throughout the calculation. The averaging sets are defined in paragraph (k) of this section.

(1) Calculate the average emission level as:

$$\text{Emission level} = \left[\sum_i (\text{FEL})_i \times (\text{UL})_i \times (\text{Production})_i\right] \Big/ \left[\sum_i (\text{Production})_i \times (\text{UL})_i\right]$$

Where:

FEL_i = The FEL to which the engine family is certified.

UL_i = The useful life of the engine family.

$Production_i$ = The number of vehicles in the engine family.

(2) Use production projections for initial certification, and actual production volumes to determine compliance at the end of the model year.

(e)(1) Maintain and keep five types of properly organized and indexed records for each group and for each emission family:

(i) Model year and EPA emission family.

(ii) FEL.

(iii) Useful life.

(iv) Projected production volume for the model year.

(v) Actual production volume for the model year.

(2) Keep paper records of this information for three years from the due date for the end-of-year report. You may use any additional storage formats or media if you like.

(3) Follow paragraphs (f) through (i) of this section to send us the information you must keep.

(4) We may ask you to keep or send other information necessary to implement this subpart.

(f) Include the following information in your application for certification:

(1) A statement that, to the best of your belief, you will not have a negative credit balance for any motorcycle when all credits are calculated. This means that if you believe that your average emission level will be above the standard (i.e., that you will have a deficit for the model year), you must have banked credits pursuant to paragraph (j) of this section to offset the deficit.

(2) Detailed calculations of projected emission credits (zero, positive, or negative) based on production projections. If you project a credit deficit, state the source of credits needed to offset the credit deficit.

(g) At the end of each model year, send an end-of-year report.

(1) Make sure your report includes the following things:

(i) Calculate in detail your average emission level and any emission credits based on actual production volumes.

(ii) If your average emission level is above the allowable average standard, state the source of credits needed to offset the credit deficit.

(2) Base your production volumes on the point of first retail sale. This point is called the final product-purchase location.

(3) Send end-of-year reports to the Designated Compliance Officer within 120 days of the end of the model year. If you send reports later, EPA may void your certificate ab initio.

(4) If you generate credits for banking pursuant to paragraph (j) of this section and you do not send your end-of-year reports within 120 days after the end of the model year, you may not use the credits until we receive and review your reports. You may not use projected credits pending our review.

(5) You may correct errors discovered in your end-of-year report, including errors in calculating credits according to the following table:

If . . .	And if . . .	Then we . . .
(i) Our review discovers an error in your end-of-year report that increases your credit balance.	The discovery occurs within 180 days of receipt.	Restore the credits for your use.
(ii) You discover an error in your report that increases your credit balance.	The discovery occurs within 180 days of receipt.	Restore the credits for your use.
(iii) We or you discover an error in your report that increases your credit balance.	The discovery occurs more than 180 days after receipt.	Do not restore the credits for your use.
(iv) We discover an error in your report that reduces your credit balance.	At any time after receipt	Reduce your credit balance.

(h) Include in each report a statement certifying the accuracy and authenticity of its contents.

(i) We may void a certificate of conformity for any emission family if you do not keep the records this section requires or give us the information when we ask for it.

(j) You may include Class III motorcycles that you certify with HC + NO_X emissions below 0.8 g/km in the following optional early banking program:

(1) To include a Class III motorcycle in the early banking program, assign it an emission rate of 0.8 g/km when calculating your average emission level for compliance with the Tier 1 standards.

(2)(i) Calculate bankable credits from the following equation:

Bonus credit = Y × [(0.8 g/km − Certified emission level)] × [(Production volume of engine family) × (Useful life)]

(ii) The value of Y is defined by the model year and emission level, as shown in the following table:

Model year	Multiplier (Y) for use in MY 2010 or later corporate averaging	
	If your certified emission level is less than 0.8 g/km, but greater than 0.4 g/km, then Y = . . .	If your certified emission level is less than 0.4 g/km, then Y = . . .
2003 through 2006	1.500	3.000
2007	1.375	2.500
2008	1.250	2.000
2009	1.125	1.500

(3) Credits banked under this paragraph (j) may be use for compliance with any 2010 or later model year standards as follows:

(i) If your average emission level is above the average standard, calculate your credit deficit according to the following equation, rounding to the nearest tenth of a gram:

Deficit = (Emission Level − Average Standard) × (Total Annual Production) × (Useful Life)

(ii) Credit deficits may be offset using banked credits.

(k) Credits may not be exchanged across averaging sets except as explicitly allowed by this paragraph (k).

(1) There are two averaging sets:

(i) Class I and Class II motorcycles certified to HC + NO_X standards.

(ii) Class III motorcycles.

(2) Where a manufacturer's average HC + NO_X emission level for Class III motorcycles (as calculated under paragraph (d)(1) of this section) is below the applicable standard, the manufacturer may generate credits that may be used show compliance with HC + NO_X standards for Class I and Class II motorcycles during the same model year. Use the following equations to calculate credits and credit deficits for each class or subclass:

Credit = (Average Standard − Emission Level) × (Total Annual Production) × (Useful Life)

Deficit = (Emission Level − Average Standard) × (Total Annual Production) × (Useful Life)

(l) Manufacturers participating in the averaging program of this section may modify FELs during the model year as specified in this paragraph (l).

(1) Upon notifying EPA, manufacturers may raise the FEL for an engine family and begin labeling motorcycles with the new FEL.

(2) Manufacturers may ask to lower FELs based on test data of production vehicles showing that the motorcycles in the engine family have emissions below the new FEL. Manufacturers must test the motorcycles according to 40 CFR part 1051, subpart D. Manufacturers may not begin labeling motorcycles with the new FEL until they have received EPA approval to do so.

(3) Manufacturers may not change the FEL of any motorcycle that has been placed into service or that is no longer in their possession.

[69 FR 2439, Jan. 15, 2004]

Subpart F—Emission Regulations for 1978 and Later New Motorcycles; Test Procedures

SOURCE: 42 FR 1137, Jan. 5, 1977, unless otherwise noted.

§ 86.501–78 Applicability.

(a) This subpart contains the motorcycle test procedures specified in subpart E.

(b) Provisions of this subpart apply to tests performed by both the Administrator and motor vehicle manufacturers.

§ 86.502–78 Definitions.

(a) The definitions in § 86.402–78 apply to this subpart.

(b) [Reserved]

§ 86.503–78 Abbreviations.

(a) The abbreviations in § 86.403–78 apply to this subpart.

(b) [Reserved]

§ 86.504–78 Section numbering.

(a) The section numbering system described in § 86.404–78 is used in this subpart.

(b) [Reserved]

§ 86.505–2004 Introduction; structure of subpart.

(a) This subpart describes the equipment required and the procedures to follow in order to perform exhaust emission tests on motorcycles. Subpart E sets forth the testing requirements and test intervals necessary to comply with EPA certification procedures. Alternate equipment, procedures, and calculation methods may be used if shown to yield equivalent or superior results, and if approved in advance by the Administrator.

(b) Three topics are addressed in this subpart. Sections 86.508 through 86.515 set forth specifications and equipment requirements; §§ 86.516 through 86.526 discuss calibration methods and frequency; test procedures and data requirements are listed (in approximate order of performance) in §§ 86.527 through 86.544.

(c) For diesel-fueled motorcycles, use the sampling and analytical procedures and the test fuel described in subpart B

of this part for diesel-fueled light-duty vehicles. PM measurement is not required.

[69 FR 2440, Jan. 15, 2004]

§ 86.508–78 Dynamometer.

(a) The dynamometer shall have a single roll with a diameter of at least 0.400 metre.

(b) The dynamometer shall be equipped with a roll revolution counter for measuring actual distance traveled.

(c) Flywheels or other means shall be used to stimulate the inertia specified in § 86.529.

(d) A variable speed cooling blower shall direct air to the vehicle. The blower outlet shall be at least 0.40 m^2 (4.31 ft^2) and shall be squarely positioned between 0.3 m (0.98 ft) and 0.45 m (1.48 ft) in front of the vehicle's front wheel. The velocity of the air at the blower outlet shall be within the following limits (as a function of roll speed):

Actual roll speed	Allowable cooling air speed
0 km/h to 5 km/h	0 km/h to 10 km/h.
5 km/h to 10 km/h	0 km/h to roll speed + 5 km/h.
10 km/h to 50 km/h	Roll speed ±5 km/h.
50 km/h to 70 km/h	Roll speed ±10 pct.
Above 70 km/h	At least 63 km/h.

(e) The dynamometer shall comply with the tolerances in § 86.529.

[42 FR 1137, Jan. 5, 1977, as amended at 42 FR 56738, Oct. 28, 1977]

§ 86.509–90 Exhaust gas sampling system.

(a)(1) *General*. The exhaust gas sampling system is designed to measure the true mass emissions of vehicle exhaust. In the CVS concept of measuring mass emissions, two conditions must be satisfied: the total volume of the mixture of exhaust and dilution air must be measured and a continuously proportioned volume of sample must be collected for analysis. Mass emissions are determined from the sample concentration and totalized flow over the test period.

(2) *Vehicle tailpipe to CVS duct*. For methanol fueled vehicles, cooling of the exhaust gases in the duct connecting the vehicle tailpipe to the CVS shall be minimized. This may be accomplished by:

(i) Using a duct of unrestricted length maintained at a temperature above the maximum dew point of the exhaust, but below 121 °C (250 °F); heating and possibly cooling capabilities are required; or

(ii) Using a short duct (up to 12 feet long) constructed of smooth wall pipe with a minimum of flexible sections, maintained at a temperature above the maximum dew point of the exhaust, but below 121 °C (250 °F), prior to the test and during any breaks in the test and uninsulated during the test (insulation may remain in place and/or heating may occur during testing provided maximum temperature is not exceeded); or

(iii) Using smooth wall duct less than five feet long with no required heating. A maximum of two short flexible connectors are allowed under this option; or

(iv) Omitting the duct and performing the exhaust gas dilution function at the motorcycle tailpipe exit.

(3) *Positive displacement pump*. The Positive Displacement Pump-Constant Volume Sampler (PDP-CVS), Figure F90–1 satisfies the first condition by metering at a constant temperature and pressure through the pump. The total volume is measured by counting the revolutions made by the calibrated positive displacement pump. The proportional samples are achieved by sampling at a constant flow rate. For methanol-fueled motorcycle sample lines for the methanol and formaldehyde samples are heated to prevent condensation. The temperature of the sample lines shall be more than 3 °C (5 °F) above the maximum dew point of the sample, but below 121 °C (250 °F). (Note: For 1990 through 1994 model year methanol-fueled motorcycles, methanol and formaldehyde sampling may be omitted provided the bag sample (hydrocarbons and methanol) is analyzed using a HFID calibrated with methanol.)

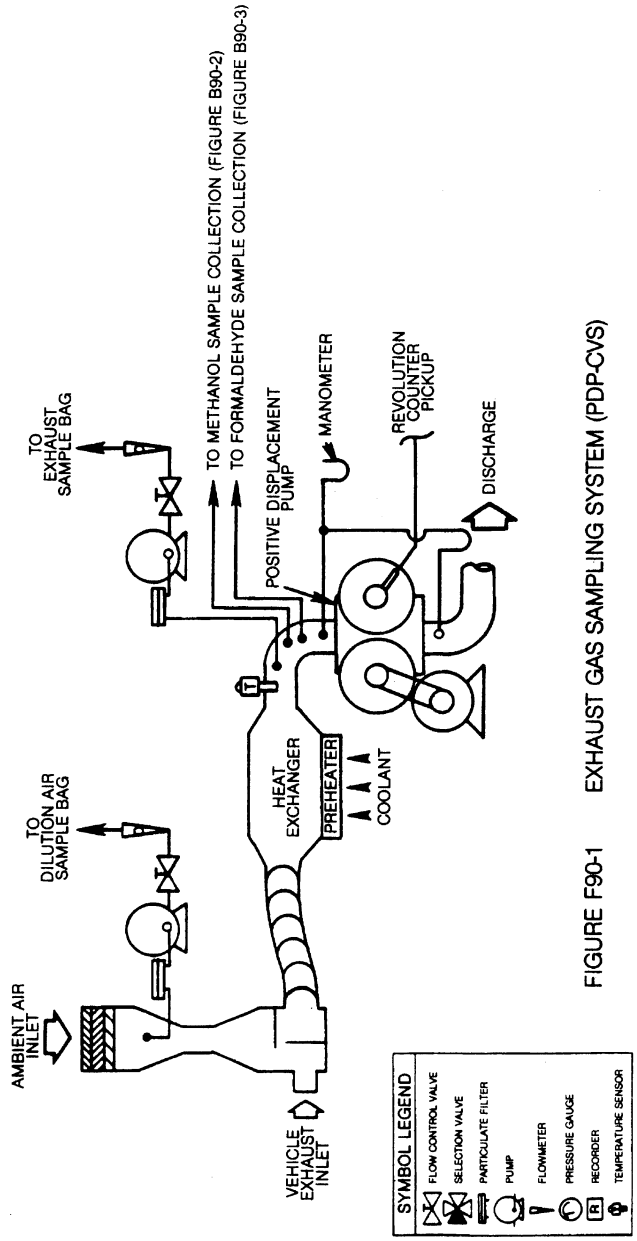

FIGURE F90-1 EXHAUST GAS SAMPLING SYSTEM (PDP-CVS)

(4) *Critical flow venturi.* The operation of the Critical Flow Venturi—Constant Volume Sampler (CFV-CVS) sample system, Figure F90–2, is based upon the principles of fluid dynamics associated with critical flow. Proportional sampling throughout temperature excursions is maintained by use of small

CFVs in the sample lines, which respond to the varying temperatures in the same manner as the main CFV. For methanol-fueled motorcycles, the methanol and formaldehyde sample lines are heated to prevent condensation. The temperature of the sample lines shall be more than 3 °C (5 °F) above the maximum dew point of the sample, but below 121 °C (250 °F). Care must be taken to ensure that the CFVs of the sample probes are not heated since heating of the CFVs would cause loss of proportionality. (Note: For 1990 through 1994 model year methanol-fueled motorcycles, methanol and formaldehyde sampling may be omitted provided the bag sample (hydrocarbons and methanol) is analyzed using a HFID calibrated with methanol.) Total flow per test is determined by continuously computing and integrating instantaneous flow. A low response time temperature sensor is necessary for accurate flow calculation.

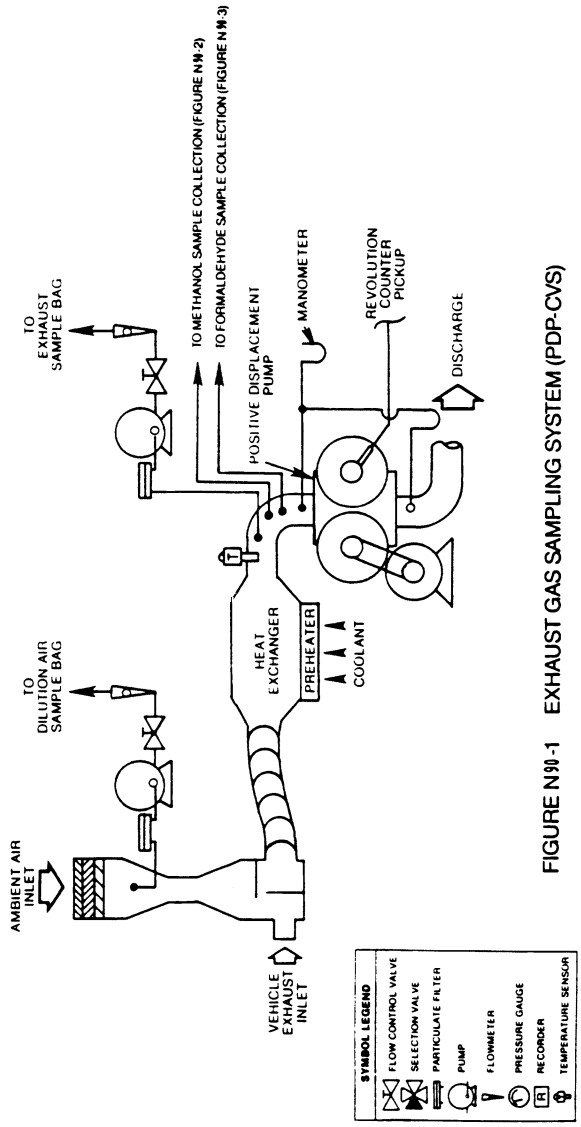

FIGURE N90-1 EXHAUST GAS SAMPLING SYSTEM (PDP-CVS)

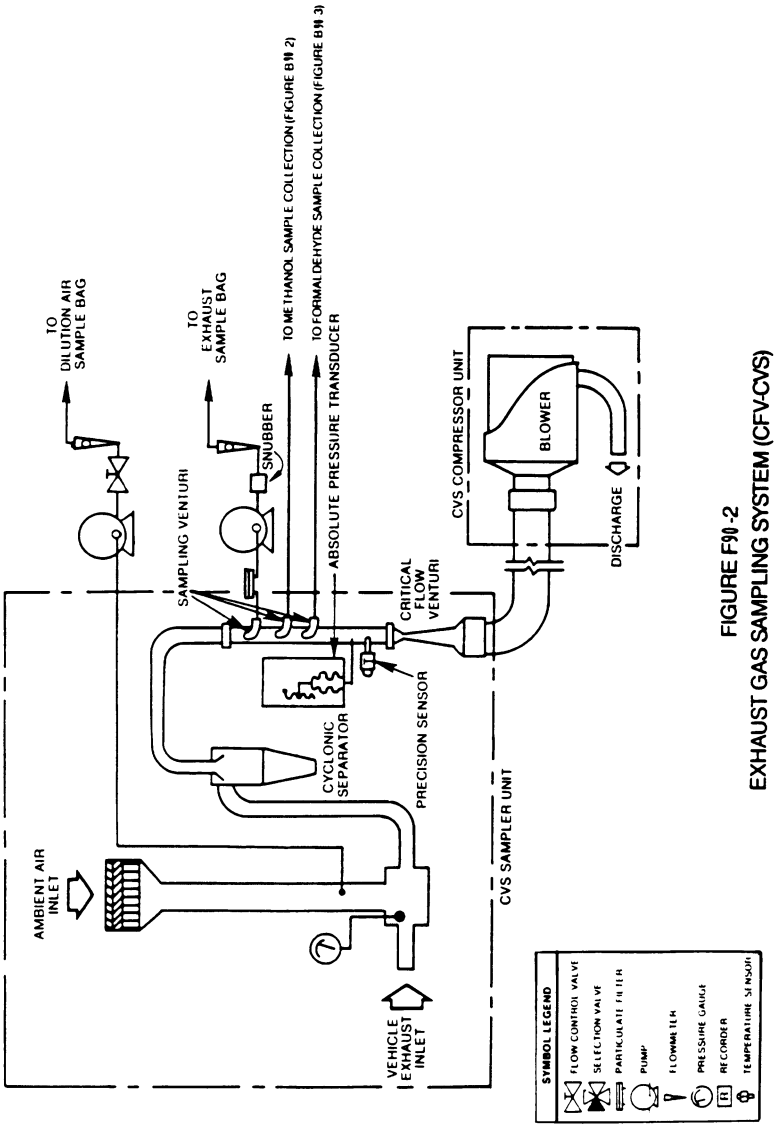

FIGURE F90-2
EXHAUST GAS SAMPLING SYSTEM (CFV-CVS)

(5) *Electronic Flow Control.* The Critical Flow Venturi—Electronic Flow Control—Constant Volume Sampler (CFV-EFC-CVS) system is identical to the CFV-CVS system described in paragraphs (a)(4) and (c) of this section, except that it maintains proportional sampling for methanol and formaldehyde by measuring the CVS flow rate, and electronically controlling sample flow rates. It is recommended that sample volumes be measured by separate flow meters. For methanol-fueled motorcycles, the samples lines for the methanol and formaldehyde samples are heated to prevent condensation. The temperature of the sample lines shall be more than 20 °F (11 °C) above

the maximum dew point of the sample, but below 121 °C (250 °F).

(6) *Other systems.* Other sampling systems may be used if shown to yield equivalent results, and if approved in advance by the Administrator (e.g., a heat exchanger with the CFV-CVS or an electronic flow integrator without a heat exchanger, with the PDP-CVS).

(b) *Component description, PDP-CVS.* The PDP-CVS, Figure F90–1, consists of a dilution air filter and mixing assembly, heat exchanger, positive displacement pump, sampling systems including, probes and sampling lines which, in the case of the methanol-fueled motorcycles, are heated to prevent condensation (heating of the sample lines may be omitted, provided the methanol and formaldehyde sample collection systems are close coupled to the probes thereby preventing loss of sample due to cooling and resulting condensation in the sample lines), and associated valves, pressure and temperature sensors. The PDP-CVS shall conform to the following requirements:

(1) Static pressure variations at the tailpipe(s) of the vehicle shall remain within ±1.25 kPa (±5.02 in H_2O) of the static pressure variations measured during a dynamometer driving cycle with no connection to the tailpipe(s). (Sampling systems capable of maintaining the static pressure to within ±0.25 kPa (±1.00 in. H_2O) will be used by the Administrator if a written request substantiates the need for this closer tolerance.)

(2) The gas mixture temperature, measured at a point immediately ahead of the positive displacement pump, shall be within ±5 °C (9 °F) of the designed operating temperature at the start of the test. The gas mixture temperature variation from its value at the start of the test shall be limited to ±5 °C (9 °F) during the entire test. The temperature measuring system shall have an accuracy and precision of ±1 °C (1.8 °F).

(3) The pressure gauges shall have an accuracy and precision of ±0.4 kPa (±3 mm Hg).

(4) The location of the dilution air inlet shall be placed so as to use test-cell air for dilution and the flow capacity of the CVS shall be large enough to completely eliminate water condensation in the dilution and sampling systems. Control of water condensation with methanol-fueled vehicles is critical. Additional care may also be required to eliminate water condensation when testing natural gas and liquefied petroleum gas-fueled vehicles. (Procedures for determining CVS flow rates are detailed in ''Calculation of Emissions and Fuel Economy When Using Alternative Fuels,'' EPA 460/3–83–009.) Dehumidifying the dilution air before entering the CVS is allowed. Heating the dilution air is also allowed, provided:

(i) The air (or air plus exhaust gas) temperature does not exceed 121 °C (250 °F).

(ii) Calculation of the CVS flow rate necessary to prevent water condensation is based on the lowest temperature encountered in the CVS prior to sampling. (It is recommended that the CVS system be insulated when heated dilution air is used.)

(iii) The dilution ratio is sufficiently high to prevent condensation in bag samples as they cool to room temperature.

(5) Sample collection bags for dilution air and exhaust samples (hydrocarbons and carbon monoide) shall be of sufficient size so as not to impede sample flow. A single dilution air sample, covering the total test period, may be collected for the determination of methanol and formaldehyde background (methanol-fueled motorcycles).

(6) The methanol sample collection system and the formaldehyde sample collection system shall each be of sufficient capacity so as to collect samples of adequate size for analysis without significant impact on the volume of dilute exhaust passing through the PDP. The systems shall also comply with the following requirements that apply to the design of the systems, not to individual tests:

(i) The methanol system shall be designed such that if a test motorcycle continuously emitted the maximum allowable level of methanol (based on all applicable standards) the measured concentration in the primary impinger would exceed either 25 mg/l or a concentration equal to 25 times the limit of detection for the GC analyzer.

(ii) The formaldehyde system shall be designed such that if a test motorcycle continuously emitted formaldehyde at a rate equal to twenty percent of the maximum allowable level of THCE (i.e., 1.0 g/km for a 5.0 g/km standard), or the maximum formaldehyde level allowed by a specific formaldehyde standard, whichever is less, the concentration of formaldehyde in the DNPH solution of the primary impinger, or solution resulting from the extraction of the DNPH cartridge, shall exceed either 2.5 mg/l or a concentration equal to 25 times the limit of detection for the HPLC analyzer.

(iii) The methanol and formaldehyde systems shall be designed such that the primary impinger collects at least 90 percent of the analyte in the samples. The remaining analyte shall be collected by the secondary impinger. This requirement does not apply to dilution air samples, since they do not require secondary impingers, or to samples in which the concentrations approach the limit of detection.

(c) *Component description, CFV-CVS.* The CFV-CVS sample system, Figure F90–2, consists of a dilution air filter and mixing assembly, a cyclone particulate separator, unheated sampling venturies for the bag samples, and for the methanol and formaldehyde samples from methanol-fueled vehicles, samples lines heated to prevent condensation for the methanol and formaldehyde samples from methanol fueled vehicles (heating of the sample lines may be omitted provided, the methanol and formaldehyde sample collection systems are close coupled to the probes thereby preventing loss of sample due to cooling and resulting condensation in the sample lines), a critical flow venturi, and assorted valves, and pressure and temperature sensors. The CFV sample system shall conform to the following requirements:

(1) Static pressure variations at the tailpipe(s) of the vehicle shall remain within ±1.25 kPa (5.02 in H_2O) of the static pressure variations measured during a dynamometer driving cycle with no connection to the tailpipe(s). (Sampling systems capable of maintaining the static pressure to within ±0.25 kPa (1.00 in H_2O) will be used by the Administrator if a written request substantiates the need for this closer tolerance.)

(2) The temperature measuring system shall have an accuracy and precision of ±1 °C (1.8 °F) and a response time of 0.100 second to 62.5 percent of a temperature change (as measured in hot silicone oil).

(3) The pressure measuring system shall have an accuracy and precision of ±0.4 kPa (±3 mm Hg).

(4) The location of the dilution air inlet shall be placed so as to use test-cell air for dilution and the flow capacity of the CVS shall be large enough to completely eliminate water condensation in the dilution and sampling systems. Control of water condensation with methanol-fueled vehicles is critical. Additional care may also be required to eliminate water condensation when testing natural gas and liquefied petroleum gas-fueled vehicles. (Procedures for determining CVS flow rates are detailed in ''Calculation of Emissions and Fuel Economy When Using Alternative Fuels,'' EPA 460/3–83–009.) Dehumidifying the dilution air before entering the CVS is allowed. Heating the dilution air is also allowed, provided:

(i) The air (or air plus exhaust gas) temperature does not exceed 250 °F.

(ii) Calculation of the CVS flow rate necessary to prevent water condensation is based on the lowest temperature encountered in the CVS prior to sampling. (It is recommended that the CVS system be insulated when heated dilution air is used.)

(iii) The dilution ratio is sufficiently high to prevent condensation in bag samples as they cool to room temperature.

(5) Sample collection bags for dilution air and exhaust samples (hydrocarbons and carbon monoxide) shall be of sufficient size so as not to impede sample flow. A single dilution air sample, covering the total test period, may be collected for the determination of methanol and formaldehyde background (methanol-fueled motorcycles).

(6) The methanol sample collection system and the formaldehyde sample collection system shall each be of sufficient capacity so as to collect samples of adequate size for analysis without

significant impact on the volume of dilute exhaust passing through the CVS. The systems shall also comply with the following requirements that apply to the design of the systems, not to individual tests:

(i) The methanol system shall be designed such that if a test motorcycle continuously emitted the maximum allowable level of methanol (based on all applicable standards) the measured concentration in the primary impinger would exceed either 25 mg/l or a concentration equal to 25 times the limit of detection for the GC analyzer.

(ii) The formaldehyde system shall be designed such that if a test motorcycle continuously emitted formaldehyde at a rate equal to twenty percent of the maximum allowable level of THCE (i.e., 1.0 g/km for a 5.0 g/km standard), or the maximum formaldehyde level allowed by a specific formaldehyde standard, whichever is less, the concentration of formaldehyde in the DNPH solution of the primary impinger, or solution resulting from the extraction of the DNPH cartridge, shall exceed either 2.5 mg/l or a concentration equal to 25 times the limit of detection for the HPLC analyzer.

(iii) The methanol and formaldehyde systems shall be designed such that the primary impinger collects at least 90 percent of the analyte in the samples. The remaining analyte shall be collected by the secondary impinger. This requirement does not apply to dilution air samples, since they do not require secondary impingers, or to samples in which the concentrations approach the limit of detection.

(d) *Component description, CFV-EFC-CVS.* The CVS sample system is identical to the system described in paragraph (c) of this section, plus includes a means of electronically measuring the CVS flow rate, and electronic mass flow controllers for the methanol and formaldehyde sample lines, and separate flow meters to totalize sample flow volumes (optional). The EFC sample system shall conform to all of the requirements listed in paragraph (c) of this section, except that the methanol and formaldehyde samples mat both be drawn from a single static probe. It also must comply with the following additional requirements:

(1) The ratio of the CVS flow rate to the sample flow rate shall not deviate from the ratio at the start of the test by more than ±5 percent. (The volumetric sample flow rate shall be varied inversely with the square root of the bulk stream temperature.)

(2) Flow totalizers for methanol and/or formaldehyde samples shall have an accuracy of ±2 percent. Total sample volumes may be obtained from the flow controllers, with the advance approval of the administrator, provided that the controllers can be shown to have an accuracy of ±2 percent.

[54 FR 14539, Apr. 11, 1989, as amended at 59 FR 48512, Sept. 21, 1994; 60 FR 34351, June 30, 1995]

§ 86.511–90 Exhaust gas analytical system.

(a) *Schematic drawings.* Figure F90–3 is a schematic drawing of the exhaust gas analytical system for analysis of hydrocarbons (HC) (hydrocarbons plus methanol in the case of methanol-fueled motorcycles), carbon monoxide (CO), carbon dioxide (CO_2), and oxides of nitrogen (NO_X). Since various configurations can produce accurate results, exact conformance with the drawing is not required. Additional components such as instruments, valves, solenoids, pumps and switches may be used to provide additional information and coordinate the functions of the component systems

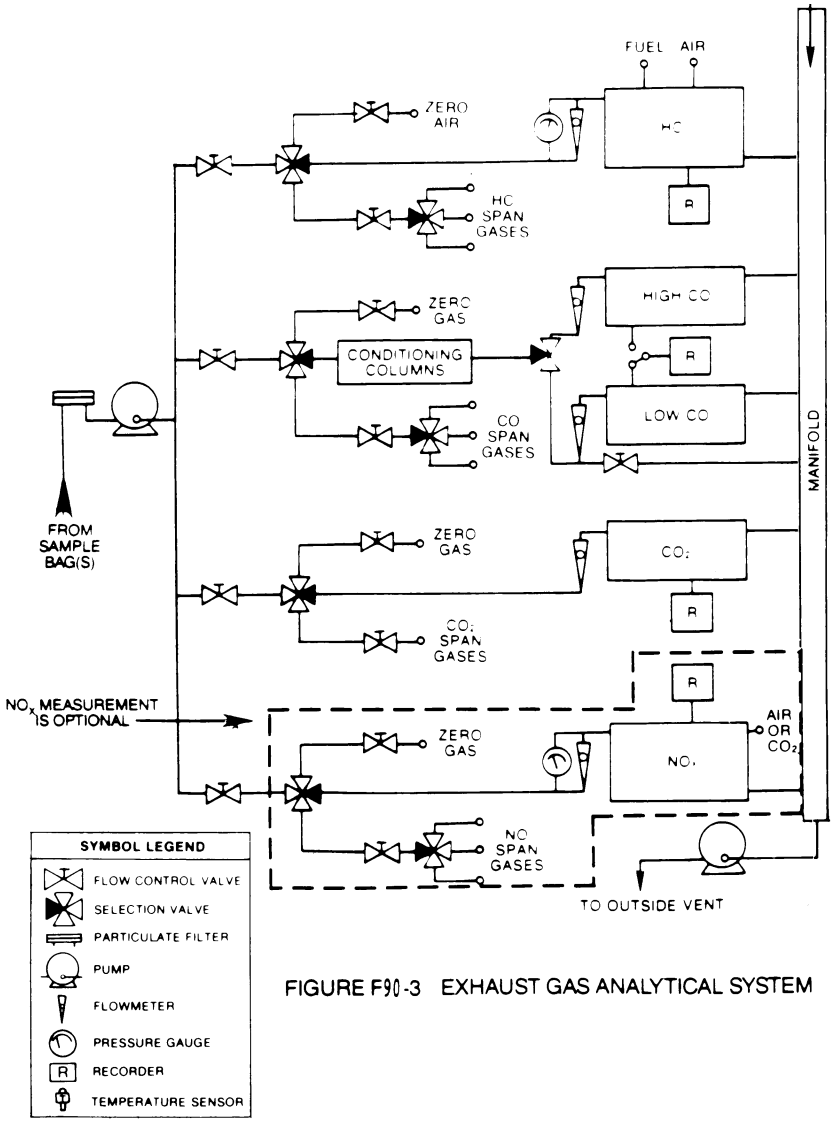

FIGURE F90-3 EXHAUST GAS ANALYTICAL SYSTEM

(b) *Major component description.* The exhaust gas analytical system for HC, CO and CO_2, Figure F90–3, consists of a flame ionization detector (FID) (heated (235°±15 °C (113°±8 °C)) for methanol-fueled vehicles) for the determination of hydrocarbons, nondispersive infrared analyzers (NDIR) for the determination of carbon monoxide and carbon dioxide and, if oxides of nitrogen are measured, a chemiluminescence analyzer (CL) for the determination of oxides of nitrogen. The analytical system for methanol consists of a gas chromatograph (GC) equipped with a flame ionization detector. The analysis for formaldehyde is performed using high pressure liquid chromatography (HPLC) of 2,4-

dinitrophenylhydrazine (DNPH) derivatives using ultraviolet (UV) detection. The exhaust gas analytical system shall conform to the following requirements:

(1) The CL requires that the nitrogen dioxide present in the sample be converted to nitric oxide before analysis. Other types of analyzers may be used if shown to yield equivalent results and if approved in advance by the Administrator.

(2) The carbon monoxide (CO) NDIR analyzer may require a sample conditioning column containing $CaSO_4$, or indicating silica gel to remove water vapor and containing ascarite to remove carbon dioxide from the CO analysis stream.

(i) If CO instruments which are essentially free of CO_2 and water vapor interference are used, the use of the conditioning column may be deleted, see §§ 86.522 and 86.544.

(ii) A CO instrument will be considered to be essentially free of CO_2 and water vapor interference if its response to a mixture of 3 percent CO_2 in N_2 which has been bubbled through water at room temperature produces an equivalent CO response, as measured on the most sensitive CO range, which is less than 1 percent of full scale CO concentration on ranges above 300 ppm full scale or less than 3 ppm on ranges below 300 ppm full scale; see § 86.522.

(c) *Other analyzers and equipment.* Other types of analyzers and equipment may be used if shown to yield equivalent results and if approved in advance by the Administrator.

[54 FR 14544, Apr. 11, 1989]

§ 86.513 Fuel and engine lubricant specifications.

(a) *Gasoline.* (1) Gasoline meeting the following specifications, or substantially equivalent specifications approved by the Administrator, must be used for exhaust and evaporative emission testing:

TABLE 1 OF § 86.513—GASOLINE TEST FUEL SPECIFICATIONS

Item	Value	Procedure [1]
Distillation Range:		
1. Initial boiling point, °C	23.9–35.0 [2]	ASTM D86
2. 10% point, °C	48.9–57.2.	
3. 50% point, °C	93.3–110.0.	
4. 90% point, °C	148.9–162.8.	
5. End point, °C	212.8 maximum.	
Hydrocarbon composition:		
1. Olefins, volume %	10 maximum	ASTM D1319
2. Aromatics, volume %	35 maximum.	
3. Saturates	Remainder.	
Lead (organic), g/liter	0.013 maximum	ASTM D3237
Phosphorous, g/liter	0.0013 maximum	ASTM D3231
Sulfur, weight %	0.008 maximum	ASTM D2622
Dry Vapor Pressure Equivalent (*DVPE*), kPa	55.2 to 63.4 [3]	ASTM D5191

[1] ASTM procedures are incorporated by reference in § 86.1.
[2] For testing at altitudes above 1,219 m, the specified initial boiling point range is (23.9 to 40.6) °C.
[3] For testing at altitudes above 1,219 m, the specified volatility range is 52 to 55 kPa. Calculate dry vapor pressure equivalent, *DVPE*, based on the measured total vapor pressure, p_T, using the following equation: *DVPE* (kPa) = $0.956 \cdot p_T - 2.39$ (or *DVPE* (psi) = $0.956 \cdot p_T - 0.347$). *DVPE* is intended to be equivalent to Reid Vapor Pressure using a different test method.

(2) The following specifications apply for fuels used during service accumulation for certification:

(i) Unleaded gasoline and engine lubricants representative of commercial fuels and engine lubricants which will be generally available through retail outlets shall be used in service accumulation.

(ii) The octane rating of the gasoline used shall be no higher than 4.0 Research octane numbers above the minimum recommended by the manufacturer.

(iii) The Reid Vapor Pressure of the gasoline used shall be characteristic of commercial gasoline fuel during the season in which the service accumulation takes place.

(b) *Methanol fuel.* (1) Methanol fuel used for exhaust and evaporative emission testing and in service accumulation of methanol-fueled motorcycles

shall be representative of commercially available methanol fuel and shall consist of at least 50 percent methanol by volume.

(2) Manufacturers shall recommend the methanol fuel to be used for testing and service accumulation in accordance with paragraph (b)(1) of this section.

(3) The Administrator shall determine the methanol fuel to be used for testing and service accumulation.

(4) Other methanol fuels may be used for testing and service accumulation provided:

(i) They are commercially available; and

(ii) Information, acceptable to the Administrator, is provided to show that only the designated fuel would be used in customer service; and

(iii) Use of a fuel listed under paragraphs (b)(1), (b)(2) or (b)(3) of this section would have a detrimental effect on emissions or durability; and

(iv) Written approval from the Administrator of the fuel specifications must be provided prior to the start of testing.

(c) *Mixtures of petroleum and methanol fuels for flexible fuel motorcycles.* (1) Mixtures of petroleum and methanol fuels used for exhaust and evaporative emission testing and service accumulation for flexible fuel motorcycles shall consist of the petroleum fuel listed in paragraph (a) of this section and the methanol fuel listed in paragraph (b), and shall be within the range of fuel mixtures for which the vehicle was designed, as reported in accordance with § 86.90–21. The Administrator may use any fuel or fuel mixture within this range for testing.

(2) The fuel mixtures used by the manufacturers shall be sufficient to demonstrate compliance over the full design range, and shall include:

(i) For emission testing,

(A) The petroleum fuel specified in paragraph (a) or (b),

(B) A methanol fuel representative of the methanol fuel expected to the found in use, as specified in paragraph (b),

(ii) For service accumulation, an alternating combination of the fuels specified in paragraphs (a) and (b) will be used to demonstrate the durability of the emission control systems based on good engineering judgement. The combination shall be selected such that the cumulative volumes of both the methanol fuel and the petroleum fuel used shall be at least twenty-five percent of the total fuel volume. The fuels shall be alternated at mileage intervals not to exceed 1,000 kilometers.

(3) The specification range of the fuels to be used under paragraph (c) of this section shall be reported in accordance with § 86.094–21.

(d) *Natural gas fuel.* (1) Natural gas meeting the following specifications, or substantially equivalent specifications approved by the Administrator, must be used for exhaust and evaporative emission testing:

TABLE 2 OF § 86.513—NATURAL GAS TEST FUEL SPECIFICATIONS

Item	Value [1]
Methane, CH_4	Minimum, 89.0 mole percent.
Ethane, C_2H_6	Maximum, 4.5 mole percent.
C_3 and higher	Maximum, 2.3 mole percent.
C_6 and higher	Maximum, 0.2 mole percent.
Oxygen	Maximum, 0.6 mole percent.
Inert gases (sum of CO_2 and N_2).	Maximum, 4.0 mole percent.

[1] All parameters are based on the reference procedures in ASTM D1945 (incorporated by reference in § 86.1).

(2) The natural gas at ambient conditions must have a distinctive odor potent enough for its presence to be detected down to a concentration in air of not over one-fifth of the lower limit of flammability.

(3) Natural gas fuel and engine lubricants representative of commercial fuels and engine lubricants generally available through retail outlets shall be used in service accumulation.

(4) A natural gas fuel meeting different specifications may be used for testing and service accumulation if all the following conditions are met:

(i) The alternate test fuel is commercially available.

(ii) Information, acceptable to the Administrator, is provided to show that only the designated fuel will be used in customer service.

(iii) The Administrator must provide advance written approval for the alternate test fuel.

(e) *Liquefied petroleum gas-fuel.* (1) Liquefied petroleum gas-fuel used for exhaust and evaporative emission testing and in service accumulation of liquefied petroleum gas-fueled motorcycles shall be commercially available liquefied petroleum gas-fuel.

(2) Manufacturers shall recommend the liquefied petroleum gas-fuel to be used for testing and service accumulation in accordance with paragraph (e)(1) of this section.

(3) The Administrator shall determine the liquefied petroleum gas-fuel to be used for testing and service accumulation.

(4) Other liquefied petroleum gas-fuels may be used for testing and service accumulation provided:

(i) They are commercially available;

(ii) Information, acceptable to the Administrator, is provided to show that only the designated fuel would be used in customer service; and

(iii) Written approval from the Administrator of the fuel specifications must be provided prior to the start of testing.

(f) *Lubricants.* (1) If the manufacturer specifies several lubricants to be used by the ultimate purchaser, the Administrator will select one to be used during service accumulation.

(2) The same lubricant(s) shall be used for both service accumulation and emission testing.

(g) The specification range of the fuels and of the engine lubricants to be used under paragraphs (a), (b), (c), (d) and (e) of this section shall be reported in accordance with § 86.416.

(h) Written approval from the Administrator of the fuel and lubricant specifications must be provided prior to the start of testing.

[59 FR 48512, Sept. 21, 1994, as amended at 60 FR 34354, June 30, 1995. Redesignated and amended at 79 FR 23699, Apr. 28, 2014; 80 FR 9103, Feb. 19, 2015]

§ 86.514–78 Analytical gases.

(a) *Analyzer gases.* (1) Gases for the CO and CO_2 analyzers shall be single blends of CO and CO_2 respectively using nitrogen as the diluent.

(2) Gases for the THC analyzer shall be:

(i) Single blends of propane using air as the diluent; and

(ii) Optionally, for response factor determination, single blends of methanol using air as the diluent.

(3) Gases for the NO_X analyzer shall be single blends of NO named as NO_X with a maximum NO_2 concentration of 5 percent of the nominal value using nitrogen as the diluent.

(4) [Reserved]

(5) The allowable zero gas (air or nitrogen) impurity concentrations shall not exceed 1 ppm equivalent carbon response, 1 ppm carbon monoxide, 0.04 percent (400 ppm) carbon dioxide, and 0.1 ppm nitric oxide.

(6) ''Zero grade air'' includes artificial ''air'' consisting of a blend of nitrogen and oxygen with oxygen concentrations between 18 and 21 mole percent.

(7) The use of proportioning and precision blending devices to obtain the required analyzer gas concentrations is allowable provided their use has been approved in advance by the Administrator.

(b) Calibration gases (not including methanol) shall be known to within 2 percent of true values.

(c) Methanol in air gases used for response factor determination shall:

(1) Be traceable to within ±2 percent of NIST (formerly NBS) gas standards, or other gas standards which have been approved by the Administrator; and

(2) Remain within ±2 percent of the labeled concentration. Demonstration of stability shall be based on a quarterly measurement procedure with a precision of ±2 percent (two standard deviations), or other method approved by the Administrator. The measurement procedure may incorporate multiple measurements. If the true concentration of the gas changes by more than two percent, but less than ten percent, the gas may be relabeled with the new concentration.

[42 FR 1137, Jan. 5, 1977, as amended at 60 FR 34354, June 30, 1995]

§ 86.515–78 EPA urban dynamometer driving schedule.

(a) The dynamometer driving schedules are listed in appendix I. The driving schedules are defined by a smooth trace drawn through the specified

speed vs. time relationships. They consist of a nonrepetitive series of idle, acceleration, cruise, and deceleration modes of various time sequences and rates. Appropriate driving schedules are as follows:

(1) Class I—Appendix I(b).

(2) Class II—Appendix I(a)(2).

(3) Class III—Appendix I(a)(2).

(b) The speed tolerance at any given time on the dynamometer driving schedule prescribed in appendix I or as printed on a driver's aid chart approved by the Administrator, when conducted to meet the requirements of § 86.537 is defined by upper and lower limits. The upper limit is 3.2 km/h (2 mph) higher than the highest point on the trace within 1 second of the given time. The lower limit is 3.2 km/h (2 mph) lower than the lowest point on the trace within 1 second of the given time. Speed variations greater than the tolerances (such as may occur during gear changes) are acceptable provided they occur for less than 2 seconds on any occasion. Speeds lower than those prescribed are acceptable provided the vehicle is operated at maximum available power during such occurrences. When conducted to meet the requirements of § 86.532 the speed tolerance shall be as specified above, except that the upper and lower limits shall be 6.4 km/h (4 mph).

(c) Figure F78–4 shows the range of acceptable speed tolerances for typical points. Figure F78–4(a) is typical of portions of the speed curve which are increasing or decreasing throughout the two second time interval. Figure F78–4(b) is typical of portions of the speed curve which include a maximum or minimum value.

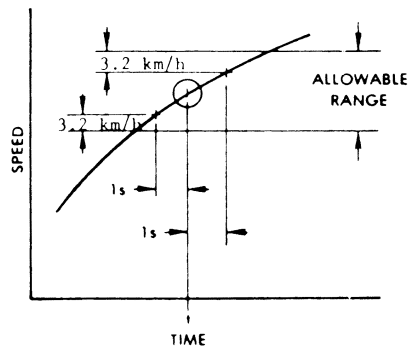

FIGURE F78-4a—DRIVERS TRACE, ALLOWABLE RANGE

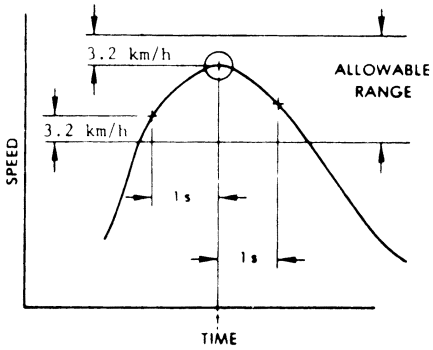

FIGURE F78-4b—DRIVERS TRACE, ALLOWABLE RANGE

(d) For motorcycles with an engine displacement less than 50 cc and a top speed less than 58.7 km/hr (36.5 mph), the speed indicated for each second of operation on the applicable Class I driving trace (speed versus time sequence) specified in appendix I(b) shall be adjusted downward by the ratio of actual top speed to specified maximum test speed. Calculate the ratio with three significant figures by dividing the top speed of the motorcycle in km/hr by 58.7. For example, for a motorcycle with a top speed of 48.3 km/hr (30 mph), the ratio would be 48.3/58.7 = 0.823. The top speed to be used under this section shall be indicated in the manufacturer's application for certification, and shall be the highest sustainable speed of the motorcycle with an 80 kg rider on a flat paved surface. If the motorcycle is equipped with a permanent speed governor that is unlikely to be removed in actual use, measure the top speed in the governed configuration; otherwise measure the

top speed in the ungoverned configuration.

[42 FR 1137, Jan. 5, 1977, as amended at 69 FR 2441, Jan. 15, 2004; 79 FR 23700, Apr. 28, 2014]

§ 86.516–90 Calibrations, frequency and overview.

(a) Calibrations shall be performed as specified in §§ 86.517 through 86.526.

(b) [Reserved]

(c) At least monthly or after any maintenance which could alter calibration, the following calibrations and checks shall be performed:

(1) Calibrate the hydrocarbon analyzer, methane analyzer, carbon dioxide analyzer, carbon monoxide analyzer, and oxides of nitrogen analyzer (certain analyzers may require more frequent calibration depending on particular equipment and uses).

(2) Calibrate the dynamometer. If the dynamometer receives a weekly performance check (and remains within calibration), the monthly calibration need not be performed.

(3) Check the oxides of nitrogen converter efficiency.

(d) At least weekly or after any maintenance which could alter calibration, the following calibrations and checks shall be performed:

(1) [Reserved]

(2) Perform a CVS system verification, and

(3) Run a performance check on the dynamometer. This check may be omitted if the dynamometer has been calibrated within the preceding month.

(e) The CVS positive displacement pump or Critical Flow Venturi shall be calibrated following initial installation, major maintenance or as necessary when indicated by the CVS system verification (described in § 86.519).

(f) Sample conditioning columns, if used in the CO analyzer train, should be checked at a frequency consistent with observed column life or when the indicator of the column packing begins to show deterioration.

[54 FR 14546, Apr. 11, 1989, as amended at 58 FR 58423, Nov. 1, 1993; 60 FR 34354, June 30, 1995]

§ 86.518–78 Dynamometer calibration.

(a) The dynamometer shall be calibrated at least once each month or performance verified at least once each week and then calibrated as required. The dynamometer is driven above the test speed range. The device used to drive the dynamometer is then disengaged from the dynamometer and the roll is allowed to coast down. The kinetic energy of the system is dissipated by the dynamometer. This method neglects the variations in roll bearing friction due to the drive axle weight of the vehicle.

(b) Calibration shall consist of coasting down the dynamometer for each inertia load combination used. Coastdown times for the interval from 70 to 60 km/h shall be within the tolerances specified in § 86.529. The dynamometer adjustments necessary to produce these results shall be noted for future reference.

(c) The performance check consists of conducting a dynamometer coastdown at one or more inertia-horsepower settings and comparing the coastdown time to the table in Figure F98–9 of § 86.529–98. If the coastdown time is outside the tolerance, a new calibration is required.

[42 FR 1137, Jan. 5, 1977, as amended at 63 FR 11849, Mar. 11, 1998]

§ 86.519–90 Constant volume sampler calibration.

(a) The CVS (Constant Volume Sampler) is calibrated using an accurate flowmeter and restrictor valve. Measurements of various parameters are made and related to flow through the unit. Procedures used by EPA for both PDP (Positive Displacement Pump) and CFV (Critical Flow Venturi) are outlined below. Other procedures yielding equivalent results may be used if approved in advance by the Administrator. After the calibration curve has been obtained, verification of the entire system can be performed by injecting a known mass of gas into the system and comparing the mass indicated by the system to the true mass injected. An indicated error does not necessarily mean that the calibration is wrong, since other factors can influence the accuracy of the system, e.g., analyzer calibration. A verification procedure is found in paragraph (d) of this section.

(b) *PDP calibration.* (1) The following calibration procedures outlines the

equipment, the test configuration, and the various parameters which must be measured to establish the flow rate of the constant volume sampler pump. All the parameters related to the pump are simultaneously measured with the parameters related to a flowmeter which is connected in series with the pump. The calculated flow rate (at pump inlet absolute pressure and temperature) can then be plotted versus a correlation function which is the value of a specific combination of pump parameters. The linear equation which relates the pump flow and the correlation function is then determined. In the event that a CVS has a multiple speed drive, a calibration for each range must be performed.

(2) This calibration procedure is based on the measurement of the absolute values of the pump and flowmeter parameters that relate the flow rate at each point. Three conditions must be maintained to assure the accuracy and integrity of the calibration curve. First, the pump pressures should be measured at taps on the pump rather than at the external piping on the pump inlet and outlet. Pressure taps that are mounted at the top center and bottom center of the pump drive headplate are exposed to the actual pump cavity pressures, and therefore reflect the absolute pressure differentials. Secondly, temperature stability must be maintained during the calibration. The laminar flowmeter is sensitive to inlet temperature oscillations which cause the data points to be scattered. Gradual changes (±1 °C (±1.8 °F)) in temperature are acceptable as long as they occur over a period of several minutes. Finally, all connections between the flowmeter and the CVS pump must be absolutely void of any leakage.

(3) During an exhaust emission test the measurement of these same pump parameters enables the user to calculate the flow rate from the calibration equation.

(4) Connect a system as shown in Figure F78–5. Although particular types of equipment are shown, other configurations that yield equivalent results may be used if approved in advance by the Administrator. For the system indicated, the following data with given accuracy are required:

CALIBRATION DATA MEASUREMENTS

Parameter	Symbol	Units	Tolerances
Barometric pressure corrected	P_B	kPa (in. Hg)	±0.03 kPa (±0.01 in. Hg)
Ambient temperature	T_A	°C (°F)	±0.3 °C (±0.54 °F)
Air Temperature into LFE	ETI	°C (°F)	±0.15 °C (±0.27 °F)
Pressure depression upstream of LFE	EPI	kPa (in. H_2O)	±0.01 kPa (±0.05 in. H_2O)
Pressure drop across the LFE matrix	EDP	kPa (in. H_2O)	±0.001 kPa (±0.005 in. H_2O)
Air temperature at CVS pump inlet	PTI	°C (°F)	±0.25 °C (±0.45 °F)
Pressure depression at CVS pump inlet	PPI	kPa (in. Fluid)	±0.021 kPa (±0.046 in. Fluid)
Specific gravity of manometer fluid (1.75 oil).	Sp Gr		
Pressure head at CVS pump outlet	PPO	kPa (in. Fluid)	±0.21 kPa (±0.046 in. Fluid)
Air temperature at CVS pump outlet (optional)	PTO	°C (°F)	±0.25 °C (±0.45 °F)
Pump revolutions during test period	N	Revs	±I Rev.
Elapsed time for test period	t	sec.	±0.05 sec.

(5) After the system has been connected as shown in Figure F78–6, set the variable restrictor in the wide open position and run the CVS pump for twenty minutes. Record the calibration data.

(6) Reset the restrictor valve to a more restricted condition in an increment of pump inlet depression (about 1.0 kPa (4 in. H_2O)) that will yield a minimum of six data points for the total calibration. Allow the system to stabilize for 3 minutes and repeat the data acquisition.

(7) Data analysis:

(i) The air flow rate, Q_s, at each test point is calculated from the flowmeter data using the manufacturers' prescribed method.

(ii) The air flow rate is then converted to pump flow, V_o in m^3 per revolution at absolute pump inlet temperature and pressure.

$$V_o = (Q_s/n) \times (T_p/293) \times (101.3/P_p)$$

Where:

(A) V_o = Pump flow, m^3/rev (ft^3/rev) at T_p, P_p.

(B) Q_s = Meter air flow rate in standard cubic meters per minute; standard conditions are 20 °C, 101.3 kPa (68 °F, 29.92 in. Hg).

(C) n = Pump speed in revolutions per minute.

(D)(*1*) T_p = Pump inlet temperature, (°K) = PTI + 273.

(*2*) *For English units*, T_p = PTI + 460.

(E)(*1*) P_p = Absolute pump inlet pressure, kPa (in. Hg) = P_B − PPI.

(*2*) *For English units*, P_p = P_B − PPI(SP.GR./13.57).

Where:

(F) P_B = barometric pressure, kPa (in. Hg.).

(G) PPI = Pump inlet depression, kPa (in. fluid).

(H) SP.GR. = Specific gravity of manometer fluid relative to water.

(iii) The correlation function at each test point is then calculated from the calibration data:

$$X_o = \frac{1}{n}\sqrt{\frac{\Delta P_p}{P_e}}$$

Where:

(A) X_o = correlation function.

(B) ΔP_p = The pressure differential from pump inlet to pump outlet, kPa (in. Hg) = $P_e - P_p$.

(C)(*1*) P_e = Absolute pump outlet pressure, kPa (in. Hg) = P_B + PPO.

(*2*) *For English units*, P_e = P_B + PPO(SP.GR./13.57).

Where:

(D) PPO = Pressure head at pump outlet, kPa (in. fluid).

(iv) A linear least squares fit is performed to generate the calibration equations which have the forms:

$V_o = D_o - M(X_o)$

$n = A - B(\Delta P_p)$

D_0' M, A, and B are the slope-intercept constants, describing the lines.

(8) A CVS system that has multiple speeds shall be calibrated on each speed used. The calibration curves generated for the ranges will be approximately parallel and the intercept values, D_0' will increase as the pump flow range decreases.

(9) If the calibration has been performed carefully, the calculated values from the equation will be within ±0.50 percent of the measured value of V_o. Values of M will vary from one pump to another, but values of D_o for pumps of the same make, model, and range should agree within ±3 percent of each other. Particulate influx from use will cause the pump slip to decrease as reflected by lower values for M. Calibrations should be performed at pump startup and after major maintenance to assure the stability of the pump slip rate. Analysis of mass injection data will also reflect pump slip stability.

(c) *CFV calibration*. (1) Calibration of the Critical Flow Venturi (CFV) is based upon the flow equation for a critical venturi. Gas flow is a function of inlet pressure and temperature:

$$Q_s = \frac{K_v P}{\sqrt{T}}$$

Where:

(i) Q_s = Flow.

(ii) K_v = Calibration coefficient.

(iii) P = Absolute pressure.

(iv) T = Absolute temperature.

The calibration procedure described below establishes the value of the calibration coefficient at the measured values of pressure, temperature and air flow.

(2) The manufacturer's recommended procedure shall be followed for calibrating electronic portions of the CFV.

(3) Measurements necessary for flow calibration are as follows:

CALIBRATION DATA MEASUREMENTS

Parameter	Symbol	Units	Tolerances
Barometric pressure (corrected)	P_B	kPa (in. Hg)	±0.03 kPa (±0.01 in. Hg)
Air temperature, flowmeter	ETI	°C (°F)	±0.15 °C (±0.27 °F)
Pressure depression upstream of LFE	EPI	kPa (in. H_2O)	±0.01kPa (±0.05 in. H_2O)
Pressure drop across LFE matrix	EDP	kPa (in. H_2O)	±0.001 kPa (±0.005 in. H_2O)
Air flow	Q_s	m^3/min (ft^3/min)	±0.5%
CFV inlet depression	PPI	kPa (in. fluid)	±0.02 kPa (±0.05 in. fluid)
Temperature at venturi inlet	T_v	°C (°F)	±0.25 °C (±0.45 °F)

CALIBRATION DATA MEASUREMENTS—Continued

Parameter	Symbol	Units	Tolerances
Specific gravity of manometer fluid (1.75 oil)	Sp Gr	. . . .	. . .

(4) Set up equipment as shown in Figure F78–6 and check for leaks. Any leaks between the flow measuring device and the critical flow venturi will seriously affect the accuracy of the calibration.

(5) Set the variable flow restrictor to the open position, start the blower and allow the system to stabilize. Record data from all instruments.

(6) Vary the flow restrictor and make at least 8 readings across the critical flow range of the venturi.

(7) *Data analysis*. The data recorded during the calibration are to be used in the following calculations:

(i) The air flow rate, Q_s, at each test point is calculated from the flowmeter data using the manufacturer's prescribed method.

(ii) Calculate values of the calibration coefficient for each test point:

$$K_v = \frac{Q_s \sqrt{T_v}}{P_v}$$

Where:

(A) Q_s = Flow rate in m³/minute, standard conditions are 20 °C, 101.3 kPa (68 °F, 29.92 in. Hg)

(B) T_v = Temperature at venturi inlet, °K(°R).

(C)(*1*) P_v = Pressure at venturi inlet, kPa (mm Hg) = P_B–PPI.

(*2*) *For English units*, P_v = P_B – PPI (SP.GR./13.57).

Where:

(D) PPI = Venturi inlet pressure depression, kPa (in. fluid).

(E) SP.GR. = Specific gravity of manometer fluid, relative to water.

(iii) Plot K_v as a function of venturi inlet depression. For sonic flow, K_v will have a relatively constant value. As pressure decreases (vacuum increases), the venturi becomes unchoked and K_v decreases (is no longer constant). See Figure F78–7.

(iv) For a minimum of 8 points in the critical region, calculate an average K_v and the standard deviation.

(v) If the standard deviation exceeds 0.3 percent of the average K_v, take corrective action.

(d) *CVS system verification*. The following ''gravimetric'' technique can be used to verify that the CVS and analytical instruments can accurately measure a mass of gas that has been injected into the system. If the CVS and analytical system will be used only in the testing of gasoline-fueled vehicles, the system verification may be performed using either propane or carbon monoxide. If the CVS and analytical system will be used with methanol-fueled vehicles as well as gasoline-fueled vehicles, system verification performance check must include a methanol check in addition to either the propane or carbon monoxide check. (Verification can also be accomplished by constant flow metering using critical flow orifice devices.)

(1) Obtain a small cylinder that has been charged with pure propane or carbon monoxide gas (CAUTION—carbon monoxide is poisonous).

(2) Determine a reference cylinder weight to the nearest 0.01 grams.

(3) Operate the CVS in the normal manner and release a quantity of pure propane or carbon monoxide into the system during the sampling period (approximately 5 minutes).

(4) Following completion of step (3) above (if methanol injection is required), continue to operate the CVS in the normal manner and release a known quantity of pure methanol (in gaseous form) into the system during the sampling period (approximately 5 minutes). This step does not need to be performed with each verification, provided that it is performed at least twice annually.

(5) The calculations of § 86.544 are performed in the normal way except in the case of propane. The density of propane (0.6109 kg/m³/carbon atom (17.30 g/ft³/carbon atom)) is used in place of the density of exhaust hydrocarbons. In the case of carbon monoxide, the density of 1.164 kg/m³ (32.97 g/ft³) is used.

In the case of methanol, the density of 1.332 kg/m³ (37.71 g/ft³) is used.

(6) The gravimetric mass is subtracted from the CVS measured mass and then divided by the gravimetric mass to determine the percent accuracy of the system.

(7) The cause for any discrepancy greater than ±2 percent must be found and corrected. The Administrator, upon request, may waive the requirement to comply with ±2 percent methanol recovery tolerance, and instead require compliance with a higher tolerance (not to exceed ±6 percent), provided that:

(i) The Administrator determines that compliance with the specified tolerance is not practically feasible; and

(ii) The manufacturer makes information available to the Administrator which indicates that the calibration tests and their results are consistent with good laboratory practice, and that the results are consistent with the results of calibration testing conducted by the Administrator.

[54 FR 14546, Apr. 11, 1989, as amended at 60 FR 34355, June 30, 1995]

§ 86.521–90 Hydrocarbon analyzer calibration.

(a) The FID hydrocarbon analyzer shall receive the following initial and periodic calibration. The HFID used with methanol-fueled vehicles shall be operated at 235 °F±15 °F (113 °C±8 °C).

(b) *Initial and periodic optimization of detector response.* Prior to its introduction into service and at least annually thereafter, the FID hydrocarbon analyzer shall be adjusted for optimum hydrocarbon response. Analyzers used with petroleum fuels and liquefied petroleum gas-fuel shall be optimized using propane. Analyzers used with natural gas-fuel for measurement of hydrocarbons shall be optimized using methane. If a single analyzer is used for all measurements, it shall be optimized using propane and its response factor for methane shall be determined and accounted for in measurements of total hydrocarbons from natural gas-fuel. Alternate methods yielding equivalent results may be used, if approved in advance by the Administrator.

(1) Follow the manufacturer's instructions or good engineering practice for instrument startup and basic operating adjustment using the appropriate FID fuel and zero-grade air.

(2) Optimize on the most common operating range. Introduce into the analyzer a propane (methane as appropriate) in air mixture (methanol in air mixture for methanol-fueled vehicles when optional methanol calibrated FID procedure is used during the 1990 through 1994 model year) with a propane (or methane or methanol as appropriate) concentration equal to approximately 90 percent of the most common operating range.

(3) Select an operating FID fuel flow rate that will give near maximum response and least variation in response with minor fuel flow variations.

(4) To determine the optimum air flow, use the FID fuel flow setting determined above and vary air flow.

(5) After the optimum flow rates have been determined, record them for future reference.

(c) *Initial and periodic calibration.* Prior to its introduction into service and monthly thereafter the FID hydrocarbon analyzer shall be calibrated on all normally used instrument ranges, and, if applicable, the methanol response factor shall be determined (paragraph (d) of this section). Use the same flow rate as when analyzing sample.

(1) Adjust analyzer to optimize performance.

(2) Zero the hydrocarbon analyzer with zero grade air.

(3) Calibrate on each normally used operating range with propane in air (or methanol or methane in air as appropriate) calibration gases having nominal concentrations of 15, 30, 45, 60, 75 and 90 percent of that range. For each range calibrated, if the deviation from a least squares best-fit straight line is two percent or less of the value at each data point, concentration values may be calculated by use of a single calibration factor for that range. If the deviation exceeds two percent at any point, the best-fit non-linear equation which represents the data to within two percent of each test point shall be used to determine concentration.

(d) *FID response factor to methanol.* When the FID analyzer is to be used for the analysis of hydrocarbon samples

containing methanol, the methanol response factor of the analyzer shall be established. The methanol response factor shall be determined at several concentrations in the range of concentrations in the exhaust sample, using either bag samples or gas bottles meeting the requirements of § 86.514.

(1) The bag sample, if used, of methanol for analysis in the FID shall be prepared using the apparatus shown in Figure F90–4. A known volume of methanol is injected, using a microliter syringe, into the heated mixing zone (250 °F (121 °C)) of the apparatus. The methanol is vaporized and swept into the sample bag with a known volume of zero grade air measured by a gas flow meter meeting the performance requirements of § 86.120.

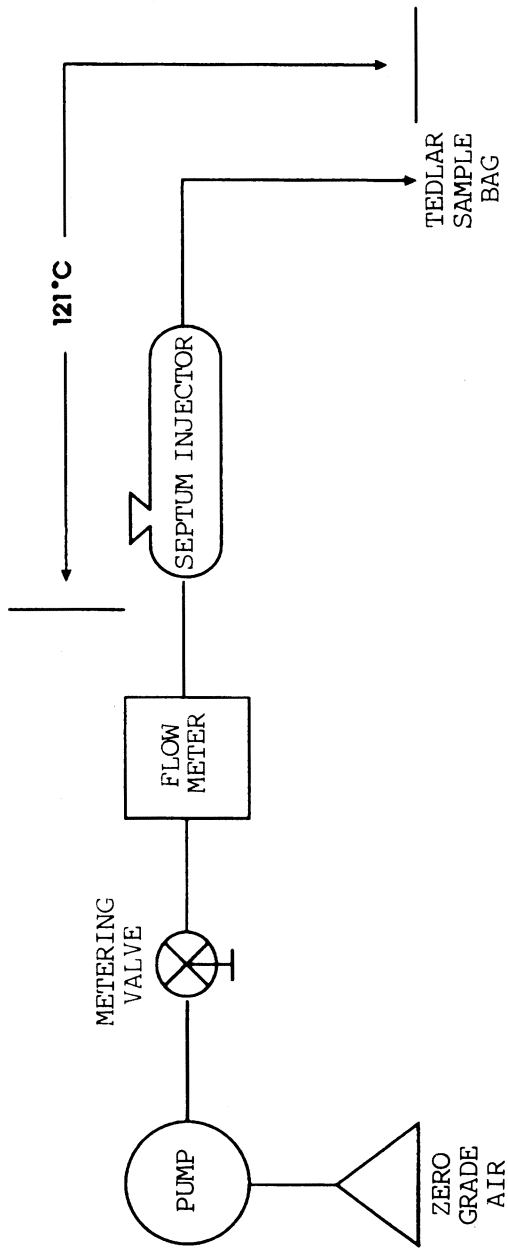

FIGURE F90-4 APPARATUS FOR PREPARATION OF FID METHANOL RESPONSE CALIBRATION MIX

(2) The bag sample is analyzed using the FID.

(3) The FID response factor, r, is calculated as follows:

$$r = FID_{ppm}/SAM_{ppm}$$

Where:

(i) r = FID response factor.

(ii) FID_{ppm} = FID reading, ppmC.

(iii) SAMppm = methanol concentration in the sample bag, or gas bottle, in ppmC. SAMppm for sample bags:

$$= \frac{0.02406 \times \text{Fuel injected} \times \text{Fuel density}}{\text{Air volume} \times \text{Mol. Wt. } CH_3OH}$$

Where:

(iv) 0.02406 = Volume of one mole at 101.3 kPa (29.92 in. Hg) and 20 °C (68 °F), m^3.

(v) Fuel injected = Volume of methanol injected, ml.

(vi) Fuel Density = Density of methanol, 0.7914 g/ml

(vii) Air volume = Volume of zero grade air, m^3

(viii) Mol. Wt. CH_3OH = 32.04

(e) *FID response factor to methane.* When the FID analyzer is to be used for the analysis of natural gas-fueled motorcycle hydrocarbon samples, the methane response factor of the analyzer shall be established. To determine the total hydrocarbon FID response to methane, known methane in air concentrations traceable to National Institute of Standards and Technology (NIST) shall be analyzed by the FID. Several methane concentrations shall be analyzed by the FID in the range of concentrations in the exhaust sample. The total hydrocarbon FID response to methane is calculated as follows:

r_{CH4} = FIDppm/SAMppm

Where:

(1) r_{CH4} = FID response factor to methane.

(2) FIDppm = FID reading in ppmC.

(3) SAMppm = the known methane concentration in ppmC.

[54 FR 14546, Apr. 11, 1989, as amended at 59 FR 48514, Sept. 21, 1994; 60 FR 34355, June 30, 1995]

§ 86.522–78 Carbon monoxide analyzer calibration.

(a) *Initial and periodic interference check.* Prior to its introduction into service and annually thereafter the NDIR carbon monoxide analyzer shall be checked for response to water vapor and CO_2.

(1) Follow the manufacturer's instructions for instrument startup and operation. Adjust the analyzer to optimize performance on the most sensitive range.

(2) Zero the carbon monoxide analyzer with either zero grade air or zero grade nitrogen.

(3) Bubble a mixture of 3 percent CO_2 in N_2 through water at room temperature and record analyzer response.

(4) An analyzer response of more than 1 percent of full scale for ranges above 300 ppm full scale or of more than 3 ppm on ranges below 300 ppm full scale will require corrective action. (Use of conditioning columns is one form of corrective action which may be taken.)

(b) *Initial and periodic calibration.* Prior to its introduction into service and monthly thereafter the NDIR carbon monoxide analyzer shall be calibrated.

(1) Adjust the analyzer to optimize performance.

(2) Zero the carbon monoxide analyzer with either zero grade air or zero grade nitrogen.

(3) Calibrate on each normally used operating range with carbon monoxide in N_2 calibration gases having nominal concentrations of 15, 30, 45, 60, 75, and 90 percent of that range. Additional calibration points may be generated. For each range calibrated, if the deviation from a least-squares best-fit straight line is 2 percent or less of the value at each data point, concentration values may be calculated by use of a single calibration factor for that range. If the deviation exceeds 2 percent at any point, the best-fit non-linear equation which represents the data to within 2 percent of each test point shall be used to determine concentration.

§ 86.523–78 Oxides of nitrogen analyzer calibration.

(a) Prior to introduction into service and at least monthly thereafter, if oxides of nitrogen are measured, the chemiluminescent oxides of nitrogen analyzer must be checked for NO_2 to NO converter efficiency. Figure F78–8 is a reference for paragraphs (a) (1) through (11) of this section.

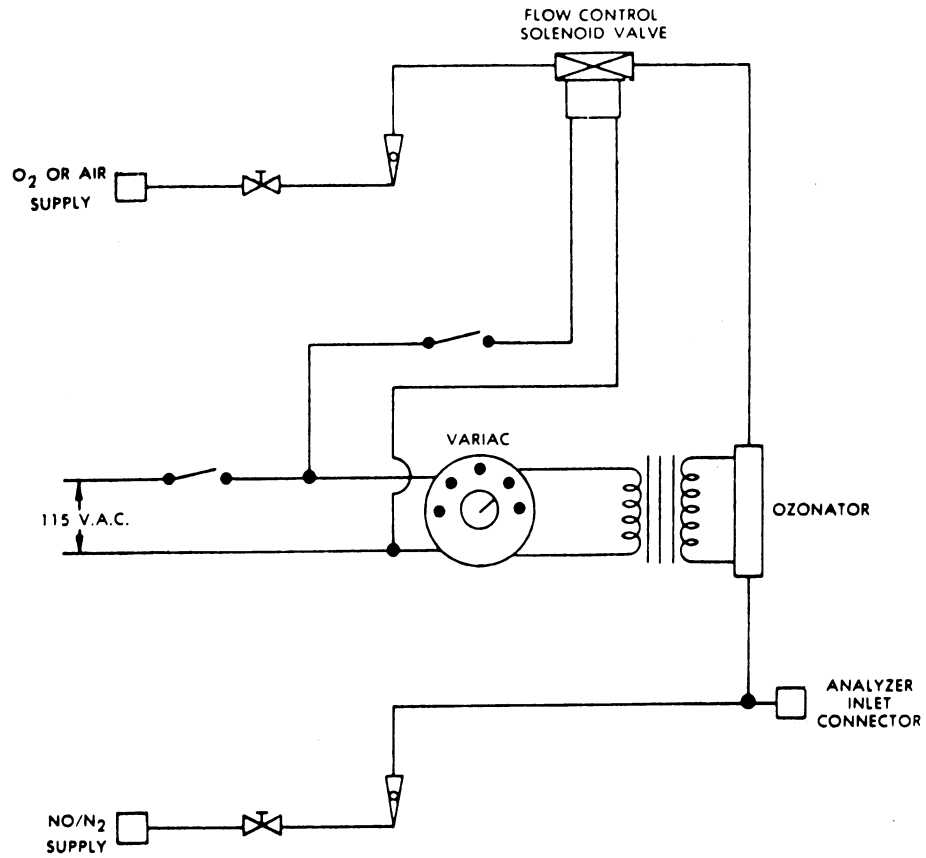

(SEE FIG F78–3 FOR SYMBOL LEGEND)
FIGURE F78–8—NOx CONVERTER EFFICIENCY DETECTOR

(1) Follow the manufacturer's instructions for instrument startup and operation. Adjust the analyzer to optimize performance.

(2) Zero the oxides of nitrogen analyzer with zero grade air or zero grade nitrogen.

(3) Connect the outlet of the NO_X generator to the sample inlet of the oxides of nitrogen analyzer which has been set to the most common operating range.

(4) Introduce into the NO_X generator analyzer-system a NO in nitrogen (N_2) mixture with a NO concentration equal to approximately 80 percent of the most common operating range. The NO_2 content of the gas mixture shall be less than 5 percent of the NO concentration.

(5) With the oxides of nitrogen analyzer in the NO mode, record the concentration of NO indicated by the analyzer.

(6) Turn on the NO_X generator O_2 (or air) supply and adjust the O_2 (or air) flow rate so that the NO indicated by the analyzer is about 10 percent less than indicated in step 5. Record the concentration of NO in this NO + O_2 mixture.

(7) Switch the NO_X generator to the generation mode and adjust the generation rate so that the NO measured on

the analyzer is 20 percent of that measured in step 5. There must be at least 10 percent unreacted NO at this point. Record the concentration of residual NO.

(8) Switch the oxides of nitrogen analyzer to the NO_X mode and measure total NO_X. Record this value.

(9) Switch off the NO_X generation but maintain gas flow through the system. The oxides of nitrogen analyzer will indicate the NO_X in the NO + O_2 mixture. Record this value.

(10) Turn off the NO_X generator O_2 (or air) supply. The analyzer will now indicate the NO_X in the original NO in N_2 mixture. This value should be no more than 5 percent above the value indicated in step 4.

(11) Calculate the efficiency of the NO_X converter by substituting the concentrations obtained into the following equation:

$$\text{Percent Efficiency} = [1 + (a - b)/(c - d)] \times 100$$

where:

a = concentration obtained in step (8).
b = concentration obtained in step (9).
c = concentration obtained in step (6).
d = concentration obtained in step (7).

If converter efficiency is not greater than 90 percent corrective action will be required.

(b) *Initial and periodic calibration.* Prior to its introduction into service and monthly thereafter, if oxides of nitrogen are measured, the chemiluminescent oxides of nitrogen analyzer shall be calibrated on all normally used instrument ranges. Use the same flow rate as when analyzing samples. Proceed as follows:

(1) Adjust analyzer to optimize performance.

(2) Zero the oxides of nitrogen analyzer with zero grade air or zero grade nitrogen.

(3) Calibrate on each normally used operating range with NO in N_2 calibration gases with nominal concentrations of 50 and 100 percent of that range. Additional calibration points may be generated.

(c) When testing methanol-fueled motorcycles, it may be necessary to clean the analyzer frequently to prevent interference with NO_X measurements (see EPA/600/S3–88/040).

[42 FR 1137, Jan. 5, 1977, as amended at 52 FR 47870, Dec. 16, 1987; 58 FR 58423, Nov. 1, 1993; 60 FR 34357, June 30, 1995]

§ 86.524–78 Carbon dioxide analyzer calibration.

(a) Prior to its introduction into service and monthly thereafter the NDIR carbon dioxide analyzer shall be calibrated:

(1) Follow the manufacturer's instructions for instrument startup and operation. Adjust the analyzer to optimize performance.

(2) Zero the carbon dioxide analyzer with either zero grade air or zero grade nitrogen.

(3) Calibrate on each normally used operating range with carbon dioxide in N_2 calibration gases with nominal concentrations of 15, 30, 45, 60, 75, and 90 percent of that range. Additional calibration points may be generated. For each range calibrated, if the deviation from a least-squares best-fit straight line is 2 percent or less of the value at each data point, concentration values may be calculated by use of a single calibration factor for that range. If the deviation exceeds 2 percent at any point, the best-fit non-linear equation which represents the data to within 2 percent of each test point shall be used to determine concentration.

(b) [Reserved]

§ 86.526–90 Calibration of other equipment.

Other test equipment used for testing shall be calibrated as often as required by the manufacturer or as necessary according to good practice. Specific equipment requiring calibration is the gas chromatograph and flame ionization detector used in measuring methanol and the high pressure liquid chromatograph (HPLC) and ultraviolet detector for measuring formaldehyde.

[54 FR 14551, Apr. 11, 1989]

§ 86.527–90 Test procedures, overview.

(a) The procedures described in this and subsequent sections are used to determine the conformity of motorcycles with the standards set forth in subpart E of this part.

(b) The overall test consists of prescribed sequences of fueling, parking, and operating conditions.

(c) The exhaust emission test is designed to determine hydrocarbon (gasoline-fueled, natural gas-fueled and liquefied petroleum gas-fueled motorcycles), methanol, formaldehyde, and hydrocarbon (methanol-fueled motorcycles), carbon monoxide and oxides of nitrogen mass emissions while simulating an average trip in an urban area. The test consists of engine startups and motorcycle operation on a chassis dynamometer, through a specified driving schedule. A proportional part of the diluted exhaust emissions is collected continuously for subsequent analysis, using a constant volume (variable dilution) sampler.

(d) Except in cases of component malfunction or failure, all emission control systems installed on or incorporated in a new motorcycle shall be functioning during all procedures in this subpart. Maintenance to correct component malfunction or failure shall be authorized in accordance with subpart E of this part.

(e) Background concentrations are measured for all species for which emissions measurements are made. For exhaust testing, this requires sampling and analysis of the dilution air. (When testing methanol-fueled motorcycles, manufacturers may choose not to measure background concentrations of methanol and/or formaldehyde, and then assume that the concentrations are zero during calculations.)

[54 FR 14551, Apr. 11, 1989, as amended at 59 FR 48515, Sept. 21, 1994; 60 FR 34357, June 30, 1995]

§ 86.528–78 Transmissions.

(a) Vehicles equipped with transfer cases, multiple sprockets, etc., shall be tested in the manufacturer's recommended configuration for street or highway use. If more than one configuration is recommended or if the recommendation is deemed unreasonable by the Administrator, the Administrator will specify the test configuration.

(b) All tests shall be conducted with automatic transmissions in ''Drive'' (highest gear). Automatic clutch-torque converter transmissions may be shifted as manual transmissions at the option of the manufacturer.

(c) Idle modes shall be run with automatic transmissions in ''Drive'' and the wheels braked, manual transmission shall be in gear with the clutch disengaged; except first idle, see §§ 86.536 and 86.537.

(d) The vehicle shall be driven with minimum throttle movement to maintain the desired speed. No simultaneous use of brake and throttle shall be permitted.

(e) Acceleration modes shall be driven smoothly. Automatic transmissions shall shift automatically through the normal sequence of gears; manual transmissions shall be shifted as recommended by the manufacturer to the ultimate purchaser (unless determined to be unreasonable by the Administrator) with the operator closing the throttle during each shift and accomplishing the shift with minimum time. If the vehicle cannot accelerate at the specified rate, the vehicle shall be operated with the throttle fully opened until the vehicle speed reaches the value prescribed for that time in the driving schedule.

(f) The deceleration modes shall be run in gear using brakes or throttle as necessary to maintain the desired speed. Manual transmission vehicles shall be downshifted using the same shift points as when upshifting or as recommended by the manufacturer in the vehicle owner's manual. All downshifts shall be made smoothly, disengaging the clutch while shifting and engaging the clutch once the lower gear has been selected. For those modes which require the vehicle to decelerate to zero, manual transmission clutches shall be disengaged when the speed drops below 15 km/h (9.3 mph) for vehicles with engine displacements equal to or greater than 280 cc (17.1 cu. in.), when the speed drops below 10 km/h (6.2 mph) for vehicles with engine displacements less than 280 cc (17.1 cu. in.), when engine roughness is evident, or when engine stalling is imminent.

(g) If downshifting during deceleration is not permitted in the vehicle owner's manual, manual transmissions will be downshifted at the beginning of or during a power mode if recommended by the manufacturer or if

the engine obviously is lugging. For those modes which require these vehicles to decelerate to zero, manual transmission clutches shall be disengaged when the speed drops below 25 km/h (15.5 mph) for vehicles with engine displacement equal to or greater than 280 cc (17.1 cu. in.), when the speed drops below 20 km/h (12.4 mph) for vehicles with engine displacements less than 280 cc (17.1 cu. in.), when engine roughness is evident, or when engine stalling is imminent. While the clutch is disengaged and during these deceleration modes, the vehicle shall be shifted to the appropriate gear for starting the next mode.

(h) If shift speeds are not recommended by the manufacturer, manual transmission vehicles shall be shifted as follows:

(1) For Class I and II motorcycles:

Shift	Speed
1st to 2d gear	19 km/h (11.8 mi/h).
2d to 3d gear	33 km/h (20.5 mi/h).
3d to 4th gear	44 km/h (27.3 mi/h).
4th to 5th gear	53 km/h (32.9 mi/h).

(2) For Class III motorcycles:

Shift	Speed
1st to 2d gear	30 km/h (18.6 mi/h).
2d to 3d gear	45 km/h (28.0 mi/h).
3d to 4th gear	60 km/h (37.3 mi/h).
4th to 5th gear	75 km/h (46.6 mi/h).

(3) Higher gears may be used at the manufacturer's option.

§ 86.529–98 Road load force and inertia weight determination.

(a)(1) Road load as a function of speed is given by the following equation:

$$F = A + CV^2$$

(2) The values for coefficients A and C and the test inertia are given in Figure F98–9 of this section. Velocity V is in km/h and force (F) is in newtons. The forces given by the equation in paragraph (a)(1) of this section shall be simulated to the best ability of the equipment being used.

(b) The inertia given in Figure F98–9 shall be used. Motorcycles with loaded vehicle mass outside these limits shall be tested at an equivalent inertial mass and road load force specified by the Administrator. Figure F98–9 follows:

FIGURE F98–9

Loaded vehicle mass (kg)	Equivalent inertial mass (kg)	Force coefficients		Force at 65 km/h (nt)	70 to 60 km/h coastdown calibration times		
		A (nt)	C (nt/(km/h)^2)		Target time (sec)	Allowable tolerance	
						Longest time (sec)	Shortest time (sec)
95–105	100	0.0	.0224	94.8	2.95	3.1	2.8
106–115	110	0.82	.0227	96.8	3.18	3.3	3.0
116–125	120	1.70	.0230	98.8	3.39	3.6	3.2
126–135	130	2.57	.0233	100.9	3.60	3.8	3.4
136–145	140	3.44	.0235	102.9	3.80	4.0	3.6
146–155	150	4.32	.0238	104.9	3.99	4.2	3.8
156–165	160	5.19	.0241	107.0	4.10	4.4	4.0
166–175	170	6.06	.0244	109.0	4.36	4.6	4.2
176–185	180	6.94	.0246	111.0	4.53	4.7	4.3
186–195	190	7.81	.0249	113.1	4.69	4.9	4.5
196–205	200	8.69	.0252	115.1	4.85	5.1	4.6
206–215	210	9.56	.0255	117.1	5.00	5.2	4.8
216–225	220	10.43	.0257	119.2	5.15	5.4	4.9
226–235	230	11.31	.0260	121.2	5.30	5.5	5.1
236–245	240	12.18	.0263	123.2	5.43	5.7	5.2
246–255	250	13.06	.0266	125.3	5.57	5.8	5.4
256–265	260	13.93	.0268	127.3	5.70	5.9	5.5
266–275	270	14.80	.0271	129.3	5.82	6.1	5.6
276–285	280	15.68	.0274	131.4	5.95	6.2	5.7
286–295	290	16.55	.0277	133.4	6.06	6.3	5.8
296–305	300	17.43	.0279	135.4	6.18	6.4	6.0
306–315	310	18.30	.0282	137.5	6.29	6.5	6.1
316–325	320	19.17	.0285	139.5	6.40	6.6	6.2
326–335	330	20.05	.0288	141.6	6.50	6.7	6.3
336–345	340	20.92	.0290	143.6	6.60	6.8	6.4
346–355	350	21.80	.0293	145.6	6.70	6.9	6.5
356–365	360	22.67	.0296	147.7	6.80	7.0	6.6
366–375	370	23.54	.0299	149.7	6.89	7.1	6.7

FIGURE F98–9—Continued

Loaded vehicle mass (kg)	Equivalent inertial mass (kg)	Force coefficients		Force at 65 km/h (nt)	70 to 60 km/h coastdown calibration times		
		A (nt)	C (nt/(km/h)^2)		Target time (sec)	Allowable tolerance	
						Longest time (sec)	Shortest time (sec)
376–385	380	24.42	.0301	151.7	6.98	7.2	6.8
386–395	390	25.29	.0304	153.8	7.07	7.3	6.9
396–405	400	26.17	.0307	155.8	7.16	7.4	6.9
406–415	410	27.04	.0310	157.8	7.24	7.5	7.0
416–425	420	27.91	.0312	159.9	7.33	7.6	7.1
426–435	430	28.79	.0315	161.9	7.41	7.6	7.2
436–445	440	29.66	.0317	163.7	7.49	7.7	7.3
446–455	450	30.54	.0318	164.9	7.61	7.8	7.4
456–465	460	31.41	.0319	166.0	7.73	8.0	7.5
466–475	470	32.28	.0319	167.1	7.84	8.1	7.6
476–485	480	33.16	.0320	168.3	7.95	8.2	7.7
486–495	490	34.03	.0320	169.4	8.06	8.3	7.8
496–505	500	34.90	.0321	170.5	8.17	8.4	7.9
506–515	510	35.78	.0322	171.7	8.28	8.5	8.0
516–525	520	36.65	.0322	172.8	8.39	8.6	8.2
526–535	530	37.53	.0323	173.9	8.49	8.7	8.3
536–545	540	38.40	.0323	175.1	8.60	8.8	8.4
546–555	550	39.27	.0324	176.2	8.70	9.0	8.5
556–565	560	40.15	.0325	177.3	8.80	9.1	8.6
566–575	570	41.02	.0325	178.5	8.90	9.2	8.7
576–585	580	41.90	.0326	179.6	9.00	9.3	8.8
586–595	590	42.77	.0327	180.8	9.10	9.4	8.9
596–605	600	43.64	.0327	181.9	9.19	9.5	8.9
606–615	610	44.52	.0328	183.0	9.29	9.5	9.0
616–625	620	45.39	.0328	184.2	9.38	9.6	9.1
626–635	630	46.27	.0329	185.3	9.47	9.7	9.2
636–645	640	47.14	.0330	186.4	9.56	9.8	9.3
646–655	650	48.01	.0330	187.6	9.65	9.9	9.4
656–665	660	48.89	.0331	188.7	9.74	10.0	9.5
666–675	670	49.76	.0332	189.8	9.83	10.1	9.6
676–685	680	50.64	.0332	191.0	9.92	10.2	9.7
686–695	690	51.51	.0333	192.1	10.01	10.3	9.8
696–705	700	52.38	.0333	193.2	10.09	10.4	9.8
706–715	710	53.26	.0334	194.4	10.17	10.4	9.9
716–725	720	54.13	.0335	195.5	10.26	10.5	10.0
726–735	730	55.01	.0335	196.6	10.34	10.6	10.1
736–745	740	55.88	.0336	197.8	10.42	10.7	10.2
746–755	750	56.75	.0336	198.9	10.50	10.8	10.2
756–765	760	57.63	.0337	200.1	10.58	10.9	10.3
766–775	770	58.50	.0338	201.2	10.66	10.9	10.3
776–785	780	59.38	.0338	203.3	10.74	11.0	10.4
786–795	790	60.25	.0339	204.5	10.82	11.1	10.5
796–805	800	61.12	.0339	205.6	10.91	11.2	10.6
806–815	810	62.00	.0340	206.7	10.99	11.3	10.7
816–825	820	62.87	.0341	207.9	11.07	11.4	10.8
826–835	830	63.75	.0341	209.0	11.15	11.5	10.8
836–845	840	64.62	.0342	210.1	11.24	11.5	10.9
846–855	850	65.49	.0343	211.3	11.32	11.6	11.0
856–865	860	66.37	.0343	212.4	11.40	11.7	11.1
866–873	870	67.24	.0344	213.5	11.48	11.8	11.2

(c) The dynamometer shall be adjusted to reproduce the specified road load as determined by the most recent calibration. Alternatively, the actual vehicle road load can be measured and duplicated:

(1) Make at least 5 replicate coastdowns in each direction from 70 to 60 km/h on a smooth, level track under balanced wind conditions. The driver must have a mass of 80 ±10 kg and be in the normal driving position. Record the coastdown time.

(2) Average the coastdown times. Adjust the dynamometer load so that the coastdown time is duplicated with the vehicle and driver on the dynamometer.

(3) Alternate procedures may be used if approved in advance by the Administrator.

[63 FR 11849, Mar. 11, 1998, as amended at 80 FR 9104, Feb. 19, 2015]

§ 86.530–78 Test sequence, general requirements.

(a) Ambient temperature levels encountered by the test vehicle throughout the test sequence shall not be less than 20 °C (68 °F) nor more than 30 °C (86 °F). The vehicle shall be approximately level during the emission test to prevent abnormal fuel distribution.

(b) [Reserved]

§ 86.531–78 Vehicle preparation.

(a) The manufacturer shall provide additional fittings and adapters, as required by the Administrator * * *, such as * * * to accommodate a fuel drain at the lowest point possible in the tank(s) as installed on the vehicle and to provide for exhaust sample collection.

(b) [Reserved]

§ 86.532–78 Vehicle preconditioning.

(a) The vehicle shall be moved to the test area and the following operations performed:

(1) The fuel tank(s) shall be drained through the provided fuel tank(s) drain(s) and charged with the specified test fuel, § 86.513, to half the tank(s) capacity.

(2) The vehicle shall be placed, either by being driven or pushed, on a dynamometer and operated through one Urban Dynamometer Driving Schedule test procedure (see § 86.515 and appendix I). The vehicle need not be cold, and may be used to set dynamometer horsepower.

(b) Within five (5) minutes of completion of preconditioning, the vehicle shall be removed from the dynamometer and may be driven or pushed to the soak area to be parked. The vehicle shall be stored for not less than the following times prior to the cold start exhaust test.

	Hours
Class I	6
Class II	8
Class III	12

In no case shall the vehicle be stored for more than 36 hours prior to the cold start exhaust test.

§ 86.535–90 Dynamometer procedure.

(a) The dynamometer run consists of two tests, a ''cold'' start test and a ''hot'' start test following the ''cold'' start by 10 minutes. Engine startup (with all accessories turned off), operation over the driving schedule, and engine shutdown make a complete cold start test. Engine startup and operation over the first 505 seconds of the driving schedule complete the hot start test. The exhaust emissions are diluted with ambient air and a continuously proportional sample is collected for analysis during each phase. The composite samples collected in bags are analyzed for hydrocarbons, carbon monoxide, carbon dioxide, and, optionally, for oxides of nitrogen. A parallel sample of the dilution air is similarly analyzed for hydrocarbon, carbon monoxide, carbon dioxide, and, optionally, for oxides of nitrogen. Methanol and formaldehyde samples (exhaust and dilution air) are collected and analyzed for methanol-fueled vehicles (a single dilution air formaldehyde sample covering the total time of the test may be collected in place of individual test phases).

(b) [Reserved]

(c) The vehicle speed, as measured from the dynamometer roll, shall be used. A speed *vs.* time recording, as evidence of dynamometer test validity, shall be supplied on request of the Administrator.

(d) Practice runs over the prescribed driving schedule may be performed at test points, provided an emission sample is not taken, for the purpose of finding the minimum throttle action to maintain the proper speed-time relationship, or to permit sampling system adjustments.

(e) The drive wheel tires must be inflated to the manufacturer's recommended pressure, ±15 kPa (±2.2 psi). The drive wheel tire pressure shall be reported with the test results.

(f) If the dynamometer has not been operated during the two-hour period immediately preceding the test, it shall be warmed up for 15 minutes by operating at 50 km/h (31 mph) using a

nontest vehicle, or as recommended by the dynamometer manufacturer.

(g) If the dynamometer horsepower must be adjusted manually, it shall be set within one hour prior to the exhaust emissions test phase. The test vehicle shall not be used to make this adjustment. Dynamometers using automatic control of preselectable power settings may be set anytime prior to the beginning of the emissions test.

(h) The driving distance, as measured by counting the number of dynamometer roll revolutions, shall be determined for the transient cold start, stabilized cold start, and transient hot start phases of the test.

[54 FR 14551, Apr. 11, 1989]

§ 86.536–78 Engine starting and restarting.

(a)(1) The engine shall be started according to the manufacturer's recommended starting procedures. The initial 20 second idle period shall begin when the engine starts.

(2) *Choke operation.* (i) Vehicles equipped with automatic chokes shall be operated according to the instructions in the manufacturer's operating instructions or owner's manual including choke setting and ''kick-down'' from cold fast idle. The transmission shall be placed in gear 15 seconds after the engine is started. If necessary, braking may be employed to keep the drive wheels from turning.

(ii) Vehicles equipped with manual chokes shall be operated according to the manufacturer's operating instructions or owner's manual. Where times are provided in the instructions, the Administrator may specify the specific point for operation, within 15 seconds of the recommended time.

(3) The operator may use the choke, throttle etc. where necessary to keep the engine running.

(4) If the manufacturer's operating instructions or owner's manual do not specify a warm engine starting procedure, the engine (automatic and manual choke engines) shall be started by opening the throttle about half way and cranking the engine until it starts.

(b) [Reserved]

(c) If, during the cold start, the vehicle does not start after 10 seconds of cranking, or ten cycles of the manual starting mechanism, cranking shall cease and the reason for failure to start determined. The revolution counter on the constant volume sampler shall be turned off and the sample solenoid valves placed in the ''standby'' position during this diagnostic period. In addition, either the CVS blower shall be turned off or the exhaust tube disconnected from the tailpipe during the diagnostic period.

(1) If failure to start is an operational error, the vehicle shall be rescheduled for testing from a cold start. If failure to start is caused by vehicle malfunction, corrective action (following the unscheduled maintenance provisions) of less than 30 minutes duration may be taken and the test continued. The sampling system shall be reactivated at the same time cranking is started. When the engine starts, the driving schedule timing sequence shall begin. If failure to start is caused by vehicle malfunction and the vehicle cannot be started, the test shall be voided, the vehicle removed from the dynamometer, corrective action taken (following the unscheduled maintenance provisions), and the vehicle rescheduled for test. The reason for the malfunction (if determined) and the corrective action taken shall be reported.

(2) If the vehicle does not start during the hot start after ten seconds of cranking, or ten cycles of the manual starting mechanism, cranking shall cease, the test shall be voided, the vehicle removed from the dynamometer, corrective action taken in accordance with § 86.428 or § 86.429, and the vehicle rescheduled for test. The reason for the malfunction (if determined) and the corrective action taken shall be reported.

(d) If the engine ''false starts'', the operator shall repeat the recommended starting procedure (such as resetting the choke, etc.)

(e) *Stalling.* (1) If the engine stalls during an idle period, the engine shall be restarted immediately and the test continued. If the engine cannot be started soon enough to allow the vehicle to follow the next acceleration as

prescribed, the driving schedule indicator shall be stopped. When the vehicle restarts, the driving schedule indicator shall be reactivated.

(2) If the engine stalls during some operating mode other than idle, the driving schedule indicator shall be stopped, the vehicle shall then be restarted and accelerated to the speed required at that point in the driving schedule and the test continued. During acceleration to this point, shifting shall be performed in accordance with § 86.528.

(3) If the vehicle will not restart within one minute, the test shall be voided, the vehicle removed from the dynamometer, corrective action taken, and the vehicle rescheduled for test. The reason for the malfunction (if determined) and the corrective action taken shall be reported.

§ 86.537–90 Dynamometer test runs.

(a) The vehicle shall be allowed to stand with the engine turned off (see § 86.532 for required time). The vehicle shall be stored prior to the emission test in such a manner that precipitation (e.g., rain or dew) does not occur on the vehicle. The complete dynamometer test consists of a cold start drive of 12.0 km (7.5 mi), (10.9 km (6.8 mi) for Class I motorcycles) and simulates a hot start drive of 12.0 km (7.5 mi), (10.9 km (6.8 mi) for Class I motorcycles). The vehicle is allowed to stand on the dynamometer during the 10-minute period between the cold and hot start tests. The cold start is divided into two periods. The first period, representing the cold start ''transient'' phase, terminates at the end of the deceleration which is scheduled to occur at 505 seconds of the driving schedule. The second period, representing the ''stabilized'' phase, consists of the remainder of the driving schedule including engine shutdown. The hot start test similarly consists of two periods. The period, representing the hot start ''transient'' phase, terminates at the same point in the driving schedule at the first point of the cold start test. The second period of the hot start test, ''stabilized'' phase, is assumed to be identical to the second period of the cold start test. Therefore, the hot start test terminates after the first period (505 seconds) is run.

(b) The following steps shall be taken for each test:

(1) Place drive wheel of vehicle on dynamometer without starting engine.

(2) Activate vehicle cooling fan.

(3) For all vehicles, with the sample selector valves in the ''standby'' position connect evacuated sample collection bags to the dilute exhaust and dilution air sample collection systems.

(4) For methanol-fueled vehicles, with the sample selector valves in the ''standby'' position, insert fresh sample collection impingers into the methanol sample collection system, fresh impingers or a fresh cartridge into the formaldehyde sample collection system and fresh impingers (or a single cartridge for formaldehyde) into the dilution air sample collection systems for methanol and formaldehyde (background measurements of methanol and formaldehyde may be omitted and concentrations assumed to be zero for calculations in § 86.544).

(5) Start the CVS (if not already on), the sample pumps and the temperature recorder. (The heat exchanger of the constant volume sampler, if used, methanol-fueled vehicle hydrocarbon analyzer and sample lines should be preheated to their respective operating temperatures before the test begins.)

(6) Adjust the sample flow rates to the desired flow rate and set the gas flow measuring devices to zero.

(i) For gaseous bag samples (except hydrocarbon samples), the minimum flow rate is 0.17 cfm (0.08 l/s).

(ii) For hydrocarbon samples, the minimum FID (or HFID in the case of methanol-fueled vehicles) flow rate is 0.066 cfm (0.031 l/s).

(iii) For methanol samples, the flow rates shall be set such that the system meets the design criteria of § 86.509. For samples in which the concentration in the primary impinger exceeds 0.5 mg/l, it is recommended that the mass of methanol collected in the secondary impinger not exceed ten percent of the total mass collected. For samples in which the concentration in the primary impinger does not exceed 0.5 mg/l, secondary impingers do not need to be analyzed.

(iv) For formaldehyde samples, the flow rates shall be set such that the system meets the design criteria of § 86.509. For impinger samples in which the concentration of formaldehyde in the primary impinger exceeds 0.1 mg/l, it is recommended that the mass of formaldehyde collected in the secondary impinger not exceed ten percent of the total mass collected. For samples in which the concentration in the primary impinger does not exceed 0.1 mg/l, secondary impingers do not need to be analyzed.

(7) Attach the flexible exhaust tube to the vehicle tailpipe(s).

(8) Start the gas flow measuring device, position the sample selector valves to direct the sample flow into the ''transient'' exhaust sample bag, the ''transient'' methanol exhaust sample, the ''transient'' formaldehyde exhaust sample, the ''transient'' dilution air sample bag, the ''transient'' methanol dilution air sample and the ''transient'' formaldehyde dilution air sample, turn the key on, and start cranking the engine.

(9) Fifteen seconds after the engine starts, place the transmission in gear.

(10) Twenty seconds after the engine starts, begin the initial vehicle acceleration of the driving schedule.

(11) Operate the vehicle according to the Urban Dynamometer Driving Schedule (§ 86.515).

(12) At the end of the deceleration which is scheduled to occur at 505 seconds, simultaneously switch the sample flows from the ''transient'' bags and samples to ''stabilized'' bags and samples, switch off gas flow measuring device No. 1 and, start gas flow measuring device No. 2. Before the acceleration which is scheduled to occur at 510 seconds, record the measured roll or shaft revolutions and reset the counter or switch to a second counter. As soon as possible, transfer the ''stabilized'' exhaust and dilution air samples to the analytical system and process the samples according to § 86.540, obtaining a stabilized reading of the exhaust bag sample on all analyzers within 20 minutes of the end of the sample collection phase of the test. Obtain methanol and formaldehyde sample analyses, if applicable, within 24 hours of the end of the sample period. (If it is not possible to perform analysis on the methanol and formaldehyde samples within 24 hours, the samples should be stored in a dark cold (4–10 °C) environment until analysis. The samples should be analyzed within fourteen days.)

(13) Turn the engine off 2 seconds after the end of the last deceleration (at 1,369 seconds).

(14) Five seconds after the engine stops running, simultaneously turn off gas flow measuring device No. 2 and position the sample selector valves to the ''standby'' position (and open the valves isolating particulate filter No. 1, if applicable). Record the measured roll or shaft revolutions (both gas meter or flow measurement instrumentation readings) and re-set the counter. As soon as possible, transfer the ''stabilized'' exhaust and dilution air samples to the analytical system and process the samples according to § 86.540, obtaining a stabilized reading of the exhaust bag sample on all analyzers within 20 minutes of the end of the sample collection phase of the test. Obtain methanol and formaldehyde sample analyses, if applicable, within 24 hours of the end of the sample period. (If it is not possible to perform analysis on the methanol and formaldehyde samples within 24 hours, the samples should be stored in a dark cold (4–10 °C) environment until analysis. The samples should be analyzed within fourteen days.)

(15) Immediately after the end of the sample period, turn off the cooling fan.

(16) Turn off the CVS or disconnect the exhaust tube from the tailpipe(s) of the vehicle.

(17) Repeat the steps in paragraph (b)(2) through (11) of this section for the hot start test, except only two evacuated sample bags, two methanol sample impingers, and two formaldehyde sample impingers are required. The step in paragraph (b)(8) of this section shall begin between 9 and 11 minutes after the end of the sample period for the cold start test.

(18) At the end of the deceleration which is scheduled to occur at 505 seconds, simultaneously turn off gas flow measuring device No. 1 and position the sample selector valve to the ''standby'' position. (Engine shutdown is not part of the hot start test sample

period.) Record the measured roll or shaft revolutions.

(19) As soon as possible, transfer the hot start ''transient'' exhaust and dilution air bag samples to the analytical system and process the samples according to § 86.540 obtaining a stabilized reading of the bag exhaust sample on all analyzers within 20 minutes of the end of the sample collection phase of the test. Obtain methanol and formaldehyde sample analyses, if applicable, within 24 hours of the end of the sample period (if it is not possible to perform analysis on the methanol and formaldehyde samples within 24 hours, the samples should be stored in a dark, cold (~ 0 °C) environment until analysis).

(20) Disconnect the exhaust tube from the vehicle tailpipe(s) and remove the vehicle from dynamometer.

(21) The CVS or CFV may be turned off, if desired.

(22) Continuous monitoring of exhaust emissions will not normally be allowed. Specific written approval must be obtained from the Administrator for continuous monitoring of exhaust emissions.

[54 FR 14551, Apr. 11, 1989, as amended at 60 FR 34357, June 30, 1995]

§ 86.540–90 Exhaust sample analysis.

The following sequence of operations shall be performed in conjunction with each series of measurements:

(a) For CO, CO_2, gasoline-fueled, natural gas-fueled, liquefied petroleum gas-fueled and methanol-fueled motorcycle HC and, if appropriate, NO_X:

(1) Zero the analyzers and obtain a stable zero reading. Recheck after tests.

(2) Introduce span gases and set instrument gains. In order to avoid errors, span and calibrate at the same flow rates used to analyze the test sample. Span gases should have concentrations equal to 75 to 100 percent of full scale. If gain has shifted significantly on the analyzers, check the calibrations. Show actual concentrations on chart.

(3) Check zeros; repeat the procedure in paragraphs (a) (1) and (2) of this section if required.

(4) Check flow rates and pressures.

(5) Measure HC, CO, CO_2, and, if appropriate, NO_X. concentrations of samples.

(6) Check zero and span points. If difference is greater than 2 percent of full scale, repeat the procedure in paragraphs (a) (1) through (5) of this section.

(b) For CH_3OH (methanol-fueled vehicles), introduce test samples into the gas chromatograph and measure the concentration. This concentration is C_{MS} in the calculations.

(c) For HCHO (methanol-fueled vehicles), introduce test samples into the high pressure liquid chromatograph and measure the concentration of formaldehyde as a dinitropheylhydrazine derivative in acetonitrile. This concentration is C_{FS} in the calculations.

[54 FR 14552, Apr. 11, 1989, as amended at 59 FR 48515, Sept. 21, 1994; 60 FR 34357, June 30, 1995]

§ 86.542–90 Records required.

The following information shall be recorded with respect to each test:

(a) Test number.

(b) System or device tested (brief description).

(c) Date and time of day for each part of the test schedule.

(d) Instrument operator.

(e) Driver or operator.

(f) *Vehicle:* Make, Vehicle identification number, Model year, Transmission type, Odometer reading at initiation of preconditioning, Engine displacement, Engine family, Emission control system, Recommended idle RPM, Nominal fuel tank capacity, Inertial loading, Actual curb mass recorded at 0 kilometers, and Drive wheel tire pressure.

(g) *Dynamometer serial number:* As an alternative to recording the dynamometer serial number, a reference to a vehicle test cell number may be used, with the advance approval of the Administrator, provided the test cell records show the pertinent instrument information.

(h) All pertinent instrument information such as tuning-gain-serial number-detector number-range. As an alternative, a reference to a vehicle test cell number may be used, with the advance

approval of the Administrator, provided test cell calibration records show the pertinent instrument information.

(i) Recorder Charts: Identify zero, span, exhaust gas, and dilution air sample traces.

(j) Test cell barometric pressure, ambient temperature and humidity.

NOTE: A central laboratory barometer may be used; *Provided*, that individual test cell barometric pressures are shown to be within ±0.1 percent of the barometric pressure at the central barometer location.

(k) [Reserved]

(l) Pressure of the mixture of exhaust and dilution air entering the CVS metering device, the pressure increase across the device, and the temperature at the inlet. The temperature may be recorded continuously or digitally to determine temperature variations.

(m) The number of revolutions of the positive displacement pump accumulated during each test phase while exhaust samples are being collected. The number of standard cubic meters metered by a critical flow venturi during each test phase would be the equivalent record for a CFV-CVS.

(n) The humidity of the dilution air.

NOTE: If conditioning columns are not used (see §§ 86.522 and 86.544) this measurement can be deleted. If the conditioning columns are used and the dilution air is taken from the test cell, the ambient humidity can be used for this measurement.

(o) The driving distance for each of the three phases of test, calculated from the measured roll or shaft revolutions.

(p) Additional required records for methanol-fueled vehicles:

(1) Specification of the methanol fuel, or fuel mixtures, used during testing.

(2) Volume of sample passed through the methanol sampling system and the volume of deionized water in each impinger.

(3) The methanol calibration information from the GC standards.

(4) The concentration of the GC analyses of the test samples (methanol).

(5) Volume of sample passed through the formaldehyde sampling system.

(6) The formaldehyde calibration information from the HPLC standards.

(7) The concentration of the HPLC analysis of the test sample (formaldehyde).

(q) *Additional required records for natural gas-fueled vehicles*. Composition, including all carbon containing compounds; e.g. CO_2, of the natural gas-fuel used during the test. C_1 and C_2 compounds shall be individually reported. C_3 and heavier hydrocarbons and C_6 and heavier compounds may be reported as a group.

(r) *Additional required records for liquefied petroleum gas-fueled vehicles*. Composition of the liquefied petroleum gas-fuel used during the test. Each hydrocarbon compound present, through C_4 compounds, shall be individually reported. C_5 and heavier hydrocarbons may be reported as a group.

[54 FR 14553, Apr. 11, 1989, as amended at 59 FR 48515, Sept. 21, 1994; 60 FR 34357, June 30, 1995]

§ 86.544–90 Calculations; exhaust emissions.

This section describes how to calculate exhaust emissions. Determine emission results for each pollutant to at least one more decimal place than the applicable standard. Apply the deterioration factor, then round the adjusted figure to the same number of decimal places as the emission standard. Compare the rounded emission levels to the emission standard for each emission data vehicle. In the case of NO_X + HC standards, apply the deterioration factor to each pollutant and then add the results before rounding.

(a) Calculate a composite FTP emission result using the following equation:

$$Y_{wm} = 0.43 \cdot \frac{Y_{ct} + Y_s}{D_{ct} + D_s} + 0.57 \cdot \frac{Y_{ht} + Y_s}{D_{ht} + D_s}$$

Where:

Y_{wm} = Weighted mass emissions of each pollutant (*i.e.*, CO_2, HC, CO, or NO_X) in grams per vehicle kilometer and if appropriate, the weighted carbon mass equivalent of total hydrocarbon equivalent, in grams per vehicle kilometer.

Y_{ct} = Mass emissions as calculated from the transient phase of the cold-start test, in grams per test phase.

Y_s = Mass emissions as calculated from the stabilized phase of the cold-start test, in grams per test phase.

D_{ct} = The measured driving distance from the transient phase of the cold-start test, in kilometers.

D_s = The measured driving distance from the stabilized phase of the cold-start test, in kilometers.

Y_{ht} = Mass emissions as calculated from the transient phase of the hot-start test, in grams per test phase.

D_{ht} = The measured driving distance from the transient phase of the hot-start test, in kilometers.

(b) The mass of each pollutant for each phase of both the cold-start test and the hot-start test is determined from the following:

(1) Hydrocarbon mass:

$$HC_{mass} = V_{mix} \times Density_{HC} \times (HC_{conc}/1{,}000{,}000)$$

(2) Oxides of nitrogen mass:

$$NOx_{mass} = V_{mix} \times Density_{NO2} \times K_H \times (NOx_{conc}/1{,}000{,}000)$$

(3) Carbon monoxide mass:

$$CO_{mass} = V_{mix} \times Density_{CO} \times (CO_{conc}/1{,}000{,}000)$$

(4) Carbon dioxide mass:

$$CO_{2mass} = V_{mix} \times Density_{CO2} \times (CO_{2conc}/100)$$

(5) Methanol mass:

$$CH_3OH_{mass} = V_{mix} \times Density_{CH3OH} \times (CH_3OH_{conc}/1{,}000{,}000)$$

(6) Formaldehyde mass:

$$HCHO_{mass} = V_{mix} \times Density_{HCHO} \times (HCHO_{conc}/1{,}000{,}000)$$

(7) Total hydrocarbon equivalent:

(i) $THCE = HC_{mass} + 13.8756/32.042 \times (CH_3OH)_{mass} + 13.8756/30.0262 \times (HCHO)_{mass}$

(8) Nitrous Oxide Mass:

$$V_{mix} \times Density_{N2O} \times (N_2O_{conc}/1{,}000{,}000)$$

(c) Meaning of symbols:

(1)(i) HC_{mass} = Hydrocarbon emissions, in grams per test phase.

(ii) $Density_{HC}$ = Density of HC in exhaust gas.

(A) *For gasoline-fuel;* $Density_{HC}$ = 576.8 g/m³-carbon atom (16.33 g/ft³-carbon atom), assuming an average carbon to hydrogen ratio of 1:1.85, at 20 °C (68 °F) and 101.3 kPa (760 mm Hg) pressure.

(B) *For natural gas and liquefied petroleum gas-fuel;* $Density_{HC}$ = 41.57(12.011 + H/C(1.008)) g/m³-carbon atom (1.1771(12.011 + H/C(1.008)) g/ft³-carbon atom) where H/C is the hydrogen to carbon ratio of the hydrocarbon components of test fuel, at 20 °C (68 °F) and 101.3 kPa (760mm Hg) pressure.

(iii)(A) HC_{conc} = Hydrocarbon concentration of the dilute exhaust sample corrected for background, in ppm carbon equivalent, i.e., equivalent propane × 3.

(B) $HC_{conc} = HC_e - HC_d(1 - (1/DF))$

Where:

(iv)(A) HC_e = Hydrocarbon concentrations of the dilute exhaust sample as measured, in ppm carbon equivalent (propane ppm × 3).

(B) $HC_e = FIDHC_e - (r)C_{CH3OHe}$

(v) FID HC_e = Concentration of hydrocarbon (plus methanol if methanol-fueled motorcycle is tested) in dilute exhaust as measured by the FID ppm carbon equivalent.

(vi) r = FID response to methanol.

(vii) C_{CH30He} = Concentration of methanol in dilute exhaust as determined from the dilute exhaust methanol sample, ppm carbon.

(viii)(A) HC_d = Hydrocarbon concentration of the dilution air as measured, ppm carbon equivalent.

(B) HC_d = FID $HC_d - (r)C_{CH30Hd}$

(ix) FID HC_d = Concentration of hydrocarbon (plus methanol if methanol-fueled motorcycle is tested) in dilution air as measured by the FID, ppm carbon equivalent.

(x) C_{CH3OHd} = Concentration of methanol in dilution air as determined from dilution air methanol sample, ppm carbon.

(2)(i) NOx_{mass} = Oxides of nitrogen emissions, grams per test phase.

(ii) $Density_{N02}$ = Density of oxides of nitrogen in the exhaust gas, assuming they are in the form of nitrogen dioxide, 1913 g/m³ (54.16 g/ft³), at 20 °C (68 °F) and 101.3 kPa (760 mm Hg) pressure.

(iii)(A) NOx_{conc} = Oxides of nitrogen concentration of the dilute exhaust sample corrected for background, ppm.

(B) $NOx_{conc} = NOx_e - NOx_d(1 - (1/DF))$

Where:

(iv) NOx_e = Oxides of nitrogen concentration of the dilute exhaust sample as measured, ppm.

(v) NOx_d = Oxides of nitrogen concentration of the dilution air as measured, ppm.

(3)(i) CO_{mass} = Carbon monoxide emissions, in grams per test phase.

(ii) $Density_{CO}$ = Density of carbon monoxide, 1164 g/m³ (32.97 g/ft³), at 20 °C (68 °F) and 101.3 kPa (760 mm Hg) pressure.

(iii)(A) CO_{conc} = Carbon monoxide concentration of the dilute exhaust sample corrected for background, water vapor, and CO_2 extraction, ppm.

(B) $CO_{conc} = CO_e - CO_d(1 - (1/DF))$

Where:

(iv)(A) CO_e = Carbon monoxide concentration of the dilute exhaust sample volume corrected for water vapor and carbon dioxide extraction, in ppm.

(B) $CO_e = (1 - 0.01925CO_{2e} - 0.000323R)CO_{em}$ for gasoline-fueled vehicles with hydrogen to carbon ratio of 1.85:1

(C) $CO_e = [1 - (0.01 + 0.005HCR)\ CO_{2e} - 0.000323R]CO_{em}$ for methanol-fueled, natural gas-fueled or liquefied petroleum gas-fueled motorcycles, where HCR is hydrogen to carbon ratio as measured for the fuel used.

(v) CO_{em} = Carbon monoxide concentration of the dilute exhaust sample as measured, ppm

(vi) CO_{2e} = Carbon dioxide concentration of the dilute exhaust sample, pct.

(vii) R = Relative humidity of the dilution air, pct (see § 86.542(n)).

(viii)(A) CO_d = Carbon monoxide concentration of the dilution air corrected for water vapor extraction, ppm.

(B) $CO_d = (1 - 0.000323R)CO_{dm}$

Where:

(ix) CO_{dm} = Carbon monoxide concentration of the dilution air sample as measured, ppm.

NOTE: If a CO instrument which meets the criteria specified in § 86.511 is used and the conditioning column has been deleted, CO_{em} can be substituted directly for CO_e and CO_{dm} must be substituted directly for CO_d.

(4)(i) CO_{2mass} = Carbon dioxide emissions, grams per test phase.

(ii) $Density_{C02}$ = Density of carbon dioxide, 1830 g/m³ (51.81 g/ft³), at 20 °C (68 °F) and 101.3 kPa (760 mm Hg) pressure.

(iii)(A) CO_{2conc} = carbon dioxide concentration of the dilute exhaust sample corrected for background, in percent.

(B) $CO_{2conc} = CO_{2e} - CO_{2d}(1 - 1/DF)$

Where:

(iv) CO_{2d} = Carbon dioxide concentration of the dilution air as measured, in percent.

(5)(i) CH_3OH_{mass} = Methanol emissions corrected for background, grams per test phase.

(ii) $Density_{CH3OH}$ = Density of methanol is 1332 g/m³ (37.71 g/ft³), at 20 °C (68 °F) and 101.3 kPa (760 mm Hg) pressure.

(iii)(A) CH_3OH_{conc} = Methanol concentration of the dilute exhaust corrected for background, ppm.

(B) $CH_3OH_{conc} = C_{CH3OHe} - C_{CH3OHd}(1 - (1/DF))$

Where:

(iv)(A) C_{CH3OHe} = Methanol concentration in the dilute exhaust, ppm.

(B)

$$C_{CH3OHe} = \frac{3.813 \times 10^{-2} \times T_{EM}\left[\left(C_{S1} \times AV_{S1}\right) + \left(C_{S2} \times AV_{S2}\right)\right]}{P_B \times V_{EM}}$$

(v)(A) C_{CH3OHd} = Methanol concentration in the dilution air, ppm.

(B)

$$C_{CH3OHd} = \frac{3.813 \times 10^{-2} \times T_{DM}\left[\left(C_{D1} \times AV_{D1}\right) + \left(C_{D2} \times AV_{D2}\right)\right]}{P_B \times V_{DM}}$$

(vi) T_{EM} = Temperature of methanol sample withdrawn from dilute exhaust, °R.

(vii) T_{DM} = Temperature of methanol sample withdrawn from dilution air, °R.

(viii) P_B = Barometric pressure during test, mm Hg.

(ix) V_{EM} = Volume of methanol sample withdrawn from dilute exhaust, ft^3.

(x) V_{DM} = Volume of methanol sample withdrawn from dilution air, ft^3.

(xi) C_s = GC concentration of sample drawn from dilute exhaust, μg/ml.

(xii) C_D = GC concentration of sample drawn from dilution air, μg/ml.

(xiii) AV_s = Volume of absorbing reagent (deionized water) in impinger through which methanol sample from dilute exhaust is drawn, ml.

(xiv) AV_D = Volume of absorbing reagent (deionized water) in impinger through which methanol sample from dilution air is drawn, ml.

(xv) 1 = first impinger.

(xvi) 2 = second impinger.

(6)(i) $HCHO_{mass}$ = Formaldehyde emissions corrected for background, grams per test phase.

(ii) $Density_{HCHO}$ = Density of formaldehyde is 1249 g/m^3 (35.36 g/ft^3), at 20 °C (68 °F) and 101.3 kPa (760 mm Hg) pressure.

(iii)(A) $HCHO_{conc}$ = Formaldehyde concentration of the dilute exhaust corrected for background, ppm.

(B) $HCHO_{conc} = C_{HCHOe} - C_{HCHOd}\ (1 - (1/DF))$

Where:

(iv)(A) C_{HCHOe} = Formaldehyde concentration in dilute exhaust, ppm.

(B)

$$C_{HCHO_e} = \frac{4.069 \times 10^{-2} \times C_{FDE} \times V_{AE} \times Q \times T_{EF}}{V_{SE} \times P_B}$$

(v)(A) C_{HCHOd} = Formaldehyde concentration in dilution air, ppm.

(B)

$$C_{HCHOd} = \frac{4.069 \times 10^{-2} \times C_{FDA} \times V_{AA} \times Q \times T_{DF}}{V_{SA} \times P_B}$$

(vi) C_{FDE} = Concentration of DNPH derivative of formaldehyde from dilute exhaust sample in sampling solution, μg/ml.

(vii) V_{AE} = Volume of sampling solution for dilute exhaust formaldehyde sample, ml.

(viii)(A) Q = Ratio of molecular weights of formaldehyde to its DNPH derivative.

(B) Q = 0.1429

(ix) T_{EF} = Temperature of formaldehyde sample withdrawn from dilute exhaust, °R.

(x) V_{SE} = Volume of formaldehyde sample withdrawn from dilute exhaust, ft^3.

(xi) P_B = Barometric pressure during test, mm Hg.

(xii) C_{FDA} = Concentration of DNPH derivative of formaldehyde from dilution air sample in sampling solution, μg/ml.

(xiii) V_{AA} = Volume of sampling solution for dilution air formaldehyde sample, ml.

(xiv) T_{DF} = Temperature of formaldehyde sample withdrawn from dilution air, °R.

(xv) V_{SA} = Volume of formaldehyde sample withdrawn from dilution air, ft^3.

(7)(i) DF = $13.4/[CO_{2e} + (HC_e = CO_e)10^{-4}]$ for gasoline-fueled vehicles.

(ii) For methanol-fueled, natural gas-fueled or liquefied petroleum gas-fueled motorcycles, where fuel composition is $C_x H_y O_z$ as measured, or calculated, for the fuel used (for natural gas and liquefied petroleum gas-fuel, Z = 0):

$$DF = \frac{(100)\dfrac{x}{(x + y/2 + 3.76)(x + y/2 - z/2)}}{CO_{2e} + (HC_e + CO_e + CH_3OH_e = HCHO_e) \times 10^{-4}}$$

(iii)(A) V_{mix} = Total dilute exhaust volume in cubic meters per test phase corrected to standard conditions (293 °K (528 °R) and 101.3 kPa (760 mm Hg)).

(B)

$$V_{mix} = \frac{V_o \times N \times (P_B - P_i) \times 293}{101.3 \times T_p}$$

Where:

(iv) V_o = Volume of gas pumped by the positive displacement pump, in cubic meters per revolution. This volume is dependent on the pressure differential across the positive displacement pump. (See calibration techniques in § 86.519.)

(v) N = Number of revolutions of the positive displacement pump during the test phase while samples are being collected.

(vi) P_B = Barometric pressure, kPa.

(vii) P_i = Pressure depression below atmospheric measured at the inlet to the positive displacement pump, kPa.

(viii) T_p = Average temperature of dilute exhaust entering positive displacement pump during test while samples are being collected, °K.

(ix)(A) K_h = Humidity correction factor.

(B) $K_h = 1/[1 - 0.0329(H - 10.71)]$

Where:

(x)(A) H = Absolute humidity in grams of water per kilogram of dry air.

(B) $H = [(6.211)R_a \times P_d]/[P_B - (P_d \times R_a/100)]$

(xi) R_a = Relative humidity of the ambient air, pct.

(xii) P_d = Saturated vapor pressure, in kPa at the ambient dry bulb temperature.

(xiii) P_B = Barometric pressure, kPa.

(8)(i) N_2O_{mass} = Nitrous oxide emissions, in grams per test phase.

(ii) Density N2O = Density of nitrous oxide is 51.81 g/ft^3 (1.83 kg/m^3), at 68 °F (20 °C) and 760 mm Hg (101.3kPa) pressure.

(iii)(A) N_2O_{conc} = Nitrous oxide concentration of the dilute exhaust sample corrected for background, in ppm.

(B) $N_2O_{conc} = N_2O_e - N_2O_d(1 - (1/DF))$.

Where:

N_2O_e = Nitrous oxide concentration of the dilute exhaust sample as measured, in ppm.

N_2O_d = Nitrous oxide concentration of the dilution air as measured, in ppm.

(d) Sample calculation of mass emission values for gasoline-fueled vehicles with engine displacements equal to or greater than 170 cc (10.4 cu. in.):

(1) For the ''transient'' phase of the cold-start test, assume V_o = 0.0077934 m^3 per rev; N = 12,115; R = 20.5 pct; R_a = 20.5 pct; P_B = 99.05 kPa; P_d = 3.382 kPa; P_i = 9.851 kPa; T_p = 309.8 °K; HC_e = 249.75 ppm carbon equivalent; NOx_e = 38.30 ppm; CO_{em} = 311.23 ppm; CO_{2e} = 0.415 percent; HC_d = 4.90 ppm; NOx_d = 0.30 ppm; CO_{dm} = 8.13 ppm; CO_{2d} = 0.037 pct; D_{ct} = 5.650 km.

Then:

(i) V_{mix} = [(0.0077934)(12,115)(99.05–9.851)(293.15)]/ [(101.325)(309.8)] = 78.651 m^3 per test phase.

(ii) $H = [(6.211)(20.5)(3.382)]/[(99.05) - (3.382)(20.5/100)] = 4.378$ grams H_2O per kg dry air.

(iii) $K_h = 1/[1 - 0.0329(4.378 - 10.71)] = 0\ 8276$

(iv) $CO_c = [1 - 0.01925(0.415) - 0.000323(20.5)](311.23) = 306.68$ ppm.

(v) $CO_d = [1 - 0.000323(20.5)](8.13) = 8.08$ ppm.

(vi) $DF = 13.4/[0.415 + (249.75 + 306.68)10^{-4}] = 28.472$

(vii) $HC_{conc} = 249.75 - 4.90(1 - 1/28.472) = 245.02$ ppm.

(viii) $HC_{mass} = (78.651)\ (576.8)\ (245.02)\ 10^{-6} = 11.114$ grams per test phase.

(ix) $NOx_{conc} = 38.30 - 0.30(1 - 1/28.472) = 38.01$ ppm.

(x) $NOx_{mass} = (78.651)(1913)(38.01)(0.8276) \times 10^{-6} = 4.733$ grams per test phase.

(xi) $CO_{conc} = 306.68 - 8.08\ (1 - 1/28.472) = 298.88$ ppm.

(xii) $CO_{mass} = (78.651)\ (1164)\ (298.88)\ (10^{-6}) = 27.362$ grams per test phase.

(xiii) $CO_{2conc} = 0.415 - 0.037\ (1 - 1/28.472) = 0.3793$ percent.

(xiv) $CO_{2mass} = (78.651)(1843)(0.3793)/100 = 549.81$ grams per test phase.

(2) For the ''stabilized'' portion of the cold-start test, assume that similar calculations resulted in $HC_{mass} = 7.184$ grams per test phase; $NOx_{mass} = 2.154$ grams per test phase; $CO_{mass} = 64.541$ grams per test phase; and $CO_{2mass} = 529.52$ grams per test phase. $D_s = 6.070$ km.

(3) For the ''transient'' portion of the hot-start test, assume that similar calculations resulted in $HC_{mass} = 6.122$ grams per test phase; $NOx_{mass} = 7.056$ grams per test phase; $CO_{mass} = 34.964$ grams per test phase; and $CO_{2mass} = 480.93$ grams per test phase. $D_{ht} = 5.660$ km.

(4) For a 1978 motorcycle with an engine displacement equal to or greater than 170 cc (10.4 cu. in):

(i) $HC_{wm} = 0.43\ [(11.114 + 7.184)/(5.650 + 6.070)] + 0.57\ [(6.122 + 7.184)/(5.660 + 6.070)] = 1.318$ grams per vehicle kilometer.

(ii) $NOx_{wm} = 0.43\ [(4.733 = 2.154)/(5.650 = 6.070)] = 0.57\ [(7.056 = 2.154)/(5.660 = 6.070)] = 0.700$ gram per vehicle kilometer.

(iii) $CO_{wm} = 0.43\ [(27.362 + 64.541)/(5.650 + 6.070)] + 0.57\ [(34.964 + 64.541)/(5.660 + 6.070)] = 8.207$ grams per vehicle kilometer.

(iv) $CO_{2wm} = 0.43\ [(549.81 + 529.52)/(5.650 + 6.070)] + 0.57\ [(480.93 + 529.52)/(5.660 + 6.070)] = 88.701$ grams per vehicle kilometer.

[54 FR 14553, Apr. 11, 1989, as amended at 59 FR 48515, Sept. 21, 1994; 60 FR 34358, June 30, 1995; 69 FR 2441, Jan. 15, 2004; 76 FR 57377, Sept. 15, 2011; 81 FR 73980, Oct. 25, 2016]

§§ 86.545–86.599 [Reserved]

Subpart G—Selective Enforcement Auditing of New Light-Duty Vehicles, Light-Duty Trucks, and Heavy-Duty Vehicles

SOURCE: 41 FR 31483, July 28, 1976, unless otherwise noted.

§§ 86.601–1—86.601–83 [Reserved]

§ 86.601–84 Applicability.

The provisions of this subpart apply to light-duty vehicles, light-duty trucks, and heavy-duty vehicles. However, manufacturers that optionally certify heavy-duty vehicles based on chassis testing under § 86.1863–07 may choose instead to perform selective enforcement audits using the procedures specified in 40 CFR part 1068, subpart E. References to ''light-duty vehicle'' or ''LDT'' in this subpart G shall be deemed to include light-duty trucks and heavy-duty vehicles as appropriate.

(a) *Section numbering; construction.* (1) The model year of initial applicability is indicated by the two digits following the hyphen of the section number. A section remains in effect for subsequent model years until it is superseded.

(2) A section reference without a model year suffix shall be interpreted to be a reference to the section applicable to the appropriate model year.

(b) References in this subpart to engine families and emission control systems shall be deemed to refer to durability groups and test groups as applicable for manufacturers certifying new light-duty vehicles and light-duty

trucks under the provisions of subpart S of this part.

(Secs. 206, 208(a) and 301(a), Clean Air Act, as amended, 42 U.S.C. 7525, 7542(a) and 7601(a))

[49 FR 69, Jan. 3, 1984. Redesignated at 54 FR 2122, Jan. 19, 1989, as amended at 62 FR 31234, June 6, 1997; 64 FR 23922, May 4, 1999; 75 FR 22980, Apr. 30, 2010]

§ 86.602–84 Definitions.

(a) The definitions in this section apply to this subpart.

(b) As used in this subpart, all terms not defined herein have the meaning given them in the Act.

(1) *Acceptable Quality Level* (AQL) means the maximum percentage of failing vehicles that, for purposes of sampling inspection, can be considered satisfactory as a process average.

(2) *Axle Ratio* means all ratios within ±3% of the axle ratio specified in the configuration in the test order.

(3) *Configuration* means a subclassification of an engine-system combination on the basis of engine code, inertia weight class, transmission type and gear ratios, axle ratio, and other parameters which may be designated by the Administrator.

(4) *Test Sample* means the collection of vehicles of the same configuration which have been drawn from the population of vehicles of that configuration and which will receive exhaust emission testing.

(5) *Inspection Criteria* means the pass and fail numbers associated with a particular sampling plan.

(6) *Vehicle* means any new production light-duty vehicle as defined in subpart A of this part.

(7) *Test Vehicle* means a vehicle in a test sample.

(8) *In the Hands of the Manufacturer* means that vehicles are still in the possession of the manufacturer and have not had their bills of lading transferred to another person for the purpose of transporting.

[49 FR 48480, Dec. 12, 1984. Redesignated at 54 FR 2122, Jan. 19, 1989]

§ 86.602–98 Definitions.

Section 86.602–98 includes text that specifies requirements that differ from § 86.602–84. Where a paragraph in § 86.602–84 is identical and applicable to § 86.602–98, this may be indicated by specifying the corresponding paragraph and the statement ''[Reserved]. For guidance see § 86.602–84.'' Where a corresponding paragraph of § 86.602–84 is not applicable, this is indicated by the statement ''[Reserved].''.

(a) through (b)(2) [Reserved]. For guidance see § 86.602–84.

(b)(3)(i) *Configuration*, when used for LDV exhaust emissions testing, means a subclassification of an engine-system combination on the basis of engine code, inertia weight class, transmission type and gear ratios, axle ratio, and other parameters which may be designated by the Administrator.

(ii) *Configuration*, when used for LDV refueling emissions testing, means a subclassification of an evaporative/refueling emission family on the basis of evaporative and refueling control system and other parameters which may be designated by the Administrator.

(4) *Test sample* means the collection of vehicles of the same configuration which have been drawn from the population of vehicles of that configuration and which will receive emission testing.

(b)(5) through (b)(8) [Reserved]. For guidance see § 86.602–84.

(9) *Executive Officer* means the Executive Officer of the California Air Resources Board or his or her authorized representative.

(10) *Executive Order* means the document the Executive Officer grants a manufacturer for an engine family that certifies the manufacturer has verified that the engine family complies with all applicable standards and requirements pursuant to Title 13 of the California Code of Regulations.

(11) *50-state engine family* means an engine family that meets both federal and California Air Resources Board motor vehicle emission control regulations and has received a federal certificate of conformity as well as an Executive Order.

[59 FR 16300, Apr. 6, 1994, as amended at 62 FR 31234, June 6, 1997]

§ 86.603–88 Test orders.

(a) The Administrator will require any testing under this subpart by means of a test order addressed to the manufacturer.

(b) The test order will be signed by the Assistant Administrator for Air and Radiation or his designee. The test order will be delivered in person by an EPA Enforcement Officer to a company representative or sent by registered mail, return receipt requested, to the manufacturer's representative who signs the Application for Certification submitted by the manufacturer pursuant to the requirements of the applicable sections of subpart A of this part. Upon receipt of a test order, the manufacturer shall comply with all of the provisions of this subpart and instructions in the test order.

(c)(1) The test order will specify the vehicle configuration selected for testing, the time and location at which vehicles must be selected, and the procedure by which vehicles of the specified configuration must be selected. The test order may specify the number of vehicles to be selected per day and may include alternative configurations (primary, secondary, etc.) to be selected for testing in the event that vehicles of the first specified configuration are not available for testing because those vehicles are not being manufactured at the specified assembly plant, not being manufactured during the specified time, or not being stored at the specified assembly plant or associated storage facility. If total production of the specified vehicle configuration is less than the number specified in the test order, the manufacturer will select the actual number of vehicles produced per day. If the first specified configuration is not being manufactured at a rate of at least four vehicles per day over the expected duration of the audit, the Assistant Administrator for Air and Radiation or his designated representative may select vehicles of a primary alternate configuration for testing in lieu of the first specified configuration. Likewise, vehicles of a secondary alternate configuration may be selected in lieu of vehicles of the first specified configuration or primary alternate configuration. In addition, the test order may include other directions or information essential to the administration of the required testing.

(2) The following instructions are applicable to each test order issued under this subpart:

(i) The manufacturer shall make the following documents available to an EPA Enforcement Officer upon request:

(A) A properly filed and current Application for Certification following the format prescribed by the EPA for the appropriate model year; and

(B) A copy of the shop manual, dealer service bulletins, and pre-delivery inspection procedures for the configuration being tested.

(ii) Only one mechanic at a time per vehicle shall make authorized checks, adjustments, or repairs, unless a particular check, adjustment, or repair requires a second mechanic as indicated in the shop manual or dealer service bulletins.

(iii) A mechanic shall not perform any check, adjustment, or repair without an Enforcement Officer present unless otherwise authorized.

(iv) The manufacturer shall utilize only those tools and test equipment utilized by its dealers when performing authorized checks, adjustments, or repairs.

(d) A manufacturer may indicate preferred assembly plants for the various engine families produced by the manufacturer for selection of vehicles in response to a test order. This shall be accomplished by submitting a list of engine families and the corresponding assembly plants from which the manufacturer desires to have vehicles selected to the Administrator. In order that a manufacturer's preferred location for issuance of a test order for a configuration of a particular engine family be considered, the list must be submitted prior to issuance of the test order. Notwithstanding the fact that a manufacturer has submitted the above list, the Administrator may, upon making the determination that evidence exists indicating noncompliance at other than the manufacturer's preferred plant, order testing at such other plant where vehicles of the configuration specified in the test order are assembled.

(e) During a given model year, the Administrator shall not issue to a manufacturer more SEA test orders than an annual limit determined by dividing the projected sales bound for the U.S. market for that model year, as made by the manufacturer in its report submitted under paragraph (a)(2) of

§ 600.207–80 of the Automobile Fuel Economy Regulations, by 300,000 and rounding to the nearest whole number, unless the projected sales are less than 150,000, in which case the annual limit is one. However, the annual limit for SEA test orders will be recalculated if a manufacturer submits to EPA in writing prior to or during the model year a sales projection update.

(1) Any SEA test order for which the configuration fails in accordance with § 86.610 or for which testing is not completed does not count against the annual limit.

(2) When the annual limit has been met, the Administrator may issue additional test orders for those configurations for which evidence exists indicating noncompliance. An SEA test order issued on this basis will include a statement as to the reason for its issuance.

[41 FR 31483, July 28, 1976, as amended at 43 FR 4552, Feb. 2, 1978; 49 FR 48480, Dec. 12, 1984. Redesignated and amended at 54 FR 2122, Jan. 19, 1989]

§ 86.603–98 Test orders.

Section 86.603–98 includes text that specifies requirements that differ from § 86.603–88. Where a paragraph in § 86.603–88 is identical and applicable to § 86.603–98, this may be indicated by specifying the corresponding paragraph and the statement ''[Reserved]. For guidance see § 86.603–88.'' Where a corresponding paragraph of § 86.603–88 is not applicable, this is indicated by the statement ''[Reserved].''.

(a) through (c) [Reserved]. For guidance see § 86.603–88.

(d) A manufacturer may indicate preferred assembly plants for the various engine families and evaporative/refueling families produced by the manufacturer for selection of vehicles in response to a test order. This shall be accomplished by submitting a list of engine families with the associated evaporative/refueling families, and the corresponding assembly plants from which the manufacturer desires to have vehicles selected, to the Administrator. In order that a manufacturer's preferred location for issuance of a test order for a configuration of a particular engine family and/or evaporative/refueling family be considered, the list must be submitted prior to issuance of the test order. Notwithstanding the fact that a manufacturer has submitted the above list, the Administrator may, upon making the determination that evidence exists indicating noncompliance at other than the manufacturer's preferred plant, order selection at such other plant where vehicles of the configuration specified in the test order are assembled.

(e) [Reserved]. For guidance see § 86.603–88.

(f) In the event evidence exists indicating an engine family is in noncompliance, the Administrator may, in addition to other powers provided by this section, issue a test order specifying the engine family the manufacturer is required to test.

[59 FR 16300, Apr. 6, 1994, as amended at 62 FR 31234, June 6, 1997]

§ 86.604–84 Testing by the Administrator.

(a) The Administrator may require by test order that vehicles of a specified configuration be selected in a manner consistent with the requirements of § 86.607 and submitted to him at such place as he may designate for the purpose of conducting emission tests. These tests shall be conducted in accordance with § 86.608 of these regulations to determine whether vehicles manufactured by the manufacturer conform with the regulations with respect to which the certificate of conformity was issued.

(b)(1) Whenever the Administrator conducts a test on a test vehicle or the Administrator and manufacturer each conduct a test on the same test vehicle, the results of the Administrator's test shall comprise the official data for that vehicle.

(2) Whenever the manufacturer conducts all tests on a test vehicle, the manufacturer's test data will be accepted as the official data: *Provided*, That if the Administrator makes a determination based on testing under paragraph (a) of this section that there is a substantial lack of agreement between the manufacturer's test results and the Administrator's test results, no manufacturer's test data from the manufacturer's test facility will be accepted for purposes of this subpart.

(c) In the event that testing conducted under paragraph (a) of this section demonstrates a lack of agreement under paragraph (b)(2), of this section, the Administrator will:

(1) Notify the manufacturer in writing of his determination that the test facility is inappropriate for conducting the tests required by this subpart and the reasons therefor, and

(2) Reinstate any manufacturer's data upon a showing by the manufacturer that the data acquired under paragraph (a) of this section was erroneous and the manufacturer's data was correct.

(d) The manufacturer may request in writing that the Administrator reconsider his determination in paragraph (b)(2) of this section based on data or information which indicates that changes have been made to the test facility and such changes have resolved the reasons for disqualification.

[41 FR 31483, July 28, 1976, as amended at 49 FR 48481, Dec. 12, 1984. Redesignated at 54 FR 2123, Jan. 19, 1989]

§ 86.605–88 Maintenance of records; submittal of information.

(a) The manufacturer of any new motor vehicle subject to any of the standards or procedures prescribed in this part shall establish, maintain and retain the following adequately organized and indexed records:

(1) *General records.* (i) A description of all equipment used to test vehicles in accordance with § 86.608 pursuant to a test order issued under this subpart, including the following information:

(A) *Dynamometer.* (*1*) Inertia loading.

(*2*) Road load power absorption at 50 m.p.h.

(*3*) Manufacturer, model and serial number.

(B) *Constant volume sampler.* (*1*) Pressure of the mixture of exhaust and dilution air entering the positive displacement pump, pressure increase across the pump, and the temperature set point of the temperature control system.

(*2*) Number of revolutions of the positive displacement pump accumulated while test is in progress and exhaust samples are being collected.

(*3*) Humidity of dilution air.

(*4*) Manufacturer, model, type and serial number.

(C) *Instrumentation.* (*1*) Manufacturer, model and serial number for each analyzer.

(*2*) Pertinent information such as tuning, gain, ranges and calibration data.

(*3*) Identification of zero, span, exhaust gas and dilution air sample traces.

(*4*) Temperature set point of heated sample line and heated hydrocarbon detector temperature control system (for diesel vehicles only).

(D) *Test cell.* (*1*) Barometric pressure, ambient temperature and humidity.

(*2*) Data and time of day.

(ii) In lieu of recording test equipment information, reference to a vehicle test cell number may be used, with the advance approval of the Administrator: Provided, the test cell records show the pertinent information.

(2) *Individual records.* These records pertain to each audit conducted pursuant to this subpart.

(i) The location where audit testing was performed, and the date and time for each emissions test.

(ii) The number of miles on the test vehicle when the test began and ended.

(iii) The names of supervisory personnel responsible for the conduct of the audit.

(iv) A record and description of any repairs performed prior to and/or subsequent to approval by the Administrator, giving the date and time of the repair, the reason for it, the person authorizing it, and the names of supervisory personnel responsible for the repair.

(v) The dates when the test vehicles were shipped from the assembly plant or the storage facility and when they were received at the testing facility.

(vi) The drive wheel tire pressure and the inertia weight class for each test vehicle, and the actual curb weight for each test vehicle required to be weighed pursuant to a test order.

(vii) A complete record of all emission tests performed pursuant to this subpart (except tests performed by EPA directly) including all individual worksheets and/or other documentation relating to each test, or exact copies thereof.

(viii) A brief description of all significant audit events, commencing with the test vehicle selection process, but not described by any other subparagraph under paragraph (a)(2) of this section, including such extraordinary events as vehicle accident.

(ix) A paper copy of the driver's trace for each test.

(3) Additional required records for diesel vehicles.

(4) The manufacturer shall record test equipment description, pursuant to paragraph (a)(1) of this section, for each test cell that is used to perform emission testing under this subpart.

(b) All records required to be maintained under this subpart shall be retained by the manufacturer for a period of one (1) year after completion of all testing in response to a test order. Records may be retained as hard copy or reduced to microfilm, punch cards, etc., depending upon the record retention procedures of the manufacturer: *Provided*, That in every case all the information contained in the hard copy shall be retained.

(c) The manufacturer shall, pursuant to a request made by the Administrator, submit to the Administrator the following information with regard to vehicle production:

(1) Number of vehicles, by configuration and assembly plant, scheduled for production for the time period designated in the request.

(2) Number of vehicles, by configuration and assembly plant, produced during the time period designated in the request which are complete for introduction into commerce.

(d) Nothing in this section shall limit the Administrator's discretion to require the manufacturer to retain additional records or submit information not specifically required by this section.

(e) All reports, submissions, notifications and requests for approvals made under this subpart shall be addressed to:

Director, Manufacturers Operations Division EN–340), U.S. Environmental Protection Agency, 1200 Pennsylvania Ave., NW., Washington, DC 20460.

[41 FR 31483, July 28, 1976, as amended at 44 FR 61962, Oct. 29, 1979; 49 FR 48481, Dec. 12, 1984. Redesignated at 54 FR 2123, Jan. 19, 1989]

§ 86.605–98 Maintenance of records; submittal of information.

Section 86.605–98 includes text that specifies requirements that differ from § 86.605–88. Where a paragraph in § 86.605–88 is identical and applicable to § 86.605–98, this may be indicated by specifying the corresponding paragraph and the statement ''[Reserved]. For guidance see § 86.605–88.'' Where a corresponding paragraph of § 86.605–88 is not applicable, this is indicated by the statement ''[Reserved].''.

(a) through (a)(1)(i)(D) [Reserved]. For guidance see § 86.605–88.

(E) *Refueling enclosure (refueling SHED)*. (*1*) Total internal volume.

(*2*) Capacity of mixing blower.

(*3*) Location of refueling access ports.

(*4*) Enclosure barometric pressure and ambient temperature.

(*5*) Soak area temperature records.

(F) *Fuel dispenser for refueling*. (*1*) Fuel dispensing rate.

(*2*) Manufacturer and model of fuel nozzle.

(*3*) Dispensed fuel temperature.

(*4*) Dispensed fuel volume.

(a)(1)(ii) through (e) [Reserved]. For guidance see § 86.605–88.

(2) [Reserved]

[59 FR 16301, Apr. 6, 1994]

§ 86.606–84 Entry and access.

(a) In order to allow the Administrator to determine whether a manufacturer is complying with the provisions of this subpart and a test order issued thereunder, EPA Enforcement Officers may enter during normal operating hours upon presentation of credentials any of the following:

(1) Any facility where any vehicle to be introduced into commerce or any emission-related component is or has been manufactured, assembled, or stored;

(2) Any facility where any tests conducted pursuant to a test order or any procedures or activities connected with such tests are or were performed;

(3) Any facility where any vehicle which is being, was, or is to be tested is present; and

(4) Any facility where any record or other document relating to any of the above is located.

(b) Upon admission to any facility referred to in paragraph (a) of this section, EPA Enforcement Officers may:

(1) Inspect and monitor any part or aspect of vehicle manufacturer, assembly, storage, testing and other procedures, and the facilities in which these procedures are conducted;

(2) Inspect and monitor any part or aspect of vehicle test procedures or activities, including, but not limited to, vehicle selection, preparation, mileage accumulation, preconditioning, emission tests, and maintenance; and verify calibration of test equipment;

(3) Inspect and make copies of any records or documents related to the assembly, storage, selection and testing of a vehicle in compliance with a test order; and

(4) Inspect and photograph any part or aspect of any vehicle and any component used in its assembly that is reasonably related to the purpose of the entry.

(c) EPA Enforcement Officers may obtain reasonable assistance without cost from those in charge of a facility to help them perform any function listed in this subpart and may request the recipient of a test order to arrange with those in charge of a facility operated for its benefit to furnish reasonable assistance without cost to EPA whether or not the recipient controls the facility.

(d) EPA Enforcement Officers may seek a warrant or court order authorizing the EPA Enforcement Officers to conduct activities related to entry and access as authorized in this section. EPA Enforcement Officers may proceed ex parte to obtain a warrant whether or not the Enforcement Officers first sought permission from the recipient of the test order or the party in charge of the facilities in question to conduct those activities related to entry and access.

(e) A recipient of a test order shall permit EPA Enforcement Officers who present a warrant or court order as described in paragraph (d) of this section to conduct activities related to entry and access as authorized in this section and as described in the warrant or court order. A recipient of a test order shall cause those in charge of its facility or a facility operated for its benefit to permit EPA Enforcement Officers to conduct these activities related to entry and access pursuant to a warrant or court order whether or not the recipient controls the facility. In the absence of such a warrant or court order, EPA Enforcement Officers may conduct those activities related to entry and access only upon the consent of either the recipient of the test order or the party in charge of the facilities in question.

(f) It is not a violation of this part or the Clean Air Act for any person to refuse to permit EPA Enforcement Officers to conduct activities related to entry and access as authorized in this section without a warrant or court order.

(g) A manufacturer is responsible for locating its foreign testing and manufacturing facilities in jurisdictions in which local foreign law does not prohibit EPA Enforcement Officers from conducting the entry and access activities specified in this section. EPA will not attempt to make any inspections which it has been informed that local foreign law prohibits.

(h) For purposes of this section:

(1) *Presentation of Credentials* means display of the document designating a person as an EPA Enforcement Officer.

(2) Where vehicle storage areas or facilities are concerned, *operating hours* means all times during which personnel other than custodial personnel are at work in the vicinity of the area or facility and have access to it.

(3) Where facilities or areas other than those covered by paragraph (h)(2) of this section are concerned, *operating hours* means all times during which an assembly line is in operation, vehicle assembly is occurring, or testing, repair, mileage accumulation, production or compilation of records, or any other procedure or activity related to testing, or to vehicle manufacture or assembly, is being conducted in a facility.

(4) *Reasonable assistance* includes, but is not limited to, providing clerical,

copying, interpreting and translating services and, at the request of an EPA Enforcement Officer, making available personnel of the facility being inspected during their working hours to provide information relevant to the Enforcement Officer's activities authorized in this section. Any employee whom a manufacturer has instructed to appear at the request of an Enforcement Officer may be accompanied, represented, and advised by counsel.

[41 FR 31483, July 28, 1976, as amended at 49 FR 48481, Dec. 12, 1984. Redesignated at 54 FR 2123, Jan. 19, 1989]

§ 86.607–84 Sample selection.

(a) Vehicles comprising a test sample which are required to be tested, pursuant to a test order issued in accordance with this subpart, will be selected at the location and in the manner specified in the test order. If a manufacturer determines that the test vehicles cannot be selected in the manner specified in the test order, an alternative selection procedure may be employed: *Provided*, That the manufacturer requests approval of the alternative procedure in advance of the start of test sample selection and that the Administrator approves the procedure. Special order vehicles are exempt from sample selection unless a test sample cannot be completed otherwise.

(b) The manufacturer shall have assembled the test vehicles of the configuration selected for testing using its normal mass production processes for vehicles to be distributed into commerce. During the audit, the manufacturer shall inform the Administrator of any change(s) implemented in its production processes, including quality control, which may be reasonably expected to affect the emissions of the vehicles selected, between the time the manufacturer received the test order and the time the manufacturer finished selecting test vehicles.

(c) No quality control, testing, or assembly procedures will be used on the completed test vehicles or any portion thereof, including parts and subassemblies, that has not been or will not be used during the production and assembly of all other vehicles of that configuration.

(d) The test order may specify that EPA Enforcement Officers, rather than the manufacturer, will select the test vehicles according to the method described in paragraph (a) of this section.

(e) The order in which test vehicles are selected determines the order in which test results are to be used in applying the sampling plan in accordance with § 86.610.

(f) The manufacturer shall keep on hand all untested vehicles, if any, comprising the test sample until a pass or fail decision is reached in accordance with paragraph (d) of § 86.610. The manufacturer may ship any tested vehicle which has not failed in accordance with paragraph (a) of § 86.610. However, once a manufacturer ships any vehicle from the test sample, it relinquishes the prerogative to conduct retests provided in paragraph (i) of § 86.608.

[49 FR 48482, Dec. 12, 1984. Redesignated at 54 FR 2123, Jan. 19, 1989]

§ 86.608–98 Test procedures.

(a) The prescribed test procedures are the Federal Test Procedure, as described in subpart B of this part, and the cold temperature CO test procedure as described in subpart C of this part. For purposes of Selective Enforcement Audit testing, the manufacturer shall not be required to perform any of the test procedures in subpart B of this part relating to evaporative emission testing, other than refueling emissions testing, except as specified in paragraph (a)(2) of this section.

(1) The Administrator may omit any of the testing procedures described in paragraph (a) of this section. Further, the Administrator may, on the basis of a written application by a manufacturer, approve optional test procedures other than those in subparts B and C of this part for any motor vehicle which is not susceptible to satisfactory testing using the procedures in subparts B and C of this part.

(2) The following exceptions to the test procedures in subpart B of this part are applicable to Selective Enforcement Audit testing:

(i) For mileage accumulation, the manufacturer may use test fuel meeting the specifications for mileage and service accumulation fuels of § 86.113. Otherwise, the manufacturer may use

fuels other than those specified in this section only with the advance approval of the Administrator.

(ii) The manufacturer may measure the temperature of the test fuel at other than the approximate mid-volume of the fuel tank, as specified in § 86.131–96(a) with only a single temperature sensor, and may drain the test fuel from other than the lowest point of the tank, as specified in §§ 86.131–96(b) and 86.152–98(a), provided an equivalent method is used. Equivalency documentation shall be maintained by the manufacturers and shall be made available to the Administrator upon request. Additionally, for any test vehicle that has remained under laboratory ambient temperature conditions for at least 6 hours prior to testing, the vehicle soak described in § 86.132–96(c) may be eliminated upon approval of the Administrator. In such cases, the vehicle shall be operated through the preconditioning drive described in § 86.132–96(c) immediately following the fuel drain and fill procedure described in § 86.132–96(b).

(iii) The manufacturer may perform additional preconditioning on Selective Enforcement Audit test vehicles other than the preconditioning specified in § 86.132 only if the additional preconditioning was performed on certification test vehicles of the same configuration.

(iv) [Reserved]

(v) The manufacturer may substitute slave tires for the drive wheel tires on the vehicle as specified in § 86.135–90(e): Provided, that the slave tires are the same size.

(vi) [Reserved]

(vii) In performing exhaust sample analysis under § 86.140–94.

(A) When testing diesel vehicles, or methanol-fueled Otto-cycle vehicles, the manufacturer shall allow a minimum of 20 minutes warm-up for the HC analyzer, and for diesel vehicles, a minimum of two hours warm-up for the CO, CO2 and NO_X analyzers. (Power is normally left on infrared and chemiluminescent analyzers. When not in use, the chopper motors of the infrared analyzers are turned off and the phototube high voltage supply to the chemiluminescent analyzers is placed in the standby position.)

(B) The manufacturer shall exercise care to prevent moisture from condensing in the sample collection bags.

(viii) The manufacturer need not comply with § 86.142 or § 86.155, since the records required therein are provided under other provisions of this subpart G.

(ix) If a manufacturer elects to perform the background determination procedure described in paragraph (a)(2)(xi) of this section in addition to performing the refueling emissions test procedure, the elapsed time between the initial and final FID readings shall be recorded, rounded to the nearest second rather than minute as described in § 86.154–98(e)(8). In addition, the vehicle soak described in § 86.153–98(e) shall be conducted with the windows and luggage compartment of the vehicle open.

(x) The Administrator may elect to perform a seal test, described in § 86.153–98(b), of both integrated and non-integrated systems instead of the full refueling test. When testing non-integrated systems, a manufacturer may conduct the canister purge described in § 86.153–98(b)(1) directly following the preconditioning drive described in § 86.132–96(e) or directly following the exhaust emissions test described in § 86.137–96.

(xi) In addition to the refueling test, a manufacturer may elect to perform the following background emissions determination immediately prior to the refueling measurement procedure described in § 86.154, provided EPA is notified of this decision prior to the start of testing in an SEA.

(A) The SHED shall be purged for several minutes immediately prior to the background determination. Warning: If at any time the concentration of hydrocarbons, of methanol, or of methanol and hydrocarbons exceeds 15,000 ppm C, the enclosure should be immediately purged. This concentration provides a 4:1 safety factor against the lean flammability limit.

(B) The FID (or HFID) hydrocarbon analyzer shall be zeroed and spanned immediately prior to the background determination. If not already on, the enclosure mixing fan and the spilled fuel mixing blower shall be turned on at this time.

(C) Place the vehicle in the SHED. The ambient temperature level encountered by the test vehicle during the entire background emissions determination shall be 80 °F ±3 °F. The windows and luggage compartment of the vehicle must be open and the gas cap must be secured.

(D) Seal the SHED. Immediately analyze the ambient concentration of hydrocarbons in the SHED and record. This is the initial background hydrocarbon concentration.

(E) Soak the vehicle for ten minutes ±1 minute.

(F) The FID (or HFID) hydrocarbon analyzer shall be zeroed and spanned immediately prior to the end of the background determination.

(G) Analyze the ambient concentration of hydrocarbons in the SHED and record. This is the final background hydrocarbon concentration.

(H) The total hydrocarbon mass emitted during the background determination is calculated according to § 86.156. To obtain a per-minute background emission rate, divide the total hydrocarbon mass calculated in this paragraph by the duration of the soak, rounded to the nearest second, described in paragraph (a)(2)(xi)(G) of this section.

(I) The background emission rate is multiplied by the duration of the refueling measurement obtained in paragraph (a)(2)(ix) of this section. This number is then subtracted from the total grams of emissions calculated for the refueling test according to § 86.156–98(a) to obtain the adjusted value for total refueling emissions. The final results for comparison with the refueling emission standard shall be computed by dividing the adjusted value for total refueling mass emissions by the total gallons of fuel dispensed in the refueling test as described in § 86.156–98(b).

(xii) In addition to the requirements of subpart B of this part, the manufacturer shall prepare gasoline-fueled and methanol-fueled vehicles as follows prior to emission testing:

(A) The manufacturer shall inspect the fuel system to ensure the absence of any leaks of liquid or vapor to the atmosphere by applying a pressure of 14.5±0.5 inches of water (3.6±0.1 kPa) to the fuel system, allowing the pressure to stabilize, and isolating the fuel system from the pressure source. Following isolation of the fuel system, pressure must not drop more than 2.0 inches of water (0.5 kPa) in five minutes. If required, the manufacturer shall perform corrective action in accordance with paragraph (d) of this section and report this action in accordance with § 86.609–98(d).

(B) When performing this pressure check, the manufacturer shall exercise care to neither purge nor load the evaporative or refueling emission control systems.

(C) The manufacturer may not modify the test vehicle's evaporative or refueling emission control systems by component addition, deletion, or substitution, except to comply with paragraph (a)(2)(ii) of this section if approved in advance by the Administrator.

(3) The following exceptions to the test procedures in subpart C of this part are applicable to Selective Enforcement Audit testing:

(i) The manufacturer may measure the temperature of the test fuel at other than the approximate mid-volume of the fuel tank, as specified in § 86.107–96(e), and may drain the test fuel from other than the lowest point of the fuel tank, provided an equivalent method is used. Equivalency documentation shall be maintained by the manufacturer and shall be made available to the Administrator upon request.

(ii) In performing exhaust sample analysis under § 86.140, the manufacturer shall exercise care to prevent moisture from condensing in the sample collection bags.

(iii) The manufacturer need not comply with § 86.142 since the records required therein are provided under other provisions of this subpart G.

(iv) In addition to the requirements of subpart C of this part, the manufacturer shall prepare gasoline-fueled vehicles as follows prior to exhaust emission testing:

(A) The manufacturer shall inspect the fuel system to ensure the absence of any leaks of liquid or vapor to the atmosphere by applying a pressure of 14.5±0.5 inches of water (3.6±0.1 kPa) to the fuel system allowing the pressure

to stabilize and isolating the fuel system from the pressure source. Following isolation of the fuel system, pressure must not drop more than 2.0 inches of water (0.5 kPa) in five minutes. If required, the manufacturer shall perform corrective action in accordance with paragraph (d) of this section and report this action in accordance with § 86.609–98(d).

(B) When performing this pressure check, the manufacturer shall exercise care to neither purge nor load the evaporative or refueling emission control system.

(C) The manufacturer shall not modify the test vehicle's evaporative or refueling emission control system by component addition, deletion, or substitution, except if approved in advance by the Administrator, to comply with paragraph (a)(3)(i) of this section.

(b)(1) The manufacturer shall not adjust, repair, prepare, or modify the vehicles selected for testing and shall not perform any emission tests on vehicles selected for testing pursuant to the test order unless this adjustment repair, preparation, modification, and/or tests are documented in the manufacturer's vehicle assembly and inspection procedures and are actually performed or unless these adjustments and/or tests are required or permitted under this subpart or are approved in advance by the Administrator.

(2) For 1981 and later model years the Administrator may adjust or cause to be adjusted any engine or vehicle parameter which the Administrator has determined to be subject to adjustment for new vehicle compliance testing (e.g., for certification or Selective Enforcement Audit testing) in accordance with § 86.081–22(c)(1), to any setting within the physically adjustable range of that parameter, as determined by the Administrator in accordance with § 86.081–22(e)(3)(ii), prior to the performance of any tests. However, if the idle speed parameter is one which the Administrator has determined to be subject to adjustment, the Administrator shall not adjust it to a setting which causes a lower engine idle speed than will be possible within the physically adjustable range of the idle speed parameter on the vehicle when it has accumulated 4,000 miles, all other parameters being adjusted identically for the purpose of comparison. The Administrator, in making or specifying such adjustments, will consider the effect of the deviation from the manufacturer's recommended setting on emissions performance characteristics as well as the likelihood that similar settings will occur on in-use light-duty vehicles or light-duty trucks. In determining likelihood, the Administrator will consider factors such as, but not limited to, the effect of the adjustment on vehicle performance characteristics and surveillance information from similar in-use vehicles.

(c) Prior to performing emission testing pursuant to paragraph (a) of this section on an SEA test vehicle, the manufacturer may accumulate on each vehicle a number of miles equal to the greater of 4,000 miles, or the number of miles the manufacturer accumulated during certification on the emission-data vehicle corresponding to the configuration specified in the test order.

(1) Mileage accumulation must be performed in any manner using good engineering judgment to obtain emission results representative of normal production vehicles. This mileage accumulation must be consistent with the new vehicle break-in instructions contained in the applicable vehicle owner's manual, if any.

(2) The manufacturer shall accumulate mileage at a minimum rate of 300 miles per vehicle during each 24-hour period, unless otherwise provided by the Administrator.

(i) The first 24-hour period for mileage accumulation shall begin as soon as authorized vehicle checks, inspections and preparations are completed on each vehicle.

(ii) The minimum mileage accumulation rate does not apply on weekends or holidays.

(iii) If the manufacturer's mileage accumulation target is less than the minimum rate specified (300 miles per day), then the minimum daily accumulation rate shall be equal to the manufacturer's mileage accumulation target.

(3) Mileage accumulation shall be completed on a sufficient number of test vehicles during consecutive 24-hour periods to assure that the number

of vehicles tested per day fulfills the requirements of paragraph (g) of this section.

(d) The manufacturer shall not perform any maintenance on test vehicles after selection for testing nor shall the Administrator allow deletion of any test vehicle from the test sequence, unless requested by the manufacturer and approved by the Administrator before any test vehicle maintenance of deletion.

(e) The manufacturer will be allowed 24 hours to ship test vehicles from the assembly plant or storage facility to the test facility if the test facility is not located at the plant or storage facility or in close proximity to the plant or storage facility: Except, that the Administrator may approve more time based upon a request by the manufacturer accompanied by a satisfactory justification.

(f) If a vehicle cannot complete the mileage accumulation or emission tests because of vehicle malfunction, the manufacturer may request the Administrator to authorize the repair of that vehicle or its deletion from the test sequence.

(g) Whenever the manufacturer conducts testing pursuant to a test order issued under this subpart, the manufacturer shall notify the Administrator within one working day of receipt of the test order, which test facility will be used to comply with the test order and the number of available test cells at that facility. If no test cells are available at the desired facility, the manufacturer must provide alternate testing capability satisfactory to the Administrator.

(1) The manufacturer shall perform a combination of tests pursuant to paragraph (a) of this section so that a minimum of four tests are performed per 24 hour period, including voided tests, for each available test cell.

(2) The Administrator may approve a longer period based upon a request by a manufacturer accompanied by satisfactory justification.

(h) The manufacturer shall perform test vehicle selection, preparation, mileage accumulation, shipping, and testing in such a manner as to assure that the audit is performed in an expeditious manner.

(i) The manufacturer may retest any test vehicle after a fail decision has been reached in accordance with § 86.610–98(d) based on the first test on each vehicle; except that the Administrator may approve retests at other times during the audit based upon a request by the manufacturer accompanied by a satisfactory justification. The manufacturer may test each vehicle a total of three times. The manufacturer shall test each vehicle the same number of times. The manufacturer may accumulate additional mileage on test vehicles before conducting retests, subject to the provisions of paragraph (c) of this section.

[59 FR 16301, Apr. 6, 1994, as amended at 60 FR 43898, Aug. 23, 1995; 62 FR 31235, June 6, 1997; 79 FR 23700, Apr. 28, 2014]

§ 86.609–98 Calculation and reporting of test results.

(a) Initial test results are calculated following the test procedures specified in § 86.608–98(a). Round the initial test results to the number of decimal places contained in the applicable emission standard expressed to one additional significant figure.

(b) Final test results for each test vehicle are calculated by summing the initial test results derived in paragraph (a) of this section for each test vehicle, dividing by the number of times that specific test has been conducted on the vehicle, and rounding to the same number of decimal places contained in the applicable standard expressed to one additional significant figure.

(c) *Final deteriorated test results.* (1) *For each test vehicle.* The final deteriorated test results for each light-duty vehicle tested for exhaust emissions and/or refueling emissions according to subpart B, subpart C, or subpart R of this part are calculated by first multiplying or adding, as appropriate, the final test results by or to the appropriate deterioration factor derived from the certification process for the engine or evaporative/refueling family and model year to which the selected configuration belongs, and then by multiplying by the appropriate reactivity adjustment factor, if applicable, and rounding to the same number of

decimal places contained in the applicable emission standard. For the purpose of this paragraph (c), if a multiplicative deterioration factor as computed during the certification process is less than one, that deterioration factor is one. If an additive deterioration factor as computed during the certification process is less than zero, that deterioration factor will be zero.

(2) *Exceptions*. There are no deterioration factors for light-duty vehicle emissions obtained during spitback testing in accordance with § 86.146. Accordingly, for the fuel dispensing spitback test, the term ''final deteriorated test results'' means the final test results derived in paragraph (b) of this section for each test vehicle, rounded to the same number of decimal places contained in the applicable emission standard.

(d) Within five working days after completion of testing of all vehicles pursuant to a test order, the manufacturer shall submit to the Administrator a report which includes the following information:

(1) The location and description of the manufacturer's emission test facilities which were utilized to conduct testing reported pursuant to this section.

(2) The applicable standards against which the vehicles were tested.

(3) Deterioration factors for the selected configuration.

(4) A description of the vehicle selection method used.

(5) For each test conducted.

(i) Test vehicle description including:

(A) Configuration, engine family, and refueling family identification.

(B) Year, make, build date, and model of vehicle.

(C) Vehicle Identification Number.

(D) Miles accumulated on vehicle.

(ii) Location where mileage accumulation was conducted and description of accumulation schedule.

(iii) Test number, date initial test results, final results and final deteriorated test results for all valid and invalid exhaust emission tests, and the reason for invalidation.

(iv) A complete description of any modification, repair, preparation, maintenance and/or testing which was performed on the test vehicle and:

(A) Has not been reported pursuant to any other paragraph of this subpart; and

(B) Will not be performed on all other production vehicles.

(v) Carbon dioxide emission values for all valid and invalid exhaust emission tests.

(vi) Where a vehicle was deleted from the test sequence by authorization of the Administrator, the reason for the deletion.

(vii) Any other information the Administrator may request relevant to the determination as to whether the new motor vehicles being manufactured by the manufacturer do in fact conform with the regulations with respect to which the certificate of conformity was issued.

(6) The following statement and endorsement:

This report is submitted pursuant to sections 206 and 208 of the Clean Air Act. This Selective Enforcement Audit was conducted in complete conformance with all applicable regulations under 40 CFR part 86 and the conditions of the test order. No emission related change(s) to production processes or quality control procedures for the vehicle configuration tested have been made between receipt of this test order and conclusion of the audit. All data and information reported herein is, to the best of

_____

(Company Name)

knowledge, true and accurate. I am aware of the penalties associated with violations of the Clean Air Act and the regulations thereunder.

_____

(Authorized Company Representative)

[59 FR 16303, Apr. 6, 1994, as amended at 62 FR 31236, June 6, 1997; 79 FR 23701, Apr. 28, 2014]

§ 86.610–98 Compliance with acceptable quality level and passing and failing criteria for Selective Enforcement Audits.

(a) The prescribed acceptable quality level is 40 percent.

(b) A failed vehicle is one whose final deteriorated test results pursuant to § 86.609–98(c) exceed at least one of the applicable emission standards associated with the test procedures pursuant to § 86.608–98(a).

(c)(1) *Pass/fail criteria*. The manufacturer shall test vehicles comprising the

test sample until a pass decision is reached for all of the pollutants associated with all of the test procedures pursuant to § 86.608–98(a) or a fail decision is reached for one of these pollutants. A pass decision is reached when the cumulative number of failed vehicles, as defined in paragraph (b) of this section, for each pollutant is less than or equal to the fail decision number appropriate to the cumulative number of vehicles tested. A fail decision is reached when the cumulative number of failed vehicles for one pollutant is greater than or equal to the fail decision number appropriate to the cumulative number of vehicles tested. The pass and fail decision numbers associated with the cumulative number of vehicles tested are determined by use of the tables in appendix XI of this part appropriate for the annual projected sales as made by the manufacturer in its report submitted under § 600.207–80(a)(2) of this chapter (Automobile Fuel Economy Regulations). In the tables in appendix XI of this part, sampling plan ''stage'' refers to the cumulative number of vehicles tested. Once a pass decision has been made for a particular pollutant associated with a particular test procedure pursuant to § 86.608–98(a), the number of vehicles whose final deteriorated test results exceed the emission standard for that pollutant may not be considered any further for purposes of the audit.

(2) [Reserved]

(d) Passing or failing of an SEA audit occurs when the decision is made on the last vehicle required to make a decision under paragraph (c) of this section.

(e) The Administrator may terminate testing earlier than required in paragraph (c) of this section.

[59 FR 16304, Apr. 6, 1994, as amended at 79 FR 23702, Apr. 28, 2014]

§ 86.612–97 Suspension and revocation of certificates of conformity.

(a) The certificate of conformity is immediately suspended with respect to any vehicle failing pursuant to § 86.610–98(b) effective from the time that testing of that vehicle is completed.

(b) The Administrator may suspend the certificate of conformity for a configuration that does not pass a selective enforcement audit pursuant to § 86.610–98(c) based on the first test, or all tests, conducted on each vehicle. This suspension will not occur before ten days after failure to pass the audit.

(c) If the results of vehicle testing pursuant to the requirements of this subpart indicate the vehicles of a particular configuration produced at more than one plant do not conform to the regulations with respect to which the certificate of conformity was issued, the Administrator may suspend the certificate of conformity with respect to that configuration for vehicles manufactured by the manufacturer in other plants of the manufacturer.

(d) The Administrator will notify the manufacturer in writing of any suspension or revocation of a certificate of conformity in whole or in part: Except, that the certificate of conformity is immediately suspended with respect to any vehicle failing pursuant to § 86.610–98(b) and as provided for in paragraph (a) of this section.

(e) The Administrator may revoke a certificate of conformity for a configuration when the certificate has been suspended pursuant to paragraph (b) or (c) of this section if the proposed remedy for the nonconformity, as reported by the manufacturer to the Administrator, is one requiring a design change(s) to the engine and/or emission control system as described in the Application for Certification of the affected configuration.

(f) Once a certificate has been suspended for a failed vehicle as provided for in paragraph (a) of this section, the manufacturer must take the following actions:

(1) Before the certificate is reinstated for that failed vehicle—

(i) Remedy the nonconformity; and

(ii) Demonstrate that the vehicle's final deteriorated test results conform to the applicable emission standards or family particulate emission limits, as defined in this part 86 by retesting the vehicle in accordance with the requirements of this subpart.

(2) Submit a written report to the Administrator within thirty days after successful completion of testing on the failed vehicle, which contains a description of the remedy and test results

for the vehicle in addition to other information that may be required by this subpart.

(g) Once a certificate has been suspended pursuant to paragraph (b) or (c) of this section, the manufacturer must take the following actions before the Administrator will consider reinstating such certificate:

(1) Submit a written report to the Administrator which identifies the reason for the noncompliance of the vehicles, describes the proposed remedy, including a description of any proposed quality control and/or quality assurance measures to be taken by the manufacturer to prevent the future occurrence of the problem, and states the date on which the remedies will be implemented.

(2) Demonstrate that the engine family or configuration for which the certificate of conformity has been suspended does in fact comply with the requirements of this subpart by testing vehicles selected from normal production runs of that engine family or configuration at the plant(s) or the facilities specified by the Administrator, in accordance with: the conditions specified in the initial test order pursuant to § 86.603 for a configuration suspended pursuant to paragraph (b) or (c) of this section.

(3) If the Administrator has not revoked the certificate pursuant to paragraph (e) of this section and if the manufacturer elects to continue testing individual vehicles after suspension of a certificate, the certificate is reinstated for any vehicle actually determined to have its final deteriorated test results in conformance with the applicable standards through testing in accordance with the applicable test procedures.

(h) Once a certificate for a failed engine family or configuration has been revoked under paragraph (e) of this section and the manufacturer desires to introduce into commerce a modified version of that engine family or configuration, the following actions will be taken before the Administrator may issue a certificate for the new engine family or configuration:

(1) If the Administrator determines that the proposed change(s) in vehicle design may have an effect on emission performance deterioration and/or fuel economy, he/she shall notify the manufacturer within five working days after receipt of the report in paragraph (g)(1) of this section whether subsequent testing under this subpart will be sufficient to evaluate the proposed change(s) or whether additional testing will be required.

(2) After implementing the change(s) intended to remedy the nonconformity, the manufacturer shall demonstrate, if the certificate was revoked pursuant to paragraph (e) of this section, that the modified vehicle configuration does in fact conform with the requirements of this subpart by testing vehicles selected from normal production runs of that modified vehicle configuration in accordance with the conditions specified in the initial test order pursuant to § 86.603. The Administrator shall consider this testing to satisfy the testing requirements of § 86.079–32 or § 86.079–33 if the Administrator had so notified the manufacturer. If the subsequent testing results in a pass decision pursuant to the criteria in § 86.610–98(c), the Administrator shall reissue or amend the certificate, if necessary, to include that configuration: *Provided*, that the manufacturer has satisfied the testing requirements specified in paragraph (h)(1) of this section. If the subsequent audit results in a fail decision pursuant to the criteria in § 86.610–98(c), the revocation remains in effect. Any design change approvals under this subpart are limited to the modification of the configuration specified by the test order.

(i) A manufacturer may at any time subsequent to an initial suspension of a certificate of conformity with respect to a test vehicle pursuant to paragraph (a) of this section, but not later than fifteen (15) days or such other period as may be allowed by the Administrator after notification of the Administrator's decision to suspend or revoke a certificate of conformity in whole or in part pursuant to paragraph (b), (c) or (e) of this section, request that the Administrator grant such manufacturer a hearing as to whether the tests have been properly conducted or any sampling methods have been properly applied.

(j) After the Administrator suspends or revokes a certificate of conformity pursuant to this section or notifies a manufacturer of his intent to suspend, revoke or void a certificate of conformity under § 86.007–30(e) or § 86.1850, and prior to the commencement of a hearing under § 86.614, if the manufacturer demonstrates to the Administrator's satisfaction that the decision to suspend, revoke or void the certificate was based on erroneous information, the Administrator shall reinstate the certificate.

(k) To permit a manufacturer to avoid storing non-test vehicles when conducting testing of an engine family or configuration subsequent to suspension or revocation of the certificate of conformity for that engine family or configuration pursuant to paragraph (b), (c), or (e) of this section, the manufacturer may request that the Administrator conditionally reinstate the certificate for that engine family or configuration. The Administrator may reinstate the certificate subject to the condition that the manufacturer consents to recall all vehicles of that engine family or configuration produced from the time the certificate is conditionally reinstated if the engine family or configuration fails the subsequent testing and to remedy any nonconformity at no expense to the owner.

[79 FR 23702, Apr. 28, 2014]

§ 86.614–84 Hearings on suspension, revocation, and voiding of certificates of conformity.

The provisions of 40 CFR part 1068, subpart G, apply if a manufacturer requests a hearing regarding suspension, revocation or voiding of certificates of conformity.

[81 FR 73980, Oct. 25, 2016]

§ 86.615–84 Treatment of confidential information.

The provisions of 40 CFR 1068.10 apply for information you consider confidential.

[81 FR 73980, Oct. 25, 2016]

Subpart H [Reserved]

Subpart I—Emission Regulations for New Diesel Heavy-Duty Engines; Smoke Exhaust Test Procedure

AUTHORITY: Secs. 202, 206, 207, 208, 301(a), Clean Air Act; as amended 42 U.S.C. 7521, 7524, 7541, 7542, and 7601.

SOURCE: 48 FR 52203, Nov. 16, 1983, unless otherwise noted.

§ 86.884–1 General applicability.

The provisions of this subpart are applicable to new petroleum-fueled diesel heavy-duty engines beginning with the 1984 model year, methanol-fueled diesel heavy-duty engines beginning with the 1990 model year and natural gas-fueled and liquefied petroleum gas-fueled diesel heavy-duty engines beginning with the 1997 model year. The provisions of this subpart are optional prior to the 1997 model year for natural gas-fueled and liquefied petroleum gas-fueled diesel heavy-duty engines.

[59 FR 48521, Sept. 21, 1994]

§ 86.884–2 Definitions.

The definitions in § 86.084–2 apply to this subpart.

§ 86.884–3 Abbreviations.

The abbreviations in § 86.078–3 apply to this subpart.

§ 86.884–4 Section numbering.

The section numbering system set forth in § 86.084–4 applies to this subpart.

[48 FR 52203, Nov. 16, 1983, as amended at 59 FR 48521, Sept. 21, 1994]

§ 86.884–5 Test procedures.

The procedures described in this and subsequent sections will be the test program to determine the conformity of engines with the standards set forth in § 86.084–11(b).

(a) The test consists of a prescribed sequence of engine operating conditions on an engine dynamometer with continuous examination of the exhaust gases. The test is applicable equally to controlled engines equipped with means for preventing, controlling, or eliminating smoke emissions and to uncontrolled engines.

(b) The test is designed to determine the opacity of smoke in exhaust emissions during those engine operating conditions which tend to promote smoke from diesel vehicles.

(c) The test procedure begins with a preconditioned engine which is then run through preloading and preconditioning operations. After an idling period, the engine is operated through acceleration and lugging modes during which smoke emission measurements are made to compare with the standards. The engine is then returned to the idle condition and the acceleration and lugging modes are repeated. Three consecutive sequences of acceleration and lugging constitutes the full set of operating conditions for smoke emission measurement.

(d)(1) Except in cases of component mulfunction or failure, all emission control systems installed on, or incorporated in, a new motor vehicle engine shall be functioning during all procedures in this subpart.

(2) Maintenance to correct component malfunction or failure shall be authorized in accordance with § 86.084–25.

[48 FR 52203, Nov. 16, 1983, as amended at 49 FR 48140, Dec. 10, 1984; 54 FR 14559, Apr. 11, 1989]

§ 86.884–6 Fuel specifications.

The requirements of this section are set forth in § 86.1313.

[54 FR 14559, Apr. 11, 1989]

§ 86.884–7 Dynamometer operation cycle for smoke emission tests.

(a) The following sequence of operations shall be performed during engine dynamometer testing of smoke emissions, starting with the dynamometer preloading determined and the engine preconditioned (§ 86.884–12(c)).

(1) *Idle Mode*. The engine is caused to idle for 5.0 to 5.5 minutes at the manufacturer's recommended curb idle speed. The dynamometer controls shall be set to provide the speed and load necessary to comply with the heavy-duty ''curb idle'' definition per § 86.084–2, in accordance with predominant engine application.

(2) *Acceleration mode*. (i) The engine speed shall be increased to 200 ±50 rpm above the measured free idle speed measured at the point where the throttle begins to move from part-throttle to the full throttle position. The speed anywhere during this mode should not exceed this checkpoint speed by more than 50 rpm. The duration of this first acceleration shall be three seconds or less measured from the point where the speed first begins to increase above idle to the point where the throttle reaches full open position.

(ii) Immediately upon completion of the mode specified in paragraph (a)(2)(i) of this section, the throttle shall be moved rapidly to, and held in, the fully open position. The inertia of the engine and the dynamometer, or alternately a preselected dynamometer load, shall be used to control the acceleration of the engine so that the speed increases to 85 percent of the rated speed in 5 ±1.5 seconds. This acceleration shall be linear within 100 rpm as specified in § 86.884–13(c).

(iii) After the engine reaches the speed required in paragraph (a)(2)(ii) of this section the throttle shall be moved rapidly to, and held in, the fully closed position. Immediately after the throttle is closed, the preselected load required to perform the acceleration in paragraph (a)(2)(iv) of this section shall be applied. For electric motoring dynamometer operation in speed mode, the deceleration shall be performed in 2±1.5 seconds.

(iv) When the engine decelerates to the intermediate speed (within 50 rpm), the throttle shall be moved rapidly to, and held in, the fully open position. The preselected dynamometer load which was applied during the preceding transition period shall be used to control the acceleration of the engine so that the speed increases to at least 95 percent of the rated speed in 10 ±2 seconds.

(v) For electric dynamometer operation in speed mode, motoring assist may be used to offset excessive dynamometer inertia load when necessary. No negative flywheel torque shall occur during any of the three acceleration modes in paragraph (a)(2) of this section except for a maximum of 10ft-lbs. for the first 0.5 second of the mode.

(3) *Lugging mode*. (i) Immediately upon the completion of the preceding acceleration mode, the dynamometer

controls shall be adjusted to permit the engine to develop maximum horsepower at rated speed. This transition period shall be 50 to 60 seconds in duration. During the last 10 seconds of this period, the average engine speed shall be maintained within 50 rpm of the rated speed, and the average observed power (corrected, if necessary, to rating conditions) shall be no less than 95 percent of the maximum horsepower developed during the preconditioning prior to the smoke cycle.

(ii) With the throttle remaining in the fully open position, the dynamometer controls shall be adjusted gradually so that the engine speed is reduced to the intermediate speed. This lugging operation shall be performed smoothly over a period of 35#5 seconds. The rate of slowing of the engine shall be linear, within 100 rpm, as specified in § 86.884–13(c).

(4) *Engine unloading*. Within five seconds of completing the preceding lugging mode, the dynamometer and engine controls shall be returned to the idle position described in paragraph (a)(1) of this section. The engine must be at free idle condition within one minute after completion of the lugging mode.

(b) The procedures described in paragraphs (a)(1) through (a)(4) of this section shall be repeated until three consecutive valid cycles have been completed. If three valid cycles have not been completed after a total of six consecutive cycles have been run, the engine shall be preconditioned by operation at maximum horsepower at rated speed for 10 minutes before the test sequence is repeated.

[48 FR 52203, Nov. 16, 1983, as amended at 49 FR 48141, Dec. 10, 1984; 52 FR 47870, Dec. 16, 1987; 62 FR 47122, Sept. 5, 1997]

§ 86.884–8 Dynamometer and engine equipment.

The following equipment shall be used for smoke emission testing of engines on engine dynamometers:

(a) An engine dynamometer with adequate characteristics to perform the test cycle described in § 86.884–7.

(b) An engine cooling system having sufficient capacity to maintain the engine at normal operating temperatures during conduct of the prescribed engine tests.

(c) An exhaust system with an appropriate type of smokemeter placed no more than 32 feet from the exhaust manifold(s), turbocharger outlet(s), exhaust aftertreatment device(s), or crossover junction (on Vee engines), whichever is farthest downstream. The smoke exhaust system shall present an exhaust backpressure within ±0.2 inch Hg of the upper limit at maximum rated horsepower, as established by the engine manufacturer in his sales and service literature for vehicle application. The following options may also be used:

(1) For engines with multiple exhaust outlets, join the exhaust outlets together into a single exhaust system and install the smokemeter 10 to 32 feet downstream from the junction of the individual exhaust outlets, or exhaust aftertreatment device(s), whichever is farthest downstream.

(2) For engines with multiple exhaust outlets, install a smokemeter in each of the exhaust pipes 10 to 32 feet downstream from each exhaust manifold, turbocharger outlet, or exhaust aftertreatment device, whichever is farthest downstream.

(3) For engines with multiple exhaust outlets, install a smokemeter on the exhaust pipe which produces the highest smoke levels 10 to 32 feet downstream from the exhaust manifold, turbocharger outlet, or exhaust aftertreatment device, whichever is farthest downstream. It may be required to make smoke measurements from other exhaust outlets if deemed appropriate by the Administrator.

(4) When utilizing an end-of-line smokemeter, the terminal two feet of the exhaust pipe used for smoke measurement shall be of a circular cross section and be free of elbows and bends. The end of the pipe shall be cut off squarely. The terminal two feet of the exhaust pipe shall have a nominal inside diameter in accordance with the engine being tested, as specified below:

Maximum rated horsepower	Exhaust pipe diameter (inches)
HP<50	1.5
50≤HP<100	2.0
100≤HP<200	3.0

Maximum rated horsepower	Exhaust pipe diameter (inches)
200≤HP<300	4.0
300≤HP<500	5.0
HP≥500	6.0

(5) When utilizing an in-line smokemeter, there shall be no change in the exhaust pipe diameter within 3 exhaust pipe diameters before or after the centerline of the smokemeter optics. Within 6 exhaust pipe diameters upstream of the centerline of the smokemeter optics, no change in exhaust pipe diameter may exceed a 12 degree half-angle.

(d) An engine air inlet system presenting an air inlet restriction within one inch of water of the upper limit for the engine operating condition which results in maximum air flow, as established by the engine manufacturer in his sales and service literature, for the engine being tested.

[48 FR 52203, Nov. 16, 1983, as amended at 62 FR 47122, Sept. 5, 1997; 63 FR 63967, Nov. 17, 1998; 70 FR 40437, July 13, 2005]

§ 86.884–9 Smoke measurement system.

(a) *Schematic drawing*. The Figure I84–1 is a schematic drawing of the optical system of the light extinction meter.

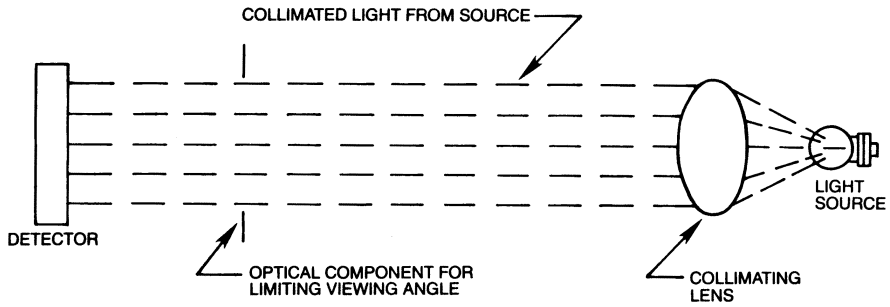

Figure I84-1 SMOKEMETER OPTICAL SYSTEM (SCHEMATIC)

(b) *Equipment*. The following equipment shall be used in the system.

(1) Adapter—the smokemeter optical unit may be mounted on a fixed or movable frame. The normal unrestricted shape of the exhaust plume shall not be modified by the adaptor, the meter, or any ventilatory system used to remove the exhaust from the test site.

(2) Smokemeter (light extinction meter)—continuous recording, full-flow light obscuration meter.

(i) It is positioned so that a built-in light beam traverses the exhaust smoke plume at right angles to the axis of the exhaust stream.

(ii) The smokemeter light source shall be an incandescent lamp with a color temperature range of 2800K to 3250K, or a light source with a spectral peak between 550 to 570 nanometers.

(iii) The light output is collimated to a beam with a maximum diameter of 1.125 inches and an included angle of divergence within a 6° included angle.

(iv) The light detector shall be a photocell or photodiode. If the light source is an incandescent lamp, the detector shall have a spectral response similar to the photopic curve of the human eye (a maximum response in the range of 550 to 570 nanometers, to less than 4 percent of that maximum response below 430 nanometers and above 680 nanometers).

(v) A collimating tube with apertures equal to the beam diameter is attached to the detector to restrict the viewing angle of the detector to within a 16° included angle.

(vi) An amplified signal corresponding to the amount of light

blocked is recorded continuously on a remote recorder.

(vii) An air curtain across the light source and detector window assemblies may be used to minimize deposition of smoke particles on those surfaces provided that it does not measurably affect the opacity of the plume.

(viii) The smokemeter consists of two units; an optical unit and a remote control unit.

(ix) Light extinction meters employing substantially identical measurement principles and producing substantially equivalent results, but which employ other electronic and optical techniques, may be used only after having been approved in advance by the Administrator.

(3) Recorder—a continuous recorder, with variable chart speed over a minimal range of 0.5 to 8.0 inches per minute (or equivalent) and an automatic marker indicating 1-second intervals continuously records the exhaust gas opacity, engine rpm and throttle position.

(i) The recorder is equipped to indicate only when the throttle is in the fully open or fully closed position.

(ii) The recorder scale for opacity is linear and calibrated to read from 0 to 100 percent opacity full scale.

(iii) The opacity trace has a resolution within one percent opacity.

(iv) The recorder scale for engine rpm is linear and has a resolution of 30 rpm.

(v) The throttle position trace clearly indicates when the throttle is in the fully open and fully closed positions.

(vi) Any means other than a strip-chart recorder may be used provided it produces a permanent visual data record of quality equal to or better than that described above (e.g., tabulated data, traces, or plots).

(4) The recorder used with the smokemeter shall be capable of full-scale deflection in 0.5 second or less. The smokemeter-recorder combination may be damped so that signals with a frequency higher than 10 cycles per second are attenuated. A separate lowpass electronic filter with the following performance characteristics may be installed between the smokemeter and the recorder to achieve the high-frequency attenuation:

(i) Three decibel point—10 cycles per second.

(ii) Insertion loss—zero ±0.5 decibel.

(iii) Selectivity—12 decibels per octave above 10 cycles per second.

(iv) Attenuation—27 decibels down at 40 cycles per second minimum.

(5) In lieu of the use of chart recorders, automatic data collection equipment may be used to record all required data. Automatic data processing equipment may then be used to perform the data analysis specified in § 86.884–13. The automatic data collection equipment must be capable of sampling at least two records per second.

(c) *Assembling equipment.* (1) The optical unit of the smokemeter shall be mounted radially to the exhaust pipe so that the measurement will be made at right angles to the axis of the exhaust plume. For an end-of-line smokemeter the distance from the optical centerline to the exhaust pipe outlet shall be 1 ±0.25 inch. The full flow of the exhaust stream shall be centered between the source and the detector apertures (or windows and lenses) and on the axis of the light beam.

(2) Power shall be supplied to the control unit of the smokemeter in time to allow at least 15 minutes for stabilization prior to testing.

[48 FR 52203, Nov. 16, 1983, as amended at 49 FR 48141, Dec. 10, 1984; 62 FR 47122, Sept. 5, 1997]

§ 86.884–10 Information.

The following information, as applicable, shall be recorded for each test:

(a) *Engine description and specifications.* A copy of the information specified in this paragraph must accompany each engine sent to the Administrator for compliance testing. If the engine is submitted to the Administrator for testing under subpart N of this part or 40 CFR part 1065, only the specified information need accompany the engine. The manufacturer need not record the information specified in this paragraph for each test if the information, with the exception of paragraphs (a)(3), (a)(12), and (a)(13) of this section, is included in the manufacturer's part I.

(1) Engine-system combination.

(2) Engine identification numbers.

(3) Number of hours of operation accumulated on engine.

(4) Rated maximum horsepower and torque.

(5) Maximum horsepower and torque speeds.

(6) Engine displacement.

(7) Governed speed.

(8) Idle rpm.

(9) Fuel consumption at maximum power and torque.

(10) Maximum air flow.

(11) Maximum and test air inlet restriction.

(12) Exhaust pipe diameter(s).

(13) Maximum exhaust system backpressure.

(b) *Test data; general.* This information may be recorded at any time between four hours prior to the test and four hours after the test.

(1) Engine-system combination.

(2) Engine identification numbers.

(3) Instrument operator.

(4) Engine operator.

(5) Number of hours of operation accumulated on the engine prior to beginning the warm-up portion of the test.

(6) Calibration date(s) of neutral density filters used to calibrate the smokemeter.

(c) Test data; pre-test.

(1) Date and time of day.

(2) Test number.

(3) Barometric pressure.

(4) [Reserved]

(5) Intake air humidity and temperature:

(i) *Humidity-conditioned air supply.* Air that has had its absolute humidity altered is considered humidity-conditioned air. For this type of intake air supply, the humidity measurement must be made within the intake air supply system, and after the humidity conditioning has taken place.

(ii) *Non-conditioned air supply.* Humidity measurements in non-conditioned intake air supply systems must be made in the intake air stream entering the supply system and within 18 inches of the inlet for supply system. Alternatively, the humidity measurements can be measured within the intake air supply stream.

(iii) Engine intake air temperature measurement must be made within 48 inches of the engine. The measurement location must be made either in the supply system or in the air stream entering the supply system.

(d) *Test data; modal.* (1) Observed engine torque and speed during the steady-state test conditions specified in § 86.884–7(a)(3)(i).

(2) On the recorder or automatic data collection equipment: Identify zero traces—calibration traces—idle traces (or printout of the zero and calibration values)—closed-throttle trace-open throttle trace—acceleration and lugdown test traces—start and finish of each test.

[48 FR 52203, Nov. 16, 1983, as amended at 49 FR 48141, Dec. 10, 1984; 62 FR 47123, Sept. 5, 1997; 70 FR 40437, July 13, 2005]

§ 86.884–11 Instrument checks.

(a) The smokemeter shall be checked according to the following procedure prior to each test:

(1) [Reserved]

(2) The zero control shall be adjusted under conditions of ''no smoke'' to give a recorder or data collection equipment response of zero;

(3) Calibrated neutral density filters having approximately 10, 20, and 40 percent opacity shall be employed to check the linearity of the instrument. The filter(s) shall be inserted in the light path perpendicular to the axis of the beam and adjacent to the opening from which the beam of light from the light source emanates, and the recorder response shall be noted. Filters with exposed filtering media should be checked for opacity every six months; all other filters shall be checked every year, using NBS or equivalent reference filters. Deviations in excess of 1 percent of the nominal opacity shall be corrected.

(b) The instruments for measuring and recording engine rpm, engine torque, air inlet restrictions, exhaust system backpressure, throttle position, etc., which are used in the test prescribed herein, shall be calibrated in accordance with good engineering practice.

[48 FR 52203, Nov. 16, 1983, as amended at 49 FR 48141, Dec. 10, 1984]

§ 86.884–12 Test run.

(a) The temperature of the air supplied to the engine shall be between 68 °F and 86 °F. The engine fuel inlet temperature shall be 100 °F ±10 °F and shall be measured at a point specified by the manufacturer. The observed barometric pressure shall be between 28.5 inches and 31 inches Hg. Higher air temperature or lower barometric pressure may be used, if desired, but no allowance will be made for possible increased smoke emissions because of such conditions.

(b) The governor and fuel system shall have been adjusted to provide engine performance at the levels in the application for certification required under § 86.084–21.

(c) The following steps shall be taken for each test:

(1) Start cooling system;

(2) Warm up the engine by the procedure described in 40 CFR 1065.530.

(3) Determine by experimentation the dynamometer inertia and dynamometer load required to perform the acceleration in the dynamometer cycle for smoke emission tests (§ 86.884–7(a)(2)). In a manner appropriate for the dynamometer and controls being used, arrange to conduct the acceleration mode;

(4) Install smokemeter optical unit and connect it to the recorder/data collection system. Connect the engine rpm and throttle position sensing devices to the recorder/data collection system;

(5) Turn on purge air to the optical unit of the smokemeter, if purge air is used;

(6) Check and record zero and span settings of the smokemeter. (If a recorder is used, a chart speed of approximately one inch per minute shall be used.) The optical unit shall be retracted from its position about the exhaust stream if the engine is left running;

(7) Precondition the engine by operating it for 10 minutes at maximum rated horsepower;

(8) Proceed with the sequence of smoke emission measurements on the engine dynamometer as prescribed in § 86.884–7;

(9)(i) During the test sequence of § 86.884–7, continuously record smoke measurements, engine rpm, and throttle position.

(ii) If a chart recorder is used for data collection, it shall be run at a minimum chart speed of one inch per minute during the idle mode and transitional periods, and eight inches per minute during the acceleration and lugging modes.

(iii) Automatic data collection equipment, if used, shall sample at least two records per second.

(iv) The smoke meter zero and full scale response may be rechecked and reset during the idle mode of each test sequence.

(v) If either zero or full-scale drift is in excess of 2 percent opacity, the smokemeter controls must be readjusted and the test must be repeated;

(10) Turn off engine;

(11)(i) Check zero and reset if necessary.

(ii) Check span response (linearity) of the smokemeter by inserting neutral density filters.

(iii) If either zero drift or the linearity check is in excess of two percent opacity, the results shall be invalidated.

[48 FR 52203, Nov. 16, 1983, as amended at 49 FR 48141, Dec. 10, 1984; 52 FR 47870, Dec. 16, 1987; 70 FR 40437, July 13, 2005]

§ 86.884–13 Data analysis.

The following procedure shall be used to analyze the test data:

(a) Locate the modes specified in § 86.884–7(a)(1) through (a)(4) by applying the following starting and ending criteria:

(1) The idle mode specified in § 86.884–7(a)(1) starts when engine preconditioning or the lugging mode of a preceding cycle has been completed and ends when the engine speed is raised above the idle speed.

(2) The acceleration mode specified in § 86.884–7(a)(2)(i) starts when the preceding idle mode has been completed and ends when the throttle is in the fully open position, as indicated by the throttle position trace as specified in § 86.884–7(a)(2)(ii).

(3) The acceleration mode specified in § 86.884–7(a)(2)(ii) starts when the preceding acceleration mode has been completed and ends when the engine

speed reaches 85 percent of the rated speed.

(4) The transition period specified in § 86.884–7(a)(2)(iii) starts when the preceding acceleration mode has been completed and ends when the throttle is in the fully open position as indicated by the throttle position trace, as specified in § 86.884–7(a)(2)(iv).

(5) The acceleration mode specified in § 86.884–7(a)(2)(iv) starts when the preceding transition period has been completed and ends when the engine speed reaches 95 percent of the rated speed.

(6) The transition period specified in § 86.884–7 (a)(3)(i) starts when the preceding acceleration mode has been completed and ends when the engine speed is 50 rpm below the rated speed and the provisions of § 86.884–7 (a)(3)(i) are met.

(7) The lugging mode specified in § 86.884–7(a)(3)(ii) starts when the preceding transition period has been completed and ends when the engine speed is at the intermediate speed.

(b) Determine if the test requirements of § 86.884–7 are met by applying the following modal criteria:

(1) Idle mode as specified in § 86.884–7(a)(1):

(i) Duration: 5 to 5.5 minutes.

(ii) Speed: within specification during the last four minutes of the mode.

(2) Acceleration mode as specified in § 86.884–7(a)(2)(i).

(i) Duration: three seconds or less.

(ii) Speed increase: 200±50 rpm.

(3) Acceleration mode as specified in § 86.884–7(a)(2)(ii);

(i) Linearity: ±100 rpm as specified in paragraph (c) of this section.

(ii) Duration: 3.5 to 6.5 seconds.

(iii) Throttle position: fully open until speed is at least 85 percent of the rated speed.

(4) Transition period as specified in § 86.884–7(a)(2)(iii):

(i) Throttle position: moved rapidly to, and held in, the fully closed position.

(5) Acceleration mode as specified in § 86.884–7(a)(2)(iv):

(i) Duration: 8 to 12 seconds.

(ii) Throttle position: fully open when speed is at intermediate speed.

(6) Transition period as specified in § 86.884–7(a)(3)(i):

(i) Duration: 50 to 60 seconds.

(ii) Average speed during the last 10 seconds shall be within ±50 rpm of rated speed.

(iii) Average observed power during the last 10 seconds shall be at least 95 percent of the horsepower developed during the preconditioning mode.

(7) Lugging mode as specified in § 86.884–7(a)(3)(ii):

(i) Linearity: ±100 rpm as specified in paragraph (c) of this section.

(ii) Duration: 30 to 40 seconds.

(iii) Speed at end: intermediate speed.

(c) Determine if the linearity requirements of § 86.884–7 were met by means of the following procedure:

(1) For the acceleration mode specified in § 86.884–7(a)(2)(ii), note the maximum deflection of the rpm trace from a straight line drawn between the starting and ending points specified in paragraph (a)(3) of this section.

(2) For the lugging mode specified in § 86.884–7(a)(3)(ii), note the maximum deflection of the rpm trace from a straight line drawn from the starting and ending points specified in paragraph (a)(7) of this section.

(3) The test results will be invalid if any deflection is greater than 100 rpm.

(4) This linearity check may be performed by direct analysis of the recorder traces, or by computer analysis of data collected by automatic data collection equipment.

(d) Analyze the smoke trace by means of the following procedure:

(1) Starting at the beginning of the first acceleration, as defined in paragraph (a)(2) of this section, and stopping at the end of the second acceleration, as defined in paragraph (a)(3) of this section, divide the smoke trace into half-second intervals. Similarly, subdivide into half-second intervals the third acceleration mode and the lugging mode as defined by paragraphs (a)(5) and (7) respectively, of this section.

(2) Determine the average smoke reading during each half-second interval.

(3) Locate and record the 15 highest half-second readings during the acceleration mode of each dynamometer cycle.

(4) Locate and record the five highest half-second readings during the lugging mode of each dynamometer cycle.

(5) Examine the average half-second values which were determined in paragraphs (d)(3) and (d)(4) of this section and record the three highest values for each dynamometer cycle.

(6) This smoke trace analysis may be performed by direct analysis of the recorder traces, or by computer analysis of data collected by automatic data collection equipment.

[48 FR 52203, Nov. 16, 1983, as amended at 49 FR 48141, Dec. 10, 1984; 62 FR 47123, Sept. 5, 1997]

§ 86.884–14 Calculations.

(a) If the measured half-second opacity values were obtained with a smokemeter with an optical path length different than shown in the table in § 86.884–8(c), then convert the measured half-second values or the original instantaneous values to the appropriate equivalent optical path length values specified in the table. Convert the opacity values according to the following equations:

$$N_s = 100 \times (1 - (1 - N_m / 100)^{L_s / L_m})$$

L_m and L_s must use consistent units in the above equation

Where:

N_m = Measured half-second value for conversion, percent opacity

L_m = Measuring smokemeter optical path length, meters

L_s = Standard optical path length corresponding with engine power, n

N_s = Standard half-second value, percent opacity

(b) Average the 45 readings in § 86.884–13(d)(3) or the equivalent converted values from paragraph (a) of this section if appropriate, and designate the value as ''A''. This is the value for the engine acceleration mode.

(c) Average the 15 readings in § 86.884–13(d)(4) or the equivalent converted values from paragraph (a) of this section if appropriate, and designate the value as ''B''. This is the value for the engine lugging mode.

(d) Average the 9 readings in § 86.884–13(d)(5) or the equivalent converted values from paragraph (a) of this section if appropriate, and designate the value as ''C''. This is the value for the peaks in either mode.

(e)(1) If multiple smokemeters were used, the half-second values for each mode from each smokemeter shall be combined and the calculated average based upon the total number of combined values.

(2) For example, if two smokemeters were used for acceleration mode data, 45 half-second values in each data set from both smokemeters would be combined to form a data set of 90 values, which would then be averaged.

[62 FR 47123, Sept. 5, 1997, as amended at 69 FR 2441, Jan. 15, 2004]

Subpart J—Fees for the Motor Vehicle and Engine Compliance Program

§ 86.901 Assessment of fees.

See 40 CFR part 85, subpart Y, for the applicable fees associated with certifying engines and vehicles under this part.

[71 FR 51487, Aug. 30, 2006]

Subpart K—Selective Enforcement Auditing of New Heavy-Duty Engines

§ 86.1001 Applicability.

(a) The selective enforcement auditing program described in 40 CFR part 1068, subpart E, applies for all heavy-duty engines as described in this section. In addition, the provisions of 40 CFR 1068.10 and 1068.20 apply for any selective enforcement audits of these engines.

(b) For heavy-duty engines, the prescribed test procedure is the Federal Test Procedure as described in subparts I, N, and P of this part (including provisions of 40 CFR part 1065 as specified in this part), except that they shall not be subject to the test procedures specified in §§ 86.1360(b)(2) and (f), 86.1370, 86.1372, and 86.1380. The Administrator may, on the basis of a written application by a manufacturer, approve optional test procedures other than those in subparts I, N, and P of this part for any heavy-duty vehicle which is not susceptible to satisfactory testing using the procedures in subparts I, N, and P of this part.

[75 FR 22980, Apr. 30, 2010]

Subpart L—Nonconformance Penalties for Gasoline-Fueled and Diesel Heavy-Duty Engines and Heavy-Duty Vehicles, Including Light-Duty Trucks

SOURCE: 50 FR 35388, Aug. 30, 1985, unless otherwise noted.

§ 86.1101–87 Applicability.

(a) The provisions of this subpart are applicable for 1987 and later model year gasoline-fueled and diesel heavy-duty engines and heavy-duty vehicles. These vehicles include light-duty trucks rated in excess of 6,000 pounds gross vehicle weight.

(b) References in this subpart to engine families and emission control systems shall be deemed to apply to durability groups and test groups as applicable for manufacturers certifying new light-duty trucks and Otto-cycle complete heavy-duty vehicles under the provisions of subpart S of this part.

[65 FR 59957, Oct. 6, 2000]

§ 86.1102–87 Definitions.

(a) The definitions in this section apply to this subpart.

(b) As used in this subpart, all terms not defined herein have the meaning given them in the Act.

Compliance level means the deteriorated pollutant emissions level at the 60th percentile point for a population of heavy-duty engines or heavy-duty vehicles subject to Production Compliance Audit testing pursuant to the requirements of this subpart. A compliance level for a population can only be determined for a pollutant for which an upper limit has been established in this subpart.

Configuration means a subdivision, if any, of a heavy-duty engine family for which a separate projected sales figure is listed in the manufacturer's Application for Certification and which can be described on the basis of emission control system, governed speed, injector size, engine calibration, or other parameters which may be designated by the Administrator, or a subclassification of light-duty truck engine family emission control system combination on the basis of engine code, inertia weight class, transmission type and gear ratios, rear axle ratio, or other parameters which may be designated by the Administrator.

NCP means a nonconformance penalty as described in section 206(g) of the Clean Air Act and in this subpart.

PCA means Production Compliance Audit as described in § 86.1106–87 of this subpart.

Round has the meaning given in 40 CFR 1065.1001.

Subclass means a classification of heavy-duty engines of heavy-duty vehicles based on such factors as gross vehicle weight rating, fuel usage (gasoline-, diesel-, and methanol-fueled), vehicle usage, engine horsepower or additional criteria that the Administrator shall apply. Subclasses include, but are not limited to:

(i) Light-duty gasoline-fueled Otto cycle trucks (6,001–8,500 lb. GVW)

(ii) Light-duty methanol-fueled Otto cycle trucks (6,001–8,500 lb. GVW)

(iii) Light-duty petroleum-fueled diesel trucks (6,001–8,500 lb. GVW)

(iv) Light-duty methanol-fueled diesel trucks (6,001–8,500 lb. GVW)

(v) Light heavy-duty gasoline-fueled Otto cycle engines (for use in vehicles of 8,501–14,000 lb. GVW)

(vi) Light heavy-duty methanol-fueled Otto cycle engines (for use in vehicles of 8,501–14,000 lb. GVW)

(vii) Heavy heavy-duty gasoline-fueled Otto cycle engines (for use in vehicles of 14,001 lb and above GVW)

(viii) Heavy heavy-duty methanol-fueled Otto cycle engines (for use in vehicles of 14,001 lb. and above GVW)

(ix) Light heavy-duty petroleum-fueled diesel engines (see § 86.085–2(a)(1))

(x) Light heavy-duty methanol-fueled diesel engines (see § 86.085–2(a)(1))

(xi) Medium heavy-duty petroleum-fueled diesel engines (see § 86.085–2(a)(2))

(xii) Medium heavy-duty methanol-fueled diesel engines (see § 86.085–2(a)(2))

(xiii) Heavy heavy-duty petroleum-fueled diesel engines (see § 86.085–2(a)(3))

(xiv) Heavy heavy-duty methanol-fueled diesel engines (see § 86.085–2(a)(3))

(xv) Petroleum-fueled Urban Bus engines (see § 86.091–2)

(xvi) Methanol-fueled Urban Bus engines (see § 86.091–2).

For NCP purposes, all optionally certified engines and/or vehicles (engines certified in accordance with § 86.087–10(a)(3) and vehicles certified in accordance with § 86.085–1(b)) shall be considered part of, and included in the FRAC calculation of, the subclass for which they are optionally certified.

Test Sample means a group of heavy-duty engines or heavy-duty vehicles of the same configuration which have been selected for emission testing.

Upper limit means the emission level for a specific pollutant above which a certificate of conformity may not be issued or may be suspended or revoked.

[50 FR 35388, Aug. 30, 1985, as amended at 55 FR 46628, Nov. 5, 1990; 79 FR 23703, Apr. 28, 2014]

§ 86.1103–2016 Criteria for availability of nonconformance penalties.

(a) *General*. This section describes the three criteria EPA will use to use to evaluate whether NCPs are appropriate under the Clean Air Act for a given pollutant and a given subclass of heavy-duty engines and heavy-duty vehicles. Together, these criteria evaluate the likelihood that a manufacturer will be technologically unable to meet a standard on time. Note that since the first two of these criteria are intended to address the question of whether a given standard creates the possibility for this to occur, they are evaluated before the third criterion that addresses the likelihood that the possibility will actually happen.

(b) *Criteria*. We will establish NCPs for a given pollutant and subclass when we find that each of the following criteria is met:

(1) There is a new or revised emission standard is more stringent than the previous standard for the pollutant, or an existing standard for that pollutant has become more difficult to achieve because of a new or revised standard. When evaluating this criterion, EPA will consider a new or revised standard to be ''new'' or ''revised'' until the point at which all manufacturers already producing U.S.-directed engines or vehicles within the subclass have achieved full compliance with the standard. For purposes of this criterion, EPA will generally not consider compliance using banked emission credits to be ''full compliance''.

(2) Substantial work is required to meet the standard for which the NCP is offered, as evaluated from the point at which the standard was adopted or revised (or the point at which the standard became more difficult meet because another standard was adopted or revised). Substantial work, as used in this paragraph (b)(2), means the application of technology not previously used in an engine or vehicle class or subclass, or the significant modification of existing technology or design parameters, needed to bring the vehicle or engine into compliance with either the more stringent new or revised standard or an existing standard which becomes more difficult to achieve because of a new or revised standard. Note that where this criterion is evaluated after any of the work has been completed, the criterion would be interpreted as whether or not substantial work was required to meet the standard.

(3) There is or is likely to be a technological laggard for the subclass. Note that a technological laggard is a manufacturer that is unable to meet the standard for one or more products within the subclass for technological reasons.

(c) *Evaluation*. (1) We will generally evaluate these criteria in sequence. Where we find that the first criterion has not been met, we will not consider the other two criteria. Where we find that the first criterion has been met but not the second, we will not consider the third criterion. We may announce our findings separately or simultaneously.

(2) We may consider any available information in making our findings.

(3) Where we are uncertain whether the first and/or second criteria have been met, we may presume that they have been met and make our decision based solely on whether or not the third criterion has been met.

(4) Where we find that a manufacturer will fail to meet a standard but are uncertain whether the failure is a technological failure, we may presume

that the manufacturer is a technological laggard.

[81 FR 73980, Oct. 25, 2016]

§ 86.1104–2016 Determination of upper limits.

EPA shall set a separate upper limit for each phase of NCPs and for each service class.

(a) Except as provided in paragraphs (b), (c) and (d) of this section, the upper limit shall be set as follows:

(1) The upper limit applicable to a pollutant emission standard for a subclass of heavy-duty engines or heavy-duty vehicles for which an NCP is established in accordance with § 86.1103–87, shall be the previous pollutant emission standard for that subclass.

(2) If a manufacturer participates in any of the emissions averaging, trading, or banking programs, and carries over certification of an engine family from the prior model year, the upper limit for that engine family shall be the family emission limit of the prior model year, unless the family emission limit is less than the upper limit determined in paragraph (a)(1) of this section.

(b) If no previous standard existed for the pollutant under paragraph (a) of this section, the upper limit will be developed by EPA during rulemaking.

(c) EPA may set the upper limit during rulemaking at a level below the level specified in paragraph (a) of this section if we determine that a lower level is achievable by all engines or vehicles in that subclass.

(d) EPA may set the upper limit at a level above the level specified in paragraph (a) of this section if we determine that such level will not be achievable by all engines or vehicles in that subclass.

[81 FR 73981, Oct. 25, 2016]

§ 86.1105–87 Emission standards for which nonconformance penalties are available.

(a)–(b) [Reserved]

(c) Effective in the 1991 model year, NCPs will be available for the following additional emission standards:

(1) [Reserved]

(2) Petroleum-fueled diesel heavy-duty engine oxides of nitrogen standard of 5.0 grams per brake horsepower-hour.

(i) For petroleum-fueled light heavy-duty diesel engines:

(A) The following values shall be used to calculate an NCP in accordance with § 86.1113–87(a):

(*1*) COC_{50}: $830.

(*2*) COC_{90}: $946.

(*3*) MC_{50}: $1,167 per gram per brake horsepower-hour.

(*4*) F: 1.2.

(B) The following factor shall be used to calculate the engineering and development component of the NCP in accordance with § 86.1113–87(h): 0.12.

(ii) For petroleum-fueled medium heavy-duty diesel engines:

(A) The following values shall be used to calculate an NCP in accordance with § 86.1113–87(a):

(*1*) COC_{50}: $905.

(*2*) COC_{90}: $1,453.

(*3*) MC_{50}: $1,417 per gram per brake horsepower-hour.

(*4*) F: 1.2.

(B) The following factor shall be used to calculate the engineering and development component of the NCP in accordance with § 86.1113–87(h): 0.11.

(iii) For petroleum-fueled heavy-duty diesel engines:

(A) The following values shall be used to calculate an NCP in accordance with § 86.1113–87(a):

(*1*) COC_{50}: $930.

(*2*) COC_{90}: $1,590.

(*3*) MC_{50}: $2,250 per gram per brake horsepower-hour.

(*4*) F: 1.2.

(B) The following factor shall be used to calculate the engineering and development component of the NCP in accordance with § 86.1113–87(h): 0.11.

(3) Petroleum-fueled diesel light-duty trucks (between 6,001 and 14,000 lbs GVW) particulate matter emission standard of 0.13 grams per vehicle mile.

(i) The following values shall be used to calculate an NCP in accordance with § 86.1113–87(a):

(A) COC_{50}: $711.

(B) COC_{90}: $1,396.

(C) MC_{50}: $2,960 per gram per brake horsepower-hour.

(D) F: 1.2.

(ii) The following factor shall be used to calculate the engineering and development component of the NCP in accordance with § 86.1113–87(h): 0.01.

(d) Effective in the 1993 model year, NCPs will be available for the following additional emission standard:

(1) Petroleum-fueled diesel bus engine (as defined in § 86.093–2) particulate emission standard of 0.10 grams per brake horsepower-hour.

(i) The following values shall be used to calculate an NCP for the standard set forth in § 86.093–11(a)(1)(iv)(A) in accordance with § 86.1113–87(a):

(A) COC_{50}: $4,020.

(B) COC_{90}: $4,535.

(C) MC_{50}: $22,971 per gram per brake horsepower-hour.

(D) F: 1.2.

(E) UL: 0.25 grams per brake horsepower-hour.

(ii) The following factor shall be used to calculate the engineering and development component of the NCP for the standard set forth in § 86.093–11(a)(1)(iv)(A) in accordance with § 86.1113–87(h): 0.02.

(2) [Reserved]

(e) The values of COC_{50}, COC_{90}, and MC_{50} in paragraphs (a) and (b) of this section are expressed in December 1984 dollars. The values of COC_{50}, COC_{90}, and MC_{50} in paragraphs (c) and (d) of this section are expressed in December 1989 dollars. The values of COC_{50}, COC_{90}, and MC_{50} in paragraph (f) of this section are expressed in December 1991 dollars. The values of COC_{50}, COC_{90}, and MC_{50} in paragraphs (g) and (h) of this section are expressed in December 1994 dollars. The values of COC_{50}, COC_{90}, and MC_{50} in paragraph (i) of this section are expressed in December 2001 dollars. These values shall be adjusted for inflation to dollars as of January of the calendar year preceding the model year in which the NCP is first available by using the change in the overall Consumer Price Index, and rounded to the nearest whole dollar.

(f) Effective in the 1994 model year, NCPs will be available for the following emission standards:

(1) Petroleum-fueled urban bus engine (as defined in § 86.091–2) particulate emission standard of 0.07 grams per brake horsepower-hour.

(i) The following values shall be used to calculate an NCP for the standard set forth in § 86.094–11(a)(1)(iv)(A) in accordance with § 86.1113–87(a):

(A) COC_{50}: $3292.

(B) COC_{90}: $10,014.

(C) MC_{50}: $109,733.

(D) F: 1.2.

(ii) The following factor shall be used to calculate the engineering and development component of the NCP for the standard set forth in § 86.094–11(a)(1)(iv)(A) in accordance with § 86.1113–87(h): 0.38.

(2) Petroleum-fueled diesel heavy-duty engine particulate matter emission standard of 0.10 grams per brake horsepower-hour.

(i) For petroleum-fueled light heavy-duty diesel engines:

(A) The following values shall be used to calculate an NCP in accordance with § 86.1113–87(a):

(*1*) COC_{50}: $772.

(*2*) COC_{90}: $1,325.

(*3*) MC_{50}: $8,178 per gram per brake horsepower-hour.

(*4*) F: 1.2.

(B) The following factor shall be used to calculate the engineering and development component of the NCP in accordance with § 86.1113–87(h): 0.081.

(ii) For petroleum-fueled medium heavy-duty diesel engines:

(A) The following values shall be used to calculate an NCP in accordance with § 86.1113–87(a):

(*1*) COC_{50}: $1,276.

(*2*) COC_{90}: $3,298.

(*3*) MC_{50}: $15,370 per gram per brake horsepower-hour.

(*4*) F: 1.2.

(B) The following factor shall be used to calculate the engineering and development component of the NCP in accordance with § 86.1113–87(h): 0.098.

(iii) For petroleum-fueled heavy heavy-duty diesel engines:

(A) The following values shall be used to calculate an NCP in accordance with § 86.1113–87(a):

(*1*) COC_{50}: $2,105.

(*2*) COC_{90}: $6,978.

(*3*) MC_{50}: $30,070 per gram per brake horsepower-hour.

(*4*) F: 1.2.

(B) The following factor shall be used to calculate the engineering and development component of the NCP in accordance with § 86.1113-87(h): 0.083.

(g) Effective in the 1996 model year, NCPs will be available for the following emission standard:

(1) Light-duty truck 3 diesel-fueled vehicle at full useful life (as defined in § 86.094–2) particulate matter emission standard of 0.10 g/mi.

(i) The following values shall be used to calculate an NCP for the standard set forth in § 86.094–9(a)(1)(ii) in accordance with § 86.1113–87(a):

(A) COC_{50}: $441.

(B) COC_{90}: $1,471.

(C) MC_{50}: $14,700 per gram per mile.

(D) F: 1.2.

(ii) The following factor shall be used to calculate the engineering and development component of the NCP for the standard set forth in § 86.094–9(a)(1)(ii) in accordance with § 86.1113–87(h): 0.093.

(2) Light-duty truck 3 diesel-fueled vehicle at full useful life (as defined in § 86.094–2) oxides of nitrogen emission standard of 0.98 g/mi.

(i) The following values shall be used to calculate an NCP for the standard set forth in § 86.094–9(a)(1)(ii) in accordance with § 86.1113–87(a):

(A) COC_{50}: $654.

(B) COC_{90}: $779.

(C) MC_{50}: $908 per gram per mile.

(D) F: 1.2.

(ii) The following factor shall be used to calculate the engineering and development component of the NCP for the standard set forth in § 86.094–9(a)(1)(ii) in accordance with § 86.1113–87(h): 0.082.

(3) 1996 Urban Bus (as defined in § 86.094–2) particulate matter emission standard of 0.05 g/BHp-hr.

(i) The following values shall be used to calculate an NCP for the standard set forth in § 86.094–9(a)(1)(ii) in accordance with § 86.1113–87(a):

(A) COC_{50}: $576.

(B) COC_{90}: $6,569.

(C) MC_{50}: $28,800 per gram per brake horsepower-hour.

(D) F: 1.2.

(ii) The following factor shall be used to calculate the engineering and development component of the NCP for the standard set forth in § 86.094–9(a)(1)(ii) in accordance with § 86.1113–87(h): 0.500.

(h) Effective in the 1998 model year, NCPs will be available for the following emission standard:

(1) Petroleum-fueled diesel heavy-duty engine oxides of nitrogen standard of 4.0 grams per brake horsepower-hour.

(i) For petroleum-fueled light heavy-duty diesel engines:

(A) The following values shall be used to calculate an NCP in accordance with § 86.1113–87(a):

(*1*) COC_{50}: $833.

(*2*) COC_{90}: $1,513.

(*3*) MC_{50}: $833 per gram per brake horsepower-hour.

(*4*) F: 1.2.

(B) The following factor shall be used to calculate the engineering and development component of the NCP for the standard set forth in § 86.094–9(a)(1)(ii) in accordance with § 86.1113–87(h): 0.039.

(ii) For petroleum-fueled medium heavy-duty diesel engines:

(A) The following values shall be used to calculate an NCP in accordance with § 86.1113–87(a):

(*1*) COC_{50}: $444.

(*2*) COC_{90}: $1,368.

(*3*) MC_{50}: $444 per gram per brake horsepower-hour.

(*4*) F: 1.2.

(B) The following factor shall be used to calculate the engineering and development component of the NCP for the standard set forth in § 86.094–9(a)(1)(ii) in accordance with § 86.1113–87(h): 0.043.

(iii) For petroleum-fueled heavy heavy-duty diesel engines:

(A) The following values shall be used to calculate an NCP in accordance with § 86.1113–87(a):

(*1*) COC_{50}: $1,086.

(*2*) COC_{90}: $2,540.

(*3*) MC_{50}: $1,086 per gram per brake horsepower-hour

(*4*) F: 1.2.

(B) The following factor shall be used to calculate the engineering and development component of the NCP for the standard set forth in § 86.094–9(a)(1)(ii) in accordance with § 86.1113–87(h): 0.039.

(2) [Reserved]

(i) Effective in the 2004 model year, NCPs will be available for the following emission standard:

(1) Diesel heavy-duty engine non-methane hydrocarbon plus oxides of nitrogen standard of 2.4 grams per brake

horsepower-hour (or alternatively, 2.5 grams per brake horsepower-hour with a limit on non-methane hydrocarbon emissions of 0.5 grams per brake horsepower-hour), in § 86.004–11(a)(1)(i).

(i) For light heavy-duty diesel engines:

(A) The following values shall be used to calculate an NCP in accordance with § 86.1113–87(a):

(*1*) COC_{50}: $1,240.

(*2*) COC_{90}: $2,710.

(*3*) MC_{50}: $2,000 per gram per brake horsepower-hour.

(*4*) F: 1.3.

(*5*) UL: 4.5 grams per brake horsepower-hour; notwithstanding § 86.1104–91.

(B) The following factor shall be used to calculate the engineering and development component of the NCP for the standard set forth in § 86.004–11(a)(1)(i) in accordance with § 86.1113–87(h): 0.403.

(ii) For medium heavy-duty diesel engines:

(A) The following values shall be used to calculate an NCP in accordance with § 86.1113–87(a):

(*1*) COC_{50}: $2,740.

(*2*) COC_{90}: $4,930.

(*3*) MC_{50}: $1,400 per gram per brake horsepower-hour.

(*4*) F: 1.3.

(*5*) UL: 4.5 grams per brake horsepower-hour; notwithstanding § 86.1104–91.

(B) The following factor shall be used to calculate the engineering and development component of the NCP for the standard set forth in § 86.004–11(a)(1)(i) in accordance with § 86.1113–87(h): 0.197.

(iii) For heavy heavy-duty diesel engines:

(A) The following values shall be used to calculate an NCP in accordance with § 86.1113–87(a):

(*1*) COC_{50}: $6,810.

(*2*) COC_{90}: $12,210.

(*3*) MC_{50}: $5,600 per gram per brake horsepower-hour.

(*4*) F: 1.3.

(*5*) UL: 6.0 grams per brake horsepower-hour; notwithstanding § 86.1104–91.

(B) The following factor shall be used to calculate the engineering and development component of the NCP for the standard set forth in § 86.004–11(a)(1)(i) in accordance with § 86.1113–87(h): 0.090.

(iv) For diesel urban bus engines:

(A) The following values shall be used to calculate an NCP in accordance with § 86.1113–87(a):

(*1*) COC_{50}: $3,930.

(*2*) COC_{90}: $6,660.

(*3*) MC_{50}: $3,800 per gram per brake horsepower-hour.

(*4*) F: 1.3.

(*5*) UL: 4.5 grams per brake horsepower-hour; notwithstanding § 86.1104–91.

(B) The following factor shall be used to calculate the engineering and development component of the NCP for the standard set forth in § 86.004–11(a)(1)(i) in accordance with § 86.1113–87(h): 0.155.

(2) [Reserved]

[50 FR 53466, Dec. 31, 1985, as amended at 52 FR 47870, Dec. 16, 1987; 53 FR 43878, Oct. 31, 1988; 56 FR 64712, Dec. 12, 1991; 58 FR 15802, Mar. 24, 1993; 58 FR 68540, Dec. 28, 1993; 60 FR 33925, June 29, 1995; 61 FR 6949, 6953, Feb. 23, 1996; 67 FR 51477, Aug. 8, 2002; 69 FR 18803, Apr. 9, 2004; 77 FR 4687, Jan. 31, 2012; 77 FR 54402, Sept. 5, 2012; 79 FR 23703, Apr. 28, 2014; 81 FR 73981, Oct. 25, 2016]

§ 86.1106–87 Production compliance auditing.

For a model year in which upper limits for heavy-duty engine or heavy-duty vehicle emission standards for one or more exhaust pollutants are specified in § 86.1105–87, a manufacturer may elect to conduct a Production Compliance Audit (PCA) for each engine or vehicle configuration satisfying the following conditions:

(a) Certification test results, pursuant to § 86.082–23, exceed the emission standard for a particular pollutant but do not exceed the upper limit established for that pollutant. In that event, the manufacturer will be offered a qualified certificate of conformity allowing for the introduction into commerce of the specified engine family, *Provided*, That:

(1) The manufacturer must agree to conduct a PCA of those engines or vehicles;

(2) PCA testing must be conducted on the same configurations that exceeded the standard in certification. In lieu of that requirement, the Administrator may approve testing of a greater or lesser number of configurations provided the manufacturer agrees to pay the NCP determined from the CL of

each tested configuration for that configuration and for other non-tested configurations that have similar emission characteristics. If an acceptable showing of similar emission characteristics is not made, the highest CL of the configurations tested will apply to all non-tested configurations exceeding the standard.

(3) The selection of engines or vehicles for PCA testing must be initiated no later than five (5) days after the start of assembly-line production of the specified engine or vehicle configuration, unless that period is extended by the Administrator;

(4) The manufacturer must agree:

(i) To pay the NCP amount calculated as a result of PCA testing on each engine or vehicle, unless the manufacturer successfully challenges the Administrator's determination of the compliance level or penalty calculation or both under § 86.1115–87(c);

(ii) To recall any engines or vehicles introduced into commerce, without invoking the procedural requirements of section 207(c) of the Clean Air Act, if the compliance level for the engine or vehicle configuration of (a)(2) exceeds the upper limit as determined by the PCA;

(5) If the compliance level determined in the PCA is below the emission standard, no NCP will be offered, and all appropriate qualifications will be removed from the qualified certificate of conformity.

(b) An engine or vehicle configuration fails a Selective Enforcement Audit (SEA) under subpart K of 40 CFR part 86 with respect to the standard for a particular pollutant but does not fail with respect to the upper limit established for that pollutant, and no NCP has been previously assessed for that configuration, *Provided*, That:

(1) The manufacturer must submit a written report to the Administrator within five (5) days after failure to pass the audit containing the following:

(i) A statement that the manufacturer does not intend, at that time, to make any engine and/or emission control system design changes that may remedy the nonconformity; and

(ii) A request from the manufacturer to conduct the PCA, including the date the testing will begin;

(2) Failure to submit the report within five (5) days after the SEA failure will result in the forfeiture of the NCP option, unless a satisfactory justification for the delay is provided to the Administrator;

(3) The selection of any required engines or vehicles for PCA testing must be initiated no later than ten (10) days after the SEA failure unless extended by the Administrator; otherwise, the manufacturer may forfeit the option to elect an NCP;

(4) PCA testing must be conducted on the same configuration that failed the SEA;

(5) Test results from the SEA, together with any additional test results required during the PCA, will be used in establishing a compliance level for the configuration pursuant to § 86.1112–87(a); and

(6) The manufacturer, upon approval by the Administrator to conduct a PCA on a failed SEA engine or vehicle configuration, must agree:

(i) To pay the NCP amount calculated as a result of PCA testing on each engine or vehicle introduced into commerce after the tenth day of the SEA failure, unless the manufacturer successfully challenges the Administrator's determination of the compliance level or penalty calculation or both under § 86.1115–87(c);

(ii) To recall any engines or vehicles introduced into commerce after the tenth day of the SEA failure, without invoking the procedural requirements of section 207(c) of the Clean Air Act, if the compliance level of the engine or vehicle configuration exceeds the upper limit as determined by the PCA.

(c) An engine or vehicle configuration, for which an NCP has been previously assessed for a particular pollutant, either passes an SEA with respect to the particular pollutant standard, fails an SEA with respect to the particular pollutant standard but not the previous compliance level, or fails an SEA with respect to the previous compliance level but not the associated upper limit, *Provided*, That:

(1) The manufacturer must submit a written statement to the Administrator within five (5) days of the conclusion of the SEA requesting a PCA, including the date the PCA testing will

begin; otherwise, the manufacturer forfeits the option to establish a new compliance level;

(2) The selection of any required engines or vehicles for PCA testing must be initiated no later than ten (10) days after the conclusion of the SEA unless the period is extended by the Administrator; otherwise, the manufacturer forfeits the option to establish a new compliance level;

(3) PCA testing must be conducted on the same configuration tested during the SEA, and all conditions in the SEA test order must apply to the PCA;

(4) Test results for the SEA, together with any additional test results required during the PCA, will be used in establishing a new compliance level for the configuration pursuant to § 86.1112–87(a);

(5) The manufacturer must agree:

(i) To pay the NCP amount calculated as a result of PCA testing on each engine or vehicle introduced into commerce after the tenth day of the conclusion of the SEA, unless the manufacturer successfully challenges the Administrator's determination of the compliance level or penalty calculation or both under § 86.1115–87(c);

(ii) To recall any engines or vehicles introduced into commerce after the tenth day after the conclusion of the SEA, without invoking the procedural requirements of section 207(c) of the Clean Air Act, if the engine or vehicle configuration exceeds the upper limit as determined by the PCA;

(6) A previously assessed NCP will be terminated and no NCP will be established as a result of the new PCA if the compliance level is determined to be below the applicable emission standards.

(d) The implementation of a production running change that causes the emission level for a particular pollutant to be either above the emission standard but below the associated upper limit for a vehicle or engine configuration for which an NCP has not been previously assessed, or below the associated upper limit for a vehicle or engine configuration for which an NCP has been previously assessed, regardless of the previous compliance level. In that event, the manufacturer will be offered a qualified certificate of conformity allowing for the introduction into commerce of the engine or vehicle configuration resulting from the running change, *Provided*, That:

(1) The manufacturer must submit a written report to the Administrator outlining the reason for the running change and the date the manufacturer will begin PCA testing;

(2) The manufacturer must agree:

(i) To pay the NCP amount calculated as a result of PCA testing on each engine or vehicle, unless the manufacturer successfully challenges the Administrator's determination of compliance level or penalty calculation or both under § 86.1115–87(c);

(ii) To recall any engines or vehicles introduced into commerce, without invoking the procedural requirements of section 207(c) of the Clean Air Act, if the engine or vehicle configuration exceeds the upper limit as determined by the PCA;

(3) The selection of engines or vehicles for PCA testing must be initiated no later than five (5) days after the start of assembly line production of the engine or vehicle configuration resulting from the running change unless that period is extended by the Administrator; and

(4) If the compliance level is determined to be below the applicable emission standard, a previously assessed NCP will be terminated, an NCP will not be established as a result of the PCA testing, and all qualifications will be removed from the qualified certificate of conformity.

(e) The following requirements are applicable to each PCA under this subpart.

(1) The manufacturer shall make the following documents available to EPA Enforcement Officers upon request;

(i) A properly filed and current application for certification, following the format prescribed by the EPA for the appropriate model year; and

(ii) A copy of the shop manual and dealer service bulletins for the configurations being tested.

(2) Only one mechanic at a time per engine or vehicle shall make authorized checks, adjustments, or repairs, unless a particular check, adjustment, or repair requires a second mechanic as

indicated in the shop manual or dealer service bulletins.

(3) A mechanic shall not perform any check, adjustment, or repair without an Enforcement Officer present unless otherwise authorized.

(4) The manufacturer shall utilize only those tools and test equipment utilized by its dealers or those dealers using its engines when performing authorized checks, adjustments, or repairs.

[50 FR 35388, Aug. 30, 1985, as amended at 58 FR 68540, Dec. 28, 1993]

§ 86.1107–87 Testing by the Administrator.

(a) The Administrator may require that engines or vehicles of a specified configuration be selected in a manner consistent with the requirements of § 86.1110–87 and submitted to him at such place as he may designate for the purpose of conducting emission tests in accordance with § 86.1111–87 to determine whether engines or vehicles manufactured by the manufacturer conform with the regulations of this subpart.

(b)(1) Whenever the Administrator conducts a test on a test engine or vehicle or the Administrator and manufacturer each conduct a test on the same test engine or vehicle, the results of the Administrator's test will comprise the official data for that engine or vehicle.

(2) Whenever the manufacturer conducts all tests on a test engine or vehicle, the manufacturer's test data will be accepted as the official data, provided that if the Administrator makes a determination based on testing under paragraph (a) of this section that there is a substantial lack of agreement between the manufacturer's test results and the Administrator's test results, no manufacturer's test data from the manufacturer's test facility will be accepted for purposes of this subpart.

(c) If the Administrator determines that testing conducted under paragraph (a) of this section demonstrates a lack of agreement under paragraph (b)(2) of this section, the Administrator shall:

(1) Notify the manufacturer in writing of his determination that the manufacturer's test facility is inappropriate for conducting the tests required by this subpart and the reasons therefore; and

(2) Reinstate any manufacturer's data only upon a showing by the manufacturer that the data acquired under paragraph (a) of this section was erroneous and the manufacturer's data was correct.

(d) The manufacturer may request in writing that the Administrator reconsider his determination in paragraph (b)(2) of this section based on data or information which indicates that changes have been made to the test facility and that these changes have resolved the reasons for disqualification.

§ 86.1108–87 Maintenance of records.

(a) The manufacturer of any new gasoline-fueled or diesel heavy-duty engine or heavy-duty vehicle subject to any of the provisions of this subpart shall establish, maintain, and retain the following adequately organized and indexed records:

(1) *General records.* A description of all equipment used to test engines or vehicles in accordance with § 86.1111–87, pursuant to PCA testing under this subpart, specifically;

(i) If testing heavy-duty gasoline engines, the equipment requirements specified in 40 CFR part 1065, subparts B and C;

(ii) If testing heavy-duty diesel engines, the equipment requirements specified in 40 CFR part 1065, subparts B and C;

(iii) If testing light-duty gasoline-fueled trucks, the equipment requirements specified in §§ 86.106 (excluding all references to particulate emission testing) and 86.1506–84 of this part; and

(iv) If testing light-duty diesel trucks, the equipment requirements specified in § 86.106 (excluding all references to evaporative emission testing) of this part.

(2) *Individual records.* These records pertain to each Production Compliance Audit conducted pursuant to this subpart.

(i) The date, time, and location of each test;

(ii) The number of hours of service accumulated on the engine or the number of miles on the vehicle when the test began and ended;

(iii) The names of all supervisory personnel involved in the conduct of the Production Compliance Audit;

(iv) A record and description of any repair performed, giving the date and time of the repair, the reason for it, the person authorizing it, and the names of all personnel involved in the supervision and performance of the repair;

(v) The date when the engine or vehicle was shipped from the assembly plant or associated storage facility and when it was received at the testing facility;

(vi) A complete record of all emission tests performed pursuant to this subpart (except tests performed by EPA directly), including all individual worksheets and/or other documentation relating to each test, or exact copies thereof, specifically—

(A) If testing heavy-duty gasoline engines, the record requirements specified in 40 CFR 1065.695;

(B) If testing heavy-duty diesel engines, the record requirements specified in 40 CFR 1065.695;

(C) If testing light-duty gasoline fueled trucks, the record requirements specified in §§ 86.142 (excluding all references to diesel vehicles) and 86.1542–84; and

(D) If the testing light-duty diesel trucks, the record requirements specified in § 86.142; and

(vii) A brief description of any significant Production Compliance Audit events commencing with the test engine or vehicle selection process, but not described by any subparagraph under paragraph (a)(2) of this section, including such extraordinary events as engine damage during shipment or vehicle accident.

(3) The manufacturer shall record the test equipment description, pursuant to paragraph (a)(1) of this section, for each test cell that was used to perform emission testing under this subpart.

(b) The manufacturer shall retain all records required to be maintained under this subpart for a period of six (6) years after completion of all testing. Records may be retained as hard copy or reduced to microfilm, punch cards, etc., depending upon the manufacturer's record retention procedure, provided that in every case all the information contained in the hard copy is retained.

[50 FR 35388, Aug. 30, 1985, as amended at 70 FR 40437, July 13, 2005]

§ 86.1109–87 Entry and access.

(a) To allow the Administrator to determine whether a manufacturer is complying with the provisions of this subpart, EPA Enforcement Officers are authorized to enter any of the following (during operating hours and upon presentation of credentials):

(1) Any facility where any engine or vehicle to be introduced into commerce or any emission related component is manufactured, assembled, or stored;

(2) Any facility where any tests conducted pursuant to a PCA request or any procedures or activities connected with these tests are or were performed;

(3) Any facility where any engine or vehicle which is being tested, was tested, or will be tested is present; and

(4) Any facility where any record or other document relating to any of the above is located.

(b) Upon admission to any facility referred to in paragraph (a) of this section, EPA Enforcement Officers are authorized to perform the following inspection-related activities:

(1) To inspect and monitor any aspects of engine or vehicle manufacture, assembly, storage, testing and other procedures, and the facilities in which these procedures are conducted.

(2) To inspect and monitor any aspect of engine or vehicle test procedures or activities, including, but not limited to, monitoring engine or vehicle selection, preparation, service or mileage accumulation, preconditioning, repairs, emission test cycles, and maintenance; and to verify calibration of test equipment;

(3) To inspect and make copies of any records or documents related to the assembly, storage, selection and testing of an engine or vehicle; and

(4) To inspect and photograph any part or aspect of any engine or vehicle and any component used in the assembly thereof that is reasonably related to the purpose of the entry.

(c) EPA Enforcement Officers are authorized to obtain reasonable assistance without cost from those in charge of a facility to help them perform any

function listed in this subpart and are authorized to request the manufacturer conducting the PCA to make arrangement with those in charge of a facility operated for its benefit to furnish reasonable assistance without cost to EPA, whether or not the manufacturer controls the facility.

(d) EPA Enforcement Officers are authorized to seek a warrant or court order authorizing the EPA Enforcement Officers to conduct activities related to entry and access as authorized in this section, as appropriate, to execute the functions specified in this section. EPA Enforcement Officers may proceed ex parte to obtain a warrant whether or not the Enforcement Officers first attempted to seek permission of the manufacturer conducting the PCA or the party in charge of the facilities in question to conduct activities related to entry and access as authorized in this section.

(e) A manufacturer that conducts a PCA shall permit EPA Enforcement Officers who present a warrant or court order as described in paragraph (d) of this section to conduct activities related to entry and access as authorized in this section and as described in the warrant or court order. The manufacturer shall cause those in charge of its facility or a facility operated for its benefit to permit EPA Enforcement Officers to conduct activities related to entry and access as authorized in this section pursuant to a warrant or court order whether or not the manufacturer controls the facility. In the absence of such a warrant or court order, EPA Enforcement Officers may conduct activities related to entry and access as authorized in this section only upon the consent of the manufacturer or the party in charge of the facilities in question.

(f) It is not a violation of this part or the Clean Air Act for any person to refuse to permit EPA Enforcement Officers to conduct activities related to entry and access as authorized in this section without a warrant or court order.

(g) A manufacturer is responsible for locating its foreign testing and manufacturing facilities in jurisdictions in which local foreign law does not prohibit EPA Enforcement Officers from conducting the entry and access activities specified in this section. EPA will not attempt to make any inspections which it has been informed that local foreign law prohibits.

(h) For purposes of this section, the following definitions are applicable:

(1) *Presentation of Credentials* means display of the document designating a person as an EPA Enforcement Officer.

(2) Where engine or vehicle storage areas or facilities are concerned, *operating hours* means all times during which personnel other than custodial personnel are at work in the vicinity of the area or facility and have access to it.

(3) Where facilities or areas other than those covered by paragraph (h)(2) of this section are concerned, *operating hours* means all times during which an assembly line is in operation, engine or vehicle assembly is taking place, testing repair, service accumulation, preparation or compilation of records is taking place, or any other procedure or activity related to engine or vehicle manufacture, assembly or testing is being carried out in a facility.

(4) *Reasonable assistance* includes, but is not limited to, clerical, copying, interpreting and translating services, and making personnel of the facility being inspected available during their working hours on an EPA Enforcement Officer's request to inform the EPA Enforcement Officer of how the facility operates and to answer his or her questions. Any employee whom an EPA Enforcement Officer requests the manufacturer to cause to appear for questioning will be entitled to be accompanied, represented and advised by counsel.

§ 86.1110–87 Sample selection.

(a) Engines or vehicles comprising a test sample which are required to be tested pursuant to a PCA in accordance with this subpart will be selected at the location and in the manner specified by EPA. If a manufacturer determines that the test engines or vehicles cannot be selected in the manner specified by EPA, an alternative selection procedure may be employed, provided that the manufacturer requests approval of the alternative procedure in

advance of the start of test sample selection and that the Administrator approves the procedure.

(b) The manufacturer shall have assembled the test engines or vehicles of the configuration selected for testing using its normal mass production processes for engines or vehicles to be distributed into commerce. In the case of heavy-duty engines, if the test engines are selected at a location where they do not have their operational and emission control systems installed, EPA will specify the manner and location for selection of components to complete assembly of the engines. The manufacturer shall assemble these components onto the test engines using normal assembly and quality control procedures as documented by the manufacturer.

(c) No quality control, testing, or assembly procedures will be used on the completed test engine or vehicle or any portion thereof, including parts and subassemblies, that will not be used during the production and assembly of all other engines or vehicles of that configuration.

(d) The EPA Enforcement Officers may specify that they, rather than the manufacturer, will select the test engines or vehicles.

(e) The order in which test engines or vehicles are selected determines the order in which test results are to be used in applying the PCA testing plan in accordance with § 86.1112–87.

(f) The manufacturer shall keep on hand all engines or vehicles comprising the test sample until such time as a compliance level is determined in accordance with § 86.1112–87(a) except that the manufacturer may ship any tested engine or vehicle which has not failed in accordance with § 86.1112–87(f)(1). However, once the manufacturer ships any test engine or vehicle, it relinquishes the prerogative to conduct retests as provided in § 86.1111–87(i).

§ 86.1111–87 Test procedures for PCA testing.

(a)(1) For heavy-duty engines, the prescribed test procedure for PCA testing is the Federal Test Procedure as described in subparts N, I, and P of this part.

(2) For heavy-duty vehicles, the prescribed test procedure for PCA testing is described in subpart M of this part.

(3) For light-duty trucks, the prescribed test procedure for PCA testing is the Federal Test Procedure as described in subparts B and P of this part.

(4) During the testing of heavy-duty diesel engines, the manufacturer shall decide for each engine, prior to the start of the initial cold cycle, whether the measurement of background particulate is required for the cold and hot cycles to be valid. The manufacturer may choose to have different requirements for the cold and hot cycles. If a manufacturer chooses to require the measurement of background particulate, failure to measure background particulate shall void the test cycle regardless of the test results. If a test cycle is void, the manufacturer shall retest using the same validity requirements of the initial test.

(5) When testing light-duty trucks, the following exceptions to the test procedures in subpart B are applicable:

(i) The manufacturer may use gasoline test fuel meeting the specifications of paragraph (a) of § 86.113 for mileage accumulation. Otherwise, the manufacturer may use fuels other than those specified in this section only with advance approval of the Administrator.

(ii) The manufacturer may measure the temperature of the test fuel at other than the approximate midvolume of the fuel tank, as specified in paragraph (a) of § 86.131, and may drain the test fuel from other than the lowest point of the fuel tank, as specified in paragraph (b) of § 86.131, with the advance approval of the Administrator.

(iii) The manufacturer may perform additional preconditioning on PCA test vehicles other than the preconditioning specified in § 86.132 only if the additional preconditioning has been performed on certification test vehicles of the same configuration.

(iv) The manufacturer shall perform the heat build procedure 11 to 34 hours following vehicle preconditioning rather than according to the time period specified in paragraph (a) of § 86.133.

(v) The manufacturer may substitute slave tires for the drive wheel tires on

the vehicle as specified in paragraph (e) of § 86.135, provided that the slave tires are the same size as the drive wheel tires.

(vi) The cold start exhaust emission test described in § 86.137 shall follow the heat build procedure described in § 86.133 by not more than one hour.

(vii) In performing exhaust sample analysis under § 86.140:

(A) When testing diesel vehicles, the manufacturer shall allow a minimum of 20 minutes warm-up for the HC analyzer, and a minimum of 2 hours warm-up for the CO, CO_2 and NO_X analyzers. [Power is normally left on for infrared and chemiluminescent analyzers. When not in use, the chopper motors of the infrared analyzers are turned off and the phototube high voltage supply to the chemiluminescent analyzers is placed in the standby position.]

(B) The manufacturer shall exercise care to prevent moisture from condensing in the sample collection bags.

(viii) The manufacturer need not comply with § 86.142, since the records required therein are provided under other provisions of this subpart.

(ix) In addition to the requirements of subpart B of this part, the manufacturer shall prepare gasoline-fueled vehicles as follows prior to exhaust emission testing:

(A) The manufacturer shall inspect the fuel system to insure the absence of any leaks of liquid or vapor to the atmosphere by applying a pressure of 14.5 ±0.5 inches of water to the fuel system, allowing the pressure to stabilize, and isolating the fuel system from the pressure source. Following isolation of the fuel system, pressure must not drop more than 2.0 inches of water in 5 minutes. If required, the manufacturer shall perform corrective action in accordance with paragraph (d) of this section.

(B) When performing this pressure check, the manufacturer shall exercise care to neither purge nor load the evaporative emission control system.

(C) The manufacturer shall not modify the test vehicle's evaporative emission control system by component addition, deletion, or substitution, except to comply with paragraph (a)(4)(ii) of this section if approved in advance by the Administrator.

(b)(1) The manufacturer shall not adjust, repair, prepare, or modify the engines or vehicles selected for testing and shall not perform any emission tests on engines or vehicles selected for testing pursuant to a PCA request unless the adjustment, repair, preparation, modification, or tests are documented in the manufacturer's engine or vehicle assembly and inspection procedures and are actually performed on all engines or vehicles produced or unless these adjustments or tests are required or permitted under this subpart or are approved in advance by the Administrator.

(2) For 1984 and later model years the Administrator may adjust or cause to be adjusted any engine parameter which the Administrator has determined to be subject to adjustment for certification, Selective Enforcement Audit and Production. Compliance Audit testing in accordance with § 86.084–22(e)(1), to any setting within the physically adjustable range of that parameter, as determined by the Administrator in accordance with § 86.084–2(e)(3)(ii), prior to the performance of any tests. However, if the idle speed parameter is one which the Administrator has determined to be subject to adjustment, the Administrator shall not adjust it to any setting which causes a lower engine idle speed than would have been possible within the physically adjustable range of the idle speed parameter if the manufacturer had accumulated 125 hours of service on the engine or 4,000 miles on the vehicle under paragraph (c) of this section, all other parameters being identically adjusted for the purpose of the comparison. The manufacturer may be requested to supply information to establish such an alternative minimum idle speed. The Administrator, in making or specifying these adjustments, may consider the effect of the deviation from the manufacturer's recommended setting on emissions performance characteristics as well as the likelihood that similar settings will occur on in-use heavy-duty engines or light-duty trucks. In determining likelihood, the Administrator may consider factors such as, but not limited

to, the effect of the adjustment on engine or vehicle performance characteristics and surveillance information from similar in-use engines or vehicles.

(c) Prior to performing emission testing on a PCA test engine, the manufacturer may accumulate on each engine a number of hours of service equal to the greater of 125 hours or the number of hours the manufacturer accumulated during certification on the emission-data engine corresponding to the configuration tested during PCA. Prior to performing emission testing on a PCA test vehicle, the manufacturer may accumulate a number of miles equal to the greater of 4,000 miles or the number of miles the manufacturer accumulated during certification on the emission-data vehicle corresponding to the configuration tested during PCA. Service or mileage accumulation may be performed in any manner the manufacturer desires.

(d) No maintenance shall be performed on test engines or vehicles after selection for testing nor will any test engine or vehicle substitution or replacement be allowed, unless requested of and approved by the Administrator in advance of the performance of any maintenance or engine or vehicle substitution.

(e) The manufacturer shall expeditiously ship test engines or vehicles from the point of selection to the test facility or other location to meet any other requirements of this subpart. If the test facility is not located at or in close proximity to the point of selection, the manufacturer shall assure that test engines or vehicles arrive at the test facility within 24 hours of selection, except that the Administrator may approve more time based upon a request by the manufacturer accompanied by a satisfactory justification.

(f) If an engine or vehicle cannot complete the service or mileage accumulation or emission tests because of engine or vehicle malfunction, the manufacturer may request that the Administrator authorize the repair of the engine or vehicle. If the engine or vehicle cannot be repaired expeditiously, EPA may delete it from the test sequence.

(g)(1) Heavy-duty engine manufacturers with projected sales bound for the United States market for that year of 30,000 or greater, as made in their respective Applications for Certification, shall complete emission testing at their testing facility on a minimum of two engines per 24 hour period, including voided tests.

(2) Heavy-duty engine manufacturers with projected sales bound for the United States market for that year of less than 30,000, as made in their respective Applications for Certification, Shall complete emission testing at one engine per 24 hour period, including voided tests.

(3) Light-duty truck manufacturers shall complete emission testing on a minimum of four vehicles per 24 hour period, including voided tests.

(4) The Administrator may approve a longer period of time for conducting emission tests based upon a request by a manufacturer accompanied by a satisfactory justification.

(h) The manufacturer shall perform test engine or vehicle selection, shipping, preparation, service or mileage accumulation, and testing in such a manner as to insure that the audit is performed in an expeditious manner.

(i) The manufacturer may retest any engines or vehicles tested during a Production Compliance Audit once a compliance level has been established in accordance with § 86.1112–87 based on the first test on each engine or vehicle. The Administrator may approve retesting at other times based upon a request by the manufacturer accompanied by a satisfactory justification. The manufacturer may test each engine or vehicle a total of three times. The manufacturer shall test each engine or vehicle the same number of times. The manufacturer may accumulate additional service or mileage before conducting a retest, subject to the provisions of paragraph (c) of this section.

[50 FR 35388, Aug. 30, 1985, as amended at 62 FR 47123, Sept. 5, 1997]

§ 86.1112–87 Determining the compliance level and reporting of test results.

(a) A manufacturer that has elected to conduct a PCA in accordance with

§ 86.1106–87 may establish the compliance level for a pollutant for any engine or vehicle configuration by using the primary PCA sampling plan or either of two optional reduced PCA sampling plans (the fixed reduced sampling plan or the sequential reduced sampling plan) described below. A manufacturer that uses either of the two optional reduced PCA sampling plans may elect to continue testing and establish a compliance level under the primary PCA sampling plan.

(1) A manufacturer that elects to conduct a PCA for a pollutant using the primary PCA sampling plan shall:

(i) Conduct emission tests on 24 engines or vehicles in accordance with § 86.1111–87 for the pollutants for which the PCA was initiated. If the PCA follows an SEA failure, the number of additional tests conducted shall be the difference between 24 and the number of engines or vehicles tested in the SEA. If 24 or more engines or vehicles were tested in the SEA, no additional tests shall be conducted; and

(ii) Rank the final deteriorated test results, as defined by paragraph (e) of this section, obtained for that pollutant in order from the lowest to the highest value. If the PCA follows an SEA failure, all SEA test results for that pollutant shall be included in this ranking.

(iii) The compliance level for that pollutant is the final deteriorated test result in the sequence determined from table 1 of appendix XII of these regulations.

(2) A manufacturer that elects to conduct a PCA for a pollutant using the fixed reduced PCA sampling plan shall:

(i) Select a sample size between 3 and 23 engines or vehicles. If the PCA follows an SEA failure, the sample size selected cannot be less than the number of engines or vehicles tested during the SEA; and

(ii) Conduct emission tests on the selected sample in accordance with § 86.1111–87 for the pollutants for which the PCA was initiated.

(iii) The compliance level for the pollutant is the result of the following equation, using the test results obtained in paragraph (a)(2)(ii) of this section and all SEA test results for that pollutant if the PCA follows an SEA failure:

$$CL = \bar{X} + Ks$$

Where:

CL = The compliance level.

$\bar{X}$= The mean of the final deteriorated test results, as defined by paragraph (e) of this section.

K = A value that depends on the size of the test sample. See table 2 of appendix XII of this part for the value of K that corresponds to the size of the test sample.

s = The sample standard deviation.

Round the compliance level to the same number of significant figures contained in the applicable standard.

(3) A manufacturer that elects to conduct a PCA for a pollutant using the sequential reduced PCA sampling plan shall perform the following:

(i) Select a sample size of 4, 8, 12, 16 or 20 engines or vehicles. If the PCA follows an SEA failure, the sample size selected cannot be less than the number of engines or vehicles tested during the SEA.

(ii) Conduct emission tests on the selected sample in accordance with § 86.1111–87 for the pollutants for which the PCA was initiated.

(iii) The compliance level for the pollutant is the result of the following equation, using the test results obtained in (a)(3)(ii) and all SEA test results for that pollutant if the PCA follows an SEA failure:

$$CL = \bar{X} + Ks$$

Where:

CL = The compliance level.

$\bar{X}$ = The mean of the final deteriorated test results, as defined by paragraph (e) of this section.

K = A value that depends on the size of the test sample. See table 3 of appendix XII of this part for the value of K that corresponds to the size of the test sample.

s = The sample standard deviation.

Round the compliance level to the same number of significant figures contained in the applicable standard.

(iv) After calculating a compliance level in accordance with paragraph (a)(3)(iii) of this section, a manufacturer may elect to increase the sample size by 4 engines or vehicles, or a multiple thereof, up to the maximum, including SEA engines or vehicles if any, of 20. Upon that election, the manufacturer shall add the additional engines

or vehicles to the sample and perform paragraphs (a)(3)(ii) and (a)(3)(iii) of this section. This election may be repeated if appropriate. A compliance level determined under this election shall replace a previously determined compliance level.

(b) A fail decision is reached with respect to the upper limit when the compliance level determined in paragraph (a) of this section exceeds the applicable upper limit.

(c) Initial test results are calculated following the Federal Test Procedure specified in § 86.1111–87(a).

(d) Final test results are calculated by summing the initial test results derived in paragraph (c) of this section for each test engine or vehicle, dividing by the number of tests conducted on the engine or vehicle, and rounding to the same number of decimal places contained in the applicable standard expressed to one additional significant figure.

(e) Final deteriorated test results. (1) The final deteriorated test results for each heavy-duty engine or light-duty truck tested according to subpart B, I, N, or P of this part are calculated by applying the final test results by the appropriate deterioration factor, derived from the certification process for the engine family control system combination and model year for the selected configuration to which the test engine or vehicle belongs. If the deterioration factor computed during the certification process is multiplicative and it is less than one, that deterioration factor will be one. If the deterioration factor computed during the certification process is additive and it is less than zero, that deterioration factor will be zero.

(2) Round the final deteriorated test results to the same number of significant figures contained in the applicable standard.

(f) A failed engine or vehicle is one whose final deteriorated test results, for one or more of the applicable exhaust pollutants, exceed:

(1) The applicable emission standard, or

(2) The compliance level established in paragraph (b) of this section.

(g) Within five working days after completion of PCA testing of all engines or vehicles, the manufacturer shall submit to the Administrator a report which includes the following information:

(1) The location and description of the manufacturer's emission test facilities which were utilized to conduct testing reported pursuant to this section;

(2) The applicable standards against which the engines or vehicles were tested;

(3) Deterioration factors for the engine family to which the selected configuration belongs;

(4) A description of the engine or vehicle and any emission-related component selection method used;

(5) For each test conducted:

(i) Test engine or vehicle description, including;

(A) Configuration and engine family identification,

(B) Year, make and build date,

(C) Engine or vehicle identification number, and

(D) Number of hours of service accumulated on engine or number of miles on vehicle prior to testing;

(ii) Location where service or mileage accumulation was conducted and description of accumulation procedure and schedule;

(iii) Test number, date, initial test results before and after rounding, final test results and final deteriorated test results for all emission tests, whether valid or invalid, and the reason for invalidation, if applicable;

(iv) A complete description of any modification, repair, preparation, maintenance, and/or testing which was performed on the test engine or vehicle and has not been reported pursuant to any other paragraph of this subpart and will not be performed on all other production engines or vehicles; and

(v) Any other information the Administrator may request relevant to the determination as to whether the new heavy-duty engines or heavy-duty vehicles being manufactured by the manufacturer do in fact conform with the regulations of this subpart; and

(6) The following statement and endorsement:

This report is submitted pursuant to section 206 of the Clean Air Act. This Production Compliance Audit was conducted in

complete conformance with all applicable regulations under 40 CFR part 86 *et seq*. All data and information reported herein is, to the best of

(Company Name)_____'s knowledge, true and accurate. I am aware of the penalties associated with violations of the Clean Air Act and the regulations thereunder.

_____

(Authorized Company Representative)

[50 FR 35388, Aug. 30, 1985, as amended at 81 FR 73981, Oct. 25, 2016]

§ 86.1113–87 Calculation and payment of penalty.

(a) The NCP for each engine or vehicle for which a compliance level has been determined under § 86.1112–87 is calculated according to the formula in paragraph (a)(1) or (a)(2) of this section depending on the value of the compliance level. Each formula contains an annual adjustment factor (AAF_i) which is defined in paragraph (a)(3) of this section. Other terms in the formulas are defined in paragraph (a)(4) of this section.

(1) If the compliance level (CL) is greater than the standard and less than or equal to X (e.g., point CL_1 in figure 1), then:

$$NCP_n = (PR_1)(CL - S)\left(\prod_{i=1}^{n} AAF_i\right)$$

where:

$PR_1 = (F)\ (MC_{50})$

(2) If the compliance level is greater than X and less than or equal to the upper limit as determined by § 86.1104–87 (e.g., point CL_2 in figure 1), then:

$$NCP_n = (COC_{50} + (PR_2)(CL - X))\left(\prod_{i=1}^{n} AAF_i\right)$$

where:

$$PR_2 = \frac{COC_{90} - COC_{50}}{UL - X}$$

(3) AAF_i has the following values:

(i) If $frac_{i-1} = 0$, then $AAF_i = 1 + I_{i-1}$

(ii) If $frac_{i-1} > 0$, then:

$$AAF_i = 1 + I_{i-1} + A_i\left[\frac{1}{1 - frac_{i-1}}\right]^i$$

Figure 1

Penalty vs. Compliance Level

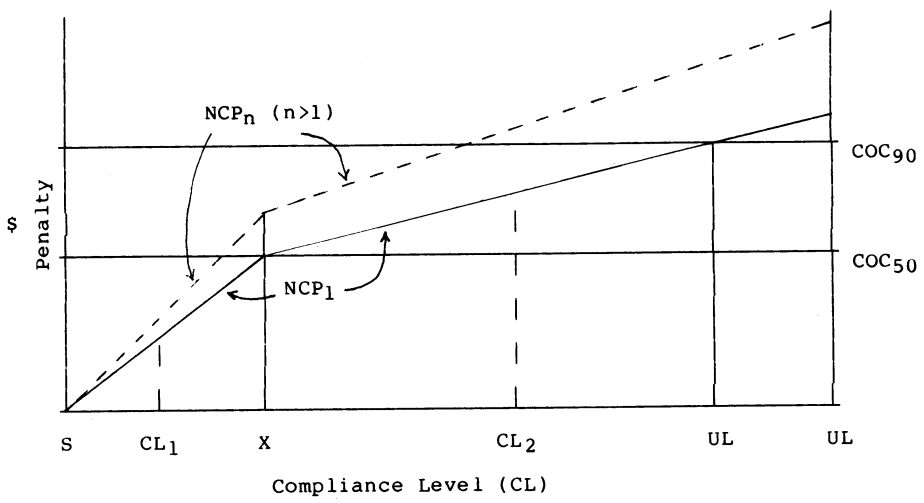

If $frac_{i-1}$ >0.50, then $frac_{i-1}$ will be set equal to 0.50.

(iii) $AAF_1 = 1$

(iv) In calculating the NCP for year n, the value $frac_{i-1}$ for i = n will include actual NCP usage through March 31 of model year n–1 and EPA's estimate of additional usage for the remainder of model year n-1 using manufacturer input. All manufacturers using NCPs must report by subclass actual NCP and non-NCP production numbers through March 31, an estimate of NCP and non-NCP production for the remainder of the model year, and the previous year's actual NCP and non-NCP production to EPA no later than April 30 of the model year. If EPA is unable to obtain similar information from manufacturers not using NCPs, EPA will use projected sales data from the manufacturers' application for certification in computing the total production of the subclass and the $frac_{i-1}$. The value of $frac_{i-1}$ will be corrected to reflect actual year-end usage of NCPs and a corrected AAF will be used to establish NCPs in future years. The correction of previous year's AAF will not affect the previous year's penalty.

(4) The terms in the above formulas have the following meanings and values, which may be determined separately for each subclass and pollutant for which an NCP is offered. The production of Federal and California designated engines or vehicles shall be combined for the purpose of this section in calculating the NCP for each engine or vehicle.

NCP_n = NCP for year n for each applicable engine or vehicle

CL = Compliance level for year n for applicable engines or vehicles

S = Emission standard

UL = Upper limit as determined by section 86.1104–87, except that, if the upper limit is determined by section 86.1104–87(c), the value of UL in paragraph (a)(2) of this section shall be the prior emission standard for that pollutant.

UL′ = Upper limit as determined by section 86.1104–87(c). This value is not used in the above formulas.

X = Compliance level above the standard at which NCP_1 equals COC_{50}

$$X = \frac{COC_{50}}{(F)(MC_{50})} + S$$

PR_1 = Penalty rate when CL ≤X
PR_2 = Penalty rate when X <CL ≤applicable upper limit

$$\prod_{i=1}^{n} AAF_i = \text{Running product, i.e., } (AAF_1)\times(AAF_2)\times\cdots\times(AAF_n)$$

i = An index representing a year. It represents the same year for both Federal and California designated engines or vehicles of the same production model year.
n = Index representing the number of model years for which the NCP has been available for an engine or vehicle subclass (i.e., n = 1 for the first year that the NCP is available, and so on until n = n for the nth year that the NCP is available). The factor ''n'' is based on the model year the NCP is first available, as specified in section 86.1105–87 for the engine or vehicle subclass and pollutant for both Federal and California designated engines and vehicles.
COC_{50} = Estimate of the average total incremental cost to comply with the standard relative to complying with the upper limit.
COC_{90} = Estimate of the 90th percentile total incremental cost to comply with the standard relative to complying with the upper limit.
MC_{50} = Estimate of the average marginal cost of compliance (dollars per emission unit) with the standard.
F = Factor used to estimate the 90th percentile marginal cost based on the average marginal cost (the minimum value of F is 1.1, the maximum value of F is 1.3).
AAF_i = Annual adjustment factor for year i, $frac_{i-1}$ = Fraction of engines or vehicles of a subclass using NCPs in previous year (year i-1).
A_i = Usage adjustment factor in year i: A_i = 0.10 for i = 2; A_i = 0.08 for i<2.
I_i = Percentage increase in overall consumer price index in year i.

(5) The values of COC_{50}, COC_{90}, MC_{50} and F will be determined for each applicable subclass by EPA based on the cost data used by EPA in setting the applicable emission standard. However, where the rulemaking to establish a specific NCP occurs after the rulemaking to establish the standard, EPA may augment the data base used to establish the standard by including the best cost and emission performance data available to EPA during the specific NCP rulemaking.

(6) In calculating the NCP, appropriate values of the following predefined terms should be used: CL, S, UL, F, and A_i. For all other terms, unrounded values of at least five figures beyond the decimal point should be used in calculations leading up to the penalty amount. Any NCP calculated under paragraph (a) of this section will be rounded to the nearest dollar.

(b) The NCP determined in paragraph (a) of this section is assessed against all those engines or vehicles of the nonconforming configuration or engine family produced at all assembly plants and distributed into commerce—

(1) Since the beginning of the model year in the case of a certification failure described by § 86.1106–87(a).

(2) Beginning ten days after an SEA failure described by § 86.1106–87 (b) or (c).

(3) Following implementation of a production running change described by § 86.1106–87(d).

(c) The NCP will continue to be assessed during the model year, until such time, if any, that the configuration or engine family is brought into conformance with applicable emission standards.

(d) A manufacturer may carry over an NCP from a model year to the next model year. There is no limit to the number of years that carryover can continue. The amount of the penalty will increase each year according to paragraph (a) of this section.

(e) The Administrator shall notify the manufacturer in writing of the nonconformance penalty established under paragraph (a) of this section after the completion of the PCA under § 86.1112–87.

(f) A manufacturer may request a hearing under 40 CFR part 1068, subpart G, as to whether the compliance level (including a compliance level in excess of the upper limit) was determined properly.

(g)(1) Except as provided in paragraph (g)(2) of this section, the nonconformance penalty or penalties assessed under this subpart must be paid as follows:

(i) By the quarterly due dates, *i.e.*, within 30 days of the end of each calendar quarter (March 31, June 30, September 30 and December 31), or according to such other payment schedule as the Administrator may approve pursuant to a manufacturer's request, for all nonconforming engines or vehicles produced by a manufacturer in accordance with paragraph (b) of this section and distributed into commerce for that quarter.

(ii) The penalty shall be payable to U.S. Environmental Protection Agency, NCP Fund, Motor Vehicle and Engine Compliance Program, P.O. Box 979032 St. Louis, MO 63197–9000. Note on the check and supporting information that this is an NCP payment.

(2) When a manufacturer has requested a hearing under § 86.1115–87, it must pay the nonconformance penalty, and any interest, within ten days after the Presiding Officer renders his decision, unless the manufacturer first files a notice of intention to appeal to the Administrator pursuant to § 86.1115–87(t)(1), or, if an appeal of the Presiding Officer's decision is taken, within ten days after the Administrator renders his decision, unless the manufacturer first files a petition for judicial review.

(3) A manufacturer making payment under paragraph (g)(1) or (2) of this section shall submit the following information by each quarterly due date to the Designated Compliance Officer (*see* 40 CFR 1036.801). This information shall be submitted even if a manufacturer has no NCP production in a given quarter.

(i) Corporate identification, identification and quantity of engines or vehicles subject to the NCP, certificate identification (number and date), NCP payment calculations and interest payment calculations, if applicable.

(ii) The following statement and endorsement:

This information is submitted pursuant to section 206 of the Clean Air Act. All information reported herein is, to the best of

_____'s
(Company name)

knowledge, true and accurate. I am aware of the penalties associated with violations of the Clean Air Act and the regulations thereunder.

_____
(Authorized Company Representative)

(4) The Administrator may verify the production figures or other documentation submitted under paragraph (g)(3) of this section.

(5)(i) Interest shall be assessed on any nonconformance penalty for which payment has been withheld under § 86.113–87(g) (1) or (2). Interest shall be calculated from the due date for the first quarterly NCP payment, as determined under § 86.1113–87(g)(1), until either the date on which the Presiding Officer or the Administrator renders the final decision of the Agency under § 86.1115–87 or the date when an alternate payment schedule (approved pursuant to § 86.1113–87(g)(1)) ends.

(ii) The combined principal plus interest on each quarterly NCP payment withheld pursuant to § 86.1113–87(g) (1) or (2) shall be calculated according to the formula:

$$QNCP(1 + R).25n$$

where:

QNCP = the quarterly NCP payment

R = the interest rate applicable to that quarter

n = the number of quarters for which the quarterly NCP payment is outstanding.

(iii) The number of quarters for which payment is outstanding for purposes of this paragraph shall be the number of quarterly NCP payment due dates, as determined under § 86.1113–87(g)(1), which have elapsed throughout the duration of a hearing request, or alternate payment schedule.

(iv) The interest rate applicable to a quarter for purposes of this paragraph shall be the rate published by the Secretary of the Treasury pursuant to the Debt Collection Act of 1982 and effective on the date on which the NCP payment was originally due.

(6) A manufacturer will be refunded an overpayment, or be permitted to offset an overpayment by withholding a future payment, if approved in advance by the Administrator. The government shall pay no interest on overpayments.

(h) A manufacturer that certifies as a replacement for the nonconforming configuration, a configuration that is in conformance with applicable standards, and that performs a production compliance audit (PCA) in accordance with § 86.1112–87(a) that results in a compliance level below the applicable standard, will be eligible to receive a refund of a portion of the engineering and development component of the penalty. The engineering and development component will be determined by multiplying the base penalty amount by the engineering and development factor for the appropriate subclass and pollutant in § 86.1105–87. The amount refunded will depend on the model year in which the certification and PCA take place. In cases where payment of penalties have been waived by EPA in accordance with paragraph (g)(1)(iii) of this section, EPA will refund a portion of the engineering and development component. The proportionate refund to be paid by EPA will be based on the proportion of vehicles or engines of the nonconforming configuration for which NCPs were paid to EPA. The refund is calculated as follows:

$$R_{tot} = D_n \times F_{E\&D} \times NCP_1 \times Prod_{tot}$$

$$R_{Cal} = (Prod_{Cal}/Prod_{tot}) \times (R_{tot})$$

$$R_{EPA} = R_{tot} - R_{Cal}$$

Where:

n = index representing the number of model years for which the NCP has been available for an engine or vehicle subclass (i.e., n = 1 for the first year that NCPs are available, . . . , n = n for the nth year the NCPs are available; same as ''n'' in paragraph (a)(4)).

D_n = discount factor depending on the number of model years (n) for which NCPs were available at the time of certification and PCA of the replacement configuration, and its value is as follows:

$D_1 = 0.90$
$D_2 = 0.79$
$D_3 = 0.67$
$D_4 = 0.54$
$D_5 = 0.39$
$D_6 = 0.23$
$D_7 = 0.05$
$D_n = 0.00$ for n = 8 or larger

$F_{E\&D}$ = the engineering and development factor specified in section 86.1105–87 for the appropriate subclass and pollutant

NCP_1 = the penalty for each engine or vehicle during the first (base) year the NCP is available as calculated in paragraph (a)

$Prod_{tot}$ = total number of engines or vehicles produced in the subclass for which NCPs were paid to EPA or to the State of California

$Prod_{Cal}$ = number of engines or vehicles in the subclass demonstrated to have been titled, registered or principally used in the State of California and for which NCPs were paid to the State of California under paragraph (g)(1)

R_{tot} = Total refund due to the manufacturer for the engineering and development component of the NCP

R_{Cal} = Refund due to the manufacturer from the State of California for the engineering and development component of the NCP

R_{EPA} = Refund due to the manufacturer from EPA for the engineering and development component of the NCP.

[50 FR 35388, Aug. 30, 1985, as amended at 50 FR 53467, Dec. 31, 1985; 53 FR 19134, May 26, 1988; 55 FR 46629, Nov. 5, 1990; 61 FR 51366, Oct. 2, 1996; 77 FR 54402, Sept. 5, 2012; 81 FR 73981, Oct. 25, 2016]

§ 86.1114–87 Suspension and voiding of certificates of conformity.

(a) The certificate of conformity is suspended with respect to any engine or vehicle failing pursuant to paragraph (f) of § 86.1112–87 effective from the time that a fail decision is made for that engine or vehicle.

(b) Once a certificate has been suspended for a failed engine or vehicle as provided for in paragraph (a) of this section, the manufacturer shall take the following actions:

(1) Before the certificate is reinstated for that failed engine or vehicle,

(i) Remedy the nonconformity, and

(ii) Demonstrate that the engine or vehicle conforms to the applicable standards or compliance levels by retesting the engine or vehicle in accordance with these regulations; and

(2) Submit a written report to the Administrator within five working days after successful completion of testing on the failed engine or vehicle, which contains a description of the remedy and test results for each engine

or vehicle in addition to other information that may be required by this regulation.

(c) The Administrator may suspend the certificate of conformity if the manufacturer, after electing to conduct a PCA, fails to adhere to the requirements stated in § 86.1106–87(b)(3), (b)(6)(iii), (c)(2), or (c)(5)(iii).

(d) The Administrator may suspend the qualified certificate of conformity issued under the conditions specified in § 86.1106–87 if the manufacturer fails to adhere to the requirements stated in § 86.1106–87(a)(3), (a)(4)(iii), (d)(2)(iii), or (d)(3).

(e) The Administrator may suspend the certificate of conformity or the qualified certificate of conformity if the compliance level as determined in § 86.1112–87(a) is in excess of the upper limit.

(f) The Administrator may void the certificate of conformity if the compliance level as determined in § 86.1112–87(a) is in excess of the upper limit and the manufacturer fails to recall any engines or vehicles introduced into commerce pursuant to § 86.1106–87(a)(4)(ii), (b)(6)(ii), (c)(5)(ii) or (d)(2)(ii).

(g) The Administrator may void the certificate of conformity for those engines or vehicles for which the manufacturer fails to meet the requirements of § 86.1106–87(a)(4)(i), (b)(6)(i), (c)(5)(i), or (d)(2)(i).

(h) The Administrator shall notify the manufacturer in writing of any suspension or voiding of a certificate of conformity in whole or in part, except as provided for in paragraph (a) of this section.

(i) A certificate of conformity suspended or voided under paragraph (c), (d), (e), (f) or (g) of this section may be reinstated after a written request by the manufacturer and under such terms and conditions as the Administrator may require and after the manufacturer demonstrates compliance with applicable requirements.

(j) After the Administrator suspends or voids a certificate of conformity pursuant to this section or notifies a manufacturer of his intent to suspend or void a certificate of conformity under § 86.087–30(e), and prior to the commencement of a hearing, if any, under § 86.1115–87, if the manufacturer demonstrates to the Administrator's satisfaction that the decision to suspend or void the certificate was based on erroneous information, the Administrator shall reinstate the certificate.

§ 86.1115–87 Hearing procedures for nonconformance determinations and penalties.

The provisions of 40 CFR part 1068, subpart G, apply if a manufacturer requests a hearing regarding penalties under this subpart.

[81 FR 73981, Oct. 25, 2016]

§ 86.1116–87 Treatment of confidential information.

(a) Any manufacturer may assert that some or all of the information submitted pursuant to this subpart is entitled to confidential treatment as provided by 40 CFR part 2, subpart B.

(b) Any claim of confidentiality must accompany the information at the time it is submitted to EPA.

(c) To assert that information submitted pursuant to this subpart is confidential, a manufacturer must indicate clearly the items of information claimed confidential by marking, circling, bracketing, stamping, or otherwise specifying the confidential information. Furthermore, EPA requests, but does not require, that the submitter also provide a second copy of its submittal from which all confidential information has been deleted. If a need arises to publicly release nonconfidential information, EPA will assume that the submitter has accurately deleted the confidential information from this second copy.

(d) If a claim is made that some or all of the information submitted pursuant to this subpart is entitled to confidential treatment, the information covered by that confidentiality claim will be disclosed by the Environmental Appeals Board only to the extent and by means of the procedures set forth in part 2, subpart B, of this chapter.

(e) Information provided without a claim of confidentiality at the time of submission may be made available to the public by EPA without further notice to the submitter, in accordance with 40 CFR 2.204(c)(2)(i)(A).

[50 FR 34798, Aug. 27, 1985, as amended at 57 FR 5334, Feb. 13, 1992]

Subpart M [Reserved]

Subpart N—Exhaust Test Procedures for Heavy-duty Engines

AUTHORITY: Secs. 202, 206, 207, 208, 301(a), Clean Air Act as amended 42 U.S.C. 7521, 7524, 7541, 7542, and 7601.

SOURCE: 48 FR 52210, Nov. 16, 1983, unless otherwise noted.

§ 86.1301 Scope; applicability.

This subpart specifies gaseous emission test procedures for Otto-cycle and diesel heavy-duty engines, and particulate emission test procedures for diesel heavy-duty engines.

[81 FR 73981, Oct. 25, 2016]

§ 86.1302–84 Definitions.

The definitions in § 86.084–2 apply to this subpart.

§ 86.1303–84 Abbreviations.

The abbreviations in § 86.084–3 apply to this subpart.

§ 86.1304 Section numbering; construction.

(a) *Section numbering*. The model year of initial applicability is indicated by the section number. The digits following the hyphen designate the first model year for which a section is applicable. The section continues to apply to subsequent model years unless a later model year section is adopted. (Example: § 86.13xx–2004 applies to the 2004 and subsequent model years. If a § 86.13xx–2007 is promulgated it would apply beginning with the 2007 model year; § 86.13xx–2004 would apply to model years 2004 through 2006.)

(b) A section reference without a model year suffix refers to the section applicable for the appropriate model year.

[65 FR 59958, Oct. 6, 2000. Redesignated and amended at 70 FR 40438, July 13, 2005]

§ 86.1305 Introduction; structure of subpart.

(a) This subpart specifies the equipment and procedures for performing exhaust-emission tests on Otto-cycle and diesel-cycle heavy-duty engines. Subpart A of this part sets forth the emission standards and general testing requirements to comply with EPA certification procedures.

(b) Use the applicable equipment and procedures for spark-ignition or compression-ignition engines in 40 CFR part 1065 to determine whether engines meet the duty-cycle emission standards in subpart A of this part. Measure the emissions of all regulated pollutants as specified in 40 CFR part 1065. Use the duty cycles and procedures specified in §§ 86.1333, 86.1360, and 86.1362. Adjust emission results from engines using aftertreatment technology with infrequent regeneration events as described in § 86.004–28.

(c) The provisions in §§ 86.1370 and 86.1372 apply for determining whether an engine meets the applicable not-to-exceed emission standards.

(d) Measure smoke using the procedures in subpart I of this part for evaluating whether engines meet the smoke standards in subpart A of this part.

(e) Use the fuels specified in 40 CFR part 1065 to perform valid tests, as follows:

(1) For service accumulation, use the test fuel or any commercially available fuel that is representative of the fuel that in-use engines will use.

(2) For diesel-fueled engines, use the ultra low-sulfur diesel fuel specified in 40 CFR part 1065 for emission testing.

(3) For gasoline-fueled engines, use the appropriate E10 fuel specified in 40 CFR part 1065; however, through model year 2021 you may instead use the appropriate E0 fuel specified in 40 CFR part 1065, with the exception that the E0 fuel must have sulfur concentration between 0.0015 and 0.008 weight percent and research octane of at least 93. Starting in model year 2022, you may certify up to 5 percent of your nationwide sales volume of engines certified under subpart A of this part in a given model year based on this E0 test fuel if those engines are certified with carryover data.

(f) You may use special or alternate procedures to the extent we allow them under 40 CFR 1065.10. In addition, for 2010 and earlier model year engines, you may use modified test procedures as needed to conform to the procedures

that were specified at the time of emission testing for the model year in question.

(g) This subpart applies to you as a manufacturer, and to anyone who does testing for you.

(h) For testing conducted with engines installed in vehicles, including field testing conducted to measure emissions under Not-To-Exceed test procedures, use the test procedures and equipment specified in 40 CFR part 1065, subpart J.

(i) You may disable any AECDs that have been approved solely for emergency vehicle applications under paragraph (4) of the definition of ''Defeat device'' in § 86.004–2. The emission standards do not apply when any of these AECDs are active.

[79 FR 23703, Apr. 28, 2014, as amended at 79 FR 46371, Aug. 8, 2014]

§ 86.1333 Transient test cycle generation.

(a) *Generating transient test cycles.* The heavy-duty transient engine cycles for Otto-cycle and diesel engines are listed in appendix I((f) (1), (2) and (3)) to this part. These second-by-second listings represent torque and rpm maneuvers characteristic of heavy-duty engines. Both rpm and torque are normalized (expressed as a percentage of maximum) in these listings.

(1) To unnormalize rpm, use the following equations:

(i) For diesel engines:

$$Actual\ rpm = \frac{\%rpm \cdot (Max\ Test\ Speed - Curb\ Idle\ Speed)}{112} + Curb\ Idle\ Speed$$

Where:

Max Test Speed = the maximum test speed as calculated in 40 CFR part 1065.

(ii) For Otto-cycle engines:

$$Actual\ rpm = \frac{\%rpm \cdot (Max\ Test\ Speed - Curb\ Idle\ Speed)}{100} + Curb\ Idle\ Speed$$

Where:

Max Test Speed = the maximum test speed as calculated in 40 CFR part 1065.

(2) Torque is normalized to the maximum torque at the rpm listed with it. Therefore, to unnormalize the torque values in the cycle, the maximum torque curve for the engine in question must be used. The generation of the maximum torque curve is described in 40 CFR part 1065.

(b) *Example of the unnormalization procedure.* Unnormalize the following test point, given Maximum Test speed = 3800 rpm and Curb Idle Speed = 600 rpm.

PercentRPM	PercentTorque
43	82

(1) Calculate actual rpm:

$$\text{Actualrpm} = \frac{43 \cdot (3800 - 600)}{112} + 600 = 1{,}829\text{rpm}$$

(2) Determine actual torque: Determine the maximum observed torque at 1829 rpm from the maximum torque curve. Then multiply this value (e.g., 358 ft-lbs) by 0.82. This results in an actual torque of 294 ft-lbs.

(c) *Clutch operation.* Manual transmission engines may be tested with a

clutch. If used, the clutch shall be disengaged at all zero percent speeds, zero percent torque points, but may be engaged up to two points preceding a non-zero point, and may be engaged for time segments with zero percent speed and torque points of durations less than four seconds.

(d) Determine idle speeds as specified in 40 CFR 1065.510.

[70 FR 40438, July 13, 2005, as amended at 73 FR 37192, June 30, 2008; 79 FR 23704, Apr. 28, 2014]

§ 86.1360 Supplemental emission test; test cycle and procedures.

The test procedures of this subpart N apply for supplemental emission testing, except as specified otherwise in this section.

(a) *Applicability*. This section applies to 2007 and later diesel heavy duty engines.

(b) *Test cycle*. (1) Perform testing as described in § 86.1362 for determining whether an engine meets the applicable standards when measured over the supplemental emission test.

(2) For engines not certified to a NO_X standard or FEL less than 1.5 g/bhp-hr, EPA may select, and require the manufacturer to conduct the test using, up to three discrete test points within the control area defined in paragraph (d) of this section. EPA will notify the manufacturer of these supplemental test points in writing in a timely manner before the test. Emission sampling for these discrete test modes must include all regulated pollutants except particulate matter.

(3) For engines certified using the ramped-modal cycle specified in § 86.1362, perform the three discrete test points described in paragraph (b)(2) of this section as follows:

(i) Allow the engine to idle as needed to complete equipment checks following the supplemental emission test described in this section, then operate the engine over the three additional discrete test points.

(ii) Validate the additional discrete test points as a composite test separate from the supplemental emission test, but in the same manner.

(iii) Use the emission data collected during the time interval from 35 to 5 seconds before the end of each mode (excluding transitions) to perform the MAEL calculations in paragraph (f) of this section.

(c) The engine speeds A, B and C, referenced in the table in paragraph (b)(1) of this section, must be determined as follows:

$$\text{Speed A} = n_{lo} + 0.25 \times (n_{hi} - n_{lo})$$
$$\text{Speed B} = n_{lo} + 0.50 \times (n_{hi} - n_{lo})$$
$$\text{Speed C} = n_{lo} + 0.75 \times (n_{hi} - n_{lo})$$

Where: n_{hi} = High speed as determined by calculating 70% of the maximum power. The highest engine speed where this power value occurs on the power curve is defined as n_{hi}.

n_{lo} = Low speed as determined by calculating 50% of the maximum power. The lowest engine speed where this power value occurs on the power curve is defined as n_{lo}.

Maximum power = the maximum observed power calculated according to the engine mapping procedures defined in 40 CFR 1065.510.

(d) *Determining the control area*. The control area extends from the engine speed A to C, as defined in paragraph (c) of this section, and extends from 25 to 100 percent load.

(e) [Reserved]

(f) *Maximum allowable emission limits*. (1) For gaseous emissions, the 12 non-idle test point results and the four-point linear interpolation procedure specified in paragraph (g) of this section for intermediate conditions, shall define Maximum Allowable Emission Limits for purposes of § 86.007–11(a)(3) except as modified under paragraph (f)(3) of this section. Each engine shall have it's own Maximum Allowable Emission Limits generated from the 12 non-idle supplemental steady state test points from that engine. The control area extends from the 25% to the 75% engine speeds, at engine loads of 25% to 100%, as defined in paragraph (d) of this section. Figure 1 of this paragraph (f)(1) depicts a sample Maximum Allowable Emission Limit curve, for illustration purposes only, as follows:

Figure 1

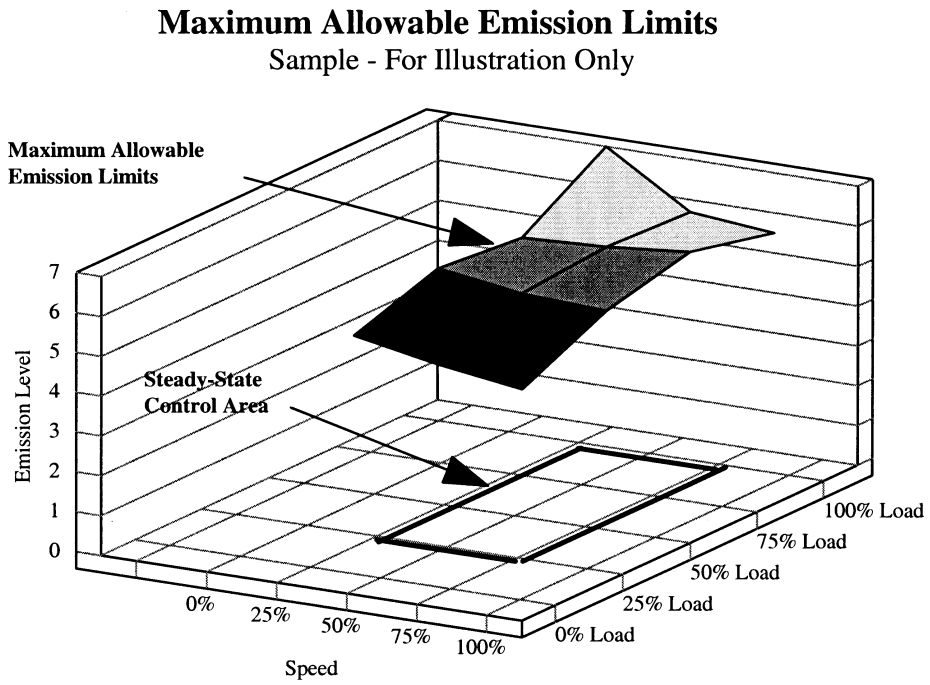

(2) If the weighted average emissions, calculated according to paragraph (e)(6) of this section, for any gaseous pollutant is equal to or lower than required by §86.007–11(a)(3), each of the 13 test values for that pollutant shall first be multiplied by the ratio of the applicable emission standard (under §86.007–11(a)(3)) to the weighted average emissions value, and then by 1.10 for interpolation allowance, before determining the Maximum Allowable Emission Limits under paragraph (f)(1) of this section.

(3) If the Maximum Allowable Emission Limit for any point, as calculated under paragraphs (f)(1) and (2) of this section, is greater than the applicable Not-to-Exceed limit (if within the Not-to-Exceed control area defined in §86.1370(b)), then the Maximum Allowable Emission Limit for that point shall be defined as the applicable Not-to-Exceed limit.

(g) *Calculating intermediate test points.* (1) For the three test points selected by EPA under paragraph (b)(2) of this section, the emissions must be measured and calculated as described in paragraph (e)(6)(i) of this section (except that n = 1 and WF = 1). The measured values then must be compared to the interpolated values according to paragraph (g)(3) of this section. The interpolated values are determined from the modes of the test cycle closest to the respective test point according to paragraph (g)(2) of this section.

(2) Interpolating emission values from the test cycle. The gaseous emissions for each regulated pollutant for each of the control points (Z) must be interpolated from the four closest modes of the test cycle that envelop

the selected control point Z as shown in Figure 2 of this paragraph (g)(2).

(i) For these modes (R, S, T, U), the following definitions apply:

(A) Speed (R) = Speed(T) = n_{RT}.

(B) Speed (S) = Speed(U) = n_{SU}.

(C) Per cent load (R) = Per cent load (S).

(D) Per cent load (T) = Per cent load (U).

(ii) The interpolated value of the brake specific gaseous emissions of the selected control point Z(EZ) must be calculated as follows:

$$E_Z = E_{RS} + (E_{TU} - E_{RS}) * (M_Z - M_{RS}) / (M_{TU} - M_{RS})$$

$$E_{TU} = E_T + (E_U - E_T) * (n_Z - n_{RT}) / (n_{SU} - n_{RT})$$

$$E_{RS} = E_R + (E_S - E_R) * (n_Z - n_{RT}) / (n_{SU} - n_{RT})$$

$$M_{TU} = M_T + (M_U - M_T) * (n_Z - n_{RT}) / (n_{SU} - n_{RT})$$

$$M_{RS} = M_R + (M_S - M_R) * (n_Z - n_{RT}) / (n_{SU} - n_{RT})$$

Where:

E_R, E_S, E_T, E_U = for each regulated pollutant, brake specific gaseous emissions of the enveloping modes adjusted according to the factors in(f)(2).

M_R, M_S, M_T, M_U = engine torque of the enveloping modes.

M_Z = engine torque of the selected control point Z.

n_Z = engine speed of the selected control point Z.

(iii) Figure 2 follows:

Figure 2
Four-Point Linear Interpolation

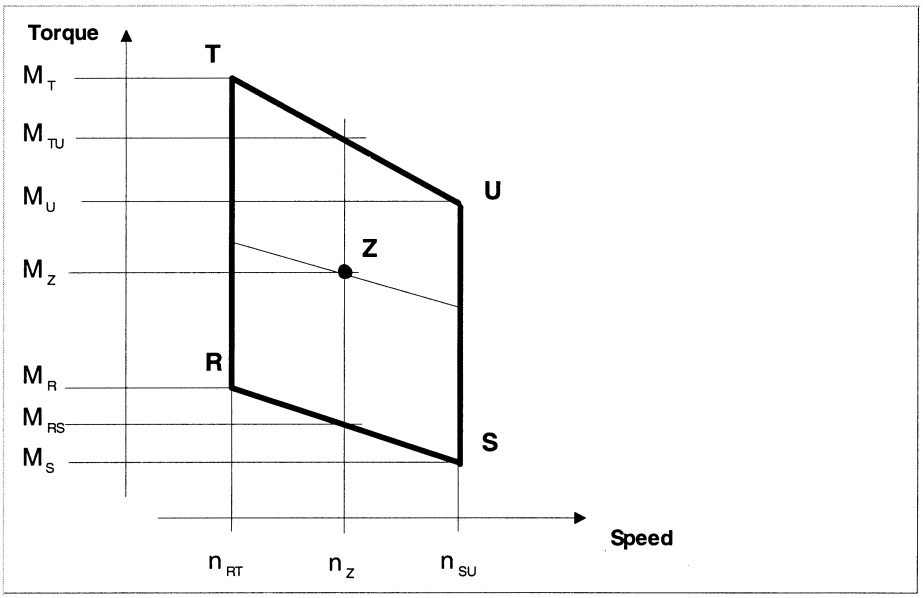

(3) *Comparing calculated and interpolated emission values.* The measured brake specific gaseous emissions of the control point Z (X_Z) must be less than or equal to the interpolated value (E_Z).

[65 FR 59958, Oct. 6, 2000, as amended at 66 FR 5188, Jan. 18, 2001; 70 FR 40439, July 13, 2005; 71 FR 51487, Aug. 30, 2006; 73 FR 37192, June 30, 2008. Redesignated and amended at 79 FR 23704, Apr. 28, 2014]

§ 86.1362 Steady-state testing with a ramped-modal cycle.

This section describes how to test engines under steady-state conditions.

(a) Measure emissions by testing the engine on a dynamometer with the following ramped-modal duty cycle to determine whether it meets the applicable steady-state emission standards:

RMC mode	Time in mode (seconds)	Engine speed [1 2]	Torque (percent) [2 3]	CO_2 weighting (percent) [4]
1a Steady-state	170	Warm Idle	0	6
1b Transition	20	Linear Transition	Linear Transition.	
2a Steady-state	173	A	100	9
2b Transition	20	Linear Transition	Linear Transition.	
3a Steady-state	219	B	50	10
3b Transition	20	B	Linear Transition.	
4a Steady-state	217	B	75	10
4b Transition	20	Linear Transition	Linear Transition.	
5a Steady-state	103	A	50	12
5b Transition	20	A	Linear Transition.	
6a Steady-state	100	A	75	12
6b Transition	20	A	Linear Transition.	
7a Steady-state	103	A	25	12
7b Transition	20	Linear Transition	Linear Transition.	
8a Steady-state	194	B	100	9
8b Transition	20	B	Linear Transition.	
9a Steady-state	218	B	25	9
9b Transition	20	Linear Transition	Linear Transition.	
10a Steady-state	171	C	100	2
10b Transition	20	C	Linear Transition.	
11a Steady-state	102	C	25	1
11b Transition	20	C	Linear Transition.	
12a Steady-state	100	C	75	1
12b Transition	20	C	Linear Transition.	
13a Steady-state	102	C	50	1
13b Transition	20	Linear Transition	Linear Transition.	
14 Steady-state	168	Warm Idle	0	6

[1] Speed terms are defined in 40 CFR part 1065.
[2] Advance from one mode to the next within a 20-second transition phase. During the transition phase, command a linear progression from the speed or torque setting of the current mode to the speed or torque setting of the next mode.
[3] The percent torque is relative to maximum torque at the commanded engine speed.
[4] Use the specified weighting factors to calculate composite emission results for CO_2 as specified in 40 CFR 1036.501.

(b) Perform the ramped-modal test as described in 40 CFR part 1065.

(c) For 2007 through 2010 model years, manufacturers may follow the mode order described in this paragraph (c) instead of the mode order specified in paragraph (a) of this section. Any EPA testing with these engines will rely on the same procedure used by the manufacturer for certification.

RMC Mode	Time in mode (seconds)	Engine speed [1 2]	Torque (percent) [2 3]
1a Steady-state	170	Warm Idle	0.
1b Transition	20	Linear Transition	Linear Transition.
2a Steady-state	170	A	100.
2b Transition	20	A	Linear Transition.
3a Steady-state	102	A	25.
3b Transition	20	A	Linear Transition.
4a Steady-state	100	A	75.
4b Transition	20	A	Linear Transition.
5a Steady-state	103	A	50.
5b Transition	20	Linear Transition	Linear Transition.
6a Steady-state	194	B	100.
6b Transition	20	B	Linear Transition.
7a Steady-state	219	B	25.
7b Transition	20	B	Linear Transition.
8a Steady-state	220	B	75.
8b Transition	20	B	Linear Transition.
9a Steady-state	219	B	50.
9b Transition	20	Linear Transition	Linear Transition.
10a Steady-state	171	C	100.
10b Transition	20	C	Linear Transition.

RMC Mode	Time in mode (seconds)	Engine speed [1 2]	Torque (percent) [2 3]
11a Steady-state	102	C	25.
11b Transition	20	C	Linear Transition.
12a Steady-state	100	C	75.
12b Transition	20	C	Linear Transition.
13a Steady-state	102	C	50.
13b Transition	20	Linear Transition	Linear Transition.
14 Steady-state	168	Warm Idle	0.

[1] Speed terms are defined in 40 CFR part 1065.
[2] Advance from one mode to the next within a 20-second transition phase. During the transition phase, command a linear progression from the speed or torque setting of the current mode to the speed or torque setting of the next mode.
[3] The percent torque is relative to maximum torque at the commanded engine speed.

[79 FR 23704, Apr. 28, 2014, as amended at 81 FR 73981, Oct. 25, 2016]

§ 86.1370 Not-To-Exceed test procedures.

(a) *General*. The purpose of this test procedure is to measure in-use emissions of heavy-duty diesel engines while operating within a broad range of speed and load points (the Not-To-Exceed Control Area) and under conditions which can reasonably be expected to be encountered in normal vehicle operation and use. Emission results from this test procedure are to be compared to the Not-To-Exceed Limits specified in § 86.007–11(a)(4), or to later Not-To-Exceed Limits. The Not-To-Exceed Limits do not apply for engine-starting conditions. Tests conducted using the procedures specified in this subpart are considered valid Not-To-Exceed tests (Note: duty cycles and limits on ambient conditions do not apply for Not-To-Exceed tests).

(b) *Not-to-exceed control area for diesel heavy-duty engines*. The Not-To-Exceed Control Area for diesel heavy-duty engines consists of the following engine speed and load points:

(1) All operating speeds greater than the speed calculated using the following formula, where n_{hi} and n_{lo} are determined according to the provisions in § 86.1360(c):

$$n_{lo} + 0.15 \times (n_{hi} - n_{lo})$$

(2) All engine load points greater than or equal to 30% or more of the maximum torque value produced by the engine.

(3) Notwithstanding the provisions of paragraphs (b)(1) and (2) of this section, all operating speed and load points with brake specific fuel consumption (BSFC) values within 5% of the minimum BSFC value of the engine. For the purposes of this requirement, BFSC must be calculated under the general test cell conditions specified in 40 CFR part 1065. The manufacturer may petition the Administrator at certification to exclude such points if the manufacturer can demonstrate that the engine is not expected to operate at such points in normal vehicle operation and use. Engines equipped with drivelines with multi-speed manual transmissions or automatic transmissions with a finite number of gears are not subject to the requirements of this paragraph (b)(3).

(4) Notwithstanding the provisions of paragraphs (b)(1) through (b)(3) of this section, speed and load points below 30% of the maximum power value produced by the engine shall be excluded from the Not-To-Exceed Control Area for all emissions.

(5) [Reserved]

(6)(i) For petroleum-fueled diesel cycle engines, the manufacturer may identify particular engine-vehicle combinations and may petition the Administrator at certification to exclude operating points from the Not-to-Exceed Control Area defined in paragraphs (b)(1) through (5) of this section if the manufacturer can demonstrate that the engine is not capable of operating at such points when used in the specified engine-vehicle combination(s).

(ii) For diesel cycle engines that are not petroleum-fueled, the manufacturer may petition the Administrator at certification to exclude operating points from the Not-to-Exceed Control Area defined in paragraphs (b)(1) through (5) of this section if the manufacturer can demonstrate that the engine is not expected to operate at such

points in normal vehicle operation and use.

(7) Manufacturers may petition the Administrator to limit NTE testing in a single defined region of speeds and loads. Such a defined region must generally be of elliptical or rectangular shape, and must share some portion of its boundary with the outside limits of the NTE zone. Under this provision testing would not be allowed with sampling periods in which operation within that region constitutes more than 5.0 percent of the time-weighted operation within the sampling period. Approval of this limit by the Administrator is contingent on the manufacturer satisfactorily demonstrating that operation at the speeds and loads within that region accounts for less than 5.0 percent of all in-use operation (weighted by vehicle-miles-traveled or other EPA-approved weightings) for the in-use engines of that configuration (or sufficiently similar engines). At a minimum, this demonstration must include operational data from representative in-use vehicles.

(c) [Reserved]

(d) *Not-to-exceed control area limits.* (1) When operated within the Not-To-Exceed Control Area defined in paragraph (b) of this section, diesel engine emissions shall not exceed the applicable Not-To-Exceed Limits specified in § 86.007–11(a)(4) when averaged over any time period greater than or equal to 30 seconds, except where a longer minimum averaging period is required by paragraph (d)(2) of this section.

(2) For engines equipped with emission controls that include discrete regeneration events and that send a recordable electronic signal indicating the start and end of the regeneration event, determine the minimum averaging period for each NTE event that includes regeneration active operation as described in paragraph (d)(2)(i) of this section. This minimum averaging period is used to determine whether the individual NTE event is a valid NTE event. For engines equipped with emission controls that include multiple discrete regeneration events (*e.g.*, de-soot, de-NO_X, de-SO_X, etc.) and associated electronic signals, if an NTE event includes regeneration active operation on multiple regeneration signals, determine the minimum averaging period for each regeneration signal according to paragraph (d)(2)(i) of this section and use the longest period. This minimum averaging period applies if it is longer than 30 seconds. The electronic signal from the engine's ECU must indicate non-regeneration and regeneration operation. Regeneration operation may be further divided into regeneration pending and regeneration active operation. These are referred to as states 0, 1, and 2 for non-regeneration, regeneration pending, and regeneration active operation, respectively. No further subdivision of these states are allowed for use in this paragraph (d)(2). Where the electronic signal does not differentiate between regeneration pending and active operation, take the regeneration signal to mean regeneration active operation (state 2). A complete non-regeneration event is a time period that occurs during the course of the shift-day that is bracketed by regeneration operation, which is either regeneration active operation (state 2) or regeneration pending operation (state 1). A complete regeneration event is a time period that occurs during the course of the shift-day that is bracketed before and after by non-regeneration operation (state 0); a complete regeneration event includes any time in the event where regeneration is pending (state 1). The following figure provides an example of regeneration events during a shift-day:

Figure 1 of § 86.1370-2007

Regeneration Events During a Shift-day

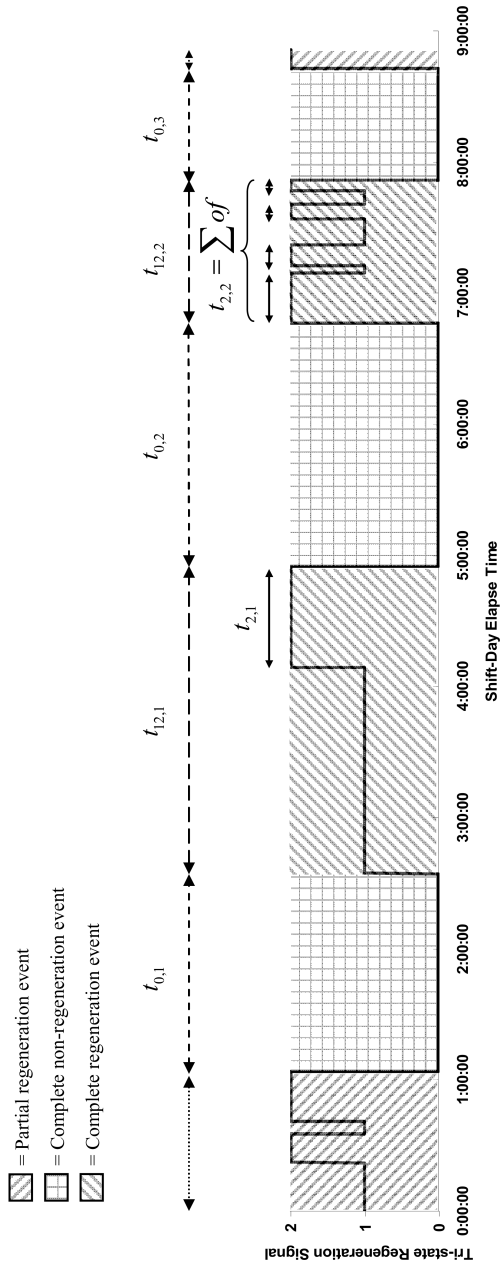

(i) Calculate the minimum averaging period, $t_{NTE,min}$, for each candidate NTE event as follows:

$$t_{\mathrm{NTE,min}} = \frac{\sum_{i=1}^{N} t_{2,\mathrm{NTE,i}}}{RF}$$

Where:

i = an indexing variable that represents periods of time within the candidate NTE event where the electronic signal indicates regeneration active operation (state 2).

N = the number of periods of time within the candidate NTE event where the electronic signal indicates regeneration active operation (state 2).

$t_{2,\mathrm{NTE,i}}$ = the duration of the i-th time period within the candidate NTE event where the electronic signal indicates regeneration active operation (state 2), in seconds.

RF = regeneration fraction over the course of the shift-day, as determined in paragraph (d)(2)(ii) of this section.

(ii) Calculate the regeneration fraction, RF, over the course of a shift-day as follows:

$$RF = \frac{\dfrac{\sum_{i=1}^{N_{12}} \sum_{j=1}^{N_{2,i}} t_{2,i,j}}{N_{12}}}{\dfrac{\sum_{k=1}^{N_0} t_{0,k}}{N_0} + \dfrac{\sum_{i=1}^{N_{12}} t_{12,i}}{N_{12}}}$$

Where:

i = an indexing variable that represents complete regeneration events within the shift-day.

j = an indexing variable that represents periods of time within the i-th complete regeneration event where the electronic signal indicates regeneration active operation (state 2).

k = an indexing variable that represents complete non-regeneration events within the shift-day.

N_0 = the number of complete non-regeneration events within the shift-day.

N_{12} = the number of complete regeneration events within the shift-day.

$N_{2,i}$ = the number of periods of within the i-th complete regeneration event where the electronic signal indicates regeneration active operation (state 2).

$t_{0,k}$ = the duration of the k-th complete non-regeneration event within the shift-day, in seconds.

$t_{12,i}$ = the duration of the i-th complete regeneration event within the shift-day, in seconds, including time in those events where regeneration is pending (state 1).

$t_{2,i,j}$ = the duration of the j-th time period within the i-th complete regeneration event where the electronic signal indicates regeneration active operation (state 2), in seconds. Note that this excludes time in each complete regeneration event where regeneration is pending (state 1).

(iii) If either N_0 or N_{12} are zero, then RF cannot be calculated and all candidate NTE events that include regeneration active operation are void.

(iv) Compare the minimum averaging period for the candidate NTE event, $t_{\mathrm{NTE,min}}$, to the actual NTE duration, t_{NTE}. If $t_{\mathrm{NTE}} < t_{\mathrm{NTE,min}}$ the candidate NTE event is void. If $t_{\mathrm{NTE}} \geq t_{\mathrm{NTE,min}}$ the candidate NTE event is valid. It can also therefore be included in the overall determination of vehicle-pass ratio according to § 86.1912.

(v) You may choose to not void emission results for a candidate NTE event even though we allow you to void the NTE event under paragraph (d)(2)(iii) or (iv) of this section. If you choose this option, you must include the results for all regulated pollutants that

were measured and validated during the NTE event for a given NTE monitoring system.

(vi)(A) The following is an example of calculating the minimum averaging period, $t_{NTE,min}$, for a candidate NTE event. See Figure 1 of this section for an illustration of the terms to calculate the regeneration fraction, *RF*. For this example there are three complete non-regeneration events and two complete regeneration events in the shift-day.

$N_0 = 3$
$N_{12} = 2$

(B) The duration of the three complete non-regeneration events within the shift-day are:

$t_{0,1} = 5424$ s
$t_{0,2} = 6676$ s
$t_{0,3} = 3079$ s

(C) The sums of all the regeneration active periods in the two complete regeneration events are:

$$\sum_{j=1}^{N_{2,1}} t_{2,1,j} = t_{2,1} = 2769 \text{ s}$$

$$\sum_{j=1}^{N_{2,2}} t_{2,2,j} = t_{2,2} = 2639 \text{ s}$$

(D) The duration of each of the two complete regeneration events within the shift-day are:

$t_{12,1} = 8440$ s
$t_{12,2} = 3920$ s

(E) The *RF* for this shift-day is:

$$RF = \frac{\dfrac{2769+2639}{2}}{\dfrac{5424+6676+3079}{3} + \dfrac{8440+3920}{2}} = 0.2406$$

(F) For this example, consider a candidate NTE event where there are two periods of regeneration active operation (state 2).

$t_{2,NTE,1} = 37$ s
$t_{2,NTE,2} = 40$ s

(G) The minimum averaging period for this candidate NTE event is:

$$t_{NTE,min} = \frac{37+40}{0.2406}$$

$t_{NTE,min} = 320.0$ s

(e) *Ambient corrections*. The measured data shall be corrected based on the ambient conditions under which it was taken, as specified in this section.

(1) For engines operating within the ambient conditions specified in § 86.007–11(a)(4)(ii)(a):

(i) NO_X emissions shall be corrected for ambient air humidity to a standard humidity level of 50 grains (7.14 g/kg) if the humidity of the intake air was

below 50 grains, or to 75 grains (10.71 g/kg) if above 75 grains.

(ii) NO_X and PM emissions shall be corrected for ambient air temperature to a temperature of 55 degrees F (12.8 degrees C) for ambient air temperatures below 55 degrees F or to 95 degrees F (35.0 degrees C) if the ambient air temperature is above 95 degrees F.

(iii) No ambient air temperature or humidity correction factors shall be used within the ranges of 50–75 grains or 55–95 degrees F.

(iv) Where test conditions require such correction factors, the manufacturer must use good engineering judgement and generally accepted engineering practice to determine the appropriate correction factors, subject to EPA review.

(2) For engines operating within the ambient conditions specified in § 86.007–11(a)(4)(ii)(b):

(i) NO_X emissions shall be corrected for ambient air humidity to a standard humidity level of 50 grains (7.14 g/kg) if the humidity of the intake air was below 50 grains, or to 75 grains (10.71 g/kg) if above 75 grains.

(ii) NO_X and PM emissions shall be corrected for ambient air temperature to a temperature of 55 degrees F (12.8 degrees C) for ambient air temperatures below 55 degrees F.

(iii) No ambient air temperature or humidity correction factors shall be used within the ranges of 50–75 grains or for temperatures greater than or equal to 55 degrees F.

(iv) Where test conditions require such correction factors, the manufacturer must use good engineering judgement and generally accepted engineering practice to determine the appropriate correction factors, subject to EPA review.

(f) *NTE cold temperature operating exclusion.* Engines equipped with exhaust gas recirculation (EGR) whose operation within the NTE control area specified in paragraph (b) of this section when operating during cold temperature conditions as specified in paragraph (f)(1) of this section are not subject to the NTE emission limits during the specified cold temperature conditions.

(1) Cold temperature operation is defined as engine operating conditions meeting either of the following two criteria:

(i) Intake manifold temperature (IMT) less than or equal to the temperature defined by the following relationship between IMT and absolute intake manifold pressure (IMP) for the corresponding IMP:

$$P = 0.0875 \times IMT - 7.75 \quad \text{Equation (1)}$$

Where:

P = absolute intake manifold pressure in bars.

IMT = intake manifold temperature in degrees Fahrenheit.

(ii) Engine coolant temperature (ECT) less than or equal to the temperature defined by the following relationship between ECT and absolute intake manifold pressure (IMP) for the corresponding IMP:

$$P = 0.0778 \times ECT - 9.8889 \quad \text{Equation (2)}$$

Where:

P = absolute intake manifold pressure in bars.

ECT = engine coolant temperature in degrees Fahrenheit.

(2) [Reserved]

(g) You may exclude emission data based on catalytic aftertreatment temperatures as follows:

(1) For an engine equipped with a catalytic NO_X aftertreatment system, exclude NO_X emission data that is collected when the exhaust temperature at any time during the NTE event is less than 250 °C.

(2) For an engine equipped with an oxidizing catalytic aftertreatment system, exclude NMHC and CO emission data that is collected if the exhaust temperature is less than 250 °C at any time during the NTE event.

(3) Using good engineering judgment, measure exhaust temperature within 30 cm downstream of the last applicable catalytic aftertreatment device. Where there are parallel paths, use good engineering judgment to measure the temperature within 30 cm downstream of the last applicable catalytic aftertreatment device in the path with the greatest exhaust flow.

(h) Any emission measurements corresponding to engine operating conditions that do not qualify as a valid NTE sampling event may be excluded

from the determination of the vehicle-pass ratio specified in § 86.1912 for the specific pollutant.

(i) Start emission sampling at the beginning of each valid NTE sampling event, except as needed to allow for zeroing or conditioning the PEMS. For gaseous emissions, PEMS preparation must be complete for all analyzers before starting emission sampling.

(j) Emergency vehicle AECDs. If your engine family includes engines with one or more approved AECDs for emergency vehicle applications under paragraph (4) of the definition of ''defeat device'' in § 86.1803, the NTE emission limits do not apply when any of these AECDs are active.apply when any of these AECDs are active.

[65 FR 59961, Oct. 6, 2000, as amended at 66 FR 5188, Jan. 18, 2001; 70 FR 40441, July 13, 2005; 75 FR 68457, Nov. 8, 2010; 77 FR 34146, June 8, 2012. Redesignated and amended at 79 FR 23705, Apr. 28, 2014; 81 FR 73982, Oct. 25, 2016]

§ 86.1372 Measuring smoke emissions within the NTE zone.

This section contains the measurement techniques to be used for determining compliance with the filter smoke limit or opacity limits in § 86.007–11(b)(1)(iv).

(a) For steady-state or transient smoke testing using full-flow opacimeters, equipment meeting the requirements of subpart I of this part or ISO/DIS–11614 ''Reciprocating internal combustion compression-ignition engines—Apparatus for measurement of the opacity and for determination of the light absorption coefficient of exhaust gas'' is required. This document is incorporated by reference (see § 86.1).

(1) All full-flow opacimeter measurements shall be reported as the equivalent percent opacity for a five inch effective optical path length using the Beer-Lambert relationship.

(2) Zero and full-scale (100 percent opacity) span shall be adjusted prior to testing.

(3) Post test zero and full scale span checks shall be performed. For valid tests, zero and span drift between the pre-test and post-test checks shall be less than two percent of full-scale.

(4) Opacimeter calibration and linearity checks shall be performed using manufacturer's recommendations or good engineering practice.

(b) For steady-state testing using a filter-type smokemeter, equipment meeting the requirements of ISO/FDIS–10054 ''Internal combustion compression-ignition engines—Measurement apparatus for smoke from engines operating under steady-state conditions—Filter-type smokemeter'' is recommended. Other equipment may be used provided it is approved in advance by the Administrator.

(1) All filter-type smokemeter results shall be reported as a filter smoke number (FSN) that is similar to the Bosch smoke number (BSN) scale.

(2) Filter-type smokemeters shall be calibrated every 90 days using manufacturer's recommended practices or good engineering practice.

(c) For steady-state testing using a partial-flow opacimeter, equipment meeting the requirements of ISO–8178–3 and ISO/DIS–11614 is recommended. Other equipment may be used provided it is approved in advance by the Administrator.

(1) All partial-flow opacimeter measurements shall be reported as the equivalent percent opacity for a five inch effective optical path length using the Beer-Lambert relationship.

(2) Zero and full scale (100 percent opacity) span shall be adjusted prior to testing.

(3) Post-test zero and full scale span checks shall be performed. For valid tests, zero and span drift between the pre-test and post-test checks shall be less than two percent of full scale.

(4) Opacimeter calibration and linearity checks shall be performed using manufacturer's recommendations or good engineering practice.

(d) Replicate smoke tests may be run to improve confidence in a single test or stabilization. If replicate tests are run, three additional tests which confirm to this section shall be run, and the final reported test results must be the average of all the valid tests.

(e) A minimum of thirty seconds sampling time shall be used for average transient smoke measurements. The opacity values used for this averaging must be collected at a minimum rate of 1 data point per second, and all data

points used in the averaging must be equally spaced in time.

[65 FR 59962, Oct. 6, 2000. Redesignated at 79 FR 23706, Apr. 28, 2014]

Subpart O [Reserved]

Subpart P—Emission Regulations for Otto-Cycle Heavy-Duty Engines, New Methanol-Fueled Natural Gas-Fueled, and Liquefied Petroleum Gas-Fueled Diesel-Cycle Heavy-Duty Engines, New Otto-Cycle Light-Duty Trucks, and New Methanol-Fueled Natural Gas-Fueled, and Liquefied Petroleum Gas-Fueled Diesel-Cycle Light-Duty Trucks; Idle Test Procedures

AUTHORITY: Secs. 202, 206, 207, 208, 301(a), Clean Air Act, as amended 42 U.S.C. 7521, 7525, 7541, 7542, and 7601.

SOURCE: 48 FR 52252, Nov. 16, 1983, unless otherwise noted.

§ 86.1501 Scope; applicability.

(a) This subpart contains gaseous emission idle test procedures for light-duty trucks and heavy-duty engines for which idle CO standards apply. It applies to 1994 and later model years. The idle test procedures are optionally applicable to 1994 through 1996 model year natural gas-fueled and liquified petroleum gas-fueled light-duty trucks and heavy-duty engines.

(b) References in this subpart to engine families and emission control systems shall be deemed to apply to durability groups and test groups as applicable for manufacturers certifying new light-duty trucks and Otto-cycle complete heavy-duty vehicles under the provisions of subpart S of this part.

[65 FR 59963, Oct. 6, 2000. Redesignated at 73 FR 37194, June 30, 2008]

§ 86.1502 Definitions.

The definitions in § 86.084–2 or § 86.1803–01, as applicable, apply to this subpart.

[64 FR 23923, May 4, 1999. Redesignated at 73 FR 37194, June 30, 2008]

§ 86.1503 Abbreviations.

The abbreviations in § 86.084–3 or in § 86.1804–01, as applicable, apply to this subpart.

[64 FR 23923, May 4, 1999. Redesignated at 73 FR 37194, June 30, 2008]

§ 86.1505 Introduction; structure of subpart.

(a) This subpart describes the equipment and the procedures required to perform idle exhaust emission tests on heavy-duty engines and light-duty trucks. Subpart A of this part sets forth the testing requirements, reporting requirements and test intervals necessary to comply with EPA certification procedures.

(b) Four topics are addressed in this subpart. Sections 86.1505 through 86.1515 set forth specifications and equipment requirements; §§ 86.1516 through 86.1526 discuss calibration methods and frequency; test procedures and data requirements are listed in §§ 86.1527 through 86.1542 and calculation formulas are found in § 86.1544.

[59 FR 48536, Sept. 21, 1994, as amended at 60 FR 34376, June 30, 1995. Redesignated at 73 FR 37194, June 30, 2008]

§ 86.1506 Equipment required and specifications; overview.

(a) This subpart contains procedures for performing idle exhaust emission tests on Otto-cycle heavy-duty engines and Otto-cycle light-duty trucks. Equipment required and specifications are as follows:

(1) *Exhaust emission tests*. All engines and vehicles subject to this subpart are tested for exhaust emissions. Necessary equipment and specifications appear in §§ 86.1509 through 86.1511.

(2) *Fuel and analytical tests*. Fuel requirements for idle exhaust emission testing are specified in § 86.1513. Analytical gases are specified in § 86.1514.

(b) Through the 2009 model year, manufacturers may elect to use the appropriate test procedures in this part 86 instead of the procedures referenced in 40 CFR part 1065 without getting advance approval by the Administrator.

[59 FR 48536, Sept. 21, 1994. Redesignated and amended at 73 FR 37194, June 30, 2008]

§ 86.1509 Exhaust gas sampling system.

(a) The exhaust gas sampling system shall transport the exhaust sample from the engine or vehicle to the analysis system in such a manner as to maintain the integrity of the sample constituents that are to be analyzed.

(b) The sample system shall supply a dry sample (i.e., water removed) to the analysis system.

(c) A CVS sampling system with bag or continuous analysis as specified in 40 CFR part 1065 is permitted as applicable. The inclusion of an additional raw carbon dioxide (CO_2) analyzer as specified in 40 CFR part 1065 is required if the CVS system is used, in order to accurately determine the CVS dilution factor. The heated sample line specified in 40 CFR part 1065 for raw emission requirements is not required for the raw (CO_2) measurement.

(d) A raw exhaust sampling system as specified in 40 CFR part 1065 is permitted.

[48 FR 52252, Nov. 16, 1983, as amended at 60 FR 34376, June 30, 1995; 70 FR 40441, July 13, 2005. Redesignated at 73 FR 37194, June 30, 2008]

§ 86.1511 Exhaust gas analysis system.

(a) Analyzers used for this subpart shall meet the following specifications:

(1) The analyzer used shall conform to the accuracy provisions of 40 CFR part 1065, subparts C, D, and F.

(2) The resolution of the readout device(s) for the range specified in paragraph (a)(1) of this section shall be equal to or less than 0.05 percent for the CO analyzer.

(3) For the range specified in paragraph (a)(1) of this section, the precision shall be less than ±3 percent of full-scale deflection. The precision is defined as two times the standard deviation of five repetitive responses to a given calibration gas.

(4) For the range specified in paragraph (a)(1) of this section, the mean response to a zero calibration gas shall not exceed ±3 percent of full-scale deflection during a 1-hour period.

(5) For the range specified in paragraph (a)(1) of this section the drift of the mean calibration response shall be less than ±3 percent of full scale during a 1-hour period. The calibration response is defined as the analyzer response to a calibration gas after the analyzer has been spanned by the electrical spanning network at the beginning of the 1-hour period.

(6) The analyzer must respond to an instantaneous step change at the entrance to the sampling system with a response equal to 90 percent of that step change within 15 seconds or less on the range specified in paragraph (a)(1) of this section. The step change shall be at least 60 percent of full-scale deflection.

(7) The interference gases listed shall individually or collectively produce an analyzer reading less than ±2 percent of full scale on the range specified in paragraph (a)(1) of this section.

Interference gas	Concentration	Applicable analyzer
CO_2	14 percent	CO
C_3H_8	1 percent	CO
H_2O	Saturated vapor at 100 °F	CO
NO_X	1,000 ppm	CO
O_2	5 percent	CO

(8) The analyzer shall be able to meet the specifications in paragraph (a) of this section under the following conditions:

(i) After a 30 minute warm-up from the prevailing ambient conditions;

(ii) Between 0 to 85 percent relative humidity; and

(iii) During variations of ±50 percent of nominal sample flow.

(b) The inclusion of a raw CO_2 analyzer as specified in 40 CFR part 1065 is required in order to accurately determine the CVS dilution factor.

[48 FR 52252, Nov. 16, 1983, as amended at 60 FR 34377, June 30, 1995; 70 FR 40441, July 13, 2005. Redesignated at 73 FR 37194, June 30, 2008]

§ 86.1513 Fuel specifications.

The requirements of this section are set forth in 40 CFR part 1065, subpart H, for heavy-duty engines and in § 86.113–94 for light-duty trucks.

[70 FR 40441, July 13, 2005. Redesignated at 73 FR 37194, June 30, 2008]

§ 86.1514 Analytical gases.

(a) The final idle emission test results shall be reported as percent for carbon monoxide on a dry basis.

(b) If the raw CO sampling system specified in 40 CFR part 1065 is used, the analytical gases specified in 40 CFR part 1065, subpart H, shall be used.

(c) If a CVS sampling system is used, the analytical gases specified in 40 CFR part 1065, subpart H, shall be used.

[48 FR 52252, Nov. 16, 1983, as amended at 51 FR 24613, July 7, 1986; 60 FR 34377, June 30, 1995; 70 FR 40441, July 13, 2005. Redesignated at 73 FR 37194, June 30, 2008]

§ 86.1516 Calibration; frequency and overview.

(a) Calibrations shall be performed as specified in §§ 86.1518–84 through 86.1526–84.

(b) At least monthly or after any maintenance which could alter calibration, check the calibration of the CO analyzer. Adjust or repair the analyzer as necessary.

(c) Water traps, filters, or conditioning columns should be checked before each test.

[48 FR 52252, Nov. 16, 1983. Redesignated at 73 FR 37194, June 30, 2008]

§ 86.1519 CVS calibration.

If the CVS system is used for sampling during the idle emission test, the calibration instructions are specified in 40 CFR part 1065, subpart D, for heavy-duty engines, and § 86.119–78 for light-duty trucks.

[70 FR 40441, July 13, 2005. Redesignated at 73 FR 37194, June 30, 2008]

§ 86.1522 Carbon monoxide analyzer calibration.

(a) *Initial check.* (1) Follow good engineering practice for instrument start-up and operation. Adjust the analyzer to optimize performance on the range specified in § 86.1511–84(a)(1).

(2) Calibrate the analyzer with the calibration gas specified in § 86.1514–84.

(3) Adjust the electrical span network such that the electrical span point is correct when the analyzer reads the calibration gas correctly.

(4) Determine that the analyzer complies with the specifications in § 86.1511–84.

(b) *Periodic check.* Follow paragraphs (a) (1), (2), and (3) of this section as specified by § 86.1516–84(b). Adjust or repair the analyzer as necessary.

[48 FR 52252, Nov. 16, 1983. Redesignated at 73 FR 37194, June 30, 2008]

§ 86.1524 Carbon dioxide analyzer calibration.

(a) The calibration requirements for the dilute-sample CO_2 analyzer are specified in 40 CFR part 1065, subpart D, for heavy-duty engines and § 86.124–78 for light-duty trucks.

(b) The calibration requirements for the raw CO_2 analyzer are specified in 40 CFR part 1065, subpart D.

[70 FR 40441, July 13, 2005. Redesignated at 73 FR 37194, June 30, 2008]

§ 86.1526 Calibration of other equipment.

Other test equipment used for testing shall be calibrated as often as necessary according to good engineering practice.

[48 FR 52252, Nov. 16, 1983. Redesignated at 73 FR 37194, June 30, 2008]

§ 86.1527 Idle test procedure; overview.

(a) The idle emission test procedure is designed to determine the raw concentration (in percent) of CO in the exhaust flow at idle. The test procedure begins with the engine at normal operating temperature. (For example, the warm-up for an engine may be the transient engine or chassis dynamometer test.)

(b) Raw emission sampling must be made before dilution occurs from a single exhaust pipe in which exhaust products are homogeneously mixed. The configuration for dual-exhaust systems must also allow for raw emission measurements, which will require that an additional ''Y'' pipe be placed in the exhaust system before dilution.

[48 FR 52252, Nov. 16, 1983. Redesignated at 73 FR 37194, June 30, 2008]

§ 86.1530 Test sequence; general requirements.

(a) The following test sequence lists the major steps encountered during the idle test:

Preparation
Warm-up (or Emission Test)

Preconditioning, 30 seconds minimum, six minutes maximum
Idle Stabilization, 30±5 seconds
Idle Emission Sampling, one minute minimum, six minutes maximum

These steps are described by subsequent procedures.

(b) Ambient test cell conditions during the test shall be those specified in § 86.130–78 or 40 CFR part 1065, subpart F.

[48 FR 52252, Nov. 16, 1983, as amended at 70 FR 40441, July 13, 2005. Redesignated at 73 FR 37194, June 30, 2008]

§ 86.1537 Idle test run.

The following steps shall be taken for each test:

(a) Check the device(s) for removing water from the exhaust sample and the sample filter(s). Remove any water from the water trap(s). Clean and replace the filter(s) as necessary.

(b) Set the zero and span points of the CO analyzer with the electrical spanning network or with analytical gases.

(c) Achieve normal engine operating condition. The transient engine or chassis dynamometer test is an acceptable technique for warm-up to normal operating condition for the idle test. If the emission test is not performed prior to the idle emission test, a heavy-duty engine may be warmed up according to 40 CFR part 1065, subpart F. A light-duty truck may be warmed up by operation through one Urban Dynamometer Driving Schedule test procedure (see § 86.115–78 and appendix I to this part).

(d) Operate the warm engine at 2500 ±50 rpm, or rated torque speed for diesel-cycle engines, and zero load for a minimum of 30 seconds and a maximum of 6 minutes.

(e) If the CVS sampling system is used, the following procedures apply:

(1) If bag samples are drawn, with the sample selector valves in the standby position connect evacuated sample collection bags to the dilute exhaust and dilution air sample collection systems.

(2) Start the CVS (if not already on), the sample pumps, integrators, and the raw CO_2 analyzer, as applicable. (The heat exchanger of the constant volume sampler, if used, shall be running at operating temperature before sampling begins.)

(3) Adjust the sample flow rates to the desired flow rate and set the gas flow measuring devices to zero.

(4) Operate the engine or vehicle at curb idle for 30±5 seconds with the clutch disengaged or in neutral gear. A heavy-duty engine may also be disconnected from the dynamometer, or the dynamometer may be shut off.

(5) Begin raw and dilute sampling.

(6) For bag sampling, sample idle emissions long enough to obtain a sufficient bag sample, but in no case shorter than 60 seconds nor longer than 6 minutes. Follow the sampling and exhaust measurements requirements of 40 CFR part 1065, subpart F, for conducting the raw CO_2 measurement.

(7) As soon as possible, transfer the idle test exhaust and dilution air samples to the analytical system and process the samples according to § 86.1540–84. Obtain a stabilized reading of the exhaust sample on all analyzers within 20 minutes of the end of the sample collection phase of the test.

(f) If the raw exhaust sampling and analysis technique specified in 40 CFR part 1065 is used, the following procedures apply:

(1) Warm up the engine or vehicle per paragraphs (c) and (d) of this section. Operate the engine or vehicle at the conditions specified in paragraph (e)(4) of this section.

(2) Follow the sampling and exhaust measurement requirements of 40 CFR part 1065, subpart F. The idle sample shall be taken for 60 seconds minimum, and no more than 64 seconds. The chart reading procedures of 40 CFR part 1065, subpart F, shall be used to determine the analyzer response.

(g) If the engine or vehicle stalls at any time during the test run, the test is void.

[48 FR 52252, Nov. 16, 1983, as amended at 60 FR 34377, June 30, 1995; 70 FR 40441, July 13, 2005. Redesignated at 73 FR 37194, June 30, 2008]

§ 86.1540 Idle exhaust sample analysis.

(a) Record the CO idle concentrations in percent.

(b) If the CVS sampling system is used, the analysis procedures for dilute CO and CO_2 specified in 40 CFR part

1065 apply. Follow the raw CO_2 analysis procedure specified in 40 CFR part 1065, subpart F, for the raw CO_2 analyzer.

(c) If the continuous raw exhaust sampling technique specified in 40 CFR part 1065 is used, the analysis procedures for CO specified in 40 CFR part 1065, subpart F, apply.

[48 FR 52252, Nov. 16, 1983, as amended at 70 FR 40441, July 13, 2005. Redesignated at 73 FR 37194, June 30, 2008]

§ 86.1542 Information required.

(a) *General data—heavy-duty engines.* Information shall be recorded for each idle emission test as specified in 40 CFR part 1065, subpart G. The following test data are required:

(1) Date and time of day.

(2) Test number.

(3) Engine intake air or test cell temperature.

(4) Barometric pressure.

NOTE: A central laboratory barometer may be used: *Provided,* That individual test cell barometric pressures are shown to be within ±0.1 percent of the barometric pressure at the central barometer location.

(5) Engine intake or test cell and CVS dilution air humidity.

(6) Curb idle speed during the test.

(7) Idle exhaust CO concentration (dry basis).

(8) Idle exhaust raw CO_2 concentration (if applicable).

(9) Dilute bag sample CO and CO_2 concentrations (if applicable).

(10) Total CVS flow rate with calculated dilution factor for the idle mode (if applicable).

(b) *General data—light-duty trucks.* The following information shall be recorded with respect to each test:

(1) Test number.

(2) System or device tested (brief description).

(3) Date and time of day for the test.

(4) Instrument operated.

(5) Vehicle: ID number, manufacturer, model year, standards, engine family, evaporative emissions family, basic engine description (including displacement, number of cylinders, turbocharger used and catalyst usage), fuel system (including number of carburetors, number of carburetor barrels, fuel injection type and fuel tank(s) capacity and location), engine code, gross vehicle weight rating, inertia weight class and transmission configuration, as applicable.

(6) All pertinent instrument information such as tuning, gain, serial number, detector number and range. As an alternative a reference to a vehicle test cell number may be used, with the advance approval of the Administrator, provided test cell calibration records show the pertinent instrument information.

(7) Recorder charts or computer printouts: Identify zero, span, exhaust gas and dilution air sample traces or computer readings (if applicable).

(8) Test cell ambient temperature and, if applicable, barometric pressure and humidity.

NOTE: A central laboratory barometer may be used: *Provided,* That individual test cell barometric pressures are shown to be within + 0.1 percent of the barometric pressure at the central barometer location.

(9) Pressure of the mixture of exhaust and dilution air entering the CVS metering device (or pressure drop across the CFV), the pressure increase across the device, and the temperature at the inlet (if applicable). The temperature may be recorded continuously or digitally to determine temperature variations (if applicable).

(10) The number of revolutions of the positive displacement pump accumulated while exhaust samples are being collected (if applicable). The number of standard cubic feet metered by a critical flow venturi would be the equivalent record for a CFV (if applicable).

(11) The humidity of the dilution air.

NOTE: If conditioning columns are not used (see §§ 86.122 and 86.144) this measurement can be deleted. If the conditioning columns are used and the dilution air is taken from the test cell, the ambient humidity can be used for this measurement.

(12) Curb idle engine speed during the test.

(13) Idle exhaust CO concentration (dry basis).

(14) Idle exhaust raw CO_2 concentration (if applicable).

(15) Dilute bag sample CO and CO_2 concentrations (if applicable).

(16) Total CVS flow rate with calculated dilution factor for the idle mode (if applicable).

[48 FR 52252, Nov. 16, 1983, as amended at 49 FR 48149, Dec. 10, 1984; 70 FR 40441, July 13, 2005. Redesignated at 73 FR 37194, June 30, 2008]

§ 86.1544 Calculation; idle exhaust emissions.

(a) The final idle emission test results shall be reported as percent for carbon monoxide on a dry basis.

(b) If a CVS sampling system is used, the following procedure shall apply:

(1) Use the procedures, as applicable, in 40 CFR 1065.650 to determine the dilute wet-basis CO and CO_2 in percent.

(2) Use the procedure, as applicable, in 40 CFR 1065.650 to determine the raw dry-basis CO_2 in percent.

(3) Convert the raw dry-basis CO_2 to raw wet-basis. An assumption that the percent of water by volume in the raw sample is equal to the percent of raw dry-basis CO_2 minus 0.5 percent is acceptable. For example:

10.0% dry $CO_2 - 0.5\%$ = 9.5% water

$(1.00 - 0.095)$ (10.0% dry CO_2) = 9.05% wet CO_2

(4) Calculate the CVS dilution factor (DF) by:

$$DF = \frac{\text{Raw wet } CO_2 - \text{background } CO_2}{\text{Dilute wet } CO_2 - \text{background } CO_2}$$

(5) Convert the dilute wet-basis CO to dilute dry-basis values. An assumption that the percent of water by volume in the sample bag is 2 percent is acceptable. For example:

Dilute dry CO = (dilute wet CO)/(1.00–0.02)

(6) Calculate the raw dry-basis CO values by:

Raw dry CO = (DF) (dilute dry CO)

(c) If the raw exhaust sampling and analysis system specified in 40 CFR part 1065 is used, the percent for carbon monoxide on a dry basis shall be calculated using the procedure, as applicable, in 40 CFR 1065.650.

(Secs. 202, 203, 206, 207, 208, 301a, Clean Air Act, as amended; 42 U.S.C. 7521, 7522, 7525, 7541, 7542, 7601a)

[48 FR 52252, Nov. 16, 1983, as amended at 49 FR 48149, Dec. 10, 1984; 50 FR 10708, Mar. 15, 1985; 51 FR 24613, July 7, 1986; 70 FR 40441, July 13, 2005. Redesignated at 73 FR 37194, June 30, 2008]

Subpart Q—Regulations for Altitude Performance Adjustments for New and In-Use Motor Vehicles and Engines

AUTHORITY: Secs. 215 and 301, Clean Air Act, as amended (42 U.S.C. 7550 and 7601).

SOURCE: 45 FR 66956, Oct. 8, 1980, unless otherwise noted.

§ 86.1601 General applicability.

This subpart applies to manufacturers of motor vehicles and motor vehicle engines (hereafter referred to as vehicles) which are subject to the requirements of title II of the Clean Air Act. This subpart applies to the following vehicles:

(a) 1968 and later model year light-duty vehicles and light-duty trucks.

(b) 1970 and later model year heavy-duty engines built after December 31, 1969.

(c) 1978 and later model year motorcycles built after December 31, 1977.

(d) References in this subpart to engine families and emission control systems shall be deemed to apply to durability groups and test groups as applicable for manufacturers certifying new light-duty vehicles, light-duty trucks, and Otto-cycle complete heavy-duty vehicles under the provisions of subpart S of this part.

[45 FR 66956, Oct. 8, 1980, as amended at 64 FR 23923, May 4, 1999; 65 FR 59963, Oct. 6, 2000]

§ 86.1602 Definitions.

The definitions provided in subpart A also apply in this subpart. Additional definitions that apply in this subpart are as follow:

Altitude performance adjustments are adjustments or modifications made to vehicle, engine, or emission control functions in order to improve emission control performance at altitudes other

than those for which the vehicles were designed.

Low altitude means any elevation less than or equal to 1,219 meters (4,000 feet).

Manufacturer parts are parts produced or sold by the manufacturer of the motor vehicle or motor vehicle engine.

§ 86.1603 General requirements.

(a) Manufacturers of vehicles specified in § 86.1601 shall submit to the Administrator for approval the following altitude performance adjustment instructions.

(1) Low-altitude adjustment instructions for vehicles certified to meet the appropriate high-altitude emission standards.

(2) High-altitude adjustment instructions for vehicles certified to meet the appropriate low-altitude emission standards.

(b) Manufacturers are not required to submit altitude adjustment instructions for vehicles equipped with systems or devices that compensate (in full or in part) the engine fuel metering system for air density changes. Manufacturers claiming this exemption must submit to the Administrator for approval a notification of the claim specifying the affected vehicles. The notification must also describe the compensating system used.

(c) Manufacturers may request the Administrator to waive the application of this regulation for vehicles which potentially may never be operated at an altitude other than that for which they were designed (such as vehicles which are not offered for sale within the continental United States).

(d) Manufacturers shall meet the requirements of paragraph (a), according to the following schedule:

(1) Altitude adjustment instructions for all 1980 and earlier model year vehicles or engines shall be submitted to the Administrator within one (1) year of the effective date of this regulation.

(2) Altitude adjustment instructions for 1982 and later model year vehicles or engines shall be submitted to the Administrator within 30 days of the issuance of the certificate of conformity for those vehicles or engines. For vehicles or engines certified for the 1981 model year before the publication of this regulation, altitude adjustment instructions shall be submitted within 90 days of the publication of this regulation.

(e) Failure to submit altitude performance adjustment instructions in accordance with this section is a violation of section 203(a)(3) of the Clean Air Act and may result in penalties as specified in section 205 of the Clean Air Act. The Administrator may grant extensions of the schedule in paragraph (c) if the manufacturer submits a written request to the Administrator specifying the reasons for the need for the extension. Requests for an extension must be received by EPA at least 5 working days prior to the submittal date contained in paragraph (d).

(f) The adjustment instructions (including labels) that the Administrator approves under this subpart shall be made available by the manufacturer at no cost to service outlets and the general public. EPA encourages manufacturers to notify vehicle owners in high-altitude areas of the availability of high-altitude adjustments.

(g) If altitude adjustments are performed according to the instructions approved by the Administrator, they will not be treated as violations of the tampering provisions of section 203(a) of the Act except as described below:

§ 86.1604 Conditions for disapproval.

(a) The Administrator shall not approve altitude performance adjustments that will:

(1) Cause any regulated pollutant emission level to increase if the emission level exceeded the appropriate emission standard before adjustment was made.

(2) Cause any regulated pollutant emission level to exceed the appropriate emission standard if the emission level did not exceed the emission standard before the adjustment was made.

(3) For light-duty vehicles, light-duty trucks, motorcycles, heavy-duty gasoline-fueled engines, cause any reduction of vehicle performance (as evaluated by the manufacturer) such that vehicle drivers will likely complain.

(4) Be of such technical complexity or require such complex, expensive, or exclusive equipment that a competent

mechanic in an average service establishment cannot perform the adjustments correctly. Adjustment procedures should not require knowledge or training beyond that required to perform normal engine maintenance. All required equipment must be available to any service establishment at competitive cost.

(5) Require the use of manufacturer parts, unless they are necessary to ensure emission control performance and unless the Administrator grants a waiver under section 207(c)(3)(B) of the Act.

(6) Removes or defeats the parameter adjustment controls for the parameters listed in §§ 86.081–22(e)(1)(i) and 86.082–22(e)(1)(i) for light-duty vehicles and light-duty trucks, and § 86.428–80(d) for motorcycles unless:

(i) The manufacturer determines that it is reasonable to restore the parameter adjustment control in use and provides appropriate instruction as part of the high-altitude performance adjustment instructions, or

(ii) The manufacturer determines that is is not reasonable to restore the parameter adjustment control in use and alternatively includes on the label required in § 86.1606 a statement to the effect that the labeled vehicle can be adjusted but that adjustment to other than manufacturer specification may be considered violation of Federal law.

(b) If the Administrator determines that the altitude performance adjustment instructions cannot be approved, the Administrator shall notify the manufacturer in writing of the disapproval. This notification shall explain the reasons for the disapproval.

(1) Within 20 working days of the date of a notification of disapproval, the manufacturer may file a written appeal to the Administrator. The Administrator may allow additional oral or written testimony prior to rendering a final decision.

(2) If the manufacturer files no appeal with the Administrator, the disapproval becomes final.

(3) Within 30 days following the Administrator's final decision of disapproval, the manufacturer must submit new altitude performance adjustment instructions applying to all of the vehicles for which the disapproved instructions applied. If these new instructions are not submitted within 30 days, EPA may take action under sections 203(a)(3) and 205 of the Act. If the new altitude performance adjustment instructions are disapproved by the Administrator, the manufacturer may follow the appeal procedures under paragraphs (b)(1) and (b)(2) of this section.

(c) If the Administrator makes a final decision to disapprove the new instructions, EPA may take action under sections 203(a)(3) and 205 of the Act.

§ 86.1605 Information to be submitted.

(a) Manufacturers shall submit to the Administrator the text of the altitude performance adjustment instructions to be provided to vehicle owners and service establishments. Each set of altitude performance adjustment instructions must set forth the adjustment procedure (including the installation of the label required by § 86.1606) to be followed and identify the vehicles for which the instructions are applicable. At a minimum, each set of instructions shall identify the vehicle applicability by manufacturer, car line, model year, engine displacement, engine family, and exhaust emission control systems. Manufacturers may specify vehicle applicability in greater detail if necessary, but such specifications must be identifiable to the public and the service industry through vehicle marking or codes.

(b) The manufacturer shall submit to the Administrator the following information about the adjustments:

(1) Specifications of changes in calibrations of any component, including the original and new calibration values or curves;

(2) Descriptions of component additions, including a full description of the new components along with the configurations (sketch or drawing), calibration values, and part numbers;

(3) Descriptions of component replacements, including all items in paragraph (b)(2) of this section, for the new parts. Also, a description of the differences between the original component and the new component with respect to design, calibration, and function;

(4) Descriptions of any special tools necessary to perform the adjustments.

(c) The manufacturer shall submit to the Administrator the following evaluations of the adjustments:

(1) A statement that the conditions of § 86.1604 (a) (1) and (2) are not caused by the adjustment, and supporting information for this statement consisting of technical evaluations (consistent with good engineering practice) or emission test data.

(2) A statement that vehicle performance is generally unchanged or improved as result of the adjustments, and supporting information for this statement consisting of technical evaluations or driver evaluations.

(3) Information that shows compliance with section 202(a)(4)(A) of the Act (which prohibits vehicles from causing unreasonable risks to public health, welfare, and safety).

(d) The manufacturer shall submit to the Administrator for approval a copy or sample of the label required by § 86.1606 and a copy of the instructions for installation of the label.

§ 86.1606 Labeling.

(a) The manufacturer shall make available to the public as part of the altitude performance adjustment instructions the labels described in this section. Instructions for installing the labels according to the requirements of this section shall be provided with each label.

(b) The label installation instructions shall indicate the following information.

(1) For light-duty vehicles, light-duty trucks, and heavy-duty engines, the label should be affixed in a readily visible position in the engine compartment and beside (to the extent possible) the existing label which is required under § 86.079–35.

(2) For motorcycles, the label should be affixed in a readily accessible position and beside (to the extent possible) the existing label which is required under § 86.413–78(a)(1).

(3) The instructions shall also indicate that the label should not be affixed to any equipment that can be easily detached from the vehicle.

(c) The label must be constructed such that if installed properly, it cannot be removed without destroying or defacing the label.

(d) The label shall contain the following information lettered in the English language in block letters and numerals, which must be of a color that contrasts with the background of the label:

(1) The label heading: Vehicle Emission Control Information Update;

(2) Full corporate name and trademark of the vehicle manufactuer;

(3) The statement: ''This vehicle has been (adjusted) (modified) to improve emission control performance when operated at (high) (low) altitude'';

(4) Information on where altitude performance adjustment instructions may be obtained or include the actual altitude performance adjustment instructions;

(5) The new tuneup specifications (if changed from the original label specifications) at the applicable altitude.

Subpart R [Reserved]

Subpart S—General Compliance Provisions for Control of Air Pollution From New and In-Use Light-Duty Vehicles, Light-Duty Trucks, and Heavy-Duty Vehicles

SOURCE: 64 FR 23925, May 4, 1999, unless otherwise noted.

§ 86.1801–01 Applicability.

(a) *Applicability*. Except as otherwise indicated, the provisions of this subpart apply to new 2001 and later model year Otto-cycle and diesel cycle light-duty vehicles, light-duty trucks, medium-duty passenger vehicles, and 2005 and later model year Otto-cycle complete heavy-duty vehicles (2003 or 2004 model year for manufacturers choosing Otto-cycle HDE option 1 or 2, respectively, in § 86.005–1(c)) including multi-fueled, alternative fueled, hybrid electric, and zero emission vehicles. These provisions also apply to 2001 model year and later new incomplete light-duty trucks below 8,500 Gross Vehicle Weight Rating, and to 2001 and later model year Otto-cycle complete heavy-duty vehicles participating in the provisions of the averaging, trading, and banking program under the provisions

of § 86.1817–05(n). In cases where a provision applies only to a certain vehicle group based on its model year, vehicle class, motor fuel, engine type, or other distinguishing characteristics, the limited applicability is cited in the appropriate section of this subpart.

(b) *Clean alternative fuel conversions.* The provisions of the subpart apply to clean alternative fuel conversions as defined in 40 CFR 85.502, of all model year light-duty vehicles, light-duty trucks, medium duty passenger vehicles, and complete Otto-cycle heavy-duty vehicles.

(c) *Optional applicability.* (1) A manufacturer may request to certify any Otto-cycle heavy-duty vehicle of 14,000 pounds Gross Vehicle Weight Rating or less in accordance with the light-duty truck provisions through the 2004 model year (2002 model year for manufacturers choosing Otto-cycle HDE option 1 in § 86.005–1(c) or 2003 model year for manufacturers choosing Otto-cycle HDE option 2 in § 86.005–1(c)). Heavy-duty engine or heavy-duty vehicle provisions of subpart A of this part do not apply to such a vehicle. A 2004 model year heavy-duty vehicle optionally certified as a light-duty truck under this provision must comply with all provisions applicable to MDPVs including exhaust and evaporative emission standards, test procedures, on-board diagnostics, refueling standards, phase-in requirements and fleet average standards under 40 CFR part 85 and this part.

(2) Beginning with the 2001 model year, a manufacturer may request to certify any incomplete Otto-cycle heavy-duty vehicle of 14,000 pounds Gross Vehicle Weight Rating or less in accordance with the provisions for complete heavy-duty vehicles. Heavy-duty engine or heavy-duty vehicle provisions of subpart A of this part do not apply to such a vehicle.

(3) A manufacturer may optionally use the provisions of this subpart in lieu of the provisions of subpart A beginning with the 2000 model year for light-duty vehicles and light-duty trucks. Manufacturers choosing this option must comply with all provisions of this subpart. Manufacturers may elect this provision for either all or a portion of their product line.

(4) Upon preapproval by the Administrator, a manufacturer may optionally certify a clean alternative fuel conversion of a complete heavy-duty vehicle greater than 10,000 pounds Gross Vehicle Weight Rating and of 14,000 pounds Gross Vehicle Weight Rating or less under the heavy-duty engine or heavy-duty vehicle provisions of subpart A of this part. Such preapproval will be granted only upon demonstration that chassis-based certification would be infeasible or unreasonable for the manufacturer to perform.

(5) A manufacturer may optionally certify a clean alternative fuel conversion of a complete heavy-duty vehicle greater than 10,000 pounds Gross Vehicle Weight Rating and of 14,000 pounds Gross Vehicle Weight Rating or less under the heavy-duty engine or heavy-duty vehicle provisions of subpart A of this part without advance approval from the Administrator if the vehicle was originally certified to the heavy-duty engine or heavy-duty vehicle provisions of subpart A of this part.

(d) *Small volume manufacturers.* Special certification procedures are available for any manufacturer whose projected or actual combined sales in all states and territories of the United States of light-duty vehicles, light-duty trucks, heavy-duty vehicles, and heavy-duty engines in its product line (including all vehicles and engines imported under the provisions of 40 CFR 85.1505 and 85.1509) are fewer than 15,000 units for the model year in which the manufacturer seeks certification. The small volume manufacturer's light-duty vehicle and light-duty truck certification procedures and described in § 86.1838–01.

(e) *National Low Emission Vehicle Program for light-duty vehicles and light light-duty trucks.* A manufacturer may elect to certify 2001–2003 model year light-duty vehicles and light light-duty trucks (LDV/LLDTs) to the provisions of the National Low Emission Vehicle Program contained in subpart R of this part. Subpart R of this part is applicable only to those covered manufacturers as defined under the provisions of subpart R of this part. All provisions of this subpart S are applicable to vehicles certified pursuant to subpart R of

this part, except as specifically noted in subpart R of this part.

(f) *''Early'' Tier 2 LDVs, LDTs and MDPVs.* Any LDV/LLDT which is certified to Tier 2 FTP exhaust standards prior to the 2004 model year, or any HLDT or MDPV which is certified to the Tier 2 FTP exhaust standards prior to the 2008 model year, to utilize alternate phase-in schedules and/or for purposes of generating and banking Tier 2 NO_X credits, must comply with all the exhaust emission requirements applicable to Tier 2 LDV/LLDTs or HLDT/MDPVs, as applicable, under this subpart.

(g) *Interim non-Tier 2 LDVs, LDTs and MDPVs.* Model year 2004–2008 LDVs, LDTs and MDPVs, that do not comply with the Tier 2 FTP exhaust emission requirements (interim non-Tier 2 LDV/LLDTs and interim non-Tier 2 HLDT/MDPVs) as permitted under the phase-in requirements of § 86.1811–04(k) must comply with all applicable interim non-Tier 2 exhaust emission requirements contained in this subpart, including FTP exhaust emission requirements for all interim non-Tier 2 LDV/LLDTs and HLDT/MDPVs found at § 86.1811–04(l). Additional emission bins and separate fleet average NO_X emission standards and other provisions are provided for interim non-Tier 2 LDV/LLDTs, and interim non-Tier 2 HLDT/MDPVs.

(h) *Applicability of provisions of this subpart to LDVs, LDTs, MDPVs and HDVs.* Numerous sections in this subpart provide requirements or procedures applicable to a ''vehicle'' or ''vehicles.'' Unless otherwise specified or otherwise determined by the Administrator, the term ''vehicle'' or ''vehicles'' in those provisions apply equally to LDVs, LDTs, MDPVs and HDVs.

[64 FR 23925, May 4, 1999, as amended at 65 FR 6851, Feb. 10, 2000; 65 FR 59963, Oct. 6, 2000; 67 FR 72825, Dec. 6, 2002; 76 FR 19873, Apr. 8, 2011]

§ 86.1801–12 Applicability.

(a) *Applicability.* The provisions of this subpart apply to certain types of new vehicles as described in this paragraph (a). Where the provisions apply for a type of vehicle, they apply for vehicles powered by any fuel, unless otherwise specified. In some cases, manufacturers of heavy-duty engines and vehicles can choose whether to meet the requirements of this subpart or the requirements of subpart A of this part; those provisions are therefore considered optional, but only to the extent that manufacturers comply with the other set of requirements. In cases where a provision applies only to a certain vehicle group based on its model year, vehicle class, motor fuel, engine type, or other distinguishing characteristics, the limited applicability is cited in the appropriate section. References in this subpart to 40 CFR part 86 generally apply to Tier 2 and older vehicles, while references to 40 CFR part 1066 generally apply to Tier 3 and newer vehicles; see 40 CFR 86.101 for detailed provisions related to this transition. The provisions of this subpart apply to certain vehicles as follows:

(1) The provisions of this subpart apply for light-duty vehicles and light-duty trucks.

(2) The provisions of this subpart apply for medium-duty passenger vehicles. The provisions of this subpart also apply for other complete heavy-duty vehicles at or below 14,000 pounds GVWR, except as follows:

(i) The provisions of this subpart are optional for diesel-cycle vehicles through model year 2017; however, if you are using the provisions of § 86.1811–17(b)(9) or § 86.1816–18(b)(8) to transition to the Tier 3 exhaust emission standards, the provisions of this subpart are optional for those diesel-cycle vehicles until the start of the Tier 3 phase-in for those vehicles.

(ii) [Reserved]

(iii) The provisions of this subpart are optional for diesel-fueled Class 3 heavy-duty vehicles in a given model year if those vehicles are equipped with engines certified to the appropriate standards in § 86.007–11 for which less than half of the engine family's sales for the model year in the United States are for complete Class 3 heavy-duty vehicles. This includes engines sold to all vehicle manufacturers. If you are the original manufacturer of the engine and the vehicle, base this showing on your sales information. If you manufacture the vehicle but are not the original manufacturer of the engine, you must use your best estimate of the

original manufacturer's sales information.

(3) The provisions of this subpart generally do not apply to incomplete heavy-duty vehicles or to complete vehicles above 14,000 pounds GVWR (see subpart A of this part and 40 CFR parts 1036 and 1037). However, this subpart applies to such vehicles in the following cases:

(i) Heavy duty vehicles above 14,000 pounds GVWR may be optionally certified to the exhaust emission standards in this subpart, including the greenhouse gas emission standards, if they are properly included in test group with similar vehicles at or below 14,000 pounds GVWR. Emission standards apply to these vehicles as if they were Class 3 heavy-duty vehicles. The work factor for these vehicles may not be greater than the largest work factor that applies for vehicles in the test group that are at or below 14,000 pounds GVWR (see § 86.1819–14).

(ii) Incomplete heavy-duty vehicles at or below 14,000 pounds GVWR may be optionally certified to the exhaust emission standards in this subpart that apply for heavy-duty vehicles.

(iii) The evaporative emission standards apply for incomplete heavy-duty vehicles at or below 14,000 pounds GVWR. Evaporative emission standards also apply for complete and incomplete heavy-duty vehicles above 14,000 pounds GVWR as specified in 40 CFR 1037.103.

(iv) Refueling emission standards apply for complete heavy-duty vehicles above 14,000 pounds GVWR as specified in 40 CFR 1037.103. All sizes of incomplete heavy-duty vehicles may be optionally certified to the refueling emission standards in this subpart.

(v) The onboard diagnostic requirements in this subpart apply for incomplete vehicles at or below 14,000 pounds GVWR, but not for any vehicles above 14,000 pounds GVWR.

(4) If you optionally certify vehicles to standards under this subpart, those vehicles are subject to all the regulatory requirements as if the standards were mandatory.

(b) *Relationship to subpart A of this part.* Unless specified otherwise, if heavy-duty vehicles are not subject to provisions of this subpart or if manufacturers choose not to meet optional provisions of this subpart as described in paragraph (a) of this section, the engines installed in those vehicles must meet the corresponding requirements under subpart A of this part. If a vehicle and its installed engine comply with a mix of provisions from this subpart and from subpart A of this part, the vehicle must be certified under this subpart, and the engine does not need to be certified separately.

(c) *Clean alternative fuel conversions.* The provisions of this subpart also apply to clean alternative fuel conversions as defined in 40 CFR 85.502 of all vehicles described in paragraph (a) of this section.

(d) *Small-volume manufacturers.* Special certification procedures are available for small-volume manufacturers as described in § 86.1838.

(e) *You.* The term ''you'' in this subpart refers to manufacturers subject to the emission standards and other requirements of this subpart.

(f) *Vehicle.* The term ''vehicle'', when used generically, does not exclude any type of vehicle for which the regulations apply (such as light-duty trucks).

(g) *Complete and incomplete vehicles.* Several provisions in this subpart, including the applicability provisions described in this section, are different for complete and incomplete vehicles. We differentiate these vehicle types as described in § 86.085–20.

(h) *Applicability of provisions of this subpart to light-duty vehicles, light-duty trucks, medium-duty passenger vehicles, and heavy-duty vehicles.* Numerous sections in this subpart provide requirements or procedures applicable to a ''vehicle'' or ''vehicles.'' Unless otherwise specified or otherwise determined by the Administrator, the term ''vehicle'' or ''vehicles'' in those provisions apply equally to light-duty vehicles (LDVs), light-duty trucks (LDTs), medium-duty passenger vehicles (MDPVs), and heavy-duty vehicles (HDVs), as those terms are defined in § 86.1803–01.

(i) *Applicability of provisions of this subpart to exhaust greenhouse gas emissions.* Numerous sections in this subpart refer to requirements relating to ''exhaust emissions.'' Unless otherwise specified or otherwise determined by the Administrator, the term ''exhaust

emissions'' refers at a minimum to emissions of all pollutants described by emission standards in this subpart, including carbon dioxide (CO_2), nitrous oxide (N_2O), and methane (CH_4).

(j) *Exemption from greenhouse gas emission standards for small businesses.* (1) Manufacturers that qualify as a small business under the Small Business Administration regulations in 13 CFR part 121 are exempt from the greenhouse gas emission standards specified in §86.1818–12 and in associated provisions in this part and in part 600 of this chapter. This exemption applies to both U.S.-based and non-U.S.-based businesses. The following categories of businesses (with their associated NAICS codes) may be eligible for exemption based on the Small Business Administration size standards in 13 CFR 121.201.

(i) Vehicle manufacturers (NAICS code 336111).

(ii) Independent commercial importers (NAICS codes 811111, 811112, 811198, 423110, 424990, and 441120).

(iii) Alternate fuel vehicle converters (NAICS codes 335312, 336312, 336322, 336399, 454312, 485310, and 811198).

(2)(i) Effective for the 2013 and later model years, a manufacturer that would otherwise be exempt under the provisions of paragraph (j)(1) of this section may optionally comply with the greenhouse gas emission standards specified in §86.1818. A manufacturer making this choice is required to comply with all the applicable standards and provisions in §86.1818 and with all associated and applicable provisions in this part and in part 600 of this chapter.

(ii) Such a manufacturer may optionally earn credits in the 2012 model year by demonstrating fleet average CO_2 emission levels below the fleet average CO_2 standard that would have been applicable in model year 2012 if the manufacturer had not been exempt. Once the small business manufacturer opting into the greenhouse gas emission standards completes certification for the 2013 model year, that manufacturer will be eligible to generate greenhouse gas emission credits for their 2012 model year production, after the conclusion of the 2012 model year for that manufacturer. Manufacturers electing to earn these 2012 credits must comply with the model year reporting requirements in §600.512–12 for that model year. The 2012 fleet average must be calculated according to §600.510 and other applicable requirements in part 600 of this chapter, and 2012 credits must be calculated according to §86.1865 and other applicable requirements in this part.

(k) *Conditional exemption from greenhouse gas emission standards.* Manufacturers meeting the eligibility requirements described in paragraphs (k)(1) and (2) of this section may request a conditional exemption from compliance with the emission standards described in §86.1818–12(c) through (e) and associated provisions in this part and in part 600 of this chapter. A conditional exemption under this paragraph (k) may be requested for the 2012 through 2016 model years. The terms ''sales'' and ''sold'' as used in this paragraph (k) shall mean vehicles produced for U.S. sale, where ''U.S.'' means the states and territories of the United States. For the purpose of determining eligibility the sales of related companies shall be aggregated according to the provisions of §86.1838–01(b)(3) or, if a manufacturer has been granted operational independence status under §86.1838(d), eligibility shall be based on vehicle production of that manufacturer.

(1) *Eligibility requirements.* Eligibility as determined in this paragraph (k) shall be based on the total sales of combined passenger automobiles and light trucks. Manufacturers must meet one of the requirements in paragraph (k)(1)(i) or (ii) of this section to initially qualify for this exemption.

(i) A manufacturer with 2008 or 2009 model year sales of more than zero and fewer than 5,000 is eligible for a conditional exemption from the greenhouse gas emission standards described in §86.1818–12 paragraphs (c) through (e).

(ii) A manufacturer with 2008 or 2009 model year sales of more than zero and fewer than 5,000 while under the control of another manufacturer, where those 2008 or 2009 model year vehicles bore the brand of the producing manufacturer but were sold by or otherwise

under the control of another manufacturer, and where the manufacturer producing the vehicles became independent no later than December 31, 2010, is eligible for a conditional exemption from the greenhouse gas emission standards described in § 86.1818–12 paragraphs (c) through (e).

(2) *Maintaining eligibility for exemption from greenhouse gas emission standards.* To remain eligible for exemption under this paragraph (k) the manufacturer's average sales for the three most recent consecutive model years must remain below 5,000. If a manufacturer's average sales for the three most recent consecutive model years exceeds 4999, the manufacturer will no longer be eligible for exemption and must meet applicable emission standards according to the provisions in this paragraph (k)(2).

(i) If a manufacturer's average sales for three consecutive model years exceeds 4999, and if the increase in sales is the result of corporate acquisitions, mergers, or purchase by another manufacturer, the manufacturer shall comply with the emission standards described in § 86.1818–12 paragraphs (c) through (e), as applicable, beginning with the first model year after the last year of the three consecutive model years.

(ii) If a manufacturer's average sales for three consecutive model years exceeds 4999 and is less than 50,000, and if the increase in sales is solely the result of the manufacturer's expansion in vehicle production, the manufacturer shall comply with the emission standards described in § 86.1818–12 paragraphs (c) through (e), as applicable, beginning with the second model year after the last year of the three consecutive model years.

(iii) If a manufacturer's average sales for three consecutive model years exceeds 49,999, the manufacturer shall comply with the emission standards described in § 86.1818–12 paragraphs (c) through (e), as applicable, beginning with the first model year after the last year of the three consecutive model years.

(3) *Requesting the conditional exemption from standards.* To be exempted from the standards described in § 86.1818–12(c) through (e), the manufacturer must submit a declaration to EPA containing a detailed written description of how the manufacturer qualifies under the provisions of this paragraph (k). The declaration must describe eligibility information that includes the following: model year 2008 and 2009 sales, sales volumes for each of the most recent three model years, detailed information regarding ownership relationships with other manufacturers, details regarding the application of the provisions of § 86.1838–01(b)(3) regarding the aggregation of sales of related companies, and documentation of good-faith efforts made by the manufacturer to purchase credits from other manufacturers. This declaration must be signed by a chief officer of the company, and must be made prior to each model year for which the exemption is requested. The declaration must be submitted to EPA at least 30 days prior to the introduction into commerce of any vehicles for each model year for which the exemption is requested, but not later than December of the calendar year prior to the model year for which exemption is requested. A conditional exemption will be granted when EPA approves the exemption declaration. The declaration must be sent to the Environmental Protection Agency at the following address: Director, Compliance and Innovative Strategies Division, U.S. Environmental Protection Agency, 2000 Traverwood Drive, Ann Arbor, Michigan 48105.

[75 FR 25682, May 7, 2010, as amended at 76 FR 19873, Apr. 8, 2011; 77 FR 63155, Oct. 15, 2012; 79 FR 23706, Apr. 28, 2014; 80 FR 9104, Feb. 19, 2015; 81 FR 73982, Oct. 25, 2016]

§ 86.1802–01 Section numbering; construction.

(a) *Section numbering.* The model year of initial applicability is indicated by the section number. The two digits following the hyphen designate the first model year for which a section is applicable. The section continues to apply to subsequent model years unless a later model year section is adopted. Example: Section 86.18xx–10 applies to model year 2010 and later vehicles. If a § 86.18xx–17 is promulgated, it would apply beginning with the 2017 model year; § 86.18xx–10 would apply only to model years 2010 through 2016, except as specified in § 86.18xx–17.

(b) A section reference without a model year suffix refers to the section applicable for the appropriate model year.

(c) If a regulation in this subpart references a section that has been superseded or no longer exists, this should be understood as a reference to the same section for the appropriate model year. For example, if a regulation in this subpart refers to § 86.1845–01, it should be taken as a reference to § 86.1845–04 or any later version of § 86.1845 that applies for the appropriate model year. However, this does not apply if the reference to a superseded section specifically states that the older provision applies instead of any updated provisions from the section in effect for the current model year; this occurs most often as part of the transition to new emission standards.

[81 FR 73982, Oct. 25, 2016]

§ 86.1803–01 Definitions.

The following definitions apply to this subpart:

505 Cycle means the test cycle that consists of the first 505 seconds (seconds 1 to 505) of the EPA Urban Dynamometer Driving Schedule, described in § 86.115–00 and listed in appendix I, paragraph (a), of this part.

866 Cycle means the test cycle that consists of the last 866 seconds (seconds 506 to 1372) of the EPA Urban Dynamometer Driving Schedule, described in § 86.115–00 and listed in appendix I, paragraph (a), of this part.

Abnormally treated vehicle means any diesel light-duty vehicle or diesel light-duty truck that is operated for less than five miles in a 30 day period immediately prior to conducting a particulate emissions test.

AC1 means a test procedure as described in § 86.162–00 which simulates testing with air conditioning operating in an environmental test cell by adding the air conditioning compressor load to the normal dynamometer forces.

AC2 means a test procedure as described in § 86.162–00 which simulates testing with air conditioning operating in an environmental test cell by adding a heat load to the passenger compartment.

Accuracy means the difference between a measurement and true value.

Act means Part A of Title II of the Clean Air Act as amended, 42 U.S.C., 7401, *et seq*.

Adjusted Loaded Vehicle Weight means the numerical average of vehicle curb weight and gross vehicle weight rating (GVWR).

Administrator means the Administrator of the Environmental Protection Agency or his/her authorized representative.

Air Conditioning Idle Test means the test procedure specified in § 86.165–12.

Air conditioning system means a unique combination of air conditioning and climate control components, including: compressor type (*e.g.*, belt, gear, or electric-driven, or a combination of compressor drive mechanisms); compressor refrigerant capacity; the number and type of rigid pipe and flexible hose connections; the number of high side service ports; the number of low side service ports; the number of switches, transducers, and expansion valves; the number of TXV refrigerant control devices; the number and type of heat exchangers, mufflers, receiver/dryers, and accumulators; and the length and type of flexible hose (*e.g.*, rubber, standard barrier or veneer, ultra-low permeation).

Alternative fuels means any fuel other than gasoline and diesel fuels, such as methanol, ethanol, and gaseous fuels.

Ambulance means a vehicle used for emergency medical care that provides all of the following:

(1) A driver's compartment.

(2) A patient compartment to accommodate an emergency medical services provider and one patient located on the primary cot so positioned that the primary patient can be given intensive life-support during transit.

(3) Equipment and supplies for emergency care at the scene as well as during transport.

(4) Safety, comfort, and avoidance of aggravation of the patient's injury or illness.

(5) Two-way radio communication.

(6) Audible and visual traffic warning devices.

Approach angle means the smallest angle in a plan side view of an automobile, formed by the level surface on which the automobile is standing and a line tangent to the front tire static

loaded radius arc and touching the underside of the automobile forward of the front tire.

As-received condition means the condition of an in-use vehicle procured for emission testing required by this subpart upon which no adjustments, maintenance, or component replacement has occurred subsequent to the vehicle's last routine operation by the vehicle's owner, lessee, or operator prior to procurement.

Auxiliary Emission Control Device (AECD) means any element of design which senses temperature, vehicle speed, engine RPM, transmission gear, manifold vacuum, or any other parameter for the purpose of activating, modulating, delaying, or deactivating the operation of any part of the emission control system.

Averaging for chassis-bases heavy-duty vehicles means the exchange of NO_X emission credits among test groups within a given manufacturer's product line.

Averaging set means a category or subcategory of vehicles within which test groups can average and trade emission credits with one another.

Axle clearance means the vertical distance from the level surface on which an automobile is standing to the lowest point on the axle differential of the automobile.

Banking means one of the following:

(1) The retention of NO_X emission credits for complete heavy-duty vehicles by the manufacturer generating the emission credits, for use in future model year certification programs as permitted by regulation.

(2) The retention of cold temperature non-methane hydrocarbon (NMHC) emission credits for light-duty vehicles, light-duty trucks, and medium-duty passenger vehicles by the manufacturer generating the emission credits, for use in future model year certification programs as permitted by regulation.

(3) The retention of NO_X emission credits for light-duty vehicles, light-duty trucks, and medium-duty passenger vehicles for use in future model year certification programs as permitted by regulation.

(4) The retention of CO_2 emission credits for light-duty vehicles, light-duty trucks, and medium-duty passenger vehicles for use in future model year certification programs as permitted by regulation.

Base level has the meaning given in 40 CFR 600.002 for LDV, LDT, and MDPV. See § 86.1819–14 for heavy-duty vehicles.

Base tire has the meaning given in 40 CFR 600.002 for LDV, LDT, and MDPV.

Base vehicle has the meaning given in 40 CFR 600.002 for LDV, LDT, and MDPV.

Basic engine has the meaning given in 40 CFR 600.002.

Basic vehicle frontal area means the area enclosed by the geometric projection of the basic vehicle along the longitudinal axis, which includes tires but excludes mirrors and air deflectors, onto a plane perpendicular to the longitudinal axis of the vehicle.

Bi-directional control means the capability of a diagnostic tool to send messages on the data bus that temporarily overrides the module's control over a sensor or actuator and gives control to the diagnostic tool operator. Bi-directional controls do not create permanent changes to engine or component calibrations.

Bin or *emission bin* means a set of emission standards applicable to exhaust pollutants measured on the Federal Test Procedure (FTP). A bin is equivalent to a horizontal row of FTP standards in Tables S04–1 and S04–2 shown in this subpart. Manufacturers are generally free to choose the bin of standards that will apply to a certain test group of vehicles, provided that on a sales weighted average of those bins, all of their vehicles meet a specified fleet average standard for a particular pollutant.

Body style means a level of commonality in vehicle construction as defined by number of doors and roof treatment (e.g., sedan, convertible, fastback, hatchback).

Body type means a name denoting a group of vehicles that are either in the same car line or in different car lines provided the only reason the vehicles qualify to be considered in different car lines is that they are produced by a separate division of a single manufacturer.

Breakover angle means the supplement of the largest angle, in the plan

side view of an automobile, that can be formed by two lines tangent to the front and rear static loaded radii arcs and intersecting at a point on the underside of the automobile.

Cab-complete vehicle means a heavy-duty vehicle that is first sold as an incomplete vehicle that substantially includes its cab. Vehicles known commercially as chassis-cabs, cab-chassis, box-deletes, bed-deletes, cut-away vans are considered cab-complete vehicles. For purposes of this definition, a cab includes a steering column and passenger compartment. Note that a vehicle lacking some components of the cab is a cab-complete vehicle if it substantially includes the cab.

Calibration means the set of specifications, including tolerances, unique to a particular design, version, or application of a component or components assembly capable of functionally describing its operation over its working range.

Calibration gas means a gas of known concentration which is used to establish the response curve of an analyzer.

CalLEV II or *California LEV II* refers to California's second phase of its low emission vehicle (LEV) program. This program was adopted at the hearing of the California Air Resources Board held on November 5, 1998 and became effective on November 27, 1999.

Candidate in-use vehicle means an in-use vehicle which would be eligible to participate in the in-use verification program in accordance with § 86.1845–01.

Carbon-related exhaust emissions (CREE) has the meaning given in 40 CFR 600.002 for LDV, LDT, and MDPV.

Car line means a name denoting a group of vehicles within a make or car division which has a degree of commonality in construction (e.g., body, chassis). Car line does not consider any level of decor or opulence and is not generally distinguished by characteristics as roofline, number of doors, seats, or windows except for station wagons or light-duty trucks. Station wagons, light-duty trucks, and complete heavy-duty vehicles are considered to be different car lines than passenger cars.

Class 2b means relating to heavy-duty vehicles at or below 10,000 pounds GVWR.

Class 3 means relating to heavy-duty vehicles above 10,000 pounds GVWR and at or below 14,000 pounds GVWR.

Combined CO_2 means the CO_2 value determined for a vehicle (or vehicles) by averaging the city and highway CO_2 values, weighted 0.55 and 0.45 respectively.

Combined CREE means the CREE value determined for a vehicle (or vehicles) by averaging the city and highway fuel CREE values, weighted 0.55 and 0.45 respectively.

Configuration means one of the following:

(1) For LDV, LDT, and MDPV, *configuration* means a subclassification within a test group which is based on engine code, inertia weight class, transmission type and gear ratios, final drive ratio, and other parameters which may be designated by the Administrator.

(2) For HDV, *configuration* has the meaning given in § 86.1819–14(d)(12).

Conveniently available service facility and spare parts for small-volume manufacturers means that the vehicle manufacturer has a qualified service facility at or near the authorized point of sale or delivery of its vehicles and maintains an inventory of all emission-related spare parts or has made arrangements for the part manufacturers to supply the parts by expedited shipment (e.g., utilizing overnight express delivery service, UPS, etc.).

Crankcase emissions means airborne substances emitted to the atmosphere from any portion of the engine crankcase ventilation or lubrication systems.

Critical emission-related components are those components which are designed primarily for emission control, or whose failure may result in a significant increase in emissions accompanied by no significant impairment (or perhaps even an improvement) in performance, driveability, and/or fuel economy as determined by the Administrator.

Critical emission-related maintenance means that maintenance to be performed on critical emission-related components.

Curb weight means the actual or the manufacturer's estimated weight of the vehicle in operational status with all

standard equipment, and weight of fuel at nominal tank capacity, and the weight of optional equipment computed in accordance with § 86.1832–01; incomplete light-duty trucks shall have the curb weight specified by the manufacturer.

Curb-idle means, for manual transmission code motor vehicles, the engine speed with the transmission in neutral or with the clutch disengaged and with the air conditioning system, if present, turned off. For automatic transmission code motor vehicles, curb-idle means the engine speed with the automatic transmission in the park position (or neutral position if there is no park position), and with the air conditioning system, if present, turned off.

Data stream information means information (i.e., messages and parameters) originated within the vehicle by a module or intelligent sensors (i.e., a sensor that contains and is controlled by its own module) and transmitted between a network of modules and/or intelligent sensors connected in parallel with either one or two communication wires. The information is broadcast over the communication wires for use by other modules (e.g., chassis, transmission, etc.) to conduct normal vehicle operation or for use by diagnostic tools. Data stream information does not include engine calibration related information.

Dedicated vehicle means any motor vehicle engineered and designed to be operated using a single fuel. Flexible fuel vehicles and multi-fuel vehicles are not dedicated vehicles.

Defeat device means an auxiliary emission control device (AECD) that reduces the effectiveness of the emission control system under conditions which may reasonably be expected to be encountered in normal vehicle operation and use, unless:

(1) Such conditions are substantially included in the Federal emission test procedure;

(2) The need for the AECD is justified in terms of protecting the vehicle against damage or accident;

(3) The AECD does not go beyond the requirements of engine starting; or

(4) The AECD applies only for *emergency vehicles* and the need is justified in terms of preventing the vehicle from losing speed, torque, or power due to abnormal conditions of the emission control system, or in terms of preventing such abnormal conditions from occurring, during operation related to emergency response. Examples of such abnormal conditions may include excessive exhaust backpressure from an overloaded particulate trap, and running out of diesel exhaust fluid for engines that rely on urea-based selective catalytic reduction.

Departure angle means the smallest angle, in a plan side view of a motor vehicle, formed by the level surface on which the motor vehicle is standing and a line tangent to the rear tire static loaded radius arc and touching the underside of the motor vehicle rearward of the rear tire.

Diesel means a type of engine with operating characteristics significantly similar to the theoretical Diesel combustion cycle. The non-use of a throttle during normal operation is indicative of a diesel engine.

Diesel exhaust fluid (DEF) means a liquid reducing agent (other than the engine fuel) used in conjunction with selective catalytic reduction to reduce NO_X emissions. *Diesel exhaust fluid* is generally understood to be an aqueous solution of urea conforming to the specifications of ISO 22241.

Dispensed fuel temperature means the temperature (deg. F or deg. C may be used) of the fuel being dispensed into the tank of the test vehicle during a refueling test.

Diurnal breathing losses means diurnal emissions.

Diurnal emissions means evaporative emissions resulting from the daily cycling of ambient temperatures.

Drive train configuration means a unique combination of engine code, transmission configuration, and axle ratio.

Dual fuel vehicle means any motor vehicle engineered and designed to be operated on two different fuels, but not on a mixture of the fuels.

Durability data vehicle means a vehicle used to generate durability data as required in this subpart.

Durability group means the basic classification unit of a manufacturer's

product line used for the purpose of selecting a vehicle configuration to demonstrate durability and predict deterioration in accordance with § 86.1822–01.

Durability useful life means the highest useful life mileage out of the set of all useful life mileages that apply to a given vehicle. The durability useful life determines the duration of service accumulation on a durability data vehicle. The determination of durability useful life shall reflect any light-duty truck or complete heavy-duty vehicle alternative useful life periods approved by the Administrator under § 86.1805–01(c). The determination of durability useful life shall exclude any standard and related useful life mileage for which the manufacturer has obtained a waiver of emission data submission requirements under § 86.1829–01.

Electric vehicle means a motor vehicle that is powered solely by an electric motor drawing current from a rechargeable energy storage system, such as from storage batteries or other portable electrical energy storage devices, including hydrogen fuel cells, provided that:

(1) The vehicle is capable of drawing recharge energy from a source off the vehicle, such as residential electric service; and

(2) The vehicle must be certified to the emission standards of Bin #1 of Table S04–1 in § 86.1811–09(c)(6).

(3) The vehicle does not have an onboard combustion engine/generator system as a means of providing electrical energy.

Element of design means any control system (i.e., computer software, electronic control system, emission control system, computer logic), and/or control system calibrations, and/or the results of systems interaction, and/ or hardware items on a motor vehicle or motor vehicle engine.

Emergency vehicle means one of the following:

(1) For the greenhouse gas emission standards in § 86.1818, *emergency vehicle* means a motor vehicle manufactured primarily for use as an ambulance or combination ambulance-hearse or for use by the United States Government or a State or local government for law enforcement.

(2) For the OBD requirements in § 86.1806, emergency vehicle means a motor vehicle manufactured primarily for use in medical response or for use by the U.S. Government or a State or local government for law enforcement or fire protection.

(3) For other provisions under this subpart, *emergency vehicle* means a motor vehicle that is either—

(i) An ambulance or a fire truck; or

(ii) A vehicle that we have determined will likely be used in emergency situations where emission control function or malfunction may cause a significant risk to human life. For example, we would consider a pickup truck that is certain to be retrofitted with a slip-on firefighting module to be an emergency vehicle, even though it was not initially designed to be a fire truck. Also, a mobile command center that is unable to manually regenerate its DPF while on duty could be an emergency vehicle. In making this determination, we may consider any factor that has an effect on the totality of the actual risk to human life. For example, we may consider how frequently a vehicle will be used in emergency situations or how likely it is that the emission controls will cause a significant risk to human life when the vehicle is used in emergency situations. We would not consider the pickup truck in the example above to be an emergency vehicle if there is merely a possibility (rather than a certainty) that the vehicle will be retrofitted with a slip-on firefighting module.

Emission control system is a unique group of emission control devices, auxiliary emission control devices, engine modifications and strategies, and other elements of design designated by the Administrator used to control exhaust emissions of a vehicle.

Emission credits mean the amount of emission reductions or exceedances, by a complete heavy-duty vehicle test group, below or above the emission standard, respectively. Emission credits below the standard are considered as ''positive credits,'' while emission credits above the standard are considered as ''negative credits.'' In addition, ''projected credits'' refer to emission

credits based on the projected U.S. production volume of the test group. ''Reserved credits'' are emission credits generated within a model year waiting to be reported to EPA at the end of the model year. ''Actual credits'' refer to emission credits based on actual U.S. production volumes as contained in the end-of-year reports submitted to EPA. Some or all of these credits may be revoked if EPA review of the end of year reports or any subsequent audit actions uncover problems or errors.

Emission-related component means any component which can affect emissions.

Emission-related maintenance means that maintenance which does substantially affect emissions or which is likely to affect the emissions deterioration of the vehicle during normal in-use operation, even if the maintenance is performed at some time other than that which is recommended.

Engine code means one of the following:

(1) For LDV, LDT, and MDPV, *engine code* means a unique combination within a test group of displacement, fuel injection (or carburetor) calibration, choke calibration, distributor calibration, auxiliary emission control devices, and other engine and emission control system components specified by the Administrator. For electric vehicles, engine code means a unique combination of manufacturer, electric traction motor, motor configuration, motor controller, and energy storage device.

(2) For HDV, *engine code* has the meaning given in § 86.1819–14(d)(12).

Engine warm-up cycle means sufficient vehicle operation such that the coolant temperature has risen by at least 40 deg. F from engine starting and reaches a minimum temperature of 160 deg. F.

Environmental test cell means a test cell capable of wind-speed, solar thermal load, ambient temperature, and humidity control or simulation which meets the requirements of § 86.161–00 for running emission tests with the air conditioning operating.

EPA Enforcement Officer means any officer or employee of the Environmental Protection Agency so designated in writing by the Administrator (or by his/her designee).

Equivalent test weight means the weight, within an inertia weight class, which is used in the dynamometer testing of a vehicle and which is based on its loaded vehicle weight or adjusted loaded vehicle weight in accordance with the provisions of this part.

Ethanol-fueled vehicle means any motor vehicle or motor vehicle engine that is engineered and designed to be operated using ethanol fuel (*i.e.*, a fuel that contains at least 50 percent ethanol (C_2H_5OH) by volume) as fuel.

Evaporative emissions means hydrocarbons emitted into the atmosphere from a motor vehicle, other than exhaust and crankcase emissions.

Evaporative/refueling control system means a unique combination within an evaporative/refueling family of canister adsorptive material, purge system configuration, purge strategy, and other parameters determined by the Administrator to affect evaporative and refueling emission control system durability or deterioration factors.

Evaporative/refueling emission code means a unique combination, in an evaporative/refueling family-evaporative emission control system combination, of purge system calibrations, fuel tank and carburetor bowl vent calibrations and other fuel system and evaporative emission control system components and calibrations specified by the Administrator.

Evaporative/refueling family means the basic classification unit of a manufacturers' product line used for the purpose of evaporative and refueling emissions test fleet selection and determined in accordance with § 86.1821–01.

Evaporative/refueling vehicle configuration means a unique combination of basic engine, engine code, body type, and evaporative emission code.

Exhaust emissions means substances emitted to the atmosphere from any opening downstream from the exhaust port of a motor vehicle engine.

Exhaust gas recirculation valve means a device which directs a portion of the exhaust gas into the intake air stream for the purpose of controlling emissions.

Family emission limit (FEL) means a bin standard or emission level selected by the manufacturer that serves as the applicable emission standard for the

vehicles in the family or test group in the context of fleet-average standards or emission credits.

Federal Test Procedure has the meaning given in 40 CFR 1066.801(c)(1)(i).

Fire truck means a vehicle designed to be used under emergency conditions to transport personnel and equipment and to support the suppression of fires and mitigation of other hazardous situations.

Fixed liquid level gauge means a type of liquid level gauge used on liquefied petroleum gas-fueled vehicles which uses a relatively small positive shutoff valve and is designed to indicate when the liquid level in the fuel tank being filled reaches the proper fill level. The venting of fuel vapor and/or liquid fuel to the atmosphere during the refueling event is generally associated with the use of the fixed liquid level gauge.

Fleet average cold temperature NMHC standard means, for light-duty vehicles, light-duty trucks and medium-duty passenger vehicles, an NMHC cold temperature standard imposed over an individual manufacturer's total 50-State U.S. sales (or a fraction of total U.S. sales during phase-in years), as ''U.S. sales'' is defined to include all national sales, including points-of-first sale in California, of a given model year. Manufacturers determine their compliance with such a standard by averaging, on a sales-weighted basis, the individual NMHC ''Family Emission Limits'' (FEL—as defined in this subpart) to which light-duty vehicles, light-duty trucks and medium-duty passenger vehicles were certified and sold for that model year.

Fleet average NO_X standard means, for light-duty vehicles, light-duty trucks and medium-duty passenger vehicles, a NO_X standard imposed over an individual manufacturer's total U.S. sales (or a fraction of total U.S. sales during phase-in years), as 'U.S. sales' is defined in this subpart, of a given model year. Manufacturers determine their compliance with such a standard by averaging, on a sales weighted basis, the individual NO_X standards they choose for the fleet of light-duty vehicles, light-duty trucks and medium-duty passenger vehicles they sell of that model year.

Flexible fuel vehicle means any motor vehicle engineered and designed to be operated on a petroleum fuel and on a methanol or ethanol fuel, or any mixture of the petroleum fuel and methanol or ethanol. Methanol-fueled and ethanol-fueled vehicles that are only marginally functional when using gasoline (*e.g.*, the engine has a drop in rated horsepower of more than 80 percent) are not flexible fuel vehicles.

Footprint is the product of average track width (rounded to the nearest tenth of an inch) and wheelbase (measured in inches and rounded to the nearest tenth of an inch), divided by 144 and then rounded to the nearest tenth of a square foot, where the average track width is the average of the front and rear track widths, where each is measured in inches and rounded to the nearest tenth of an inch.

Fuel cell vehicle means an electric vehicle propelled solely by an electric motor where energy for the motor is supplied by an electrochemical cell that produces electricity via the non-combustion reaction of a consumable fuel, typically hydrogen.

Fuel system means the combination of fuel tank(s), fuel pump, fuel lines, and carburetor or fuel injection components, and includes all fuel system vents and fuel evaporative emission control system components.

Full size pickup truck means a light truck which has a passenger compartment and an open cargo box and which meets the following specifications:

(1) A minimum cargo bed width between the wheelhouses of 48 inches, measured as the minimum lateral distance between the limiting interferences (pass-through) of the wheelhouses. The measurement shall exclude the transitional arc, local protrusions, and depressions or pockets, if present. An open cargo box means a vehicle where the cargo box does not have a permanent roof or cover. Vehicles produced with detachable covers are considered ''open'' for the purposes of these criteria.

(2) A minimum open cargo box length of 60 inches, where the length is defined by the lesser of the pickup bed length at the top of the body or the pickup bed length at the floor, where the length at the top of the body is defined

as the longitudinal distance from the inside front of the pickup bed to the inside of the closed endgate as measured at the height of the top of the open pickup bed along vehicle centerline, and the length at the floor is defined as the longitudinal distance from the inside front of the pickup bed to the inside of the closed endgate as measured at the cargo floor surface along vehicle centerline.

(3)(i) A minimum towing capability of 5,000 pounds, where minimum towing capability is determined by subtracting the gross vehicle weight rating from the gross combined weight rating; or

(ii) A minimum payload capability of 1,700 pounds, where minimum payload capability is determined by subtracting the curb weight from the gross vehicle weight rating.

Gaseous fuel means natural gas or liquefied petroleum gas.

Good engineering judgment has the meaning given in 40 CFR 1068.30. *See* 40 CFR 1068.5 for the administrative process we use to evaluate good engineering judgment.

Gross combination weight rating (GCWR) means the value specified by the vehicle manufacturer as the maximum weight of a loaded vehicle and trailer, consistent with good engineering judgment.

Gross vehicle weight means the manufacturer's gross weight rating for the individual vehicle.

Gross vehicle weight rating (GVWR) means the value specified by the manufacturer as the maximum design loaded weight of a single vehicle, consistent with good engineering judgment.

Hang-up refers to the process of hydrocarbon molecules being adsorbed, condensed, or by any other method removed from the sample flow prior to reaching the instrument detector. It also refers to any subsequent desorption of the molecules into the sample flow when they are assumed to be absent.

Heating degree day means the number of degrees per day the daily average temperature is below 65 degrees Fahrenheit. The daily average temperature is the mean of the maximum and minimum temperature for a 24-hour period. The annual heating degree day value is derived by summing the daily heating degree days over a calendar year period.

Heavy light-duty truck means any light-duty truck rated greater than 6000 lbs GVWR. The LDT3 and LDT4 classifications comprise the heavy light-duty truck category.

Heavy-duty engine means any engine which the engine manufacturer could reasonably expect to be used for motive power in a heavy-duty vehicle.

Heavy-duty vehicle means any motor vehicle rated at more than 8,500 pounds GVWR or that has a vehicle curb weight of more than 6,000 pounds or that has a basic vehicle frontal area in excess of 45 square feet. Note that MDPVs are heavy-duty vehicles that are in many cases subject to requirements that apply for light-duty trucks.

High altitude means any elevation over 1,219 meters (4,000 feet).

High-altitude conditions means a test altitude of 1,620 meters (5,315 feet), plus or minus 100 meters (328 feet), or equivalent observed barometric test conditions of 83.3 kPa (24.2 inches Hg) plus or minus 1 kPa (0.30 Hg).

Highway Fuel Economy Test Procedure (HFET) has the meaning given in 40 CFR 1066.801(c)(3).

Hot-soak emissions and *Hot-soak losses* means evaporative emissions after termination of engine operation.

Hybrid electric vehicle (HEV) means a motor vehicle which draws propulsion energy from onboard sources of stored energy that are both an internal combustion engine or heat engine using consumable fuel, and a rechargeable energy storage system such as a battery, capacitor, hydraulic accumulator, or flywheel. This includes plug-in hybrid electric vehicles.

Indirect information means any information that is not specifically contained in the service literature, but is contained in items such as tools or equipment provided to franchised dealers (or others).

Inertia weight class means the class, which is a group of equivalent test weights, into which a vehicle is grouped based on its test weight basis in accordance with the provisions of this part 86.

Integrated refueling emission control system means a system where vapors resulting from refueling are stored in a

common vapor storage unit(s) with other evaporative emissions of the vehicle and are purged through a common purge system.

Interim non-Tier 2 vehicle, interim non-Tier 2 LDV/LLDT, interim non-Tier 2 HLDT/MDPV, or *interim vehicle* refer to 2004 or later model year light-duty vehicles, light-duty trucks or MDPVs, or a specific combination thereof, not certified to Tier 2 FTP exhaust emission standards during the Tier 2 phase-in period. Model year 2004 HLDTs belonging to test groups whose model year commences before December 21, 2003, are not interim non-Tier 2 HLDTs unless their manufacturer chooses to comply with the interim requirements applicable to HLDTs for all of its 2004 model year HLDTs as permitted in this subpart. Similarly 2004 model year heavy-duty vehicles whose model year commences before December 21, 2003, are not interim non-Tier 2 MDPVs unless their manufacturer chooses to comply with the interim requirements applicable to MDPVs for all of its 2004 model year MDPVs as permitted in this subpart. The terms *interim non-Tier 2 vehicle, interim non-Tier 2 LDV, interim non-Tier 2 LDT, interim non-Tier 2 HLDT, interim non-Tier 2 MDPV*, etc. have the same meaning without the words ''non-Tier 2''.

Interior volume index has the meaning given in § 600.315–08 of this chapter.

Intermediary means any individual or entity, other than a manufacturer, which provides service or equipment to automotive technicians.

Intermediate temperature cold testing means testing done pursuant to the driving cycle and testing conditions contained in subpart C of this part, at temperatures between 25 deg.F (−4 deg. C) and 68 deg. F (20 deg. C).

In-use vehicle means a customer owned and operated vehicle which is not under the control of the manufacturer, dealerships or their agents. Leased vehicles will be considered in-use vehicles for the purpose of this subpart if the vehicles meet the criteria specified in § 86.1845–01.

In-use verification program (IUVP) means the testing program conducted by manufacturers which gathers in-use emission data in accordance with § 86.1848–01.

LDV/T means light-duty vehicles and light-duty trucks collectively, without regard to category.

LEV III means relating to the LEV III emission standards in Title 13, §§ 1961.2 and 1976 of the California Code of Regulations, as adopted by the California Air Resources Board (incorporated by reference in § 86.1).

Light light-duty truck means any light-duty truck rated up through 6000 lbs GVWR. The LDT1 and LDT2 classifications compose the light light-duty truck category.

Light-duty truck means any motor vehicle rated at 8,500 pounds GVWR or less which has a curb weight of 6,000 pounds or less and which has a basic vehicle frontal area of 45 square feet or less, which is:

(1) Designed primarily for purposes of transportation of property or is a derivation of such a vehicle; or

(2) Designed primarily for transportation of persons and has a capacity of more than 12 persons; or

(3) Available with special features enabling off-street or off-highway operation and use.

Light-duty truck 1 (LDT1) means any light light-duty truck up through 3750 lbs loaded vehicle weight.

Light-duty truck 2 (LDT2) means any light light-duty truck greater than 3750 lbs loaded vehicle weight.

Light-duty truck 3 (LDT3) means any heavy light-duty truck up through 5750 lbs adjusted loaded vehicle weight.

Light-duty truck 4 (LDT4) means any heavy light-duty truck greater than 5750 lbs adjusted loaded vehicle weight.

Light-duty vehicle means a passenger car or passenger car derivative capable of seating 12 passengers or less.

Liquefied petroleum gas means a liquid hydrocarbon fuel that is stored under pressure and is composed primarily of species that are gases at atmospheric conditions (temperature = 25 deg. C and pressure = 1 atm), excluding natural gas.

Loaded vehicle weight means the vehicle's curb weight plus 300 pounds.

Low altitude means any elevation equal to or less than 1,219 meters (4,000 feet).

Low-altitude conditions means a test altitude less than 549 meters (1,800 feet).

Malfunction means not operating according to specifications (e.g., those specifications listed in the certification application).

Medium-duty passenger vehicle (MDPV) means any heavy-duty vehicle (as defined in this subpart) with a gross vehicle weight rating (GVWR) of less than 10,000 pounds that is designed primarily for the transportation of persons. The MDPV definition does not include any vehicle which:

(1) Is an ''incomplete truck'' as defined in this subpart; or

(2) Has a seating capacity of more than 12 persons; or

(3) Is designed for more than 9 persons in seating rearward of the driver's seat; or

(4) Is equipped with an open cargo area (for example, a pick-up truck box or bed) of 72.0 inches in interior length or more. A covered box not readily accessible from the passenger compartment will be considered an open cargo area for purposes of this definition.

Methanol-fueled vehicle means any motor vehicle or motor vehicle engine that is engineered and designed to be operated using methanol fuel (i.e., a fuel that contains at least 50 percent methanol (CH3OH) by volume) as fuel. Model means a specific combination of car line, body style, and drivetrain configuration.

Mild hybrid electric vehicle means a hybrid electric vehicle that has start/stop capability and regenerative braking capability, where the recovered energy over the Federal Test Procedure is at least 15 percent but less than 65 percent of the total braking energy, as measured and calculated according to 40 CFR 600.116–12(d).

Model type has the meaning given in 40 CFR 600.002 for LDV, LDT, and MDPV.

Model year means the manufacturer's annual production period (as determined by the Administrator) which includes January 1 of such calendar year: Provided that if the manufacturer has no annual production period, the term ''model year'' shall mean the calendar year.

Motor vehicle has the meaning given in § 85.1703 of this chapter.

Multi-fuel means capable of operating on two or more different fuel types, either separately or simultaneously.

Multi-fuel vehicle means any motor vehicle capable of operating on two or more different fuel types, either separately or simultaneously.

Natural gas means a fuel whose primary constituent is methane.

Nominal fuel tank capacity means the volume of the fuel tank(s), specified by the manufacturer to the nearest tenth of a U.S. gallon, which may be filled with fuel from the fuel tank filler inlet.

Non-emission-related maintenance means that maintenance which does not substantially affect emissions and which does not have a lasting effect on the emissions deterioration of the vehicle or engine during normal in-use operation once the maintenance is performed.

Non-integrated refueling emission control system means a system where fuel vapors from refueling are stored in a vapor storage unit assigned solely to the function of storing refueling vapors.

Non-Methane Hydrocarbon Equivalent means the sum of the carbon mass emissions of non-oxygenated non-methane hydrocarbons, methanol, formaldehyde, or other organic compounds that are separately measured, expressed as gasoline-fueled vehicle hydrocarbons. In the case of exhaust emissions, the hydrogen-to-carbon ratio of the equivalent hydrocarbon is 1.85:1. In the case of diurnal and hot soak emissions, the hydrogen-to-carbon ratios of the equivalent hydrocarbons are 2.33:1 and 2.2:1, respectively.

Non-methane organic gases (NMOG) means the sum of oxygenated and non-oxygenated hydrocarbons contained in a gas sample as measured using the procedures described in 40 CFR 1066.635.

Non-oxygenated hydrocarbon means organic emissions measured by a flame ionization detector, excluding methanol.

N/V means the ratio of engine speed in revolutions per minute (rpm) to vehicle speed in miles per hour in the top transmission gear. At the manufacturer's option, either the 1:1 transmission gear ratio or the lowest numerical gear

ratio available in the transmission will be used to determine N/V.

Option, in the context of a vehicle design feature, means any available equipment or feature not standard equipment on a model.

Original Equipment Manufacturer (OEM) means the manufacturer responsible for the design and production of a vehicle or component. This manufacturer will be fully knowledgeable of any production changes made to the design of the vehicle or component and shall be able to track the individual vehicles or component with regard to such production changes.

Otto-cycle means type of engine with operating characteristics significantly similar to the theoretical Otto combustion cycle. The use of a throttle during normal operation is indicative of an Otto-cycle engine.

Oxides of nitrogen means the sum of the nitric oxide and nitrogen dioxide contained in a gas sample as if the nitric oxide were in the form of nitrogen dioxide.

Periodically regenerating trap oxidizer system means a trap oxidizer that utilizes, during normal driving conditions, an automated regeneration mode for cleaning the trap, the operation of which can be easily detected.

Petroleum equivalency factor means the value specified in 10 CFR 474.3(b), which incorporates the parameters listed in 49 U.S.C. 32904(a)(2)(B) and is used to calculate petroleum-equivalent fuel economy.

Petroleum-equivalent fuel economy means the value, expressed in miles per gallon, that is calculated for an electric vehicle in accordance with 10 CFR 474.3(a), and reported to the Administrator of the Environmental Protection Agency for use in determining the vehicle manufacturer's corporate average fuel economy.

Petroleum fuel means liquid fuels normally derived from crude oil, excluding liquefied petroleum gas. Gasoline and diesel fuel are petroleum fuels.

Petroleum-powered accessory means a vehicle accessory (*e.g.*, a cabin heater, defroster, and/or air conditioner) that:

(1) Uses gasoline or diesel fuel as its primary energy source; and

(2) Meets the requirements for fuel, operation, and emissions in § 88.104–94(g) of this chapter.

Platform means a segment of an automobile manufacturer's vehicle fleet in which the vehicles have a degree of commonality in construction (primarily in terms of body and chassis design). Platform does not consider the model name, brand, marketing division, or level of decor or opulence, and is not generally distinguished by such characteristics as powertrain, roof line, number of doors, seats, or windows. A platform may include vehicles from various fuel economy classes, and may include light-duty vehicles, light-duty trucks, and medium-duty passenger vehicles.

Plug-in hybrid electric vehicle (PHEV) means a hybrid electric vehicle that has the capability to charge the battery from an off-vehicle electric source, such that the off-vehicle source cannot be connected to the vehicle while the vehicle is in motion.

Point of first sale means the location where the completed vehicle is first purchased. This term is synonymous with final product purchase location. The point of first sale may be a retail customer, dealer, distributor, fleet operator, broker, secondary manufacturer, or any other entity which purchases a vehicle from a manufacturer. In cases where the end user purchases the completed vehicle directly from the manufacturer, the end user is the point of first sale.

Precision means the standard deviation of replicated measurements.

Production volume has the meaning given in 40 CFR 600.002.

Proven emission control systems are emission control components or systems (and fuel metering systems) that have completed full durability testing evaluation over a vehicle's useful life in some other certified test group, or have completed bench or road testing demonstrated to be equal or more severe than certification mileage accumulation requirements. Alternatively, proven components or systems are those that are determined by EPA to be of comparable functional quality and manufactured using comparable materials and production techniques as components or systems which have

been durability demonstrated in some other certified test group. In addition, the components or systems must be employed in an operating environment (e.g., temperature, exhaust flow, etc.,) similar to that experienced by the original or comparable components or systems in the original certified test group.

Rated power means an engine's maximum power output in an installed configuration, as determined by using SAE J1349 (incorporated by reference in § 86.1).

Recall program means the program administered by the Agency under the authority of CAA section 207, and regulations in 40 CFR part 85.

Reconfigured emission-data vehicle means an emission-data vehicle obtained by modifying a previously used emission-data vehicle to represent another emission-data vehicle.

Refueling emissions means evaporative emissions that emanate from a motor vehicle fuel tank(s) during a refueling operation.

Refueling emissions canister(s) means any vapor storage unit(s) that is exposed to the vapors generated during refueling.

Resting losses means evaporative emissions that may occur continuously, that are not diurnal emissions, hot soak emissions, refueling emissions, running losses, or spitback emissions.

Round (rounded, rounding) has the meaning given in 40 CFR 1065.1001, unless otherwise specified.

Running change means a change to a vehicle or addition of a model which occurs after certification but during vehicle production.

Running losses means evaporative emissions that occur during vehicle operation.

SC03 means the test cycle, described in § 86.160–00 and listed in appendix I, paragraph (h), of this part, which is designed to represent driving immediately following startup.

Scheduled maintenance means any adjustment, repair, removal, disassembly, cleaning, or replacement of vehicle components or systems which is performed on a periodic basis to prevent part failure or vehicle (if the engine were installed in a vehicle) malfunction, or anticipated as necessary from inspection to correct an overt indication of vehicle malfunction or failure for which periodic maintenance is not appropriate.

Secondary air injection means a system whereby air (not ingested by the engine) is introduced into the exhaust system in front of a catalyst.

Section 177 states means the states that have adopted California's motor vehicle standards for a particular model year under section 177 of the Clean Air Act (42 U.S.C. 7507).

Similar emission control systems are engine, fuel metering and emission control system combinations which use the same fuel (e.g., gasoline, diesel, etc.), combustion cycle (e.g., two or four stroke), general type of fuel system (e.g., carburetor or fuel injection), catalyst system (e.g., none, oxidization, three-way plus oxidization, three-way only, etc.), fuel control system (e.g., feedback or non-feedback), secondary air system (e.g., equipped or not equipped) and exhaust gas recirculation (EGR) (e.g., equipped or not equipped).

Span gas means a gas of known concentration which is used routinely to set the output level of an analyzer.

Special features enabling off-street or off-highway operation and use means a vehicle that has:

(1) Four-wheel drive; and

(2) At least four of the following characteristics calculated when the automobile is at curb weight, on a level surface, with the front wheels parallel to the vehicle's longitudinal centerline, and the tires inflated to the manufacturer's recommended pressure; approach angle of not less than 28 degrees, breakover angle of not less than 14 degrees, departure angle of not less than 20 degrees, running clearance of not less than 8 inches, and front and rear axle clearances of not less than 7 inches each.

Spitback emissions means evaporative emissions resulting from the loss of liquid fuel that is emitted from a vehicle during a fueling operation.

Standard equipment means those features or equipment which are marketed on a vehicle over which the purchaser can exercise no choice.

Static loaded radius arc means a portion of a circle whose center is the center of a standard tire-rim combination of an automobile and whose radius is the distance from that center to the level surface on which the automobile is standing, measured with the automobile at curb weight, the wheel parallel to the vehicle's longitudinal centerline, and the tire inflated to the manufacturer's recommended pressure.

Strong hybrid electric vehicle means a hybrid electric vehicle that has start/stop capability and regenerative braking capability, where the recovered energy over the Federal Test Procedure is at least 65 percent of the total braking energy, as measured and calculated according to 40 CFR 600.116–12(d).

Subconfiguration means one of the following:

(1) For LDV, LDT, and MDPV, *subconfiguration* has the meaning given in 40 CFR 600.002.

(2) For HDV, *subconfiguration* has the meaning given in § 86.1819–14(d)(12).

Supplemental FTP (SFTP) means the additional test procedures designed to measure emissions during aggressive and microtransient driving, as described in § 86.159–00 over the US06 cycle, and also the test procedure designed to measure urban driving emissions while the vehicle's air conditioning system is operating, as described in § 86.160–00 over the SC03 cycle.

Tank fuel volume means the volume of fuel in the fuel tank(s), which is determined by taking the manufacturer's nominal fuel tank(s) capacity and multiplying by 0.40. The result is rounded to the nearest tenth of a U.S. gallon in accordance with the Rounding-Off Method specified in ASTM E29–93a, Standard Practice for Using Significant Digits in Test Data to Determine Conformance with Specifications (incorporated by reference; see § 86.1)

Test group means the basic classification unit within a durability group used for the purpose of demonstrating compliance with exhaust emission standards in accordance with § 86.1841–01. The test group is also used as a classification unit for gathering in-use data for the In-Use Verification Program (IUVP) in accordance with § 86.1848–01.

Test weight basis means the basis on which equivalent test weight is determined in accordance with § 86.129–00 of subpart B of this part.

Throttle means a device used to control an engine's power output by limiting the amount of air entering the combustion chamber.

Tier 2 HLDT/MDPV means any heavy light-duty truck or medium-duty passenger vehicle, including HEVs and ZEVs, of the 2008 or later model year certified to comply with the Tier 2 FTP exhaust standards contained in § 86.1811–04 including the 0.07 g/mi fleet average NO_X standard. The term Tier 2 HLDT/MDPV also includes any heavy light-duty truck or medium-duty passenger vehicle, of any model year, which is certified to Tier 2 FTP exhaust standards for purposes of generating or banking early NO_X credits for averaging under Tier 2 requirements, or utilizing alternate phase-in schedules, as allowed in this subpart.

Tier 2 LDV/LLDT means any light-duty vehicle or light light-duty truck, including HEVs and ZEVs, of the 2004 or later model year certified to comply with the Tier 2 FTP exhaust standards contained in § 86.1811–04 including the 0.07 g/mi fleet average NO_X standard. The term Tier 2 LDV/LLDT also includes any light-duty vehicle or light light-duty truck, of any model year, which is certified to Tier 2 FTP exhaust standards for purposes of generating or banking early NO_X credits for averaging under Tier 2 requirements, or utilizing alternate phase-in schedules as allowed in this subpart.

Tier 2 standards means those FTP exhaust emission standards *including the 0.07 g/mi full useful life fleet average NO_X standard*, applicable to new light-duty vehicles and light light-duty trucks that begin a phase-in in the 2004 model year, and those exhaust emission standards *including the 0.07 g/mi full useful life fleet average NO_X standard*, applicable to heavy light-duty trucks and medium-duty passenger vehicles that begin a phase-in in the 2008 model year. These standards are found in § 86.1811–04 of this subpart.

Tier 2 vehicle means any vehicle certified to comply with the Tier 2 FTP exhaust standards contained in

§ 86.1811–04 including the 0.07 g/mi fleet average NO_X standard.

Tier 3 means relating to the Tier 3 emission standards described in §§ 86.1811–17, 86.1813–17, and 86.1816–18.

Total hydrocarbon equivalent means the sum of the carbon mass emissions of non-oxygenated hydrocarbons, methanol, formaldehyde or other organic compounds that are separately measured, expressed as gasoline-fueled vehicle hydrocarbons. In the case of exhaust emissions, the hydrogen-to-carbon ratio of the equivalent hydrocarbon is 1.85:1. In the case of diurnal and hot soak emissions, the hydrogen-to-carbon ratios of the equivalent hydrocarbons are 2.33:1 and 2.2:1, respectively.

Track width is the lateral distance between the centerlines of the base tires at ground, including the camber angle.

Trading means the exchange of complete heavy-duty vehicle NO_X emission credits between manufacturers.

Transmission class has the meaning given in 40 CFR 600.002 for LDV, LDT, and MDPV.

Transmission configuration has the meaning given in 40 CFR 600.002.

Transmission type means the basic type of the transmission (*e.g.*, automatic, manual, automated manual, semi-automatic, or continuously variable) and does not include the drive system of the vehicle (*e.g.*, front-wheel drive, rear-wheel drive, or four-wheel drive).

U.S. heavy-duty vehicle sales means sales of heavy-duty vehicles subject to the standards of this subpart, where the sale takes place in any state of the United States except for California (or a state that has adopted California motor vehicle standards for that model year pursuant to section 177 of the Clean Air Act).

U.S. sales means, unless otherwise specified, sales in any state or territory of the United States except for California or the section 177 states. Sale location is based on the point of first sale to a dealer, distributor, fleet operator, broker, or other entity.

Unproven emission control systems are emission control components or systems (and fuel metering systems) that do not qualify as proven emission control systems.

Unscheduled maintenance means any adjustment, repair, removal disassembly, cleaning, or replacement of vehicle components or systems which is performed to correct a part failure or vehicle (if the engine were installed in a vehicle) malfunction which was not anticipated.

US06 means the test cycle, described in § 86.159–00 and listed in appendix I, paragraph (g), of this part, which is designed to evaluate emissions during aggressive and microtransient driving.

Useful life means the period of use or time during which an emission standard applies to light-duty vehicles and light-duty trucks, as described in § 86.1805–01.

Van means a light-duty truck or complete heavy-duty vehicle having an integral enclosure, fully enclosing the driver compartment and load carrying device, and having no body sections protruding more than 30 inches ahead of the leading edge of the windshield.

Vehicle configuration means a unique combination of basic engine, engine code, inertia weight class, transmission configuration, and axle ratio.

Volatile liquid fuel means any fuel other than diesel or biodiesel that is a liquid at atmospheric pressure and has a Reid Vapor Pressure higher than 2.0 pounds per square inch.

We (us, our) means the Administrator of the Environmental Protection Agency and any authorized representatives.

Wheelbase is the longitudinal distance between front and rear wheel centerlines.

Zero (0) miles means that point after initial engine starting (not to exceed 100 miles of vehicle operation, or three hours of engine operation) at which normal assembly line operations and adjustments are completed, and including emission testing, if performed.

[64 FR 23925, May 4, 1999, as amended at 65 FR 6851, Feb. 10, 2000; 65 FR 59964, Oct. 6, 2000; 66 FR 5189, Jan. 18, 2001; 71 FR 2829, Jan. 17, 2006; 72 FR 8561, Feb. 26, 2007; 75 FR 25683, May 7, 2010; 77 FR 34146, June 8, 2012; 77 FR 63155, Oct. 15, 2012; 79 FR 23707, Apr. 28, 2014; 79 FR 46372, Aug. 8, 2014; 80 FR 9104, Feb. 19, 2015; 81 FR 73983, Oct. 25, 2016]

§ 86.1804–01 Acronyms and abbreviations.

The following abbreviations apply to this subpart:

A/C—Air conditioning.
AECD—Auxiliary emission control device.
A/F—Air/Fuel
ALVW—Adjusted Loaded Vehicle Weight.
API—American Petroleum Institute.
ASTM—American Society for Testing and Materials.
BAT—Bench-Aging Time
C—Celsius.
cfm—Cubic feet per minute.
CFV—Critical flow venturi.
CFV-CVS—Critical flow venturi—constant volume sampler.
CH3OH—Methanol.
CID—Cubic inch displacement.
Cl—Chemiluminescence.
CO—Carbon monoxide.
CO2—Carbon dioxide.
conc.—Concentration.
CST—Certification Short Test.
cu. in.—Cubic inch(es).
CVS—Constant volume sampler.
DDV—Durability Data Vehicle.
deg.—Degree(s).
DNPH—2,4-dinitrophenylhydrazine.
EDV—Emission Data Vehicle.
EP—End point.
ETW—Equivalent test weight.
F—Fahrenheit.
FEL—Family Emission Limit.
FID—Flame ionization detector.
ft.—Feet.
FTP—Federal Test Procedure.
g—gram(s).
gal.—U.S. gallon(s).
GC—Gas chromatograph.
GVW—Gross vehicle weight.
GVWR—Gross vehicle weight rating.
H2O—Water.
HC—Hydrocarbon(s).
HCHO—Formaldehyde.
HDV—Heavy-duty vehicle.
HEV—Hybrid electric vehicle.
HFID—Heated flame ionization detector.
Hg—Mercury.
HLDT—Heavy light-duty truck. Includes only those trucks over 6000 pounds GVWR (LDT3s and LDT4s).
HLDT/MDPV—Heavy light-duty trucks and medium-duty passenger vehicles.
hp—Horsepower.
HPLC—High-pressure liquid chromatography.
IBP—Initial boiling point.
in.—Inch(es).
IUVP—In-Use Verification Program.
K—Kelvin.
kg—Kilogram(s).
km—Kilometer(s).
kPa—Kilopascal(s).
lb.—Pound(s).
LDT1—Light-duty truck 1.
LDT2—Light-duty truck 2.
LDT3—Light-duty truck 3.
LDT4—Light-duty truck 4.
LDV/LLDT—Light-duty vehicles and light light-duty trucks. Includes only those trucks rated at 6000 pounds GVWR or less (LDT1s and LDT2s).
LDV/T—Light-duty vehicles and light-duty trucks. This term is used collectively to include, or to show that a provision applies to, all light-duty vehicles and all categories of light-duty trucks, i.e.
LDT1, LDT2, LDT3 and LDT4.
LEV—Low Emission Vehicle.
LPG—Liquefied Petroleum Gas.
m—Meter(s).
max.—Maximum.
MDPV—Medium-duty passenger vehicle.
mg—Milligram(s).
mi.—Mile(s).
min.—Minimum.
ml—Milliliter(s).
mm—Millimeter(s).
mph—Miles per hour.
mV—Millivolt
N2—Nitrogen.
NDIR—Nondispersive infrared.
NLEV—Refers to the National Low Emission Vehicle Program. Regulations governing this program are found at subpart R of this part.
NMHC—Nonmethane Hydrocarbons.
NMHCE—Non-Methane Hydrocarbon Equivalent.
NMOG—Non-methane organic gases.
NO—nitric oxide.
No.—Number.
O2—Oxygen.
OEM—Original equipment manufacturer.
NO2—Nitrogen dioxide.
NO_x—Oxides of nitrogen.
Pb—Lead.
pct.—Percent.
PDP-CVS—Positive displacement pump—constant volume sampler.
ppm—Parts per million by volume.
PM—Particulate Matter.
ppm C—Parts per million, carbon.
psi—Pounds per square inch.
R—Rankin.
RAF—Reactivity adjustment factor.
rpm—Revolutions per minute.
RVP—Reid vapor pressure.
s—Second(s).
SAE—Society of Automotive Engineers.
SBC—Standard Bench Cycle
SFTP—Supplemental Federal Test Procedure.
SI—International system of units.
SRC—Standard Road Cycle
SULEV—Super Ultra Low Emission Vehicle.
TD—dispensed fuel temperature.
THC—Total Hydrocarbons.
THCE—Total Hydrocarbon Equivalent.
TLEV—Transitional Low Emission Vehicle.
UDDS—Urban dynamometer driving schedule.
ULEV—Ultra Low Emission Vehicle.
UV—Ultraviolet.
vs—Versus.
W—Watt(s).
WOT—Wide open throttle.

Wt.—Weight.
ZEV—Zero Emission Vehicle.

[64 FR 23925, May 4, 1999, as amended at 65 FR 6852, Feb. 10, 2000; 65 FR 59965, Oct. 6, 2000; 71 FR 2829, Jan. 17, 2006]

§ 86.1805–04 Useful life.

(a) Except as required under paragraph (b) of this section or permitted under paragraphs (d), (e) and (f) of this section, the full useful life for all LDVs, LDT1s and LDT2s is a period of use of 10 years or 120,000 miles, whichever occurs first. For all HLDTs, MDPVs, and complete heavy-duty vehicles full useful life is a period of 11 years or 120,000 miles, whichever occurs first. This full useful life applies to all exhaust, evaporative and refueling emission requirements except for standards which are specified to only be applicable at the time of certification.

(b) Manufacturers may elect to optionally certify a test group to the Tier 2 exhaust emission standards for 150,000 miles to gain additional NO_X credits, as permitted in § 86.1860–04(g), or to opt out of intermediate life standards as permitted in § 86.1811–04(c). In such cases, useful life is a period of use of 15 years or 150,000 miles, whichever occurs first, for all exhaust, evaporative and refueling emission requirements except for cold CO standards and standards which are applicable only at the time of certification.

(c) Where intermediate useful life exhaust emission standards are applicable, such standards are applicable for five years or 50,000 miles, whichever occurs first.

(d) Where cold CO standards are applicable, the useful life requirement for compliance with the cold CO standard only, is 5 years or 50,000 miles, whichever occurs first.

(e) Where LDVs, LDT1s and LDT2s of the 2003 or earlier model years are certified to Tier 2 exhaust emission standards for purposes of generating early Tier 2 NO_X credits, manufacturers may certify those vehicles to full useful lives of 100,000 miles in lieu of the otherwise required 120,000 mile full useful lives, as provided under § 86.1861–04(c)(4).

(f) For interim non-Tier 2 LDV/LLDTs, the useful life requirement for exhaust, evaporative and refueling emissions is 10 years or 100,000 miles, whichever occurs first.

(g) Where cold temperature NMHC standards are applicable, the useful life requirement for compliance with the cold temperature NMHC standard only is as follows:

(1) For LDV/LLDTs, 10 years or 120,000 miles, whichever occurs first.

(2) For HLDT/MDPVs, 11 years or 120,000 miles, whichever occurs first.

[65 FR 6852, Feb. 10, 2000, as amended at 65 FR 59965, Oct. 6, 2000; 72 FR 8561, Feb. 26, 2007]

§ 86.1805–12 Useful life.

(a) Except as permitted under paragraph (b) of this section or required under paragraphs (c) and (d) of this section, the full useful life for all LDVs and LLDTs is a period of use of 10 years or 120,000 miles, whichever occurs first. The full useful life for all HLDTs, MDPVs, and complete heavy-duty vehicles is a period of 11 years or 120,000 miles, whichever occurs first. These full useful life values apply to all exhaust, evaporative and refueling emission requirements except for standards which are specified to only be applicable at the time of certification. These full useful life requirements also apply to all air conditioning leakage credits, air conditioning efficiency credits, and other credit programs used by the manufacturer to comply with the fleet average CO_2 emission standards in § 86.1818–12.

(b) Manufacturers may elect to optionally certify a test group to the Tier 2 exhaust emission standards for 150,000 miles to gain additional NO_X credits, as permitted in § 86.1860–04(g), or to opt out of intermediate life standards as permitted in § 86.1811–04(c). In such cases, useful life is a period of use of 15 years or 150,000 miles, whichever occurs first, for all exhaust, evaporative and refueling emission requirements except for cold CO standards and standards which are applicable only at the time of certification.

(c) Where intermediate useful life exhaust emission standards are applicable, such standards are applicable for five years or 50,000 miles, whichever occurs first.

(d) Where cold CO standards are applicable, the useful life requirement for compliance with the cold CO standard only, is 5 years or 50,000 miles, whichever occurs first.

[75 FR 25685, May 7, 2010]

§ 86.1805–17 Useful life.

(a) *General provisions.* The useful life values specified in this section apply for all exhaust, evaporative, refueling, and OBD emission requirements described in this subpart, except for standards that are specified to apply only at certification. These useful life requirements also apply to all air conditioning leakage credits, air conditioning efficiency credits, and other credit programs used by the manufacturer to comply with the fleet-average CO_2 emission standards in § 86.1818. Useful life values are specified as a given number of calendar years or miles of driving, whichever comes first.

(b) *Greenhouse gas pollutants.* The emission standards in § 86.1818 apply for a useful life of 10 years or 120,000 miles for LDV and LLDT and 11 years or 120,000 miles for HLDT and MDPV. For non-MDPV heavy-duty vehicles, the emission standards in § 86.1819 apply for a useful life of 11 years or 120,000 miles through model year 2020, and for a useful life of 15 years or 150,000 miles in model year 2021 and later. Manufacturers may certify based on the useful life as specified in paragraph (d) of this section if it is different than the useful life specified in this paragraph (b).

(c) *Cold temperature emission standards.* The cold temperature NMHC emission standards in § 86.1811 apply for a useful life of 10 years or 120,000 miles for LDV and LLDT, and 11 years or 120,000 miles for HLDT and HDV. The cold temperature CO emission standards in § 86.1811 apply for a useful life of 5 years or 50,000 miles.

(d) *Criteria pollutants.* The useful life provisions of this paragraph (d) apply for all emission standards not covered by paragraph (b) or (c) of this section. Except as specified in paragraph (f) of this section and in §§ 86.1811, 86.1813, and 86.1816, the useful life for LDT2, HLDT, MDPV, and HDV is 15 years or 150,000 miles. The useful life for LDV and LDT1 is 10 years or 120,000 miles. Manufacturers may optionally certify LDV and LDT1 to a useful life of 15 years or 150,000 miles, in which case the longer useful life would apply for all the standards and requirements covered by this paragraph (d).

(e) *Intermediate useful life.* Where exhaust emission standards are specified for an intermediate useful life, these standards apply for five years or 50,000 miles.

(f) *Interim provisions.* The useful life provisions of § 86.1805–12 apply for vehicles not yet subject to Tier 3 requirements. For example, vehicles above 6,000 pounds GVWR are not subject to the useful life provisions in this section until model year 2019 unless manufacturers voluntarily certify to the Tier 3 requirements earlier than the regulations require. Also, where the transition to Tier 3 standards involves a phase-in percentage for a given standard, vehicles not included as part of the phase-in portion of the fleet continue to be subject to the useful life provisions of § 86.1805–12 with respect to that standard. The useful life values for a set of vehicles may be different for exhaust and evaporative emission standards in 2021 and earlier model years; if vehicles have different useful life values for evaporative and exhaust emission standards, the evaporative useful life applies for the OBD requirements related to the leak standard and the exhaust useful life applies for all other OBD requirements.

[79 FR 23708, Apr. 28, 2014, as amended at 80 FR 9104, Feb. 19, 2015; 81 FR 73983, Oct. 25, 2016]

§ 86.1806–05 Onboard diagnostics.

(a) *General.* (1) Except as provided by paragraph (a)(2) of this section, all light-duty vehicles, light-duty trucks and complete heavy-duty vehicles weighing 14,000 pounds GVWR or less (including MDPVs) must be equipped with an onboard diagnostic (OBD) system capable of monitoring all emission-related powertrain systems or components during the applicable useful life of the vehicle. All systems and components required to be monitored by these regulations must be evaluated periodically, but no less frequently than once per applicable certification test cycle as defined in paragraphs (a) and (d) of Appendix I of this part, or

similar trip as approved by the Administrator. Emissions of CO_2, CH_4, and N_2O are not required to be monitored by the OBD system.

(2) Diesel fueled MDPVs and heavy-duty vehicles weighing 14,000 pounds GVWR or less that are not MDPVs must meet the OBD requirements of this section according to the phase-in schedule in paragraph (l) of this section. Paragraph (l) of this section does not apply to Otto-cycle MDPVs.

(3) An OBD system demonstrated to fully meet the requirements in, through model year 2006, § 86.004–17 and, for model years 2007 and later, § 86.007–17 may be used to meet the requirements of this section, provided that such an OBD system also incorporates appropriate transmission diagnostics as may be required under this section, and provided that the Administrator finds that a manufacturer's decision to use the flexibility in this paragraph (a)(3) is based on good engineering judgement.

(b) *Malfunction descriptions.* The OBD system must detect and identify malfunctions in all monitored emission-related powertrain systems or components according to the following malfunction definitions as measured and calculated in accordance with test procedures set forth in subpart B of this part (chassis-based test procedures), excluding those test procedures defined as ''Supplemental'' test procedures in § 86.004–2 and codified in §§ 86.158, 86.159, and 86.160. For clean alternative fuel conversion manufacturers, your OBD system is expected to detect and identify malfunctions in all monitored emission-related powertrain systems or components according to the malfunction definitions described in this paragraph (b) as measured and calculated in accordance with the chassis-based test procedures set forth in subpart B of this part to the extent feasible, excluding the elements of the Supplemental FTP (see § 86.1803). However, at a minimum, systems must detect and identify malfunctions as described in paragraph (k)(7) of this section.

(1) *Catalysts and particulate traps*—(i) *Otto-cycle.* Catalyst deterioration or malfunction before it results in an increase in NMHC emissions 1.5 times the NMHC standard or FEL, as compared to the NMHC emission level measured using a representative 4000 mile catalyst system.

(ii) *Diesel.* (A) If equipped, catalyst deterioration or malfunction before it results in exhaust emissions exceeding 1.5 times the applicable standard or FEL for NO_X or PM. This requirement applies only to reduction catalysts; monitoring of oxidation catalysts is not required. This monitoring need not be done if the manufacturer can demonstrate that deterioration or malfunction of the system will not result in exceedance of the threshold.

(B) If equipped with a particulate trap, catastrophic failure of the device must be detected. Any particulate trap whose complete failure results in exhaust emissions exceeding 1.5 times the applicable standard or FEL for NO_X or PM must be monitored for such catastrophic failure. This monitoring need not be done if the manufacturer can demonstrate that a catastrophic failure of the system will not result in exceedance of the threshold.

(2) *Engine misfire*—(i) *Otto-cycle.* Engine misfire resulting in exhaust emissions exceeding 1.5 times the applicable standard or FEL for NMHC, CO or NO_X; and any misfire capable of damaging the catalytic converter.

(ii) *Diesel.* Lack of cylinder combustion must be detected.

(3) *Oxygen sensors.* If equipped, oxygen sensor deterioration or malfunction resulting in exhaust emissions exceeding 1.5 times the applicable standard or FEL for NMHC, CO or NO_X.

(4) *Evaporative leaks.* If equipped, any vapor leak in the evaporative and/or refueling system (excluding the tubing and connections between the purge valve and the intake manifold) greater than or equal in magnitude to a leak caused by a 0.040 inch diameter orifice; an absence of evaporative purge air flow from the complete evaporative emission control system. On vehicles with fuel tank capacity greater than 25 gallons, the Administrator may, following a request from the manufacturer, revise the size of the orifice to the smallest orifice feasible, based on test data, if the most reliable monitoring method available cannot reliably detect a system leak equal to a 0.040 inch diameter orifice.

(5) *Other emission control systems.* Any deterioration or malfunction occurring in a powertrain system or component directly intended to control emissions, including but not necessarily limited to, the exhaust gas recirculation (EGR) system, if equipped, the secondary air system, if equipped, and the fuel control system, singularly resulting in exhaust emissions exceeding 1.5 times the applicable emission standard or FEL for NMHC, CO, NO_X, or diesel PM. For vehicles equipped with a secondary air system, a functional check, as described in paragraph (b)(6) of this section, may satisfy the requirements of this paragraph provided the manufacturer can demonstrate that deterioration of the flow distribution system is unlikely. This demonstration is subject to Administrator approval and, if the demonstration and associated functional check are approved, the diagnostic system must indicate a malfunction when some degree of secondary airflow is not detectable in the exhaust system during the check. For vehicles equipped with positive crankcase ventilation (PCV), monitoring of the PCV system is not necessary provided the manufacturer can demonstrate to the Administrator's satisfaction that the PCV system is unlikely to fail.

(6) *Other emission-related powertrain components.* Any other deterioration or malfunction occurring in an electronic emission-related powertrain system or component not otherwise described in paragraphs (b)(1) through (b)(5) of this section that either provides input to or receives commands from the on-board computer and has a measurable impact on emissions; monitoring of components required by this paragraph (b)(6) must be satisfied by employing electrical circuit continuity checks and rationality checks for computer input components (input values within manufacturer specified ranges based on other available operating parameters), and functionality checks for computer output components (proper functional response to computer commands) except that the Administrator may waive such a rationality or functionality check where the manufacturer has demonstrated infeasibility. Malfunctions are defined as a failure of the system or component to meet the electrical circuit continuity checks or the rationality or functionality checks.

(7) *Performance of OBD functions.* Oxygen sensor or any other component deterioration or malfunction which renders that sensor or component incapable of performing its function as part of the OBD system must be detected and identified on vehicles so equipped.

(8) *Hybrid electric vehicles.* For Tier 2 and interim non-Tier 2 hybrid electric vehicles (HEVs) only. Unless added to HEVs in compliance with other requirements of this section, or unless otherwise approved by the Administrator:

(i) The manufacturer must equip each HEV with a maintenance indicator consisting of a light that must activate automatically by illuminating the first time the minimum performance level is observed for each battery system component. Possible battery system components requiring monitoring are: battery water level, temperature control, pressure control, and other parameters critical for determining battery condition.

(ii) [Reserved]

(iii) The manufacturer must equip each HEV with a separate odometer or other device subject to the approval of the Administrator that can accurately measure the mileage accumulation on the engines used in these vehicles.

(c) *Malfunction indicator light (MIL).* The OBD system must incorporate a malfunction indicator light (MIL) readily visible to the vehicle operator. When illuminated, the MIL must display ''Check Engine,'' ''Service Engine Soon,'' a universally recognizable engine symbol, or a similar phrase or symbol approved by the Administrator. A vehicle should not be equipped with more than one general purpose malfunction indicator light for emission-related problems; separate specific purpose warning lights (e.g. brake system, fasten seat belt, oil pressure, etc.) are permitted. The use of red for the OBD-related malfunction indicator light is prohibited.

(d) *MIL illumination.* (1) The MIL must illuminate and remain illuminated when any of the conditions specified in paragraph (b) of this section are detected and verified, or whenever the

engine control enters a default or secondary mode of operation considered abnormal for the given engine operating conditions. The MIL must blink once per second under any period of operation during which engine misfire is occurring and catalyst damage is imminent. If such misfire is detected again during the following driving cycle (i.e., operation consisting of, at a minimum, engine start-up and engine shut-off) or the next driving cycle in which similar conditions are encountered, the MIL must maintain a steady illumination when the misfire is not occurring and then remain illuminated until the MIL extinguishing criteria of this section are satisfied. The MIL must also illuminate when the vehicle's ignition is in the ''key-on'' position before engine starting or cranking and extinguish after engine starting if no malfunction has previously been detected. If a fuel system or engine misfire malfunction has previously been detected, the MIL may be extinguished if the malfunction does not reoccur during three subsequent sequential trips during which similar conditions are encountered and no new malfunctions have been detected. Similar conditions are defined as engine speed within 375 rpm, engine load within 20 percent, and engine warm-up status equivalent to that under which the malfunction was first detected. If any malfunction other than a fuel system or engine misfire malfunction has been detected, the MIL may be extinguished if the malfunction does not reoccur during three subsequent sequential trips during which the monitoring system responsible for illuminating the MIL functions without detecting the malfunction, and no new malfunctions have been detected. Upon Administrator approval, statistical MIL illumination protocols may be employed, provided they result in comparable timeliness in detecting a malfunction and evaluating system performance, i.e., three to six driving cycles would be considered acceptable.

(2)(i) For interim non-Tier 2 and Tier 2 LDV/LLDTs and HLDT/MDPVs produced through the 2007 model year, upon a manufacturer's written request, EPA will consider allowing the use of an on-board diagnostic system during the certification process that functions properly on low-sulfur gasoline but indicates sulfur-induced passes when exposed to high sulfur gasoline. After the 2007 model year, this provision can be used only for interim non-Tier 2 and Tier 2 LDV/LLDTs and HLDT/MDPVs introduced into commerce in American Samoa, Guam, and the Commonwealth of the Northern Mariana Islands, but this provision only can be used for such vehicles in any of those locations if low sulfur gasoline is determined by the Administrator to be unavailable in that specific location.

(ii) For interim non-Tier 2 and Tier 2 LDV/LLDTs and HLDT/MDPVs, if vehicles produced through the 2007 model year exhibit illuminations of the emission control diagnostic system malfunction indicator light due to high sulfur gasoline, EPA will consider, upon a manufacturer's written request, allowing modifications to such vehicles on a case-by-case basis so as to eliminate the sulfur induced illumination. After the 2007 model year, this provision can be used only for interim non-Tier 2 and Tier 2 LDV/LLDTs and HLDT/MDPVs introduced into commerce in American Samoa, Guam, and the Commonwealth of the Northern Mariana Islands, but this provision only can be used for such vehicles in any of those locations if low sulfur gasoline is determined by the Administrator to be unavailable in that specific location.

(e) *Storing of computer codes.* The OBD system shall record and store in computer memory diagnostic trouble codes and diagnostic readiness codes indicating the status of the emission control system. These codes shall be available through the standardized data link connector per specifications as referenced in paragraph (h) of this section.

(1) A diagnostic trouble code must be stored for any detected and verified malfunction causing MIL illumination. The stored diagnostic trouble code must identify the malfunctioning system or component as uniquely as possible. At the manufacturer's discretion, a diagnostic trouble code may be stored for conditions not causing MIL illumination. Regardless, a separate

code should be stored indicating the expected MIL illumination status (i.e., MIL commanded ''ON,'' MIL commanded ''OFF'').

(2) For a single misfiring cylinder, the diagnostic trouble code(s) must uniquely identify the cylinder, unless the manufacturer submits data and/or engineering evaluations which adequately demonstrate that the misfiring cylinder cannot be reliably identified under certain operating conditions. For diesel vehicles only, the specific cylinder for which combustion cannot be detected need not be identified if new hardware would be required to do so. The diagnostic trouble code must identify multiple misfiring cylinder conditions; under multiple misfire conditions, the misfiring cylinders need not be uniquely identified if a distinct multiple misfire diagnostic trouble code is stored.

(3) The diagnostic system may erase a diagnostic trouble code if the same code is not re-registered in at least 40 engine warm-up cycles, and the malfunction indicator light is not illuminated for that code.

(4) Separate status codes, or readiness codes, must be stored in computer memory to identify correctly functioning emission control systems and those emission control systems which require further vehicle operation to complete proper diagnostic evaluation. A readiness code need not be stored for those monitors that can be considered continuously operating monitors (e.g., misfire monitor, fuel system monitor, etc.). Readiness codes should never be set to ''not ready'' status upon key-on or key-off; intentional setting of readiness codes to ''not ready'' status via service procedures must apply to all such codes, rather than applying to individual codes. Subject to Administrator approval, if monitoring is disabled for a multiple number of driving cycles (i.e., more than one) due to the continued presence of extreme operating conditions (e.g., ambient temperatures below 40 °F, or altitudes above 8000 feet), readiness for the subject monitoring system may be set to ''ready'' status without monitoring having been completed. Administrator approval shall be based on the conditions for monitoring system disablement, and the number of driving cycles specified without completion of monitoring before readiness is indicated.

(f) *Available diagnostic data.* (1) Upon determination of the first malfunction of any component or system, ''freeze frame'' engine conditions present at the time must be stored in computer memory. Should a subsequent fuel system or misfire malfunction occur, any previously stored freeze frame conditions must be replaced by the fuel system or misfire conditions (whichever occurs first). Stored engine conditions must include, but are not limited to: engine speed, open or closed loop operation, fuel system commands, coolant temperature, calculated load value, fuel pressure, vehicle speed, air flow rate, and intake manifold pressure if the information needed to determine these conditions is available to the computer. For freeze frame storage, the manufacturer must include the most appropriate set of conditions to facilitate effective repairs. If the diagnostic trouble code causing the conditions to be stored is erased in accordance with paragraph (d) of this section, the stored engine conditions may also be erased.

(2) The following data in addition to the required freeze frame information must be made available on demand through the serial port on the standardized data link connector, if the information is available to the on-board computer or can be determined using information available to the on-board computer: Diagnostic trouble codes, engine coolant temperature, fuel control system status (closed loop, open loop, other), fuel trim, ignition timing advance, intake air temperature, manifold air pressure, air flow rate, engine RPM, throttle position sensor output value, secondary air status (upstream, downstream, or atmosphere), calculated load value, vehicle speed, and fuel pressure. The signals must be provided in standard units based on SAE specifications incorporated by reference in paragraph (h) of this section. Actual signals must be clearly identified separately from default value or limp home signals.

(3) For all OBD systems for which specific on-board evaluation tests are conducted (catalyst, oxygen sensor,

etc.), the results of the most recent test performed by the vehicle, and the limits to which the system is compared must be available through the standardized data link connector per the appropriate standardized specifications as referenced in paragraph (h) of this section.

(4) Access to the data required to be made available under this section shall be unrestricted and shall not require any access codes or devices that are only available from the manufacturer.

(g) *Exceptions.* The OBD system is not required to evaluate systems or components during malfunction conditions if such evaluation would result in a risk to safety or failure of systems or components. Additionally, the OBD system is not required to evaluate systems or components during operation of a power take-off unit such as a dump bed, snow plow blade, or aerial bucket, etc.

(h) *Incorporation by reference.* The following additional requirements apply based on industry standard specifications, which are incorporated by reference in § 86.1:

(1) The following requirements apply for standardized on-board to off-board communications:

(i) Starting in model year 2008, light-duty vehicles and light-duty trucks must comply with ISO 15765–4:2005(E), ''Road Vehicles-Diagnostics on Controller Area Network (CAN)—Part 4: Requirements for emission-related systems'', January 15, 2005.

(ii) Starting in model year 2008, heavy-duty vehicles must comply with the protocol described in paragraph (h)(1)(i) of this section, or the following set of SAE standards: SAE J1939–11, Revised October 1999; SAE J1939–13, July 1999; SAE J1939–21, Revised April 2001; SAE J1939–31, Revised December 1997; SAE J1939–71, Revised January 2008; SAE J1939–73, Revised September 2006; SAE J1939–81, May 2003.

(iii) Note that for model years 1996 through 2007 manufacturers could instead comply with the protocols specified in SAE J1850, ISO 9141–2, or ISO 14230–4.

(2) Light-duty vehicles and light-duty trucks must meet the following additional specifications:

(i) Basic diagnostic data (as specified in §§ 86.094–17(e) and (f)) shall be provided in the format and units in SAE J1979 ''E/E Diagnostic Test Modes—Equivalent to ISO/DIS 15031–5: Revised, May 2007.

(ii) Diagnostic trouble codes shall be consistent with SAE J2012 ''Diagnostic Trouble Code Definitions—Equivalent to ISO/DIS 15031–6: April 30, 2002'', (Revised, April 2002).

(iii) The connection interface between the OBD system and test equipment and diagnostic tools shall meet the functional requirements of SAE J1962 ''Diagnostic Connector—Equivalent to ISO/DIS 15031–3: December 14, 2001'' (Revised, April 2002).

(iv) SAE J1930, Revised April 2002. All acronyms, definitions and abbreviations shall be formatted according to this industry standard. Alternatively, manufacturers may use SAE J2403, Revised August 2007.

(v) All equipment used to interface, extract, and display OBD-related information shall meet SAE J1978 ''OBD II Scan Tool'' Equivalent to ISO 15031–4: December 14, 2001'', (Revised, April 2002).

(i) *Deficiencies and alternative fueled vehicles.* Upon application by the manufacturer, the Administrator may accept an OBD system as compliant even though specific requirements are not fully met. Such compliances without meeting specific requirements, or deficiencies, will be granted only if compliance would be infeasible or unreasonable considering such factors as, but not limited to: Technical feasibility of the given monitor and lead time and production cycles including phase-in or phase-out of vehicle designs and programmed upgrades of computers. Unmet requirements should not be carried over from the previous model year except where unreasonable hardware or software modifications would be necessary to correct the deficiency, and the manufacturer has demonstrated an acceptable level of effort toward compliance as determined by the Administrator. Furthermore, EPA will not accept any deficiency requests that include the complete lack of a major diagnostic monitor (''major'' diagnostic monitors being those for exhaust aftertreatment devices, oxygen sensor,

air-fuel ratio sensor, NO_X sensor, engine misfire, evaporative leaks, and diesel EGR, if equipped), with the possible exception of the special provisions for alternative fueled engines. For alternative fueled vehicles (e.g., natural gas, liquefied petroleum gas, methanol, ethanol), manufacturers may request the Administrator to waive specific monitoring requirements of this section for which monitoring may not be reliable with respect to the use of the alternative fuel. At a minimum, alternative fuel engines must be equipped with an OBD system meeting OBD requirements to the extent feasible as approved by the Administrator.

(j) *California OBDII compliance option.* Manufacturers may comply with California's OBD requirements instead of meeting the requirements of this section as follows:

(1) Through the 2006 model year, demonstration of compliance with California OBDII requirements (Title 13 California Code of Regulations § 1968.2 (13 CCR 1968.2)), as modified, approved and filed on April 21, 2003 (incorporated by reference, see § 86.1), shall satisfy the requirements of this section, except that compliance with 13 CCR 1968.2(e)(4.2.2)(C), pertaining to 0.02 inch evaporative leak detection, and 13 CCR 1968.2(d)(1.4), pertaining to tampering protection, are not required to satisfy the requirements of this section. Also, the deficiency provisions of 13 CCR 1968.2(i) do not apply. In addition, demonstration of compliance with 13 CCR 1968.2(e)(16.2.1)(C), to the extent it applies to the verification of proper alignment between the camshaft and crankshaft, applies only to vehicles equipped with variable valve timing.

(2) For 2007 through 2012 model year vehicles, demonstration of compliance with California OBD II requirements (Title 13 California Code of Regulations § 1968.2 (13 CCR 1968.2)), approved on November 9, 2007 (incorporated by reference, see § 86.1), shall satisfy the requirements of this section, except that compliance with 13 CCR 1968.2(e)(4.2.2)(C), pertaining to 0.02 inch evaporative leak detection, and 13 CCR 1968.2(d)(1.4), pertaining to tampering protection, are not required to satisfy the requirements of this section. Also, the deficiency provisions of 13 CCR 1968.2(k) do not apply. In addition, demonstration of compliance with 13 CCR 1968.2(e)(15.2.1)(C), to the extent it applies to the verification of proper alignment between the camshaft and crankshaft, applies only to vehicles equipped with variable valve timing.

(3) Beginning with the 2013 model year, manufacturers may demonstrate compliance with California's 2013 OBD requirements as described in § 86.1806–17(a).

(4) For all model years, the deficiency provisions of paragraph (i) of this section and the evaporative leak detection requirement of paragraph (b)(4) of this section, if applicable, apply to manufacturers selecting this paragraph for demonstrating compliance.

(k) *Certification.* For test groups required to have an OBD system, certification will not be granted if, for any test vehicle approved by the Administrator in consultation with the manufacturer, the malfunction indicator light does not illuminate under any of the following circumstances, unless the manufacturer can demonstrate that any identified OBD problems discovered during the Administrator's evaluation will be corrected on production vehicles.

(1)(i) *Otto-cycle.* A catalyst is replaced with a deteriorated or defective catalyst, or an electronic simulation of such, resulting in an increase of 1.5 times the NMHC standard or FEL above the NMHC emission level measured using a representative 4000 mile catalyst system.

(ii) *Diesel.* (A) If monitored for emissions performance—a catalyst is replaced with a deteriorated or defective catalyst, or an electronic simulation of such, resulting in exhaust emissions exceeding 1.5 times the applicable standard or FEL for NO_X or PM.

(B) If monitored for performance—a particulate trap is replaced with a trap that has catastrophically failed, or an electronic simulation of such.

(2)(i) *Otto-cycle.* An engine misfire condition is induced resulting in exhaust emissions exceeding 1.5 times the applicable standards or FEL for NMHC, CO or NO_X.

(ii) *Diesel.* An engine misfire condition is induced and is not detected.

(3) If so equipped, any oxygen sensor is replaced with a deteriorated or defective oxygen sensor, or an electronic simulation of such, resulting in exhaust emissions exceeding 1.5 times the applicable standard or FEL for NMHC, CO or NO_X.

(4) If so equipped, a vapor leak is introduced in the evaporative and/or refueling system (excluding the tubing and connections between the purge valve and the intake manifold) greater than or equal in magnitude to a leak caused by a 0.040 inch diameter orifice, or the evaporative purge air flow is blocked or otherwise eliminated from the complete evaporative emission control system.

(5) A malfunction condition is induced in any emission-related powertrain system or component, including but not necessarily limited to, the exhaust gas recirculation (EGR) system, if equipped, the secondary air system, if equipped, and the fuel control system, singularly resulting in exhaust emissions exceeding 1.5 times the applicable emission standard or FEL for NMHC, CO, NO_X or PM.

(6) A malfunction condition is induced in an electronic emission-related powertrain system or component not otherwise described in this paragraph (k) that either provides input to or receives commands from the on-board computer resulting in a measurable impact on emissions.

(7) For clean alternative fuel conversion manufacturers (e.g., natural gas, liquefied petroleum gas, methanol, ethanol), in lieu of the requirements specified for other manufacturers in this paragraph (k), you may demonstrate that the malfunction indicator light will illuminate, at a minimum, under any of the following circumstances when the vehicle is operated on the applicable alternative fuel:

(i) *Otto-cycle.* A catalyst is replaced with a defective catalyst system where the catalyst brick for the monitored volume has been removed (i.e., empty catalyst system) resulting in an increase of 1.5 times the NMOG (or NMOG + NO_X) standard or FEL above the NMOG (or NMOG + NO_X) emission level measured using a representative 4000 mile catalyst system.

(ii) *Diesel.* (A) If monitored for emissions performance—a catalyst is replaced with a defective catalyst system where the catalyst brick for the monitored volume has been removed (i.e., empty catalyst can) resulting in exhaust emissions exceeding 1.5 times the applicable standard or FEL for NO_X (or NMOG + NO_X) or PM.

(B) If monitored for performance—a particulate trap is replaced with a trap that has catastrophically failed.

(iii) *Misfire.* (A) *Otto-cycle.* An engine misfire condition is induced that completely disables one or more cylinders, either through mechanical or electrical means, resulting in exhaust emissions exceeding 1.5 times the applicable standards or FEL for CO, NMOG, or NO_X (or NMOG + NO_X).

(B) *Diesel.* An engine misfire condition resulting in complete lack of cylinder firing is induced and is not detected.

(iv) If so equipped, any oxygen sensor is replaced with a completely defective oxygen sensor, or an electronic simulation of such, resulting in exhaust emissions exceeding 1.5 times the applicable standard or FEL for CO, NMOG, or NO_X (or NMOG + NO_X).

(v) If so equipped and applicable, a vapor leak is introduced in the evaporative and/or refueling system (excluding the tubing and connections between the purge valve and the intake manifold) greater than or equal in magnitude to a leak caused by a 0.040 inch diameter orifice, or the evaporative purge air flow is blocked or otherwise eliminated from the complete evaporative emission control system. At a minimum, gas cap removal or complete venting of the evaporative and/or refueling system may be introduced resulting in a gross leak of the complete evaporative emission control system.

(vi) A malfunction condition is induced resulting in complete disablement in any emission-related powertrain system or component, including but not necessarily limited to, the exhaust gas recirculation (EGR) system, if equipped, the secondary air

system, if equipped, and the fuel control system, singularly resulting in exhaust emissions exceeding 1.5 times the applicable emission standard or FEL for PM, CO, NMOG, or NO_X (or NMOG + NO_X).

(vii) A malfunction condition is induced that completely disables an electronic emission-related powertrain system or component not otherwise described in this paragraph (k) that either provides input to or receives commands from the onboard computer resulting in a measurable impact on emissions. At a minimum, manufacturers may be required to perform this disablement on critical inputs and outputs where lack of the input and output disables an entire monitor as described in this paragraph (k)(7)(vii), disables multiple monitors (e.g., two or more) used by the onboard computer, or renders the entire onboard computer and its functions inoperative.

(viii) Clean alternative fuel conversion manufacturers must use good engineering judgment to induce malfunctions and may perform more stringent malfunction demonstrations than described in this paragraph (k)(7). In addition, the Administrator reserves the right to request a clean alternative fuel conversion manufacturer to perform stricter demonstration requirements, to the extent feasible, on clean alternative fuel conversions.

(l) *Phase-in for complete heavy-duty vehicles.* Complete heavy-duty vehicles weighing 14,000 pounds GVWR or less that are not Otto-cycle MDPVs must meet the OBD requirements of this section according to the following phase-in schedule, based on the percentage of projected vehicle sales. The 2004 model year requirements in the following phase-in schedule are applicable only to heavy-duty Otto-cycle vehicles where the manufacturer has selected Otto-cycle Option 1 or 2 for alternative 2003 or 2004 compliance according to § 86.004–01(c)(1) or (2). The 2005 through 2007 requirements in the following phase-in schedule apply to all heavy-duty vehicles weighing 14,000 pounds GVWR or less, excluding MDPVs. If the manufacturer has selected Otto-cycle Option 3 it may exempt 2005 model year complete heavy-duty engines and vehicles whose model year commences before July 31, 2004 from the requirements of this section. For the purposes of calculating compliance with the phase-in provisions of this paragraph (l), heavy-duty vehicles subject to the phase-in requirements of this section may be combined with heavy-duty vehicles subject to the phase-in requirements of paragraph § 86.005–17 (k). The phase-in schedule follows:

OBD Compliance Phase-in for Complete Heavy-Duty Vehicles Weighing 14,000 Pounds GVWR or Less

Model year	Phase-in based on projected sales
2004 MY	Applicable only to Otto-cycle engines complying with Options 1 or 2; 40% compliance; alternative fuel waivers available.
2005 MY	60% compliance; alternative fuel waivers available.
2006 MY	80% compliance; alternative fuel waivers available.
2007 MY	80% compliance; alternative fuel waivers available.
2008 + MY	100% compliance.

(m) *Thresholds for California OBD II Compliance Option.* For the purposes of complying with the provisions set forth above in paragraph (j), vehicles certified to Tier 2 standards shall utilize multiplicative factors from the California vehicle type (i.e. LEV II, ULEV II) corresponding to the Tier 2 to which the vehicles are certified. Vehicles certified to Tier 2, Bin 4 emissions standards shall utilize the Tier 2 Bin 4 emission standards and the CARB ULEV II multiplicative factors to determine the appropriate OBD malfunction threshold for all pollutants except NO_X, for which they shall utilize that CARB SULEV II multiplicative factors. Vehicles certified to Tier 2, Bin 3 emissions standards shall utilize the Tier 2 Bin 3 emission standards and the CARB ULEV II multiplicative factors to determine the appropriate OBD malfunction threshold for all pollutants except NO_X, for which they shall utilize that CARB SULEV II multiplicative factors. Vehicles certified to Tier 2, Bin 2 emissions standards shall utilize the Tier 2 Bin 2 emission standards and the CARB SULEV II multiplicative factors to determine the appropriate OBD malfunction threshold. Vehicles certified to Tier 2 Bin 7 or higher shall utilize the CARB LEV II multiplicative factors to

determine the appropriate OBD malfunction threshold.

(n) For 2007 and later model year diesel complete heavy-duty vehicles, in lieu of the malfunction descriptions of paragraph (b) of this section, the malfunction descriptions of this paragraph (n) shall apply. The OBD system must detect and identify malfunctions in all monitored emission-related powertrain systems or components according to the following malfunction definitions as measured and calculated in accordance with test procedures set forth in subpart B of this part (chassis-based test procedures), excluding those test procedures defined as ''Supplemental'' test procedures in § 86.004–2 and codified in §§ 86.158, 86.159, and 86.160.

(1) *Catalysts and diesel particulate filters (DPF).* (i) If equipped, reduction catalyst deterioration or malfunction before it results in exhaust emissions exceeding, for model years 2007 through 2009, 4 times the applicable NO_X standard and, for model years 2010 through 2012, the applicable NO_X standard + 0.6 g/mi and, for model years 2013 and later, the applicable NO_X standard + 0.3 g/mi. Further, if equipped, oxidation catalyst (not to include the DPF), deterioration or malfunction before it results in exhaust NMHC emissions exceeding, for 2010 through 2012 model years, 2.5 times the applicable NMHC standard and, for 2013 and later model years, 2 times the applicable NMHC standard. Monitoring of oxidation catalysts is not required through the 2009 model year. These catalyst monitoring need not be done if the manufacturer can demonstrate that deterioration or malfunction of the system will not result in exceedance of the threshold. As an alternative to the oxidation catalyst monitoring requirement, the monitor can be designed to detect oxidation catalyst deterioration or malfunction before it results in an inability to achieve a temperature rise of 100 degrees C, or to reach the necessary DPF regeneration temperature, within 60 seconds of initiating an active DPF regeneration. Further, oxidation catalyst deterioration or malfunction when the DOC is unable to sustain the necessary regeneration temperature for the duration of the regeneration event. The OBD or control system must abort the regeneration if the regeneration temperature has not been reached within five minutes of initiating an active regeneration event, and if the regeneration temperature cannot be sustained for the duration of the regeneration event.

(ii) If equipped with a DPF, for all model years, catastrophic failure of the device must be detected. Any DPF whose complete failure results in exhaust emissions exceeding 1.5 times the applicable PM standard or family emissions limit (FEL) must be monitored for such catastrophic failure. This monitoring need not be done if the manufacturer can demonstrate that a catastrophic failure of the system will not result in exceedance of the threshold. Further, if equipped with a DPF, the OBD system shall detect DPF deterioration or malfunction before it results in exhaust emissions exceeding, for 2010 through 2012 model years, 4 times the applicable PM standard and, for 2013 and later model years, the applicable PM standard + 0.04 g/mi.

(2) *Engine misfire.* Lack of cylinder combustion must be detected.

(3) *Exhaust gas sensors*—(i) *Oxygen sensors and air-fuel ratio sensors downstream of aftertreatment devices.* If equipped, sensor deterioration or malfunction resulting in exhaust emissions exceeding any of the following levels: for 2007 through 2009 model years, 4 times the applicable PM standard, or 3 times the applicable NO_X standard, or 2.5 times the applicable NMHC standard and, for 2010 through 2012 model years, 4 times the applicable PM standard, or the applicable NO_X standard + 0.3 g/mi, or 2.5 times the applicable NMHC standard and, for 2013 and later model years, the applicable PM standard + 0.04 g/mi, or the applicable NO_X standard + 0.3 g/mi, or 2 times the applicable NMHC standard.

(ii) *Oxygen sensors and air-fuel ratio sensors upstream of aftertreatment devices.* If equipped, sensor deterioration or malfunction resulting in exhaust emissions exceeding any of the following levels: for 2007 through 2009 model years, 4 times the applicable PM standard, or 3 times the applicable NO_X standard, or 2.5 times the applicable NMHC standard, or 2.5 times the applicable CO standard and, for 2010 through

2012 model years, the applicable PM standard + 0.02 g/mi, or the applicable NO_X standard + 0.3 g/mi, or 2.5 times the applicable NMHC standard, or 2.5 times the applicable CO standard and, for 2013 and later model years, the applicable PM standard + 0.02 g/mi, or the applicable NO_X standard + 0.3 g/mi, or 2 times the applicable NMHC standard, or 2 times the applicable CO standard.

(iii) *NO_X sensors.* If equipped, sensor deterioration or malfunction resulting in exhaust emissions exceeding any of the following levels: for 2007 through 2009 model years, 5 times the applicable PM standard, or 4 times the applicable NO_X standard and, for 2010 through 2012 model years, 4 times the applicable PM standard, or the applicable NO_X standard + 0.6 g/mi and, for 2013 and later model years, the applicable PM standard + 0.04 g/mi, or the applicable NO_X standard + 0.3 g/mi.

(4) [Reserved]

(5) *Other emission control systems and components.* Any deterioration or malfunction occurring in an engine system or component directly intended to control emissions, including but not necessarily limited to, the exhaust gas recirculation (EGR) system, if equipped, and the fuel control system, singularly resulting in exhaust emissions exceeding any of the following levels: For 2007 through 2009 model years, 4 times the applicable PM standard, or 3 times the applicable NO_X standard, or 2.5 times the applicable NMHC standard, or 2.5 times the applicable CO standard and, for 2010 through 2012 model years, 4 times the applicable PM standard, or the applicable NO_X standard + 0.3 g/mi, or 2.5 times the applicable NMHC standard, or 2.5 times the applicable CO standard and, for 2013 and later model years, the applicable PM standard + 0.02 g/mi, or the applicable NO_X standard + 0.3 g/mi, or 2 times the applicable NMHC standard, or 2 times the applicable CO standard. A functional check, as described in paragraph (n)(6) of this section, may satisfy the requirements of this paragraph (n)(5) provided the manufacturer can demonstrate that a malfunction would not cause emissions to exceed the applicable levels. This demonstration is subject to Administrator approval. For engines equipped with crankcase ventilation (CV), monitoring of the CV system is not necessary provided the manufacturer can demonstrate to the Administrator's satisfaction that the CV system is unlikely to fail.

(6) *Other emission-related powertrain components.* Any other deterioration or malfunction occurring in an electronic emission-related powertrain system or component not otherwise described in paragraphs (n)(1) through (n)(5) of this section that either provides input to or receives commands from the on-board computer and has a measurable impact on emissions; monitoring of components required by this paragraph (n)(6) must be satisfied by employing electrical circuit continuity checks and rationality checks for computer input components (input values within manufacturer specified ranges based on other available operating parameters), and functionality checks for computer output components (proper functional response to computer commands) except that the Administrator may waive such a rationality or functionality check where the manufacturer has demonstrated infeasibility. Malfunctions are defined as a failure of the system or component to meet the electrical circuit continuity checks or the rationality or functionality checks.

(7) *Performance of OBD functions.* Any sensor or other component deterioration or malfunction which renders that sensor or component incapable of performing its function as part of the OBD system must be detected and identified on engines so equipped.

(o) For 2007 and later model year diesel complete heavy-duty vehicles, in lieu of the certification provisions of paragraph (k) of this section, the certification provisions of this paragraph (o) shall apply. For test groups required to have an OBD system, certification will not be granted if, for any test vehicle approved by the Administrator in consultation with the manufacturer, the malfunction indicator light does not illuminate under any of the following circumstances, unless the manufacturer can demonstrate that any identified OBD problems discovered during the Administrator's evaluation will be corrected on production vehicles.

(1)(i) If monitored for emissions performance—a reduction catalyst is replaced with a deteriorated or defective catalyst, or an electronic simulation of such, resulting in exhaust emissions exceeding, for 2007 through 2009 model years, 4 times the applicable NO_X standard and, for 2010 through 2012 model years, the applicable NO_X standard + 0.6 g/mi and, for 2013 and later model years, the applicable NO_X standard + 0.3 g/mi. Also if monitored for emissions performance-an oxidation catalyst (not to include the DPF) is replaced with a deteriorated or defective catalyst, or an electronic simulation of such, resulting in exhaust NMHC emissions exceeding, for 2010 through 2012 model years, 2.5 times the applicable NMHC standard and, for 2013 and later model years, 2 times the applicable NMHC standard. If monitored for exotherm performance for 2010 and later model years, an oxidation catalsyt is replaced with a deteriorated or defective catalyst, or an electronic simulation of such, resulting in an inability to achieve a 100 degree C temperature rise, or the necessary regeneration temperature, within 60 seconds of initiating a DPF regeneration.

(ii) If monitored for performance—a DPF is replaced with a DPF that has catastrophically failed, or an electronic simulation of such. Further, a DPF is replaced with a deteriorated or defective DPF, or an electronic simulation of such, resulting in exhaust PM emissions exceeding, for 2010 through 2012 model years, 4 times the applicable PM standard and, for 2013 and later model years, the applicable PM standard + 0.04 g/mi.

(2) An engine misfire condition is induced and is not detected.

(3)(i) If so equipped, any oxygen sensor or air-fuel ratio sensor located downstream of aftertreatment devices is replaced with a deteriorated or defective sensor, or an electronic simulation of such, resulting in exhaust emissions exceeding any of the following levels: for 2007 through 2009 model years, 4 times the applicable PM standard, or 3 times the applicable NO_X standard, or 2.5 times the applicable NMHC standard and, for 2010 through 2012 model years, 4 times the applicable PM standard, or the applicable NO_X standard + 0.3 g/mi, or 2.5 times the applicable NMHC standard and, for 2013 and later model years, the applicable PM standard + 0.04 g/mi, or the applicable NO_X standard + 0.3 g/mi, or 2 times the applicable NMHC standard.

(ii) If so equipped, any oxygen sensor or air-fuel ratio sensor located upstream of aftertreatment devices is replaced with a deteriorated or defective sensor, or an electronic simulation of such, resulting in exhaust emissions exceeding any of the following levels: for 2007 through 2009 model years, 4 times the applicable PM standard, or 3 times the applicable NO_X standard, or 2.5 times the applicable NMHC standard, or 2.5 times the applicable CO standard and, for 2010 through 2012 model years, the applicable PM standard + 0.02 g/mi, or the applicable NO_X standard + 0.3 g/mi, or 2.5 times the applicable NMHC standard, or 2.5 times the applicable CO standard and, for 2013 and later model years, the applicable PM standard + 0.02 g/mi, or the applicable NO_X standard + 0.3 g/mi, or 2 times the applicable NMHC standard, or 2 times the applicable CO standard.

(iii) If so equipped, any NO_X sensor is replaced with a deteriorated or defective sensor, or an electronic simulation of such, resulting in exhaust emissions exceeding any of the following levels: for 2007 through 2009 model years, 5 times the applicable PM standard, or 4 times the applicable NO_X standard and, for 2010 through 2012 model years, 4 times the applicable PM standard, or the applicable NO_X standard + 0.6 g/mi and, for 2013 and later model years, the applicable PM standard + 0.04 g/mi, or the applicable NO_X standard + 0.3 g/mi.

(4) [Reserved]

(5) A malfunction condition is induced in any emission-related engine system or component, including but not necessarily limited to, the exhaust gas recirculation (EGR) system, if equipped, and the fuel control system, singularly resulting in exhaust emissions exceeding any of the following levels: for 2007 through 2009 model years, 4 times the applicable PM standard or 3 times the applicable NO_X standard, or 2.5 times the applicable NMHC standard, or 2.5 times the applicable CO standard and, for 2010 through 2012 model years, 4 times the applicable

PM standard, or the applicable NO_X standard + 0.3 g/mi, or 2.5 times the applicable NMHC standard, or 2.5 times the applicable CO standard and, for 2013 and later model years, the applicable PM standard + 0.02 g/mi, or the applicable NO_X standard + 0.3 g/mi, or 2 times the applicable NMHC standard, or 2 times the applicable CO standard.

(6) A malfunction condition is induced in an electronic emission-related powertrain system or component not otherwise described in this paragraph (o) that either provides input to or receives commands from the on-board computer resulting in a measurable impact on emissions.

[65 FR 59965, Oct. 6, 2000, as amended at 66 FR 5189, Jan. 18, 2001; 68 FR 35799, June 17, 2003; 70 FR 75410, Dec. 20, 2005; 71 FR 51488, Aug. 30, 2006; 71 FR 78094, Dec. 28, 2006; 74 FR 8420, Feb. 24, 2009; 75 FR 25685, May 7, 2010; 76 FR 57377, Sept. 15, 2011; 79 FR 23708, Apr. 28, 2014]

§ 86.1806–17 Onboard diagnostics.

Model year 2017 and later vehicles must have onboard diagnostic (OBD) systems as described in this section. OBD systems must generally detect malfunctions in the emission control system, store trouble codes corresponding to detected malfunctions, and alert operators appropriately.

(a) Vehicles must comply with the 2013 OBD requirements adopted for California as described in this paragraph (a). California's 2013 OBD–II requirements are part of Title 13, § 1968.2 of the California Code of Regulations, approved on July 31, 2013 (incorporated by reference in § 86.1). The following clarifications and exceptions apply for vehicles certified under this subpart:

(1) For vehicles not certified in California, references to vehicles meeting certain California Air Resources Board emission standards are understood to refer to the corresponding EPA emission standards for a given family, where applicable. Use good engineering judgment to correlate the specified standards with the bin standards that apply under this subpart.

(2) Vehicles must comply with OBD requirements throughout the useful life as specified in § 86.1805. If the specified useful life is different for evaporative and exhaust emissions, the useful life specified for evaporative emissions applies for monitoring related to fuel-system leaks and the useful life specified for exhaust emissions applies for all other parameters.

(3) The purpose and applicability statements in 13 CCR 1968.2(a) and (b) do not apply.

(4) The anti-tampering provisions in 13 CCR 1968.2(d)(1.4) do not apply.

(5) The requirement to verify proper alignment between the camshaft and crankshaft described in 13 CCR 1968.2(e)(15.2.1)(C) applies only for vehicles equipped with variable valve timing.

(6) The deficiency provisions described in paragraph (c) of this section apply instead of 13 CCR 1968.2(k).

(7) For emergency vehicles only, the provisions of 13 CCR 1968.2(e)(6.2.1) related to monitoring and identification of air-fuel ratio cylinder imbalance, as part of the fuel system monitoring, do not apply until model year 2020, unless the vehicle met the requirements in 2016 or earlier model years.

(8) Apply thresholds for exhaust emission malfunctions from Tier 3 vehicles based on the thresholds calculated for the corresponding bin standards in the California LEV II program as prescribed for the latest model year in 13 CCR 1968.2(e) and (f). For example, for Tier 3 Bin 160 standards, apply the threshold that applies for the LEV standards. For cases involving Tier 3 standards that have no corresponding bin standards from the California LEV II program, use the next highest LEV II bin. For example, for Tier 3 Bin 50 standards, apply the threshold that applies for the ULEV standards. You may apply thresholds that are more stringent than we require under this paragraph (a)(8).

(b) The following additional provisions apply:

(1) Model year 2017 and later vehicles must meet the OBD system requirements described in this paragraph (b)(1). When monitoring conditions are satisfied, test vehicles must detect the presence of a leak with an effective leak diameter at or above 0.020 inches, illuminate the MIL, and store the appropriate confirmed diagnostic trouble codes (DTCs) (13 CCR 1968.2 refers to these as fault codes). For a 0.020 inch leak, the DTC(s) shall be a generic SAE

J2012 DTC that is specific to an EVAP system very small leak (e.g., P0456, P04EE, or P04EF) or an equivalent manufacturer-specific DTC that we approve. Conduct testing using an O'Keefe Controls Co. metal ''Type B'' orifice with a diameter of 0.020 inches or an alternate orifice diameter approved under 13 CCR 1968.2(e)(4.2.3) or (e)(4.2.4).

(i) Use the methodology specified in 13 CCR 1968.2(h)(2.2) to select test vehicles to demonstrate that the OBD system is capable of detecting a 0.020 inch leak installed in the evaporative system, except that the manufacturer may use production-representative vehicles instead of the vehicle options specified in 13 CCR 1968.2(h)(2.3).

(ii) Perform tests in the laboratory, with or without a dynamometer, or on an outdoor road surface, as necessary to exercise the vehicle's ability to detect leaks in the evaporative system.

(iii) Perform at least two tests to evaluate the OBD system for leaks that are installed near the fuel fill pipe and near the canister. The implanted leak near the fuel fill pipe must be at the fuel cap or between the fuel cap and the fuel tank. The implanted leak near the canister must be in the vapor line between the canister and the fuel tank, or between the canister and the purge valve). If a vehicle has multiple canisters or fuel fill pipes, repeat the testing to evaluate the system for implanted leaks corresponding to each canister and fuel fill pipe. You may propose to implant leaks in different locations (e.g., near the purge valve); we will approve your alternate leak location if it more effectively demonstrates leak detection for your particular fuel system design.

(iv) If vehicle operation is needed to fulfill preconditioning (i.e., when engine-off tests require driving before vehicle shutdown to enable the engine-off monitor) or monitoring conditions for leak detection under this paragraph (b)(1) utilize an FTP cycle, Unified cycle, or some other specified operating cycle that will satisfy the approved monitoring or preconditioning conditions without the interference of approved deficiencies. Continue vehicle operation as needed to illuminate the MIL and store the appropriate DTCs.

(v) Emission measurements are not required during this OBD evaporative system leak monitoring demonstration testing.

(vi) For test groups not selected for testing in a given model year, you may instead provide a statement in the application for certification, consistent with good engineering judgment, that vehicles meet leak-detection requirements based on previous OBD tests, development tests, or other appropriate information. For any untested test groups, the statement specified in § 86.1844–01(d)(8) applies with regard to the leak monitoring requirement. We may ask you to provide the data and other information that formed the basis for your statement. Select test groups in later model years such that testing will rotate to cover your whole product line over time.

(vii) Submit the following information in the application for certification:

(A) Describe the test sequence.

(B) Identify the driving cycle used and the time expired and distance driven before the MIL illuminated.

(C) Identify the ranges of in-use environmental and vehicle operating conditions for which the vehicle will not meet the leak-detection specifications described in this paragraph (b)(1). To meet this requirement, you may give us the same information you gave the California Air Resources Board regarding enable conditions for the evaporative system leak monitor.

(D) Identify the confirmed and permanent DTCs set by the OBD system during testing.

(E) Include the freeze frame information stored at the point the fault is detected.

(F) Include the SAE J1979 test results (e.g., Mode/Service $06) corresponding to the DTCs that were stored during the test.

(viii) If you have one or more vehicle models in model year 2016 that do not comply with the leak requirements in 13 CCR 1968.2(e)(4), you may comply with the requirements of this paragraph (b)(1) in model year 2017 by substituting model year 2016 vehicles on

an equal-percentage basis. Demonstrate this by calculating the percentage of vehicles subject to OBD requirements under this subpart that meet the requirements of this paragraph (b)(1) in model years 2016 and 2017; the sum of these two percentage values must be at or above 100 percent. Any model year 2017 vehicles not meeting the requirements of this paragraph (b)(1), as allowed by this paragraph (b)(1)(viii), may not be counted as compliant Tier 3 vehicles under the alternative phase-in specified in § 86.1813–17(g)(2)(ii).

(2) For vehicles subject to the leak standard in § 86.1813, OBD systems must record in computer memory the result of the most recent successfully completed diagnostic check for a 0.020 inch leak. Someone must be able to use the data to determine the miles driven since the last check occurred, the pass/fail result, and whether there has been a check since the computer memory was last cleared (e.g., from a scan tool command or battery disconnect). The system may be designed to keep data only from the previous 750 miles of driving. (Note: This 750 mile requirement is related to the use of the OBD evaporative leak monitor in the leak test and should not be confused with either the minimum or maximum distance values specified in Table G–19 of SAE J1979.) The data must be reported in a standardized format consistent with other data required for the OBD system. The results must be scan-readable.

(3) For vehicles with fuel tanks exceeding 25 gallons nominal fuel tank capacity, you may request our approval for a leak threshold greater than 0.020 inches, up to a maximum value of 0.040 inches. We will generally approve a leak threshold equal to the standard that applies under § 86.1813.

(c) You may ask us to accept as compliant a vehicle that does not fully meet specific requirements under this section. Such deficiencies are intended to allow for minor deviations from OBD standards under limited conditions. We expect vehicles to have functioning OBD systems that meet the objectives stated in this section. The following provisions apply regarding OBD system deficiencies:

(1) Except as specified in paragraph (d) of this section, we will not approve a deficiency that involves the complete lack of a major diagnostic monitor, such as monitors related to exhaust aftertreatment devices, oxygen sensors, air-fuel ratio sensors, NO_X sensors, engine misfire, evaporative leaks, and diesel EGR (if applicable).

(2) We will approve a deficiency only if you show us that full compliance is infeasible or unreasonable considering any relevant factors, such as the technical feasibility of a given monitor, or the lead time and production cycles of vehicle designs and programmed computing upgrades.

(3) Our approval for a given deficiency applies only for a single model year, though you may continue to ask us to extend a deficiency approval in renewable one-year increments. We may approve an extension if you demonstrate an acceptable level of effort toward compliance and show that the necessary hardware or software modifications would pose an unreasonable burden.

(d) For alternative-fuel vehicles, manufacturers may request a waiver from specific requirements for which monitoring may not be reliable for operation with the alternative fuel. However, we will not waive requirements that we judge to be feasible for a particular manufacturer or vehicle model.

(e) For alternative-fuel conversions, manufacturers may meet the requirements of § 86.1806–05 instead of the requirements of this section.

(f) You may ask us to waive certain requirements in this section for emergency vehicles. We will approve your request for an appropriate duration if we determine that the OBD requirement in question could harm system performance in a way that would impair a vehicle's ability to perform its emergency functions.

(g) The following interim provisions describe an alternate implementation schedule for the requirements of this section in certain circumstances:

(1) Manufacturers may delay complying with all the requirements of this section, and instead meet all the requirements that apply under § 86.1806–05, for any heavy-duty vehicles that are

not yet subject to the Tier 3 standards in § 86.1816.

(2) Except as specified in this paragraph (g)(2), small-volume manufacturers may delay complying with all the requirements of this section until model year 2022, and instead meet all the requirements that apply under § 86.1806–05 during those years. This provision does not apply for a vehicle model if it is identical to a 2016 vehicle model that was certified to meet California's OBD requirements under § 86.1806–05(j)(3). A vehicle model is considered identical to one from model year 2016 if it is certified in the current year based on the same test data for exhaust or evaporative emissions under the carryover data provisions of this subpart.

(3) Manufacturers may disregard the requirements of this section that apply above 8,500 pounds GVWR before model year 2019 and instead meet all the requirements that apply under § 86.1806–05. This also applies for model year 2019 vehicles from a test group with vehicles that have a Job 1 date on or before March 3, 2018 (see 40 CFR 85.2304).

[79 FR 23709, Apr. 28, 2014, as amended at 80 FR 9104, Feb. 19, 2015]

§ 86.1807–01 Vehicle labeling.

(a) The manufacturer of any motor vehicle subject to the applicable emission standards of this subpart, shall, at the time of manufacture, affix a permanent legible label, of the type and in the manner described in this section, containing the information prescribed in this section, to all production models of such vehicles available for sale to the public and covered by a Certificate of Conformity under § 86.1848–01.

(1) A permanent, legible label shall be affixed in a readily visible position in the engine compartment.

(2) The label shall be affixed by the vehicle manufacturer who has been issued the Certificate of Conformity for such vehicle, in such manner that it cannot be removed without destroying or defacing the label. The label shall not be affixed to any equipment which is easily detached from such vehicle.

(3) The label shall contain the following information lettered in the English language in block letters and numerals, which shall be of a color that contrasts with the background of the label:

(i) The label heading: Vehicle Emission Control Information;

(ii) Full corporate name and trademark of manufacturer;

(iii) Engine displacement (in cubic inches or liters), test group identification and evaporative/refueling family identification;

(iv) [Reserved]

(v) An unconditional statement of compliance with the appropriate model year U.S. EPA regulations which apply to light-duty vehicles, light-duty trucks, medium-duty passenger vehicles, or complete heavy-duty vehicles;

(vi) The exhaust emission standards (or FEL, as applicable) to which the test group is certified, and for test groups having different in-use standards, the corresponding exhaust emission standards that the test group must meet in use. In lieu of this requirement, manufacturers may use the standardized test group name designated by EPA;

(vii) [Reserved]

(viii) Vehicles granted final admission under 40 CFR 85.1505 must comply with the labeling requirements contained in 40 CFR 85.1510;

(ix) [Reserved]

(x) For vehicles designed to be capable of operating on fuels other than gasoline or diesel, the statement ''This vehicle is certified to operate on [specify fuel(s)]''.

(b) The provisions of this section shall not prevent a manufacturer from also reciting on the label that such vehicle (or engine) conforms to any applicable state emission standards for new motor vehicles (or new motor vehicle engines) or any other information that such manufacturer deems necessary for, or useful to, the proper operation and satisfactory maintenance of the vehicle (or engine).

(c)(1) The manufacturer of any light-duty vehicle, light-duty truck, medium-duty passenger vehicle, or heavy-duty vehicle subject to the emission standards of this subpart shall, in addition and subsequent to setting forth those statements on the label required by the Department of Transportation (DOT) pursuant to 49 CFR 567.4 set

forth on the DOT label or on an additional label located in proximity to the DOT label and affixed as described in 49 CFR 567.4(b), the following information in the English language, lettered in block letters and numbers not less than three thirty-seconds of an inch high, of a color that contrasts with the background of the label:

(i) The heading: ''Vehicle Emission Control Information.''

(ii)(A) For light-duty vehicles, the statement: ''This Vehicle Conforms to U.S. EPA Regulations Applicable to XXX-Fueled 20XX Model Year New Motor Vehicles.''

(B) For light-duty trucks, the statement: ''This Vehicle Conforms to U.S. EPA Regulations Applicable to XXX-Fueled 20XX Model Year New Light-Duty Trucks.''

(C) For medium-duty passenger vehicles, the statement: ''This Vehicle Conforms to U.S. EPA Regulations Applicable to XXX-fueled 20XX Model Year New Medium-Duty Passenger Vehicles.''

(D) For heavy-duty vehicles, the statement: ''This Vehicle Conforms to U.S. EPA Regulations Applicable to XXX-fueled 20XX Model Year Chassis-Certified New Heavy-Duty Vehicles.''

(iii) [Reserved]

(2)–(3) [Reserved]

(d)(1) Incomplete light-duty trucks shall have the following prominent statement printed on the label required by paragraph (a)(3)(v) of this section: ''This vehicle conforms to U.S. EPA regulations applicable to 20xx Model year Light-Duty Trucks under the special provisions of 40 CFR 86.1801–01(c)(1) when it does not exceed XXX pounds in curb weight, XXX pounds in gross vehicle weight rating, and XXX square feet in frontal area.''

(2) Incomplete heavy-duty vehicles optionally certified in accordance with the provisions for complete heavy-duty vehicles under the special provisions of § 86.1801–01(c)(2) shall have the following prominent statement printed on the label required by paragraph (a)(3)(v) of this section: ''This vehicle conforms to U.S. EPA regulations applicable to 20xx Model year Complete Heavy-Duty Vehicles under the special provisions of 40 CFR 86.1801–01(c)(2) when it does not exceed XXX pounds in curb weight, XXX pounds in gross vehicle weight rating, and XXX square feet in frontal area.''

(e) The manufacturer of any incomplete light-duty vehicle, light-duty truck, or heavy-duty vehicle shall notify the purchaser of such vehicle of any curb weight, frontal area, or gross vehicle weight rating limitations affecting the emission certificate applicable to that vehicle. This notification shall be transmitted in a manner consistent with National Highway Traffic Safety Administration safety notification requirements published in 49 CFR part 568.

(f) All light-duty vehicles, light-duty trucks, medium-duty passenger vehicles, and complete heavy-duty vehicles shall comply with SAE Recommended Practices J1877 ''Recommended Practice for Bar-Coded Vehicle Identification Number Label,'' (July 1994). SAE J1877 is incorporated by reference (see § 86.1).

(g) The Administrator may approve in advance other label content and formats provided the alternative label contains information consistent with this section.

(h) Vehicles powered by model year 2007 through 2013 diesel-fueled engines must include permanent readily visible labels on the dashboard (or instrument panel) and near all fuel inlets that state ''Use Ultra Low Sulfur Diesel Fuel Only'' or ''Ultra Low Sulfur Diesel Fuel Only''.

(i) For vehicles with one or more approved AECDs for emergency vehicles under paragraph (4) of the definition of ''defeat device'' in § 86.1803, include the following statement on the emission control information label: ''THIS VEHICLE HAS A LIMITED EXEMPTION AS AN EMERGENCY VEHICLE.''

[64 FR 23925, May 4, 1999, as amended at 65 FR 6853, Feb. 10, 2000; 65 FR 59969, Oct. 6, 2000; 70 FR 72928, Dec. 8, 2005; 77 FR 34146, June 8, 2012; 79 FR 23711, Apr. 28, 2014]

§ 86.1808–01 Maintenance instructions.

(a) The manufacturer shall furnish or cause to be furnished to the purchaser of each new motor vehicle subject to the standards prescribed in this subpart, as applicable, written instructions for the proper maintenance and use of the vehicle, by the purchaser

consistent with the provisions of § 86.1834–01, which establishes what scheduled maintenance the Administrator approves as being reasonable and necessary.

(1) The maintenance instructions required by this section shall be in clear, and to the extent practicable, nontechnical language.

(2) The maintenance instructions required by this section shall contain a general description of the documentation which the manufacturer will require from the ultimate purchaser or any subsequent purchaser as evidence of compliance with the instructions.

(b) Instructions provided to purchasers under paragraph (a) of this section shall specify the performance of all scheduled maintenance performed by the manufacturer on certification durability vehicles and, in cases where the manufacturer performs less maintenance on certification durability data vehicles than the allowed limit, may specify the performance of any scheduled maintenance allowed under § 86.1834–01.

(c) Scheduled emission-related maintenance in addition to that performed under § 86.1834–01 may only be recommended to offset the effects of abnormal in-use operating conditions, except as provided in paragraph (d) of this section. The manufacturer shall be required to demonstrate, subject to the approval of the Administrator, that such maintenance is reasonable and technologically necessary to assure the proper functioning of the emission control system. Such additional recommended maintenance shall be clearly differentiated, in a form approved by the Administrator, from that approved under § 86.1834–01.

(d) Inspections of emission-related parts or systems with instructions to replace, repair, clean, or adjust the parts or systems if necessary, are not considered to be items of scheduled maintenance which insure the proper functioning of the emission control system. Such inspections, and any recommended maintenance beyond that approved by the Administrator as reasonable and necessary under paragraphs (a), (b), and (c) of this section, may be included in the written instructions furnished to vehicle owners under paragraph (a) of this section, provided that such instructions clearly state, in a form approved by the Administrator, that the owner need not perform such inspections or recommended maintenance in order to maintain the emission warranty or manufacturer recall liability.

(e) If the vehicle has been granted an alternative useful life period under the provisions of § 86.1805–01(c), the manufacturer may choose to include in such instructions an explanation of the distinction between the alternative useful life specified on the label, and the emissions defect and emissions performance warranty period. The explanation must clearly state that the useful life period specified on the label represents the average period of use up to retirement or rebuild for the test group represented by the engine used in the vehicle. An explanation of how the actual useful lives of engines used in various applications are expected to differ from the average useful life may be included. The explanation(s) shall be in clear, non-technical language that is understandable to the ultimate purchaser.

(f) Emission control diagnostic service information:

(1) *Applicability*. Manufacturers are subject to the provisions of this paragraph (f) for 1996 model year for and later light-duty vehicles and light-duty trucks. Manufacturers are subject to the provisions of this paragraph (f) for 2005 model year and later heavy-duty vehicles at or below 14,000 pounds GVWR and the corresponding engines that are subject to the OBD requirements of this part.

(2) *General requirements*. (i) Manufacturers shall furnish or cause to be furnished to any person engaged in the repairing or servicing of motor vehicles or motor vehicle engines, or the Administrator upon request, any and all information needed to make use of the on-board diagnostic system and such other information, including instructions for making emission-related diagnoses and repairs, including but not limited to service manuals, technical service bulletins, recall service information, bi-directional control information, and training information, unless

such information is protected by section 208(c) of the Act as a trade secret. No such information may be withheld under section 208(c) of the Act if that information is provided (directly or indirectly) by the manufacturer to franchised dealers or other persons engaged in the repair, diagnosing, or servicing of motor vehicles or motor vehicle engines.

(ii) *Definitions*. The following definitions apply for this paragraph (f):

(A) Aftermarket service provider means any individual or business engaged in the diagnosis, service, and repair of a motor vehicle or engine, who is not directly affiliated with a manufacturer or manufacturer-franchised dealership.

(B) Bi-directional control means the capability of a diagnostic tool to send messages on the data bus that temporarily overrides the module's control over a sensor or actuator and gives control to the diagnostic tool operator. Bi-directional controls do not create permanent changes to engine or component calibrations.

(C) Data stream information means information (i.e., messages and parameters) originated within the vehicle by a module or intelligent sensors (i.e., a sensor that contains and is controlled by its own module) and transmitted between a network of modules and/or intelligent sensors connected in parallel with either one or more communication wires. The information is broadcast over the communication wires for use by the OBD system to gather information on emissions-related components or systems and from other vehicle modules that may impact emissions, including but not limited to systems such as chassis or transmission. For the purposes of this section, data stream information does not include engine calibration related information, or any data stream information from systems or modules that do not impact emissions.

(D) Emissions-related information means any information related to the diagnosis, service, and repair of emissions-related components. Emissions-related information includes, but is not limited to, information regarding any system, component or part of a vehicle that controls emissions and any system, component and/or part associated with the powertrain system, including, but not limited to:

(*1*) The engine, the fuel system and ignition system;

(*2*) Information for any system, component or part that is likely to impact emissions, such as transmission systems, and any other information specified by the Administrator to be relevant to the diagnosis and repair of an emissions-related problem; and

(*3*) Any other information specified by the Administrator to be relevant for the diagnosis and repair of an emissions-related failure found through the inspection and maintenance program after such finding has been communicated to the affected manufacturer(s).

(E) Emissions-related training information means any information related to training or instruction for the purpose of the diagnosis, service, and repair of emissions-related components.

(F) Enhanced service and repair information means information which is specific for an original equipment manufacturer's brand of tools and equipment. This includes computer or anti-theft system initialization information necessary for the completion of any emissions-related repair on motor vehicles that employ integral vehicle security systems.

(G) Equipment and tool company means a registered automotive equipment or software company either public or private that is engaged in, or plans to engage in, the manufacture of automotive scan tool reprogramming equipment or software.

(H) Generic service and repair information means information which is not specific for an original equipment manufacturer's brand of tools and equipment.

(I) Indirect information means any information that is not specifically contained in the service literature, but is contained in items such as tools or equipment provided to franchised dealers (or others). This includes computer or anti-theft system initialization information necessary for the completion of any emissions-related repair on motor vehicles that employ integral vehicle security systems.

(J) Intermediary means any individual or entity, other than an original equipment manufacturer, which provides service or equipment to aftermarket service providers.

(K) Manufacturer-franchised dealership means any service provider with which a manufacturer has a direct business relationship.

(L) Third-party information provider means any individual or entity, other than an original equipment manufacturer, who consolidates manufacturer service information and makes this information available to aftermarket service providers.

(M) Third-party training provider means any individual or entity, other than an original equipment manufacturer who develops and/or delivers instructional and educational material for automotive training courses.

(3) *Information dissemination*. Each manufacturer shall provide or cause to be provided to the persons specified in paragraph (f)(2)(i) of this section and to any other interested parties a manufacturer-specific Web site containing the information specified in paragraph (f)(2)(i) of this section for vehicles identified in paragraph (f)(1) of this section that have been offered for sale; this requirement does not apply to indirect information, including the information specified in paragraphs (f)(12) through (f)(16) of this section. Each manufacturer Web site shall—

(i) Provide access in full-text to all of the information specified in paragraph (f)(5) of this section.

(ii) Be updated at the same time as manufacturer-franchised dealership World Wide Web sites;

(iii) Provide users with a description of the minimum computer hardware and software needed by the user to access that manufacturer's information (e.g., computer processor speed and operating system software). This description shall appear when users first logon to the home page of the manufacturer's Web site.

(iv) Provide Short-Term (24 to 72 hours), Mid-Term (30-day period), and Long-Term (365-day period) Web site subscription options to any person specified in paragraph (f)(2)(i) of this section whereby the user will be able to access the site, search for the information, and purchase, view and print the information at a fair and reasonable cost as specified in paragraph (f)(7) of this section for each of the options. In addition, for each of the subscription options, manufacturers are required to make their entire site accessible for the respective period of time and price. In other words, a manufacturer may not limit any or all of the subscription options to just one make or one model.

(v) Allow the user to search the manufacturer Web site by various topics including but not limited to model, model year, key words or phrases, etc., while allowing ready identification of the latest vehicle calibration. Manufacturers who do not use model year to classify their vehicles in their service information may use an alternate vehicle delineation such as body series. Any manufacturer utilizing this flexibility shall create a cross-reference to the corresponding model year and provide this cross-reference on the manufacturer Web site home page.

(vi) Provide accessibility using common, readily available software and shall not require the use of software, hardware, viewers, or browsers that are not readily available to the general public. Manufacturers shall also provide hyperlinks to any plug-ins, viewers or browsers (e.g. Adobe Acrobat or Netscape) needed to access the manufacturer Web site.

(vii) Allow simple hyper-linking to the manufacturer Web site from government Web sites and automotive-related Web sites.

(viii) Allow access to the manufacturer Web sites with no limits on the modem speed by which aftermarket service providers or other interested parties can connect to the manufacturer Web site.

(ix) Possess sufficient server capacity to allow ready access by all users and have sufficient capacity to assure that all users may obtain needed information without undue delay.

(x) Correct or delete broken Web links on a weekly basis.

(xi) Allow for Web site navigation that does not require a user to return to the manufacturer home page or a search engine in order to access a different portion of the site.

(xii) Allow all users to print out any and all of the materials required to be made available on the manufacturers Web site, including the ability to print it at the users location.

(4) *Small volume provisions for information dissemination.* (i) Manufacturers with annual sales of less than 5,000 vehicles shall have until June 28, 2004 to launch their individual Web sites as required by paragraph (f)(3) of this section.

(ii) Manufacturers with annual sales of less than 1,000 vehicles may, in lieu of meeting the requirement of paragraph (f)(3) of this section, request the Administrator to approve an alternative method by which the required emissions-related information can be obtained by the persons specified in paragraph (f)(2)(i) of this section.

(5) *Required information.* All information relevant to the diagnosis and completion of emissions-related repairs shall be posted on manufacturer Web sites. This excludes indirect information specified in paragraphs (f)(6) and (f)(12) through (f)(16) of this section. To the extent that this information does not already exist in some form for their manufacturer-franchised dealerships, manufacturers are required to develop and make available the information required by this section to both their manufacturer-franchised dealerships and the aftermarket. The required information includes, but is not limited to:

(i) Manuals, including subsystem and component manuals developed by a manufacturer's third party supplier that are made available to manufacturer-franchised dealerships, technical service bulletins (TSBs), recall service information, diagrams, charts, and training materials. Manuals and other such service information from third party suppliers are not required to be made available in full-text on manufacturer Web sites as described in paragraph (f)(3) of this section. Rather, manufacturers must make available on the manufacturer Web site as required by paragraph (f)(3) of this section an index of the relevant information and instructions on how to order such third party information. In the alternative, a manufacturer can create a link from its Web site to the Web site(s) of the third party supplier.

(ii) OBD system information which includes, but is not limited to, the following:

(A) A general description of the operation of each monitor, including a description of the parameter that is being monitored;

(B) A listing of all typical OBD diagnostic trouble codes associated with each monitor;

(C) A description of the typical enabling conditions (either generic or monitor-specific) for each monitor (if equipped) to execute during vehicle operation, including, but not limited to, minimum and maximum intake air and engine coolant temperature, vehicle speed range, and time after engine startup. In addition, manufacturers shall list all monitor-specific OBD drive cycle information for all major OBD monitors as equipped including, but not limited to, catalyst, catalyst heater, oxygen sensor, oxygen sensor heater, evaporative system, exhaust gas re-circulation (EGR), secondary air, and air conditioning system. Additionally, for diesel vehicles under 14,000 pounds GVWR which also perform misfire, fuel system and comprehensive component monitoring under specific driving conditions (i.e., non-continuous monitoring; as opposed to spark ignition engines that monitor these systems under all conditions or continuous monitoring), the manufacturer shall make available monitor-specific drive cycles. Any manufacturer who develops generic drive cycles, either in addition to, or instead of, monitor-specific drive cycles shall also make these available in full-text on manufacturer Web sites;

(D) A listing of each monitor sequence, execution frequency and typical duration;

(E) A listing of typical malfunction thresholds for each monitor;

(F) For OBD parameters for specific vehicles that deviate from the typical parameters, the OBD description shall indicate the deviation and provide a separate listing of the typical values for those vehicles;

(G) Identification and scaling information necessary to interpret and understand data available to a generic

scan tool through ''mode 6'', pursuant to Society of Automotive Engineers SAE J1979, ''EE Diagnostic Test Modes''(Incorporated by reference, see § 86.1).

(H) Algorithms, look-up tables, or any values associated with look-up tables are not required to be made available.

(iii) Any information regarding any system, component, or part of a vehicle monitored by the OBD system that could in a failure mode cause the OBD system to illuminate the malfunction indicator light (MIL);

(iv) Any information on other systems that can effect the emission system within a multiplexed system (including how information is sent between emission-related system modules and other modules on a multiplexed bus);

(v) Manufacturer-specific emissions-related diagnostic trouble codes (DTCs) and any related service bulletins, trouble shooting guides, and/or repair procedures associated with these manufacturer-specific DTCs; and

(vi) Information regarding how to obtain the information needed to perform reinitialization of any vehicle computer or anti-theft system following an emissions-related repair.

(6) *Anti-theft system initialization information.* Computer or anti-theft system initialization information and/or related tools necessary for the proper installation of on-board computers or necessary for the completion of any emissions-related repair on motor vehicles that employ integral vehicle security systems or the repair or replacement of any other emission-related part shall be made available at a fair and reasonable cost to the persons specified in paragraph (f)(2)(i) of this section.

(i) Except as provided under paragraph (f)(6)(ii) of this section, manufacturers must make this information available to persons specified in paragraph (f)(2)(i) of this section, such that such persons will not need any special tools or manufacturer-specific scan tools to perform the initialization. Manufacturers may make such information available through, for example, generic aftermarket tools, a pass-through device, or inexpensive manufacturer specific cables.

(ii) A manufacturer may request Administrator approval for an alternative means to re-initialize vehicles for some or all model year vehicles through the 2007 model year by 1 month following the effective date of the final rule. The Administrator shall approve the request only after the following conditions have been met:

(A) The manufacturer must demonstrate that the availability of such information to aftermarket service providers would significantly increase the risk of vehicle theft.

(B) The manufacturer must make available a reasonable alternative means to install or repair computers, or to otherwise repair or replace an emission-related part.

(C) Any alternative means proposed by a manufacturer cannot require aftermarket technicians to use a manufacturer-franchised dealership to obtain information or special tools to re-initialize the anti-theft system. All information must come directly from the manufacturer or a single manufacturer-specified designee.

(D) Any alternative means proposed by a manufacturer must be available to aftermarket technicians at a fair and reasonable price.

(E) Any alternative must be available to aftermarket technicians within twenty-four hours of the initial request.

(F) Any alternative must not require the purchase of a special tool or tools, including manufacturer-specific tools, to complete this repair. Alternatives may include lease of such tools, but only for appropriately minimal cost.

(G) In lieu of leasing their manufacturer-specific tool to meet this requirement, a manufacturer may also release the necessary information to equipment and tool manufacturers for incorporation into aftermarket scan tools. Any manufacturer choosing this option must release the information to equipment and tool manufacturers within 60 days of Administrator approval. Manufacturers may also comply with this requirement using SAE J2534 for some or all model years through model year 2007.

(7) *Cost of required information.* (i) All information required to be made available by this section shall be made available at a fair and reasonable price. In determining whether a price is fair and reasonable, consideration may be given to relevant factors, including, but not limited to, the following:

(A) The net cost to the manufacturer-franchised dealerships for similar information obtained from manufacturers, less any discounts, rebates, or other incentive programs.

(B) The cost to the manufacturer for preparing and distributing the information, excluding any research and development costs incurred in designing and implementing, upgrading or altering the onboard computer and its software or any other vehicle part or component. Amortized capital costs for the preparation and distribution of the information may be included.

(C) The price charged by other manufacturers for similar information.

(D) The price charged by manufacturers for similar information prior to the launch of manufacturer Web sites.

(E) The ability of aftermarket technicians or shops to afford the information.

(F) The means by which the information is distributed.

(G) The extent to which the information is used, which includes the number of users, and frequency, duration, and volume of use.

(H) Inflation.

(ii) By August 26, 2003, each manufacturer shall submit to the Administrator a request for approval of their pricing structure for their Web sites and amounts to be charged for the information required to be made available under paragraphs (f)(3) and (f)(5) of this section. Subsequent to the approval of the manufacturer Web site pricing structure, each manufacturer shall notify the Administrator upon the increase in price of any one or all of the subscription options of 20 percent or more above the previously approved price, taking inflation into account.

(A) The manufacturer shall submit a request to the Administrator that sets forth a detailed description of the pricing structure and amounts, and support for the position that the pricing structure and amounts are fair and reasonable by addressing, at a minimum, each of the factors specified in paragraph (f)(7)(i) of this section.

(B) The Administrator will act on the request within 180 days following receipt of a complete request or following receipt of any additional information requested by the Administrator.

(C) The Administrator may decide not to approve, or to withdraw approval for a manufacturer's pricing structure and amounts based on a conclusion that this pricing structure and/or amounts are not, or are no longer, fair and reasonable, by sending written notice to the manufacturer explaining the basis for this decision.

(D) In the case of a decision by the Administrator not to approve or to withdraw approval, the manufacturer shall within three months following notice of this decision, obtain Administrator approval for a revised pricing structure and amounts by following the approval process described in this paragraph (f)(7)(ii).

(8) *Unavailable information.* Any information which is not provided at a fair and reasonable price shall be considered unavailable, in violation of these regulations and section 202(m)(5) of the Clean Air Act.

(9) *Third-party information providers.* By December 24, 2003, manufacturers shall, for model year 2004 and later vehicles and engines, make available to third-party information providers as defined in paragraph (f)(2)(ii) of this section with whom they engage in licensing or business arrangements;

(i) The required emissions-related information as specified in paragraph (f)(5) of this section either:

(A) Directly in electronic format such as diskette or CD-ROM using non-proprietary software, in English; or

(B) Indirectly via a Web site other than that required by paragraph (f)(3) of this section;

(ii) For any manufacturer who utilizes an automated process in their manufacturer-specific scan tool for diagnostic fault trees, the data schema, detail specifications, including category types/codes and vehicle codes, and data format/content structure of the diagnostic trouble trees.

(iii) Manufacturers can satisfy the requirement of paragraph (f)(9)(ii) of this section by making available diagnostic trouble trees on their manufacturer Web sites in full-text.

(iv) Manufacturers are not responsible for the accuracy of the information distributed by third parties. However, where manufacturers charge information intermediaries for information, whether through licensing agreements or other arrangements, manufacturers are responsible for inaccuracies contained in the information they provide to third-party information providers.

(10) *Required emissions-related training information*. By December 24, 2003, for emissions-related training information, manufacturers shall:

(i) Video tape or otherwise duplicate and make available for sale on manufacturer Web sites within 30 days after transmission any emissions-related training courses provided to manufacturer-franchised dealerships via the Internet or satellite transmission;

(ii) Provide on the manufacturer's Web site an index of all emissions-related training information available for purchase by aftermarket service providers for 1994 and newer vehicles. The required information must be made available for purchase within 3 months of model introduction and then must be made available at the same time it is made available to manufacturer-franchised dealerships, whichever is earlier. The index shall describe the title of the course or instructional session, the cost of the video tape or duplicate, and information on how to order the item(s) from the manufacturer Web site. All of the items available must be shipped within 24 hours of the order being placed and are to be made available at a fair and reasonable price as described in paragraph (f)(7) of this section. Manufacturers unable to meet the 24 hour shipping requirement under circumstances where orders exceed supply and additional time is needed by the distributor to reproduce the item being ordered may exceed the 24 hour shipping requirement, but in no instance can take longer than 14 days to ship the item.

(iii) Provide access to third-party training providers as defined in paragraph (f)(2)(ii) of this section all emission-related training courses transmitted via satellite or Internet offered to their manufacturer-franchised dealerships. Manufacturers may not charge unreasonable up-front fees to third-party training providers for this access, but may require a royalty, percentage, or other arranged fee based on per-use enrollment/subscription basis. Manufacturers may take reasonable steps to protect any copyrighted information and are not required to provide this information to parties that do not agree to such steps.

(11) *Timeliness and maintenance of information dissemination*. (i) General requirements. Subsequent to the initial launch of the manufacturer's Web site, manufacturers must make the information required under paragraph (f)(5) of this section available on their Web site within six months of model introduction, or at the same time it is made available to manufacturer-franchised dealerships, whichever is earlier. After this six-month period, the information must be available and updated on the manufacturer Web site at the same time that the updated information is made available to manufacturer-franchised dealerships, except as otherwise specified in this section.

(ii) *Archived information*. Manufacturers must maintain the required information on their Web sites in full-text as defined in paragraph (f)(5) of this section for a minimum of 15 years after model introduction. Subsequent to this fifteen year period, manufacturers may archive the information in the manufacturer's format of choice and provide an index of the archived information on the manufacturer Web site and how it can be obtained by interested parties. Manufacturers shall index their available information with a title that adequately describes the contents of the document to which it refers. Manufacturers may allow for the ordering of information directly from their Web site, or from a Web site hyperlinked to the manufacturer Web site. In the alternative, manufacturers shall list a phone number and address where aftermarket service providers can call or write to obtain the desired information. Manufacturers must also provide the price of each item listed, as well as

the price of items ordered on a subscription basis. To the extent that any additional information is added or changed for these model years, manufacturers shall update the index as appropriate. Manufacturers will be responsible for ensuring that all information, including information that is distributed through information distributors, is provided within one regular business day of receiving the order. Items that are less than 20 pages (e.g. technical service bulletins) shall be faxed, if requested, to the requestor and distributors are required to deliver the information overnight if requested and paid for by the ordering party. Archived information must be made available on demand and at a fair and reasonable price.

(12) *Reprogramming information.* (i) Manufacturers shall make available to the persons specified in paragraph (f)(2)(i) of this section all emissions-related recalibration or reprogramming events (including driveability reprogramming events that may affect emissions) in the format of its choice at the same time they are made available to manufacturer-franchised dealerships. This requirement takes effect on September 25, 2003, and within 3 months of model introduction for all new model years.

(ii) Manufacturers shall provide persons specified in paragraph (f)(2)(i) of this section with an efficient and cost-effective method for identifying whether the calibrations on vehicles are the latest to be issued. This requirement takes effect on September 25, 2003, and within 3 months of model introduction for all new model years.

(iii) For all 2004 and later OBD vehicles equipped with reprogramming capability, manufacturers shall comply with SAE J2534 (Incorporated by reference, see § 86.1). Any manufacturer who cannot comply with SAE J2534 in model year 2004 may request one year additional lead time from the Administrator.

(iv) For model years 2004 and later, manufacturers shall make available to aftermarket service providers the necessary manufacturer-specific software applications and calibrations needed to initiate pass-through reprogramming. This software shall be able to run on a standard personal computer that utilizes standard operating systems as specified in SAE J2534 (Incorporated by reference, see § 86.1).

(v) For model years prior to 2004, manufacturers may use SAE J2534 as described above, provided they make available to the aftermarket any additional required hardware (i.e., cables). Manufacturers may not require the purchase or use of a manufacturer-specific scan tool to receive or use this additional hardware. Manufacturers must also make available the necessary manufacturer-specific software applications and calibrations needed to initiate pass-through reprogramming. Manufacturers must also make available to equipment and tool companies any information needed to develop aftermarket equivalents of the manufacturer-specific hardware.

(vi) Manufacturers may take any reasonable business precautions necessary to protect proprietary business information and are not required to provide this information to any party that does not agree to these reasonable business precautions. The requirement to make hardware available and to release the information to equipment and tool companies takes effect on September 25, 2003, and within 3 months of model introduction for all new model years.

(vii) Manufacturers who cannot comply with paragraphs (f)(12)(v) and (f)(12)(vi) of this section shall make available to equipment and tool companies by September 25, 2003 the following information necessary for reprogramming the ECU:

(A) The physical hardware requirements for reprogramming events or tools (e.g. system voltage requirements, cable terminals/pins, connections such as RS232 or USB, wires, etc.).

(B) ECU data communication (e.g. serial data protocols, transmission speed or baud rate, bit timing requirements, etc.).

(C) Information on the application physical interface (API) or layers (descriptions for procedures such as connection, initialization, performing and verifying programming/download, and termination).

(D) Vehicle application information or any other related service information such as special pins and voltages for reprogramming events or additional vehicle connectors that require enablement and specifications for the enablement.

(E) Information that describes what interfaces or combinations of interfaces are used to deliver calibrations from database media (e.g. PC using CDROM to the reprogramming device e.g. scan tool or black box).

(viii) A manufacturer can propose an alternative to the requirements of paragraph (f)(12)(vii) of this section for how aftermarket service providers can reprogram an ECU. The Administrator will approve this alternative if the manufacturer demonstrates all of the following:

(A) That it cannot comply with paragraph (f)(12)(v) of this section for the vehicles subject to the alternative plan;

(B) That a very small percentage of its vehicles in model years prior to 2004 cannot be reprogrammed with the provisions described in paragraph (f)(12)(v) of this section, or that releasing the information to tool companies would likely not result in this information being incorporated into aftermarket tools; and

(C) That aftermarket service providers will be able to reprogram promptly at a reasonable cost.

(ix) In meeting the requirements of paragraphs (f)(12)(v) through (f)(12)(vii) of this section, manufacturers may take any reasonable business precautions necessary to protect proprietary business information and are not required to provide this information to any party that does not agree to these reasonable business precautions.

(13) *Generic and enhanced information for scan tools.* Manufacturers shall make available to equipment and tool companies all generic and enhanced service information including bi-directional control and data stream information as defined in paragraph (f)(2)(ii) of this section. This requirement applies for 1996 and later model year vehicles.

(i) The information required by this paragraph (f)(13) of this section shall be provided electronically using common document formats to equipment and tool companies with whom they have appropriate licensing, contractual, and/or confidentiality arrangements. To the extent that a central repository for this information (e.g. the TEK-NET library developed by the Equipment and Tool Institute) is used to warehouse this information, the Administrator shall have free unrestricted access. In addition, information required by paragraph (f)(13) of this section shall be made available to equipment and tool companies who are not otherwise members of any central repository and shall have access if the non-members have arranged for the appropriate licensing, contractual and/or confidentiality arrangements with the manufacturer and/or a central repository.

(ii) In addition to the generic and enhanced information defined in paragraph (f)(2)(ii) of this section, manufacturers shall also make available the following information necessary for developing generic diagnostic scan tools:

(A) The physical hardware requirements for data communication (e.g. system voltage requirements, cable terminals/pins, connections such as RS232 or USB, wires, etc.)

(B) ECU data communication (e.g. serial data protocols, transmission speed or baud rate, bit timing requirements, etc.),

(C) Information on the application physical interface (API) or layers. (i.e., processing algorithms or software design descriptions for procedures such as connection, initialization, and termination),

(D) Vehicle application information or any other related service information such as special pins and voltages or additional vehicle connectors that require enablement and specifications for the enablement.

(iii) Any manufacturer who utilizes an automated process in its manufacturer-specific scan tool for diagnostic fault trees shall make available to equipment and tool companies the data schema, detail specifications, including category types/codes and vehicle codes, and data format/content structure of the diagnostic trouble trees.

(iv) Manufacturers can satisfy the requirement of paragraph (f)(13)(iii) of

this section by making available diagnostic trouble trees on their Web sites in full text.

(14) *Availability of manufacturer-specific scan tools.* Manufacturers shall make available for sale to the persons specified in paragraph (f)(2)(i) of this section their own manufacturer-specific diagnostic tools at a fair and reasonable cost. These tools shall also be made available in a timely fashion either through the manufacturer Web site or through a manufacturer-designated intermediary. Manufacturers who develop different versions of one or more of their diagnostic tools that are used in whole or in part for emission-related diagnosis and repair shall insure that all emission-related diagnosis and repair information is available for sale to the aftermarket at a fair and reasonable cost. Manufacturers shall provide technical support to aftermarket service providers for the tools described in this section, either themselves or through a third party of its choice. Factors for determining fair and reasonable cost include, but are not limited to:

(i) The net cost to the manufacturer's franchised dealerships for similar tools obtained from manufacturers, less any discounts, rebates, or other incentive programs;

(ii) The cost to the manufacturer for preparing and distributing the tools, excluding any research and development costs;

(iii) The price charged by other manufacturers of similar sizes for similar tools;

(iv) The capabilities and functionality of the manufacturer tool;

(v) The means by which the tools are distributed;

(vi) Inflation;

(vii) The ability of aftermarket technicians and shops to afford the tools.

(15) *Changing content of manufacturer-specific scan tools.* Manufacturers who opt to remove non-emissions related content from their manufacturer-specific scan tools and sell them to the persons specified in paragraph (f)(2)(i) of this section shall adjust the cost of the tool accordingly lower to reflect the decreased value of the scan tool. All emissions-related content that remains in the manufacturer-specific tool shall be identical to the information that is contained in the complete version of the manufacturer specific tool. Any manufacturer who wishes to implement this option must request approval from the Administrator prior to the introduction of the tool into commerce.

(16) *Special tools.* (i) Manufacturers who have developed special tools to extinguish the malfunction indicator light (MIL) for Model Years 1994 through 2003 shall make available the necessary information to equipment and tool companies to design a comparable generic tool.

(ii) Manufacturers are prohibited from requiring special tools to extinguish the malfunction indicator light (MIL) beginning with Model Year 2004.

(17) *Reference materials.* Manufacturers shall conform with the following Society of Automotive Engineers (SAE) standards.

(i) For Web-based delivery of service information, manufacturers shall comply with SAE Recommended Practice J1930 (Revised, May 1998), ''Electrical/Electronic Systems Diagnostic Terms, Definitions, Abbreviations, and Acronyms'' (Incorporated by reference, see § 86.1). This recommended practice standardizes various terms, abbreviations, and acronyms associated with on-board diagnostics. Manufacturers shall comply with SAE J1930 (Incorporated by reference, see § 86.1) beginning with Model Year 2004.

(ii) For identification and scaling information necessary to interpret and understand data available to a generic scan tool through ''mode 6'', manufacturers shall comply with SAE Recommended Practice J1979 (Revised, September, 1997), ''EE Diagnostic Test Modes'' (Incorporated by reference, see § 86.1). This recommended practice describes the implementation of the diagnostic test modes for emissions-related test data. Manufacturers shall comply with SAE J1979 beginning with Model Year 2004.

(iii) For allowing ECU and equipment and tool manufacturers to satisfy the needs of multiple end users with minimum modification to a basic ECU design, manufacturers shall comply with SAE Recommended Practice J2284–3 (May, 2001), ''High Speed CAN (HSC) for

Vehicle Applications at 500 KBPS'' (Incorporated by reference, see § 86.1). SAE J2284–3 establishes standard ECU physical layer, data link layer, and media design criteria. Manufacturers may comply with SAE J2284–3 beginning with model year 2003 and shall comply with SAE J2284–3 beginning with model year 2008.

(iv) For pass-through reprogramming capabilities, manufacturers shall comply with SAE Recommended Practice J2534 (February, 2002), ''Recommended Practice for Pass-Thru Vehicle Programming'' (Incorporated by reference, see § 86.1). This recommended practice provides technical specifications and information that manufacturers must supply to equipment and tool companies to develop aftermarket pass-through reprogramming tools. Manufacturers shall comply with SAE J2534 beginning with model year 2004.

(18) *Reporting requirements.* Manufacturers shall provide to the Administrator reports on an annual basis within 30 days of the end of the calendar year and upon request of the Administrator, that describe the performance of their individual Web sites. These annual reports shall be submitted to the Administrator electronically utilizing non-proprietary software in the format as agreed to by the Administrator and the manufacturers. Manufacturers may request Administrator approval to report on parameters other than those described below if the manufacturer can demonstrate that those alternate parameters will provide sufficient and similar information for the Administrator to effectively evaluate the manufacturer Web site. These annual reports shall include, at a minimum, monthly measurements of the following parameters:

(i) Total successful requests (measured in number of files including graphic interchange formats (GIFs) and joint photographic expert group (JPEG) images, i.e. electronic images such as wiring or other diagrams or pictures). This is defined as the total successful request counts of all the files which have been requested, including pages, graphics, etc.

(ii) Total failed requests (measured in number of files). This is defined as the total failed request counts of all the files which were requested but failed because they could not be found or were read-protected. This includes pages, graphics, etc.

(iii) Average data transferred per day (measured by bytes). This is defined as average amount of data transferred per day from one place to another.

(iv) Daily Summary (measured in number of files/pages by day of week). This is defined as the total number of requests each day of the week, over the time period given at the beginning of the report.

(v) Daily report (measured in number of files/pages by the day of the month). This is defined as how many requests there were in each day of a specific month.

(vi) Browser Summary (measured in number of files/pages by browser type, i.e., Netscape, Internet Explorer). This is defined as the versions of a browser by vendor.

(vii) Any other information deemed necessary by the Administrator to determine the adequacy of a manufacturer Web site.

(19) *Prohibited Acts, Liability and Remedies.* (i) It is a prohibited act for any person to fail to promptly provide or cause a failure to promptly provide information as required by this paragraph (f), or to otherwise fail to comply or cause a failure to comply with any provision of this paragraph (f).

(ii) Any person who fails or causes the failure to comply with any provision of this paragraph (f) is liable for a violation of that provision. A corporation is presumed liable for any violations of this subpart that are committed by any of its subsidiaries, affiliates or parents that are substantially owned by it or substantially under its control.

(iii) Any person who violates a provision of this paragraph (f) shall be subject to a civil penalty of not more than $32,500 per day for each violation. This maximum penalty is shown for calendar year 2004. Maximum penalty limits for later years may be set higher based on the Consumer Price Index, as specified in 40 CFR part 19. In addition, such person shall be liable for all other remedies set forth in Title II of the Clean Air Act, remedies pertaining to provisions of Title II of the Clean Air

Act, or other applicable provisions of law.

(g) Through model year 2013, the manufacturer shall furnish or cause to be furnished to the purchaser the following statement for each new diesel-fueled Tier 2 vehicle (certified using a test fuel with 15 ppm sulfur or less): ''This vehicle must be operated only with ultra low sulfur diesel fuel (that is, diesel fuel meeting EPA specifications for highway diesel fuel, including a 15 ppm sulfur cap).''

[64 FR 23925, May 4, 1999, as amended at 68 FR 38455, June 27, 2003; 70 FR 40442, July 13, 2005; 79 FR 23711, Apr. 28, 2014]

§ 86.1809–01 Prohibition of defeat devices.

(a) No new light-duty vehicle, light-duty truck, or complete heavy-duty vehicle shall be equipped with a defeat device.

(b) The Administrator may test or require testing on any vehicle at a designated location, using driving cycles and conditions which may reasonably be expected to be encountered in normal operation and use, for the purposes of investigating a potential defeat device.

(c) For cold temperature CO emission control, the Administrator will use a guideline to determine the appropriateness of the CO emission control at ambient temperatures between 25 deg. F (−4 deg. C) and 68 deg. F (20 deg. C). The guideline for CO emission congruity across the intermediate temperature range is the linear interpolation between the CO standard applicable at 25 deg. F (−4 deg. C) and the CO standard applicable at 68 deg. F (20 deg. C). For vehicles that exceed this CO emissions guideline upon intermediate temperature cold testing:

(1) If the CO emission level is greater than the 20 deg. F (−7 deg. C) emission standard, the vehicle will automatically be considered to be equipped with a defeat device without further investigation.

(2) If the CO emission level does not exceed the 20 deg. F emission standard, the Administrator may investigate the vehicle design for the presence of a defeat device under paragraph (d) of this section.

(d) For vehicle designs designated by the Administrator to be investigated for possible defeat devices:

(1) The manufacturer must show to the satisfaction of the Administrator that the vehicle design does not incorporate strategies that unnecessarily reduce emission control effectiveness exhibited during the Federal or Supplemental Federal emissions test procedures (FTP or SFTP) when the vehicle is operated under conditions which may reasonably be expected to be encountered in normal operation and use.

(2) Information requirements:

(i) Upon request by the Administrator, the manufacturer will provide an explanation containing detailed information regarding test programs, engineering evaluations, design specifications, calibrations, on-board computer algorithms, and design strategies incorporated for operation both during and outside of the Federal emission test procedure.

(ii) For purposes of investigations of possible cold temperature CO defeat devices under this paragraph (d), the manufacturer shall provide an explanation which must show, to the satisfaction of the Administrator, that CO emissions are reasonably controlled in reference to the linear guideline, across the intermediate temperature range.

(e) For each test group of Tier 2 LDV/LLDTs and HLDT/MDPVs and interim non-Tier 2 LDV/LLDTs and HLDT/MDPVs the manufacturer must submit, with the Part II certification application, an engineering evaluation demonstrating to the satisfaction of the Administrator that a discontinuity in emissions of non-methane organic gases, carbon monoxide, oxides of nitrogen and formaldehyde measured on the Federal Test Procedure (subpart B of this part) does not occur in the temperature range of 20 to 86 degrees F. For diesel vehicles, the engineering evaluation must also include particulate emissions.

[64 FR 23925, May 4, 1999, as amended at 65 FR 6853, Feb. 10, 2000; 65 FR 59969, Oct. 6, 2000]

§ 86.1809–10 Prohibition of defeat devices.

(a) No new light-duty vehicle, light-duty truck, medium-duty passenger vehicle, or complete heavy-duty vehicle shall be equipped with a defeat device.

(b) The Administrator may test or require testing on any vehicle at a designated location, using driving cycles and conditions that may reasonably be expected to be encountered in normal operation and use, for the purposes of investigating a potential defeat device.

(c) For cold temperature CO and cold temperature NMHC emission control, the Administrator will use a guideline to determine the appropriateness of the CO and NMHC emission control at ambient temperatures between 25 °F (the upper bound of the temperatue test range) and 68 °F (the lower bound of the FTP range). The guideline for CO emission congruity across the intermediate temperature range is the linear interpolation between the CO standard applicable at 25 °F and the CO standard applicable at 68 °F. The guideline for NMHC emission congruity across the intermediate temperature range is the linear interpolation between the NMHC FEL pass limit (e.g. 0.3499 g/mi for a 0.3 g/mi FEL) applicable at 20 °F and the Tier 2 NMOG standard to which the vehicle was certified at 68 °F, where the intermediate temperature NMHC level is rounded to the nearest hundredth for comparison to the interpolated line. For vehicles that exceed this CO emissions guideline or this NMHC emissions guideline upon intermediate temperature cold testing:

(1) If the CO emission level is greater than the 20 °F emission standard, the vehicle will automatically be considered to be equipped with a defeat device without further investigation. If the intermediate temperature NMHC emission level, rounded to the nearest hundredth, is greater than the 20 °F FEL pass limit, the vehicle will be presumed to have a defeat device unless the manufacturer provides evidence to EPA's satisfaction that the cause of the test result in question is not due to a defeat device.

(2) If the CO emission level does not exceed the 20 °F emission standard, the Administrator may investigate the vehicle design for the presence of a defeat device under paragraph (d) of this section. If the intermediate temperature NMHC emission level, rounded to the nearest hundredth, does not exceed the 20 °F FEL pass limit the Administrator may investigate the vehicle design for the presence of a defeat device under paragraph (d) of this section.

(d) The following provisions apply for vehicle designs designated by the Administrator to be investigated for possible defeat devices:

(1) The manufacturer must show to the satisfaction of the Administrator that the vehicle design does not incorporate strategies that unnecessarily reduce emission control effectiveness exhibited during the Federal Test Procedure or Supplemental Federal Test Procedure (FTP or SFTP) when the vehicle is operated under conditions that may reasonably be expected to be encountered in normal operation and use.

(2) The following information requirements apply:

(i) Upon request by the Administrator, the manufacturer must provide an explanation containing detailed information regarding test programs, engineering evaluations, design specifications, calibrations, on-board computer algorithms, and design strategies incorporated for operation both during and outside of the Federal emission test procedure.

(ii) For purposes of investigations of possible cold temperature CO or cold temperature NMHC defeat devices under this paragraph (d), the manufacturer must provide an explanation to show, to the satisfaction of the Administrator, that CO emissions and NMHC emissions are reasonably controlled in reference to the linear guideline across the intermediate temperature range.

(e) For each test group of Tier 2 LDV/LLDTs and HLDT/MDPVs and interim non-Tier 2 LDV/LLDTs and HLDT/MDPVs the manufacturer must submit, with the Part II certification application, an engineering evaluation demonstrating to the satisfaction of the Administrator that a discontinuity in emissions of non-methane organic gases, carbon monoxide, oxides of nitrogen and formaldehyde measured on the Federal Test Procedure (subpart B of this part) does not occur in the temperature range of 20 to 86 °F. For diesel

vehicles, the engineering evaluation must also include particulate emissions.

[72 FR 8561, Feb. 26, 2007]

§ 86.1809–12 Prohibition of defeat devices.

(a) No new light-duty vehicle, light-duty truck, medium-duty passenger vehicle, or complete heavy-duty vehicle shall be equipped with a defeat device.

(b) The Administrator may test or require testing on any vehicle at a designated location, using driving cycles and conditions that may reasonably be expected to be encountered in normal operation and use, for the purposes of investigating a potential defeat device.

(c) For cold temperature CO and cold temperature NMHC emission control, the Administrator will use a guideline to determine the appropriateness of the CO and NMHC emission control at ambient temperatures between 25 °F (the upper bound of the FTP test temperature range) and 68 °F (the lower bound of the FTP test temperature range). The guideline for CO emission congruity across the intermediate temperature range is the linear interpolation between the CO standard applicable at 25 °F and the CO standard applicable at 68 °F. The guideline for NMHC emission congruity across the intermediate temperature range is the linear interpolation between the NMHC FEL pass limit (e.g., 0.3499 g/mi for a 0.3 g/mi FEL) applicable at 20 °F and the Tier 2 NMOG standard or the Tier 3 NMOG + NO_X bin standard to which the vehicle was certified at 68 °F, where the intermediate temperature NMHC level is rounded to the nearest hundredth for comparison to the interpolated line. For vehicles that exceed this CO emissions guideline or this NMHC emissions guideline upon intermediate temperature testing:

(1) If the CO emission level is greater than the 20 °F emission standard, the vehicle will automatically be considered to be equipped with a defeat device without further investigation. If the intermediate temperature NMHC emission level, rounded to the nearest hundredth, is greater than the 20 °F FEL pass limit, the vehicle will be presumed to have a defeat device unless the manufacturer provides evidence to EPA's satisfaction that the cause of the test result in question is not due to a defeat device.

(2) If the CO emission level does not exceed the 20 °F emission standard, the Administrator may investigate the vehicle design for the presence of a defeat device under paragraph (d) of this section. If the intermediate temperature NMHC emission level, rounded to the nearest hundredth, does not exceed the 20 °F FEL pass limit the Administrator may investigate the vehicle design for the presence of a defeat device under paragraph (d) of this section.

(d) The following provisions apply for vehicle designs designated by the Administrator to be investigated for possible defeat devices:

(1) The manufacturer must show to the satisfaction of the Administrator that the vehicle design does not incorporate strategies that unnecessarily reduce emission control effectiveness exhibited during the Federal Test Procedure or Supplemental Federal Test Procedure (FTP or SFTP) or the Highway Fuel Economy Test Procedure (described in subpart B of 40 CFR part 600), or the Air Conditioning Idle Test (described in § 86.165–12), when the vehicle is operated under conditions that may reasonably be expected to be encountered in normal operation and use.

(2) The following information requirements apply:

(i) Upon request by the Administrator, the manufacturer must provide an explanation containing detailed information regarding test programs, engineering evaluations, design specifications, calibrations, on-board computer algorithms, and design strategies incorporated for operation both during and outside of the Federal emission test procedures.

(ii) For purposes of investigations of possible cold temperature CO or cold temperature NMHC defeat devices under this paragraph (d), the manufacturer must provide an explanation to show, to the satisfaction of the Administrator, that CO emissions and NMHC emissions are reasonably controlled in reference to the linear guideline across the intermediate temperature range.

(e) For each test group the manufacturer must submit, with the Part II

certification application, an engineering evaluation demonstrating to the satisfaction of the Administrator that a discontinuity in emissions of nonmethane organic gases, carbon monoxide, carbon dioxide, oxides of nitrogen, nitrous oxide, methane, and formaldehyde measured on the Federal Test Procedure (subpart B of this part) and on the Highway Fuel Economy Test Procedure (subpart B of 40 CFR part 600) does not occur in the temperature range of 20 to 86 °F. For diesel vehicles, the engineering evaluation must also include particulate emissions.

[75 FR 25685, May 7, 2010, as amended at 79 FR 23712, Apr. 28, 2014]

§ 86.1810–01 General standards; increase in emissions; unsafe conditions; waivers.

This section applies to model year 2001 and later light-duty vehicles and light-duty trucks fueled by gasoline, diesel, methanol, natural gas and liquefied petroleum gas fuels. This section also applies to MDPVs and complete heavy-duty vehicles certified according to the provisions of this subpart. Multi-fueled vehicles (including dual-fueled and flexible-fueled vehicles) shall comply with all requirements established for each consumed fuel (or blend of fuels in the case of flexible fueled vehicles). The standards of this subpart apply to both certification and in-use vehicles unless otherwise indicated. For Tier 2 and interim non-Tier 2 vehicles, this section also applies to hybrid electric vehicles and zero emission vehicles. Unless otherwise specified, requirements and provisions of this subpart applicable to methanol fueled vehicles are also applicable to Tier 2 and interim non-Tier 2 ethanol fueled vehicles.

(a) Any device, system or element of design installed on or incorporated in a new motor vehicle to enable such vehicle to conform to the standards imposed by this subpart:

(1) Shall not in its operation or function cause the emission into the ambient air of any noxious or toxic substance that would not be emitted in the operation of such vehicle without such system, except as specifically permitted by regulation; and

(2) Shall not in its operation, function or malfunction result in any unsafe condition endangering the vehicle, its occupants, or persons or property in close proximity to the vehicle.

(b) In establishing the physically adjustable range of each adjustable parameter on a new motor vehicle, the manufacturer shall ensure that, taking into consideration the production tolerances, safe vehicle drive ability characteristics are available within that range, as required by section 202(a)(4) of the Clean Air Act.

(c) Every manufacturer of new motor vehicles subject to any of the standards imposed by this subpart shall, prior to taking any of the actions specified in section 203(a)(1) of the Act, test or cause to be tested motor vehicles (or motor vehicle engines) in accordance with good engineering judgment to ascertain that such test vehicles will meet the requirements of this section for the useful life of the vehicle.

(d) *Crankcase emissions prohibited*. No crankcase emissions shall be discharged into the ambient atmosphere from any 2001 and later model year light-duty vehicle, light-duty truck, or complete heavy-duty vehicle certified according to the provisions of this subpart.

(e) *On-board diagnostics*. All light-duty vehicles, light-duty trucks and complete heavy-duty vehicles must have an on-board diagnostic system as described in § 86.1806–01 or § 86.1806–04, as applicable.

(f) *Altitude requirements*. Unless otherwise specified, emission standards apply at low-altitude conditions and at high-altitude conditions. The following exceptions apply:

(1) The supplemental exhaust emission standards as described in § 86.1811–04(f) apply only at low-altitude conditions;

(2) The cold temperature NMHC emission standards as described in § 86.1811–10(g) apply only at low-altitude conditions;

(3) The evaporative emission standards specified in § 86.1811–09(e) apply at low-altitude conditions. The evaporative emission standards specified in § 86.1811–04(e) continue to apply at high-altitude conditions for 2009 and later model year vehicles.

(g) The standards set forth in this part refer to test procedures set forth in subparts B, C, O and P of this part.

(h) For methanol-fueled and natural gas-fueled vehicles, hydrocarbon standards refer to hydrocarbon equivalents and nonmethane hydrocarbon standards refer to nonmethane hydrocarbon equivalents.

(i) *Supplemental FTP general provisions.* (1) Implementation schedules. A minimum of the percentage of a manufacturer's model year sales of light-duty vehicles or light light-duty trucks (considered independently) shown in Table S01–1 and heavy light-duty trucks shown in Table S01–2 shall not exceed the applicable SFTP standards found in paragraph (b) of §§ 86.1811–01, 1812–01, 1813–01, 1814–02, and 1815–02 when tested under the applicable procedures in subpart B of this part. Tables S01–1 and S01–2 follow:

TABLE S01–1—SFTP IMPLEMENTATION SCHEDULE FOR LIGHT-DUTY VEHICLES AND LIGHT LIGHT-DUTY TRUCKS

Model year	Percentage
2000	40
2001	80
2002	100

TABLE S01–2—SFTP IMPLEMENTATION SCHEDULE FOR HEAVY LIGHT-DUTY TRUCKS

Model year	Percentage
2002	40
2003	80
2004	100

(2) Optionally, a minimum of the percentage shown in Table S01–1 of a manufacturer's combined sales of the applicable model year's light-duty vehicles and light light-duty trucks shall not exceed the applicable SFTP standards. Under this option, the light-duty vehicles shall not exceed the applicable SFTP standards in § 86.1811–01(b), and the light light-duty trucks shall not exceed the applicable SFTP standards in § 86.1812–01(b) or § 86.1813–01(b) as applicable.

(3) Sales percentages for the purposes of determining compliance with the applicable SFTP emission standards shall be based on total actual U.S. sales of light-duty vehicles of the applicable model year by a manufacturer to a dealer, distributor, fleet operator, broker, or any other entity which comprises the point of first sale. If the option of paragraph (i)(2) of this section is taken, such sales percentages shall be based on the total actual combined U.S. sales of light-duty vehicles and light light-duty trucks of the applicable model year by a manufacturer to a dealer, distributor, fleet operator, broker, or any other entity which comprises the point of first sale.

(4) The SFTP standards do not apply to vehicles or trucks certified on alternative fuels, but the standards do apply to the gasoline and diesel fuel operation of flexible fuel vehicles and trucks and dual fuel vehicles and trucks.

(5) The SFTP standards do not apply to vehicles or trucks tested at high altitude.

(6) The air to fuel ratio shall not be richer at any time than the leanest air to fuel mixture required to obtain maximum torque (lean best torque), plus a tolerance of six percent. The Administrator may approve a manufacturer's request for additional enrichment if it can be shown that additional enrichment is needed to protect the engine or emissions control hardware. For Tier 2 and interim non-Tier 2 vehicles, this provision does not apply to enrichment that occurs upon cold start, warm-up conditions and rapid-throttle motion conditions (''tip-in'' or ''tip-out'' conditions).

(7) The requirement to use a single roll dynamometer (or a dynamometer which produces equivalent results), discussed in §§ 86.108–00, 86.118–00, and 86.129–00 of subpart B of this part, applies to all SFTP and FTP test elements as set forth in subpart B of this part for test groups which are designated as SFTP compliant under the implementation schedules in Tables S01–1 and S01–2 in paragraph (i)(1) of this section.

(8) Small volume provisions. (i) Light-duty vehicles and light light-duty trucks manufactured by small volume manufacturers, as described in § 86.1801–01(d), are exempt from the requirements of this paragraph until model year 2002, when 100 percent compliance with the provisions of this paragraph (i) and the SFTP standards

in §§ 86.1811–01(b) and 86.1812–01(b) is required. This exemption does not apply to small volume test groups as defined in § 86.1838–01(b)(2).

(ii) Heavy light-duty trucks manufactured by small volume manufacturers, as defined in § 86.1801–01, are exempt from the requirements of this paragraph (i) until model year 2004 when 100 percent compliance with the provisions of this paragraph and the SFTP standards in §§ 86.1814–02(b) and 86.1815–02(b) is required. This exemption does not apply to small volume test groups as defined in § 86.1838–01(b)(2).

(9) [Reserved]

(10) The manufacturer must state at the time of Application for Certification, based on projected U.S. sales or projected production for U.S. sale, which test groups will be used to attain the required implementation schedule sales percentages for certification purposes.

(11) A manufacturer cannot use one set of test groups to meet its intermediate useful life standards and another to meet its full useful life standards. The same test groups which are used to meet the intermediate useful life standards will be required to meet the corresponding full useful life standards.

(12) Compliance with composite standards shall be demonstrated using the calculations set forth in § 86.164–00.

(13) *A/C-on specific calibrations.* (i) For Tier 2 and interim non-Tier 2 vehicles, A/C-on specific calibrations (e.g. air to fuel ratio, spark timing, and exhaust gas recirculation), may be used which differ from A/C-off calibrations for given engine operating conditions (e.g., engine speed, manifold pressure, coolant temperature, air charge temperature, and any other parameters).

(ii) Such calibrations must not unnecessarily reduce the NMHC + NO_X emission control effectiveness during A/C-on operation when the vehicle is operated under conditions which may reasonably be expected to be encountered during normal operation and use.

(iii) If reductions in control system NMHC + NO_X effectiveness do occur as a result of such calibrations, the manufacturer must, in the Application for Certification, specify the circumstances under which such reductions do occur, and the reason for the use of such calibrations resulting in such reductions in control system effectiveness.

(iv) A/C-on specific ''open-loop'' or ''commanded enrichment'' air-fuel enrichment strategies (as defined below), which differ from A/C-off ''open-loop'' or ''commanded enrichment'' air-fuel enrichment strategies, may not be used, with the following exceptions: Cold-start and warm-up conditions, or, subject to Administrator approval, conditions requiring the protection of the vehicle, occupants, engine, or emission control hardware. Other than these exceptions, such strategies which are invoked based on manifold pressure, engine speed, throttle position, or other engine parameters must use the same engine parameter criteria for the invoking of this air-fuel enrichment strategy and the same degree of enrichment regardless of whether the A/C is on or off. ''Open-loop'' or ''commanded'' air-fuel enrichment strategy is defined as enrichment of the air to fuel ratio beyond stoichiometry for the purposes of increasing engine power output and the protection of engine or emissions control hardware. However, ''closed-loop biasing,'' defined as small changes in the air-fuel ratio for the purposes of optimizing vehicle emissions or driveability, must not be considered an ''open-loop'' or ''commanded'' air-fuel enrichment strategy. In addition, ''transient'' air-fuel enrichment strategy (or ''tip-in'' and ''tip-out'' enrichment), defined as the temporary use of an air-fuel ratio rich of stoichiometry at the beginning or duration of rapid throttle motion, must not be considered an ''open-loop'' or ''commanded'' air-fuel enrichment strategy.

(14) ''*Lean-on-cruise*'' *calibration strategies.* (i) For Tier 2 and interim non-Tier 2 vehicles, the manufacturer must state in the Application for Certification whether any ''lean-on-cruise'' strategies are incorporated into the vehicle design. A ''lean-on-cruise'' air-fuel calibration strategy is defined as the use of an air-fuel ratio significantly greater than stoichiometry, during non-deceleration conditions at speeds above 40 mph. ''Lean-on-cruise'' air-fuel calibration strategies must not

be employed during vehicle operation in normal driving conditions, including A/C usage, unless at least one of the following conditions is met:

(A) Such strategies are substantially employed during the FTP or SFTP;

(B) Such strategies are demonstrated not to significantly reduce vehicle NMHC + NO_X emission control effectiveness over the operating conditions in which they are employed; or

(C) Such strategies are demonstrated to be necessary to protect the vehicle occupants, engine, or emission control hardware.

(ii) If the manufacturer proposes to use a ''lean-on-cruise'' calibration strategy, the manufacturer must specify the circumstances under which such a calibration would be used, and the reason or reasons for the proposed use of such a calibration.

(j) *Evaporative emissions general provisions.* (1) The evaporative standards in §§ 86.1811–01(d), 86.1811–04(e), 86.1812–01(d), 86.1813–01(d), 86.1814–01(d), 86.1814–02(d), 86.1815–01(d), 1815–02(d) and 86.1816–04(d) apply equally to certification and in-use vehicles and trucks. The spitback standard also applies to newly assembled vehicles.

(2) For certification testing only, manufacturers may conduct testing to quantify a level of non-fuel background emissions for an individual test vehicle. Such a demonstration must include a description of the source(s) of emissions and an estimated decay rate. The demonstrated level of non-fuel background emissions may be subtracted from evaporative emission test results from certification vehicles if approved in advance by the Administrator.

(3) All fuel vapor generated in a gasoline- or methanol-fueled light-duty vehicle, light-duty truck, or complete heavy-duty vehicle during in-use operation shall be routed exclusively to the evaporative control system (e.g., either canister or engine purge.) The only exception to this requirement shall be for emergencies.

(4) For certification purposes, where the applicable California evaporative emission standard is as stringent or more stringent than the applicable federal evaporative emission standard, the Administrator may accept California certification test data indicating compliance with the California standard to demonstrate compliance with the appropriate federal certification evaporative emission standard. The Administrator may require the manufacturer to provide comparative test data which clearly demonstrates that a vehicle meeting the California evaporative standard (when tested under California test conditions/test procedures) will also meet the appropriate federal evaporative emission standard when tested under federal test conditions/test procedures described in this part 86.

(k) *Refueling emissions general provisions*—(1) *Implementation schedules.* (i) Tables S01–3, S01–4, and S01–5 in this paragraph (k)(1)(i) give the minimum percentage of a manufacturer's sales of the applicable model year's gasoline- and methanol-fueled Otto-cycle and petroleum-fueled and methanol-fueled diesel-cycle light-duty vehicles, light-duty trucks and complete heavy-duty vehicles which shall be tested under the applicable procedures in subpart B of this part, and shall not exceed the standards described in §§ 86.1811–01(e), 86.1811–04(e)(3), 86.1812–01(e), 86.1813–01(e), and 86.1816–04(e). Vehicles waived from the emission standards under the provisions of paragraphs (m) and (n) of this section shall not be counted in the calculation of the percentage of compliance. Either manufacturer sales or actual production intended for sale in the United States may be used to determine combined volume, at the manufacturers option. Tables S01–3, S01–4, and S01–5 follow:

TABLE S01–3—LIGHT-DUTY VEHICLES

Model year	Percentage
1998 [a]	40
1999 [a]	80
2000 [a]	100

[a] NOTE: This subpart prescribes standards for 2001 and later MY vehicles. However, the implementation phase-in periods prior to this date are included for ease of reference.

TABLE S01–4—LIGHT LIGHT-DUTY TRUCKS

Model year	Percentage
2001	40
2002	80
2003	100

TABLE S01–5—HEAVY LIGHT-DUTY TRUCKS

Model year	Percentage
2004	40
2005	80
2006	100

(ii) Either manufacturer sales or actual production intended for sale in the United States may be used to determine combined volume, at the manufacturers option.

(2) *Determining sales percentages.* Sales percentages for the purposes of determining compliance with the applicable refueling emission standards light-duty vehicles, light-duty trucks, medium-duty passenger vehicles, and complete heavy-duty vehicles shall be based on total actual U.S. sales of heavy light-duty trucks and complete heavy-duty vehicles of the applicable model year by a manufacturer to a dealer, distributor, fleet operator, broker, or any other entity which comprises the point of first sale.

(3) *Refueling receptacle requirements.* Compressed natural gas vehicles must meet the requirements for fueling connection devices as specified in § 86.1813–17(f)(1).

(l) *Fuel dispensing spitback testing waiver.* (1) Vehicles certified to the refueling emission standards set forth in §§ 86.1811–04(e), 86.1812–01(e), 86.1813–01(e), 86.1816–05(e) are not required to demonstrate compliance with the fuel dispensing spitback standard contained in that section provided that:

(i) The manufacturer certifies that the vehicle inherently meets the fuel dispensing spitback standard as part of compliance with the refueling emission standard; and

(ii) This certification is provided in writing and applies to the full useful life of the vehicle.

(2) EPA retains the authority to require testing to enforce compliance and to prevent noncompliance with the fuel dispensing spitback standard.

(m) [Reserved]

(n) *Fixed liquid level gauge waiver.* Liquefied petroleum gas-fueled vehicles which contain fixed liquid level gauges or other gauges or valves which can be opened to release fuel or fuel vapor during refueling, and which are being tested for refueling emissions, are not required to be tested with such gauges or valves open, as outlined in § 86.157–98(d)(2), provided the manufacturer can demonstrate, to the satisfaction of the Administrator, that such gauges or valves would not be opened during refueling in-use due to inaccessibility or other design features that would prevent or make it very unlikely that such gauges or valves could be opened.

(o) *NMOG determination procedures.* Measure NMOG emissions or determine NMOG emissions based on NMHC measurements using the procedures described in 40 CFR 1066.635. For Tier 2 and interim non-Tier 2 vehicles fueled by gasoline, manufacturers may instead measure NMHC and multiply the result by an adjustment factor of 1.04 before comparing with the NMOG standard to determine compliance with that standard.

[64 FR 23925, May 4, 1999, as amended at 65 FR 6853, Feb. 10, 2000; 65 FR 59969, Oct. 6, 2000; 66 FR 5190, Jan. 18, 2001; 66 FR 19309, Apr. 13, 2001; 70 FR 72928, Dec. 8, 2005; 76 FR 19874, Apr. 8, 2011; 79 FR 23712, Apr. 28, 2014; 80 FR 9104, Feb. 19, 2015]

§ 86.1810–09 General standards; increase in emissions; unsafe condition; waivers.

Section 86.1810–09 includes text that specifies requirements that differ from § 86.1810–01. Where a paragraph in § 86.1810–01 is identical and applicable to § 86.1810–09, this may be indicated by specifying the corresponding paragraph and the statement ''[Reserved]. For guidance see § 86.1810–01.'' Where a corresponding paragraph of § 86.1810–01 is not applicable, this is indicated by the statement ''[Reserved]'' This section applies to model year 2009 and later light-duty vehicles and light-duty trucks fueled by gasoline, diesel, methanol, ethanol, natural gas and liquefied petroleum gas fuels. This section also applies to MDPVs and complete heavy-duty vehicles certified according to the provisions of this subpart. Multi-fueled vehicles (including dual-fueled and flexible-fueled vehicles) must comply with all requirements established for each consumed fuel (or blend of fuels in the case of flexible fueled vehicles). The standards of this subpart apply to both certification and in-use vehicles

unless otherwise indicated. This section also applies to hybrid electric vehicles and zero emission vehicles. Unless otherwise specified, requirements and provisions of this subpart applicable to methanol fueled vehicles are also applicable to Tier 2 and interim non-Tier 2 ethanol fueled vehicles.

(a) through (e) [Reserved] For guidance see § 86.1810–01.

(f) *Altitude requirements.* (1) All emission standards apply at low altitude conditions and at high altitude conditions, with the following exceptions:

(i) The supplemental exhaust emission standards as described in § 86.1811–04(f) apply only at low altitude conditions;

(ii) The cold temperature NMHC emission standards as described in § 86.1811–10(g) apply only at low altitude conditions;

(iii) The evaporative emission standards specified in § 86.1811–09(e) apply at low altitude conditions. The evaporative emission standards specified in § 86.1811–04(e) continue to apply at high altitude conditions for 2009 and later model year vehicles.

(2) For vehicles that comply with the cold temperature NMHC standards described in § 86.1811–10(g) and the CO_2, N_2O, and CH_4 exhaust emission standards described in § 86.1818–12, manufacturers must submit an engineering evaluation indicating that common calibration approaches are utilized at high altitudes (except when there are specific high altitude calibration needs to deviate from low altitude emission control practices). Any deviation from low altitude emission control practices must be included in the auxiliary emission control device (AECD) descriptions submitted at certification. Any AECD specific to high altitude must require engineering emission data for EPA evaluation to quantify any emission impact and validity of the AECD.

(g) through (p) [Reserved] For guidance see § 86.1810–01.

[72 FR 8562, Feb. 26, 2007, as amended at 75 FR 25686, May 7, 2010; 76 FR 39521, July 6, 2011; 77 FR 63156, Oct. 15, 2012]

§ 86.1810–17 General requirements.

The following provisions apply to all vehicles certified under this subpart:

(a) Any device, system or element of design installed on or incorporated in a new motor vehicle to enable such vehicle to conform to the standards imposed by this subpart:

(1) Shall not in its operation or function cause the emission into the ambient air of any noxious or toxic substance that would not be emitted in the operation of such vehicle without such system, except as specifically permitted by regulation; and

(2) Shall not in its operation, function or malfunction result in any unsafe condition endangering the vehicle, its occupants, or persons or property in close proximity to the vehicle.

(b) In establishing the physically adjustable range of each adjustable parameter on a new motor vehicle, the manufacturer shall ensure that, taking into consideration the production tolerances, safe vehicle drivability characteristics are available within that range.

(c) Unless otherwise specified, the emission standards of this subpart apply equally for certification and for in-use vehicles throughout the specified useful-life period. Also, manufacturers must use good engineering judgment to determine that all of a vehicle's emission-related components are designed to operate properly throughout the specified useful-life period.

(d) Vehicles may not discharge crankcase emissions into the ambient atmosphere.

(e) All vehicles must have an onboard diagnostic system as described in § 86.1806.

(f) Emission standards apply at low-altitude conditions and at high-altitude conditions, except as noted in this subpart.

(g) The cold temperature CO and NMHC standards in this subpart refer to test procedures set forth in subpart C of this part and 40 CFR part 1066, subpart H. All other emission standards in this subpart rely on test procedures set forth in subpart B of this part. These procedures rely on the test specifications in 40 CFR parts 1065 and 1066 as described in subparts B and C of this part.

(h) Multi-fueled vehicles (including dual-fueled and flexible-fueled vehicles) must comply with all the requirements

established for each consumed fuel (and blend of fuels for flexible-fueled vehicles). The following specific provisions apply for flexible-fueled vehicles that operate on ethanol and gasoline:

(1) For criteria exhaust emissions, we may identify the worst-case fuel blend for testing in addition to what is required for gasoline-fueled vehicles. The worst-case fuel blend may be the fuel specified in 40 CFR 1065.725, or it may consist of a combination of the fuels specified in 40 CFR 1065.710(b) and 1065.725. We may waive testing with the worst-case blended fuel for US06 and/or SC03 duty cycles; if we waive only SC03 testing, substitute the SC03 emission result using the standard test fuel for gasoline-fueled vehicles to calculate composite SFTP emissions.

(2) For refueling emissions, we may identify the worst-case fuel blend for testing in addition to what is required for gasoline-fueled vehicles. The worst-case fuel blend may consist of a combination of the fuels specified in 40 CFR 1065.710(c) and 1065.725. This is generally expected to be a fuel blend with 10 percent ethanol and a nominal Dry Vapor Pressure Equivalent of 10 psi. You may prepare such a worst-case fuel blend by mixing it before dispensing into the vehicle's fuel tank, or by consecutively dispensing appropriate amounts of the two specified fuels into a fuel tank.

(3) No additional spitback or evaporative emission testing is required beyond the emission measurements with the gasoline test fuel specified in 40 CFR 1065.710.

(i) Where we specify requirements based on a percentage of total sales volume in a given model year, you may instead ask us to calculate the percentage based on production volumes instead of sales volumes.

[79 FR 23712, Apr. 28, 2014, as amended at 80 FR 9105, Feb. 19, 2015]

§ 86.1811–04 Emission standards for light-duty vehicles, light-duty trucks and medium-duty passenger vehicles.

(a) *Applicability*. (1) This section contains regulations implementing emission standards for all LDVs, LDTs and MDPVs. This section applies to 2004 and later model year LDVs, LDTs and MDPVs fueled by gasoline, diesel, methanol, ethanol, natural gas and liquefied petroleum gas fuels, except as noted. Additionally, this section contains provisions applicable to hybrid electric vehicles (HEVs) and zero emission vehicles (ZEVs). Multi-fueled vehicles must comply with all requirements established for each consumed fuel.

(2) This section also applies to LDVs, LDTs and MDPVs of model years prior to 2004, when manufacturers certify such vehicles to Tier 2 exhaust emission requirements to utilize alternate phase-in schedules, as allowed under paragraph (k)(6) of this section, and/or to earn early NO_X credits for use in complying with the Tier 2 fleet average NO_X standard which takes effect in the 2004 model year for LDV/LLDTs and 2008 for HLDT/MDPVs.

(3) Except where otherwise specified, this section applies instead of §§ 86.1811–01, 86.1812–01, 86.1813–01, 86.1814–01, 86.1814–02, 86.1815–01, and 86.1815–02.

(4) Except where otherwise specified, the provisions of this section apply equally to LDVs and all categories of LDTs, and to all MDPVs. Numerous provisions are applicable equally to HLDTs and MDPVs, as reflected by the term HLDT/MDPV. Numerous provisions apply equally to LDVs and LLDTs as reflected by the term LDV/LLDT.

(5) The exhaust emission standards and evaporative emission standards of this section apply equally to certification and in-use LDVs, LDTs and MDPVs, unless otherwise specified.

(b) *Test weight*. (1) Except as required in paragraphs (b)(2) and (b)(4) of this section, or permitted under paragraph (b)(3) of this section, emission testing of all LDVs, LDTs and MDPVs to determine compliance with any exhaust or evaporative emission standard set forth in this part must be on a loaded vehicle weight (LVW) basis, as that term is defined in this subpart.

(2) Interim non-Tier 2 HLDTs tested to Tier 1 SFTP standards, must be tested on an adjusted loaded vehicle weight (ALVW) basis, as that term is defined in this subpart, during the SC03 element of the SFTP.

(3) Except as required in paragraphs (b)(2) and (b)(4) of this section, interim

non-Tier 2 HLDT/MDPVs may be tested on an ALVW basis or an LVW basis to demonstrate compliance with any exhaust or evaporative emission standard set forth in this part.

(4) MDPVs certified to bin 11 standards from Tables S04–1 and –2 must be tested on an ALVW basis to demonstrate compliance with any exhaust emission standard set forth in this part.

(c) *Tier 2 FTP exhaust emission standards.* Exhaust emissions from Tier 2 vehicles must not exceed the standards in Table S04–1 of this section at full useful life when tested over the Federal Test Procedure (FTP) described in subpart B of this part. Exhaust emissions from Tier 2 vehicles must not exceed the standards in Table S04–2 of this section at intermediate useful life, if applicable, when tested over the FTP.

(1) For a given test group a manufacturer desires to certify to operate only on one fuel, the manufacturer must select a set of standards from the same bin (line or row) in Table S04–1 of this section for non-methane organic gases (NMOG), carbon monoxide (CO), oxides of nitrogen (NO_X), formaldehyde (HCHO) and particulate matter (PM). The manufacturer must certify the test group to meet those standards, subject to all the applicable provisions of this subpart. The manufacturer must also certify the test group to meet the intermediate useful life standards (if any) in Table S04–2 of this section having the same EPA bin reference number as the chosen full useful life standards.

(2) For a given test group of flexible-fueled, bi-fuel or dual fuel vehicles when operated on the alcohol or gaseous fuel they are designed to use, manufacturers must select a bin of standards from Table S04–1 of this section and the corresponding bin in Table S04–2, if any. When these flexible-fueled, bi-fuel or dual fuel vehicles are certified to operate on gasoline or diesel fuel, the manufacturer may choose to comply with the next numerically higher applicable NMOG standard, if any, above the bin which contains the standards selected for certification on the gaseous or alcohol fuel.

(3)(i) For a given test group of flexible-fueled, bi-fuel or dual fuel vehicles certified to bin 10 in Table S04–1, when operated on the alcohol or gaseous fuel they are designed to use, manufacturers may choose to comply with an NMOG standard of 0.230 for LDV/LLDTs or 0.280 g/mi for HLDT/MDPVs at full useful life and corresponding intermediate life standards of 0.160 g/mi and 0.195 g/mi, respectively, when these flexible-fueled, bi-fuel or dual fuel vehicles are certified to operate on gasoline or diesel fuel.

(ii) For a given test group of flexible-fueled, bi-fuel or dual fuel vehicles certified to bin 8 in Table S04–1, when operated on the alcohol or gaseous fuel they are designed to use, manufacturers may choose to comply with a NMOG standard of 0.156 g/mi for LDV/LLDTs and 0.180 for HLDT/MDPVs at full useful life and corresponding intermediate life standards of 0.125 g/mi and 0.140 g/mi, respectively, when these flexible-fueled, bi-fuel or dual fuel vehicles are certified to operate on gasoline or diesel fuel.

(4)(i) For bins where intermediate life standards are applicable, a manufacturer may elect not to comply with such standards. Except as permitted in paragraph (c)(4)(iv) of this section, the manufacturer must certify such vehicles to a useful life of 15 years or 150,000 miles, whichever occurs first, for LDV/LLDTs and HLDT/MDPVs.

(ii) A manufacturer electing not to comply with intermediate life standards, as permitted in paragraph (c)(4)(i) of this section, may not generate additional NO_X credits as described under § 86.1860–04 (g), except as permitted in paragraph (c)(4)(iii) of this section.

(iii) For bins where intermediate life standards are not applicable, or are specified to be optional by paragraph (c)(4)(iv) of this section, a manufacturer may generate additional NO_X credits subject to the provisions in § 86.1860–04 (g).

(iv) For diesel vehicles certified to bin 9 or bin 10, intermediate life standards are optional regardless of whether the manufacturer certifies the test group to a full useful life of 120,000 miles or 150,000 miles.

(5) In a given model year, an individual vehicle may not be included in both the Tier 2 program and an interim program.

(6) Tables S04–1 and S04–2 follow:

TABLE S04–1—TIER 2 AND INTERIM NON-TIER 2 FULL USEFUL LIFE EXHAUST MASS EMISSION STANDARDS

[Grams per mile]

Bin No.	NO_X	NMOG	CO	HCHO	PM	Notes
11	0.9	0.280	7.3	0.032	0.12	a, c
10	0.6	0.156/0.230	4.2/6.4	0.018/0.027	0.08	a, b, d
9	0.3	0.090/0.180	4.2	0.018	0.06	a, b, e
8	0.20	0.125/0.156	4.2	0.018	0.02	b, f
7	0.15	0.090	4.2	0.018	0.02	
6	0.10	0.090	4.2	0.018	0.01	
5	0.07	0.090	4.2	0.018	0.01	
4	0.04	0.070	2.1	0.011	0.01	
3	0.03	0.055	2.1	0.011	0.01	
2	0.02	0.010	2.1	0.004	0.01	
1	0.00	0.000	0.0	0.000	0.00	

Notes:
[a] This bin and its corresponding intermediate life bin are deleted at end of 2006 model year (end of 2008 model year for HLDTs and MDPVs).
[b] Higher NMOG, CO and HCHO values apply for HLDTs and MDPVs only.
[c] This bin is only for MDPVs.
[d] Optional NMOG standard of 0.280 g/mi applies for qualifying LDT4s and qualifying MDPVs only.
[e] Optional NMOG standard of 0.130 g/mi applies for qualifying LDT2s only.
[f] Higher NMOG standard deleted at end of 2008 model year.

TABLE S04–2—TIER 2 AND INTERIM NON-TIER 2 INTERMEDIATE USEFUL LIFE (50,000 MILE) EXHAUST MASS EMISSION STANDARDS (GRAMS PER MILE)

Bin No.	NO_X	NMOG	CO	HCHO	PM	Notes
11	0.6	0.195	5.0	0.022		a c f h
10	0.4	0.125/0.160	3.4/4.4	0.015/0.018		a b d f g h
9	0.2	0.075/0.140	3.4	0.015		a b e f g h
8	0.14	0.100/0.125	3.4	0.015		b f h i
7	0.11	0.075	3.4	0.015		f h
6	0.08	0.075	3.4	0.015		f h
5	0.05	0.075	3.4	0.015		f h

NOTES:
[a] This bin deleted at end of 2006 model year (end of 2008 model year for HLDTs and MDPVs).
[b] Higher NMOG, CO and HCHO values apply for HLDTs and MDPVs only.
[c] This bin is only for MDPVs.
[d] Optional NMOG standard of 0.195 g/mi applies for qualifying LDT4s and qualifying MDPVs only.
[e] Optional NMOG standard of 0.100 g/mi applies for qualifying LDT2s only.
[f] The full useful life PM standards from Table S04–1 also apply at intermediate useful life.
[g] Intermediate life standards of this bin are optional for diesels.
[h] Intermediate life standards are optional for vehicles certified to a useful life of 150,000 miles.
[i] Higher NMOG standard deleted at end of 2008 model year.

(d) *Fleet average NO_X Standards.* (1)(i) For a given individual model year's sales of Tier 2 vehicles, including model years during the phase-in years of the Tier 2 standards, manufacturers must comply with a fleet average oxides of nitrogen (NO_X) standard of 0.07 grams per mile. The manufacturer must calculate its fleet average NO_X emission level(s) as described in § 86.1860–04. Up through and including model year 2008, manufacturers must calculate separate fleet average NO_X emission levels for LDV/LLDTs and for HLDT/MDPVs as described in § 86.1860–04.

(ii) During a phase-in year, the manufacturer must comply with the 0.07 g/mi fleet average standard for the required phase-in percentage for that year as specified in paragraph (k)(1) of this section, or for the alternate phase-in percentage as permitted under paragraph (k)(6) of this section.

(2) *For Early Tier 2 LDV/LLDTs.* For model years prior to 2004, where the manufacturer desires to bank early Tier 2 NO_X credits as permitted under § 86.1861(c), the manufacturer must comply with a fleet average standard of 0.07 grams per mile for its Tier 2 LDV/LLDTs. Manufacturers must determine compliance with the NO_X fleet average standard according to regulations in § 86.1860–04 of this subpart.

(3) *For Early Tier 2 HLDT/MDPVs.* For model years prior to 2008, where the manufacturer desires to bank early Tier 2 NO_X credits as permitted under § 86.1861(c), the manufacturer must comply with a fleet average standard of 0.07 grams per mile for its Tier 2 HLDT/MDPVs. Manufacturers must determine compliance with the NO_X fleet average standard according to regulations in § 86.1860–04.

(e) *Evaporative emission standards.* Consistent with the phase-in requirements in paragraph (k) of this section, evaporative emissions from gasoline-fueled, natural gas-fueled, liquefied petroleum gas-fueled, ethanol-fueled and methanol-fueled vehicles must not exceed the standards in this paragraph (e). The standards apply equally to certification and in-use vehicles.

(1) *Diurnal-plus-hot soak evaporative hydrocarbon standards.* Hydrocarbons for LDV/LLDTs, HLDTs and MDPVs must not exceed the diurnal plus hot soak standards shown in Table S04–3 for the full three diurnal test sequence and for the supplemental two diurnal test sequence. Table S04–3 follows:

TABLE S04–3—LIGHT-DUTY DIURNAL PLUS HOT SOAK EVAPORATIVE EMISSION STANDARDS

[grams per test]

Vehicle category	3 day diurnal + hot soak	Supplemental 2 day diurnal + hot soak
LDV/LLDTs	0.95	1.2
HLDTs	1.2	1.5
MDPVs	1.4	1.75

(2) *Running loss standard.* Hydrocarbons for LDVs, LDTs and MDPVs measured on the running loss test must not exceed 0.05 grams per mile.

(3) *Refueling emission standards.* Refueling emissions must not exceed the following standards:

(i) For gasoline-fueled and methanol-fueled LDV, LDT and MDPV: 0.20 grams hydrocarbon per gallon (0.053 grams per liter) of fuel dispensed. This standard also applies for diesel-fueled LDV.

(ii) For liquefied petroleum gas-fueled LDV, LDTs and MDPVs: 0.15 grams hydrocarbon per gallon (0.04 grams per liter) of fuel dispensed.

(iii) Refueling standards for HLDTs are subject to the phase-in requirements found in § 86.1810–01(k). MDPVs must also comply with the phase-in requirement in § 86.1810–01(k) and must be grouped with HLDTs to determine phase-in compliance.

(4) *Spitback standards.* For gasoline and methanol fueled LDV/Ts and MDPVs, hydrocarbons measured on the fuel dispensing spitback test must not exceed 1.0 grams hydrocarbon (carbon if methanol-fueled) per test.

(5) *Evaporative emission requirements for interim vehicles.* (i) LDV/Ts not certified to meet the evaporative emission standards in this paragraph (e) as permitted under the phase-in schedule of paragraph (k) of this section, must meet applicable evaporative emission standards in § 86.1811–01, § 86.1812–01, § 86.1813–01, § 86.1814–02 or § 86.1815–02 except that all LDV/Ts must meet the refueling emission standards in paragraph (e)(3) of this section.

(ii) MDPVs not certified to meet the evaporative emission standards in this paragraph (e) as permitted under the phase-in schedule of paragraph (k) of this section, must meet applicable evaporative emission standards for heavy-duty vehicles in § 86.099–10.

(6) In cases where applicable California emission standards are as stringent or more stringent than applicable standards specified under this paragraph (e), the Administrator may accept data indicating compliance with California standards to demonstrate compliance for certification purposes with the standards required under this paragraph (e). The Administrator may require manufacturers to provide comparative test data to show that a vehicle meeting California standards under California test conditions and procedures will also meet the standards under this paragraph (e) when tested under test conditions and procedures in this part 86.

(f) *Supplemental exhaust emission standards for LDV/Ts.* (1) Supplemental exhaust emission standards are applicable to gasoline and diesel-fueled LDV/Ts but are not applicable to MDPVs, alternative fueled LDV/Ts, or flexible fueled LDV/Ts when operated on a fuel other than gasoline or diesel. Except as otherwise specified in this

paragraph (f), manufacturers must comply with 4000 mile and full useful life SFTP standards as determined in this paragraph (f). The 4000 mile SFTP standards must be taken from Table S04–4 and the full life SFTP standards must be calculated using the formula in paragraph (f)(2) of this section. Table S04–4 follows:

TABLE S04–4—4000 MILE SFTP STANDARDS FOR TIER 2 AND INTERIM NON-TIER 2 LDVS AND LDTS

	US06		SC03	
	NMHC + NO_X (g/mi)	CO (g/mi)	NMHC + NO_X (g/mi)	CO (g/mi)
LDV/LDT1	0.14	8.0	0.20	2.7
LDT2	0.25	10.5	0.27	3.5
LDT3	0.4	10.5	0.31	3.5
LDT4	0.6	11.8	0.44	4.0

(2)(i) Manufacturers must calculate their applicable full useful life SFTP standards for NMHC + NO_X, PM and for CO, if using the weighted CO standard. If not using the weighted CO standard, manufacturers may use the full useful life standalone Tier 1 standards for US06 and SC03. To calculate the applicable full useful life weighted NMHC + NO_X, PM and CO standards, manufacturers must use the following formula:

$$\text{SFTP Standard} = \text{SFTP Standard}_1 - [0.35 \times (\text{FTP Standard}_1 - \text{Current FTP Standard})]$$

Where:

SFTP Standard = Applicable full life weighted SFTP standard for NMHC + NO_X, PM or CO. The NMHC + NO_X and PM standards must be rounded to two decimal places and the CO standard must be rounded to one decimal place.

SFTP Standard_1 = Applicable full life Tier 1 SFTP standard for NMHC + NO_X or CO from Table S04–5. For PM only, use FTP Standard_1 for SFTP Standard_1.

FTP Standard_1 = Applicable full life Tier 1 FTP standard from Table S04–6 in this paragraph (f). For the Tier 1 NMHC + NO_X standard, add the applicable NMHC and NOx standards.

Current FTP Standard = Applicable full life FTP standard from Table S04–1 in paragraph (c) of this section. For the current NMHC + NO_X standard, add the NMOG and NO_X standards from the applicable bin.

TABLE S04–5—TIER 1 FULL USEFUL LIFE SFTP STANDARDS

Vehicle category	NMHC + NO_X (weighted g/mi) [a c]	CO (g/mi) [b c]		
		US06	SC03	Weighted
LDV/LDT1	0.91 (0.65)	11.1 (9.0)	3.7 (3.0)	4.2 (3.4)
LDT2	1.37 (1.02)	14.6 (11.6)	4.9 (3.9)	5.5 (4.4)
LDT3	1.44	16.9	5.6	6.4
LDT4	2.09	19.3	6.4	7.3

[a] Weighting for NMHC + NO_X and optional weighting for CO is 0.35x(FTP) + 0.28x(US06) + 0.37x(SC03).
[b] CO standards are stand alone for US06 and SC03 with option for a weighted standard.
[c] Intermediate life standards are shown in parentheses for diesel LDV/LLDTs opting to calculate intermediate life SFTP standards in lieu of 4,000 mile SFTP standards as permitted under paragraph (f)(6) of this section.

TABLE S04–6—TIER 1 FULL USEFUL LIFE FTP STANDARDS (G/MI)

Vehicle category	NMHC [a]	NO_X [a]	CO [a]	PM
LDV/LDT1	0.31 (0.25)	0.6 (0.4)	4.2 (3.4)	0.10
LDT2	0.40 (0.32)	0.97(0.7)	5.5 (4.4)	0.10
LDT3	0.46	0.98	6.4	0.10
LDT4	0.56	1.53	7.3	0.12

[a] Intermediate life standards are shown in parentheses for diesel LDV/LLDTs opting to calculate intermediate life SFTP standards in lieu of 4,000 mile SFTP standards as permitted under paragraph (f)(6)of this section.

(ii)(A) Manufacturers must determine compliance with NMHC + NO_X, CO and PM weighted SFTP standards calculated in paragraph (f)(2)(i) of this section by weighting their emission results as follows:

$$0.35 \times (FTP) + 0.28 \times (US06) + 0.37 \times (SC03).$$

(B) The results of the calculation in paragraph (f)(2)(ii)(A) of this section must be rounded to one more decimal place than the applicable standard calculated in paragraph (f)(2)(i) of this section and then compared with that standard.

(3) For interim non-Tier 2 gasoline, diesel and flexible-fueled LDT3s and LDT4s, manufacturers may, alternatively, meet the gasoline-fueled vehicle SFTP standards found in §§ 86.1814–02 and 86.1815–02, respectively.

(4) Interim non-Tier 2 gasoline, diesel and flexible-fueled LDV/LLDTs certified to bin 10 FTP exhaust emission standards from Table S04–1 in paragraph (c) of this section may meet the gasoline Tier 1 SFTP requirements found at §§ 86.1811–01(b), 86.1812–01(b), 86.1813–01(b), for LDVs, LDT1s, and LDT2s, respectively.

(5) SFTP standards for PM are not applicable to interim non-Tier 2 LDV/Ts. For Tier 2 LDV/Ts, the 4000 mile PM standard is equal to the full life PM standard calculated under paragraph (f)(2) of this section. The requirements of this paragraph (f)(5) also apply to Tier 2 flexible fuel vehicles when operated on gasoline or diesel fuel. (See regulations in § 86.1829-01(b)(1)(iii)(B) regarding data submittal for PM results for gasoline vehicles.)

(6)(i) In lieu of complying with 4000 mile SFTP standards described in this paragraph, diesel LDV/LLDTs through model year 2006, may comply instead with intermediate life SFTP standards derived from Tier 1 intermediate life SFTP standards for gasoline vehicles.

(ii) To calculate intermediate life SFTP standards, substitute intermediate life Tier 1 FTP and SFTP values from Tables S04–5 and S04–6 in this paragraph (f), as appropriate, for the full life values in the equation in paragraph (f)(2)(i) of this section. Substitute the applicable intermediate life standards for the full life current FTP standard. If there is no applicable intermediate life standard use the full life current FTP standard.

(iii) A manufacturer of diesel LDV/LLDTs must declare which option it will use (4,000 mile or intermediate life standards) in Part I of its certification application.

(7) For diesel vehicles certified to the bin 9 or bin 10 standards of paragraph (c) of this section, 4000 mile SFTP and intermediate life SFTP standards are optional regardless of whether the manufacturer certifies the test group to a full useful life of 120,000 miles or 150,000 miles.

(8)(i) For model year 2007 through 2009 diesel LDVs and diesel LDT1s only, a manufacturer may optionally comply with the 4000 mile US06 NMHC + NO_X standard shown in Table S04–4 for LDT2s (0.25 g/mile), instead of the standards for LDV/LDT1s (0.14 g/mile). A manufacturer choosing this option also must comply with intermediate life SFTP NMHC + NO_X standards determined using the calculation described under paragraph (f)(6)(ii) of this section. A manufacturer choosing this option must comply with the SFTP NMHC + NO_X standard determined under paragraph (f)(6)(ii) not only at intermediate life but also at full useful life and must certify such vehicles to this SFTP NMHC + NO_X standard for a full useful life of 150,000 miles or 15 years, whichever occurs first.

(ii) In Part I of its certification application for model years 2007 through 2009, a manufacturer of diesel LDV/LDT1s must declare which provision it will use (the base Tier 2 provision of paragraphs (f)(1) and (f)(2) of this section or the option described in paragraph (f)(8)(i) of this section).

(g) *Cold temperature exhaust emission standards.* These standards are applicable only to gasoline fueled LDV/Ts and MDPVs. For cold temperature exhaust emission standards, a useful life of 50,000 miles applies.

(1) For LDVs and LDT1s, the standard is 10.0 grams per mile CO.

(2) For LDT2s, LDT3s and LDT4s, and MDPVs the standard is 12.5 grams per mile CO.

(3) These standards do not apply to interim non-Tier 2 MDPVs.

(h) [Reserved]

(i) Idle CO standards and references to such standards in this subpart, do not apply to any 2004 or later model year LDV, LDT, or MDPV or to any LDV, LDT or MDPV certified to Tier 2 standards before model year 2004 for purposes of generating early NO_X credits or meeting the requirements of an alternative phase-in schedule that begins prior to the 2004 model year.

(j) *Highway NO_X exhaust emission standard.* The NO_X emissions measured on the federal Highway Fuel Economy Test in 40 CFR 1066.840 must not be greater than 1.33 times the applicable FTP NO_X standard to which the manufacturer certifies the test group. Both the measured emissions and the product of the NO_X standard and 1.33 must be rounded to the nearest 0.01 g/mi before being compared.

(k) *Phase-in of the Tier 2 FTP exhaust and evaporative requirements; small volume manufacturer flexibilities.* (1) Manufacturers must comply with the phase-in requirements in Tables S04–7 and S04–8 of this paragraph (k) for the Tier 2 FTP exhaust emission requirements specified in paragraph (c) of this section. Separate phase-in schedules are provided for LDV/LLDTs and for HLDT/MDPVs. These requirements specify the minimum percentage of the manufacturer's LDV/LLDT and HLDT/MDPV U.S. sales, by model year, that must meet the Tier 2 requirements, including the applicable fleet average standard, for their full useful lives. As the terms LDV/LLDT and HLDT/MDVP imply, LDVs and LLDTs must be grouped together to determine compliance with these phase-in requirements and HLDTs and MDPVs must also be grouped together to determine compliance with these phase-in requirements. Tables S04–7 and S04–8 follow:

TABLE S04–7—PHASE-IN PERCENTAGES FOR LDV/LLDT TIER 2 REQUIREMENTS

Model year	Percentage of LDV/LLDTs that must meet tier 2 requirements
2004	25
2005	50
2006	75
2007 and subsequent	100

TABLE S04–8—PHASE-IN PERCENTAGES FOR HLDT/MDPV TIER 2 REQUIREMENTS

ModeL year	Percentage of HLDT/MDPVs that must meet tier 2 requirements
2008	50
2009 and subsequent	100

(2) Manufacturers must also comply with the phase-in requirements in Tables S04–7 and S04–8 of this paragraph (k) for the evaporative emission requirements contained in paragraph (e) of this section.

(3) Manufacturers may opt to use different LDV/LLDTs and HLDT/MDPVs to meet the phase-in requirements for evaporative emissions and FTP exhaust emissions, provided that the manufacturer meets the minimum applicable phase-in requirements in Table S04–7 and Table S04–8 of this paragraph (k) for both FTP exhaust and evaporative emissions. A LDV, LDT or MDPV counted toward compliance with any phase-in requirement for FTP exhaust or evaporative standards, must comply with all applicable Tier 2 exhaust requirements or all applicable evaporative requirements, respectively, described in this section.

(4) LDVs, LDTs and MDPVs not certified to meet the Tier 2 FTP exhaust requirements during model years 2004–2008, as allowed under this subpart, are subject to the provisions of paragraph (l) of this section.

(5) *Provisions for small volume manufacturers.* (i) Small volume manufacturers, as defined in this part, are exempt from the Tier 2 LDV/LLDT exhaust and evaporative emissions phase-in requirements for model years 2004, 2005 and 2006 in Table S04–7 of this paragraph (k), but must comply with the 100% requirement for the 2007 and later model years for exhaust and evaporative emissions. If not complying with Tier 2 requirements during 2004, 2005 and 2006, small volume manufacturers must comply with the requirements for interim non-Tier 2 LDV/LLDTs.

(ii) Small volume manufacturers, as defined in this part, are exempt from the HLDT/MDPV exhaust and evaporative phase-in requirement for model year 2008 in Table S04–8 of this section

but must comply with the 100% requirement for the 2009 model year. Small volume manufacturers are also exempt from the HLDT/MDPV interim fleet average NO_X standard (0.20 g/mi) and its phase-in for the 2004, 2005 and 2006 model years.

(iii) Small volume manufacturers must comply with the FTP exhaust emission standards from Tables S04–1 and 2 of paragraph (c) of this section for all HLDT/MDPVs of model years 2004 and later, except that 2004 model year HLDTs may comply with Tier 1 exhaust emission standards subject to the provisions of paragraph (l)(2)(vii) of this section, and 2004 model year MDPVs may comply with heavy-duty vehicle standards subject to the provisions of paragraph (l)(2)(viii) of this section. Small volume manufacturers must also comply with the 0.20 g/mi fleet average NO_X standard for 2007 and 2008 model year HLDT/MDPVs; the Tier 2 0.07 g/mi fleet average NO_X standard for the 2009 and later model year HLDT/MDPVs; and the evaporative emission standards in Table S04–3 of this section for the 2009 and later model years.

(iv) Vehicles produced by small volume manufacturers, as defined in § 86.1838–01, are exempt from the LDV/LLDT evaporative emissions standards in Table S09–1 of § 86.1811–09(e) for model years 2009 and 2010, but must comply with the Tier 2 evaporative emission standards in Table S04–3 in paragraph (e)(1) of this section for model years 2009 and 2010.

(v) Vehicles produced by small volume manufacturers, as defined in § 86.1838–01, are exempt from the HLDT/MDPV evaporative emissions standards in Table S09–1 of § 86.1811–09(e) for model years 2010 and 2011, but must comply with the Tier 2 evaporative emission standards in Table S04–3 in paragraph (e)(1) of this section for model years 2010 and 2011.

(vi) Small volume manufacturers, as defined in § 86.1838–01, are exempt from the LDV/LLDT cold temperature NMHC phase-in requirements in Table S10–1 of § 86.1811–10(g) for model years 2010, 2011, and 2012, but must comply with the 100% requirement for 2013 and later model years for cold temperature NMHC standards.

(vii) Small volume manufacturers, as defined in § 86.1838–01, are exempt from the HLDT/MDPV cold temperature NMHC phase-in requirements in Table S10–1 of § 86.1811–10(g) for model years 2012, 2013, and 2014, but must comply with the 100% requirement for 2015 and later model years for cold temperature NMHC standards.

(6)(i) A manufacturer may elect an alternate phase-in schedule that results in 100% phase-in for LDV/LLDTs by 2007. Alternate phase-in schedules must produce a sum of at least 250% when the percentages of LDV/LLDTs certified to Tier 2 requirements for each model year from 2001 through 2007 are summed. As an example, a 10/25/50/65/100 percent phase-in that began in 2003 would have a sum of 250 percent and would be acceptable. However, a 10/25/40/70/100 percent phase-in that began the same year would have a sum of 245 percent and would not be acceptable.

(ii) A manufacturer electing this option for LDV/LLDTs may calculate its compliance with the evaporative standards in paragraph (e)(1) of this section separately from its compliance with Tier 2 exhaust standards, provided that the phase-in schedules for each separately produce a sum of at least 250 percent when calculated as described in paragraph (k)(6)(i) of this section. A vehicle counted towards compliance with any phase-in requirement for the Tier 2 exhaust standards or the evaporative standards in paragraph (e)(1) of this section, must comply with all applicable Tier 2 exhaust standards or all evaporative standards, as applicable, described in this section.

(iii) In addition to the requirements of paragraphs (k)(6)(i) and (ii) of this section, except as permitted in paragraph (k)(6)(vii) of this section, a manufacturer of LDV/LLDTs electing to use an alternate phase-in schedule for compliance with the Tier 2 exhaust standards or the evaporative standards in paragraph (e)(1) of this section must ensure that the sum of the percentages of vehicles from model years 2001 through 2004, meeting such exhaust or evaporative standards, as applicable, is at least 25%.

(iv) A manufacturer may elect an alternate phase-in schedule that results in 100% phase-in for HLDT/MDPVs by

2009. The requirements of paragraphs (k)(6)(i) through (k)(6)(ii) of this section apply, except that for HLDT/MDPVs, the calculation described in paragraphs (k)(6)(i) and (k)(6)(ii) of this section may cover model years 2001 through 2009 and must produce a sum of at least 150%.

(v) A manufacturer electing to use any alternate phase-in schedule permitted under this section must provide in its Application for Certification for the first year in which it intends to use such a schedule, and in each succeeding year during the phase-in, the intended phase-in percentages for that model year and the remaining phase-in years along with the intended final sum of those percentages as described in this paragraph (k)(6). This information may be included with the information required under § 86.1844–01(d)(13). In its year end annual reports, as required under § 86.1844–01(e)(4) the manufacturer must include sufficient information so that the Administrator can verify compliance with the alternative phase-in schedule established under paragraph (k)(6) of this section.

(vi) Under an alternate phase-in schedule, the projected phase-in percentage is not binding for a given model year, provided the sums of the actual phase-in percentages that occur meet the appropriate total sums as required in paragraph (k)(6) of this section, and provided that 100% actual compliance is reached for the appropriate model year, either 2007 or 2009, as described in paragraph (k)(6) of this section.

(vii) A manufacturer unable to meet the 25% requirement in paragraph (k)(6)(iii) of this section, must:

(A) Ensure that the sum of the percentages of vehicles for model years 2001 through 2004, meeting such exhaust or evaporative standards, as applicable, is at least 20%.

(B) Subtract that sum of percentages for model years 2001 through 2004 from 25%, and multiply the unrounded result by 2.

(C) Round the product from paragraph (k)(6)(vii)(B) of this section to the nearest 0.1% and add that to 50%. That sum becomes the required phase-in percentage for the 2005 model year.

(D) Comply with the phase-in percentage for the 2005 model year determined in paragraph (k)(6)(vii)(C) of this section.

(E) Comply with a minimum phase-in percentage for the 2006 model year determined by the following equation:

$$\text{minimum phase-in percentage for 2006} = [75\% - (2005_{\text{api}} - 2005_{\text{rpi}})]$$

Where:

2005_{rpi} = the required phase-in for the 2005 model year as determined in paragraph (k)(6)(vii)(C) of this section; and

2005_{api} = the manufacturer's actual phase-in quantity for the 2005 model year.

(7)(i) Sales percentages for the purpose of determining compliance with the phase-in of the Tier 2 requirements and the phase-in of the evaporative standards in paragraph (e)(1) of this section, must be based upon projected U.S. sales of LDV/LLDTs and HLDT/MDPVs of the applicable model year by the manufacturer to the point of first sale. Such sales percentages must be rounded to the nearest one tenth of a percent, and must not include vehicles and trucks projected to be sold to points of first sale in California or a state that has adopted California requirements for that model year as permitted under section 177 of the Act.

(ii) Alternatively, the manufacturer may petition the Administrator to allow actual volume produced for U.S. sales to be used in lieu of projected U.S. sales for purposes of determining compliance with the phase-in percentage requirements under this section. The manufacturer must submit its petition within 30 days of the end of the model year to the Vehicle Programs and Compliance Division. For EPA to approve the use of actual volume produced for U.S. sales, the manufacturer must establish to the satisfaction of the Administrator, that actual production volume is functionally equivalent to actual sales volume of LDV/LLDTs and HLDT/MDPVs sold in states other than California and states that have adopted California standards.

(iii) Manufacturers must submit information showing compliance with all phase-in requirements of this section with its Part I application as required by § 86.1844(d)(13).

(l) *FTP exhaust standards for interim non-Tier 2 vehicles*—(1) *FTP exhaust emission standards for interim non-Tier 2 LDV/LLDTs.* (i) LDV/LLDTs that are not used to meet the Tier 2 phase-in requirements including the Tier 2 fleet average NO_X requirement during the Tier 2 phase-in period (model years 2004–2006) must comply with the full useful life FTP exhaust emission standards listed in Table S04–1 of paragraph (c) of this section and the corresponding intermediate useful life standards, if any, in Table S04–2 of paragraph (c) of this section. Manufacturers may choose the bin of full useful life standards to which they certify a test group of vehicles, subject to the requirements in paragraph (l)(3)(i) of this section. In a given model year, an individual vehicle may not be used to comply with both the Tier 2 fleet average NO_X standard and the applicable interim fleet average NO_X standard although vehicles from the same test group may be separated and the vehicles counted toward compliance with either program.

(ii) The provisions of paragraphs (c)(1), (2) and (3) of this section apply to flexible-fueled, dual fuel and multi-fuel interim non-Tier 2 LDV/LLDTs.

(iii) Only manufacturers that comply with the applicable FTP standards in Tables S04–1 and 2 of paragraph (c) of this section for all of their 2004 model year HLDTs and declare their intention to comply with the 2004 model year 25% phase-in requirement to the 0.20 g/mi interim fleet average NO_X standard for HLDTs (or HLDT/MDPVs) described in this paragraph (l) may use the optional higher NMOG values for interim LDT2s certified to bin 9 standards that are shown in Tables S04–1 and 2. Manufacturers must declare their intention to comply with the full 2004 model year 25% phase-in requirement in Part I of their HLDT or their HLDT/MDPV, as applicable, certification applications.

(iv) The provisions of paragraph (c)(4) of this section apply to interim non-Tier 2 vehicles.

(2) *FTP exhaust emission standards for interim non-Tier 2 HLDTs and interim non-Tier 2 MDPVs.* (i) Except as permitted under paragraphs (l)(2) (vii) and (viii) of this section, HLDTs and MDPVs of model years 2004–2008 that are not used to meet the Tier 2 FTP phase-in requirements including the Tier 2 fleet average NO_X requirement must comply with the full useful life FTP exhaust emission standards listed in Table S04–1 of paragraph (c) of this section and, the corresponding intermediate useful life standards, if any, in Table S04–2 of paragraph (c) of this section. Manufacturers may choose the bin of full useful life standards to which they certify a test group of vehicles, subject to the requirements in paragraph (l)(3)(ii) of this section.

(ii) Except as permitted under paragraphs (l)(2) (vii) and (viii) of this section, HLDTs and MDPVs of model years 2004–2008 that are not used to meet the Tier 2 FTP phase-in requirements including the Tier 2 fleet average NO_X requirement must comply with the fleet average NO_X standard described in paragraph (l)(3)(ii) of this section subject to the phase-in schedule in paragraph (l)(2)(iv) of this section, i.e. 25 percent of the HLDT and MDPVs must meet the fleet average standard of 0.20 g/mi in 2004, 50 percent in 2005, and so on.

(iii) Manufacturers may choose the bin of full useful life standards and corresponding intermediate life standards to which they certify test groups of HLDTs and MDPVs, subject to the requirements in paragraph (l)(3)(ii) of this section. Manufacturers may include HLDT/MDPVs in the interim program that are not used to meet the Tier 2 fleet average NO_X standard or the phase-in percentage requirements in the Tier 2 program or to generate Tier 2 NO_X credits. In a given model year, an individual vehicle may not be used to comply with both the Tier 2 fleet average NO_X standard and the applicable interim fleet average NO_X standard although vehicles from the same test group may be separated and the vehicles counted toward compliance with either program.

(iv) *Phase-in schedule for interim non-Tier 2 HLDT/MDPVs.* Table S04–9 of this paragraph (l) specifies the minimum percentage of the manufacturer's interim non-Tier 2 HLDT/MDPV U.S. sales, by model year, that must comply

with the fleet average NO_X standard described in paragraph (l)(3)(ii) of this section. Table S04–9 follows:

TABLE S04–9—PHASE-IN PERCENTAGES FOR COMPLIANCE WITH INTERIM NON-TIER 2 FLEET AVERAGE NO_X STANDARD FOR HLDT/MDPVS

Model year	Percentage of non-tier 2 HLDT/MDPVs that must meet interim non-tier 2 fleet average NO_X standard
2004	25
2005	50
2006	75
2007 and 2008	100

(v)(A) A manufacturer may elect an alternate phase-in schedule, beginning as early as the 2001 model year, that results in 100% compliance by 2007 with the fleet average NO_X standard for interim non-Tier 2 HLDT/MDPVs described in paragraph (l)(3)(ii) of this section. The requirements of paragraph (k)(6) of this section apply to the selection of an alternate phase-in schedule.

(B) If a manufacturer elects not to bring all of its HLDT/MDPVs into compliance with the interim requirements in 2004 as permitted under paragraphs (l)(2)(vii) and

(viii) of this section, it may still use an alternate phase-in schedule to attain 100% compliance with the interim fleet average NO_X standard for HLDT/MDPVs, but the sum of phase-in percentages it must meet will be 225% rather than 250%. If the manufacturer commences its 2004 model year on or after December 21, 2003, for any HLDT/MDPVs, the manufacturer must increase the 225% by the fraction of its 2004 model year HLDT/MDPVs whose model year commenced on or after that date and which were brought into compliance with the 0.20 g/mi corporate average NO_X standard as required under paragraph (l)(2)(ix) of this section. The manufacturer must ensure that the sum of the percentages of vehicles up through model year 2005 complying with the interim fleet average NO_X standard is at least 50%.

(vi) The provisions of paragraphs (c)(1), (2) and (3) of this section apply to flexible-fueled, dual fuel and multi-fuel interim non-Tier 2 HLDT/MDPVs.

(vii) For 2004 model year HLDT test groups whose model year commences before December 21, 2003, the manufacturer may exempt such HLDTs from compliance with any requirements applicable to interim non-Tier 2 HLDTs, and such HLDTs must be produced in accordance with standards and requirements in §§ 86.1814–02 and 86.1815–02. Such HLDTs must also meet the refueling emission standards contained in paragraph (e)(3) of this section.

(viii) For 2004 model year heavy-duty vehicles whose model year commences before December 21, 2003, the manufacturer may exempt such vehicles from compliance with any requirements applicable to interim non-Tier 2 MDPVs. Exempted vehicles will not be considered MDPVs and must be produced in accordance with standards and requirements in § 86.099–10. Exempted vehicles are also exempted from refueling emission standards.

(ix) For 2004 model year HLDT and MDPV test groups whose model year commences on or after December 21, 2003, the manufacturer must comply with all interim non-Tier 2 requirements in this section.

(A) All such vehicles, but not more than 25% of the manufacturer's total sales of 2004 model year HLDT/MDPVs must meet the interim non-Tier 2 fleet average NO_X standard as described in paragraph (l)(3)(ii) of this section.

(B) All such vehicles but not more than 40% of the manufacturer's 2004 model year HLDT/MDPVs must comply with the refueling requirements in paragraph (e)(3) of this section.

(x) Only those manufacturers that comply with the interim non-Tier 2 FTP standards for all of their 2004 model year HLDTs and declare their intention to comply with the 2004 model year 25% phase-in requirement to the fleet average interim NO_X standard for HLDTs or HLDT/MDPVs of 0.20 g/mi described in paragraph (l) of this section may use the optional higher NMOG values for interim LDT4s certified to bin 10 standards that are shown in Tables S04–1 and 2 of paragraph (c) of this section. Manufacturers must declare their intention to comply with the 2004 model year 25% phase-in requirement in Part I of their HLDT certification applications.

(xi) Only those manufacturers that comply with the interim non-Tier 2 FTP standards for all of their 2004 model year MDPVs, and declare their intention to comply with the 2004 model year 25% phase-in requirement to the fleet average interim NO_X standard for MDPVs or HLDT/MDPVs of 0.20 g/mi described in paragraph (l) of this section may:

(A) Use the exhaust emission standards of bin 11 in Tables S04–1 and S04–2 of paragraph (c) in this section for MDPVs through model year 2008;

(B) For diesel-fueled vehicles, certify the engines in such vehicles, through model year 2007, to provisions in this part 86 applicable to diesel-fueled heavy-duty engines of the appropriate model year. Such diesel fueled vehicles must not be included in any count or determination of compliance with the phase-in requirements applicable to interim non-Tier 2 MDPVs; and

(C) Use the optional higher NMOG values for interim LDT4s certified to bin 10 standards that are shown in Tables S04–1 and 2.

(xii) Manufacturers electing to comply with the provisions of paragraph (l)(2)(xi) of this section must declare their intention to comply with the 2004 model year 25% phase-in requirement to the fleet average interim NO_X standard for MDPVs or HLDT/MDPVs of 0.20 g/mi in Part I of their MDPV certification applications.

(xiii) Where diesel-fueled heavy-duty engines are used as permitted under paragraph (l)(2)(xi)(B) of this section, such engines must be treated as a separate averaging set—MDPV HDDEs—under the averaging, banking and trading provisions applicable to heavy-duty diesel engines. Only NO_X credits generated by engine-certified diesel engines that are used in other MDPVs can be applied to these engines. Manufacturers wishing to average, bank or trade credits for MDPV HDDEs must comply with the requirements in this paragraph and with all requirements applicable to heavy-duty engine averaging, banking and trading in this part.

(3) *Fleet average NO_X standards for interim non-Tier 2 LDV/Ts and MDPVs.* (i) Manufacturers must comply with a fleet average full useful life NO_X standard for their interim non-Tier 2 LDV/LLDTs, on an annual basis, of 0.30 grams per mile.

(ii) Manufacturers must comply with a fleet average full useful life NO_X standard for their interim non-Tier 2 HLDT/MDPVs, excluding those HLDTs and MDPVs not yet covered by the phase-in requirement described in paragraph (l)(2)(ii) of this section, on an annual basis, of 0.20 grams per mile.

(iii) Manufacturers must determine their compliance with these interim fleet average NO_X standards for each model year by separately computing the sales weighted average NO_X level of all interim non-Tier 2 LDV/LLDTs and all interim non-Tier 2 HLDT/MDPVs (excluding those not yet phased in as described in paragraph (l)(2)(ii) of this section), using the methodology in § 86.1860.

(iv) Manufacturers may generate, bank, average, trade and use interim non-Tier 2 NO_X credits based on their NO_X fleet average as determined under paragraph (l)(3)(iii) of this section. Unless waived or modified by the Administrator, the provisions of § 86.1861 of this part apply to the generation, banking, averaging, trading and use of credits generated by interim non-Tier 2 vehicles. NO_X credits generated by interim non-Tier 2 vehicles are not subject to any discount except as required by § 86.1861–04(e).

(m) *NMOG standards for diesel, flexible fueled and dual-fueled LDV/Ts and MDPVs.* (1) For diesel fueled LDV/Ts and MDPVs, the term ''NMOG'' in both the Tier 2 and interim non-Tier 2 standards means non-methane hydrocarbons.

(2) Flexible-fueled and dual-fuel Tier 2 and interim non-Tier 2 vehicles must be certified to NMOG exhaust emission standards both for operation on gasoline and on any alternate fuel they are designed to use. Manufacturers may measure NMHC in lieu of NMOG when flexible-fueled and dual-fuel vehicles are operated on gasoline, subject to the requirements of § 86.1810(p).

(n) *Requirements for vehicles with rechargeable energy storage systems.* Manufacturers must measure emissions from hybrid electric vehicles (including plug-in hybrid electric vehicles) as described in 40 CFR part 1066, subpart F,

except that these procedures do not apply for plug-in hybrid electric vehicles during charge-depleting operation.

(o) *NMOG measurement.* (1) Manufacturers must measure NMOG emissions using the procedures described in 40 CFR 1066.635.

(2) Manufacturers must not apply reactivity adjustment factors (RAFs) to NMOG measurements. See § 86.1841.

(p) *In-use standards.* (1) Table S04–10 of this paragraph (p) contains in-use emission standards applicable only to vehicles certified to the bins shown in the table. These standards apply to in-use testing performed by the manufacturer pursuant to regulations at §§ 86.1845–01, 86.1845–04 and 86.1846–01 and to in-use testing performed by EPA. These standards do not apply to certification or Selective Enforcement Auditing.

(2) These standards apply only to LDV/LLDTs produced up through the 2008 model year, and HLDT/MDPVs produced up through the 2010 model year. These standards are subject to other limitations described in paragraph (p)(3) of this section.

(3) For the first model year and also for the next model year after that, in which a test group of vehicles is certified to a bin of standards to which it has not previously been certified, the standards in Table S04–10 of this paragraph (p) apply for purposes of in-use testing only. The standards apply equally to all LDV/Ts and MDPVs subject to the model year limitation in paragraph (p)(2) of this section. Table S04–10 follows:

TABLE S04–10—IN-USE COMPLIANCE STANDARDS (G/MI)

[Certification standards shown for reference purposes]

Bin number	Durability period (miles)	NO_X In-use	NO_X certification	NMOG In-use	NMOG certification
5	50,000	0.07	0.05	n/a	0.075
5	120,000	0.10	0.07	n/a	0.090
4	120,000	0.06	0.04	n/a	0.070
3	120,000	0.05	0.03	0.09	0.055
2	120,000	0.03	0.02	0.02	0.010

(4) For diesel vehicles certified to bin 10, separate in-use standards apply for NO_X and PM emissions. These standards are determined by multiplying the applicable NO_X and PM certification standards by factors of 1.2 and 1.35, respectively, and then rounding the result to one more decimal place than contained in the certification standard. The resultant standards do not apply for certification or selective enforcement auditing.

(5) For diesel vehicles certified to bin 7 and bin 8 only in model years 2007 through 2009, a manufacturer may optionally comply with the bin 5 FTP PM standard shown in Table S04–1. For diesel vehicles choosing this option, separate in-use NO_X standards apply at high altitude conditions as defined in § 86.1803–01. These standards are determined by multiplying the applicable NO_X certification standards by a factor of 1.2. The resultant standards apply only in-use at high altitude conditions and do not apply for certification or selective enforcement auditing. A manufacturer choosing this option must certify such vehicles to the applicable FTP NO_X and PM standards for a full useful life of 150,000 miles or 15 years, whichever occurs first. A manufacturer choosing this option would not be allowed to generate additional credits as described under § 86.1860–04 (g).

(q) *Hardship provision for small volume manufacturers.* (1) A small volume manufacturer may apply for relief from any applicable final phase-in model year contained in this section. Relief will only be available to defer required compliance with a completely new set of standards, a fleet average NO_X standard, and/or evaporative emission standard for 100% of affected vehicles for one model year. Thus, a small volume manufacturer that obtains relief may:

(i) Defer 100% compliance with the fleet average NO_X standard for interim LDV/LLDTs (0.30 g/mi) until 2005;

(ii) Defer 100% compliance with the evaporative emission standards and/or fleet average NO_X standard for Tier 2 LDV/LLDTs (0.07 g/mi) until 2008;

(iii) Defer 100% compliance with the requirements that interim HLDTs and MDPVs comply with applicable emission standards shown in Tables S04–1 and S04–2, until 2005;

(iv) Defer 100% compliance with the fleet average NO_X standard for interim HLDT/MDPVs (0.20 g/mi) until 2008; and

(v) Defer 100% compliance with the evaporative emission standards and/or fleet average NO_X standard for Tier 2 HLDT/MDPVs (0.07 g/mi) until 2010.

(vi) Defer compliance with the LDV/LLDT evaporative emissions standards in Table S09–1 of § 86.1811–09(e) until 2013, and defer 100% compliance with the LDV/LLDT evaporative emissions standards in Table S09–2 of § 86.1811–09(e) until 2016. (The hardship relief may be extended one additional model year—two model years total.)

(vii) Defer compliance with the HLDT/MDPV evaporative emissions standards in Table S09–1 of § 86.1811–09(e) until 2014, and defer 100% compliance with the HLDT/MDPV evaporative emissions standards in Table S09–2 of § 86.1811–09(e) until 2016. (The hardship relief may be extended one additional model year—two model years total.)

(viii) Defer 100% compliance with the LDV/LLDT cold temperature NMHC standards in Table S10–X of § 86.1811–10(g) until 2015. (The hardship relief may be extended one additional model year—two model years total.)

(ix) Defer 100% compliance with the HLDT/MDPV cold temperature NMHC standards in Table S10–X of § 86.1811–10(g) until 2017. (The hardship relief may be extended one additional model year—two model years total.)

(2) Applications for relief must be in writing and must:

(i) Be submitted before the earliest date of noncompliance;

(ii) Include evidence that the manufacturer will incur severe economic hardship if relief is not granted;

(iii) Include evidence that the noncompliance will occur despite the best efforts of the manufacturer to comply; and

(iv) Include evidence that the manufacturer has made every reasonable effort to purchase credits to address the noncompliance, where applicable.

(r) *NMOG standard adjustment for direct ozone reducing devices.* (1) A manufacturer may obtain NMOG credit for use in certifying to the exhaust NMOG standards listed in paragraph (c) of this section and for use in complying with the in-use standards of paragraph (p) of this section, where applicable. This credit effectively allows the manufacturer to increase the exhaust NMOG emission standards listed in these paragraphs by the amount of the applicable credit. For example, if the applicable NMOG credit was 0.01 g/mi, and the vehicle was being certified in Bin 5, as described in Table S04–1 of paragraph (c) of this section, exhaust NMOG emissions must be no greater than 0.10 g/mi, as opposed to the normal NMOG certification standard of 0.09 g/mi in Bin 5.

(2) The NMOG credit must be determined through a two-step process.

(i) The first step must determine the ozone reduction potential of the direct ozone reducing device, the ozone reduction potential of exhaust NMOG reductions beyond Bin 5 of the Tier 2 standards, and the ratio of the two methods of reducing ambient ozone levels. The requirements for this step are described in paragraph (r)(3) of this section.

(ii) The second step must demonstrate and certify the relevant performance characteristics of the specific ozone reducing device. The requirements for this step are described in paragraph (r)(4) of this section.

(3) The ozone reduction potential of the direct ozone reducing device and the ozone reduction potential of exhaust NMOG reductions beyond Bin 5 of the Tier 2 standards must be estimated using procedures which are approved by the Administrator in advance. At a minimum:

(i) The modeling must utilize an urban airshed model using up-to-date chemical and meteorological simulation techniques;

(ii) Four local areas must be modeled: New York City, Chicago, Atlanta and Houston;

(iii) The ozone episodes to be modeled must meet the selection criteria established by EPA for State ozone SIPs;

(iv) Photochemical and dispersion modeling must follow that used by EPA to project the ozone impacts of this rule, or its equivalent;

(v) Emission projections must be made for calendar year 2007 and be consistent with those used by EPA in support of this final rule, or reflect updates approved by EPA;

(vi) Baseline emissions (emissions prior to use of the direct ozone reducing device or the VOC emission reductions) must include the benefits of the Tier 2 emission and sulfur standards; as well as all other emission controls assumed in EPA's ozone modeling of the benefits of the Tier 2 and sulfur standards, as described in the Final Regulatory Impact Analysis to the Tier 2 and Sulfur Rule;

(vii) The ozone benefit of the direct ozone reducing device must assume a radiator area of 0.29 square meters, an air flow velocity through the radiator of 40% of vehicle speed, and an ozone reduction efficiency of 80%, or other values as approved by the Administrator;

(viii) The ozone level of the air entering the direct ozone reducing device must be assumed to be 40% less than that existing in the grid cell where the vehicle is located;

(ix) The ozone benefit of VOC emission reductions must be modeled by assuming that all Tier 2 LDVs, LDTs and MDPVs meet an exhaust NMOG standard of 0.055 g/mi or lower instead of a 0.09 g/mi NMOG standard;

(x) The ozone reducing device must be assumed to be present on all of the Tier 2 LDVs, LDTs and MDPVs modeled as meeting the more stringent NMOG standard described in paragraph (r)(3)(ix) of this section;

(xi) The relationship between changes in exhaust NMOG emission standards and in-use VOC emissions must be determined sufficiently far in the future to ensure that the change in ozone being modeled is sufficiently large to allow comparison with the impact of the ozone reducing device;

(xii) LDV, LDT and MDPV emissions must be modeled using the updated Tier 2 emission model developed by EPA as part of the Tier 2 rulemaking (available from EPA upon request) or MOBILE6, once this model is available;

(xiii) The ozone benefit of the direct ozone reducing device must be the reduction in the peak one-hour ozone level anywhere in the modeled region on the day when ozone is at its highest;

(xiv) The NMOG credit in each local area must be the reduction in peak one hour ozone associated with use of the direct ozone reducing device divided by the reduction in peak one hour ozone associated with the more stringent exhaust NMOG emission standard multiplied by the reduction the exhaust NMOG standard (in g/mi) modeled in paragraph (r)(3)(ix) of this section; and

(xv) The NMOG credit applicable to the generic direct ozone reducing device modeled in paragraph (r)(3)(vii) of this section must be determined by arithmetically averaging the NMOG credit determined in paragraph (r)(3)(xiv) of this section for each of the four local areas.

(4) The manufacturer must submit data, using procedures which have been approved by the Administrator in advance, that demonstrate the following aspects of the device being certified:

(i) The air flowrate through the device as a function of vehicle speed;

(ii) The ozone reduction efficiency of the device over the useful life of the vehicle for a range of vehicle speeds and ozone levels;

(iii) The method through which the onboard diagnostic system will detect improper performance.

(5) The NMOG credit for the specific application of this technology tested under the provisions of paragraph (r)(4) of this section is the four-area NMOG credit determined in paragraph (r)(3)(xv) of this section scaled based on the performance of the specific application tested under the provisions of paragraph (r)(4) of this section relative to those assumed in paragraph (r)(3)(vii) of this section. This scaling must assume a linear relationship between the NMOG credit and three aspects of the direct ozone reducing device: radiator area, average air flow through the radiator relative to vehicle speed, and ozone reduction efficiency and the NMOG credit. The NMOG credit must be rounded to the nearest 0.001

g/mi. For example, if the NMOG credit determined in paragraph (r)(3)(xv) of this section was 0.01 g/mi and the specific direct ozone reducing device being certified had an area of 0.20 square meters, an air flow velocity of 30% of vehicle speed and an ozone reducing efficiency of 70%, and the generic ozone reducing device simulated in the ozone model under paragraph (r)(3)(vii) of this section had an area of 0.29 square meters, an air flow velocity of 40% of vehicle speed and an ozone reducing efficiency of 80%, the NMOG credit applicable to the specific device being certified would be:

0.01 g/mi * (0.20/0.29) * (30%/40%) * 70%/80%) = 0.005

(s) Manufacturers may request to group heavy-duty vehicles into the same test group as other vehicles subject to more stringent standards, so long as all vehicles in the test group meet the most stringent standards applicable to any vehicle within that test group, as provided at § 86.1827–1(a)(5) and (d)(4).

[65 FR 6854, Feb. 10, 2000; 65 FR 10598, Feb. 28, 2000, as amended at 65 FR 59970, Oct. 6, 2000; 66 FR 19309, Apr. 13, 2001; 67 FR 72825, Dec. 6, 2002; 70 FR 40443, July 13, 2005; 71 FR 16060, Mar. 30, 2006; 72 FR 8562, Feb. 26, 2007; 76 FR 57377, Sept. 15, 2011; 79 FR 23713, Apr. 28, 2014; 80 FR 9105, Feb. 19, 2015]

§ 86.1811–09 Emission standards for light-duty vehicles, light-duty trucks and medium-duty passenger vehicles.

Section 86.1811–09 includes text that specifies requirements that differ from § 86.1811–04. Where a paragraph in § 86.1811–04 is identical and applicable to § 86.1811–09, this may be indicated by specifying the corresponding paragraph and the statement ''[Reserved]. For guidance see § 86.1811–04.'' Where a corresponding paragraph of § 86.1811–04 is not applicable, this is indicated by the statement ''[Reserved]''

(a) *Applicability*. (1) This section contains regulations implementing emission standards for all LDVs, LDTs and MDPVs. This section applies to 2009 and later model year LDVs, LDTs and MDPVs fueled by gasoline, diesel, methanol, ethanol, natural gas and liquefied petroleum gas fuels, except as noted. Additionally, this section applies to hybrid electric vehicles (HEVs) and zero emission vehicles (ZEVs). Unless otherwise specified, multi-fueled vehicles must comply with all requirements established for each consumed fuel.

(2) through (4) [Reserved]. For guidance see § 86.1811–04.

(5) The exhaust emission standards and evaporative emission standards of this section apply equally to certification and in-use LDVs, LDTs and MDPVs, unless otherwise specified. See paragraph (t) of this section for interim evaporative emission in-use standards that are different than the certification evaporative emission standards specified in paragraph (e) of this section.

(b) through (d) [Reserved]. For guidance see § 86.1811–04.

(e) *Evaporative emission standards*. Evaporative emissions from gasoline-fueled, natural gas-fueled, liquefied petroleum gas-fueled, ethanol-fueled and methanol-fueled vehicles must not exceed the standards in this paragraph (e) at low altitude conditions. The evaporative emission standards specified in § 86.1811–04(e)(1) continue to apply at high altitude conditions. The standards apply equally to certification and in-use vehicles.

(1) *Diurnal-plus-hot soak evaporative hydrocarbon standards*. (i) Hydrocarbons for LDV/LLDTs, HLDTs and MDPVs that are gasoline-fueled, dedicated natural gas-fueled, dedicated liquefied petroleum gas-fueled, dedicated ethanol-fueled, dedicated methanol-fueled and multi-fueled vehicles when operating on gasoline must not exceed the diurnal plus hot soak standards shown in Table S09–1 for the full three diurnal test sequence and for the supplemental two diurnal test sequence. The standards apply equally to certification and in-use vehicles, except as otherwise specified in paragraph (t) of this section. Table S09–1 follows:

TABLE S09–1—LIGHT-DUTY DIURNAL PLUS HOT SOAK EVAPORATIVE EMISSION STANDARDS

[grams per test]

Vehicle category	Model year	3 day diurnal + hot soak	Supplemental 2 day diurnal + hot soak
LDVs	2009	0.50	0.65
LLDTs	2009	0.65	0.85
HLDTs	2010	0.90	1.15
MDPVs	2010	1.00	1.25

(ii) Hydrocarbons for LDV/LLDTs, HLDTs and MDPVs that are multi-fueled vehicles operating on non-gasoline fuel must not exceed the diurnal plus hot soak standards shown in Table S09–2 for the full three diurnal test sequence and for the supplemental two diurnal test sequence. The standards apply equally to certification and in-use vehicles except as otherwise specified in paragraph (t) of this section. Table S09–2 follows:

TABLE S09–2—LIGHT-DUTY DIURNAL PLUS HOT SOAK EVAPORATIVE EMISSION STANDARDS: NON-GASOLINE PORTION OF MULTI-FUELED VEHICLES

[grams per test]

Vehicle category	3 day diurnal + hot soak	Supplemental 2 day diurnal + hot soak
LDVs	0.50	0.65
LLDTs	0.65	0.85
HLDTs	0.90	1.15
MDPVs	1.00	1.25

(iii) For multi-fueled vehicles operating on non-gasoline fuel, manufacturers must comply with the phase-in requirements in Table S09–3 of this paragraph for the evaporative emission requirements specified in Table S09–2 of this section. Phase-in schedules are grouped together for LDV/LLDTs and HLDT/MDPVs. These requirements specify the minimum percentage of the manufacturer's LDV/LLDT/HLDT/MDPV 50-State sales, by model year, that must meet the requirements for their full useful lives. Table S09–3 follows:

TABLE S09–3—PHASE-IN PERCENTAGES FOR LIGHT-DUTY DIURNAL PLUS HOT SOAK EVAPORATIVE EMISSION STANDARDS: NON-GASOLINE PORTION OF MULTI-FUELED VEHICLES

Model year	Percentage of vehicles that must meet evaporative emission requirements
2012	30
2013	60
2014 and subsequent	100

(2) through (6) [Reserved]. For guidance see § 86.1811–04.

(7) In cases where vehicles are certified to evaporative emission standards in Tables S09–1 and S09–2 of this section, the Administrator may accept evaporative emissions data for low altitude testing in accordance with California test conditions and test procedures (in lieu of the evaporative emission test condition and test procedure requirements of subpart B of this part).

(f) through (s) [Reserved]. For guidance see § 86.1811–04.

(t) *Evaporative emission in-use standards.* (1) For LDVs and LLDTs certified prior to the 2012 model year, the Tier 2 LDV/LLDT evaporative emissions standards in Table S04–3 of § 86.1811–04(e) shall apply to in-use vehicles for only the first three model years after an evaporative family is first certified to the LDV/LLDT evaporative emission standards in Table S09–1 of paragraph (e) of this section, as shown in Table S09–4. For example, evaporative families first certified to the LDV/LLDT standards in Table S09–1 in the 2011 model year must meet the Tier 2 LDV/LLDT evaporative emission standards (Table S04–3) in-use for 2011, 2012, and 2013 model year vehicles (applying Tier 2 standards in-use is limited to the first three years after introduction of a vehicle).

(2) For HLDTs and MDPVs certified prior to the 2013 model year, the Tier 2 HLDT/MDPV evaporative emissions standards in Table S04–3 of § 86.1811–04(e) shall apply to in-use vehicles for only the first three model years after an evaporative family is first certified to the HLDT/MDPV evaporative emission standards in Table S09–1 of paragraph (e) of this section, as shown in Table S09–5. For example, evaporative families first certified to the HLDT/MDPV standards in Table S09–1 in the 2012 model year must meet the Tier 2 HLDT/MDPV evaporative emission standards (Table S04–3) in-use for 2012, 2013, and 2014 model year vehicles (applying Tier 2 standards in-use is limited to the first three years after introduction of a vehicle).

TABLE S09–4—SCHEDULE FOR IN-USE LDV/LLDT DIURNAL PLUS HOT SOAK EVAPORATIVE EMISSION STANDARDS

Model Year of Introduction	2009	2010	2011
Models Years That Tier 2 Standards Apply to In-use Vehicles	2009 2010 2011	2010 2011 2012	2011 2012 2013

TABLE S09–5—SCHEDULE FOR IN-USE HLDT/MDPV DIURNAL PLUS HOT SOAK EVAPORATIVE EMISSION STANDARDS

Model Year of Introduction	2010	2011	2012
Models Years That Tier 2 Standards Apply to In-use Vehicles	2010 2011 2012	2011 2012 2013	2012 2013 2014

[72 FR 8562, Feb. 26, 2007; 72 FR 13352, Mar. 21, 2007, as amended at 76 FR 39521, July 6, 2011]

§ 86.1811–10 Emission standards for light-duty vehicles, light-duty trucks and medium-duty passenger vehicles.

Section 86.1811–10 includes text that specifies requirements that differ from §§ 86.1811–04 and 86.1811–09. Where a paragraph in § 86.1811–04 or § 86.1811–09 is identical and applicable to § 86.1811–10, this may be indicated by specifying the corresponding paragraph and the statement ''[Reserved]. For guidance see § 86.1811–04'' or ''[Reserved]. For guidance see § 86.1811–09.'' Where a corresponding paragraph of § 86.1811–04 or § 86.1811–09 is not applicable, this is indicated by the statement ''[Reserved]''

(a) [Reserved]. For guidance see § 86.1811–09.

(b) through (d) [Reserved]. For guidance see § 86.1811–04.

(e) [Reserved]. For guidance see § 86.1811–09.

(f) [Reserved]. For guidance see § 86.1811–04.

(g) *Cold temperature exhaust emission standards.* (1) Cold temperature CO standards. These cold temperature CO standards are applicable only to gasoline fueled LDV/Ts and MDPVs. Cold temperature CO exhaust emission standards apply over a useful life of 50,000 miles or 5 years (whichever occurs first) as follows:

(i) For LDVs and LDT1s, the standard is 10.0 grams per mile CO.

(ii) For LDT2s, LDT3s and LDT4s, and MDPVs, the standard is 12.5 grams per mile CO.

(iii) These standards do not apply to interim non-Tier 2 MDPVs.

(2) *Cold temperature NMHC standards.* Full useful life fleet average cold temperature NMHC standards are applicable only to gasoline fueled LDV/LLDTs and HLDT/MDPVs, and apply equally to certification and in-use except as otherwise specified in paragraph (u) of this section for in-use standards for applicable phase-in models. Testing with other fuels such as E85, or testing on diesel vehicles, is not required. Multi-fuel, bi-fuel or dual-fuel vehicles must comply with requirements using gasoline only. For LDV/LLDTs, the useful life is 120,000 miles or 10 years, whichever comes first. For HLDT/MDPVs, the useful life is 120,000 miles or 11 years, whichever comes first. There is not an intermediate useful life standard for cold temperature NMHC standards.

(i) The standards are shown in the following table:

TABLE S10–1—FLEET AVERAGE COLD TEMPERATURE NMHC FULL USEFUL LIFE EXHAUST EMISSION STANDARDS

Vehicle weight category	Cold temperature NMHC sales-weighted fleet average standard (grams/mile)
LDVs & LLDTs (≤6,000 lbs GVWR)	0.3

TABLE S10–1—FLEET AVERAGE COLD TEMPERATURE NMHC FULL USEFUL LIFE EXHAUST EMISSION STANDARDS—Continued

Vehicle weight category	Cold temperature NMHC sales-weighted fleet average standard (grams/mile)
HLDTs (>6,000–8,500 lbs GVWR) & MDPVs (>8,500–10,000 lbs GVWR)	0.5

(ii) The manufacturer must calculate its fleet average cold temperature NMHC emission level(s) as described in § 86.1864–10(m).

(iii) During a phase-in year, the manufacturer must comply with the fleet average standards for the required phase-in percentage for that year as specified in paragraph (g)(3) of this section, or for the alternate phase-in percentage as permitted under paragraph (g)(4) of this section.

(iv) For model years prior to 2010 (LDV/LLDTs) and 2012 (HLDT/MDPVs), where the manufacturer desires to bank early NMHC credits as permitted under § 86.1864–10(o)(5), the manufacturer must achieve a fleet average standard below the applicable standard. Manufacturers must determine compliance with the cold temperature NMHC fleet average standard according to § 86.1864–10(o).

(3) *Phase-in of the cold temperature NMHC standards.* Except as permitted in § 86.1811–04(k)(5)(vi) and (vii) regarding small volume manufacturers, manufacturers must comply with the phase-in requirements in Tables S10–2 and S10–3. Separate phase-in schedules are provided for LDV/LLDTs and for HLDT/MDPVs. These requirements specify the minimum percentage of the manufacturer's LDV/LLDT and HLDT/MDPV 50-State sales, by model year, that must meet the fleet average cold temperature NMHC standard for their full useful lives. LDVs and LLDTs must be grouped together to determine compliance with these phase-in requirements, and HLDTs and MDPVs must also be grouped together to determine compliance with these phase-in requirements. Tables S10–2 and S10–3 follow:

TABLE S10–2—PHASE-IN PERCENTAGES FOR LDV/LLDT COLD TEMPERATURE NMHC REQUIREMENTS

Model year	Percentage of LDV/LLDTs that must meet requirement
2010	25
2011	50
2012	75
2013 and subsequent	100

TABLE S10–3—PHASE-IN PERCENTAGES FOR HLDT/MDPV COLD TEMPERATURE NMHC REQUIREMENTS

Model year	Percentage of HLDT/MDPVs that must meet requirement
2012	25
2013	50
2014	75
2015 and subsequent	100

(4) *Alternate phase-in schedules for cold temperature NMHC standards.* (i) Manufacturers may apply for alternate phase-in schedules that would still result in 100% phase-in by 2013 and 2015, respectively, for LDV/LLDTs and HLDT/MDPVs. An alternate phase-in schedule submitted by a manufacturer is subject to EPA approval. The alternate phase-in will not be used to delay full implementation past the last year of the primary phase-in schedule (2013 for LDV/LLDTs, 2015 for HLDT/MDPVs). An alternate phase-in schedule will be acceptable if it satisfies the following conditions (where API = Anticipated Phase-In percentage for the referenced model year):

LDV/LLDTs:

$(6 \times API_{2008}) + (5 \times API_{2009}) + (4 \times API_{2010}) + (3 \times API_{2011}) + (2 \times API_{2012}) + (1 \times API_{2013}) \geq 500\%$, and $(6 \times API_{2008}) + (5 \times API_{2009}) + (4 \times API_{2010}) \geq 100\%$

HLDT/MDPVs:

$(6 \times API_{2010}) + (5 \times API_{2011}) + (4 \times API_{2012}) + (3 \times API_{2013}) + (2 \times API_{2014}) + (1 \times API_{2015}) \geq 500\%$, and $(6 \times API_{2010}) + (5 \times API_{2011}) + (4 \times API_{2012}) \geq 100\%$,

or

$(6 \times API_{2010}) + (5 \times API_{2011}) + (4 \times API_{2012}) + (3 \times API_{2013}) + (2 \times API_{2014}) + (1 \times API_{2015}) \geq 600\%$

(ii)(A) For LDV/LLDTs, if the sum of products in paragraph (g)(4)(i) of this section is greater than or equal to

500%, which is the sum of products from the primary phase-in schedule (4 × 25% + 3 × 50% + 2 × 75% + 1 × 100% = 500%), then the alternate phase-in schedule is acceptable, except as prohibited in paragraphs (g)(4)(i) and (iii) of this section. In addition, manufacturers electing to use an alternate phase-in schedule for compliance with the cold temperature NMHC exhaust emission standards must ensure that the sum of products is at least 100% for model years 2010 and earlier for LDV/LLDTs. For example, a phase-in schedule for LDV/LLDTs of 5/10/10/45/80/100 that begins in 2008 would calculate as (6 × 5%) + (5 × 10%) + (4 × 10%) = 120% and would be acceptable for 2008–2010. The full phase-in would calculate as (6 × 5%) + (5 × 10%) + (4 × 10%) + (3 × 45%) + (2 × 80%) + (1 × 100%) = 515% and would be acceptable for 2008–2013.

(B) For HLDT/MDPVs, if the sum of products in paragraph (g)(4)(i) of this section is greater than or equal to 500%, which is the sum of products from the primary phase-in schedule (4 × 25% + 3 × 50% + 2 × 75% + 1 × 100% = 500%), then the alternate phase-in schedule is acceptable, except as prohibited in paragraphs (g)(4)(i) and (iii) of this section. In addition, manufacturers electing to use an alternate phase-in schedule for compliance with the cold temperature NMHC exhaust emission standards must ensure that the sum of products is at least 100% for model years 2012 and earlier for HLDT/MDPVs. Alternately, if the sum of products is greater than or equal to 600%, then the alternate phase-in schedule is acceptable, except as prohibited in paragraphs (g)(4)(i) and (iii) of this section. If the sum of products is greater than or equal to 600%, then there are no requirements on the sum of products for model years 2012 and earlier.

(iii) Under an alternate phase-in schedule, the projected phase-in percentage is not binding for a given model year, provided the sums of the actual phase-in percentages that occur meet the appropriate total sums as required in the equations of paragraph (g)(4)(i) of this section, and provided that 100% actual compliance is reached for the appropriate model year, either 2013 for LDV/LLDTs or 2015 for HLDT/MDPVs.

(5) Manufacturers must determine compliance with required phase-in schedules as follows:

(i) Manufacturers must submit information showing compliance with all phase-in requirements of this section with their Part I applications as required by §86.1844(d)(13).

(ii) A manufacturer electing to use any alternate phase-in schedule permitted under this section must provide in its Application for Certification for the first year in which it intends to use such a schedule, and in each succeeding year during the phase-in, the intended phase-in percentages for that model year and the remaining phase-in years along with the intended final sum of those percentages as described in paragraph (g)(4)(i) of this section. This information may be included with the information required under §86.1844–01(d)(13). In its year end annual reports, as required under §86.1844–01(e)(4), the manufacturer must include sufficient information so that the Administrator can verify compliance with the alternate phase-in schedule established under paragraph (g)(4)(i) of this section.

(6)(i) Sales percentages for the purpose of determining compliance with the phase-in of the cold temperature NMHC requirements must be based upon projected 50-State sales of LDV/LLDTs and HLDT/MDPVs of the applicable model year by the manufacturer to the point of first sale. Such sales percentages must be rounded to the nearest 0.1 percent.

(ii) Alternatively, the manufacturer may petition the Administrator to allow actual volume produced for U.S. sales to be used in lieu of projected U.S. sales for purposes of determining compliance with the phase-in percentage requirements under this section. The manufacturer must submit its petition within 30 days of the end of the model year. For EPA to approve the use of actual volume produced for U.S. sales, the manufacturer must establish to the satisfaction of the Administrator, that actual production volume is functionally equivalent to actual sales volume of LDV/LLDTs and HLDT/MDPVs sold in all 50 U.S. States.

(h) through (s) [Reserved]. For guidance see § 86.1811–04.

(t) [Reserved]. For guidance see § 86.1811–09.

(u) *Cold temperature NMHC exhaust emission in-use standards for applicable phase-in models.* An interim full useful life in-use compliance standard is calculated by adding 0.1 g/mi to the FEL to which each test group is newly certified, and applies to that test group only for the model years shown in Tables S10–4 and S10–5. Otherwise, the in-use standard is the certification standard from paragraph (g)(2) of this section. The standards apply for purposes of in-use testing only and does not apply to certification or Selective Enforcement Auditing. Tables S10–4 and S10–5 follow:

TABLE S10–4—IN-USE STANDARDS FOR APPLICABLE PHASE-IN LDV/LLDTS

Model Year of Introduction	2008	2009	2010	2011	2012	2013
Models years that the interim in-use standard is available	2008 2009 2010 2011	2009 2010 2011 2012	2010 2011 2012 2013	2011 2012 2013	2012 2013 2014	2013 2014

TABLE S10–5—IN-USE STANDARDS FOR APPLICABLE PHASE-IN HLDT/MDPVS

Model Year of Introduction	2010	2011	2012	2013	2014	2015
Models years that the interim in-use standard is available	2010 2011 2012 2013	2011 2012 2013 2014	2012 2013 2014 2015	2013 2014 2015	2014 2015 2016	2015 2016

[72 FR 8564, Feb. 26, 2007]

§ 86.1811–17 Exhaust emission standards for light-duty vehicles, light-duty trucks and medium-duty passenger vehicles.

(a) *Applicability and general provisions.* This section describes exhaust emission standards that apply for model year 2017 and later light-duty vehicles, light-duty trucks, and medium-duty passenger vehicles. MDPVs are subject to all the same emission standards and certification provisions that apply to LDT4. Some of the provisions of this section also apply to heavy-duty vehicles as specified in § 86.1816. See § 86.1818 for greenhouse gas emission standards. See § 86.1813 for evaporative and refueling emission standards. This section may apply to vehicles from model years earlier than 2017 as specified in paragraph (b)(11) of this section.

(b) *Tier 3 exhaust emission standards.* Exhaust emissions may not exceed the Tier 3 exhaust emission standards, as follows:

(1) Measure emissions using the chassis dynamometer procedures of 40 CFR part 1066, as follows:

(i) Establish appropriate load settings based on loaded vehicle weight (see § 86.1803).

(ii) Use appropriate driving schedules. Measurements involve testing over multiple driving schedules. The Federal Test Procedure (FTP) is based on testing with the Urban Dynamometer Driving Schedule (UDDS). The Supplemental Federal Test Procedure (SFTP) involves testing with the UDDS, the US06 driving schedule, and the SC03 driving schedule. See 40 CFR 1066.801 for further information on these test cycles.

(iii) Calculate SFTP emissions as a composite of test results over the driving schedules identified in paragraph (b)(1)(ii) of this section based on the following calculation:

$$\text{SFTP (g/mi)} = 0.35 \times \text{FTP} + 0.28 \times \text{US06} + 0.37 \times \text{SC03}$$

(A) For test vehicles that do not have air conditioning, you may omit SC03 testing. To calculate composite SFTP emissions for such vehicles, use FTP emission results to substitute for the SC03 value in the equation.

(B) You may also use FTP emission results to substitute for the SC03 value

in the equation for the types of vehicles identified in 40 CFR 600.115 that automatically qualify for the derived 5-cycle method for determining fuel economy label values. Such vehicles remain subject to the SFTP standard when tested over the SC03 driving schedule. Other vehicles remain subject to the litmus-test provisions in 40 CFR 600.115.

(iv) Use E10 test fuel as required in §86.113, except as specified in this section.

(v) Hydrocarbon emission standards are expressed as NMOG; however, for certain vehicles you may measure exhaust emissions based on nonmethane hydrocarbon instead of NMOG as described in 40 CFR 1066.635.

(vi) Measure emissions from hybrid electric vehicles (including plug-in hybrid electric vehicles) as described in 40 CFR part 1066, subpart F, except that these procedures do not apply for plug-in hybrid electric vehicles during charge-depleting operation.

(2) Table 1 of this section describes fully phased-in Tier 3 standards that apply as specified in this paragraph (b) for the identified driving schedules. The FTP standards for NMOG + NO_X apply on a fleet-average basis using discrete bin standards as described in paragraph (b)(4) of this section. The bin standards include additional emission standards for high-altitude testing and for CO emissions when testing over the FTP driving schedule. The SFTP standards for NMOG + NO_X apply on a fleet-average basis as described in paragraph (b)(5) of this section. Table 1 follows:

TABLE 1 OF §86.1811–17—FULLY PHASED-IN TIER 3 EXHAUST EMISSION STANDARDS (g/mile)

NMOG + NO_X		PM		CO	Formaldehyde
FTP [1]	SFTP	FTP	US06	SFTP	FTP
0.030	0.050	0.003	0.006	4.2	0.004

[1] The fleet-average FTP emission standard for NMOG + NO_X is 0.026 g/mile for LDV and LDT1 test groups certified to standards based on a useful life of 120,000 miles or 10 years in a given model year.

(3) The FTP standards specified in this section apply for testing at low-altitude conditions and high-altitude conditions as specified in paragraph (b)(4) of this section. The SFTP standards specified in paragraph (b)(2) of this section apply only for testing at low-altitude conditions.

(4) The FTP emission standard for NMOG + NO_X is based on a fleet average for a given model year. You must specify a family emission limit (FEL) for each test group. The FEL serves as the emission standard for the test group with respect to all required FTP testing. Calculate your fleet-average emission level as described in §86.1860 based on the FEL that applies for low-altitude testing to show that you meet the specified standard. For multi-fueled vehicles, calculate fleet-average emission levels based only on emission levels for testing with gasoline or diesel fuel. You may generate emission credits for banking and trading and you may use banked or traded credits as described in §86.1861 for demonstrating compliance with the FTP emission standard for NMOG + NO_X. You comply with the emission standard for a given model year if you have enough credits to show that your fleet-average emission level is at or below the applicable standard. You may exchange FTP credits between or among any test groups subject to standards under this section. You may not exchange FTP and SFTP credits.

(i) Specify one of the identified values from Table 2 of this section as the FEL for demonstrating that your fleet-average emission level complies with the FTP emission standard for NMOG + NO_X under low-altitude conditions. These FEL values define emission bins that also determine corresponding emission standards for NMOG + NO_X emissions under high-altitude conditions, and for CO emissions, as follows:

TABLE 2 OF § 86.1811–17—TIER 3 FTP BIN STANDARDS

[g/mile]

FEL Name	NMOG + NO_X FELs for low altitude	NMOG + NO_X for high altitude	CO for low and high altitude
Bin 160	0.160	0.160	4.2
Bin 125	0.125	0.160	2.1
Bin 70	0.070	0.105	1.7
Bin 50	0.050	0.070	1.7
Bin 30	0.030	0.050	1.0
Bin 20	0.020	0.030	1.0
Bin 0	0.000	0.000	0.0

(ii) Manufacturers earn a compliance credit of 0.005 g/mile NMOG + NO_X for vehicles that are certified for a useful life of 150,000 miles or 15 years and that are covered by an extended warranty over the same period for all components whose failure triggers MIL illumination. Manufacturers may apply the compliance credit as follows:

(A) You may reduce your official FTP emission result for certification by the amount of the compliance credit if that allows you to certify to a more stringent bin. In that case, you may use the more stringent bin standard for calculating the fleet-average NMOG + NO_X emission level. For any compliance testing with these vehicles, the applicable FTP bin standard for NMOG + NO_X is higher than the specified bin standard by the amount of the compliance credit. For example, if the official FTP emission result for NMOG + NO_X is 0.052 g/mile, this qualifies for an FEL of 0.050 g/mile for calculating the fleet average and the vehicle is subject to an FTP bin standard of 0.055 g/mile.

(B) If the amount of the compliance credit does not allow you to certify to a more stringent bin, calculate the fleet-average NMOG + NO_X emission level using an FEL for these vehicles that is smaller than the bin standard by the amount of the compliance credit. For any compliance testing with these vehicles, the specified bin standard applies. For example, if the official FTP emission result for NMOG + NO_X is 0.038 g/mile, calculate the fleet-average NMOG + NO_X emission level by specifying an FEL of 0.045 g/mile; these vehicles are subject to the specified FTP bin standard of 0.050 g/mile.

(iii) If you qualify for a compliance credit for direct ozone reduction under the LEV III program, you may apply the compliance credit approved for California vehicles as described in paragraphs (b)(4)(ii)(A) and (B) of this section.

(iv) You may combine the adjustments in paragraphs (b)(4)(ii) and (iii) of this section if you qualify for them separately.

(5) The SFTP emission standard for NMOG + NO_X is also based on a fleet average in a given model year. You must specify FELs as described in paragraph (b)(4) of this section and calculate a fleet-average emission level to show that you meet the SFTP emission standard for NMOG + NO_X, except that you may specify FELs in any even increment of 0.010 g/mile up to a maximum value of 0.180 g/mile. You may generate emission credits for banking and trading and you may use banked or traded credits as described in § 86.1861 for demonstrating compliance with the SFTP emission standard for NMOG + NO_X. You comply with the emission standard for a given model year if you have enough credits to show that your fleet-average emission level is at or below the applicable standard. You may exchange SFTP credits between or among any test groups subject to standards under this section. You may not exchange FTP and SFTP credits. The SFTP standards described in this section apply only for testing at low-altitude conditions.

(6) The full Tier 3 program includes new emission standards for NMOG + NO_X, PM, CO, and formaldehyde; it also includes measurement with a new test fuel and a longer useful life (for some vehicles). Vehicles meeting all these requirements are considered Final Tier 3 vehicles. Vehicles that do not meet

all the Tier 3 requirements are considered Interim Tier 3 vehicles. Paragraphs (b)(7) through (13) of this section describe how to comply with standards during a phase-in period.

(7) The Tier 3 PM standards phase in over several years. The following provisions describe the primary approach for phasing in the Tier 3 PM standards:

(i) You must meet the FTP and the US06 PM standards with 20, 20, 40, 70, and 100 percent of your projected nationwide sales of all vehicles subject to this section in model years 2017 through 2021, respectively. In model years 2017 and 2018, an interim US06 PM standard of 0.010 g/mile applies. Each vehicle meeting the Tier 3 FTP standard for PM must also meet the Tier 3 US06 standard for PM. In model year 2017, the phase-in requirement applies only for vehicles at or below 6,000 pounds GVWR; however, you may meet an alternative phase-in requirement of 10 percent in model year 2017 based on your full production of vehicles subject to standards under this section.

(ii) You may disregard the phase-in percentages specified in paragraph (b)(7)(i) of this section if you instead comply with an indexed PM phase-in schedule as described in this paragraph (b)(7)(ii). To do this, you must notify us of your intent before January 1, 2017, and include a detailed plan for complying with the indexed phase-in schedule. You comply with the indexed phase-in schedule by calculating a PM phase-in index at or above 540 using the following equation for model years 2017 through 2021:

$$\text{PM phase-in index} = 5 \cdot APP_{2017} + 4 \cdot APP_{2018} + 3 \cdot APP_{2019} + 2 \cdot APP_{2020} + APP_{2021}$$

Where:

APP = The phase-in percentage of vehicles meeting the Tier 3 PM standards for the indicated model year, based on actual sales, as described in paragraph (b)(7)(i) of this section.

(iii) Vehicles meeting the Tier 3 PM standards must meet those standards over the useful life as specified in §86.1805. Note that Interim Tier 3 vehicles may have different useful life values for PM emission standards than for other emission standards.

(iv) Any vehicles not included for demonstrating compliance with the Tier 3 PM phase-in requirement must instead comply with an FTP emission standard for PM of 0.010 g/mile, and a composite SFTP emission standard for PM of 0.070 g/mile.

(v) Measure PM emissions from all vehicles using the same test fuel specified in paragraph (b)(8) of this section for measuring NMOG + NO_X emissions.

(vi) You may certify Interim Tier 3 vehicles based on carryover data.

(vii) You may use the alternative phase-in provisions described in paragraph (b)(9) of this section to transition to the Tier 3 exhaust emission standards on a different schedule.

(8) The following provisions describe the primary approach for phasing in the Tier 3 standards other than PM in 2025 and earlier model years:

(i) *FTP phase-in.* The fleet-average FTP emission standard for NMOG + NO_X phases in over several years as described in this paragraph (b)(8)(i). You must identify FELs as described in paragraph (b)(4) of this section and calculate a fleet-average emission level to show that you meet the FTP emission standard for NMOG + NO_X that applies for each model year. For model year 2017, do not include vehicles above 6,000 pounds GVWR. Through model year 2019, you may also certify to transitional Bin 85 or Bin 110 standards, which consist of all-altitude FTP emission standards for NMOG + NO_X of 0.085 or 0.110 g/mile, respectively; additional FTP standards for PM, CO, and formaldehyde apply as specified in this section for vehicles certified to Bin 125 standards. Fleet-average FTP emission standards decrease through the phase-in period as shown in the following table:

TABLE 3 OF § 86.1811–17—DECLINING FLEET-AVERAGE TIER 3 FTP EMISSION STANDARDS FOR NMOG + NO_X (g/mile)

Model year	LDV, LDT1—150,000 mile useful life [1]	LDV, LDT1—120,000 mile useful life [1]	LDT2, HLDT
2017 [2]	0.086	0.073	0.101
2018	0.079	0.067	0.092
2019	0.072	0.061	0.083
2020	0.065	0.055	0.074
2021	0.058	0.049	0.065
2022	0.051	0.043	0.056
2023	0.044	0.037	0.047
2024	0.037	0.031	0.038
2025	0.030	0.026	0.030

[1] Vehicles certified to standards based on a useful life of 120,000 miles may comply based on the fleet-average standard specified for 150,000 mile useful life in certain circumstances as specified in paragraph (b)(8)(iii)(A) of this section.
[2] HLDT and MDPV must meet the Tier 3 standards starting with model year 2018.

(ii) *SFTP phase-in*. The fleet-average SFTP emission standard for NMOG + NO_X phases in over several years as described in this paragraph (b)(8)(ii). You must identify FELs as described in paragraph (b)(5) of this section and calculate a fleet-average emission level to show that you meet the SFTP emission standard for NMOG + NO_X that applies for each model year.

(A) Calculate the fleet-average emission level together for all your light-duty vehicles and light-duty trucks, except for those certified using the provisions of paragraph (b)(8)(ii)(C) of this section. For model year 2017, do not include vehicles above 6,000 pounds GVWR (in the numerator or denominator).

(B) Fleet-average SFTP emission standards decrease through the phase-in period as shown in the following table:

TABLE 4 OF § 86.1811–17—DECLINING FLEET-AVERAGE TIER 3 SFTP EMISSION STANDARDS

Model year	NMOG + NO_X (g/mile)
2017 [1]	0.103
2018	0.097
2019	0.090
2020	0.083
2021	0.077
2022	0.070
2023	0.063
2024	0.057
2025	0.050

[1] HLDT and MDPV must meet the Tier 3 standards starting with model year 2018.

(C) You may use the SFTP stand-alone option specified in 13 CCR 1961.2 (a)(7)(A)1 of the LEV III program to demonstrate compliance with EPA's SFTP standards. Do not include any such test groups when demonstrating compliance with the phased-in fleet-average SFTP standards specified in this paragraph (b)(8)(ii). Note that this option is not available for vehicles certified to the transitional bins described in paragraph (b)(8)(i) of this section.

(iii) *Interim provisions*. (A) For vehicles certified to bins higher than Bin 70 under this section through model year 2019, the Tier 2 useful life period applies as specified in § 86.1805–12 for all criteria pollutants other than PM. However, LDV and LDT1 test groups certified to bin standards above Bin 70 through model year 2019 may be included in the same averaging set with vehicles meeting standards over a 150,000 mile useful life, notwithstanding the provisions of § 86.1861–17(b)(1)(iii). Any such vehicles you include in the averaging set for 150,000 mile useful life are also subject to the fleet-average NMOG + NO_X standard specified for 150,000 mile useful life; similarly, any such vehicles you include in the averaging set for 120,000 mile useful life are also subject to the fleet-average NMOG + NO_X standard specified for 120,000 mile useful life.

(B) You may use the E0 test fuel specified in § 86.113 through model year 2019 for gasoline-fueled vehicles certified to bins higher than Bin 70. You may not certify these vehicles using carryover data after model year 2019.

(C) Vehicles must comply with the Tier 2 SFTP emission standards for NMHC + NO_X and CO for 4,000-mile

testing that are specified in §86.1811–04(f)(1) if they are certified to transitional Bin 85 or Bin 110 standards, or if they are certified based on a fuel without ethanol, or if they are not certified to the Tier 3 p.m. standard. Note that these standards apply under this section for alternative fueled vehicles, for flexible fueled vehicles when operated on a fuel other than gasoline or diesel fuel, and for MDPVs, even though these vehicles were not subject to the SFTP standards in the Tier 2 program.

(iv) You may use the alternative phase-in provisions described in paragraph (b)(9) of this section to transition to the Tier 3 exhaust emission standards on a different schedule.

(9) This paragraph (b)(9) describes an alternative approach to phasing in the Tier 3 emission standards for vehicles above 6,000 pounds GVWR. If you choose this approach, you must phase in the Tier 3 standards for all your vehicles above 6,000 pounds GVWR that are subject to this section according to this schedule. Under this alternative phase-in, you must meet the fully phased-in standards specified in this paragraph (b) with 40, 70, and 100 percent of your projected nationwide sales of all vehicles above 6,000 pounds GVWR that are subject to this section in model years 2019 through 2021, respectively. Any vehicles not subject to Tier 3 standards during the phase-in period must continue to comply with the Tier 2 standards in §86.1811–04(c) and (f), including the Tier 2 SFTP emission standards for NMHC + NO_X and CO for 4,000-mile testing as specified in §86.1811–04(f)(1). Vehicles subject to Tier 2 standards under this paragraph (b)(9) are subject to the useful life provisions in §86.1805–12 relative to exhaust emission standards. Each vehicle counting toward the phase-in percentage under this paragraph (b)(9) must meet all the standards that apply throughout the useful life as specified in §86.1805–17, and must use the Tier 3 test fuel specified in §86.113–15. The following exceptions and special provisions apply under this paragraph (b)(9):

(i) For model year 2019, you may exclude from the phase-in calculation any test groups with vehicles above 6,000 pounds GVWR that have a Job 1 date on or before March 3, 2018 (see 40 CFR 85.2304).

(ii) The FTP and SFTP emission standards for NMOG + NO_X are fleet-average standards. Calculate your fleet-average values based on all the vehicles that are subject to the standard in a given year. You may not generate credits for banking or trading in model years 2019 or 2020, and you may not use banked or traded credits to demonstrate compliance with the standards in those years.

(iii) The US06 emission standard for PM is 0.010 g/mile in model years 2019 through 2021, and 0.006 g/mile starting in model year 2022. The other standards described in this paragraph (b)(9) apply to all your vehicles above 6,000 pounds GVWR in model years 2022 through 2024.

(10) You may not use credits generated from Tier 2 vehicles for demonstrating compliance with the Tier 3 standards except as specified in this paragraph (b)(10). You may generate early credits with U.S. sales of Tier 2 vehicles in the two model years before the Tier 3 standards start to apply for a given vehicle model. Vehicles certified to the Tier 2 standards must meet all the Tier 2 requirements in §86.1811–10, including the fleet-average Tier 2 standards. Calculate early Tier 3 emission credits as described in §86.1861 by subtracting the appropriate Tier 2 fleet-average value for FTP emissions of NMOG + NO_X from 0.160 g/mile. Calculate your fleet-average value for the model year based on vehicles at or below 6,000 pounds GVWR in 2015, on all sizes of vehicles in 2016, and on vehicles above 6,000 pounds GVWR in 2017. You may use these early credits as described in §86.1861 for demonstrating compliance with the FTP emission standard for NMOG + NO_X starting in model year 2017. You may use these early credits interchangeably for vehicles certified based on a useful life of either 120,000 or 150,000 miles. For model years 2018 and later, you may use any remaining early credits for banking or trading subject to a limitation based on credits generated in California, as follows:

(i) For the applicable model years in which you generate emission credits relative to California's LEV III fleet-

average NMOG + NO_X standard, determine the actual California sales of light-duty vehicles and light-duty trucks and the actual nationwide sales of those same vehicles. (Note: If you have a credit deficit in a given model year for your LEV III vehicles, apply the provisions of this paragraph (b)(10)(i) based on the appropriate negative credit quantity.) In 2015, count sales only from vehicle models at or below 6,000 pounds GVWR. For each model year, multiply the credits generated under the California program by the ratio of nationwide vehicle sales to LEV III vehicle sales to calculate an effective nationwide quantity. Sum these results for model years 2015 through 2017. Note that this calculation results in a maximum credit quantity based on vehicle sales in all states, even though the initial credit calculation does not include vehicle sales in California or the section 177 states. If you comply with the LEV III standards based on pooled emission credits for California and the section 177 states, use those pooled emission credits and corresponding sales for calculating the maximum credit quantity under this paragraph (b)(10)(i).

(ii) You may not use more early credits generated under this paragraph (b)(10) for banking or trading to demonstrate compliance with Tier 3 emission standards than the calculated value of the effective nationwide credit quantity summed in paragraph (b)(10)(i) of this section. If your generated credits are greater than this threshold, determine the ratio by which your generated early credits exceed the threshold. Calculate an adjusted quantity of early credits generated under this paragraph (b)(10) by dividing the generated credit quantity from each model year by this ratio of generated credits relative to the applicable threshold. This adjusted quantity of credits may be used for banking or trading relative to the Tier 3 standards, subject to the five-year credit life described in § 86.1861.

(11) You may certify vehicles to the Tier 3 standards starting in model year 2015. To do this, you may either sell all your LEV III vehicle models nationwide, or you may certify a subset of your fleet to alternate fleet-average emission standards as follows:

(i) The alternate fleet-average FTP emission standards for NMOG + NO_X are 0.100 g/mile in 2015 and 0.093 g/mile in 2016 for LDV and LDT1.

(ii) The alternate fleet-average FTP emission standards for NMOG + NO_X are 0.119 g/mile in 2015, 0.110 g/mile in 2016, and 0.101 g/mile in 2017 for LDT2 and HLDT.

(iii) The alternate fleet-average SFTP emission standards for NMOG + NO_X are 0.140 in 2015 for all vehicles, 0.110 in 2016 for all vehicles, and 0.103 in 2017 for LDT2 and HLDT.

(iv) The vehicles must meet FTP and SFTP standards for PM as specified in § 86.1811–04. The PM testing provisions of § 86.1829–01(b)(1)(iii)(B) apply for these vehicles.

(v) Vehicles not certified to the Tier 3 standards in a given model year must meet all the requirements that apply for Tier 2 vehicles in that model year.

(vi) For cold temperature testing and for high-altitude testing, you may use the E0 fuel specified in § 86.113–04(a) or § 86.213 instead of the E10 test fuel specified in § 86.113–15.

(vii) Vehicles certified under this paragraph (b)(11) to a bin standard at or below Bin 70 must be certified to a useful life of 150,000 miles.

(viii) The interim provisions described in paragraph (b)(8)(iii) of this section apply for vehicles certified under this paragraph (b)(11), except that credits generated under this paragraph (b)(11) may be used interchangeably for vehicles certified based on a useful life of either 120,000 or 150,000 miles.

(ix) For vehicles certified under this paragraph (b)(11), you may generate emission credits and use those credits for demonstrating compliance with Tier 3 standards as described in paragraph (b)(10) of this section or as described in § 86.1861.

(12) The following alternate standards apply for in-use testing:

(i) Alternate in-use FTP standards for NMOG + NO_X apply for 2021 and earlier model year vehicles certified to Bin 70 and lower. Calculate these alternate standards by multiplying the applicable FEL by 1.4. These alternate

standards apply only for testing at low-altitude conditions.

(ii) The alternate in-use FTP standard for PM is 0.006 g/mile for 2021 and earlier model year vehicles.

(iii) The in-use US06 standard for PM is 0.010 g/mile for 2023 and earlier model year vehicles.

(13) Keep records as needed to show that you meet the requirements specified in this paragraph (b) for phasing in standards and for complying with declining fleet-average average standards.

(14) This subpart describes several ways that the transition to Final Tier 3 standards applies differently for vehicles above and below 6,000 pounds GVWR. All these distinctions apply only for LDT. LDV as a category is defined independent of GVWR, so any LDV above 6,000 pounds GVWR are subject to the same provisions that apply for LDV at or below 6,000 pounds GVWR. Where this section refers to ''vehicles above 6,000 pounds GVWR,'' this should be understood to include LDT above 6,000 pounds GVWR and MDPV (or HLDT and MDPV), and to exclude all LDV.

(c) *Highway NMOG + NO_X exhaust emission standard.* NMOG + NO_X emissions measured on the federal Highway Fuel Economy Test in 40 CFR 1066.840 may not exceed the applicable FTP bin standard for NMOG + NO_X. Demonstrate compliance with this standard for low-mileage vehicles by applying the appropriate deterioration factor. For vehicles not certified to any Tier 3 emission standards specified in paragraph (b) of this section, the provisions of §86.1811–04(j) apply instead of this paragraph (c).

(d) *Special provisions for Otto-cycle engines.* The special provisions described in this paragraph (d) apply for vehicles with Otto-cycle engines. For vehicles not certified to any Tier 3 emission standards, the provisions of §86.1810–01(i)(6), (i)(13), and (i)(14) apply instead of this paragraph (d).

(1) *Enrichment limits.* The nominal air-fuel ratio throughout the US06 cycle may not be richer than the leanest air-fuel mixture required for lean best torque, except as allowed under paragraph (d)(2) of this section. Unless we approve otherwise in advance, lean best torque is the leanest air-fuel ratio required at any speed and load point with a fixed spark advance to make peak torque. The allowable tolerance around the nominal value for any given speed and load point over the US06 cycle for a particular vehicle is 4 percent, which is calculated as the nominal mass-based air-fuel ratio for lean best torque divided by 1.04.

(2) *Engine protection.* AECDs that use commanded enrichment to protect the engine or emission control hardware must not use enrichment more frequently or to a greater degree than is needed for this purpose. For purposes of this section, commanded enrichment includes intended engine operation at air-fuel ratios rich of stoichiometry, except the following:

(i) Cycling back and forth in a narrow window between rich and lean operation as a result of feedback controls targeted to maintain overall engine operation at stoichiometry.

(ii) Small changes in the target air-fuel ratio to optimize vehicle emissions or drivability. This may be called ''closed-loop biasing.''

(iii) Temporary enrichment in response to rapid throttle motion.

(iv) Enrichment during cold-start and warm-up conditions.

(v) Temporary enrichment for running OBD checks to comply with §86.1806.

(3) *A/C-on specific calibrations.* (i) A/C-on specific calibrations (e.g., air-fuel ratio, spark timing, and exhaust gas recirculation) that differ from A/C-off calibrations may be used for a given set of engine operating conditions (e.g., engine speed, manifold pressure, coolant temperature, air charge temperature, and any other parameters). Such calibrations must not unnecessarily reduce emission control effectiveness during A/C-on operation when the vehicle is operated under conditions that may reasonably be expected during normal operation and use. If emission control effectiveness decreases as a result of such calibrations, the manufacturer must describe in the Application for Certification the circumstances under which this occurs and the reason for using these calibrations.

(ii) For AECDs involving commanded enrichment, these AECDs must not operate differently for A/C-on operation than for A/C-off operation, except as provided under paragraph (d)(2) of this section. This includes both the sensor inputs for triggering enrichment and the degree of enrichment employed.

(4) ''*Lean-on-cruise*'' *calibration strategies*. Manufacturers may use ''lean-on-cruise'' strategies subject to the following specifications:

(i) A ''lean-on-cruise'' strategy is defined as the use of an air-fuel ratio significantly leaner than stoichiometry during non-deceleration conditions at speeds above 40 mph.

(ii) You must not employ ''lean-on-cruise'' strategies during vehicle operation in normal driving conditions, including A/C usage, unless at least one of the following conditions is met:

(A) Such strategies are substantially employed during the FTP, US06, or SC03 duty cycle.

(B) Such strategies are demonstrated not to significantly reduce vehicle emission control effectiveness over the operating conditions in which they are employed.

(C) Such strategies are demonstrated to be necessary to protect the vehicle occupants, engine, or emission control hardware.

(iii) If you propose to use a ''lean-on-cruise'' strategy, you must describe in the application for certification the circumstances under which such a calibration would be used and the reasons for using it.

(e) through (f) [Reserved]

(g) *Cold temperature exhaust emission standards*. The standards in this paragraph (g) apply for certification and in-use vehicles tested over the test procedures specified in subpart C of this part. These standards apply only to gasoline-fueled vehicles. Multi-fuel, bi-fuel or dual-fuel vehicles must comply with requirements using gasoline only. Testing with other fuels such as a high-level ethanol-gasoline blend, or testing on diesel vehicles, is not required.

(1) *Cold temperature CO standards*. Cold temperature CO exhaust emission standards apply for testing at both low-altitude conditions and high-altitude conditions as follows:

(i) For LDV and LDT1, the standard is 10.0 g/mile CO.

(ii) For LDT2, LDT3 and LDT4, the standard is 12.5 grams per mile CO.

(2) *Cold temperature NMHC standards*. The following fleet average cold temperature NMHC standards apply as follows:

(i) The standards are shown in the following table:

TABLE 5 OF § 86.1811–17—FLEET AVERAGE COLD TEMPERATURE NMHC EXHAUST EMISSION STANDARDS

Vehicle weight category	Cold temperature NMHC sales-weighted fleet average standard (g/mile)
LDV and LLDT	0.3
HLDT	0.5

(ii) The manufacturer must calculate its fleet average cold temperature NMHC emission level(s) as described in § 86.1864–10(m).

(iii) The standards specified in this paragraph (g)(2) apply only for testing at low-altitude conditions. However, manufacturers must submit an engineering evaluation indicating that common calibration approaches are utilized at high altitudes. Any deviation from low altitude emission control practices must be included in the auxiliary emission control device (AECD) descriptions submitted at certification. Any AECD specific to high altitude must require engineering emission data for EPA evaluation to quantify any emission impact and validity of the AECD.

(h) *Small-volume manufacturers*. Small-volume manufacturers may use the following Tier 3 phase-in provisions:

(1) Instead of the fleet-average FTP standards for NMOG + NO_X specified in this section, small-volume manufacturers may meet alternate fleet-average standards of 0.125 g/mile through model year 2021, and 0.051 g/mile for model years 2022 through 2027. The following additional provisions apply for vehicles certified under this paragraph (h)(1):

(i) Vehicles are subject to exhaust emission standards over the useful life as specified in § 86.1805–12 through

model year 2021, and as specified in this section starting in model year 2022.

(ii) Gasoline-fueled vehicles may use the E0 test fuel specified in § 86.113–04 for vehicles certified to bins higher than Bin 70 through model year 2021.

(iii) Vehicles certified under this paragraph (h)(1) may generate emission credits and they may use banked or traded emission credits relative to the alternate fleet-average FTP standard for NMOG + NO_X only in model years 2022 through 2027.

(iv) Vehicles are subject to all the other requirements specified in this section.

(2) Small-volume manufacturers may delay complying with all the requirements of this section until model year 2022, and instead meet all the requirements that apply to Tier 2 vehicles under § 86.1811–10 for 2021 and earlier model years.

(3) If meeting the Tier 3 standards would cause severe economic hardship, small-volume manufacturers may ask us to approve an extended compliance deadline under the provisions of 40 CFR 1068.250, except that the solvency criterion does not apply and there is no maximum duration of the hardship relief.

[79 FR 23713, Apr. 28, 2014, as amended at 80 FR 9105, Feb. 19, 2015; 81 FR 73984, Oct. 25, 2016]

§ 86.1813–17 Evaporative and refueling emission standards.

Vehicles must meet evaporative and refueling emission standards as specified in this section. These standards apply for heavy duty vehicles above 14,000 pounds GVWR as specified in § 86.1801. The emission standards apply for total hydrocarbon equivalent (THCE) measurements using the test procedures specified in subpart B of this part, as appropriate. Note that § 86.1829 allows you to certify without testing in certain circumstances. Except as specified in paragraph (b) of this section, evaporative and refueling emission standards do not apply for diesel-fueled vehicles. Unless otherwise specified, MDPVs are subject to all the same provisions of this section that apply to LDT4.

(a) *Tier 3 evaporative emission standards.* Vehicles may not exceed the Tier 3 evaporative emission standards, as follows:

(1) Measure emissions using the test procedures of subpart B of this part, as follows:

(i) Follow the vehicle preconditioning and exhaust testing procedures as described in subpart B of this part.

(ii) Measure diurnal, running loss, and hot soak emissions as shown in § 86.130. This includes separate measurements for the two-diurnal test sequence and the three-diurnal test sequence; however, gaseous-fueled vehicles are not subject to any evaporative emission standards using the two-diurnal test sequence.

(iii) For gasoline-fueled vehicles, use E10 test fuel as required in § 86.113, except as specified in this section.

(iv) Emissions are generally measured with a flame ionization detector (FID). In the case of rig, diurnal, hot soak, and running loss testing with E10 test fuel, multiply measured (unspeciated) FID values by 1.08 to account for the FID's reduced response to ethanol. However, you may instead determine total hydrocarbon equivalent for E10 testing based on speciated measurements as described in § 86.143–96(c). You may use different methods (with or without speciation) for different test elements for a given test vehicle; however, you must always use the same method for diurnal and hot soak testing. In addition, any later testing with vehicles from that evaporative/refueling family must use the same method that was used for the original testing. Similarly, any evaporative/refueling families certified in later model years using carryover data must use the same method that was used for the original testing. We may do testing with or without speciation, but we will apply the 1.08 correction factor to unspeciated measurements for any of these four categories of evaporative emissions only if you also use it to determine your final test results.

(2) Diurnal and hot soak emissions may not exceed the Tier 3 emission standards, as follows:

(i) The emission standard for the sum of diurnal and hot soak measurements from the two-diurnal test sequence and the three-diurnal test sequence is based on a fleet average in a given model

year. You must specify a family emission limit (FEL) for each evaporative family. The FEL serves as the emission standard for the evaporative family with respect to all required diurnal and hot soak testing. Calculate your fleet-average emission level as described in § 86.1860 based on the FEL that applies for low-altitude testing to show that you meet the specified standard. For multi-fueled vehicles, calculate fleet-average emission levels based only on emission levels for testing with gasoline. You may generate emission credits for banking and trading and you may use banked or traded credits for demonstrating compliance with the diurnal plus hot soak emission standard for vehicles required to meet the Tier 3 standards, other than electric vehicles and gaseous-fueled vehicles, as described in § 86.1861 starting in model year 2017. You comply with the emission standard for a given model year if you have enough credits to show that your fleet-average emission level is at or below the applicable standard. You may exchange credits between or among evaporative families within an averaging set as described in § 86.1861. Separate diurnal plus hot soak emission standards apply for each evaporative/refueling emission family as shown for high-altitude conditions. The sum of diurnal and hot soak measurements may not exceed the following Tier 3 standards:

TABLE 1 OF § 86.1813–17—TIER 3 DIURNAL PLUS HOT SOAK EMISSION STANDARDS

[grams per test]

Vehicle category	Low-altitude conditions—fleet-average	High-altitude conditions
LDV, LDT1	0.300	0.65
LDT2	0.400	0.85
HLDT	0.500	[1] 1.15
HDV	0.600	1.75

[1] 1.25 g/test for MDPVs.

(ii) Specify FELs as follows:

(A) You may specify the low-altitude FEL in increments of 0.025 g above or below the otherwise applicable Tier 3 diurnal plus hot soak standard, up to the maximum values specified in the following table:

TABLE 2 OF § 86.1813–17—TIER 3 FEL CAPS FOR LOW-ALTITUDE TESTING

Vehicle category	FEL Caps
LDV	0.500
LLDT	0.650
HLDT	0.900
MDPV	1.000
HDV	1.4

(B) Calculate the FEL for testing at high-altitude conditions based on the difference between the low-altitude FEL and the standard. For example, if a light-duty vehicle was certified with an FEL of 0.400 g instead of the 0.300 g standard, the FEL for testing under high-altitude conditions would be 0.75 g (0.65 + 0.10).

(iii) Hydrocarbon emissions must not exceed 0.020 g for LDV and LDT and 0.030 g for HDV when tested using the Bleed Emission Test Procedure adopted by the California Air Resources Board as part of the LEV III program. This procedure quantifies diurnal emissions using the two-diurnal test sequence without measuring hot soak emissions. The standards in this paragraph (a)(2)(iii) do not apply for testing at high-altitude conditions. For vehicles with non-integrated refueling canisters, the bleed emission test and standard do not apply to the refueling canister. You may perform the Bleed Emission Test Procedure using the analogous test temperatures and the E10 test fuel specified in subpart B of this part.

(3) Running losses may not exceed 0.05 g per mile when measured using the test procedures specified in § 86.134. This standard does not apply for gaseous-fueled vehicles.

(4) Fuel systems for vehicles operating on one or more volatile liquid fuels may not exceed an effective leak diameter of 0.02 inches when measured using the procedure specified in 40 CFR 1066.985. For vehicles with fuel tanks exceeding 25 gallons nominal fuel tank capacity, you may request our approval for a leak standard greater than 0.020 inches, up to a maximum value of 0.040 inches.

(5) The Tier 3 evaporative emission standards start to phase in with model year 2017 for vehicles at or below 6,000 pounds GVWR and with model year 2018 for vehicles above 6,000 pounds GVWR.

Table 3 of this section specifies the minimum percentage of each manufacturer's sales in each model year that must be certified to the Tier 3 evaporative emission standards. Calculate annual percentages based on actual nationwide sales of all vehicles subject to standards under this paragraph (a) for the applicable model year; however, if all your FELs for Tier 3 evaporative families are at the applicable standard (neither generating nor using emission credits), the phase-in requirements are based on projected sales. Also, if you certify vehicles above 6,000 pounds GVWR to the Tier 3 evaporative emission standards in model year 2017, you may count projected U.S. sales of those vehicles toward your calculation for meeting the 40 percent requirement in 2017 (numerator only). Manufacturers may meet this requirement using the additional alternative phase-in provisions in paragraph (g) of this section. Vehicles from the identified model years not certified to the Tier 3 evaporative emission standards continue to be subject to the evaporative emission standards specified in § 86.1811–09(e) or § 86.1816–08(d), including the useful life provisions of § 86.1805–12. Note that this subjects LDV and LDT1 to a 150,000 mile useful life for evaporative emissions if the vehicles are subject to a 150,000 mile useful life for exhaust emissions. Keep records as needed to show that you meet the phase-in requirements specified in this section. See paragraph (g) of this section for additional provisions that apply for model year 2017 and the rest of the phase-in.

TABLE 3 OF § 86.1813–17—DEFAULT PHASE-IN SCHEDULE FOR TIER 3 EVAPORATIVE EMISSION STANDARDS

Model year	Minimum percentage of vehicles subject to the Tier 3 standards
2017	40 [1] [2]
2018	60
2019	60
2020	80
2021	80
2022	100

[1] The phase-in percentage for model year 2017 applies only for vehicles at or below 6,000 pounds GVWR.

[2] The leak standard specified in paragraph (a)(4) of this section does not apply for model year 2017.

(6) For model year 2017, exclude vehicle sales from California and section 177 states from the calculation to demonstrate compliance with the phase-in schedule in paragraph (a)(5) or (g) of this section, and from the credit calculation in § 86.1860.

(b) *Refueling emissions*. Light-duty vehicles, light-duty trucks, and complete heavy-duty vehicles must meet the refueling emission standards in this paragraph (b) when measured over the procedure specified in § 86.150. These standards apply starting with model year 2018 for vehicles above 10,000 pounds GVWR. The following refueling standards apply:

(1) 0.20 g THCE per gallon of fuel dispensed for vehicles using volatile liquid fuels. This standard also applies for diesel-fueled LDV.

(2) 0.15 g THC per gallon of fuel dispensed for liquefied petroleum gas-fueled vehicles and natural gas-fueled vehicles.

(c) *Fuel spitback*. For vehicles fueled by volatile liquid fuels, fuel spitback emissions may not exceed 1.0 g THCE when measured using the test procedures specified in § 86.146. The fuel spitback standard applies only to newly assembled vehicles.

(d) [Reserved]

(e) *Auxiliary engines and separate fuel systems*. The provisions of 40 CFR 1037.103(g) apply for vehicles with auxiliary engines. This includes any engines installed in the final vehicle configuration that contribute no motive power through the vehicle's transmission.

(f) *Refueling provisions for gaseous-fueled vehicles*. The following provisions apply specifically for gaseous-fueled vehicles:

(1) Compressed natural gas vehicles must meet the requirements for fueling connection devices as specified in ANSI NGV1–2006 or CSA IR–1–15 (incorporated by reference in § 86.1).

(2) [Reserved]

(3) With our advance approval, liquefied petroleum gas-fueled vehicles with gauges or valves that can be opened to release fuel or fuel vapor during refueling (such as fixed liquid level gauges) may be tested for refueling emissions without opening such gauges or valves, as outlined in § 86.157–98(d)(2). We will

approve your request if you can show that such gauges or valves will not be open during in-use refueling due to inaccessibility or other design features that would prevent them from opening or make this very unlikely.

(g) *Alternative phase-in options for Tier 3 evaporative emission standards.* You may use any of the following alternative methods to transition to the Tier 3 evaporative emission standards:

(1) Starting in model year 2015, you may earn an ''allowance'' for each vehicle that you certify early under this paragraph (g)(1). For each allowance you earn, you may count it as one compliant vehicle in a later model year during the phase-in period. Calculate the total phase-in percentage in each model year by adding the allowances to the number of compliant vehicles (in the numerator), without increasing total sales (in the denominator). For each allowance you earn, you may alternatively count it as one compliant vehicle under the phase-in schedule described in paragraph (g)(5) of this section, except that you may not use those allowances to increase the value of the phase-in index from any model year by more than 10 percentage points. Vehicles earning allowances under this paragraph (g)(1) may not have an FEL above the applicable Tier 3 standard, and may not generate emission credits for banking or trading. Allowances may not be traded to another company. You may earn allowances under this paragraph (g)(1) for early-compliant vehicles as follows:

(i) Model year 2015 and 2016 vehicles at or below 6,000 pounds GVWR meeting the Tier 3 standards in paragraph (a) of this section or the equivalent California standards as specified in paragraph (g)(4) of this section earn allowances, as long as the vehicles are not sold in California or any of the section 177 states.

(ii) Model year 2015 through 2017 LDV and LDT above 6,000 pounds GVWR meeting the Tier 3 standards in paragraph (a) of this section or the equivalent California standards as specified in paragraph (g)(4) of this section earn allowances, as long as the vehicles are not sold in California or any of the section 177 states.

(iii) Model year 2015 through 2017 MDPV and HDV meeting the Tier 3 standards in paragraph (a) of this section or the equivalent California standards as specified in paragraph (g)(4) of this section earn allowances for vehicles sold in any state.

(iv) To the extent that you over-comply with the 40-percent phase-in requirement in model year 2017, you may count your actual U.S. sales exceeding the required number of Tier 3 vehicles as allowances toward meeting the phase-in requirement in 2018 and later model years.

(v) For HDV above 10,000 pounds GVWR and at or below 14,000 pounds GVWR that you certify to the refueling emission standards in paragraph (b) of this section in model years 2015 through 2017 and sell outside of California and the section 177 states, a single vehicle may produce two allowances if it is certified to the Tier 3 diurnal plus hot soak standard. Allowances earned under this paragraph (g)(1)(v) may alternatively be used in model years 2018 through 2022 to phase in the refueling standard, except that a single early-compliant vehicle produces only a single allowance.

(vi) Complete HDV above 14,000 pounds GVWR and all sizes of incomplete HDV earn allowances as described in paragraph (g)(1)(v) of this section if they are certified to the refueling emission standards in paragraph (b) of this section in model years 2015 through 2021.

(2) The following alternative phase-in options apply for model year 2017:

(i) You may disregard the percentage phase-in specified in paragraph (a)(5) of this section for 2017 if you choose 50-state certification for all your vehicles meeting the LEV III PZEV evaporative standards in 2017. Under this option, you may not produce a higher-emitting version of those vehicle models for sale outside of California or the section 177 states. Such vehicles may be certified using carryover data under the California program, but they may not generate or use emission credits. LDV and LDT1 that comply under this paragraph (g)(2)(i) may not generate allowances under paragraph (g)(1) of this section, regardless of the calculated

percentage of compliant vehicles in model year 2017.

(ii) You may comply with the phase-in requirement for model year 2017 by meeting the Tier 3 emission standards for diurnal plus hot soak, running loss, and bleed emissions (or the equivalent set of California standards as allowed in this section) with 20 percent of vehicles at or below 6,000 pounds GVWR, and by meeting the leak standard in paragraph (a)(2)(iii) of this section with 20 percent of vehicles at or below 6,000 pounds GVWR. You may optionally include vehicles above 6,000 pounds GVWR under this paragraph (g)(2)(ii) to calculate the percentage (numerator only) if they meet the leak and/or evaporative emission standards in model year 2017. Vehicles complying with Tier 3 evaporative emission standards may generate or use emission credits relative to the diurnal plus hot soak standard as specified in this section, but they may not generate allowances. You may apply this option and use the alternative phase-in calculation in paragraph (g)(4) of this section, subject to the following conditions:

(A) You must meet or exceed the 20 percent threshold for both evaporative emissions and the leak standard.

(B) All the vehicles meeting the leak standard must also meet the Tier 3 evaporative emission standards and the OBD requirements in § 86.1806–17(b)(1).

(C) Determine the appropriate percentage for calculating compliance under paragraph (g)(4) of this section by adding 20 to the percentage of vehicles meeting the Tier 3 evaporative emission standards to account for vehicles meeting the leak standard. Do not increase the percentage based on meeting the leak standard with more than 20 percent of your vehicles in model year 2017.

(3) If you certify model year 2021 or earlier vehicles to the LEV III evaporative emission standards in California, you may certify those as Tier 3 vehicles that count toward meeting the phase-in requirements of this section. Such vehicles must still be certified to the high-altitude standards in paragraph (a)(2) of this section and the leak standard specified in paragraph (a)(4) of this section. You may not certify vehicles under this paragraph (g)(3) after model year 2021. Vehicles meeting the LEV III standards may also generate allowances under paragraph (g)(1) of this section; however, these vehicles may generate or use emission credits under this subpart only if they are not used to generate allowances and if they are certified using the Option 2 procedures under the LEV III program (including the bleed emission test). Vehicles may be certified under this paragraph (g)(3) based on the rig test (''Option 1'') if they are certified to LEV III standards based on the rig test before model year 2017; this certification option applies through model year 2021. Include these Option 1 vehicles in the calculation of fleet average emissions by using the appropriate Tier 3 emission standard as the FEL. Note that the rig test is considered a diurnal test with respect to the provisions to account for ethanol emissions as described in paragraph (a)(1)(iv) of this section.

(4) If you fall short of the phase-in percentage specifications in paragraph (a)(5) of this section, you may designate the requisite number of Tier 2 vehicles as Tier 3 vehicles for purposes of demonstrating compliance with the Tier 3 standards in this section. To do this, factor those Tier 2 vehicles into the Tier 3 fleet-average emission calculation using an FEL that is equal to the applicable diurnal plus hot soak standard from the two-day test sequence. The Tier 3 emission standards do not apply to these Tier 2 vehicles. In addition, you may disregard the phase-in percentages specified in paragraph (a)(5) of this section if you instead comply based on one of the following alternative measures:

(i) You may comply with an alternate phase-in schedule described in this paragraph (g)(4)(i). To do this, you must give us a detailed plan for describing how you will meet the alternate phase-in schedule. You comply with the alternate phase-in schedule by calculating an evaporative phase-in index using the following equation that is at or above 1,280 for model years 2017 through 2022 (or 1,040 for model years 2018 through 2022 if you use the provisions of paragraph (g)(2)(i) of this section):

$$\text{Evaporative phase-in index} = 6 \cdot APP_{2017} + 5 \cdot APP_{2018} + 4 \cdot APP_{2019} + 3 \cdot APP_{2020} + 2 \cdot APP_{2021} + APP_{2022}$$

Where:

APP = The phase-in percentage of vehicles meeting the Tier 3 evaporative emission standards for the indicated model year, based on actual sales, as described in paragraph (a)(5) of this section.

(ii) You may comply with an alternate phase-in schedule described in this paragraph (g)(4)(ii). To do this, you must give us a detailed plan for describing how you will meet the alternate phase-in schedule. You comply with the alternate phase-in schedule by calculating an evaporative phase-in index using the following equation that is at or above 420 for model years 2017 through 2022 (or 380 for model years 2018 through 2022 if you use the provisions of paragraph (g)(2)(i) of this section):

$$\text{Evaporative phase-in index} = APP_{2017} + APP_{2018} + APP_{2019} + APP_{2020} + APP_{2021} + APP_{2022}$$

Where:

APP = The phase-in percentage of vehicles meeting the Tier 3 evaporative emission standards for the indicated model year, based on actual sales, as described in paragraph (a)(5) of this section.

(5) This paragraph (g)(5) describes an alternative approach to phasing in the evaporative and refueling emission standards for gaseous-fueled vehicles above 8,500 pounds GVWR. Under this alternative phase-in, you may disregard the requirements of this section related to evaporative emission standards that apply for these vehicles before model year 2019. Similarly, you may disregard the refueling emission standards of this section before model year 2019 for vehicles above 10,000 pounds GVWR. For model year 2019, you may exclude from the phase-in calculation any evaporative families with vehicles that have a Job 1 date on or before March 3, 2018 (see 40 CFR 85.2304). Any vehicles not subject to Tier 3 evaporative emission standards during this phase-in period must continue to comply with the evaporative emission standards in § 86.1816–08(d); such vehicles are subject to the useful life provisions in § 86.1805–12 relative to evaporative emission standards. Each vehicle counting toward the phase-in percentage under this paragraph (g)(5) must meet all the standards that apply throughout the useful life as specified in § 86.1805–17.

(h) *Small-volume manufacturers.* Small-volume manufacturers meeting the eligibility requirements in § 86.1838 may delay complying with the requirements in this section until model year 2022. If meeting the Tier 3 standards would cause severe economic hardship, such manufacturers may ask us to approve an extended compliance deadline under the provisions of 40 CFR 1068.250, except that the solvency criterion does not apply and there is no maximum duration of the hardship relief.

[79 FR 23718, Apr. 28, 2014, as amended at 80 FR 9107, Feb. 19, 2015; 81 FR 73984, Oct. 25, 2016]

§ 86.1816–05 Emission standards for complete heavy-duty vehicles.

This section applies to 2005 and later model year complete heavy-duty vehicles (2003 model year for manufacturers choosing Otto-cycle HDE option 1 in § 86.005–1(c)(1), or 2004 model year for manufacturers choosing Otto-cycle HDE option 2 in § 86.005–1(c)(2)) fueled by gasoline, methanol, natural gas and liquefied petroleum gas fuels except as noted. This section does not apply to Medium-duty Passenger Vehicles, which are covered under § 86.1811. This section also applies to 2000 and later model year complete heavy duty vehicles participating in the early banking provisions of the averaging, trading and banking program as specified in § 86.1817–05(n). Multi-fueled vehicles shall comply with all requirements established for each consumed fuel. For methanol fueled vehicles, references in this section to hydrocarbons or total hydrocarbons shall mean total hydrocarbon equivalents and references to non-methane hydrocarbons shall mean non-methane hydrocarbon equivalents.

(a) *Exhaust emission standards.* (1) Exhaust emissions from 2005 and later model year complete heavy-duty vehicles at and above 8,500 pounds Gross Vehicle Weight Rating but equal to or less than 10,000 Gross Vehicle Weight Rating pounds shall not exceed the following standards at full useful life:

(i) [Reserved]

(ii) *Non-methane organic gas.* 0.280 grams per mile; this requirement may be satisfied by measurement of non-methane hydrocarbons or total hydrocarbons, at the manufacturer's option.

(iii) *Carbon monoxide.* 7.3 grams per mile.

(iv) *Oxides of nitrogen.* 0.9 grams per mile.

(v) [Reserved]

(2) Exhaust emissions from 2005 and later model year complete heavy-duty vehicles above 10,000 pounds Gross Vehicle Weight Rating but less than 14,000 pounds Gross Vehicle Weight Rating shall not exceed the following standards at full useful life:

(i) [Reserved]

(ii) *Non-methane organic gas.* 0.330 grams per mile; this requirement may be satisfied by measurement of non-methane hydrocarbons or total hydrocarbons, at the manufacturer's option.

(iii) *Carbon monoxide.* 8.1 grams per mile.

(iv) *Oxides of nitrogen.* 1.0 grams per mile.

(v) [Reserved]

(b)–(c) [Reserved]

(d) *Evaporative emissions.* Evaporative hydrocarbon emissions from gasoline-fueled, natural gas-fueled, liquefied petroleum gas-fueled, and methanol-fueled complete heavy-duty vehicles shall not exceed the following standards. The standards apply equally to certification and in-use vehicles. The spitback standard also applies to newly assembled vehicles.

(1) Gasoline, natural gas, liquefied petroleum gas, and methanol fuel. For the full three-diurnal test sequence, diurnal plus hot soak measurements: 3.0 grams per test.

(2) *Gasoline and methanol fuel only.* For the supplemental two-diurnal test sequence, diurnal plus hot soak measurements: 3.5 grams per test.

(3) *Gasoline and methanol fuel only.* Running loss test: 0.05 grams per mile.

(4) *Gasoline and methanol fuel only.* Fuel dispensing spitback test: 1.0 grams per test.

(e) *Refueling emissions*—(1) *Standards.* Refueling emissions from Otto-cycle complete heavy-duty vehicles equal to or less than 10,000 pounds Gross Vehicle Weight Rating shall be phased in, in accordance with the schedule in Table S01–5 in § 86.1810–01 not to exceed the following emission standards:

(i) For gasoline-fueled and methanol-fueled vehicles: 0.20 grams hydrocarbon per gallon (0.053 gram per liter) of fuel dispensed.

(ii) For liquefied petroleum gas-fueled vehicles: 0.15 grams hydrocarbon per gallon (0.04 gram per liter) of fuel dispensed.

(2) *Phase-in.* Complete heavy-duty vehicles subject to refueling standards must comply with the phase-in requirements found in Table S01–5 in § 86.1810–01, and must be grouped with HLDTs and MDPVs to determine phase-in compliance.

(3) *Alternate timing.* (i) For manufacturers choosing Otto-cycle HDE option 3 under § 86.005–1(c)(3), the refueling emissions standards are optional for 2004 model year complete heavy-duty vehicles.

(ii) For manufacturers choosing Otto-cycle HDE option 3 under § 86.005–1(c)(3), the manufacturer may exempt 2005 model year HDE test groups whose model year begins before July 31, 2004. Only 2005 model year HDE test groups whose model year begins on or after July 31, 2004 shall be considered (together with all 2005 model year HLDTs and MDPVs) for purposes of calculating the sales percentage for phase-in as outlined in § 86.1810–01(k).

(iii) For complete heavy-duty vehicles which have total fuel tank capacity of greater than 35 gallons, or which do not share a common fuel system with a light-duty truck or medium-duty passenger vehicle configuration, the refueling emissions standards are optional for the 2004 and 2005 model years.

(4) *Exceptions.* The provisions of this § 86.1816–05(e) do not apply to incomplete heavy-duty vehicles optionally certified to complete heavy duty vehicle standards under the provisions of § 86.1801–01(c)(2).

(f) [Reserved]

(g) *Idle exhaust emission standards, complete heavy-duty vehicles.* Exhaust emissions of carbon monoxide from 2005 and later model year gasoline, methanol, natural gas-and liquefied petroleum gas-fueled complete heavy-duty vehicles shall not exceed 0.50 percent of

exhaust gas flow at curb idle for a useful life of 11 years or 120,000 miles, whichever occurs first. This does not apply for vehicles certified to the requirements of § 86.1806–05

(h) *Alternate test groups.* Manufacturers may request to group complete heavy-duty vehicles into the same test group as vehicles subject to more stringent standards, so long as those complete heavy-duty vehicles meet the most stringent standards applicable to any vehicle within that test group, as provided at § 86.1827–(a)(5) and (d)(4).

[65 FR 59970, Oct. 6, 2000, as amended at 66 FR 5190, Jan. 18, 2001]

§ 86.1816–08 Emission standards for complete heavy-duty vehicles.

Section 86.1816–08 includes text that specifies requirements that differ from those specified in § 86.1816–05. Where a paragraph in § 86.1816–05 is identical and applicable to § 86.1816–08, this may be indicated by specifying the corresponding paragraph and the statement ''[Reserved]. For guidance see § 86.1816–05.''. This section applies to 2008 and later model year complete heavy-duty vehicles (excluding MDPVs) fueled by gasoline, methanol, natural gas and liquefied petroleum gas fuels except as noted. Multi-fueled vehicles shall comply with all requirements established for each consumed fuel. For methanol fueled vehicles, references in this section to hydrocarbons or total hydrocarbons shall mean total hydrocarbon equivalents and references to non-methane hydrocarbons shall mean non-methane hydrocarbon equivalents.

(a) *Exhaust emission standards.* (1) Exhaust emissions from 2008 and later model year complete heavy-duty vehicles at and above 8,500 pounds Gross Vehicle Weight Rating but equal to or less than 10,000 Gross Vehicle Weight Rating pounds shall not exceed the following standards at full useful life:

(i) [Reserved]

(ii) *Non-methane hydrocarbons.* (A) 0.195 grams per mile; this requirement may be satisfied by measurement of non-methane organic gas or total hydrocarbons, at the manufacturer's option. For alcohol-fueled vehicles, this standard is 0.195 grams per mile NMHCE.

(B) A manufacturer may elect to include any or all of its test groups in the NMHC emissions ABT programs for heavy-duty vehicles, within the restrictions described in § 86.1817–05. or § 86.1817–08. If the manufacturer elects to include test groups in any of these programs, the NMHC FEL may not exceed 0.28 grams per mile. This ceiling value applies whether credits for the family are derived from averaging, banking, or trading.

(iii) *Carbon monoxide.* 7.3 grams per mile.

(iv) *Oxides of nitrogen.* (A)0.2 grams per mile.

(B) A manufacturer may elect to include any or all of its test groups in the NO_X emissions ABT programs for heavy-duty vehicles, within the restrictions described in § 86.1817–05 or § 86.1817–08. If the manufacturer elects to include test groups in any of these programs, the NO_X FEL may not exceed 0.9 grams per mile. This ceiling value applies whether credits for the family are derived from averaging, banking, or trading.

(v) *Particulate.* 0.02 grams per mile.

(vi) *Formaldehyde.* 0.032 grams per mile.

(2) Exhaust emissions from 2008 and later model year complete heavy-duty vehicles above 10,000 pounds Gross Vehicle Weight Rating but less than 14,000 pounds Gross Vehicle Weight Rating shall not exceed the following standards at full useful life:

(i) [Reserved]

(ii) *Non-methane hydrocarbons.* (A) 0.230 grams per mile; this requirement may be satisfied by measurement of non-methane organic gas or total hydrocarbons, at the manufacturer's option. For alcohol-fueled vehicles, this standard is 0.230 grams per mile NMHCE.

(B) A manufacturer may elect to include any or all of its test groups in the NMHC emissions ABT programs for heavy-duty vehicles, within the restrictions described in § 86.1817–05. or § 86.1817–08. If the manufacturer elects to include test groups in any of these programs, the NMHC FEL may not exceed 0.33 grams per mile. This ceiling value applies whether credits for the family are derived from averaging, banking, or trading.

(iii) *Carbon monoxide*. 8.1 grams per mile.

(iv) *Oxides of nitrogen*. (A)0.4 grams per mile.

(B) A manufacturer may elect to include any or all of its test groups in the NO_X emissions ABT programs for heavy-duty vehicles, within the restrictions described in § 86.1817–05. or § 86.1817–08. If the manufacturer elects to include test groups in any of these programs, the NO_X FEL may not exceed 1.0 grams per mile. This ceiling value applies whether credits for the family are derived from averaging, banking, or trading.

(v) *Particulate*. 0.02 grams per mile.

(vi) *Formaldehyde*. 0.040 grams per mile.

(b)–(c) [Reserved]

(d) *Evaporative emissions*. Evaporative hydrocarbon emissions from gasoline-fueled, natural gas-fueled, liquefied petroleum gas-fueled, and methanol-fueled complete heavy-duty vehicles shall not exceed the following standards. The standards apply equally to certification and in-use vehicles. The spitback standard also applies to newly assembled vehicles.

(1) For the full three-diurnal test sequence, diurnal plus hot soak measurements: 1.4 grams per test.

(2) Gasoline and methanol fuel only. For the supplemental two-diurnal test sequence, diurnal plus hot soak measurements: 1.75 grams per test.

(3) Gasoline and methanol fuel only. Running loss test: 0.05 grams per mile.

(4) Gasoline and methanol fuel only. Fuel dispensing spitback test: 1.0 grams per test.

(e) through (h) [Reserved]. For guidance see § 86.1816–05.

(i) *Phase-in options*. (1)(i) For model year 2008, manufacturers may certify some of their test groups to the standards applicable to model year 2008 vehicles under § 86.1816–05, in lieu of the exhaust standards specified in this section. These vehicles must comply with all other requirements applicable to model year 2007 vehicles. The combined number of vehicles in the test groups certified to the 2008 standards may not exceed 50 percent of the manufacturer's U.S. heavy-duty vehicle sales of complete heavy-duty Otto-cycle motor vehicles for model year 2008, except as explicitly allowed by paragraph (i)(2) of this section.

(ii) For model year 2008, manufacturers may certify some of their test groups to the evaporative standards applicable to model year 2007 engines under § 86.1816–05, in lieu of the evaporative standards specified in this section. These vehicles must comply with all other requirements applicable to model year 2008 vehicles, except as allowed by paragraph (i)(1)(i) of this section. The combined number of vehicles in the test groups certified to the 2007 standards may not exceed 50 percent of the manufacturer's U.S. heavy-duty vehicle sales of complete heavy-duty Otto-cycle motor vehicles for model year 2008.

(2)(i) Manufacturers certifying vehicles to all of the applicable standards listed in paragraph (a) of this section prior to model year 2008 (without using credits) may reduce the number of vehicles that are required to meet the standards listed in paragraph (a) of this section in model year 2008 and/or 2009, taking into account the phase-in option provided in paragraph (i)(1) of this section. For every vehicle that is certified early, the manufacturer may reduce the number of vehicles that are required by paragraph (i)(1) of this section to meet the standards listed in paragraph (a) of this section by one vehicle. For example, if a manufacturer produces 100 heavy-duty Otto-cycle vehicles in 2007 that meet all of the applicable the standards listed in paragraph (a) of this section, and it produced 10,000 heavy-duty Otto-cycle vehicles in 2009, then only 9,900 of the vehicles would need to comply with the standards listed in paragraph (a) of this section.

(ii) Manufacturers certifying vehicles to all of the applicable evaporative standards listed in paragraph (d) of this section prior to model year 2008 may reduce the number of vehicles that are required to meet the standards listed in paragraph (d) of this section in model year 2008 and/or 2009, taking into account the phase-in option provided in paragraph (i)(1) of this section. For every vehicle that is certified early, the manufacturer may reduce the number of vehicles that are required by paragraph (i)(1) of this section to meet

the evaporative standards listed in paragraph (d) of this section by one vehicle.

(3) Manufacturers certifying vehicles to all of the applicable standards listed in paragraph (i)(3)(i) or (ii) of this section (without using credits) and the evaporative standards listed in paragraph (d) of this section prior to model year 2008 may reduce the number of vehicles that are required to meet the standards listed in paragraph (a) of this section in model year 2008 and/or 2009, taking into account the phase-in option provided in paragraph (i)(1)(i) of this section. For every such vehicle that is certified early with sufficiently low emissions, the manufacturer may reduce the number of vehicles that are required by paragraph (i)(1)(i) of this section to meet the standards listed in paragraph (a) of this section by two vehicles. The applicable standards are:

(i) For complete heavy-duty vehicles at and above 8,500 pounds Gross Vehicle Weight Rating but equal to or less than 10,000 Gross Vehicle Weight Rating: 0.100 g/mile NMHC, 0.10 g/mile NO_X, 3.2 g/mile CO, 0.008 g/mile formaldehyde, and 0.02 g/mile PM.

(ii) For complete heavy-duty vehicles at or above 10,000 pounds Gross Vehicle Weight Rating but equal to or less than 14,000 Gross Vehicle Weight Rating: 0.117 g/mile NMHC, 0.20 g/mile NO_X, 3.7 g/mile CO, 0.010 g/mile formaldehyde, and 0.02 g/mile PM.

(j) (1) For model years prior to 2012, for purposes of determining compliance after title or custody has transferred to the ultimate purchaser, for vehicles meeting the applicable emission standards of this section, the applicable compliance limits shall be determined by adding the applicable adjustment from paragraph (j)(2) of this section to the otherwise applicable standard or FEL.

(2) The in-use adjustments are:

(i) 0.1 g/mi for NO_X.

(ii) 0.100 g/mi NMHC.

(iii) 0.01 g/mi for PM.

[66 FR 5190, Jan. 18, 2001, as amended at 70 FR 40443, July 13, 2005]

§ 86.1816–18 Emission standards for heavy-duty vehicles.

(a) *Applicability and general provisions.* This section describes exhaust emission standards that apply for model year 2018 and later complete heavy-duty vehicles. These standards are optional for incomplete heavy-duty vehicles and for heavy duty vehicles above 14,000 pounds GVWR as described in § 86.1801. Greenhouse gas emission standards are specified in § 86.1818 for MDPV and in § 86.1819 for other HDV. See § 86.1813 for evaporative and refueling emission standards. This section may apply to vehicles before model year 2018 as specified in paragraph (b)(11) of this section. Separate requirements apply for MDPV as specified in § 86.1811. See subpart A of this part for requirements that apply for incomplete heavy-duty vehicles and for heavy-duty engines certified independent of the chassis. The following general provisions apply:

(1) Test all vehicles as described in this section using a chassis dynamometer; establish appropriate load settings based on adjusted loaded vehicle weight (see § 86.1803).

(2) Some provisions apply differently depending on the vehicle's power-to-weight ratio. Determine a vehicle's power-to-weight ratio by dividing the engine's rated power by the vehicle's GVWR (in hp/pound). For purposes of this section, if a test group includes multiple configurations, use the vehicle with the highest power-to-weight ratio to characterize the test group.

(3) Use E10 test fuel as required in § 86.113, except as specified in this section.

(4) Measure emissions from hybrid electric vehicles (including plug-in hybrid electric vehicles) as described in 40 CFR part 1066, subpart F, except that these procedures do not apply for plug-in hybrid electric vehicles during charge-depleting operation.

(b) *Tier 3 exhaust emission standards.* Exhaust emissions may not exceed the Tier 3 exhaust emission standards, as follows:

(1) Measure emissions using the procedures of subpart B of this part, using specific driving schedules and additional procedures as follows:

(i) The Federal Test Procedure (FTP) is based on testing with the Urban Dynamometer Driving Schedule (UDDS) specified in paragraph (a) of Appendix I of this part.

(ii) The Heavy-Duty Supplemental Federal Test Procedure (HD–SFTP) involves testing with the UDDS, the SC03 driving schedule specified in paragraph (h) of Appendix I of this part, and one of the following additional driving schedules:

(A) For Class 2b vehicles, the US06 driving schedule specified in paragraph (g) of Appendix I of this part.

(B) For Class 2b vehicles with a power-to-weight ratio at or below 0.024 hp/pound that are certified to optional standards under paragraphs (b)(2) and (4) of this section, the highway portion of the US06 driving schedule characterized as the ''second bag'' in § 86.159–08(a).

(C) For Class 3 vehicles, the Hot LA–92 driving schedule as specified in paragraph (c) of Appendix I of this part.

(iii) HD–SFTP emissions are calculated as a composite of test results over these driving schedules based on the following calculation:

$$\text{HD–SFTP (g/mi)} = 0.35 \cdot \text{FTP} + 0.28 \cdot \text{HDSIM} + 0.37 \cdot \text{SC03}$$

Where:

HDSIM = the appropriate driving schedule specified in paragraph (b)(1)(ii)(A) through (C) of this section.

(iv) You may alternatively use FTP emission results to substitute for the SC03 value in the calculation under paragraph (b)(1)(iii) of this section for a given vehicle for any testing under this section. Such vehicles remain subject to the SFTP standard when tested over the SC03 driving schedule.

(v) Hydrocarbon emission standards are expressed as NMOG; however, you may measure exhaust emissions based on nonmethane hydrocarbon instead of NMOG as described in 40 CFR 1066.635.

(2) Table 1 of this section describes fully phased-in Tier 3 standards that apply as specified in this paragraph (b) for the identified driving schedules. The FTP standards for NMOG + NO_X apply on a fleet-average basis using discrete bin standards as described in paragraph (b)(4) of this section. The bin standards include additional emission standards for CO emissions, and for NMOG + NO_X standards when testing over the HD–SFTP driving schedule. Table 1 follows:

TABLE 1 OF § 86.1816–18—FULLY PHASED-IN TIER 3 HDV EXHAUST EMISSION STANDARDS

[Tg/mile]

HDV class	Fleet-average NMOG + NO_X	PM		Formaldehyde
	FTP	FTP	HD–SFTP	FTP
2b	0.178	0.008	0.010 [1]	0.006
3	0.247	0.010	0.007	0.006

[1] For vehicles with a power-to-weight ratio at or below 0.024 hp/pound that are certified using the driving schedule described in paragraph (b)(1)(ii)(B) of this section, the HD–SFTP standard for PM is 0.007 g/mile instead of the value specified in the table.

(3) The FTP standards specified in this section apply equally for testing at low-altitude conditions and high-altitude conditions. The HD–SFTP standards described in this section apply only for testing at low-altitude conditions.

(4) The FTP emission standard for NMOG + NO_X is based on a fleet average in a given model year. You must specify a family emission limit (FEL) for each test group. The FEL serves as the emission standard for the test group with respect to all required FTP testing. Calculate your fleet-average emission level as described in § 86.1860 to show that you meet the specified standard. For multi-fueled vehicles, calculate fleet-average emission levels based only on emission levels for testing with gasoline or diesel fuel. You may generate or use emission credits for banking and trading and you may use banked or traded credits for demonstrating compliance with the FTP emission standard for NMOG + NO_X as described in § 86.1861. You comply with the emission standard for a given model year if you have enough credits to show that your fleet-average emission level is at or below the applicable standard. You may exchange credits between or among any test groups subject to standards under this section.

Specify one of the identified values from Table 2 or Table 3 of this section as the FEL for demonstrating that your fleet-average emission level complies with the FTP emission standard for NMOG + NO_X. These FEL values define emission bins that also determine corresponding emission standards for NMOG + NO_X emissions over the HD–SFTP driving schedule and for CO emissions, as follows:

TABLE 2 OF § 86.1816–18—TIER 3 BIN STANDARDS—CLASS 2b

[g/mile]

FEL Name	NMOG + NO_X		CO	
	FTP (FEL)	HD–SFTP [1]	FTP	HD–SFTP
Bin 250	0.250	0.800	6.4	22.0
Bin 200	0.200	0.800	4.2	22.0
Bin 170	0.170	0.450	4.2	12.0
Bin 150	0.150	0.450	3.2	12.0
Bin 0 [2]	0.000	0.000	0.0	0.0

[1] Vehicles with a power-to-weight ratio at or below 0.024 hp/pound that are certified using the driving schedule described in paragraph (b)(1)(ii)(B) of this section, the following HD–SFTP bin standards for NMOG + NO_X apply instead of those identified in the table: 0.350 g/mile for Bin 150 and Bin 170; and 0.550 g/mile for Bin 200 and Bin 250.

[2] Vehicles certified to Bin 0 must also meet PM and formaldehyde standards of 0.000 g/mile instead of the standards specified in paragraph (b)(2) of this section.

TABLE 3 OF § 86.1816–18—TIER 3 BIN STANDARDS—CLASS 3

[g/mile]

FEL Name	NMOG + NO_X		CO	
	FTP (FEL)	HD–SFTP	FTP	HD–SFTP
Bin 400	0.400	0.550	7.3	6.0
Bin 270	0.270	0.550	4.2	6.0
Bin 230	0.230	0.350	4.2	4.0
Bin 200	0.200	0.350	3.7	4.0
Bin 0 [1]	0.000	0.000	0.0	0.0

[1] Vehicles certified to Bin 0 must also meet PM and formaldehyde standards of 0.000 g/mile instead of the standards specified in paragraph (b)(2) of this section.

(5) [Reserved]

(6) The full Tier 3 program includes new emission standards for NMOG + NO_X, PM, CO, and formaldehyde; it also includes measurement with a new test fuel and a longer useful life. Vehicles meeting all these requirements are considered Final Tier 3 vehicles. Vehicles that do not meet all the Tier 3 requirements are considered Interim Tier 3 vehicles. The Tier 3 PM standards phase in over several years. Any vehicles not subject to Tier 3 PM standards during the phase-in period must continue to comply with the PM standards in § 86.1816–08. Paragraph (b)(7) of this section describes how to transition to Tier 3 standards for emissions other than PM. The following provisions describe the primary approach for phasing in the Tier 3 PM standards:

(i) You must meet the FTP emission standard for PM with 20, 40, 70, and 100 percent of your projected nationwide sales of all vehicles subject to this section in model years 2018 through 2021, respectively. Each vehicle meeting the Tier 3 FTP standard for PM must also meet the Tier 3 HD–SFTP standard for PM.

(ii) You may disregard the phase-in percentages specified in paragraph (b)(6)(i) of this section if you instead comply with an indexed PM phase-in schedule as described in this paragraph (b)(6)(ii). To do this, you must notify us of your intent before January 1, 2018, and include a detailed plan for complying with the indexed phase-in schedule. You comply with the indexed phase-in schedule by calculating a PM phase-in index at or above 440 using the following equation for model years 2018 through 2021:

$$\text{PM phase-in index} = 4 \cdot APP_{2018} + 3 \cdot APP_{2019} + 2 \cdot APP_{2020} + APP_{2021}$$

Where:

APP = The phase-in percentage of vehicles meeting the Tier 3 PM standards for the

indicated model year, based on actual sales.

(iii) Vehicles meeting the Tier 3 PM standards must meet those standards over the useful life as specified in § 86.1805. Note that Interim Tier 3 vehicles may have different useful life values for PM emission standards than for other emission standards.

(iv) Measure PM emissions from all vehicles using the same test fuel used for measuring NMOG + NO_X emissions.

(v) You may certify Interim Tier 3 vehicles based on carryover data.

(vi) You may use the alternative phase-in provisions described in paragraph (b)(8) of this section to transition to the Tier 3 exhaust emission standards on a different schedule.

(7) The following provisions describe the primary approach for phasing in the Tier 3 standards other than PM in 2022 and earlier model years:

(i) The fleet-average FTP emission standard for NMOG + NO_X phases in over several years as described in this paragraph (b)(7)(i). You must identify FELs as described in paragraph (b)(4) of this section and calculate a fleet-average emission level to show that you meet the FTP emission standard for NMOG+NO_X that applies for each model year. You may certify using transitional bin standards specified in Table 5 of this section through model year 2021; these vehicles are subject to the FTP emission standard for formaldehyde as described in § 86.1816–08. You may use the E0 test fuel specified in § 86.113 for gasoline-fueled vehicles certified to the transitional bins; the useful life period for these vehicles is 120,000 miles or 11 years. Fleet-average FTP emission standards decrease as shown in the following table:

TABLE 4 OF § 86.1816–18—DECLINING FLEET-AVERAGE FTP EMISSION STANDARDS FOR NMOG + NO_X

[g/mile]

Model Year	Class 2b	Class 3
2016 [1]	0.333	0.548
2017 [1]	0.310	0.508
2018	0.278	0.451
2019	0.253	0.400
2020	0.228	0.349
2021	0.203	0.298
2022	0.178	0.247

[1] Fleet-average standards are shown for 2016 and 2017 for purposes of voluntary early compliance as described in paragraph (b)(11) of this section.

TABLE 5 OF § 86.1816–18—TRANSITIONAL TIER 3 FTP BIN STANDARDS

[g/mile] [1]

Class	FEL Name	NMOG + NO_X	NO_X [2]	CO
2b	Bin 395	0.395	0.2	6.4
	Bin 340	0.340	0.2	6.4
3	Bin 630	0.630	0.4	7.3
	Bin 570	0.570	0.4	7.3

[1] Vehicles certified to Transitional Tier 3 FTP bins are not subject to HD-SFTP standards.
[2] The NO_X standard applies only for certification testing with emission-data vehicles.

(ii) You may use the alternative phase-in provisions described in paragraph (b)(8) of this section to transition to the Tier 3 exhaust emission standards on a different schedule.

(8) This paragraph (b)(8) describes an alternative approach to phasing in the Tier 3 emission standards. If you choose this approach, you must phase in the Tier 3 standards for all your vehicles subject to this section according to this schedule. Under this alternative phase in, you must meet all the standards specified in paragraph (b)(2) of this section according to the phase-in schedule specified in Table 6 of this section based on the indicated percentage of your projected nationwide sales in each model year. These vehicles must meet the applicable FTP emission standard for CO and the HD–SFTP emission standards for NMOG + NO_X and CO that apply for Class 2b Bin 170 and Class 3 Bin 230 as described in paragraph (b)(4) of this section. Any vehicles not subject to Tier 3 standards

during the phase-in period must continue to comply with the gaseous exhaust emission standards in § 86.1816–08. Each vehicle counting toward the PM phase-in percentage under this paragraph (b)(8) in model years 2019 and 2020 must also be included in the portion of the fleet meeting the Tier 3 standards for pollutants other than PM. Each vehicle counting toward the phase-in percentage for any pollutant must use the Tier 3 test fuel specified in § 86.113–15. The following exceptions and special provisions apply under this paragraph (b)(8):

(i) For model year 2019, you may exclude from the phase-in calculation any test groups that have a Job 1 date on or before March 3, 2018 (see 40 CFR 85.2304).

(ii) You may generate Tier 3 emission credits during the phase-in period if all your pre-Tier 3 vehicles in a given model year have FELs at or below the NO_X and NMHC standards in § 86.1816–08. Determine emission credits by calculating fleet-average emission levels for Tier 3 and pre-Tier 3 vehicles together; for pre-Tier 3 vehicles use an NMOG + NO_X equivalent FEL of 0.395 g/mile for Class 2b vehicles and 0.630 g/mile for Class 3 vehicles.

TABLE 6 OF § 86.1816–18—ALTERNATIVE PHASE-IN SCHEDULE

Model Year	Class 2b		Class 3	
	PM (percent)	Other than PM (percent)	PM (percent)	Other than PM (percent)
2019	40	65	40	60
2020	70	77	70	73
2021	100	88	100	87
2022	100	100	100	100

(9) Except as specified in paragraph (b)(8) of this section, you may not use credits generated from vehicles certified under § 86.1816–08 for demonstrating compliance with the Tier 3 standards.

(10) [Reserved]

(11) You may voluntarily certify your vehicles under this section in model years 2016 and 2017. If you do this, the fleet-average FTP emission standards for NMOG + NO_X apply to all your heavy-duty vehicles under this section as specified in paragraph (b)(7)(i) of this section. Use any of the available bin standards as described in this section. Vehicles certified under this paragraph (b)(11) must comply with the PM standards specified in § 86.1816–08 instead of the Tier 3 PM standards specified in this section.

(12) Alternate standards apply for in-use testing with 2022 and earlier model year vehicles as described in this paragraph (b)(12). These alternate standards apply in the first model year that a test group is certified to Tier 3 FTP or HD-SFTP standards for NMOG + NO_X or PM under this section. The alternate in-use standards also apply in the following model year (but not beyond 2022) for carryover test groups certified to the same bin standards. If you certify a test group to more stringent bin standards under this section in a given model year, the alternate in-use standards apply as if that were the first model year of certifying to the Tier 3 standards. The provisions of this section apply separately for NMOG + NO_X and PM. This paragraph (b)(12) does not apply for Bin 0 vehicles.

(i) The alternate in-use FTP standards for PM are 0.016 g/mile for Class 2b vehicles and 0.020 g/mile for Class 3 vehicles.

(ii) The alternate in-use HD-SFTP standards for PM are 0.012 g/mile for Class 2b vehicles with a power-to-weight ratio at or below 0.024 hp/pound that are certified to optional standards under paragraphs (b)(2) and (4) of this section, and 0.015 g/mile for other Class 2b vehicles. The alternate in-use HD-SFTP standard for PM is 0.012 g/mile for Class 3 vehicles. Alternate in-use HD-SFTP standards do not apply for vehicles certified to the transitional bins described in paragraph (b)(7) of this section.

(iii) Alternate in-use FTP and HD–SFTP standards for NMOG + NO_X apply as specified in the following table:

TABLE 7 OF § 86.1816–18—ALTERNATE IN-USE NMOG + NO_X STANDARDS

[g/mile]

Class	FEL name	FTP	HD–SFTP [1]
2b	Bin 250	0.370	1.120
Bin 200	0.300	1.120	
Bin 170	0.250	0.630	
Bin 150	0.220	0.630	
3	Bin 400	0.600	0.770
Bin 270	0.400	0.770	
Bin 230	0.340	0.490	
Bin 200	0.300	0.490	

[1] For Class 2b vehicles with a power-to-weight ratio at or below 0.024 hp/pound that are certified to optional standards under paragraphs (b)(2) and (4) of this section, the following alternate in-use HD–SFTP standards for NMOG + NO_X apply instead of those identified in the table: 0.490 g/mile for Bin 150 and Bin 170; and 0.770 g/mile for Bin 200 and Bin 250. Note that vehicles certified to transitional Tier 3 FTP bins are not subject to HD–SFTP standards.

(13) Keep records as needed to show that you meet the requirements specified in this paragraph (b) for phasing in standards and for complying with declining fleet-average average standards.

(c) *Highway NMOG + NO_X exhaust emission standard.* For vehicles certified to any of the Tier 3 standards specified in paragraph (b) of this section, NMOG + NO_X emissions measured on the highway test cycle in 40 CFR 1066.840 may not exceed the applicable NMOG + NO_X bin standard for FTP testing. Demonstrate compliance with this standard for low-mileage vehicles by applying the appropriate deterioration factor.

(d) *Provisions for Otto-cycle engines.* The special provisions described in § 86.1811–17(d) apply to vehicles with Otto-cycle engines that are certified under this section.

(e) *Small-volume manufacturers.* Small-volume manufacturers meeting the eligibility requirements in § 86.1838 may delay complying with the requirements in this section until model year 2022. This also applies for continuing to use the E0 test fuel specified in § 86.113 through model year 2021. If meeting the Tier 3 standards would cause severe economic hardship, such manufacturers may ask us to approve an extended compliance deadline under the provisions of 40 CFR 1068.250, except that the solvency criterion does not apply and there is no maximum duration of the hardship relief.

[79 FR 23721, Apr. 28, 2014, as amended at 80 FR 9108, Feb. 19, 2015; 81 FR 73984, Oct. 25, 2016]

§ 86.1817–05 Complete heavy-duty vehicle averaging, trading, and banking program.

(a) *General.* (1) Complete heavy-duty vehicles eligible for the NO_X averaging, trading and banking program are described in the applicable emission standards section of this subpart. All heavy-duty vehicles which include an engine labeled for use in clean-fuel vehicles as specified in 40 CFR part 88 are not eligible for this program. Participation in this averaging, trading, and banking program is voluntary.

(2)(i) Test groups with a family emission limit (FEL) as defined in § 86.1803–01 exceeding the applicable standard shall obtain emission credits as defined in § 86.1803–01 in a mass amount sufficient to address the shortfall. Credits may be obtained from averaging, trading, or banking, as defined in § 86.1803–01 within the averaging set restrictions described in paragraph (d) of this section.

(ii) Test groups with an FEL below the applicable standard will have emission credits available to average, trade, bank or a combination thereof. Credits may not be used for averaging or trading to offset emissions that exceed an FEL. Credits may not be used to remedy an in-use nonconformity determined by a Selective Enforcement Audit or by recall testing. However, credits may be used to allow subsequent production of vehicles for the test group in question if the manufacturer elects to recertify to a higher FEL.

(b) *Participation.* Participation in the NO_X averaging, trading, and banking program shall be done as follows:

(1) During certification, the manufacturer shall:

(i) Declare its intent to include specific test groups in the averaging, trading and banking program.

(ii) Declare an FEL for each test group participating in the program.

(A) The FEL must be to the same level of significant digits as the emission standard (one-hundredth of a gram per mile for NO_X emissions).

(B) In no case may the FEL exceed the upper limit prescribed in the section concerning the applicable complete heavy-duty vehicle chassis-based NO_X emission standard.

(iii) Calculate the projected NO_X emission credits (positive or negative) as defined in § 86.1803–01 based on quarterly production projections for each participating test group, using the applicable equation in paragraph (c) of this section and the applicable factors for the specific test group.

(iv)(A) Determine and state the source of the needed credits according to quarterly projected production for test groups requiring credits for certification.

(B) State where the quarterly projected credits will be applied for test groups generating credits.

(C) Emission credits as defined in § 86.1803–01 may be obtained from or applied to only test groups within the same averaging set as defined in § 86.1803–01. Emission credits available for averaging, trading, or banking, may be applied exclusively to a given test group, or designated as reserved credits as defined in § 86.1803–01.

(2) Based on this information, each manufacturer's certification application must demonstrate:

(i) That at the end of model year production, each test group has a net emissions credit balance of zero or more using the methodology in paragraph (c) of this section with any credits obtained from averaging, trading or banking.

(ii) The source of the credits to be used to comply with the emission standard if the FEL exceeds the standard, or where credits will be applied if the FEL is less than the emission standard. In cases where credits are being obtained, each test group involved must state specifically the source (manufacturer/test group) of the credits being used. In cases where credits are being generated/supplied, each test group involved must state specifically the designated use (manufacturer/test group or reserved) of the credits involved. All such reports shall include all credits involved in averaging, trading or banking.

(3) During the model year, manufacturers must:

(i) Monitor projected versus actual production to be certain that compliance with the emission standards is achieved at the end of the model year.

(ii) Provide the end-of-year reports required under paragraph (i) of this section.

(iii) For manufacturers participating in emission credit trading, maintain the quarterly records required under paragraph (l) of this section.

(4) Projected credits based on information supplied in the certification application may be used to obtain a certificate of conformity. However, any such credits may be revoked based on review of end-of-model year reports, follow-up audits, and any other compliance measures deemed appropriate by the Administrator.

(5) Compliance under averaging, banking, and trading will be determined at the end of the model year. Test groups without an adequate amount of NO_X emission credits will violate the conditions of the certificate of conformity. The certificates of conformity may be voided ab initio for test groups exceeding the emission standard.

(6) If EPA or the manufacturer determines that a reporting error occurred on an end-of-year report previously submitted to EPA under this section, the manufacturer's credits and credit calculations will be recalculated. Erroneous positive credits will be void. Erroneous negative balances may be adjusted by EPA for retroactive use.

(i) If EPA review of a manufacturer's end-of-year report indicates a credit shortfall, the manufacturer will be permitted to purchase the necessary credits to bring the credit balance for that test group to zero, at the ratio of 1.2 credits purchased for every credit needed to bring the balance to zero. If sufficient credits are not available to bring the credit balance for the test group in question to zero, EPA may void the certificate for that test group ab initio.

(ii) If within 180 days of receipt of the manufacturer's end-of-year report,

EPA review determines a reporting error in the manufacturer's favor (i.e. resulting in a positive credit balance) or if the manufacturer discovers such an error within 180 days of EPA receipt of the end-of-year report, the credits will be restored for use by the manufacturer.

(c) *Calculations.* For each participating test group, NO_X emission credits (positive or negative) are to be calculated according to one of the following equations and rounded to the nearest one-tenth of a Megagram (Mg). Consistent units are to be used throughout the equation.

(1) For determining credit need for all test groups and credit availability for test groups generating credits for averaging only:

$$\text{Emission credits} = (\text{Std-FEL}) \times (\text{UL}) \times (\text{Production}) \times (10^{-6})$$

(2) For determining credit availability for test groups generating credits for trading or banking:

$$\text{Emission credits} = (\text{Std-FEL}) \times (\text{UL}) \times (\text{Production}) \times (10^{-6})\ (\text{Discount})$$

(3) For purposes of the equations in paragraphs (c)(1) and (c)(2) of this section:

Std = the current and applicable complete heavy-duty vehicle NO_X emission standard in grams per mile or grams per kilometer.

Std = 0.9 grams per mile for heavy-duty vehicles at and above 8,500 pounds Gross Vehicle Weight Rating but equal to or less than 10,000 Gross Vehicle Weight Rating pounds and 1.0 grams per mile for heavy-duty vehicles above 10,000 pounds Gross Vehicle Weight Rating but less than 14,000 pounds Gross Vehicle Weight Rating for cases where certification to chassis-based standards is optional for purposes of early credit banking.

FEL = the NO_X family emission limit for the test group in grams per mile or grams per kilometer.

UL = the useful life, or alternative life as described in paragraph (c) of § 86.1805–01, for the given test group in miles or kilometers.

Production = the number of vehicles produced for U.S. sales within the given test group during the model year. Quarterly production projections are used for initial certification. Actual production is used for end-of-year compliance determination.

Discount = a one-time discount applied to all credits to be banked or traded within the model year generated. Except as otherwise allowed in paragraph (m) of this section, the discount applied here is 0.9. Banked credits traded in a subsequent model year will not be subject to an additional discount. Banked credits used in a subsequent model year's averaging program will not have the discount restored.

(d) *Averaging sets.* The averaging and trading of NO_X emission credits will be allowed between all test groups of heavy-duty vehicles subject to chassis-based standards excluding those vehicles produced for sale in California. Averaging, banking, and trading are not applicable to vehicles sold in California.

(e) *Banking of NO_X* emission credits—(1) *Credit deposits.* (i) NO_X emission credits may be banked from test groups produced in 2000 and later model years. Early banking is described in paragraph (n) of this section.

(ii) Manufacturers may bank credits only after the end of the model year and after actual credits have been reported to EPA in the end-of-year report. During the model year and before submittal of the end-of-year report, credits originally designated in the certification process for banking will be considered reserved and may be redesignated for trading or averaging.

(2) *Credit withdrawals.* (i) NO_X credits do not expire, except as provided in paragraph (o)(2) of this section.

(ii) Manufacturers withdrawing banked emission credits shall indicate so during certification and in their credit reports, as described in paragraph (i) of this section.

(3) *Use of banked emission credits.* The use of banked credits shall be within the averaging set and geographic restrictions described in paragraph (d) of this section, and only for the following purposes:

(i) Banked credits may be used in averaging, or in trading, or in any combination thereof, during the certification period. Credits declared for banking from the previous model year but not reported to EPA may also be used. However, if EPA finds that the reported credits cannot be proven, they will be revoked and unavailable for use.

(ii) Banked credits may not be used for averaging and trading to offset emissions that exceed an FEL. Banked credits may not be used to remedy an in-use nonconformity determined by a Selective Enforcement Audit or by recall testing. However, banked credits may be used for subsequent production of the test group if the manufacturer elects to recertify to a higher FEL.

(f) *Negative credit balance.* In the event of a negative credit balance in a trading situation, both the buyer and the seller would be liable.

(g) *Fuel.* Certification fuel used for credit generation must be of a type that is both available in use and expected to be used by the vehicle purchaser. Therefore, upon request by the Administrator, the vehicle manufacturer must provide information acceptable to the Administrator that the designated fuel is readily available commercially and would be used in customer service.

(h) *Credit apportionment.* At the manufacturers option, credits generated from complete heavy-duty vehicles under the provisions described in this section may be sold to or otherwise provided to another party for use in programs other than the averaging, trading and banking program described in this section.

(1) The manufacturer shall pre-identify two emission levels per test group for the purposes of credit apportionment. One emission level shall be the FEL and the other shall be the level of the standard that the test group is required to certify under § 86.1816–04. For each test group, the manufacturer may report vehicle sales in two categories, ''ABT-only credits'' and ''nonmanufacturer-owned credits''.

(i) For vehicle sales reported as ''ABT-only credits'', the credits generated must be used solely in the averaging, trading and banking program described in this section.

(ii) The vehicle manufacturer may declare a portion of vehicle sales ''nonmanufacturer-owned credits'' and this portion of the credits generated between the standard and the FEL, based on the calculation in paragraph (c)(1) of this section, would belong to the vehicle purchaser. The manufacturer may not generate any credits for the vehicle sales reported as ''nonmanufacturer-owned credits'' for this averaging, trading and banking program. Vehicles reported as ''nonmanufacturer-owned credits'' shall comply with the FEL and the requirements of this averaging, trading and banking program in all other respects.

(2) Only manufacturer-owned credits reported as ''ABT-only credits'' shall be used in the averaging, trading, and banking provisions described in this section.

(3) Credits shall not be double-counted. Credits used in this averaging, trading and banking program may not be provided to a vehicle purchaser for use in another program.

(4) Manufacturers shall determine and state the number of vehicles sold as ''ABT-only credits'' and ''nonmanufacturer-owned credits'' in the end-of-model year reports required under paragraph (i) of this section.

(i) *Application for certification and end-of-year reports.* Manufacturers participating in the emissions averaging, trading and banking program, shall submit for each participating test group the items listed in paragraphs (i)(1) through (3) of this section.

(1) *Application for certification.* (i) The application for certification will include a statement that the vehicles for which certification is requested will not, to the best of the manufacturer's belief, when included in the averaging, trading and banking program, cause the applicable NO_X emissions standard to be exceeded.

(ii) The application for certification will also include identification of the section of this subpart under which the test group is participating in the averaging, trading and banking program (e.g., § 86.1817–05), the type (NO_X), and the projected number of credits generated/needed for this test group, the applicable averaging set, the projected U.S. production volumes (excluding vehicles produced for sale in California), by quarter, and the values required to calculate credits as given in the applicable averaging, trading and banking section. Manufacturers shall also submit how and where credit surpluses are to be dispersed and how and through what means credit deficits are to be met, as explained in the applicable

averaging, trading and banking section. The application must project that each test group will be in compliance with the applicable emission standards based on the vehicle mass emissions and credits from averaging, trading and banking.

(2) [Reserved]

(3) *End-of-year report.* The manufacturer shall submit end-of-year reports for each test group participating in the averaging, trading and banking program, as described in paragraphs (i)(3)(i) through (iv) of this section.

(i) These reports shall be submitted within 90 days of the end of the model year to: Director, Certification and Compliance Division, U.S. Environmental Protection Agency, Mail Code 6405J, 1200 Pennsylvania Ave., NW., 20460.

(ii) These reports shall indicate the test group, the averaging set, the actual U.S. production volume (excluding vehicles produced for sale in California), the values required to calculate credits as given in the applicable averaging, trading and banking section, and the resulting type and number of credits generated/required. Manufacturers shall also submit how and where credit surpluses were dispersed (or are to be banked) and how and through what means credit deficits were met. Copies of contracts related to credit trading must also be included or supplied by the broker if applicable. The report shall also include a calculation of credit balances to show that net mass emissions balances are within those allowed by the emission standards (equal to or greater than a zero credit balance). Any credit discount factor described in the applicable averaging, trading and banking section must be included as required.

(iii) The production counts for end-of-year reports shall be based on the location of the first point of retail sale (e.g., customer, dealer, secondary manufacturer) by the manufacturer.

(iv) Errors discovered by EPA or the manufacturer in the end-of-year report, including changes in the production counts, may be corrected up to 180 days subsequent to submission of the end-of-year report. Errors discovered by EPA after 180 days shall be corrected if credits are reduced. Errors in the manufacturer's favor will not be corrected if discovered after the 180 day correction period allowed.

(j) *Failure to submit quarterly or end-of-year reports.* Failure by a manufacturer participating in the averaging, trading and banking program to submit any quarterly or end-of-year report (as applicable) in the specified time for all vehicles that are part of an averaging set is a violation of section 203(a)(1) of the Clean Air Act (42 U.S.C. 7522(a)(1)) for such vehicles.

(k) *Failure to submit end-of-year reports for banked credits.* Failure by a manufacturer generating credits for deposit only in the complete heavy-duty vehicle banking program to submit their end-of-year reports in the applicable specified time period (i.e., 90 days after the end of the model year) shall result in the credits not being available for use until such reports are received and reviewed by EPA. Use of projected credits pending EPA review will not be permitted in these circumstances.

(l) *Quarterly records.* Any manufacturer producing a test group participating in trading using reserved credits, shall maintain the following records on a quarterly basis for each test group in the trading subclass:

(1) The test group;

(2) The averaging set;

(3) The actual quarterly and cumulative U.S. production volumes excluding vehicles produced for sale in California;

(4) The values required to calculate credits as given in paragraph (c) of this section;

(5) The resulting type and number of credits generated/required;

(6) How and where credit surpluses are dispersed; and

(7) How and through what means credit deficits are met.

(m) *Additional flexibility for complete heavy-duty vehicles.* If a complete heavy-duty vehicle has a NO_X FEL of 0.6 grams per mile or lower, a discount of 1.0 may be used in the trading and banking credits calculation for NO_X described in paragraph (c)(2) of this section.

(n) *Early banking for complete heavy-duty vehicles.* Provisions set forth in

paragraphs (a) through (m) of this section apply except as specifically stated otherwise in this paragraph (n).

(1) *Early banking eligibility*. To be eligible for the early banking program described in this paragraph, the following must apply:

(i) Credits are generated from complete heavy-duty vehicles.

(ii) During certification, the manufacturer shall declare its intent to include specific test groups in the early banking program described in this paragraph (n).

(2) *Credit generation and use*. (i) Early credits may be generated by test groups starting in model year 2000.

(ii) Credits may only be used for complete heavy-duty vehicles subject to chassis-based standards, except as provided by paragraph (o) in this section, and all credits shall be subject to discounting and all other provisions contained in paragraphs (a) through (m) of this section.

(o) *Credit transfers*. A manufacturer that elects to comply with Option 1 or 2 contained in § 86.005–10(f) may transfer credits between its complete vehicle averaging set and its heavy-duty Otto-cycle engine averaging set as follows:

(1) Credits earned in model years 2004 (2003 for Option 1) through 2007 are eligible to be transferred.

(2) Transferred credits may not be banked for use in model years 2008 and later. Credits that are transferred but not used prior to model year 2008 must be forfeited.

(3) Prior to transferring credits, a manufacturer must develop a methodology to transfer the credits including a conversion factor that may be used to convert between chassis-based credits (derived on a grams per mile basis) and equivalent engine-based credits (derived on a grams per brake horsepower-hour basis). The methodology must be approved by EPA prior to the start of the model year in which the credits are to be transferred. The conversion factor must provide reasonable certainty that the credits are equivalent for the specific vehicle test group(s) and engine family(s) involved in the generation and use of the credits.

[65 FR 59971, Oct. 6, 2000, as amended at 71 FR 2830, Jan. 17, 2006; 81 FR 73985, Oct. 25, 2016]

§ 86.1817–08 Complete heavy-duty vehicle averaging, trading, and banking program.

Section 86.1817–08 includes text that specifies requirements that differ from § 86.1817–05. Where a paragraph in § 86.1817–05 is identical and applicable to § 86.1817–08, this may be indicated by specifying the corresponding paragraph and the statement ''[Reserved]. For guidance see § 86.1817–05.'' This section does not apply for NO_X or NMOG + NO_X emissions for vehicles certified to the Tier 3 standards in § 86.1816–18, including those vehicles that certify to the Tier 3 standards before model year 2018. See §§ 86.1860 and 86.1861 for provisions that apply for vehicles certified to the Tier3 standards.

(a) through (o) [Reserved]. For guidance see § 86.1817–05.

(p) The following provisions apply for model year 2008 and later engines. These provisions apply instead of the provisions of paragraphs § 86.1817–05 (a) through (o) to the extent that they are in conflict.

(1) Manufacturers of Otto-cycle vehicles may participate in an NMHC averaging, banking and trading program to show compliance with the standards specified in § 86.1806–08. The generation and use of NMHC credits are subject to the same provisions in paragraphs § 86.1817–05 (a) through (o) that apply for NO_X credits, except as otherwise specified in this section.

(2) NO_X or NMHC (or NO_X plus NMHC) credits may be exchanged between heavy-duty Otto-cycle test groups certified to the engine standards of subpart A of this part and heavy-duty Otto-cycle test groups certified to the chassis standards of this subpart, subject to an 0.8 discount factor (e.g., 100 grams of NO_X credits generated from vehicles would be equivalent to 80 grams of NO_X credits if they are used in the engine program of subpart A of this part, and vice versa). Credits that were previously discounted when they were banked according to § 86.1817–05(c), are subject to an additional discount factor

of 0.888 instead of the 0.8 discount factor otherwise required by this paragraph (p)(2). This results in a total discount of 0.8 ($0.9 \times 0.888 = 0.8$).

(3) Credits are to be rounded to the nearest one-hundredth of a Megagram.

(4) To calculate credits relative to the NO_X standards listed in § 86.1816–08 (a)(1)(iv)(A) or (a)(2)(iv)(A) (0.2 or 0.4 grams per mile, respectively) express the standard and FEL to the nearest one-hundredth of a gram per mile prior to calculating the credits. Thus, either 0.20 or 0.40 should be used as the value for ''Std''.

(5) Credits generated for 2008 and later model year test groups are not discounted (except as specified in § 86.1817–05(c) and paragraph (p)(2) of this section), and do not expire.

(6) For the purpose of using or generating credits during a phase-in of new standards, a manufacturer may elect to split a test group into two subgroups: one which uses credits and one which generates credits. The manufacturer must indicate in the application for certification that the test group is to be split, and may assign the numbers and configurations of vehicles within the respective subfamilies at any time prior to the submission of the end-of-year report described in § 86.1817–05 (i)(3). Manufacturers certifying a split test group may label all of the vehicles within that test group with the same FELs: either with a NO_X FEL and an NMHC FEL, or with a single NO_X + NMHC FEL. The FEL(s) on the label will apply for all SEA or other compliance testing.

(7) Vehicles meeting all of the applicable standards of § 86.1816–08 prior to model year 2008 may generate NMHC credits for use by 2008 or later test groups. Credits are calculated according to § 86.1817–05(c), except that the applicable FEL cap listed in § 86.1816–08(a)(1)(ii)(B) or (2)(ii)(B) applies instead of ''Std'' (the applicable standard).

[66 FR 5192, Jan. 18, 2001, as amended at 79 FR 23725, Apr. 28, 2014]

§ 86.1818–12 Greenhouse gas emission standards for light-duty vehicles, light-duty trucks, and medium-duty passenger vehicles.

(a) *Applicability*. (1) This section contains standards and other regulations applicable to the emission of the air pollutant defined as the aggregate group of six greenhouse gases: Carbon dioxide, nitrous oxide, methane, hydrofluorocarbons, perfluorocarbons, and sulfur hexafluoride. This section applies to 2012 and later model year LDV, LDT and MDPV, including multi-fuel vehicles, vehicles fueled with alternative fuels, hybrid electric vehicles, plug-in hybrid electric vehicles, electric vehicles, and fuel cell vehicles. Unless otherwise specified, multi-fuel vehicles must comply with all requirements established for each consumed fuel. The provisions of this section, except paragraph (c), also apply to clean alternative fuel conversions as defined in 40 CFR 85.502, of all model year light-duty vehicles, light-duty trucks, and medium-duty passenger vehicles. Manufacturers that qualify as a small business according to the requirements of § 86.1801–12(j) are exempt from the emission standards in this section. Manufacturers that have submitted a declaration for a model year according to the requirements of § 86.1801–12(k) for which approval has been granted by the Administrator are conditionally exempt from the emission standards in paragraphs (c) through (e) of this section for the approved model year.

(2) The standards specified in this section apply for testing at both low-altitude conditions and high-altitude conditions. However, manufacturers must submit an engineering evaluation indicating that common calibration approaches are utilized at high altitude instead of performing testing for certification, consistent with § 86.1829. Any deviation from low altitude emission control practices must be included in the auxiliary emission control device (AECD) descriptions submitted at certification. Any AECD specific to high altitude requires engineering emission data for EPA evaluation to quantify any emission impact and determine the validity of the AECD.

(b) *Definitions.* For the purposes of this section, the following definitions shall apply:

(1) *Passenger automobile* means a motor vehicle that is a passenger automobile as that term is defined in 49 CFR 523.4.

(2) *Light truck* means a motor vehicle that is a non-passenger automobile as that term is defined in 49 CFR 523.5.

(3) Manufacturer has the meaning given by the Department of Transportation at 49 CFR 531.4.

(c) *Fleet average CO_2 standards for passenger automobiles and light trucks.* (1) For a given individual model year's production of passenger automobiles and light trucks, manufacturers must comply with a full useful life fleet average CO_2 standard calculated according to the provisions of this paragraph (c). Manufacturers must calculate separate full useful life fleet average CO_2 standards for their passenger automobile and light truck fleets, as those terms are defined in this section. Each manufacturer's fleet average CO_2 standards determined in this paragraph (c) shall be expressed in whole grams per mile, in the model year specified as applicable. Manufacturers eligible for and choosing to participate in the Temporary Leadtime Allowance Alternative Standards for qualifying manufacturers specified in paragraph (e) of this section shall not include vehicles subject to the Temporary Leadtime Allowance Alternative Standards in the calculations of their primary passenger automobile or light truck standards determined in this paragraph (c). Manufacturers shall demonstrate compliance with the applicable standards according to the provisions of § 86.1865.

(2) *Passenger automobiles*—(i) *Calculation of CO_2 target values for passenger automobiles.* A CO_2 target value shall be determined for each passenger automobile as follows:

(A) For passenger automobiles with a footprint of less than or equal to 41 square feet, the gram/mile CO_2 target value shall be selected for the appropriate model year from the following table:

Model year	CO_2 target value (grams/mile)
2012	244.0
2013	237.0
2014	228.0
2015	217.0
2016	206.0
2017	195.0
2018	185.0
2019	175.0
2020	166.0
2021	161.8
2022	159.0
2023	156.4
2024	153.7
2025	151.2
2026 and later	148.6

(B) For passenger automobiles with a footprint of greater than 56 square feet, the gram/mile CO_2 target value shall be selected for the appropriate model year from the following table:

Model year	CO_2 target value (grams/mile)
2012	315.0
2013	307.0
2014	299.0
2015	288.0
2016	277.0
2017	263.0
2018	250.0
2019	238.0
2020	226.0
2021	220.9
2022	217.3
2023	213.7
2024	210.2
2025	206.8
2026 and later	203.4

(C) For passenger automobiles with a footprint that is greater than 41 square feet and less than or equal to 56 square feet, the gram/mile CO_2 target value shall be calculated using the following equation and rounded to the nearest 0.1 grams/mile, except that for any vehicle footprint the maximum CO_2 target value shall be the value specified for the same model year in paragraph (c)(2)(i)(B) of this section:

$$\text{Target } CO_2 = [a \times f] + b$$

Where: f is the vehicle footprint, as defined in § 86.1803; and a *and* b are selected from the following table for the appropriate model year:

Model year	a	b
2012	4.72	50.5
2013	4.72	43.3
2014	4.72	34.8
2015	4.72	23.4
2016	4.72	12.7
2017	4.53	8.9

Model year	a	b
2018	4.35	6.5
2019	4.17	4.2
2020	4.01	1.9
2021	3.94	0.2
2022	3.88	−0.1
2023	3.82	−0.4
2024	3.77	−0.6
2025	3.71	−0.9
2026 and later	3.65	−1.2

(ii) *Calculation of the fleet average CO_2 standard for passenger automobiles.* In each model year manufacturers must comply with the CO_2 exhaust emission standard for their passenger automobile fleet, calculated for that model year as follows:

(A) A CO_2 target value shall be determined according to paragraph (c)(2)(i) of this section for each unique combination of model type and footprint value.

(B) Each CO_2 target value, determined for each unique combination of model type and footprint value, shall be multiplied by the total production of that model type/footprint combination for the appropriate model year.

(C) The resulting products shall be summed, and that sum shall be divided by the total production of passenger automobiles in that model year. The result shall be rounded to the nearest whole gram per mile. This result shall be the applicable fleet average CO_2 standard for the manufacturer's passenger automobile fleet.

(3) *Light trucks*—(i) *Calculation of CO_2 target values for light trucks.* A CO_2 target value shall be determined for each light truck as follows:

(A) For light trucks with a footprint of less than or equal to 41 square feet, the gram/mile CO_2 target value shall be selected for the appropriate model year from the following table:

Model year	CO_2 target value (grams/mile)
2012	294.0
2013	284.0
2014	275.0
2015	261.0
2016	247.0
2017	238.0
2018	227.0
2019	220.0
2020	212.0
2021	206.5
2022	203.0
2023	199.6
2024	196.2
2025	193.2
2026 and later	189.9

(B) For light trucks with a footprint that is greater than 41 square feet and less than or equal to the maximum footprint value specified in the table below for each model year, the gram/mile CO_2 target value shall be calculated using the following equation and rounded to the nearest 0.1 grams/mile, except that for any vehicle footprint the maximum CO_2 target value shall be the value specified for the same model year in paragraph (c)(3)(i)(D) of this section:

$$\text{Target } CO_2 = (a \times f) + b$$

Where:

f is the footprint, as defined in § 86.1803; and a *and* b are selected from the following table for the appropriate model year:

Model year	Maximum footprint	a	b
2012	66.0	4.04	128.6
2013	66.0	4.04	118.7
2014	66.0	4.04	109.4
2015	66.0	4.04	95.1
2016	66.0	4.04	81.1
2017	50.7	4.87	38.3
2018	60.2	4.76	31.6
2019	66.4	4.68	27.7
2020	68.3	4.57	24.6
2021	68.3	4.51	21.5
2022	68.3	4.44	20.6
2023	68.3	4.37	20.2
2024	68.3	4.31	19.6
2025	68.3	4.23	19.6
2026 and later	68.3	4.17	19.0

(C) For light trucks with a footprint that is greater than the minimum footprint value specified in the table below and less than or equal to the maximum footprint value specified in the table below for each model year, the gram/mile CO_2 target value shall be calculated using the following equation and rounded to the nearest 0.1 grams/mile, except that for any vehicle footprint the maximum CO_2 target value shall be the value specified for the same model year in paragraph (c)(3)(i)(D) of this section:

$$\text{Target } CO_2 = (a \times f) + b$$

Where:

f is the footprint, as defined in § 86.1803; and a and b are selected from the following table for the appropriate model year:

Model year	Minimum footprint	Maximum footprint	a	b
2017	50.7	66.0	4.04	80.5
2018	60.2	66.0	4.04	75.0

(D) For light trucks with a footprint greater than the minimum value specified in the table below for each model year, the gram/mile CO_2 target value shall be selected for the appropriate model year from the following table:

Model year	Minimum footprint	CO_2 target value (grams/mile)
2012	66.0	395.0
2013	66.0	385.0
2014	66.0	376.0
2015	66.0	362.0
2016	66.0	348.0
2017	66.0	347.0
2018	66.0	342.0
2019	66.4	339.0
2020	68.3	337.0
2021	68.3	329.4
2022	68.3	324.1
2023	68.3	318.9
2024	68.3	313.7
2025	68.3	308.7
2026 and later	68.3	303.7

(ii) *Calculation of fleet average CO_2 standards for light trucks.* In each model year manufacturers must comply with the CO_2 exhaust emission standard for their light truck fleet, calculated for that model year as follows:

(A) A CO_2 target value shall be determined according to paragraph (c)(3)(i) of this section for each unique combination of model type and footprint value.

(B) Each CO_2 target value, which represents a unique combination of model type and footprint value, shall be multiplied by the total production of that model type/footprint combination for the appropriate model year.

(C) The resulting products shall be summed, and that sum shall be divided by the total production of light trucks in that model year. The result shall be rounded to the nearest whole gram per mile. This result shall be the applicable fleet average CO_2 standard for the manufacturer's light truck fleet.

(4) *Emergency vehicles.* Emergency vehicles may be excluded from the emission standards described in this section. The manufacturer must notify the Administrator that they are making such an election in the model year reports required under § 600.512 of this chapter. Such vehicles should be excluded from both the calculation of the fleet average standard for a manufacturer under this paragraph (c) and from the calculation of the fleet average carbon-related exhaust emissions in § 600.510–12.

(d) *In-use CO_2 exhaust emission standards.* The in-use CO_2 exhaust emission standard shall be the combined city/highway carbon-related exhaust emission value calculated for the appropriate vehicle carline/subconfiguration according to the provisions of § 600.113–12(g)(4) of this chapter multiplied by 1.1 and rounded to the nearest whole gram per mile. For in-use vehicle carlines/subconfigurations for which a combined city/highway carbon-related exhaust emission value was not determined under § 600.113–12(g)(4) of this chapter, the in-use CO_2 exhaust emission standard shall be the combined city/highway carbon-related exhaust emission value calculated according to the provisions of § 600.208 of this chapter for the vehicle model type (except that total model year production data shall be used instead of sales projections) multiplied by 1.1 and rounded to

the nearest whole gram per mile. For vehicles that are capable of operating on multiple fuels, except plug-in hybrid electric vehicles, a separate in-use standard shall be determined for each fuel that the vehicle is capable of operating on. These standards apply to in-use testing performed by the manufacturer pursuant to regulations at §§ 86.1845 and 86.1846 and to in-use testing performed by EPA.

(e) *Temporary Lead Time Allowance Alternative Standards.* (1) The interim fleet average CO_2 standards in this paragraph (e) are optionally applicable to each qualifying manufacturer, where the terms ''sales'' or ''sold'' as used in this paragraph (e) means vehicles produced for U.S. sale, where ''U.S.'' means the states and territories of the United States.

(i) A qualifying manufacturer is a manufacturer with sales of 2009 model year combined passenger automobiles and light trucks of greater than zero and less than 400,000 vehicles that elects to participate in the Temporary Leadtime Allowance Alternative Standards described in this paragraph (e).

(A) If a manufacturer sold less than 400,000 but more than zero 2009 model year combined passenger automobiles and light trucks while under the control of another manufacturer, where those 2009 model year passenger automobiles and light trucks bore the brand of the producing manufacturer, and where the producing manufacturer became independent no later than December 31, 2010, the producing manufacturer is a qualifying manufacturer.

(B) In the case where two or more qualifying manufacturers combine as the result of merger or the purchase of 50 percent or more of one or more companies by another company, and if the combined 2009 model year sales of the merged or combined companies is less than 400,000 but more than zero (combined passenger automobiles and light trucks), the corporate entity formed by the combination of two or more qualifying manufacturers shall continue to be a qualifying manufacturer, except the provisions of paragraph (e)(1)(i)(D) shall apply in the case where one of the merging companies elects to voluntarily opt out of the Temporary Leadtime Allowance Alternative Standards as allowed under paragraph (e)(1)(iv) of this section. The total number of vehicles that the corporate entity is allowed to include under the Temporary Leadtime Allowance Alternative Standards shall be determined by paragraph (e)(2) or (e)(3) of this section, where sales is the total combined 2009 model year sales of all of the merged or combined companies. Vehicles sold by the companies that combined by merger/acquisition to form the corporate entity that were subject to the Temporary Leadtime Allowance Alternative Standards in paragraph (e)(4) of this section prior to the merger/acquisition shall be combined to determine the remaining number of vehicles that the corporate entity may include under the Temporary Leadtime Allowance Alternative Standards in this paragraph (e).

(C) In the case where two or more manufacturers combine as the result of merger or the purchase of 50 percent or more of one or more companies by another company, and if the combined 2009 model year sales of the merged or combined companies is equal to or greater than 400,000 (combined passenger automobiles and light trucks), the new corporate entity formed by the combination of two or more manufacturers is not a qualifying manufacturer. Such a manufacturer shall meet the emission standards in paragraph (c) of this section beginning with the model year that is numerically two years greater than the calendar year in which the merger/acquisition(s) took place.

(D) In the case where two or more manufacturers combine as the result of merger or the purchase of 50 percent or more of one or more companies by another company, where one of the manufacturers chooses to voluntarily opt out of the Temporary Leadtime Allowance Alternative Standards under the provisions of paragraph (e)(1)(iv) of this section, the new corporate entity formed by the combination of two or more manufacturers is not a qualifying manufacturer. Such a manufacturer shall meet the emission standards in paragraph (c) of this section beginning

with the model year that is numerically two years greater than the calendar year in which the merger/acquisition(s) took place. If one or more of the merged or combined manufacturers was complying with the Temporary Leadtime Allowance Alternative Standards prior to the merger/combination, that manufacturer is no longer eligible for the Temporary Leadtime Allowance Alternative Standards beginning with the model year that is numerically two years greater than the calendar year in which the merger/acquisition(s) took place. The cumulative number of vehicles that such a manufacturer may include in the Temporary Leadtime Allowance Alternative Standards, including those that were included by all merged manufacturers prior to the merger/acquisition, is limited to 100,000.

(ii) For the purposes of making the determination in paragraph (e)(1)(i) of this section, ''manufacturer'' shall mean that term as defined at 49 CFR 531.4 and as that definition was applied to the 2009 model year for the purpose of determining compliance with the 2009 corporate average fuel economy standards at 49 CFR parts 531 and 533.

(iii) A qualifying manufacturer may not use these Temporary Leadtime Allowance Alternative Standards until they have used all available banked credits and/or credits available for transfer accrued under § 86.1865–12(k). A qualifying manufacturer with a net positive credit balance calculated under § 86.1865–12(k) in any model year after considering all available credits either generated, carried forward from a prior model year, transferred from other averaging sets, or obtained from other manufacturers, may not use these Temporary Leadtime Allowance Alternative Standards in such model year.

(iv) In the event of a merger, acquisition, or combination with another manufacturer, a qualifying manufacturer that has not certified any vehicles to the Temporary Leadtime Allowance Alternative Standards in any model year may voluntarily opt out of the Temporary Leadtime Allowance Alternative Standards. A manufacturer making this election must notify EPA in writing of their intent prior to the end of the model year in which a merger or combination with another manufacturer becomes effective. The notification must indicate that the manufacturer is electing to not use the Temporary Leadtime Allowance Alternative Standards in any model year, and that any manufacturers that are either purchased by or merged with the manufacturer making this election must also meet the emission standards in paragraph (c) of this section beginning with the model year that is numerically two years greater than the calendar year in which the merger/acquisition(s) took place.

(2) Qualifying manufacturers may select any combination of 2012 through 2015 model year passenger automobiles and/or light trucks to include under the Temporary Leadtime Allowance Alternative Standards determined in this paragraph (e) up to a cumulative total of 100,000 vehicles. Vehicles selected to comply with these standards shall not be included in the calculations of the manufacturer's fleet average standards under paragraph (c) of this section.

(3)(i) Qualifying manufacturers with sales of 2009 model year combined passenger automobiles and light trucks in the United States of greater than zero and less than 50,000 vehicles may select any combination of 2012 through 2015 model year passenger automobiles and/or light trucks to include under the Temporary Leadtime Allowance Alternative Standards determined in this paragraph (e) up to a cumulative total of 200,000 vehicles, and additionally may select up to 50,000 2016 model year vehicles to include under the Temporary Leadtime Allowance Alternative Standards determined in this paragraph (e). To be eligible for the provisions of this paragraph (e)(3) qualifying manufacturers must provide annual documentation of good-faith efforts made by the manufacturer to purchase credits from other manufacturers. Without such documentation, the manufacturer may use the Temporary Leadtime Allowance Alternative Standards according to the provisions of paragraph (e)(2) of this section, and the provisions of this paragraph (e)(3) shall not apply. Vehicles selected to

comply with these standards shall not be included in the calculations of the manufacturer's fleet average standards under paragraph (c) of this section.

(ii) Manufacturers that qualify in the 2016 model year for the expanded Temporary Leadtime Allowance Alternative Standards described in paragraph (e)(3)(i) of this section, may, subject to certain restrictions, use an alternative compliance schedule that provides additional lead time to meet the standards in paragraph (c) of this section for the 2017 through 2020 model years.

(A) The alternative compliance schedule is as follows. In lieu of the standards in paragraph (c) of this section that would otherwise be applicable to the model year shown in the first column of the table below, a qualifying manufacturer may comply with the standards in paragraph (c) of this section determined for the model year shown in the second column of the table. In the 2021 and later model years the manufacturer must meet the standards designated for each model year in paragraph (c) of this section.

Model year	Applicable standards
2017	2016
2018	2016
2019	2018
2020	2019

(B) A manufacturer using the alternative compliance schedule in paragraph (e)(3)(ii) of this section may not sell or otherwise transfer credits generated in years when the alternative phase-in is used to other manufacturers. Other provisions in § 86.1865 regarding credit banking, deficit carry-forward, and within-manufacturer transfers across fleets apply.

(4) To calculate the applicable Temporary Leadtime Allowance Alternative Standards, qualifying manufacturers shall determine the fleet average standard separately for the passenger automobiles and light trucks selected by the manufacturer to be subject to the Temporary Leadtime Allowance Alternative Standards, subject to the limitations expressed in paragraphs (e)(1) through (3) of this section.

(i) The Temporary Leadtime Allowance Alternative Standard applicable to qualified passenger automobiles as defined in § 600.002–08 of this chapter shall be the standard calculated using the provisions of paragraph (c)(2)(ii) of this section for the appropriate model year multiplied by 1.25 and rounded to the nearest whole gram per mile. For the purposes of applying paragraph (c)(2)(ii) of this section to determine the standard, the passenger automobile fleet shall be limited to those passenger automobiles subject to the Temporary Leadtime Allowance Alternative Standard.

(ii) The Temporary Leadtime Allowance Alternative Standard applicable to qualified light trucks (*i.e.* non-passenger automobiles as defined in § 600.002–08 of this chapter) shall be the standard calculated using the provisions of paragraph (c)(3)(ii) of this section for the appropriate model year multiplied by 1.25 and rounded to the nearest whole gram per mile. For the purposes of applying paragraph (c)(3)(ii) of this section to determine the standard, the light truck fleet shall be limited to those light trucks subject to the Temporary Leadtime Allowance Alternative Standard.

(5) Manufacturers choosing to optionally apply these standards are subject to the restrictions on credit banking and trading specified in § 86.1865–12.

(f) *Nitrous oxide (N_2O) and methane (CH_4) exhaust emission standards for passenger automobiles and light trucks.* Each manufacturer's fleet of combined passenger automobiles and light trucks must comply with N_2O and CH_4 standards using either the provisions of paragraph (f)(1), (2), or (3) of this section. Except with prior EPA approval, a manufacturer may not use the provisions of both paragraphs (f)(1) and (2) of this section in a model year. For example, a manufacturer may not use the provisions of paragraph (f)(1) of this section for their passenger automobile fleet and the provisions of paragraph (f)(2) for their light truck fleet in the same model year. The manufacturer may use the provisions of both paragraphs (f)(1) and (3) of this section in a model year. For example, a manufacturer may meet the N_2O standard in paragraph (f)(1)(i) of this section and an alternative CH_4 standard determined under paragraph (f)(3) of this section. Vehicles certified using the

N_2O data submittal waiver provisions of § 86.1829(b)(1)(iii)(G) are not required to be tested for N_2O under the in-use testing programs required by § 86.1845 and § 86.1846.

(1) *Standards applicable to each test group.* (i) Exhaust emissions of nitrous oxide (N_2O) shall not exceed 0.010 grams per mile at full useful life, as measured according to the Federal Test Procedure (FTP) described in subpart B of this part. Manufacturers may optionally determine an alternative N_2O standard under paragraph (f)(3) of this section. (ii) Exhaust emissions of methane (CH_4) shall not exceed 0.030 grams per mile at full useful life, as measured according to the Federal Test Procedure (FTP) described in subpart B of this part. Manufacturers may optionally determine an alternative CH_4 standard under paragraph (f)(3) of this section.

(2) *Include N_2O and CH_4 in fleet averaging program.* Manufacturers may elect to not meet the emission standards in paragraph (f)(1) of this section. Manufacturers making this election shall include N_2O *and* CH_4 emissions in the determination of their fleet average carbon-related exhaust emissions, as calculated in 40 CFR part 600, subpart F. Manufacturers using this option must include both N_2O and CH_4 full useful life values in the fleet average calculations for passenger automobiles and light trucks. Use of this option will account for N_2O and CH_4 emissions within the carbon-related exhaust emission value determined for each model type according to the provisions of 40 CFR part 600. This option requires the determination of full useful life emission values for both the Federal Test Procedure and the Highway Fuel Economy Test. Manufacturers selecting this option are not required to demonstrate compliance with the standards in paragraph (f)(1) of this section.

(3) *Optional use of alternative N_2O and/or CH_4 standards.* Manufacturers may select an alternative standard applicable to a test group, for either N_2O or CH_4, or both. For example, a manufacturer may choose to meet the N_2O standard in paragraph (f)(1)(i) of this section and an alternative CH_4 standard in lieu of the standard in paragraph (f)(1)(ii) of this section. The alternative standard for each pollutant must be greater than the applicable exhaust emission standard specified in paragraph (f)(1) of this section. Alternative N_2O and CH_4 standards apply to emissions measured according to the Federal Test Procedure (FTP) described in Subpart B of this part for the full useful life, and become the applicable certification and in-use emission standard(s) for the test group. Manufacturers using an alternative standard for N_2O and/or CH_4 must calculate emission debits according to the provisions of paragraph (f)(4) of this section for each test group/alternative standard combination. Debits must be included in the calculation of total credits or debits generated in a model year as required under § 86.1865–12(k)(5). For flexible fuel vehicles (or other vehicles certified for multiple fuels) you must meet these alternative standards when tested on any applicable test fuel type.

(4) *CO_2-equivalent debits.* CO_2-equivalent debits for test groups using an alternative N_2O and/or CH_4 standard as determined under paragraph (f)(3) of this section shall be calculated according to the following equation and rounded to the nearest whole megagram:

$$\text{Debits} = [\text{GWP} \times (\text{Production}) \times (\text{AltStd}—\text{Std}) \times \text{VLM}] \div 1{,}000{,}000$$

Where:

Debits = CO_2-equivalent debits for N_2O or CH_4, in Megagrams, for a test group using an alternative N_2O or CH_4 standard, rounded to the nearest whole Megagram;

GWP = 25 if calculating CH_4 debits and 298 if calculating N_2O debits;

Production = The number of vehicles of that test group domestically produced plus those imported as defined in § 600.511 of this chapter;

AltStd = The alternative standard (N_2O or CH_4) selected by the manufacturer under paragraph (f)(3) of this section;

Std = The exhaust emission standard for N_2O or CH_4 specified in paragraph (f)(1) of this section; and

VLM = 195,264 for passenger automobiles and 225,865 for light trucks.

(g) *Alternative fleet average standards for manufacturers with limited U.S. sales.* Manufacturers meeting the criteria in this paragraph (g) may request that

the Administrator establish alternative fleet average CO_2 standards that would apply instead of the standards in paragraph (c) of this section. The provisions of this paragraph (g) are applicable only to the 2017 and later model years. A manufacturer that has sought and received EPA approval for alternative standards for the 2017 model year may, at their option, choose to comply with those standards in the 2015 and 2016 model years in lieu of requesting a conditional exemption under § 86.1801(k).

(1) *Eligibility for alternative standards.* Eligibility as determined in this paragraph (g) shall be based on the total sales of combined passenger automobiles and light trucks. The terms ''sales'' and ''sold'' as used in this paragraph (g) shall mean vehicles produced for U.S. sale, where ''U.S.'' means the states and territories of the United States. For the purpose of determining eligibility the sales of related companies shall be aggregated according to the provisions of § 86.1838–01(b)(3), or, if a manufacturer has been granted operational independence status under § 86.1838(d), eligibility shall be based on vehicle production of that manufacturer. To be eligible for alternative standards established under this paragraph (g), the manufacturer's average sales for the three most recent consecutive model years must remain below 5,000. If a manufacturer's average sales for the three most recent consecutive model years exceeds 4999, the manufacturer will no longer be eligible for exemption and must meet applicable emission standards starting with the model year according to the provisions in this paragraph (g)(1).

(i) If a manufacturer's average sales for three consecutive model years exceeds 4999, and if the increase in sales is the result of corporate acquisitions, mergers, or purchase by another manufacturer, the manufacturer shall comply with the emission standards described in paragraph (c) of this section, as applicable, beginning with the first model year after the last year of the three consecutive model years.

(ii) If a manufacturer's average sales for three consecutive model years exceeds 4999 and is less than 50,000, and if the increase in sales is solely the result of the manufacturer's expansion in vehicle production (not the result of corporate acquisitions, mergers, or purchase by another manufacturer), the manufacturer shall comply with the emission standards described in paragraph (c), of this section, as applicable, beginning with the second model year after the last year of the three consecutive model years.

(2) *Requirements for new entrants into the U.S. market.* New entrants are those manufacturers without a prior record of automobile sales in the United States and without prior certification to (or exemption from, under § 86.1801–12(k)) greenhouse gas emission standards in § 86.1818–12. In addition to the eligibility requirements stated in paragraph (g)(1) of this section, new entrants must meet the following requirements:

(i) In addition to the information required under paragraph (g)(4) of this section, new entrants must provide documentation that shows a clear intent by the company to actually enter the U.S. market in the years for which alternative standards are requested. Demonstrating such intent could include providing documentation that shows the establishment of a U.S. dealer network, documentation of work underway to meet other U.S. requirements (e.g., safety standards), or other information that reasonably establishes intent to the satisfaction of the Administrator.

(ii) Sales of vehicles in the U.S. by new entrants must remain below 5,000 vehicles for the first three model years in the U.S. market, and in subsequent years the average sales for any three consecutive years must remain below 5,000 vehicles. Vehicles sold in violation of these limits within the first five model years will be considered not covered by the certificate of conformity and the manufacturer will be subject to penalties on an individual-vehicle basis for sale of vehicles not covered by a certificate. In addition, violation of these limits will result in loss of eligibility for alternative standards until such point as the manufacturer demonstrates two consecutive model years of sales below 5,000 automobiles. After the first five model years, the eligibility provisions in paragraph (g)(1) of

this section apply, where violating the sales thresholds is no longer a violation of the condition on the certificate, but is instead grounds for losing eligibility for alternative standards.

(iii) A manufacturer with sales in the most recent model year of less than 5,000 automobiles, but where prior model year sales were not less than 5,000 automobiles, is eligible to request alternative standards under this paragraph (g). However, such a manufacturer will be considered a new entrant and subject to the provisions regarding new entrants in this paragraph (g), except that the requirement to demonstrate an intent to enter the U.S. market in paragraph (g)(2)(i) of this section shall not apply.

(3) *How to request alternative fleet average standards.* Eligible manufacturers may petition for alternative standards for up to five consecutive model years if sufficient information is available on which to base such standards.

(i) To request alternative standards starting with the 2017 model year, eligible manufacturers must submit a completed application no later than July 30, 2013.

(ii) To request alternative standards starting with a model year after 2017, eligible manufacturers must submit a completed request no later than 36 months prior to the start of the first model year to which the alternative standards would apply.

(iii) The request must contain all the information required in paragraph (g)(4) of this section, and must be signed by a chief officer of the company. If the Administrator determines that the content of the request is incomplete or insufficient, the manufacturer will be notified and given an additional 30 days to amend the request.

(4) *Data and information submittal requirements.* Eligible manufacturers requesting alternative standards under this paragraph (g) must submit the following information to the Environmental Protection Agency. The Administrator may request additional information as she deems appropriate. The completed request must be sent to the Environmental Protection Agency at the following address: Director, Compliance and Innovative Strategies Division, U.S. Environmental Protection Agency, 2000 Traverwood Drive, Ann Arbor, Michigan 48105.

(i) *Vehicle model and fleet information.* (A) The model years to which the requested alternative standards would apply, limited to five consecutive model years.

(B) Vehicle models and projections of production volumes for each model year.

(C) Detailed description of each model, including the vehicle type, vehicle mass, power, footprint, powertrain, and expected pricing.

(D) The expected production cycle for each model, including new model introductions and redesign or refresh cycles.

(ii) *Technology evaluation information.* (A) The CO_2 reduction technologies employed by the manufacturer on each vehicle model, or projected to be employed, including information regarding the cost and CO_2 -reducing effectiveness. Include technologies that improve air conditioning efficiency and reduce air conditioning system leakage, and any ''off-cycle'' technologies that potentially provide benefits outside the operation represented by the Federal Test Procedure and the Highway Fuel Economy Test.

(B) An evaluation of comparable models from other manufacturers, including CO_2 results and air conditioning credits generated by the models. Comparable vehicles should be similar, but not necessarily identical, in the following respects: vehicle type, horsepower, mass, power-to-weight ratio, footprint, retail price, and any other relevant factors. For manufacturers requesting alternative standards starting with the 2017 model year, the analysis of comparable vehicles should include vehicles from the 2012 and 2013 model years, otherwise the analysis should at a minimum include vehicles from the most recent two model years.

(C) A discussion of the CO_2-reducing technologies employed on vehicles offered outside of the U.S. market but not available in the U.S., including a discussion as to why those vehicles and/or technologies are not being used to achieve CO_2 reductions for vehicles in the U.S. market.

(D) An evaluation, at a minimum, of the technologies projected by the Environmental Protection Agency in a final

rulemaking as those technologies likely to be used to meet greenhouse gas emission standards and the extent to which those technologies are employed or projected to be employed by the manufacturer. For any technology that is not projected to be fully employed, explain why this is the case.

(iii) *Alternative fleet average CO_2 standards.* (A) The most stringent CO_2 level estimated to be feasible for each model, in each model year, and the technological basis for this estimate.

(B) For each model year, a projection of the lowest feasible sales-weighted fleet average CO_2 value, separately for passenger automobiles and light trucks, and an explanation demonstrating that these projections are reasonable.

(C) A copy of any application, data, and related information submitted to NHTSA in support of a request for alternative Corporate Average Fuel Economy standards filed under 49 CFR Part 525.

(iv) *Information supporting eligibility.* (A) U.S. sales for the three previous model years and projected sales for the model years for which the manufacturer is seeking alternative standards.

(B) Information regarding ownership relationships with other manufacturers, including details regarding the application of the provisions of §86.1838–01(b)(3) regarding the aggregation of sales of related companies,

(5) *Alternative standards.* Upon receiving a complete application, the Administrator will review the application and determine whether an alternative standard is warranted. If the Administrator judges that an alternative standard is warranted, the Administrator will publish a proposed determination in the FEDERAL REGISTER to establish alternative standards for the manufacturer that the Administrator judges are appropriate. Following a 30 day public comment period, the Administrator will issue a final determination establishing alternative standards for the manufacturer. If the Administrator does not establish alternative standards for an eligible manufacturer prior to 12 months before the first model year to which the alternative standards would apply, the manufacturer may request an extension of the exemption under §86.1801–12(k) or an extension of previously approved alternative standards, whichever may apply.

(6) *Restrictions on credit trading.* Manufacturers subject to alternative standards approved by the Administrator under this paragraph (g) may not trade credits to another manufacturer. Transfers between car and truck fleets within the manufacturer are allowed, and the carry-forward provisions for credits and deficits apply.

(h) *Mid-term evaluation of standards.* No later than April 1, 2018, the Administrator shall determine whether the standards established in paragraph (c) of this section for the 2022 through 2025 model years are appropriate under section 202(a) of the Clean Air Act, in light of the record then before the Administrator. An opportunity for public comment shall be provided before making such determination. If the Administrator determines they are not appropriate, the Administrator shall initiate a rulemaking to revise the standards, to be either more or less stringent as appropriate.

(1) In making the determination required by this paragraph (h), the Administrator shall consider the information available on the factors relevant to setting greenhouse gas emission standards under section 202(a) of the Clean Air Act for model years 2022 through 2025, including but not limited to:

(i) The availability and effectiveness of technology, and the appropriate lead time for introduction of technology;

(ii) The cost on the producers or purchasers of new motor vehicles or new motor vehicle engines;

(iii) The feasibility and practicability of the standards;

(iv) The impact of the standards on reduction of emissions, oil conservation, energy security, and fuel savings by consumers;

(v) The impact of the standards on the automobile industry;

(vi) The impacts of the standards on automobile safety;

(vii) The impact of the greenhouse gas emission standards on the Corporate Average Fuel Economy standards and a national harmonized program; and

(viii) The impact of the standards on other relevant factors.

(2) The Administrator shall make the determination required by this paragraph (h) based upon a record that includes the following:

(i) A draft Technical Assessment Report addressing issues relevant to the standard for the 2022 through 2025 model years;

(ii) Public comment on the draft Technical Assessment Report;

(iii) Public comment on whether the standards established for the 2022 through 2025 model years are appropriate under section 202(a) of the Clean Air Act; and

(iv) Such other materials the Administrator deems appropriate.

(3) No later than November 15, 2017, the Administrator shall issue a draft Technical Assessment Report addressing issues relevant to the standards for the 2022 through 2025 model years.

(4) The Administrator will set forth in detail the bases for the determination required by this paragraph (h), including the Administrator's assessment of each of the factors listed in paragraph (h)(1) of this section.

[75 FR 25686, May 7, 2010, as amended at 76 FR 19874, Apr. 8, 2011; 76 FR 39521, July 6, 2011; 76 FR 57377, Sept. 15, 2011; 77 FR 63156, Oct. 15, 2012; 79 FR 23725, Apr. 28, 2014; 81 FR 73985, Oct. 25, 2016; 85 FR 25268, Apr. 30, 2020]

§ 86.1819 [Reserved]

§ 86.1819–14 Greenhouse gas emission standards for heavy-duty vehicles.

This section describes exhaust emission standards for CO_2, CH_4, and N_2O for heavy-duty vehicles. The standards of this section apply for model year 2014 and later vehicles that are chassis-certified with respect to criteria pollutants under this subpart S. Additional heavy-duty vehicles may be optionally subject to the standards of this section as allowed under paragraph (j) of this section. Any heavy-duty vehicles not subject to standards under this section are instead subject to greenhouse gas standards under 40 CFR part 1037, and engines installed in these vehicles are subject to standards under 40 CFR part 1036. If you are not the engine manufacturer, you must notify the engine manufacturer that its engines are subject to 40 CFR part 1036 if you intend to use their engines in vehicles that are not subject to standards under this section. Vehicles produced by small businesses may be excluded from the standards of this section as described in paragraph (k)(5) of this section.

(a) *Fleet-average CO_2 emission standards.* Fleet-average CO_2 emission standards apply for the full useful life for each manufacturer as follows:

(1) Calculate a work factor, *WF*, for each vehicle subconfiguration (or group of subconfigurations as allowed under paragraph (a)(4) of this section), rounded to the nearest pound, using the following equation:

$$WF = 0.75 \times (GVWR - Curb\ Weight + xwd) + 0.25 \times (GCWR - GVWR)$$

Where:

xwd = 500 pounds if the vehicle has four-wheel drive or all-wheel drive; *xwd* = 0 pounds for all other vehicles.

(2) Using the appropriate work factor, calculate a target value for each vehicle subconfiguration (or group of subconfigurations as allowed under paragraph (a)(4) of this section) you produce using one of the following equations, or the phase-in provisions in paragraph (k)(4) of this section, rounding to the nearest whole g/mile:

(i) For model year 2027 and later vehicles with spark-ignition engines: $CO_2\ Target$ (g/mile) = $0.0369 \times WF + 284$

(ii) For model year 2027 and later vehicles with compression-ignition engines or with no engines (such as electric vehicles and fuel cell vehicles): $CO_2\ Target$ (g/mile) = $0.0348 \times WF + 268$

(3) Calculate a production-weighted average of the target values and round it to the nearest whole g/mile. This is your fleet-average standard. All vehicles subject to the standards of this section form a single averaging set. Use the following equation to calculate your fleet-average standard from the target value for each vehicle subconfiguration ($Target_i$) and U.S.-directed production volume of each vehicle subconfiguration for the given model year ($Volume_i$):

$$\text{Fleet-Average Standard} = \frac{\sum\left[\text{Target}_i \times \text{Volume}_i\right]}{\sum\left[\text{Volume}_i\right]}$$

(4) You may group subconfigurations within a configuration together for purposes of calculating your fleet-average standard as follows:

(i) You may group together subconfigurations that have the same equivalent test weight (ETW), GVWR, and GCWR. Calculate your work factor and target value assuming a curb weight equal to two times ETW minus GVWR.

(ii) You may group together other subconfigurations if you use the lowest target value calculated for any of the subconfigurations.

(5) The standards specified in this section apply for testing at both low-altitude conditions and high-altitude conditions. However, manufacturers must submit an engineering evaluation indicating that common calibration approaches are utilized at high altitude instead of performing testing for certification, consistent with § 86.1829. Any deviation from low altitude emission control practices must be included in the auxiliary emission control device (AECD) descriptions submitted at certification. Any AECD specific to high altitude requires engineering emission data for EPA evaluation to quantify any emission impact and determine the validity of the AECD.

(b) *Production and in-use CO_2 standards.* Each vehicle you produce that is subject to the standards of this section has an ''in-use'' CO_2 standard that is calculated from your test result and that applies for selective enforcement audits and in-use testing. This in-use CO_2 standard for each vehicle is equal to the applicable deteriorated emission level multiplied by 1.10 and rounded to the nearest whole g/mile.

(c) *N_2O and CH_4 standards.* Except as allowed under this paragraph (c), all vehicles subject to the standards of this section must comply with an N_2O standard of 0.05 g/mile and a CH_4 standard of 0.05 g/mile when calculated according to the provisions of paragraph (d)(4) of this section. You may specify CH_4 and/or N_2O alternative standards using CO_2 emission credits instead of these otherwise applicable emission standards for one or more test groups. To do this, calculate the CH_4 and/or N_2O emission credits needed (negative credits) using the equation in this paragraph (c) based on the FEL(s) you specify for your vehicles during certification. You must adjust the calculated emissions by the global warming potential (*GWP*): *GWP* equals 34 for CH_4 from model year 2021 and later vehicles, 25 for CH_4 from earlier vehicles, and 298 for N_2O. This means, for example, that you must use 298 Mg of positive CO_2 credits to offset 1 Mg of negative N_2O credits. Note that § 86.1818–12(f) does not apply for vehicles subject to the standards of this section. Calculate credits using the following equation, rounded to the nearest whole number:

$$CO_2\ \textit{Credits Needed}\ (\text{Mg}) = [(FEL - Std) \times (\textit{U.S.-directed production volume}) \times (\textit{Useful Life})] \times (GWP) \div 1{,}000{,}000$$

(d) *Compliance provisions.* The following compliance provisions apply instead of other provisions described in this subpart S:

(1) The CO_2 standards of this section apply with respect to CO_2 emissions, not with respect to carbon-related exhaust emissions (CREE).

(2) The following general credit provisions apply:

(i) Credits you generate under this section may be used only to offset credit deficits under this section. You may bank credits for use in a future model year in which your average CO_2 level exceeds the standard. You may trade credits to another manufacturer according to § 86.1865–12(k)(8). Before you bank or trade credits, you must apply any available credits to offset a deficit if the deadline to offset that credit deficit has not yet passed.

(ii) Vehicles subject to the standards of this section are included in a single greenhouse gas averaging set separate from any averaging set otherwise included in this subpart S.

(iii) Banked CO_2 credits keep their full value for five model years after the year in which they were generated. Unused credits may not be used for more than five model years after the model year in which the credits are generated.

(3) Special credit and incentive provisions related to air conditioning in §§ 86.1867 and 86.1868 do not apply for vehicles subject to the standards of this section.

(4) Measure emissions using the procedures of subpart B of this part and 40 CFR part 1066. Determine separate emission results for the Federal Test Procedure (FTP) described in 40 CFR 1066.801(c)(1) and the Highway Fuel Economy Test (HFET) described in 40 CFR 1066.801(c)(3). Calculate composite emission results from these two test cycles for demonstrating compliance with the CO_2, N_2O, and CH_4 standards based on a weighted average of the FTP (55%) and HFET (45%) emission results. Note that this differs from the way the criteria pollutant standards apply.

(5) Apply an additive deterioration factor of zero to measured CO_2 emissions unless good engineering judgment indicates that emissions are likely to deteriorate in use. Use good engineering judgment to develop separate deterioration factors for N_2O and CH_4.

(6) Credits are calculated using the useful life value (in miles) in place of ''vehicle lifetime miles'' as specified in § 86.1865. Calculate a total credit or debit balance in a model year by adding credits and debits from § 86.1865–12(k)(4), subtracting any CO_2-equivalent debits for N_2O or CH_4 calculated according to paragraph (c) of this section, and adding any of the following credits:

(i) Off-cycle technology credits according to paragraph (d)(13) of this section.

(ii) Early credits from vehicles certified under paragraph (k)(2) of this section.

(iii) Advanced-technology credits according to paragraph (k)(7) of this section.

(7) [Reserved]

(8) The provisions of § 86.1818 do not apply.

(9) Calculate your fleet-average emission rate consistent with good engineering judgment and the provisions of § 86.1865. The following additional provisions apply:

(i) Unless we approve a lower number, you must test at least ten subconfigurations. If you produce more than 100 subconfigurations in a given model year, you must test at least ten percent of your subconfigurations. For purposes of this paragraph (d)(9)(i), count carryover tests, but do not include analytically derived CO_2 emission rates, data substitutions, or other untested allowances. We may approve a lower number of tests for manufacturers that have limited product offerings, or low sales volumes. Note that good engineering judgment and other provisions of this part may require you to test more subconfigurations than these minimum values.

(ii) The provisions of paragraph (g) of this section specify how you may use analytically derived CO_2 emission rates.

(iii) At least 90 percent of final production volume at the configuration level must be represented by test data (real, data substituted, or analytical).

(iv) Perform fleet-average CO_2 calculations as described in § 86.1865 and 40 CFR part 600, with the following exceptions:

(A) Use CO_2 emissions values for all test results, intermediate calculations, and fleet average calculations instead of the carbon-related exhaust emission (CREE) values specified in this subpart S and 40 CFR part 600.

(B) Perform intermediate CO_2 calculations for subconfigurations within each configuration using the subconfiguration and configuration definitions in paragraph (d)(12) of this section.

(C) Perform intermediate CO_2 calculations for configurations within each test group and transmission type (instead of configurations within each base level and base levels within each model type). Use the configuration definition in paragraph (d)(12)(i) of this section.

(D) Do not perform intermediate CO_2 calculations for each base level or for each model type. Base level and model

type CO_2 calculations are not applicable to heavy-duty vehicles subject to standards in this section.

(E) Determine fleet average CO_2 emissions for heavy-duty vehicles subject to standards in this section as described in 40 CFR 600.510–12(j), except that the calculations must be performed on the basis of test group and transmission type (instead of the model-type basis specified in the light-duty vehicle regulations), and the calculations for dual-fuel, multi-fuel, and flexible-fuel vehicles must be consistent with the provisions of paragraph (d)(10)(i) of this section.

(10) For dual-fuel, multi-fuel, and flexible-fuel vehicles, perform exhaust testing on each fuel type (for example, gasoline and E85).

(i) For your fleet-average calculations in model year 2016 and later, use either the conventional-fueled CO_2 emission rate or a weighted average of your emission results as specified in 40 CFR 600.510–12(k) for light-duty trucks. For your fleet-average calculations before model year 2016, apply an equal weighting of CO_2 emission results from alternative and conventional fuels.

(ii) If you certify to an alternate standard for N_2O or CH_4 emissions, you may not exceed the alternate standard when tested on either fuel.

(11) Test your vehicles with an equivalent test weight based on its Adjusted Loaded Vehicle Weight (ALVW). Determine equivalent test weight from the ALVW as specified in 40 CFR 1066.805; round ALVW values above 14,000 pounds to the nearest 500 pound increment.

(12) The following definitions apply for the purposes of this section:

(i) *Configuration* means a subclassification within a test group based on engine code, transmission type and gear ratios, final drive ratio, and other parameters we designate. Engine code means the combination of both ''engine code'' and ''basic engine'' as defined in 40 CFR 600.002.

(ii) *Subconfiguration* means a unique combination within a vehicle configuration (as defined in this paragraph (d)(12)) of equivalent test weight, road-load horsepower, and any other operational characteristics or parameters that we determine may significantly affect CO_2 emissions within a vehicle configuration. Note that for vehicles subject to standards of this section, equivalent test weight (ETW) is based on the ALVW of the vehicle as outlined in paragraph (d)(11) of this section.

(13) This paragraph (d)(13) applies for CO_2 reductions resulting from technologies that were not in common use before 2010 that are not reflected in the specified test procedures. While you are not required to prove that such technologies were not in common use with heavy-duty vehicles before model year 2010, we will not approve your request if we determine they do not qualify. These may be described as off-cycle or innovative technologies. We may allow you to generate emission credits consistent with the provisions of § 86.1869–12(c) and (d). The 5-cycle methodology is not presumed to be preferred over alternative methodologies described in § 86.1869–12(d).

(14) You must submit pre-model year reports before you submit your applications for certification for a given model year. Unless we specify otherwise, include the information specified for pre-model year reports in 49 CFR 535.8.

(15) You must submit a final report within 90 days after the end of the model year. Unless we specify otherwise, include applicable information identified in § 86.1865–12(l), 40 CFR 600.512, and 49 CFR 535.8(e). The final report must include at least the following information:

(i) Model year.

(ii) Applicable fleet-average CO_2 standard.

(iii) Calculated fleet-average CO_2 value and all the values required to calculate the CO_2 value.

(iv) Number of credits or debits incurred and all values required to calculate those values.

(v) Resulting balance of credits or debits.

(vi) N_2O emissions.

(vii) CH_4 emissions.

(viii) Total and percent leakage rates under paragraph (h) of this section.

(16) You may apply the provisions for delegated assembly as described in 40 CFR 1037.621.

(17) You may calculate emission rates for weight increments less than

the 500 pound increment specified for test weight. This does not change the applicable test weights.

(i) Use the ADC equation in paragraph (g) of this section to adjust your emission rates for vehicles in increments of 50, 100, or 250 pounds instead of the 500 test-weight increments. Adjust emissions to the midpoint of each increment. This is the equivalent emission weight. For example, vehicles with a test weight basis of 11,751 to 12,250 pounds (which have an equivalent test weight of 12,000 pounds) could be regrouped into 100 pound increments as follows:

Test weight basis	Equivalent emission weight	Equivalent test weight
11,751–11,850	11,800	12,000
11,851–11,950	11,900	12,000
11,951–12,050	12,000	12,000
12,051–12,150	12,100	12,000
12,151–12,250	12,200	12,000

(ii) You must use the same increment for all equivalent test weight classes across your whole product line in a given model year. You must also specify curb weight for calculating the work factor in a way that is consistent with your approach for determining test weight for calculating ADCs under this paragraph (d)(17).

(e) *Useful life*. The exhaust emission standards of this section apply for the full useful life, as described in § 86.1805.

(f) [Reserved]

(g) *Analytically derived CO_2 emission rates (ADCs)*. This paragraph (g) describes an allowance to use estimated (*i.e.*, analytically derived) CO_2 emission rates based on baseline test data instead of measured emission rates for calculating fleet-average emissions. Note that these ADCs are similar to ADFEs used for light-duty vehicles. Note also that *F* terms used in this paragraph (g) represent coefficients from the following road load equation:

$$Force = F_0 + F_1 \cdot (velocity) + F_2 \cdot (velocity)^2$$

(1) Except as specified in paragraph (g)(2) of this section, use the following equation to calculate the ADC of a new vehicle from road load force coefficients (*F*0, *F*1, *F*2), axle ratio, and test weight:

$$ADC = CO2_{base} + 2.18 \cdot \Delta F0 + 37.4 \cdot \Delta F1 + 2257 \cdot \Delta F2 + 189 \cdot \Delta AR + 0.0222 \cdot \Delta ETW$$

Where:

ADC = Analytically derived combined city/highway CO_2 emission rate (g/mile) for a new vehicle.

CO_{2base} = Combined city/highway CO_2 emission rate (g/mile) of a baseline vehicle.

$\Delta F0$ = *F*0 of the new vehicle − *F*0 of the baseline vehicle.

$\Delta F1$ = *F*1 of the new vehicle − *F*1 of the baseline vehicle.

$\Delta F2$ = *F*2 of the new vehicle − *F*2 of the baseline vehicle.

ΔAR = Axle ratio of the new vehicle − axle ratio of the baseline vehicle.

ΔETW = *ETW* of the new vehicle − *ETW* of the baseline vehicle.

(2) The purpose of this section is to accurately estimate CO_2 emission rates.

(i) You must apply the provisions of this section consistent with good engineering judgment. For example, do not use the equation in paragraph (g)(1) of this section where good engineering judgment indicates that it will not accurately estimate emissions. You may ask us to approve alternate equations that allow you to estimate emissions more accurately.

(ii) The analytically derived CO_2 equation in paragraph (g)(1) of this section may be periodically updated through publication of an EPA guidance document to more accurately characterize CO_2 emission levels for example, changes may be appropriate based on new test data, future technology changes, or to changes in future CO_2 emission levels. Any EPA guidance document will determine the model year that the updated equation takes effect. We will issue guidance no later than eight months before the effective model year. For example, model year

2014 may start January 2, 2013, so guidance for model year 2014 would be issued by May 1, 2012.

(3) You may select baseline test data without our advance approval if they meet all the following criteria:

(i) Vehicles considered for the baseline test must comply with all applicable emission standards in the model year associated with the ADC.

(ii) You must include in the pool of tests considered for baseline selection all official tests of the same or equivalent basic engine, transmission class, engine code, transmission code, engine horsepower, dynamometer drive wheels, and compression ratio as the ADC subconfiguration. Do not include tests in which emissions exceed any applicable standard.

(iii) Where necessary to minimize the CO_2 adjustment, you may supplement the pool with tests associated with worst-case engine or transmission codes and carryover or carry-across test groups. If you do, all the data that qualify for inclusion using the elected worst-case substitution (or carryover or carry-across) must be included in the pool as supplemental data (*i.e.*, individual test vehicles may not be selected for inclusion). You must also include the supplemental data in all subsequent pools, where applicable.

(iv) Tests previously used during the subject model year as baseline tests in ten other ADC subconfigurations must be eliminated from the pool.

(v) Select the tested subconfiguration with the smallest absolute difference between the ADC and the test CO_2 emission rate for combined emissions. Use this as the baseline test for the target ADC subconfiguration.

(4) You may ask us to allow you to use baseline test data not fully meeting the provisions of paragraph (g)(3) of this section.

(5) Calculate the ADC rounded to the nearest whole g/mile. Except with our advance approval, the downward adjustment of ADC from the baseline is limited to ADC values 20 percent below the baseline emission rate. The upward adjustment is not limited.

(6) You may not submit an ADC if an actual test has been run on the target subconfiguration during the certification process or on a development vehicle that is eligible to be declared as an emission-data vehicle.

(7) No more than 40 percent of the subconfigurations tested in your final CO_2 submission may be represented by ADCs.

(8) Keep the following records for at least five years, and show them to us if we ask to see them:

(i) The pool of tests.

(ii) The vehicle description and tests chosen as the baseline and the basis for the selection.

(iii) The target ADC subconfiguration.

(iv) The calculated emission rates.

(9) We may perform or order a confirmatory test of any subconfiguration covered by an ADC.

(10) Where we determine that you did not fully comply with the provisions of this paragraph (g), we may require that you comply based on actual test data and that you recalculate your fleet-average emission rate.

(h) *Air conditioning leakage*. Loss of refrigerant from your air conditioning systems may not exceed a total leakage rate of 11.0 grams per year or a percent leakage rate of 1.50 percent per year, whichever is greater. This applies for all refrigerants. Calculate the total leakage rate in g/year as specified in § 86.1867–12(a). Calculate the percent leakage rate as: [total leakage rate (g/yr)] ÷ [total refrigerant capacity (g)] × 100. Round your percent leakage rate to the nearest one-hundredth of a percent. For purpose of this requirement, ''refrigerant capacity'' is the total mass of refrigerant recommended by the vehicle manufacturer as representing a full charge. Where full charge is specified as a pressure, use good engineering judgment to convert the pressure and system volume to a mass.

(i) [Reserved]

(j) *Optional GHG certification under this subpart*. You may certify certain complete or cab-complete vehicles to the GHG standards of this section. All vehicles optionally certified under this paragraph (j) are deemed to be subject to the GHG standards of this section. Note that for vehicles above 14,000 pounds GVWR and at or below 26,000 pounds GVWR, GHG certification under this paragraph (j) does not affect

how you may or may not certify with respect to criteria pollutants.

(1) For GHG compliance, you may certify any complete or cab-complete spark-ignition vehicles above 14,000 pounds GVWR and at or below 26,000 pounds GVWR to the GHG standards of this section even though this section otherwise specifies that you may certify vehicles to the GHG standards of this section only if they are chassis-certified for criteria pollutants.

(2) You may apply the provisions of this section to cab-complete vehicles based on a complete sister vehicle. In unusual circumstances, you may ask us to apply these provisions to Class 2b or Class 3 incomplete vehicles that do not meet the definition of cab-complete.

(i) Except as specified in paragraph (j)(3) of this section, for purposes of this section, a complete sister vehicle is a complete vehicle of the same vehicle configuration as the cab-complete vehicle. You may not apply the provisions of this paragraph (j) to any vehicle configuration that has a four-wheel rear axle if the complete sister vehicle has a two-wheel rear axle.

(ii) Calculate the target value for fleet-average CO_2 emissions under paragraph (a) or (k)(4) of this section based on the work factor value that applies for the complete sister vehicle.

(iii) Test these cab-complete vehicles using the same equivalent test weight and other dynamometer settings that apply for the complete vehicle from which you used the work factor value (the complete sister vehicle). For GHG certification, you may submit the test data from that complete sister vehicle instead of performing the test on the cab-complete vehicle.

(iv) You are not required to produce the complete sister vehicle for sale to use the provisions of this paragraph (j)(2). This means the complete sister vehicle may be a carryover vehicle from a prior model year or a vehicle created solely for the purpose of testing.

(3) For GHG purposes, if a cab-complete vehicle is not of the same vehicle configuration as a complete sister vehicle due only to certain factors unrelated to coastdown performance, you may use the road-load coefficients from the complete sister vehicle for certification testing of the cab-complete vehicle, but you may not use emission data from the complete sister vehicle for certifying the cab-complete vehicle.

(k) *Interim provisions.* The following provisions apply instead of other provisions in this subpart:

(1) *Incentives for early introduction.* Manufacturers may voluntarily certify in model year 2013 (or earlier model years for electric vehicles) to the greenhouse gas standards that apply starting in model year 2014 as specified in 40 CFR 1037.150(a).

(2) *Early credits.* To generate early credits under this paragraph (k)(2) for any vehicles other than electric vehicles, you must certify your entire U.S.-directed fleet to these standards. If you calculate a separate fleet average for advanced-technology vehicles under paragraph (k)(7) of this section, you must certify your entire U.S.-directed production volume of both advanced and conventional vehicles within the fleet. If some test groups are certified after the start of the model year, you may generate credits only for production that occurs after all test groups are certified. For example, if you produce three test groups in an averaging set and you receive your certificates for those test groups on January 4, 2013, March 15, 2013, and April 24, 2013, you may not generate credits for model year 2013 for vehicles from any of the test groups produced before April 24, 2013. Calculate credits relative to the standard that would apply in model year 2014 using the applicable equations in this subpart and your model year 2013 U.S.-directed production volumes. These credits may be used to show compliance with the standards of this subpart for 2014 and later model years. We recommend that you notify us of your intent to use this provision before submitting your applications.

(3) *Compliance date.* Compliance with the standards of this section was optional before January 1, 2014 as specified in 40 CFR 1037.150(g).

(4) *Phase-in provisions.* Each manufacturer must choose one of the options specified in paragraphs (k)(4)(i) and (ii) of this section for phasing in the Phase

1 standards. Manufacturers must follow the schedule described in paragraph (k)(4)(iii) of this section for phasing in the Phase 2 standards.

(i) *Phase 1—Option 1.* You may implement the Phase 1 standards by applying CO_2 target values as specified in the following table for model year 2014 through 2020 vehicles:

TABLE 1 OF § 86.1819–14

Model year and engine cycle	Alternate CO_2 target (g/mile)
2014 Spark-Ignition	0.0482 × (WF) + 371
2015 Spark-Ignition	0.0479 × (WF) + 369
2016 Spark-Ignition	0.0469 × (WF) + 362
2017 Spark-Ignition	0.0460 × (WF) + 354
2018–2020 Spark-Ignition	0.0440 × (WF) + 339
2014 Compression-Ignition	0.0478 × (WF) + 368
2015 Compression-Ignition	0.0474 × (WF) + 366
2016 Compression-Ignition	0.0460 × (WF) + 354
2017 Compression-Ignition	0.0445 × (WF) + 343
2018–2020 Compression-Ignition	0.0416 × (WF) + 320

(ii) *Phase 1—Option 2.* You may implement the Phase 1 standards by applying CO_2 target values specified in the following table for model year 2014 through 2020 vehicles:

TABLE 2 OF § 86.1819–14

Model year and engine cycle	Alternate CO_2 target (g/mile)
2014 Spark-Ignition	0.0482 × (WF) + 371
2015 Spark-Ignition	0.0479 × (WF) + 369
2016–2018 Spark-Ignition	0.0456 × (WF) + 352
2019–2020 Spark-Ignition	0.0440 × (WF) + 339
2014 Compression-Ignition	0.0478 × (WF) + 368
2015 Compression-Ignition	0.0474 × (WF) + 366
2016–2018 Compression-Ignition	0.0440 × (WF) + 339
2019–2020 Compression-Ignition	0.0416 × (WF) + 320

(iii) *Phase 2.* Apply Phase 2 CO_2 target values as specified in the following table for model year 2021 through 2026 vehicles:

TABLE 3 OF § 86.1819–14

Model year and engine cycle	Alternate CO_2 target (g/mile)
2021 Spark-Ignition	0.0429 × (WF) + 331
2022 Spark-Ignition	0.0418 × (WF) + 322
2023 Spark-Ignition	0.0408 × (WF) + 314
2024 Spark-Ignition	0.0398 × (WF) + 306
2025 Spark-Ignition	0.0388 × (WF) + 299
2026 Spark-Ignition	0.0378 × (WF) + 291
2021 Compression-Ignition	0.0406 × (WF) + 312
2022 Compression-Ignition	0.0395 × (WF) + 304
2023 Compression-Ignition	0.0386 × (WF) + 297
2024 Compression-Ignition	0.0376 × (WF) + 289
2025 Compression-Ignition	0.0367 × (WF) + 282
2026 Compression-Ignition	0.0357 × (WF) + 275

(5) *Provisions for small manufacturers.* Standards apply on a delayed schedule for manufacturers meeting the small business criteria specified in 13 CFR 121.201 (NAICS code 336111); the employee and revenue limits apply to the total number employees and total revenue together for affiliated companies. Qualifying small manufacturers are not subject to the greenhouse gas

standards of this section for vehicles with a date of manufacture before January 1, 2022, as specified in 40 CFR 1037.150(c). In addition, small manufacturers producing vehicles that run on any fuel other than gasoline, E85, or diesel fuel may delay complying with every later standard under this part by one model year.

(6) *Alternate N_2O standards.* Manufacturers may show compliance with the N_2O standards using an engineering analysis. This allowance also applies for model year 2015 and later test groups carried over from model 2014 consistent with the provisions of § 86.1839. You may not certify to an N_2O FEL different than the standard without measuring N_2O emissions.

(7) *Advanced-technology credits.* Provisions for advanced-technology credits apply as described in 40 CFR 1037.615. If you generate credits from Phase 1 vehicles certified with advanced technology, you may multiply these credits by 1.50. If you generate credits from Phase 2 vehicles certified with advanced technology, you may multiply these credits by 3.5 for plug-in hybrid electric vehicles, 4.5 for electric vehicles, and 5.5 for fuel cell vehicles. Advanced-technology credits from Phase 1 vehicles may be used to show compliance with any standards of this part or 40 CFR part 1036 or part 1037, subject to the restrictions in 40 CFR 1037.740. Similarly, you may use up to 60,000 Mg per year of advanced-technology credits generated under 40 CFR 1036.615 or 1037.615 (from Phase 1 vehicles) to demonstrate compliance with the CO_2 standards in this section. Include vehicles generating credits in separate fleet-average calculations (and exclude them from your conventional fleet-average calculation). You must first apply these advanced-technology vehicle credits to any deficits for other vehicles in the averaging set before applying them to other averaging sets.

(8) *Loose engine sales.* This paragraph (k)(8) applies for model year 2023 and earlier spark-ignition engines with identical hardware compared with engines used in vehicles certified to the standards of this section, where you sell such engines as loose engines or as engines installed in incomplete vehicles that are not cab-complete vehicles. You may include such engines in a test group certified to the standards of this section, subject to the following provisions:

(i) Engines certified under this paragraph (k)(8) are deemed to be certified to the standards of 40 CFR 1036.108 as specified in 40 CFR 1036.150(j).

(ii) For 2020 and earlier model years, the maximum allowable U.S.-directed production volume of engines you sell under this paragraph (k)(8) in any given model year is ten percent of the total U.S-directed production volume of engines of that design that you produce for heavy-duty applications for that model year, including engines you produce for complete vehicles, cab-complete vehicles, and other incomplete vehicles. The total number of engines you may certify under this paragraph (k)(8), of all engine designs, may not exceed 15,000 in any model year. Engines produced in excess of either of these limits are not covered by your certificate. For example, if you produce 80,000 complete model year 2017 Class 2b pickup trucks with a certain engine and 10,000 incomplete model year 2017 Class 3 vehicles with that same engine, and you do not apply the provisions of this paragraph (k)(8) to any other engine designs, you may produce up to 10,000 engines of that design for sale as loose engines under this paragraph (k)(8). If you produced 11,000 engines of that design for sale as loose engines, the last 1,000 of them that you produced in that model year 2017 would be considered uncertified.

(iii) For model years 2021 through 2023, the U.S.-directed production volume of engines you sell under this paragraph (k)(8) in any given model year may not exceed 10,000 units.

(iv) This paragraph (k)(8) does not apply for engines certified to the standards of 40 CFR 1036.108.

(v) Label the engines as specified in 40 CFR 1036.135 including the following compliance statement: ''THIS ENGINE WAS CERTIFIED TO THE ALTERNATE GREENHOUSE GAS EMISSION STANDARDS OF 40 CFR 1036.150(j).'' List the test group name instead of an engine family name.

(vi) Vehicles using engines certified under this paragraph (k)(8) are subject

to the emission standards of 40 CFR 1037.105.

(vii) For certification purposes, your engines are deemed to have a CO_2 target value and test result equal to the CO_2 target value and test result for the complete vehicle in the applicable test group with the highest equivalent test weight, except as specified in paragraph (k)(8)(vii)(B) of this section. Use these values to calculate your target value, fleet-average emission rate, and in-use emission standard. Where there are multiple complete vehicles with the same highest equivalent test weight, select the CO_2 target value and test result as follows:

(A) If one or more of the CO_2 test results exceed the applicable target value, use the CO_2 target value and test result of the vehicle that exceeds its target value by the greatest amount.

(B) If none of the CO_2 test results exceed the applicable target value, select the highest target value and set the test result equal to it. This means that you may not generate emission credits from vehicles certified under this paragraph (k)(8).

(viii) Production and in-use CO_2 standards apply as described in paragraph (b) of this section.

(ix) N_2O and CH_4 standards apply as described in paragraph (c) of this section.

(x) State in your applications for certification that your test group and engine family will include engines certified under this paragraph (k)(8). This applies for your greenhouse gas vehicle test group and your criteria pollutant engine family. List in each application the name of the corresponding test group/engine family.

(9) *Credit adjustment for useful life.* For credits that you calculate based on a useful life of 120,000 miles, multiply any banked credits that you carry forward for use in model year 2021 and later by 1.25.

(10) *CO_2 rounding.* For model year 2014 and earlier vehicles, you may round measured and calculated CO_2 emission levels to the nearest 0.1 g/mile, instead of the nearest whole g/mile as specified in paragraphs (a), (b), and (g) of this section.

[81 FR 73895, Oct. 25, 2016]

§ 86.1820–01 Durability group determination.

This section applies to the grouping of vehicles into durability groups. Manufacturers shall divide their product line into durability groups based on the following criteria:

(a) The vehicles covered by a certification application shall be divided into groups of vehicles which are expected to have similar emission deterioration and emission component durability characteristics throughout their useful life. Manufacturers shall use good engineering judgment in dividing their vehicles into durability groups. Such groups of vehicles are defined as durability groups.

(b) To be included in the same durability group, vehicles must be identical in all the respects listed in paragraphs (b) (1) through (7) of this section:

(1) Combustion cycle (e.g., two stroke, four stroke, Otto cycle, diesel cycle).

(2) Engine type (e.g., piston, rotary, turbine, air cooled versus water cooled).

(3) Fuel used (e.g., gasoline, diesel, methanol, ethanol, CNG, LPG, flexible fuels).

(4) Basic fuel metering system (e.g., throttle body injection, port injection (including central port injection), carburetor, CNG mixer unit).

(5) Catalyst construction (for example, beads or monolith).

(6) Precious metal composition of the catalyst by the type of principal active material(s) used (e.g., platinum based oxidation catalyst, palladium based oxidation catalyst, platinum and rhodium three-way catalyst, palladium and rhodium three way catalyst, platinum and palladium and rhodium three way catalyst).

(7) The manufacturer must choose one of the following two criteria:

(i) Grouping statistic:

(A) Vehicles are grouped based upon the value of the grouping statistic determined using the following equation:

$$GS = [(Cat\ Vol)/(Disp)] \times Loading\ Rate$$

Where:

GS = Grouping Statistic used to evaluate the range of precious metal loading rates and relative sizing of the catalysts compared

to the engine displacement that are allowable within a durability group. The grouping statistic shall be rounded to a tenth of a gram/liter.

Cat Vol = Total volume of the catalyst(s) in liters.

Disp = Displacement of the engine in liters.

Loading rate = The mass of total precious metal(s) in the catalyst (or the total mass of all precious metal(s) of all the catalysts if the vehicle is equipped with multiple catalysts) in grams divided by the total volume of the catalyst(s) in liters.

(B) Engine-emission control system combinations which have a grouping statistic which is either less than 25 percent of the largest grouping statistic value, or less than 0.2 g/liter (whichever allows the greater coverage of the durability group) shall be grouped into the same durability group.

(ii) The manufacturer may elect to use another procedure which results in at least as many durability groups as required using criteria in paragraph (b)(7)(i) of this section providing that only vehicles with similar emission deterioration or durability are combined into a single durability group.

(c) Where vehicles are of a type which cannot be divided into durability groups based on the criteria listed above (such as non-catalyst control system approaches), the Administrator will establish durability groups for those vehicles based upon the features most related to their exhaust emission deterioration characteristics.

(d) Manufacturers may further divide groups determined under paragraph (b) of this section provided the Administrator is notified of any such changes prior to or concurrently with the submission of the application for certification (preferably at an annual preview meeting scheduled before the manufacturer begins certification activities for the model year).

(e) Manufacturers may request the Administrator's approval to combine vehicles into a single durability group which would normally not be eligible to be in a single durability group. The petition should provide:

(1) Substantial evidence that all the vehicles in the larger grouping will have the same degree of emission deterioration;

(2) Evidence of equivalent component durability over the vehicle's useful life; and

(3) Evidence that the groups will result in sufficient In-Use Verification Program data, appropriate tracking in use, and clear liability for the Agency's recall program.

[64 FR 23925, May 4, 1999, as amended at 81 FR 73991, Oct. 25, 2016]

§ 86.1821–01 Evaporative/refueling family determination.

(a) The gasoline-, ethanol-, methanol-, liquefied petroleum gas-, and natural gas-fueled vehicles described in a certification application will be divided into groupings expected to have similar evaporative and/or refueling emission characteristics (as applicable) throughout their useful life. Each group of vehicles with similar evaporative and/or refueling emission characteristics shall be defined as a separate evaporative/refueling family. Manufacturers shall use good engineering judgment to determine evaporative/refueling families.

(b) For vehicles that operate on volatile liquid fuels to be classed in the same evaporative/refueling family, they must be similar with respect to all the following items:

(1) Type of vapor storage device (e.g., canister, air cleaner, crankcase).

(2) Basic canister design.

(i) Working capacity—grams adsorption within a 10 g. range.

(ii) System configuration—number of canisters and method of connection (i.e., series, parallel).

(iii) Canister geometry, construction and materials.

(3) Fuel system.

(4) Type of refueling emission control system—non-integrated or integrated with the evaporative control system. Further, if the system is non-integrated, whether or not any other evaporative emissions, e.g. diurnal or hot soak emissions, are captured in the same storage device as the refueling emissions.

(5) Fillpipe seal mechanism—mechanical, liquid trap, other.

(6) Vapor control system or method of controlling vapor flow through the vapor line to the canister (for example, type of valve, vapor control strategy).

(7) Purge control system (for example, type of valve, purge control strategy).

(8) Vapor hose material.

(9) Fuel tank material.

(10) Evaporative emission standard or family emission limit (FEL).

(c) Where vehicles are of a type which cannot be divided into evaporative/refueling families based on the criteria listed above (such as non-canister control system approaches), the Administrator will establish families for those vehicles based upon the features most related to their evaporative and/or refueling emission characteristics.

(d) Manufacturers may further divide families determined under paragraph (b) of this section provided the Administrator is notified of any such changes prior to or concurrently with the submission of the application for certification (preferably at an annual preview meeting scheduled before the manufacturer begins certification activities for the model year).

(e) Manufacturers may petition the Administrator to combine vehicles into a single evaporative/refueling family which would normally not be eligible to be in a single evaporative/refueling family. The petition should provide:

(1) Substantial evidence that all the vehicles in the larger grouping will have the same degree of evaporative emission deterioration;

(2) Evidence of equivalent component durability over the vehicle's useful life; and

(3) Evidence that the groups will result in sufficient In-Use Verification Program data, appropriate tracking in use, and clear liability for the Agency's recall program.

(f) For vehicles to be classed in the same leak family, they must be similar with respect to the items listed in paragraph (b) of this section and use the same OBD method for detecting leaks.

[64 FR 23925, May 4, 1999, as amended at 79 FR 23725, Apr. 28, 2014

§ 86.1822–01 Durability data vehicle selection.

(a) Within each durability group, the vehicle configuration which is expected to generate the highest level of exhaust emission deterioration on candidate vehicles in use, considering all constituents, shall be selected as the durability data vehicle configuration. The manufacturer will use good engineering judgment in making this selection.

(b) The manufacturer may select, using good engineering judgment, an equivalent or worst-case configuration in lieu of testing the vehicle selected in paragraph (a) of this section. Carryover data satisfying the provisions of § 86.1839–01 may also be used in lieu of testing the configuration selected in paragraph (a) of this section.

§ 86.1823–01 Durability demonstration procedures for exhaust emissions.

This section applies to light-duty vehicles, light-duty trucks, complete heavy-duty vehicles, and heavy-duty vehicles certified under the provisions of § 86.1801–01(c). Eligible small volume manufacturers or small volume test groups may optionally meet the requirements of §§ 86.1838–01 and 86.1826–01 in lieu of the requirements of this section. For model years 2001, 2002, and 2003 all manufacturers may elect to meet the provisions of paragraph (c)(2) of this section in lieu of these requirements for light-duty vehicles or light-duty trucks.

(a) The manufacturer shall propose a durability program consisting of the elements discussed in paragraphs (a)(1) through (a)(3) of this section for advance approval by the Administrator. The durability process shall be designed to effectively predict the expected deterioration of candidate in-use vehicles over their full and intermediate useful life and shall be consistent with good engineering judgment. The Administrator will approve the program if he/she determines that it is reasonably expected to meet these design requirements.

(1) *Service accumulation method.* (i) Each durability program shall include a service accumulation method designed to effectively predict the deterioration of emissions in actual use over the full and intermediate useful life of candidate in-use vehicles.

(ii) Manufacturers may propose service accumulation methods based upon whole-vehicle full-mileage accumulation, whole vehicle accelerated mileage

accumulation (e.g., where 40,000 miles on a severe mileage accumulation cycle is equivalent to 100,000 miles of normal in-use driving), bench aging of individual components or systems, or other approaches approved by the Administrator.

(A) For whole vehicle mileage accumulation programs, all emission control components and systems (including both hardware and software) must be installed and operating for the entire mileage accumulation period.

(B) Bench procedures shall simulate the aging of components or systems over the applicable useful life and shall simulate driving patterns and vehicle operational environments found in actual use. For this purpose, manufacturers may remove the emission-related components (and other components), in whole or in part, from the durability vehicle itself and deteriorate them independently. Vehicle testing for the purpose of determining deterioration factors may include the testing of durability vehicles that incorporate such bench-aged components.

(2) *Vehicle/component selection method.* The manufacturer shall propose a vehicle/component selection method for advance approval by the Administrator. The procedure for selecting durability data vehicles and components shall meet the requirements of § 86.1822–01.

(3) *Use of deterioration program to determine compliance with the standard.* The manufacturer shall propose procedures for the determination of compliance with the standards for advance approval by the Administrator. The calculation of deterioration factors and/or the determination of vehicle compliance shall be according to the procedures approved in advance by the Administrator. The Administrator will allow two methods for using the results of the deterioration program to determine compliance with the standards. Either a deterioration factor (DF) is calculated and applied to the emission data vehicle (EDV) emission results or aged components are installed on the EDV prior to emission testing. Other methods may be approved by the Administrator if they result in an effective prediction of intermediate and full useful life emission levels on candidate in-use vehicles.

(i) *Use of deterioration factors.* (A) Deterioration factors are calculated using all FTP emission test data generated during the durability testing program except as noted:

(*1*) Multiple tests at a given mileage point are averaged together unless the same number of tests are conducted at each mileage point.

(*2*) Before and after maintenance test results are averaged together.

(*3*) Zero-mile test results are excluded from the calculation.

(*4*) When calculating intermediate and full useful life deterioration factors all data points should be included in the calculations, except that total hydrocarbon (THC) test points beyond the 50,000-mile (useful life) test point shall not be included in the calculations.

(*5*) A procedure may be employed to identify and remove from the DF calculation those test results determined to be statistical outliers providing that the outlier procedure is consistently applied to all vehicles and data points and is approved in advance by the Administrator.

(B) The deterioration factor shall be based on a linear regression, or an other regression technique approved in advance by the Administrator. The deterioration may be a multiplicative or additive factor. Separate factors will be calculated for each regulated emission constituent and for the full and intermediate useful life periods as applicable. Separate DF's are calculated for each durability group except as provided in paragraph (c) of this section.

(*1*) A multiplicative DF will be calculated by taking the ratio of the full or intermediate useful life mileage level, as appropriate (rounded to four decimal places), divided by the stabilized mileage (reference § 86.1831–01(c), e.g., 4000-mile) level (rounded to four decimal places) from the regression analysis; the result shall be rounded to three-decimal places of accuracy. The rounding required in this paragraph shall be conducted in accordance with the Rounding-Off Method specified in ASTM E29–93a, Standard Practice for Using Significant Digits in Test Data to Determine Conformance with Specifications (incorporated by

reference, see § 86.1). Calculated DF values of less than one shall be changed to one for the purposes of this paragraph.

(*2*) An additive DF will be calculated to be the difference between the full or intermediate useful life mileage level (as appropriate) minus the stabilized mileage (reference § 86.1831–01(c), e.g. 4000-mile) level from the regression analysis. The full useful life regressed emission value, the stabilized mileage regressed emission value, and the DF result shall be rounded to the same precision and using the same procedures as the raw emission results according to the provisions of § 86.1837–01. Calculated DF values of less than zero shall be changed to zero for the purposes of this paragraph.

(C) The DF calculated by these procedures will be used for determining compliance with FTP exhaust emission standards, SFTP exhaust emission standards, cold temperature NMHC emission standards, and cold temperature CO emission standards. At the manufacturer's option and using procedures approved by the Administrator, a separate DF may be calculated exclusively using cold temperature CO test data to determine compliance with cold temperature CO emission standards. Similarly, at the manufacturer's option and using procedures approved by the Administrator, a separate DF may be calculated exclusively using cold temperature NMHC test data to determine compliance with cold temperature NMHC emission standards. For determining compliance with full useful life cold temperature NMHC emission standards, the 68–86 °F 120,000 mile full useful life NMOG DF may be used. Also at the manufacturer's option and using procedures approved by the Administrator, a separate DF may be calculated exclusively using US06 and/or air conditioning (SC03) test data to determine compliance with the SFTP emission standards.

(ii) *Installation of aged components on emission data vehicles.* For full and intermediate useful life compliance determination, the manufacturer may elect to install aged components on an EDV rather than applying a deterioration factor. Different sets of components may be aged for full and intermediate useful life periods. The list of components to be installed, the techniques used to select physical parts to be aged, and the aging techniques employed to age the components must be approved in advance by the Administrator.

(b) In addition to the provisions of paragraph (a) of this section, manufacturers shall submit the following information when applying for the Administrator's approval of a durability program:

(1) Analysis and/or data demonstrating the adequacy of the manufacturer's durability processes to effectively predict emission compliance for candidate in-use vehicles. All regulated emission constituents and all test procedures shall be considered in this analysis. This data and discussion shall cover the breadth of the manufacturer's product line that will be covered by this durability procedure.

(2) Discussion of the manufacturer's in-use verification procedures including testing performed, vehicle procurement procedures used, and vehicles rejection criteria used. Any questionnaires used or inspections performed should also be documented in the manufacturer's submission. The in-use verification program shall meet the requirements of §§ 86.1845–01, 86.1846–01 and 86.1847–01.

(c) *Carryover and carryacross.* (1) Manufacturers may carry over or carry across mileage accumulation data, aged hardware, or deterioration factors according to the provisions of § 86.1839–01 using good engineering judgment.

(2) For the 2001, 2002, and 2003 model years, for light-duty vehicles and light-duty trucks the manufacturer may carry over exhaust emission DF's previously generated under the Standard AMA Durability Program described in § 86.094–13(c), the Alternate Service Accumulation Durability Program described in § 86.094–13(e) or the Standard Self-Approval Durability Program for light-duty trucks described in § 86.094–13(f) in lieu of complying with the durability provisions of paragraph (a)(1) of this section.

(i) This provision is limited to the use of existing data used for a 2000 model year or earlier certification. All new exhaust durability data must be

generated according to the provisions of paragraph (a)(1) of this section.

(ii) The manufacturer shall exercise good engineering judgment when determining the eligibility to use carryover exhaust emission DF's and the selection of the vehicle used as the source of carryover.

(iii) Starting with the 2004 model year, manufacturers must meet the provisions of paragraphs (a) and (b) of this section.

(d) *Data reporting requirements.* Data reporting requirements are contained in § 86.1844–01.

(e) *Emission component durability.* The manufacturer shall use good engineering judgment to determine that all emission-related components are designed to operate properly for the full useful life of the vehicles in actual use.

(f) *In-use verification.* The durability program must meet the requirements of § 86.1845–01.

(g) The manufacturer shall apply the approved durability process to a durability group, including durability groups in future model years, if the durability process will effectively predict (or alternatively, overstate) the deterioration of emissions in actual use over the full and intermediate useful life of candidate in-use vehicles. The manufacturer shall use good engineering judgment in determining the applicability of the durability program to a durability group.

(1) The manufacturer may make modifications to an approved durability process using good engineering judgment for the purpose of ensuring that the modified process will effectively predict, (or alternatively, overstate) the deterioration of emissions in actual use over the full and intermediate useful life of candidate in-use vehicles.

(2) The manufacturer shall notify the Administrator of its determination to use an approved (or modified) durability program on particular test groups and durability groups prior to emission data vehicle testing for the affected test groups (preferably at an annual preview meeting scheduled before the manufacturer begins certification activities for the model year).

(3) Prior to certification, the Administrator may reject the manufacturer's determination in paragraph (g) of this section if it is not made using good engineering judgment or it fails to properly consider data collected under the provisions of §§ 86.1845–01, 86.1846–01, and 86.1847–01 or other information if the Administrator determines that the durability process has not been shown to effectively predict emission levels or compliance with the standards in use on candidate vehicles for particular test groups which the manufacturers plan to cover with the durability process.

(h) The Administrator may withdraw approval to use a durability process or require modifications to a durability process based on the data collected under §§ 86.1845–01, 86.1846–01, and 86.1847–01 or other information if the Administrator determines that the durability processes have not been shown to accurately predict emission levels or compliance with the standards (or FEL, as applicable) in use on candidate vehicles (provided the inaccuracy could result in a lack of compliance with the standards for a test group covered by this durability process). Such withdrawals shall apply to future applications for certification and to the portion of the manufacturer's product line (or the entire product line) that the Administrator determines to be affected. Prior to such a withdrawal the Administrator shall give the manufacturer a preliminary notice at least 60 days prior to the final decision. During this period, the manufacturer may submit technical discussion, statistical analyses, additional data, or other information which is relevant to the decision. The Administrator will consider all information submitted by the deadline before reaching a final decision.

(i) Any manufacturer may request a hearing on the Administrator's withdrawal of approval in paragraph (h) of this section. The request shall be in writing and shall include a statement specifying the manufacturer's objections to the Administrator's determinations, and data in support of such objection. If, after review of the request and supporting data, the Administrator finds that the request raises a substantial factual issue, she/he shall provide the manufacturer a hearing in

accordance with § 86.1853–01 with respect to such issue.

[64 FR 23925, May 4, 1999, as amended at 65 FR 59974, Oct. 6, 2000; 72 FR 8566, Feb. 26, 2007]

§ 86.1823–08 Durability demonstration procedures for exhaust emissions.

This section describes durability demonstration procedures for exhaust emissions. Eligible small-volume manufacturers or small-volume test groups may optionally meet the requirements of §§ 86.1826 and 86.1838 instead of the requirements of paragraphs (a) through (m) of this section. A separate durability demonstration is required for each durability group.

(a) *Durability program objective.* The durability program must predict an expected in-use emission deterioration rate and emission level that effectively represents a significant majority of the distribution of emission levels and deterioration in actual use over the full and intermediate useful life of candidate in-use vehicles of each vehicle design which uses the durability program.

(b) *Required durability demonstration.* Manufacturers must conduct a durability demonstration for each durability group using a procedure specified in either paragraph (c), (d), or (e) of this section.

(c) *Standard whole-vehicle durability procedure.* This procedure consists of conducting mileage accumulation and periodic testing on the durability data vehicle, selected under the provisions of § 86.1822 described as follows:

(1) Mileage accumulation must be conducted using the standard road cycle (SRC). The SRC is described in appendix V of this part.

(i) Mileage accumulation on the SRC may be conducted on a track or on a chassis mileage accumulation dynamometer. Alternatively, the entire engine and emission control system may be aged on an engine dynamometer using methods that will replicate the aging that occurs on the road for that vehicle following the SRC.

(ii) The fuel used for mileage accumulation must comply with the mileage accumulation fuel provisions of § 86.113 for the applicable fuel type (e.g., gasoline or diesel fuel).

(iii) The DDV must be ballasted to a minimum of the loaded vehicle weight for light-duty vehicles and light light-duty trucks and a minimum of the ALVW for all other vehicles.

(iv) The mileage accumulation dynamometer must be setup as follows:

(A) The simulated test weight will be the equivalent test weight specified in § 86.129 using a weight basis of the loaded vehicle weight for light-duty vehicles and ALVW for all other vehicles.

(B) The road force simulation will be determined according to the provisions of § 86.129.

(C) The manufacturer will control the vehicle, engine, and/or dynamometer as appropriate to follow the SRC using good engineering judgement.

(2) Mileage accumulation must be conducted for at least 75% of the applicable full useful life mileage period specified in § 86.1805. If the mileage accumulation is less than 100% of the full useful life mileage, then the DF calculated according to the procedures of paragraph (f)(1)(ii) of this section must be based upon a line projected to the full-useful life mileage using the upper 80 percent statistical confidence limit calculated from the emission data.

(3) If a manufacturer elects to calculate a DF pursuant to paragraph (f)(1) of this section, then it must conduct at least one FTP emission test at each of five different mileage points selected using good engineering judgement. Additional testing may be conducted by the manufacturer using good engineering judgement. The required testing must include testing at 5,000 miles and at the highest mileage point run during mileage accumulation (e.g. the full useful life mileage). Different testing plans may be used providing that the manufacturer determines, using good engineering judgement, that the alternative plan would result in an equivalent or superior level of confidence in the accuracy of the DF calculation compared to the testing plan specified in this paragraph.

(d) *Standard bench-aging durability procedure.* This procedure is not applicable to diesel fueled vehicles or vehicles which do not use a catalyst as the principle after-treatment emission control device. This procedure requires installation of the catalyst-plus-oxygen-

sensor system on a catalyst aging bench. Aging on the bench is conducted by following the standard bench cycle (SBC) for the period of time calculated from the bench aging time (BAT) equation. The BAT equation requires, as input, catalyst time-at-temperature data measured on the SRC.

(1) *Standard bench cycle (SBC)*. Standard catalyst bench aging is conducted following the SBC

(i) The SBC must be run for the period of time calculated from the BAT equation.

(ii) The SBC is described in appendix VII to part 86.

(2) *Catalyst time-at-temperature data* (i) Catalyst temperature must be measured during at least two full cycles of the SRC.

(ii) Catalyst temperature must be measured at the highest temperature location in the hottest catalyst on the DDV. Alternatively, the temperature may be measured at another location providing that it is adjusted to represent the temperature measured at the hottest location using good engineering judgement.

(iii) Catalyst temperature must be measured at a minimum rate of one hertz (one measurement per second).

(iv) The measured catalyst temperature results must be tabulated into a histogram with temperature bins of no larger than 25 °C.

(3) *Bench-aging time*. Bench aging time is calculated using the bench aging time (BAT) equation as follows:

t_e for a temperature bin = $t_h e^{((R/Tr) - (R/Tv))}$

Total t_e = Sum of t_e over all the temperature bins

Bench-Aging Time = A (Total t_e)

Where:

A = 1.1 This value adjusts the catalyst aging time to account for deterioration from sources other than thermal aging of the catalyst.

R = Catalyst thermal reactivity coefficient. You may use a default value of 17,500 for the SBC.

t_h = The time (in hours) measured within the prescribed temperature bin of the vehicle's catalyst temperature histogram adjusted to a full useful life basis e.g., if the histogram represented 400 miles, and full useful life was 100,000 miles; all histogram time entries would be multiplied by 250 (100000/400).

Total t_e = The equivalent time (in hours) to age the catalyst at the temperature of T_r on the catalyst aging bench using the catalyst aging cycle to produce the same amount of deterioration experienced by the catalyst due to thermal deactivation over the vehicle's full useful life.

t_e for a bin = The equivalent time (in hours) to age the catalyst at the temperature of T_r on the catalyst aging bench using the catalyst aging cycle to produce the same amount of deterioration experienced by the catalyst due to thermal deactivation at the temperature bin of T_v over the vehicle's full useful life.

T_r = The effective reference temperature (in °K) of the catalyst on the catalyst bench run on the bench aging cycle. The effective temperature is the constant temperature that would result in the same amount of aging as the various temperatures experienced during the bench aging cycle.

T_v = The mid-point temperature (in °K) of the temperature bin of the vehicle on-road catalyst temperature histogram.

(4) *Effective reference temperature on the SBC*. The effective reference temperature of the standard bench cycle (SBC) is determined for the actual catalyst system design and actual aging bench which will be used using the following procedures:

(i) Measure time-at-temperature data in the catalyst system on the catalyst aging bench following the SBC.

(A) Catalyst temperature must be measured at the highest temperature location of the hottest catalyst in the system. Alternatively, the temperature may be measured at another location providing that it is adjusted to represent the temperature measured at the hottest location using good engineering judgement.

(B) Catalyst temperature must be measured at a minimum rate of one hertz (one measurement per second) during at least 20 minutes of bench aging.

(C) The measured catalyst temperature results must be tabulated into a histogram with temperature bins of no larger than 10 °C.

(ii) The BAT equation must be used to calculate the effective reference temperature by iterative changes to the reference temperature (T_r) until the calculated aging time equals the actual time represented in the catalyst temperature histogram. The resulting temperature is the effective reference temperature on the SBC for that catalyst system and aging bench.

(5) *Catalyst Aging Bench.* The manufacturer must design, using good engineering judgement, a catalyst aging bench that follows the SBC and delivers the appropriate exhaust flow, exhaust constituents, and exhaust temperature to the face of the catalyst.

(i) A manufacturer may use the criteria and equipment discussed in appendix VIII to part 86 to develop its catalyst aging bench without prior Agency approval. The manufacturer may use another design that results in equivalent or superior results with advance Agency approval.

(ii) All bench aging equipment and procedures must record appropriate information (such as measured A/F ratios and time-at-temperature in the catalyst) to assure that sufficient aging has actually occurred.

(6) *Required Testing.* If a manufacturer is electing to calculate a DF (as discussed in paragraph (f)(1) of this section), then it must conduct at least two FTP emissions tests on the DDV before bench aging of emission control hardware and at least two FTP emission tests on the DDV after the bench-aged emission hardware is re-installed. Additional testing may be conducted by the manufacturer using good engineering judgement.

(e) *Additional durability procedures*—(1) *Whole vehicle durability procedures.* A manufacturer may use either a customized SRC or an alternative road cycle for the required durability demonstration, with prior EPA approval.

(i) *Customized SRC.* A customized SRC is the SRC run for a different number of miles and/or using a different mileage accumulation fuel with higher levels of certain compounds that may lead to catalyst poisoning, such as phosphorus, sulfur and lead, than specified in paragraph (c)(1)(ii) of this section.

(ii) *Alternative road cycle.* An alternative cycle is a whole vehicle mileage accumulation cycle that uses a different speed-versus-time trace than the SRC, conducted for either the full useful life mileage or for less than full useful life mileage. An alternative road cycle may also include the use of fuel with higher levels of certain compounds that may lead to catalyst poisoning, such as phosphorus, sulfur and lead, than specified in paragraph (c)(1)(ii) of this section.

(iii) *Approval criteria.* The manufacturer must obtain approval from EPA prior to using a customized/alternative road cycle. EPA may approve a customized/alternative cycle when the manufacturer demonstrates that the cycle is expected to achieve the durability program objective of paragraph (a) of this section for the breadth of vehicles using the customized/alternative cycle. To obtain approval the manufacturer must submit all the following information and perform all the following analyses:

(A) The manufacturer must supply in-use FTP emission data on past model year vehicles which are applicable to the vehicle designs it intends to cover with the customized/alternative cycle.

(*1*) The amount of in-use emission data required to demonstrate the effectiveness of a customized/alternative cycle in meeting the durability objective is based on whether the customized/alternative cycle is more or less severe than the SRC. In most cases, EPA will accept a minimum of 20 candidate in-use vehicles tested as-received on the FTP cycle. If the customized/alternative cycle is significantly more severe than the SRC, EPA may accept less data. Conversely, if the customized/alternative cycle is significantly less severe than the SRC, EPA may require more data, up to a maximum of 30 vehicles.

(*2*) This data set must consist of randomly procured vehicles from actual customer use. The vehicles selected for procurement must cover the breadth of the vehicles that the manufacturer intends to certify using the customized/alternative cycle. Vehicles should be

procured and FTP tested in as-received condition under the guidelines of the high mileage IUVP program (ref: 40 CFR 86.1845–04).

(*3*) Manufacturers may use previously generated in-use data from the CAP 2000 IUVP or the RDP ''reality check'' in-use program as well as other sources of in-use emissions data for approval under this section.

(*4*) Manufacturers must remove unrepresentative data from the data set using good engineering judgement. The manufacturer must provide EPA with the data removed from the analysis and a justification for the removal of that data.

(*5*) Manufacturers may supply additional in-use data.

(B) The manufacturer must submit an analysis which includes a comparison of the relative stringency of the customized/alternative cycle to the SRC and a calculated equivalency factor for the cycle.

(*1*) The equivalency factor may be determined by an evaluation of the SRC and the customized/alternative cycle using catalyst time-at-temperature data from both cycles with the BAT equation to calculate the required bench aging time of each cycle. Once the bench aging time is calculated for each cycle, the equivalency factor is the ratio described by dividing the bench aging time on the customized/alternative cycle by the bench aging time on the SRC.

(*2*) If emissions data is available from the SRC, as well as time-at-temperature data, then that emissions information may be included in the evaluation of the relative stringency of the two cycles and the development of the equivalency factor.

(*3*) A separate equivalency factor may be determined for each test group, or test groups may be combined together (using good engineering judgement) to calculate a single equivalency factor.

(C) The manufacturer must submit an analysis which evaluates whether the durability objective will be achieved for the vehicle designs which will be certified using the customized/alternative cycle. The analysis must address of the following elements:

(*1*) How the durability objective has been achieved using the data submitted in paragraph (e)(1)(iii)(A) of this section.

(*2*) How the durability objective will be achieved for the vehicle designs which will be covered by the customized/alternative cycle. This analysis should consider the emissions deterioration impact of the design differences between the vehicles included in the data set required in (e)(1)(iii)(A) of this section and the vehicle designs that the manufacturer intends to certify using the customized/alternative cycle.

(2) *Bench-aging durability procedures.* A manufacturer may use a customized or alternative bench aging durability procedure for a required durability demonstration, if approved as described in paragraphs (e)(2)(i) through (vii) of this section. A customized/alternative bench aging procedure must use vehicle performance data (such as catalyst temperature) measured on an approved road cycle as part of the algorithm to calculate bench aging time. The manufacturer must obtain approval from the Agency prior to using a customized bench durability procedure.

(i) The lower control temperature on the SBC may be modified without prior EPA approval provided that the high control temperature is set 90 °C above the lower control temperature and an approved BAT equation is used to calculate bench aging time.

(ii) The R-factor used in EPA's BAT equation may be determined experimentally using EPA's standard procedures (specified in appendix IX of this part) without prior EPA approval. Other experimental techniques to calculate the R-factor require advance EPA approval. To obtain approval, the manufacturer must demonstrate that the calculated bench aging time results in the same (or larger) amount of emission deterioration as the associated road cycle.

(iii) The A-factor used in EPA's BAT equation may be modified, using good engineering judgement without prior EPA approval, to ensure that the modified durability process will achieve the durability objective of paragraph (a) of this section.

(iv) Bench aging may be conducted using fuel with additional compounds that may lead to catalyst poisoning, such as phosphorus, sulfur or lead, without prior EPA approval. A manufacturer using fuel with these additional compounds may either calculate a new R-factor or A-factor to assure that the durability objective of paragraph (a) of this section is properly achieved regardless of the use of worst-case fuel, in which case the approval criteria for those changes would apply.

(v) An approved customized/alternative road cycle may be used to develop catalyst temperature histograms for use in the BAT equation without additional EPA approval beyond the original approval necessary to use that cycle for mileage accumulation.

(vi) A different bench cycle than the SBC may be used during bench aging with prior EPA approval. To obtain approval the manufacturer must demonstrate that bench aging for the appropriate time on the new bench cycle provides the same or larger amount of emission deterioration as the associated road cycle.

(vii) A different method to calculate bench aging time may be used with prior EPA approval. To obtain approval the manufacturer must demonstrate that bench aging for the time calculated by the alternative method results in the same or larger amount of emission deterioration as the associated road cycle.

(f) *Use of deterioration program to determine compliance with the standard.* A manufacturer may select from two methods for using the results of the deterioration program to determine compliance with the applicable emission standards. Either a deterioration factor (DF) is calculated and applied to the emission data vehicle (EDV) emission results or aged components are installed on the EDV prior to emission testing.

(1) *Deterioration factors.* (i) Deterioration factors are calculated using all FTP emission test data generated during the durability testing program except as noted:

(A) Multiple tests at a given mileage point are averaged together unless the same number of tests are conducted at each mileage point.

(B) Before and after maintenance test results are averaged together.

(C) Zero-mile test results are excluded from the calculation.

(D) Total hydrocarbon (THC) test points beyond the 50,000-mile (useful life) test point are excluded from the intermediate useful life deterioration factor calculation.

(E) A procedure may be employed to identify and remove from the DF calculation those test results determined to be statistical outliers providing that the outlier procedure is consistently applied to all vehicles and data points and is approved in advance by the Administrator.

(ii) The deterioration factor must be based on a linear regression, or another regression technique approved in advance by the Administrator. The deterioration must be a multiplicative or additive factor. Separate factors will be calculated for each regulated emission constituent and for the full and intermediate useful life periods as applicable. Separate DF's are calculated for each durability group except as provided in § 86.1839.

(A) A multiplicative DF will be calculated by taking the ratio of the full or intermediate useful life mileage level, as appropriate (rounded to four decimal places), divided by the stabilized mileage (reference § 86.1831–01(c), e.g., 4000-mile) level (rounded to four decimal places) from the regression analysis. The result must be rounded to three-decimal places of accuracy. The rounding required in this paragraph must be conducted in accordance with § 86.1837. Calculated DF values of less than one must be changed to one for the purposes of this paragraph.

(B) An additive DF will be calculated to be the difference between the full or intermediate useful life mileage level (as appropriate) minus the stabilized mileage (reference § 86.1831–01(c), e.g. 4000-mile) level from the regression analysis. The full useful life regressed emission value, the stabilized mileage regressed emission value, and the DF result must be rounded to the same precision and using the same procedures as the raw emission results according to the provisions of § 86.1837–01. Calculated DF values of less than zero

must be changed to zero for the purposes of this paragraph.

(iii) The DF calculated by these procedures will be used for determining full and intermediate useful life compliance with FTP exhaust emission standards, SFTP exhaust emission standards, and cold CO emission standards. At the manufacturer's option and using procedures approved by the Administrator, a separate DF may be calculated exclusively using cold CO test data to determine compliance with cold CO emission standards. Also at the manufacturer's option and using procedures approved by the Administrator, a separate DF may be calculated exclusively using US06 and/or air conditioning (SC03) test data to determine compliance with the SFTP emission standards.

(2) *Installation of aged components on emission data vehicles.* For full and intermediate useful life compliance determination, the manufacturer may elect to install aged components on an EDV prior to emission testing rather than applying a deterioration factor. Different sets of components may be aged for full and intermediate useful life periods. Components must be aged using an approved durability procedure that complies with paragraph (b) of this section. The list of components to be aged and subsequently installed on the EDV must selected using good engineering judgement.

(g) [Reserved]

(h) *Application of the durability procedure to future durability groups.* The manufacturer may apply a durability procedure approved under paragraphs (c), (d) or (e) of this section to a durability group, including durability groups in future model years, if the durability process will achieve the objective of paragraph (a) of this section for that durability group. The manufacturer must use good engineering judgment in determining the applicability of an approved durability procedure to a durability group.

(1) *Modifications to a durability procedure.* (i) Standard durability procedures. The manufacturer may modify a standard durability procedure (allowed in paragraphs (c) or (d) of this section) by increasing or decreasing the number of miles run on the SRC to represent full or intermediate useful life emissions deterioration or by changing the A-Factor in the BAT equation for a bench aging, using good engineering judgment, to ensure that the modified procedure will achieve the objective of paragraph (a) of this section for that durability group.

(ii) *Customized/Alternative durability procedures.* The manufacturer may modify an alternative/customized durability procedure approved under the provisions of paragraph (e) of this section, using good engineering judgment, for the purposes of ensuring that the modified procedure will achieve the objective of paragraph (a) of this section for that durability group.

(2) The manufacturer must notify the Administrator of its determination to use an approved (or modified) durability procedure on particular test groups and durability groups prior to, or concurrently with, its submission of the Application for Certification for the affected test groups (notification at an annual preview meeting scheduled before the manufacturer begins certification activities for the model year is preferred).

(3) Prior to certification, the Administrator may reject the manufacturer's determination in paragraph (h) of this section to apply an approved or modified durability procedure for a durability group or test group if:

(i) It is not made using good engineering judgment,

(ii) It fails to properly consider data collected under the provisions of §§ 86.1845–04, 86.1846–01, and 86.1847–01 or other information, or

(iii) The Administrator determines that the durability procedure has not been shown to achieve the objective of paragraph (a) of this section for particular test groups which the manufacturer plans to cover with the durability procedure.

(i) *Evaluation of the certification durability procedures based on in-use emissions data.* (1) Manufacturers must use the information gathered from the IUVP, as well as other sources of in-use emissions data, to periodically review whether the durability procedure it employs achieves the objective specified in paragraph (a) of this section.

(2) *Required analysis of a manufacturer's approved durability procedures.* (i) In addition to any periodic reviews under paragraph (i)(1) of this section, a manufacturer must conduct a review of whether the durability procedure it employs achieves the durability objective specified in paragraph (a) of this section when the criteria for additional testing specified in § 86.1846 (b) are activated.

(ii) These criteria are evaluated independently for all applicable FTP emission constituents.

(iii) This analysis must be performed for each test group certified by the manufacturer.

(iv) These procedures apply to the EPA standard durability procedures discussed in paragraphs (c) and (d) of this section as well as durability procedures approved under paragraph (e) of this section, including modifications under paragraph (h) of this section.

(v) The analysis must be submitted to EPA no later than 60 days after the submission of the IUVP data report specified in § 86.1847(f).

(3) EPA may require a manufacturer to perform an analysis as described in paragraph (i)(2) of this section if EPA is concerned that the manufacturer's durability procedure may not achieve the durability objective of paragraph (a) of this section.

(j) If, based on the analysis required in paragraph (i) of this section and/or any other information, EPA determines that the durability procedure does not achieve the durability objective of paragraph (a) of this section, EPA may withdraw approval to use the durability procedure or condition approval on modifications to the durability procedure. Such withdrawal or conditional approval will apply to future applications for certification and to the portion of the manufacturer's product line (or the entire product line) that the Administrator determines to be affected. Prior to such a withdrawal the Administrator will give the manufacturer a preliminary notice at least 60 days prior to the final decision. During this period, the manufacturer may submit technical discussion, statistical analyses, additional data, or other information which is relevant to the decision. The Administrator will consider all information submitted by the deadline before reaching a final decision.

(k) If EPA withdraws approval, under the provisions of paragraph (j) of this section, for a durability procedure approved under the provisions of paragraphs (c) and/or (d) of this section, the following procedures apply:

(1) The manufacturer must select one of the following options for future applications for certification for the applicable portion of the manufacturers product-line affect by the Agency's decision:

(i) Increase future DFs calculated using the applicable durability process by the average percent-difference between certification levels and IUVP data; or

(ii) Increase the miles driven on the SRC or the aging time calculated by the BAT equation by the average percent-difference between certification levels and IUVP data, or

(iii) The manufacturer may obtain approval for a new customized durability process, as allowed in paragraph (e) of this section, that has been demonstrated to meet the durability objective.

(2) If EPA's decision to withdraw approval under the provisions of paragraph (j) of this section is based on fewer than 20 tests, the Administrator may require a smaller adjustment than specified in paragraph (k)(1)(i) or (ii) of this section.

(l) Any manufacturer may request a hearing on the Administrator's withdrawal of approval in paragraphs (j) or (k) of this section. The request must be in writing and must include a statement specifying the manufacturer's objections to the Administrator's determinations, and data in support of such objection. If, after review of the request and supporting data, the Administrator finds that the request raises a substantial factual issue, she/he must provide the manufacturer a hearing in accordance with § 86.1853–01 with respect to such issue.

(m) *Durability demonstration procedures for vehicles subject to the greenhouse gas exhaust emission standards specified in § 86.1818.* (1) CO_2. (i) Unless otherwise specified under paragraph (m)(1)(ii) of this section, manufacturers

may use a multiplicative CO_2 deterioration factor of one or an additive deterioration factor of zero to determine full useful life emissions for the FTP and HFET tests.

(ii) Based on an analysis of industry-wide data, EPA may periodically establish and/or update the deterioration factor for CO_2 emissions, including air conditioning and other credit-related emissions. Deterioration factors established and/or updated under this paragraph (m)(1)(ii) will provide adequate lead time for manufacturers to plan for the change.

(iii) Alternatively, manufacturers may use the whole-vehicle mileage accumulation procedures in § 86.1823–08 (c) or (d)(1) to determine CO_2 deterioration factors. In this case, each FTP test performed on the durability data vehicle selected under § 86.1822 must also be accompanied by an HFET test, and combined FTP/HFET CO_2 results determined by averaging the city (FTP) and highway (HFET) CO_2 values, weighted 0.55 and 0.45 respectively. The deterioration factor will be determined for this combined CO_2 value. Calculated multiplicative deterioration factors that are less than one shall be set to equal one, and calculated additive deterioration factors that are less than zero shall be set to zero.

(iv) If, in the good engineering judgment of the manufacturer, the deterioration factors determined according to paragraphs (m)(1)(i), (m)(1)(ii), or (m)(1)(iii) of this section do not adequately account for the expected CO_2 emission deterioration over the vehicle's useful life, the manufacturer may petition EPA to request a more appropriate deterioration factor.

(2) *N_2O and CH_4.* (i) For manufacturers complying with the FTP emission standards for N_2O and CH_4 specified in § 86.1818–12(f)(1) or determined under § 86.1818–12(f)(3), FTP-based deterioration factors for N_2O and CH_4 shall be determined according to the provisions of paragraphs (a) through (l) of this section.

(ii) For manufacturers complying with the fleet averaging option for N_2O and CH_4 as allowed under § 86.1818–12(f)(2), deterioration factors based on FTP testing shall be determined and may be used to determine full useful life emissions for the FTP and HFET tests. The manufacturer may at its option determine separate deterioration factors for the FTP and HFET test cycles, in which case each FTP test performed on the durability data vehicle selected under § 86.1822 of this part must also be accompanied by an HFET test.

(iii) For the 2012 through 2016 model years only, manufacturers may use alternative deterioration factors. For N_2O, the alternative deterioration factor to be used to adjust FTP and HFET emissions is the deterioration factor determined for (or derived from, using good engineering judgment) NO_X emissions according to the provisions of this section. For CH_4, the alternative deterioration factor to be used to adjust FTP and HFET emissions is the deterioration factor determined for (or derived from, using good engineering judgment) NMOG or NMHC emissions according to the provisions of this section.

(3) *Other carbon-related exhaust emissions.* FTP-based deterioration factors shall be determined for carbon-related exhaust emissions (CREE), hydrocarbons, and CO according to the provisions of paragraphs (a) through (l) of this section. The FTP-based deterioration factor shall be used to determine full useful life emissions for both the FTP (city) and HFET (highway) test cycles. The manufacturer may at its option determine separate deterioration factors for the FTP and HFET test cycles, in which case each FTP test performed on the durability data vehicle selected under § 86.1822 must also be accompanied by an HFET test. In lieu of determining emission-specific deterioration factors for the specific hydrocarbons of CH_3OH (methanol), HCHO (formaldehyde), C_2H_5OH (ethanol), and C_2H_4O (acetaldehyde) as may be required for some alternative fuel vehicles, manufacturers may use the additive or multiplicative deterioration factor determined for (or derived from, using good engineering judgment) NMOG or NMHC emissions according to the provisions of this section.

(4) *Air Conditioning leakage and efficiency or other emission credit requirements to comply with exhaust CO_2 standards.* Manufactures will attest to the

durability of components and systems used to meet the CO_2 standards. Manufacturers may submit engineering data to provide durability demonstration. Deterioration factors do not apply to emission-related components and systems used to generate air conditioning leakage and/or efficiency credits.

(n) *Emission component durability*. [Reserved]. For guidance see 40 CFR 86.1823–01(e).

[71 FR 2830, Jan. 17, 2006, as amended at 74 FR 61548, Nov. 25, 2009; 75 FR 25688, May 7, 2010; 76 FR 39521, July 6, 2011; 76 FR 57378, Sept. 15, 2011; 77 FR 63161, Oct. 15, 2012; 79 FR 23726, Apr. 28, 2014; 81 FR 73991, Oct. 25, 2016]

§ 86.1824–01 Durability demonstration procedures for evaporative emissions.

This section applies to gasoline-, methanol-, liquefied petroleum gas-, and natural gas-fueled LDV/Ts, MDPVs, complete heavy-duty vehicles, and heavy-duty vehicles certified under the provisions of § 86.1801–01(c). The manufacturer shall determine a durability process that will predict the expected evaporative emission deterioration of candidate in-use vehicles over their full useful life. The manufacturer shall use good engineering judgment in determining this process.

(a) *Service accumulation method*. (1) The manufacturer shall develop a service accumulation method designed to effectively predict the deterioration of candidate in-use vehicles' evaporative emissions in actual use over its full useful life. The manufacturer shall use good engineering judgement in developing this method.

(2) The manufacturers may develop a service accumulation methods based upon whole-vehicle full-mileage accumulation, whole vehicle accelerated mileage accumulation (e.g., where 40,000 miles on a severe mileage accumulation cycle is equivalent to 100,000 miles of normal in-use driving), bench aging of individual components or systems, or other approaches approved by the Administrator.

(i) For whole vehicle mileage accumulation programs, all emission control components and systems (including both hardware and software) must be installed and operating for the entire mileage accumulation period.

(ii) Bench procedures shall simulate the aging of components or systems over the applicable useful life and shall simulate driving patterns and vehicle operational environments found in actual use. For this purpose, manufacturers may remove the emission-related components (and other components), in whole or in part, from the durability vehicle itself and deteriorate them independently. Vehicle testing for the purpose of determining deterioration factors may include the testing of durability vehicles that incorporate such bench-aged components.

(iii) For gasoline fueled vehicles certified to meet the evaporative emission standards set forth in § 86.1811–04(e)(1), any service accumulation method for evaporative emissions must employ gasoline fuel for the entire service accumulation period which contains ethanol in, at least, the highest concentration permissible in gasoline under federal law and that is commercially available in any state in the United States. Unless otherwise approved by the Administrator, the manufacturer must determine the appropriate ethanol concentration by selecting the highest legal concentration commercially available during the calendar year before the one in which the manufacturer begins its service accumulation. The manufacturer must also provide information acceptable to the Administrator to indicate that the service accumulation method is of sufficient design, duration and severity to stabilize the permeability of all non-metallic fuel and evaporative system components to the service accumulation fuel constituents.

(iv) For flexible-fueled, dual-fueled, multi-fueled, ethanol-fueled and methanol-fueled vehicles certified to meet the evaporative emission standards set forth in § 86.1811–04(e)(1), any service accumulation method must employ fuel for the entire service accumulation period which the vehicle is designed to use and which the Administrator determines will have the greatest impact upon the permeability of evaporative and fuel system components. The manufacturer must also provide information acceptable to the Administrator to indicate that the

service accumulation method is of sufficient design, duration and severity to stabilize the permeability of all nonmetallic fuel and evaporative system components to service accumulation fuel constituents.

(v) A manufacturer may use other methods, based upon good engineering judgment, to meet the requirements of paragraphs (a)(2) (iii) and (iv) of this section, as applicable. These methods must be approved in advance by the Administrator and meet the objectives of paragraphs (a)(2) (iii) and (iv) of this section, as applicable: to provide assurance that the permeability of all nonmetallic fuel and evaporative system components will not lead to evaporative emission standard exceedance under sustained exposure to commercially available alcohol-containing fuels for the useful life of the vehicle.

(b) *Vehicle/component selection method.* The manufacturer shall determine a vehicle and component selection procedure which results in representative test vehicles and reflects good engineering judgment.

(c) The manufacturer shall calculate a deterioration factor which is applied to the evaporative emission results of the emission data vehicles. The deterioration factor shall be based on a linear regression, or an other regression technique approved in advance by the Administrator. The DF will be calculated to be the difference between the full life mileage evaporative level minus the stabilized mileage (e.g., 4000-mile) evaporative level from the regression analysis. The DF and the full and stabilized mileage emission levels shall be rounded to two decimal places of accuracy in accordance with the Rounding-Off Method specified in ASTM E29–93a, Standard Practice for Using Significant Digits in Test Data to Determine Conformance with Specifications (incorporated by reference, see § 86.1(b)(1). Calculated DF values of less than zero shall be changed to zero for the purposes of this paragraph.

(d) *Emission component durability.* The manufacturer shall use good engineering judgment to determine that all emission-related components are designed to operate properly for the full useful life of the vehicles in actual use.

(e) *In-use verification.* The durability program must meet the requirements of § 86.1845–01.

(f) Information obtained under §§ 86.1845–01, 86.1846–01, 86.1847–01 or from other sources shall be used by the manufacturer in developing new durability processes and/or updating existing durability processes using good engineering judgment.

[64 FR 23925, May 4, 1999, as amended at 65 FR 6863, Feb. 10, 2000; 65 FR 59974, Oct. 6, 2000]

§ 86.1824–07 Durability demonstration procedures for evaporative emissions.

§ 86.1824–07 includes text that specifies requirements that differ from those specified in § 86.1824–01. Where a paragraph in § 86.1824–01 is identical and applicable to § 86.1824–07, this may be indicated by specifying the corresponding paragraph and the statement ''[Reserved]. For guidance see § 86.1824–01.''. This section applies to gasoline-, methanol-, natural gas- and liquefied petroleum gas-fueled LDV/Ts, MDPVs, and HDVs.

(a) through (f) [Reserved]. For guidance see § 86.1824–01.

[66 FR 5192, Jan. 18, 2001]

§ 86.1824–08 Durability demonstration procedures for evaporative emissions.

This section describes durability demonstration procedures for evaporative emissions. Eligible small-volume manufacturers or small-volume test groups may optionally meet the requirements of §§ 86.1826 and 86.1838 instead of the requirements of paragraphs (a) through (j) of this section. A separate durability demonstration is required for each evaporative/refueling family.

(a) *Durability program objective.* The durability program must predict an expected in-use emission deterioration rate and emission level that effectively represents a significant majority of the distribution of emission levels and deterioration in actual use over the full useful life of candidate in-use vehicles of each vehicle design which uses the durability program. This requirement applies for all SHED-based measurements except the bleed emission test.

The standard for bleed emissions applies for the full useful life, but manufacturers do not need to establish deterioration factors for bleed emissions. The requirements of this section do not apply for spitback or leak standards.

(b) *Required durability demonstration.* Manufacturers must conduct a durability demonstration which satisfies the provisions of either paragraph (c), (d), or (e) of this section.

(c) *Whole vehicle evaporative durability demonstration.* (1) Mileage accumulation must be conducted using the SRC or any road cycle approved under the provisions of § 86.1823(e)(1).

(2) Mileage accumulation must be conducted for either:

(i) The applicable full useful life mileage period specified in § 86.1805, or

(ii) At least 75 percent of the full useful life mileage. In which case, the manufacturer must calculate a df calculated according to the procedures of paragraph (f)(1)(ii) of this section, except that the DF must be based upon a line projected to the full-useful life mileage using the upper 80 percent statistical confidence limit calculated from the emission data.

(3) The manufacturer must conduct at least one evaporative emission test at each of the five different mileage points selected using good engineering judgement. The required testing must include testing at 5,000 miles and at the highest mileage point run during mileage accumulation (e.g. the full useful life mileage). Additional testing may be conducted by the manufacturer using good engineering judgement. The manufacturer may select to run either the 2-day and/or 3-day evaporative test at each test point using good engineering judgement.

(d) *Bench aging evaporative durability procedures.* Manufacturers may use bench procedures designed, using good engineering judgement, to evaluate the emission deterioration of evaporative control systems. Manufacturers may base the bench procedure on an evaluation the following potential causes of evaporative emission deterioration:

(1) Cycling of canister loading due to diurnal and refueling events,

(2) Use of various commercially available fuels, including the Tier 2 requirement to include alcohol fuel;

(3) Vibration of components;

(4) Deterioration of hoses, etc. due to environmental conditions; and

(5) Deterioration of fuel cap due to wear.

(e) *Combined whole-vehicle and bench-aging programs.* Manufacturers may combine the results of whole vehicle aging and bench aging procedures using good engineering judgement.

(f) *Fuel requirements.* (1) For gasoline fueled vehicles certified to meet the evaporative emission standards set forth in this subpart, any mileage accumulation method for evaporative emissions must employ gasoline fuel for the entire mileage accumulation period which contains ethanol in, at least, the highest concentration permissible in gasoline under federal law and that is commercially available in any state in the United States. Unless otherwise approved by the Administrator, the manufacturer must determine the appropriate ethanol concentration by selecting the highest legal concentration commercially available during the calendar year before the one in which the manufacturer begins its mileage accumulation. The manufacturer must also provide information acceptable to the Administrator to indicate that the mileage accumulation method is of sufficient design, duration and severity to stabilize the permeability of all non-metallic fuel and evaporative system components to the mileage accumulation fuel constituents.

(2) For flexible-fueled, dual-fueled, multi-fueled, ethanol-fueled and methanol-fueled vehicles certified to meet the evaporative emission standards set forth in § 86.1811–04(e)(1), any mileage accumulation method must employ fuel for the entire mileage accumulation period which the vehicle is designed to use and which the Administrator determines will have the greatest impact upon the permeability of evaporative and fuel system components. The manufacturer must also provide information acceptable to the Administrator to indicate that the mileage accumulation method is of sufficient design, duration and severity to stabilize the permeability of all non-metallic fuel and evaporative system

components to mileage accumulation fuel constituents.

(3) A manufacturer may use other methods, based upon good engineering judgment, to meet the requirements of paragraphs (f)(1) and (2) of this section, as applicable. These methods must be approved in advance by the Administrator and meet the objectives of paragraphs (f)(1) and (2) of this section, as applicable: to provide assurance that the permeability of all non-metallic fuel and evaporative system components will not lead to evaporative emission standard exceedance under sustained exposure to commercially available alcohol-containing fuels for the useful life of the vehicle.

(g) *Calculation of a deterioration factor*. The manufacturer must calculate a deterioration factor which is applied to the evaporative emission results of the emission data vehicles. The deterioration factor must be based on a linear regression, or an other regression technique approved in advance by the Administrator. The DF will be calculated to be the difference between the full life mileage evaporative level minus the stabilized mileage (e.g., 4000 – mile) evaporative level from the regression analysis. The full useful life regressed emission value, the stabilized mileage regressed emission value, and the DF result must be rounded to the same precision and using the same procedures as the raw emission results according to the provisions of § 86.1837–01. Calculated DF values of less than zero must be changed to zero for the purposes of this paragraph.

(h) [Reserved]

(i) If EPA determines based on IUVP data or other information that the durability procedure does not achieve the durability objective of paragraph (a) of this section, EPA may withdraw approval to use the durability procedure or condition approval on modifications to the durability procedure. Such withdrawal or conditional approval will apply to future applications for certification and to the portion of the manufacturer's product line (or the entire product line) that the Administrator determines to be affected. Prior to such a withdrawal the Administrator will give the manufacturer a preliminary notice at least 60 days prior to the final decision. During this period, the manufacturer may submit technical discussion, statistical analyses, additional data, or other information which is relevant to the decision. The Administrator will consider all information submitted by the deadline before reaching a final decision.

(j) Any manufacturer may request a hearing on the Administrator's withdrawal of approval in paragraph (i) of this section. The request must be in writing and must include a statement specifying the manufacturer's objections to the Administrator's determinations, and data in support of such objection. If, after review of the request and supporting data, the Administrator finds that the request raises a substantial factual issue, she/he must provide the manufacturer a hearing in accordance with § 86.1853–01 with respect to such issue.

(k) *Emission component durability*. [Reserved]. For guidance see 40 CFR 86.1824–01(d).

[71 FR 2834, Jan. 17, 2006, as amended at 79 FR 23726, Apr. 28, 2014]

§ 86.1825–01 Durability demonstration procedures for refueling emissions.

This section applies to light-duty vehicles, light-duty trucks, and complete heavy-duty vehicles, and heavy-duty vehicles which are certified under light-duty rules as allowed under the provisions of § 86.1801–01(c) which are subject to refueling loss emission compliance. Refer to the provisions of §§ 86.1811–01, 86.1811–04, 86.1812–01, 86.1813–01, and 86.1816–04 to determine applicability of the refueling standards to different classes of vehicles for various model years. Diesel fuel vehicles may qualify for an exemption to the requirements of this section under the provisions of § 86.1810. The manufacturer shall determine a durability process that will predict the expected refueling emission deterioration of candidate in-use vehicles over their full useful life. The manufacturer shall use good engineering judgment in determining this process.

(a) *Service accumulation method*. (1) The manufacturer shall develop a service accumulation method designed to effectively predict the deterioration of candidate in-use vehicles' refueling

loss emissions in actual use over its full useful life. The manufacturer shall use good engineering judgement in developing this method.

(2) The manufacturers may develop a service accumulation methods based upon whole-vehicle full-mileage accumulation, whole vehicle accelerated mileage accumulation (e.g., where 40,000 miles on a severe mileage accumulation cycle is equivalent to 100,000 miles of normal in-use driving), bench aging of individual components or systems, or other approaches approved by the Administrator.

(i) For whole vehicle mileage accumulation programs, all emission control components and systems (including both hardware and software) must be installed and operating for the entire mileage accumulation period.

(ii) Bench procedures shall simulate the aging of components or systems over the applicable useful life and shall simulate driving patterns and vehicle operational environments found in actual use. For this purpose, manufacturers may remove the emission-related components (and other components), in whole or in part, from the durability vehicle itself and deteriorate them independently. Vehicle testing for the purpose of determining deterioration factors may include the testing of durability vehicles that incorporate such bench-aged components.

(b) *Vehicle/component selection method.* The manufacturer shall determine a vehicle and component selection procedure which results in representative test vehicles and reflects good engineering judgment.

(c) The manufacturer shall calculate a deterioration factor which is applied to the refueling emission results of the emission data vehicles. The deterioration factor shall be based on a linear regression, or an other regression technique approved in advance by the Administrator. The DF will be calculated to be the difference between the full life mileage refueling loss emission level minus the stabilized mileage (e.g., 4000-mile) refueling loss emission level from the regression analysis. The DF and the full and stabilized mileage emission levels shall be rounded to two decimal places of accuracy in accordance with the Rounding-Off Method specified in ASTM E29–93a, Standard Practice for Using Significant Digits in Test Data to Determine Conformance with Specifications (incorporated by reference, see § 86.1(b)(1). Calculated DF values of less than zero shall be changed to zero for the purposes of this paragraph.

(d) The durability process described in paragraph (a) of this section must be described in the application for certification under the provisions of § 86.1844–01.

(e) *Emission component durability.* The manufacturer shall use good engineering judgment to determine that all emission-related components are designed to operate properly for the full useful life of the vehicles in actual use.

(f) *In-use verification.* The durability program must meet the requirements of § 86.1845–01.

(g) Information obtained under §§ 86.1845–01, 86.1846–01, 86.1847–01 or from other sources shall be used by the manufacturer in developing new durability processes and/or updating existing durability processes using good engineering judgment.

[64 FR 23925, May 4, 1999, as amended at 65 FR 59974, Oct. 6, 2000]

§ 86.1825–08 Durability demonstration procedures for refueling emissions.

This section applies to 2008 and later model year light-duty vehicles, light-duty trucks, and heavy-duty vehicles which are certified under light-duty rules as allowed under the provisions of § 86.1801–01(c)(1) which are subject to refueling loss emission compliance. Optionally, a manufacturer may elect to use this section for earlier model year light-duty vehicles, light-duty trucks, and heavy-duty vehicles which are certified under light-duty rules as allowed under the provisions of § 86.1801–01(c)(1) which are subject to refueling loss emission compliance. Refer to the provisions of §§ 86.1811, 86.1812, 86.1813, 86.1814, and 86.1815 to determine applicability of the refueling standards to different classes of vehicles for various model years. Diesel fuel vehicles may qualify for an exemption to the requirements of this section under the provisions of § 86.1810.

(a) *Durability program objective*. The durability program must predict an expected in-use emission deterioration rate and emission level that effectively represents a significant majority of the distribution of emission levels and deterioration in actual use over the full useful life of candidate in-use vehicles of each vehicle design which uses the durability program.

(b) *Required durability demonstration*. Manufacturers must conduct a durability demonstration which satisfies the provisions of either paragraph (c), (d), or (e) of this section.

(c) *Whole vehicle refueling durability demonstration*. The following procedures must be used when conducting a whole vehicle durability demonstration:

(1) Mileage accumulation must be conducted using the SRC or a road cycle approved under the provisions of § 86.1823(e)(1).

(2) Mileage accumulation must be conducted for either:

(i) The applicable full useful life mileage period specified in § 86.1805, or

(ii) At least 75 percent of the full useful life mileage. In which case, the manufacturer must calculate a df calculated according to the procedures of paragraph (f)(1)(ii) of this section, except that the DF must be based upon a line projected to the full-useful life mileage using the upper 80 percent statistical confidence limit calculated from the emission data.

(3) The manufacturer must conduct at least one refueling emission test at each of the five different mileage points selected using good engineering judgement. The required testing must include testing at 5,000 miles and at the highest mileage point run during mileage accumulation (e.g. the full useful life mileage). Additional testing may be conducted by the manufacturer using good engineering judgement.

(d) *Bench aging refueling durability procedures*. Manufacturers may use bench procedures designed, using good engineering judgement, to evaluate the emission deterioration of evaporative/refueling control systems. Manufacturers may base the bench procedure on an evaluation the following potential causes of evaporative/refueling emission deterioration:

(1) Cycling of canister loading due to diurnal and refueling events;

(2) Use of various commercially available fuels, including the Tier 2 requirement to include alcohol fuel;

(3) Vibration of components;

(4) Deterioration of hoses, etc. due to environmental conditions; and

(5) Deterioration of fuel cap due to wear.

(e) *Combined whole-vehicle and bench-aging programs*. Manufacturers may combine the results of whole vehicle aging and bench aging procedures using good engineering judgement.

(f) [Reserved]

(g) *Calculation of a deterioration factor*. The manufacturer must calculate a deterioration factor which is applied to the evaporative emission results of the emission data vehicles. The deterioration factor must be based on a linear regression, or an other regression technique approved in advance by the Administrator. The DF will be calculated to be the difference between the full life mileage evaporative level minus the stabilized mileage (e.g., 4000-mile) evaporative level from the regression analysis. The full useful life regressed emission value, the stabilized mileage regressed emission value, and the DF result must be rounded to the same precision and using the same procedures as the raw emission results according to the provisions of § 86.1837–01. Calculated DF values of less than zero must be changed to zero for the purposes of this paragraph.

(h) *Emission component durability*. [Reserved]. For guidance see 40 CFR 86.1845–01 (e).

(i) If EPA determines based on IUVP data or other information that the durability procedure does not achieve the durability objective of paragraph (a) of this section, EPA may withdraw approval to use the durability procedure or condition approval on modifications to the durability procedure. Such withdrawal or conditional approval will apply to future applications for certification and to the portion of the manufacturer's product line (or the entire product line) that the Administrator determines to be affected. Prior to such a withdrawal the Administrator will give the manufacturer a preliminary notice at least 60 days prior to the final

decision. During this period, the manufacturer may submit technical discussion, statistical analyses, additional data, or other information which is relevant to the decision. The Administrator will consider all information submitted by the deadline before reaching a final decision.

(j) Any manufacturer may request a hearing on the Administrator's withdrawal of approval in paragraph (i) of this section. The request must be in writing and must include a statement specifying the manufacturer's objections to the Administrator's determinations, and data in support of such objection. If, after review of the request and supporting data, the Administrator finds that the request raises a substantial factual issue, she/he must provide the manufacturer a hearing in accordance with § 86.1853–01 with respect to such issue.

[71 FR 2835, Jan. 17, 2006]

§ 86.1826–01 Assigned deterioration factors for small-volume manufacturers and small-volume test groups.

(a) *Applicability*. This program is an option available for small-volume manufacturers and small-volume test groups as described in § 86.1838.

(b) *Determination of deterioration factors*. No service accumulation method or vehicle/component selection method is required. Deterioration factors for all types of regulated emissions are assigned using the provisions in this paragraph (b). A separate assigned deterioration factor is required for each durability group. Manufacturers shall use good engineering judgment in applying deterioration factors. Manufacturers may use assigned deterioration factors that the Administrator determines and prescribes.

(1) The deterioration factors will be the Administrator's estimate, periodically updated and published in a guidance document, of the 70th percentile deterioration factors calculated using the industry-wide database of previously completed durability data vehicles or engines used for certification.

(2) The Administrator may use discretion to develop assigned deterioration factors using alternative methods if there is insufficient information to calculate an appropriate industry-wide deterioration factor (for example: a new engine technology coupled with a proven emission control system). These methods may include the use of assigned deterioration factors based on similar durability vehicles.

(3) Alternatively, with advance approval from the Administrator, a manufacturer may use deterioration factors developed by another manufacturer. The manufacturer seeking to use these deterioration factors must—

(i) Demonstrate that the engines from the two manufacturers share technical parameters to the degree that would support the conclusion that a common deterioration factor should apply for both vehicle configurations as defined in § 86.1803.

(ii) Provide supporting information, such as histograms of exhaust temperature data, comparisons of vehicle weight and road load horsepower, or comparisons of powertrains and emission control systems.

[79 FR 23726, Apr. 28, 2014]

§ 86.1827–01 Test group determination.

This section applies to the grouping of vehicles into test groups within a durability group. The vehicles covered by an application within a durability group shall be divided into test groups based on the following criteria. The manufacturer shall use good engineering judgment in grouping vehicles into test groups.

(a) To be included in the same test group, vehicles must be identical in all following respects:

(1) Durability group;

(2) Engine displacement (within a total band width of 15 percent of the largest displacement or 50 CID, whichever is larger);

(3) Number of cylinders or combustion chambers;

(4) Arrangement of cylinders or combustion chambers (e.g. in-line, v-shaped);

(5) Subject to the same emission standards (except for CO_2), or FEL in the case of cold temperature NMHC standards, except that a manufacturer may request to group vehicles into the same test group as vehicles subject to more stringent standards, so long as all the vehicles within the test group are

certified to the most stringent standards applicable to any vehicle within that test group. Light-duty trucks and light-duty vehicles may be included in the same test group if all vehicles in the test group are subject to the same emission standards, with the exception of the CO_2 standard and/or the total HC standard.

(b) Where vehicles are of a type which cannot be divided into test groups based on the criteria listed above (such as non-cylinder engines), the Administrator will establish test groups for those vehicles based upon the features most related to their exhaust emission characteristics.

(c) Manufacturers may further divide groups determined under paragraph (a) of this section providing the Administrator is notified in advance of any such changes in writing.

(d) Manufacturers may request the Administrator's approval to combine vehicles into a single test group which would normally not be eligible to be in a single test group. The petition should provide:

(1) Substantial evidence that all the vehicles in the larger grouping will have the similar levels of emissions;

(2) Evidence of equivalent component durability over the vehicle's useful life;

(3) Evidence that the groups will result in sufficient in-use verification program data, appropriate tracking in use, and clear liability for the Agency's recall program; and

(4) A statement that all vehicles within a test group are certified to the most stringent standards applicable to any vehicle within that test group.

(e) Unless otherwise approved by the Administrator, a manufacturer of hybrid electric vehicles must create separate test groups based on both the type of battery technology employed by the HEV and upon features most related to their exhaust emission characteristics.

(f) Unless otherwise approved by the Administrator, a manufacturer of electric vehicles must create separate test groups based on the type of battery technology, the capacity and voltage of the battery, and the type and size of the electric motor.

[64 FR 23925, May 4, 1999, as amended at 65 FR 6864, Feb. 10, 2000; 65 FR 59974, Oct. 6, 2000; 72 FR 8566, Feb. 26, 2007; 75 FR 25689, May 7, 2010]

§ 86.1828–01 Emission data vehicle selection.

(a) *FTP and SFTP testing*. Within each test group, the vehicle configuration shall be selected which is expected to be worst-case for exhaust emission compliance on candidate in-use vehicles, considering all exhaust emission constituents, all exhaust test procedures, and the potential impact of air conditioning on test results. The selected vehicle will include an air conditioning engine code unless the worst-case vehicle configuration selected is not available with air conditioning. This vehicle configuration will be used as the EDV calibration.

(b) *Evaporative/Refueling testing*. Vehicles of each evaporative/refueling family will be divided into evaporative/refueling emission control systems.

(1) The vehicle configuration expected to exhibit the highest evaporative and/or refueling emission on candidate in-use vehicles shall be selected for each evaporative/refueling family and evaporative refueling emission system combination from among the corresponding vehicles selected for FTP and SFTP testing under paragraph (a) of this section. Separate vehicles may be selected to be tested for evaporative and refueling testing.

(2) Each test group must be represented by both evaporative and refueling testing (provided that the refueling standards are applicable) before it may be certified. That required testing may have been conducted on a vehicle in another test group provided the tested vehicle is a member of the same evaporative/refueling family and evaporative/refueling emission system combination and it was selected for testing in accordance with the provisions of paragraph (b)(1) of this section.

(3) For evaporative/refueling emission testing, the vehicle(s) selected shall be equipped with the worst-case evaporative/refueling emission hardware available on that vehicle considering such items as canister size and

material, fuel tank size and material, purge strategy and flow rates, refueling characteristics, and amount of vapor generation.

(c) *Cold CO testing*. For cold temperature CO exhaust emission compliance for each durability group, the vehicle expected to emit the highest CO emissions at 20 degrees F on candidate in-use vehicles shall be selected from the test vehicles selected in accordance with paragraph (a) of this section.

(d) [Reserved]

(e) The manufacturer may select, using good engineering judgement, an equivalent or worst-case configuration in lieu of testing the vehicle selected in paragraphs (a) through (d) of this section. Carryover data satisfying the provisions of § 86.1839–01 may also be used in lieu of testing the configuration selected in paragraphs (a) through (d) of this section.

(f) The manufacturer shall use good engineering judgment in making selections of vehicles under this section.

(g) *Cold temperature NMHC testing*. For cold temperature NMHC exhaust emission compliance for each durability group, the manufacturer must select the vehicle expected to emit the highest NMHC emissions at 20 °F on candidate in-use vehicles from the test vehicles specified in paragraph (a) of this section. When the expected worst-case cold temperature NMHC vehicle is also the expected worst-case cold temperature CO vehicle as selected in paragraph (c) of this section, then cold temperature testing is required only for that vehicle; otherwise, testing is required for both the worst-case cold temperature CO vehicle and the worst-case cold temperature NMHC vehicle.

[64 FR 23925, May 4, 1999, as amended at 79 FR 23726, Apr. 28, 2014]

§ 86.1829–01 Durability and emission testing requirements; waivers.

(a) *Durability demonstration*. (1) One durability demonstration is required for each durability group.

(2) The configuration of the DDV is determined according to the provisions of § 86.1822–01.

(3) The DDV shall be tested and accumulate service mileage according to the provisions of §§ 86.1831–01, 86.1823, 86.1824 and 86.1825. Small volume manufacturers and small volume test groups may optionally meet the requirements of § 86.1838–01.

(b) *Emissions demonstration*—(1) *FTP and SFTP Exhaust Testing*—(i) *Testing at low altitude*. One EDV shall be tested in each test group for exhaust emissions using the FTP and SFTP test procedures of subpart B of this part and the HFET test procedure of subpart B of part 600 of this chapter. The configuration of the EDV will be determined under the provisions of § 86.1828–01 of this subpart.

(ii) *Testing at high altitude*. For high-altitude exhaust emission compliance for each test group, the manufacturer shall follow one of the following two procedures:

(A) One EDV shall be tested in each test group for exhaust emissions using the FTP test procedures of subpart B of this part. The configuration of the EDV will be determined under the provisions of § 86.1828–01; or

(B) In lieu of testing vehicles according to the provisions of paragraph (b)(1)(ii)(A) of this section, a manufacturer may provide a statement in its application for certification that, based on the manufacturer's engineering evaluation of appropriate high-altitude emission testing, all light-duty vehicles, light-duty trucks, and complete heavy-duty vehicles comply with the emission standards at high altitude.

(iii) *Data submittal waivers*. (A) In lieu of testing a methanol-fueled diesel-cycle light truck for particulate emissions a manufacturer may provide a statement in its application for certification that such light trucks comply with the applicable standards. Such a statement shall be based on previous emission tests, development tests, or other appropriate information and good engineering judgment.

(B) In lieu of testing an Otto-cycle light-duty vehicle, light-duty truck, or heavy-duty vehicle for particulate emissions for certification, a manufacturer may provide a statement in its application for certification that such vehicles comply with the applicable standards. Such a statement must be

based on previous emission tests, development tests, or other appropriate information and good engineering judgment.

(C) [Reserved]

(D) A manufacturer may petition the Administrator to waive the requirement to measure particulate emissions when conducting Selective Enforcement Audit testing of Otto-cycle vehicles.

(E) In lieu of testing a gasoline, diesel, natural gas, liquefied petroleum gas, or hydrogen fueled Tier 2 or interim non-Tier 2 vehicle for formaldehyde emissions when such vehicles are certified based upon NMHC emissions, a manufacturer may provide a statement in its application for certification that such vehicles comply with the applicable standards. Such a statement must be based on previous emission tests, development tests, or other appropriate information and good engineering judgment.

(F) In lieu of testing a petroleum-, natural gas-, liquefied petroleum gas-, or hydrogen-fueled heavy-duty vehicle for formaldehyde emissions for certification, a manufacturer may provide a statement in its application for certification that such vehicles comply with the applicable standards. Such a statement must be based on previous emission tests, development tests, or other appropriate information and good engineering judgment.

(G) For the 2012 through 2016 model years, in lieu of testing a vehicle for N_2O emissions, a manufacturer may provide a statement in its application for certification that such vehicles comply with the applicable standards. Such a statement may also be used for 2017 and 2018 model year vehicles only if the application for certification for those vehicles is based upon data carried over from a prior model year, as allowed under this subpart. No 2019 and later model year vehicles may be waived from testing for N_2O emissions. Such a statement must be based on previous emission tests, development tests, or other appropriate information and good engineering judgment. Vehicles certified to N_2O standards using a compliance statement in lieu of submitting test data are not required to collect and submit N_2O emission data under the in-use verification testing requirements of § 86.1845.

(2) *Evaporative/Refueling testing*. Vehicles of each evaporative/refueling family will be divided into evaporative/refueling emission control systems. Applicability of the refueling test requirements of this paragraph shall be determined in accordance with the applicability of the refueling loss standards under the provisions of § 86.1810.

(i) *Testing at low altitude*. One EDV in each evaporative/refueling family and evaporative/refueling emission control system combination must be tested in accordance with the evaporative/refueling test procedure requirement of subpart B of this part. The configuration of the EDV will be determined under the provisions of § 86.1828–01. The EDV must also be tested for exhaust emission compliance using the FTP and SFTP procedures of subpart B of this part. In lieu of testing natural gas or hydrogen fueled vehicles to demonstrate compliance with the evaporative and refueling emission standards specified in this subpart, a manufacturer may provide a statement in its application for certification that, based on the manufacturer's engineering evaluation of appropriate testing and/or design parameters, all light-duty vehicles, light-duty trucks, and complete heavy-duty vehicles comply with applicable emission standards. This same testing exemption applies for vehicles fueled by liquefied petroleum gas, except that refueling tests are required for systems that allow venting during the refueling operation.

(ii) *Testing at high altitude*. For high-altitude evaporative and/or refueling emission compliance for each evaporative/refueling family, the manufacturer shall follow one of the following two procedures:

(A) One EDV in each evaporative/refueling family and evaporative/refueling emission control system combination shall be tested in accordance with the evaporative/refueling test procedure requirement of subpart B of this part. The configuration of the EDV will be determined under the provisions of § 86.1824–01. The EDV must also be tested for exhaust emissions using the FTP procedures of subpart B of this part while operated at high altitude; or

(B) In lieu of testing vehicles according to the provisions of paragraph (b)(2)(ii)(A) of this section, a manufacturer may provide a statement in its application for certification that, based on the manufacturer's engineering evaluation of such high-altitude emission testing as the manufacturer deems appropriate, all light-duty vehicles, light-duty trucks, and complete heavy-duty vehicles comply with the emission standards at high altitude.

(iii) Optional waiver of two-diurnal evaporative certification test for gasoline- and ethanol-fueled vehicles. In lieu of testing gasoline-fueled and ethanol-fueled vehicles for the supplemental two-diurnal test sequence according to the provisions of paragraphs (b)(2)(i) and (b)(2)(ii) of this section, a manufacturer may optionally provide a statement of compliance in its application for certification that, based on the manufacturer's good engineering judgement, all light-duty vehicles, light-duty trucks and complete heavy-duty vehicles in the applicable evaporative/refueling emission family comply with the evaporative emission standard for the supplemental two-diurnal test sequence.

(A) The option to provide a statement of compliance in lieu of 2-diurnal evaporative certification test data outlined in paragraph (b)(2)(iii) of this section is limited to vehicles with conventional evaporative emission control systems (as determined by the Administrator). This option may be used for vehicles in evaporative/refueling families which are certified to the applicable two-diurnal, three-diurnal, running loss, and refueling emission standards. EPA may perform confirmatory 2-diurnal evaporative emission testing on certification test vehicles which are certified using this option (even though the manufacturer may not have performed a 2-diurnal evaporative test during the certification process). If data shows noncompliance, noncompliance will be addressed through 86.1851. As well, if data shows noncompliance, EPA may not normally allow for subsequent waivers for the applicable evaporative family.

(B) Manufacturers shall supply information if requested by EPA in support of the statement of compliance outlined in paragraph (b)(2)(iii) of this section. This information shall include evaporative calibration information for the emission-data test vehicle and for other vehicles in the evaporative/refueling family, including, but not limited to, canister type, canister volume, canister working capacity, fuel tank volume, fuel tank geometry, the type of fuel delivery system (return, returnless, variable flow fuel pump, etc.), a description of the input parameters and software strategy used to control the evaporative canister purge, the nominal purge flow volume (in bed volumes) when vehicles are driven over the 2-diurnal (FTP) driving cycle, the nominal purge flow volume (in bed volumes) when vehicles are driven over the 3-diurnal (FTP + running loss) driving cycle, and other supporting information as necessary to demonstrate that the purge flow rate calibration on the 2-diurnal test sequence is adequate to comply with the evaporative emission standard for the supplemental two-diurnal test sequence.

(iv) For diesel-fueled light-duty vehicles, a manufacturer may provide a statement in the application for certification that vehicles comply with the refueling emission standard instead of submitting test data. Such a statement must be based on previous emission tests, development tests, or other appropriate information, and good engineering judgment.

(3) *Cold temperature CO and cold temperature NMHC Testing*. The manufacturer must test one EDV in each durability group for cold temperature CO and cold temperature NMHC exhaust emission compliance in accordance with the test procedures in subpart C of this part or with alternative procedures approved in advance by the Administrator. The selection of which EDV and test group within the durability group will be tested for cold temperature CO and cold temperature NMHC compliance will be determined under the provisions of § 86.1828–10(c) and (g).

(4) *Electric vehicles and fuel cell vehicles*. For electric vehicles and fuel cell vehicles, manufacturers may provide a statement in the application for certification that vehicles comply with all

the requirements of this subpart instead of submitting test data. Such a statement must be based on previous emission tests, development tests, or other appropriate information, and good engineering judgment.

(5) *Idle CO testing*. To determine idle CO emission compliance for light-duty trucks and complete heavy-duty vehicles, the manufacturer shall follow one of the following two procedures:

(i) For test groups containing light-duty trucks and complete heavy-duty vehicles, each EDV shall be tested in accordance with the idle CO testing procedures of subpart B of this part; or

(ii) In lieu of testing light trucks and complete heavy-duty vehicles for idle CO emissions, a manufacturer may provide a statement in its application for certification that, based on the manufacturer's engineering evaluation of such idle CO testing as the manufacturer deems appropriate, all light-duty trucks and complete heavy-duty vehicles comply with the idle CO emission standards.

(c) *Running change testing*. Running change testing shall be conducted as required under the provisions of § 86.1842–01.

(d) [Reserved]

[64 FR 23925, May 4, 1999, as amended at 65 FR 6864, Feb. 10, 2000; 65 FR 59975, Oct. 6, 2000; 66 FR 5193, Jan. 18, 2001; 66 FR 19310, Apr. 13, 2001; 70 FR 72929, Dec. 8, 2005; 71 FR 2836, Jan. 17, 2006; 72 FR 8566, Feb. 26, 2007; 75 FR 25689, May 7, 2010; 76 FR 19874, Apr. 8, 2011; 77 FR 63161, Oct. 15, 2012; 79 FR 23726, Apr. 28, 2014]

§ 86.1829–15 Durability and emission testing requirements; waivers.

This section describes general testing requirements for certifying vehicles under this subpart, and includes several provisions allowing for statements of compliance instead of testing in certain circumstances. Where a manufacturer provides a statement instead of test data under this section, it must be based on previous emission tests, development tests, or other appropriate information, and on good engineering judgment.

(a) One durability demonstration is required for each durability group. The configuration of the DDV is determined according to § 86.1822. The DDV shall be tested and accumulate service mileage according to the provisions of §§ 86.1823, 86.1824, 86.1825, and 86.1831. Small-volume manufacturers and small-volume test groups may optionally use the alternative durability provisions of § 86.1838.

(b) The manufacturer must test EDVs as follows to demonstrate compliance with emission standards:

(1) Test one EDV in each durability group using the test procedures in 40 CFR part 1066 to demonstrate compliance with cold temperature CO and NMHC exhaust emission standards.

(2) Test one EDV in each test group using the FTP, SFTP, and HFET test procedures in 40 CFR part 1066 to demonstrate compliance with other exhaust emission standards.

(3) Test one EDV in each evaporative/refueling family and evaporative/refueling emission control system combination using the test procedures in subpart B of this part to demonstrate compliance with evaporative and refueling emission standards.

(c) The manufacturer must demonstrate compliance with emission standards at low-altitude conditions as described in paragraph (b) of this section. For standards that apply at high-altitude conditions, the manufacturer may either perform the same tests or provide a statement in the application for certification that, based on an engineering evaluation of appropriate testing to measure or simulate high-altitude emissions, all vehicles comply with applicable emission standards at high altitude.

(d) Manufacturers may omit exhaust testing for certification in certain circumstances as follows:

(1) For vehicles subject to the Tier 3 PM standards in § 86.1811, a manufacturer may provide a statement in the application for certification that vehicles comply with applicable PM standards instead of submitting PM test data for a certain number of vehicles. However, each manufacturer must test vehicles from a minimum number of durability groups as follows:

(i) Manufacturers with a single durability group subject to the Tier 3 PM standards in § 86.1811 must submit PM test data for that group.

(ii) Manufacturers with two to eight durability groups subject to the Tier 3

PM standards in § 86.1811 must submit PM test data for at least two durability groups each model year. EPA will work with the manufacturer to select durability groups for testing, with the general expectation that testing will rotate to cover a manufacturer's whole product line over time. If a durability group has been certified in an earlier model year based on submitted PM data, and that durability group is eligible for certification using carryover test data, that carryover data may count toward meeting the requirements of this paragraph (d)(1), subject to the selection of durability groups.

(iii) Manufacturers with nine or more durability groups subject to the Tier 3 PM standards in § 86.1811 must submit PM test data for at least 25 percent of those durability groups each model year. We will work with the manufacturer to select durability groups for testing as described in paragraph (d)(1)(ii) of this section.

(2) Small-volume manufacturers may provide a statement in the application for certification that vehicles comply with the applicable PM standard instead of submitting test data.

(3) Manufacturers may omit PM measurements for fuel economy and GHG testing conducted in addition to the testing needed to demonstrate compliance with the PM emission standards.

(4) Manufacturers may provide a statement in the application for certification that vehicles comply with the applicable formaldehyde standard instead of submitting test data.

(5) When conducting Selective Enforcement Audit testing, a manufacturer may petition the Administrator to waive the requirement to measure PM emissions and formaldehyde emissions.

(6) For model years 2012 through 2016, a manufacturer may provide a statement in its application for certification that vehicles comply with the applicable standards instead of measuring N_2O emissions. Such a statement may also be used for model year 2017 and 2018 vehicles only if the application for certification for those vehicles is based upon data carried over from a prior model year, as allowed under this subpart. No model year 2019 and later vehicles may be waived from testing for N_2O emissions. Vehicles certified to N_2O standards using a compliance statement instead of submitting test data are not required to collect and submit N_2O emission data under the in-use testing requirements of § 86.1845.

(e) Manufacturers may omit evaporative or refueling testing for certification in certain circumstances as follows:

(1) For diesel-fueled vehicles, a manufacturer may provide a statement in the application for certification that vehicles comply with the refueling emission standard instead of submitting test data.

(2) For vehicles fueled by natural gas, a manufacturer may provide a statement in the application for certification that vehicles comply with evaporative emission standards instead of submitting test data. Compressed natural gas vehicles meeting the requirements for fueling connection devices in § 86.1813–17(f)(1) are deemed to comply with evaporative and refueling emission standards.

(3) For vehicles fueled by liquefied petroleum gas, a manufacturer may provide a statement in the application for certification that vehicles comply with evaporative and refueling emission standards instead of submitting test data, except that refueling tests are required for systems that allow venting during the refueling operation.

(4) Manufacturers may provide a statement in the application for certification that vehicles comply with the leak standard in § 86.1813 instead of submitting test data.

(5) For vehicles certified to the refueling emission standards in §§ 86.1811 or 86.1813, a manufacturer may provide a statement in the application for certification that vehicles comply with the fuel dispensing spitback standard instead of submitting test data.

(6) In lieu of testing vehicles for the supplemental two-diurnal test sequence, a manufacturer may optionally provide a statement of compliance in its application for certification that, based on the manufacturer's good engineering judgment, all vehicles in the evaporative/refueling emission family comply with the evaporative emission

standard for the supplemental two-diurnal test sequence.

(i) The option to provide a statement of compliance in lieu of 2-diurnal evaporative certification test data is limited to vehicles with conventional evaporative emission control systems (as determined by the Administrator). EPA may perform confirmatory 2-diurnal evaporative emission testing on test vehicles certified using this option. If data shows noncompliance, it will be addressed through § 86.1851. Also, if data shows noncompliance, EPA will generally disallow subsequent waivers for the applicable evaporative family.

(ii) Manufacturers shall supply information if requested by EPA in support of the statement of compliance described in this paragraph (e)(6). This information shall include evaporative calibration information for the emission-data vehicle and for other vehicles in the evaporative/refueling family, including, but not limited to, canister type, canister volume, canister working capacity, canister shape and internal configuration, fuel tank volume, fuel tank geometry, the type of fuel delivery system (return, returnless, variable flow fuel pump, etc.), a description of the input parameters and software strategy used to control the evaporative canister purge, the nominal purge flow volume (in bed volumes) when vehicles are driven over the 2-diurnal (FTP) driving cycle, the nominal purge flow volume (in bed volumes) when vehicles are driven over the 3-diurnal (FTP + running loss) driving cycle, and other supporting information as necessary to demonstrate that the purge flow rate calibration on the 2-diurnal test sequence is adequate to comply with the evaporative emission standard for the supplemental two-diurnal test sequence.

(7) Where a California evaporative emission standard is at least as stringent as a comparable federal evaporative emission standard for a vehicle, we may accept test data demonstrating compliance with the California standard as demonstrating compliance with the comparable standard under this subpart. We may require you to provide test data clearly demonstrating that a vehicle tested using the California-specified test procedures will meet the comparable standard under this subpart when tested using the test procedures specified in this part.

(8) Through model year 2019, we may accept test data demonstrating compliance with the California refueling emission standard as demonstrating compliance with the analogous refueling emission standard under this subpart if all the following conditions apply:

(i) You certified the vehicles in model year 2016 to California's refueling emission standards.

(ii) You are certifying the vehicles to refueling standards for the new model year based on carryover data instead of performing new testing.

(iii) You are also certifying the vehicles for evaporative emissions based on California test procedures under the provisions of paragraph (e)(6) of this section.

(9) For complete vehicles above 10,000 pounds GVWR with fuel tanks exceeding 35 gallons nominal fuel tank capacity, and for any incomplete vehicles above 10,000 pounds GVWR, a manufacturer may provide a statement in the application for certification that vehicles comply with refueling emission standards instead of submitting test data, consistent with 40 CFR 1037.103(c).

(f) For electric vehicles and fuel cell vehicles, manufacturers may provide a statement in the application for certification that vehicles comply with all the requirements of this subpart instead of submitting test data. Tailpipe emissions of regulated pollutants from vehicles powered solely by electricity are deemed to be zero.

[79 FR 23727, Apr. 28, 2014, as amended at 80 FR 9108, Feb. 19, 2015]

§ 86.1830–01 Acceptance of vehicles for emission testing.

(a) *General test vehicle requirements.* (1) All test vehicles shall be tested in the proper configurations as specified in § 86.1822–01, § 86.1828–01, or § 86.1842–01, as applicable for the type of test conducted.

(2) Components affecting emissions which are used to build test vehicles shall either be randomly selected production parts or parts verified to be in

the middle 50 percent of the tolerance range. The manufacturer will determine which components affect emissions using good engineering judgment.

(3) Test vehicles must have air conditioning installed and operational if that configuration is available with air conditioning. Optional equipment must be installed or represented on test vehicles according to the provisions of § 86.1832–01.

(4) Test vehicles must receive proper scheduled maintenance as established by the manufacturer according to the provisions of § 86.1834–01(b) or (c). Unscheduled maintenance must be approved under the provisions of § 86.1834–01(d).

(5) Vehicle mileage shall be accumulated in accordance with § 86.1831–01.

(6) The road load forces and equivalent test weight used during testing will be determined according to the provisions of § 86.129–00.

(7) Test vehicles shall have the appropriate emission testing hardware installed (e.g., exhaust pipe testing flange, fuel tank drain, access ports to evaporative canisters, and fuel tank heat blanket) and shall have tires with appropriate tire wear.

(b) *Special provisions for durability data vehicles.* (1) For DDV's, the mileage at all test points shall be within 250 miles of the scheduled mileage point as required under § 86.1823–08(c)(3). Manufacturers may exceed the 250 mile upper limit if there are logistical reasons for the deviation and the manufacturer determines that the deviation will not affect the representativeness of the durability demonstration.

(2) For DDV's aged using the standard or a customized/alternative whole-vehicle cycle, all emission-related hardware and software must be installed and operational during all mileage accumulation after the 5000-mile test point.

(3) DDV's may be reconfigured before the 5000-mile test point providing that the representativeness of the emission results will not be affected. Manufacturers shall use good engineering judgment in making such determinations.

(c) *Special provisions for emission data vehicles.* (1) All EDV's shall have at least the minimum number of miles accumulated to achieve stabilized emission results according to the provisions of § 86.1831–01(c).

(2) Within a durability group, the manufacturer may alter any emission data vehicle (or other vehicles such as current or previous model year emission data vehicles, running change vehicles, fuel economy data vehicles, and development vehicles) in lieu of building a new test vehicle providing that the modification will not impact the representativeness of the vehicle's test results. Manufacturers shall use good engineering judgment in making such determinations. Development vehicles which were used to develop the calibration selected for emission data testing may not be used as the EDV for that configuration. Vehicles from outside the durability group may be altered with advance approval of the Administrator.

(3) Components used to reconfigure EDV's under the provisions of paragraph (c)(2) of this section must be appropriately aged if necessary to achieve representative emission results. Manufacturers must determine the need for component aging and the type and amount of aging required using good engineering judgment.

(4) Bench-aged hardware may be installed on an EDV for emission testing as a method of determining certification levels (projected emission levels at full or intermediate useful life) using bench aging procedures under the provisions of § 86.1823.

[64 FR 23925, May 4, 1999, as amended at 71 FR 2836, Jan. 17, 2006]

§ 86.1831–01 Mileage accumulation requirements for test vehicles.

(a) *Durability Data Vehicles.* (1) The manufacturer must accumulate mileage on DDV's using the procedures in § 86.1823.

(2) All tests required by this subpart on durability data vehicles shall be conducted within 250 miles of each of the nominal test point mileage. This ±250 mile test point mileage tolerance may be modified with the advance approval of the Administrator if the basis for the written request is to prevent an

interruption of durability mileage accumulation due to test scheduling conflicts for weekends, holidays, or other similar circumstances.

(b) *Emission data vehicles and running change vehicles.* (1) The standard method of mileage accumulation for emission data vehicles and running change vehicles is mileage accumulation using either the Standard Road Cycle specified in appendix V to this part or the Durability Driving Schedule specified in appendix IV to this part.

(2) The manufacturer may use an alternative mileage accumulation method providing the form and extent of the service accumulation represents normal driving patterns for that vehicle, the method is consistent with good engineering judgment, and the method is described in the application for certification.

(3) Except with the advance approval of the Administrator, all vehicles will accumulate mileage at a measured curb weight which is within 100 pounds of the estimated curb weight. If the loaded vehicle weight is within 100 pounds of being included in the next higher inertia weight class as specified in § 86.129, the manufacturer may elect to conduct the respective emission tests at higher loaded vehicle weight.

(c) The manufacturer shall determine the mileage at which the emission control system and engine combination is stabilized for emission-data testing. The manufacturer shall provide to the Administrator if requested, a record of the analysis used in making this determination. The manufacturer may elect to accumulate 2,000 miles (3,219 kilometers) or more on each test vehicle without making a determination. The manufacturer must accumulate a minimum of 1,000 miles (1,608 kilometers) on each emission data vehicle.

(d) All test vehicle mileage must be accurately determined, recorded, and reported to the Administrator upon request.

[64 FR 23925, May 4, 1999, as amended at 71 FR 2836, Jan. 17, 2006]

§ 86.1832–01 Optional equipment and air conditioning for test vehicles.

For test vehicles selected under §§ 86.1822–01 and 86.1828–01:

(a)(1) Where it is expected that more than 33 percent of a car line, within a test group, will be equipped with an item (whether that item is standard equipment or an option), the full estimated weight of that item must be included in the curb weight computation for each vehicle available with that item in that car line, within that test group.

(2) Where it is expected that 33 percent or less of the car line, within a test group, will be equipped with an item (whether that item is standard equipment or an option), no weight for that item will be added in computing the curb weight for any vehicle in that car line, within that test group, unless that item is standard equipment on the vehicle.

(3) In the case of mutually exclusive options, only the weight of the heavier option will be added in computing the curb weight.

(4) Optional equipment weighing less than three pounds per item need not be considered.

(b)(1) Where it is expected that more than 33 percent of a car line, within a test group, will be equipped with an item (whether that item is standard equipment or an option) that can reasonably be expected to influence emissions, then such items must actually be installed (unless excluded under paragraph (b)(2) of this section) on all emission data and durability data vehicles of that car line, within that test group, on which the items are intended to be offered in production. Items that can reasonably be expected to influence emissions include, but are not limited to: air conditioning, power steering, and power brakes.

(2) If the manufacturer determines by test data or engineering evaluation that the actual installation of the optional equipment required by paragraph (b)(1) of this section does not affect the emissions or fuel economy values, the optional equipment need not be installed on the test vehicle.

(3) The weight of the options must be included in the design curb weight and must also be represented in the weight of the test vehicles.

(4) The engineering evaluation, including any test data, used to support the deletion of optional equipment

from test vehicles, shall be maintained by the manufacturer and be made available to the Agency upon request by the Administrator within 15 business days.

(c) Except for air conditioning, where it is expected that 33 percent or less of a car line, within a test group, will be equipped with an item (whether that item is standard equipment or an option) that can reasonably be expected to influence emissions, that item may not be installed on any emission data vehicle or durability data vehicle of that car line within that test group, unless that item is standard equipment on that vehicle or specifically required by the Administrator.

(d) Air conditioning must be installed and operational on any emission data vehicle of any vehicle configuration that is projected to be available with air conditioning regardless of the rate of installation of air conditioning within the car line. Paragraphs (a) through (c) of this section will be used to determine whether the weight of the air conditioner will be included in the equivalent test weight calculations for emission testing.

§ 86.1833–01 Adjustable parameters.

(a) At the time that emission data vehicles are selected for the test fleet, a determination shall be made of those vehicle or engine parameters which will be subject to adjustment for certification, Selective Enforcement Audit and Production Compliance Audit testing, the adequacy of the limits, stops, seals, or other means used to inhibit adjustment, and the resulting physically adjustable ranges for each such parameter. The manufacturer shall use good engineering judgment in making such determinations and shall notify the Administrator of its determinations prior to emission data vehicle testing for the affected test groups (preferably at an annual preview meeting scheduled before the manufacturer begins certification activities for the model year).

(1) *Determining parameters subject to adjustment.* (i) The following parameters may be subject to adjustment: the idle fuel-air mixture parameter on Otto-cycle vehicles; the choke valve action parameter(s) on carbureted, Otto-cycle vehicles (or engines); or any parameter on any vehicle (Otto-cycle or diesel) which is physically capable of being adjusted, may significantly affect emissions, and was not present on the manufacturer's vehicles (or engines) in the previous model year in the same form and function.

(ii) Any other parameters on any vehicle or engine which are physically capable of being adjusted and which may significantly affect emissions may be determined to be subject to adjustment. However, the Administrator may do so only if he/she has previously notified the manufacturer that he/she might do so and has found, at the time he/she gave this notice, that the intervening period would be adequate to permit the development and application of the requisite technology, giving appropriate consideration to the cost of compliance within such period. In no event will this notification be given later than September 1 of the calendar year two years prior to the model year.

(iii) In determining the parameters subject to adjustment, the following shall be taken into consideration: the likelihood that, for each of the parameters listed in paragraphs (e)(1) (i) and (ii) of this section, settings other than the manufacturer's recommended setting will occur on in-use vehicles (or engines). In determining likelihood, such factors may be considered as information contained in the preliminary application, surveillance information from similar in-use vehicles, the difficulty and cost of gaining access to an adjustment, damage to the vehicle if an attempt is made to gain such access and the need to replace parts following such attempt, and the effect of settings other than the manufacturer's recommended setting on vehicle performance characteristics including emission characteristics.

(2)(i) A parameter may be determined to be adequately inaccessible or sealed if:

(A) In the case of an idle mixture screw, the screw is recessed within the carburetor casting and sealed with lead, thermosetting plastic, or an inverted elliptical spacer or sheared off after adjustment at the factory, and the inaccessibility is such that the

screw cannot be accessed and/or adjusted with simple tools in one-half hour or for $20 (1978 dollars) or less;

(B) In the case of a choke bimetal spring, the plate covering the bimetal spring is riveted or welded in place, or held in place with nonreversible screws;

(C) In the case of a parameter which may be adjusted by elongating or bending adjustable members (e.g., the choke vacuum break), the elongation of the adjustable member is limited by design or, in the case of a bendable member, the member is constructed of a material which when bent would return to its original shape after the force is removed (plastic or spring steel materials);

(D) In the case of any parameter, the manufacturer demonstrates that adjusting the parameter to settings other than the manufacturer's recommended setting takes more than one-half hour or costs more than $20 (1978 dollars).

(ii) A physical limit or stop shall be determined to be an adequate restraint on adjustability if:

(A) In the case of a threaded adjustment, the threads are terminated, pinned, or crimped so as to prevent additional travel without breakage or need for repairs which take more than one-half hour or cost more than $20 (1978 dollars);

(B) The adjustment is ineffective at the end of the limits of travel regardless of additional forces or torques applied to the adjustment;

(C) The manufacturer demonstrates that travel or rotation limits cannot be exceeded with the use of simple and inexpensive tools (screwdriver, pliers, open-end or box wrenches, etc.) without incurring significant and costly damage to the vehicle or control system or without taking more than one-half hour or costing more than $20 (1978 dollars).

(iii) If manufacturer service manuals or bulletins describe routine procedures for gaining access to a parameter or for removing or exceeding a physical limit, stop, seal or other means used to inhibit adjustment, or if surveillance data indicate that gaining access, removing, or exceeding is likely, paragraphs (a)(2)(i) and (ii) of this section shall not apply for that parameter.

(iv) In determining the adequacy of a physical limit, stop, seal, or other means used to inhibit adjustment of a parameter not covered by paragraph (a)(2)(i) or (ii) of this section, the following shall be considered: the likelihood that it will be circumvented, removed, or exceeded on in-use vehicles. In determining likelihood, such factors may be considered as, but not limited to, information contained in the preliminary application; surveillance information from similar in-use vehicles; the difficulty and cost of circumventing, removing, or exceeding the limit, stop, seal, or other means; damage to the vehicle if an attempt is made to circumvent, remove, or exceed it and the need to replace parts following such attempt; and the effect of settings beyond the limit, stop, seal, or other means on vehicle performance characteristics other than emission characteristics.

(v) In the case of electronic components on circuit boards (such as on-board computers) the board is covered with an epoxy resin which inhibits the access to components on the board (commonly referred to as potting).

(3) Two physically adjustable ranges shall be determined for each parameter subject to adjustment:

(i)(A) In the case of a parameter determined to be adequately inaccessible or sealed, the following may be included within the physically adjustable range applicable to testing under this subpart: all settings within the production tolerance associated with the nominal setting for that parameter, as specified by the manufacturer in the application for certification or other information; or

(B) In the case of other parameters, all settings within physical limits or stops determined to be adequate restraints on adjustability shall be included within this range. The production tolerances on the location of these limits or stops may be included when determining the physically adjustable range.

(ii)(A) In the case of a parameter determined to be adequately inaccessible or sealed, only the actual settings to which the parameter is adjusted during production shall be included within the physically adjustable range applicable

to testing under subparts G or K (Selective Enforcement Audit and Production Compliance Audit) of this part; or

(B) In the case of other parameters, all settings within physical limits or stops determined to be adequate restraints on adjustability, as they are actually located on the test vehicle, shall be included within the range.

(b) In lieu of making the determinations required in paragraph (a) of this section, the manufacturer may request a determination be made by the Administrator prior to emission testing. In that case, all the information discussed in paragraph (a) of this section shall be provided to the Administrator. The Administrator will respond within 90 days (excluding the elapsed time during which additional information requested by the Administrator is being gathered by the manufacturer) following the receipt of the request for determination.

(c) If the Administrator determines that the decisions made by the manufacturer under the provisions of paragraph (a) of this section were not made using good engineering judgment, the Administrator will overrule the manufacturers' decisions and conduct testing for Certification, Selective Enforcement Audit and/or Production Compliance Audit purposes by adjusting parameters according to his/her determination of those vehicle or engine parameters subject to adjustment, the adequacy of the limits, stops, seals, or other means used to inhibit adjustment, and the resulting physically adjustable ranges for each such parameter. Furthermore, the Administrator may reject testing performed by the manufacturer which failed to follow his/her determinations.

(d) Within 30 days following receipt of notification of the Administrator's determinations made under paragraph (b) or (c) of this section, the manufacturer may request a hearing on the Administrator's determinations. The request shall be in writing, signed by an authorized representative of the manufacturer, and shall include a statement specifying the manufacturer's objections to the Administrator's determinations, and data in support of such objections. If, after review of the request and supporting data, the Administrator finds that the request raises a substantial factual issue, he shall provide the manufacturer a hearing in accordance with § 86.1853–01 with respect to such issue.

§ 86.1834–01 Allowable maintenance.

(a) Maintenance performed on vehicles, engines, subsystems, or components used to determine exhaust, evaporative or refueling emission deterioration factors, as appropriate, is classified as either emission-related or non-emission-related and each of these can be classified as either scheduled or unscheduled. Further, some emission-related maintenance is also classified as critical emission-related maintenance.

(b) This section specifies emission-related scheduled maintenance for purposes of obtaining durability data and for inclusion in maintenance instructions furnished to purchasers of new motor vehicles and under § 86.1808–01.

(1) All emission-related scheduled maintenance for purposes of obtaining durability data must occur at the same mileage intervals (or equivalent intervals if engines, subsystems, or components are used) that will be specified in the manufacturer's maintenance instructions furnished to the ultimate purchaser of the motor vehicle or engine under § 86.1808–01. This maintenance schedule may be updated as necessary throughout the testing of the vehicle/engine, provided that no maintenance operation is deleted from the maintenance schedule after the operation has been performed on the test vehicle or engine.

(2) Any emission-related maintenance which is performed on vehicles, engines, subsystems, or components must be technologically necessary to assure in-use compliance with the emission standards. Manufacturers shall determine the technological need for maintenance using good engineering judgment. The Administrator has determined that emission-related maintenance at shorter intervals than those outlined in paragraphs (b)(3) and (4) of this section is not technologically necessary to ensure in-use compliance. However, the Administrator may determine that maintenance even more restrictive (e.g., longer intervals) than that listed in

paragraphs (b)(3) and (4) of this section is also not technologically necessary.

(3) Emission-related maintenance in addition to, or at shorter intervals than, that listed in paragraphs (b)(3)(i) through (vi) of this section will not be accepted as technologically necessary, except as provided in paragraph (b)(7) of this section.

(i)(A) The cleaning or replacement of light-duty vehicle or light-duty truck spark plugs shall occur at 30,000 miles of use and at 30,000-mile intervals thereafter.

(B) The cleaning or replacement of complete heavy-duty vehicle spark plugs shall occur at 25,000 miles (or 750 hours) of use and at 30,000-mile (or 750 hour) intervals thereafter, for vehicles certified for use with unleaded fuel only.

(ii) For light-duty vehicles and light-duty trucks, the adjustment, cleaning, repair, or replacement of the following items shall occur at 50,000 miles of use and at 50,000-mile intervals thereafter:

(A) Positive crankcase ventilation valve.

(B) Emission-related hoses and tubes.

(C) Ignition wires.

(D) Idle mixture.

(iii) For complete heavy-duty vehicles, the adjustment, cleaning, repair, or replacement of the following items shall occur at 50,000 miles (or 1,500 hours) of use and at 50,000-mile (1,500 hour) intervals thereafter:

(A) Positive crankcase ventilation valve.

(B) Emission-related hoses and tubes.

(C) Ignition wires.

(D) Idle mixture.

(E) Exhaust gas recirculation system related filters and coolers.

(iv) For light-duty trucks, light-duty vehicles, and complete heavy-duty vehicles, the adjustment, cleaning, repair, or replacement of the oxygen sensor shall occur at 80,000 miles (or 2,400 hours) of use and at 80,000-mile (or 2,400-hour) intervals thereafter.

(v) For light-duty trucks and light-duty vehicles, the adjustment, cleaning, repair, or replacement of the following items shall occur at 100,000 miles of use and at 100,000-mile intervals thereafter:

(A) Catalytic converter.

(B) Air injection system components.

(C) Fuel injectors.

(D) Electronic engine control unit and its associated sensors (except oxygen sensor) and actuators.

(E) Evaporative and/or refueling emission canister(s).

(F) Turbochargers.

(G) Carburetors.

(H) Superchargers.

(I) Exhaust gas recirculation system including all related filters and control valves.

(J) Mechanical fillpipe seals.

(vi) For complete heavy-duty vehicles, the adjustment, cleaning, repair, or replacement of the following items shall occur at 100,000 miles (or 3,000 hours) of use and at 100,000-mile (or 3,000 hour) intervals thereafter:

(A) Catalytic converter.

(B) Air injection system components.

(C) Fuel injectors.

(D) Electronic engine control unit and its associated sensors (except oxygen sensor) and actuators.

(E) Evaporative and/or refueling emission canister(s).

(F) Turbochargers.

(G) Carburetors.

(H) Exhaust gas recirculation system (including all related control valves and tubing) except as otherwise provided in paragraph (b)(3)(iii)(E) of this section.

(I) Mechanical fillpipe seals.

(4) For diesel-cycle vehicles, emission-related maintenance in addition to, or at shorter intervals than the following will not be accepted as technologically necessary, except as provided in paragraph (b)(7) of this section:

(i) The adjustment, cleaning, repair, or replacement of the positive crankcase ventilation valve shall occur at 50,000 miles of use and at 50,000-mile intervals thereafter.

(ii) The adjustment, cleaning, repair, or replacement shall occur at 100,000 miles of use and at 100,000-mile intervals thereafter of the following items:

(A) Fuel injectors.

(B) Turbocharger.

(C) Electronic engine control unit and its associated sensors and actuators.

(D) Particulate trap or trap-oxidizer system (including related components).

(E) Exhaust gas recirculation system including all related filters and control valves.

(F) Catalytic converter.

(G) Superchargers.

(iii) For vehicles that use selective catalytic reduction, the replenishment of diesel exhaust fluid shall occur at an interval that is no less than 4,000 miles for typical operation.

(5) [Reserved]

(6) *Critical emission-related components.* (i) The following components are defined as critical emission-related components:

(A) Catalytic converter.

(B) Air injection system components.

(C) Electronic engine control unit and its associated sensors (including oxygen sensor if installed) and actuators.

(D) Exhaust gas recirculation system (including all related filters and control valves).

(E) Positive crankcase ventilation valve.

(F) Evaporative and refueling emission control system components (excluding canister air filter).

(G) Particulate trap or trap-oxidizer system.

(H) Components comprising the selective catalytic reduction system (including diesel exhaust fluid tank).

(I) Any other component whose primary purpose is to reduce emissions or whose failure would commonly increase emissions of any regulated pollutant without significantly degrading engine performance.

(ii) All critical emission-related scheduled maintenance must have a reasonable likelihood of being performed in-use. The manufacturer shall be required to show the reasonable likelihood of such maintenance being performed in-use, and such showing shall be made prior to the performance of the maintenance on the durability data vehicle. Critical emission-related scheduled maintenance items which satisfy one of the conditions defined in paragraphs (b)(6)(ii) (A) through (F) of this section will be accepted as having a reasonable likelihood of the maintenance item being performed in-use, except that DEF replenishment must satisfy paragraph (b)(6)(ii)(A) or (b)(6)(ii)(F) of this section to be accepted as having a reasonable likelihood of the maintenance item being performed in-use.

(A) Data are presented which establish for the Administrator a connection between emissions and vehicle performance such that as emissions increase due to lack of maintenance, vehicle performance will simultaneously deteriorate to a point unacceptable for typical driving.

(B) Survey data are submitted which adequately demonstrate to the Administrator that, at an 80 percent confidence level, 80 percent of such engines already have this critical maintenance item performed in use at the recommended interval(s).

(C) A clearly displayed visible signal system approved by the Administrator is installed to alert the vehicle driver that maintenance is due. A signal bearing the message ''maintenance needed'' or ''check engine,'' or a similar message approved by the Administrator, shall be actuated at the appropriate mileage point or by component failure. This signal must be continuous while the engine is in operation and not be easily eliminated without performance of the required maintenance. Resetting the signal shall be a required step in the maintenance operation. The method for resetting the signal system shall be approved by the Administrator.

(D) A manufacturer may desire to demonstrate through a survey that a critical maintenance item is likely to be performed without a visible signal on a maintenance item for which there is no prior in-use experience without the signal. To that end, the manufacturer may in a given model year market up to 200 randomly selected vehicles per critical emission-related maintenance item without such visible signals, and monitor the performance of the critical maintenance item by the owners to show compliance with paragraph (b)(6)(ii)(B) of this section. This option is restricted to two consecutive model years and may not be repeated until any previous survey has been completed. If the critical maintenance involves more than one test group, the sample will be sales weighted to ensure that it is representative of all the groups in question.

(E) The manufacturer provides the maintenance free of charge, and clearly informs the customer that the maintenance is free in the instructions provided under § 86.1808–01.

(F) Any other method which the Administrator approves as establishing a reasonable likelihood that the critical maintenance will be performed in use.

(iii) Visible signal systems used under paragraph (b)(6)(ii)(C) of this section are considered an element of design of the emission control system. Therefore, disabling, resetting, or otherwise rendering such signals inoperative without also performing the indicated maintenance procedure is a prohibited act under section 203(a)(3) of the Clean Air Act (42 U.S.C. 7522(a)(3)).

(7) *Changes to scheduled maintenance.* (i) For maintenance practices that existed prior to the 1980 model year, only the maintenance items listed in paragraphs (b)(3) and (4) of this section are currently considered by EPA to be emission-related. The Administrator may, however, determine additional scheduled maintenance items that existed prior to the 1980 model year to be emission-related by announcement in a FEDERAL REGISTER Notice. In no event may this notification occur later than September 1 of the calendar year two years prior to the affected model year.

(ii) In the case of any new scheduled maintenance, the manufacturer must submit a request for approval to the Administrator for any maintenance that it wishes to recommend to purchasers and perform during durability determination. New scheduled maintenance is that maintenance which did not exist prior to the 1980 model year, including that which is a direct result of the implementation of new technology not found in production prior to the 1980 model year. The manufacturer must also include its recommendations as to the category (i.e., emission-related or non-emission-related, critical or non-critical) of the subject maintenance and, for suggested emission-related maintenance, the maximum feasible maintenance interval. Such requests must include detailed evidence supporting the need for the maintenance requested, and supporting data or other substantiation for the recommended maintenance category and for the interval suggested for emission-related maintenance. Requests for new scheduled maintenance must be approved prior to the introduction of the new maintenance. The Administrator will then designate the maintenance as emission-related or non-emission-related. For maintenance items established as emission-related, the Administrator will further designate the maintenance as critical if the component which receives the maintenance is a critical component under paragraph (b)(6) of this section. For each maintenance item designated as emission-related, the Administrator will also establish a technologically necessary maintenance interval, based on industry data and any other information available to EPA. Designations of emission-related maintenance items, along with their identification as critical or non-critical, and establishment of technologically necessary maintenance intervals, will be announced in the FEDERAL REGISTER.

(iii) Any manufacturer may request a hearing on the Administrator's determinations in this paragraph (b)(7). The request shall be in writing and shall include a statement specifying the manufacturer's objections to the Administrator's determinations, and data in support of such objections. If, after review of the request and supporting data, the Administrator finds that the request raises a substantial factual issue, he shall provide the manufacturer a hearing in accordance with § 86.1853–01 with respect to such issue.

(c) Non-emission-related scheduled maintenance which is reasonable and technologically necessary (e.g., oil change, oil filter change, fuel filter change, air filter change, cooling system maintenance, adjustment of idle speed, governor, engine bolt torque, valve lash, injector lash, timing, adjustment of air pump drive belt tension, lubrication of the exhaust manifold heat control valve, lubrication of carburetor choke linkage, re-torquing carburetor mounting bolts, etc.) may be performed on durability data vehicles at the least frequent intervals recommended by the manufacturer to the ultimate purchaser, (e.g., not at the intervals recommended for severe service).

(d) *Unscheduled maintenance on durability data vehicles.* (1) Unscheduled maintenance may be performed during the testing used to determine deterioration factors, except as provided in paragraphs (d)(2) and (3) of this section, only under the following provisions defined in paragraphs (d)(1) (i) through (iii) of this section:

(i) A fuel injector or spark plug may be changed if a persistent misfire is detected.

(ii) Readjustment of an Otto-cycle vehicle cold-start enrichment system may be performed if there is a problem of stalling.

(iii) Readjustment of the engine idle speed (curb idle and fast idle) may be performed in addition to that performed as scheduled maintenance under paragraph (c) of this section if the idle speed exceeds the manufacturer's recommended idle speed by 300 rpm or more, or if there is a problem of stalling.

(2) Any other unscheduled vehicle, emission control system, or fuel system adjustment, repair, removal, disassembly, cleaning, or replacement during testing to determine deterioration factors shall be performed (using good engineering judgment) only in the following circumstances:

(i) The part failure or system malfunction, or the repair of such failure or malfunction, does not render the vehicle or engine unrepresentative of vehicles or engines in use and does not require direct access to the combustion chamber, except for spark plug, fuel injection component, or removable prechamber removal or replacement.

(ii) The need for maintenance or repairs is indicated by an overt indication of malfunction such as persistent misfiring, engine stalling, overheating, fluid leakage, loss of oil pressure, excessive fuel consumption, or excessive power loss. The Administrator shall be given the opportunity to verify the existence of an overt indication of part failure and/or vehicle/engine malfunction (e.g., misfiring, stalling, black smoke), or an activation of an audible and/or visible signal, prior to the performance of any maintenance to which such overt indication or signal is relevant under the provisions of this section.

(iii) The OBD system of a durability data vehicle representing any test group certifying fully to the Federal OBD requirements as specified in § 86.1806–01(a) through (h) has specifically detected the problem and has illuminated the malfunction indicator light.

(3) Emission measurement may not be used as a means of determining the need for unscheduled maintenance under paragraph (d)(2) of this section, except under the following conditions:

(i) The Administrator may approve unscheduled maintenance on durability data vehicles based upon a significant change in emission levels that indicates a vehicle or engine malfunction. In these cases the Administrator may first approve specific diagnostic procedures to identify the source of the problem. The Administrator may further approve of specific corrections to the problem after the problem has been identified. The Administrator may only approve the corrective action after it is determined that:

(A) The malfunction was caused by nonproduction build practices or by a previously undetected design problem;

(B) The malfunction will not occur in production vehicles or engines in use; and

(C) The deterioration factor generated by the durability data vehicle or engine will remain unaffected by the malfunction or by the corrective action (e.g., the malfunction was present for only a short period of time before detection, replacement parts are functionally representative of the proper mileage or hours, etc.).

(ii) Following any unscheduled maintenance approved under paragraph (d)(3)(i) of this section, the manufacturer shall perform an after-maintenance emission test. If the Administrator determines that the after-maintenance emission levels for any pollutant indicates that the deterioration factor is no longer representative of production, the Administrator may disqualify the durability data vehicle or engine.

(4) If a part failure or system malfunction occurrence and/or repair has

rendered the vehicle/engine unrepresentative of vehicles in use, the vehicle/engine shall not be used for determining deterioration factors.

(5) Repairs to vehicle components of a durability data vehicle other than the engine, emission control system, or fuel system, shall be performed only as a result of part failure, vehicle system malfunction, or with the advance approval of the Administrator.

(e) *Maintenance on emission data vehicles and engines.* (1) Adjustment of engine idle speed on emission data vehicles may be performed once before the low-mileage/low-hour emission test point. Any other engine, emission control system, or fuel system adjustment, repair, removal, disassembly, cleaning, or replacement on emission data vehicles shall be performed only with the advance approval of the Administrator.

(2) Repairs to vehicle components of an emission data vehicle other than the engine, emission control system, or fuel system, shall be performed only as a result of part failure, vehicle system malfunction, or with the advance approval of the Administrator.

(f) Equipment, instruments, or tools may not be used to identify malfunctioning, maladjusted, or defective engine components unless the same or equivalent equipment, instruments, or tools will be available to dealerships and other service outlets and:

(1) Are used in conjunction with scheduled maintenance on such components; or

(2) Are used subsequent to the identification of a vehicle or engine malfunction, as provided in paragraph (d)(2) of this section for durability data vehicles or in paragraph (e)(1) of this section for emission data vehicles; or

(3) Unless specifically authorized by the Administrator.

(g) Complete emission tests (see §§ 86.106–96 through 86.145–82) are required, unless waived by the Administrator, before and after scheduled maintenance approved for durability data vehicles. The manufacturer may perform emission tests before unscheduled maintenance. Complete emission tests are required after unscheduled maintenance which may reasonably be expected to affect emissions. The Administrator may waive the requirement to test after unscheduled maintenance. These test data may be submitted weekly to the Administrator, but shall be air posted or delivered within 7 days after completion of the tests, along with a complete record of all pertinent maintenance, including a preliminary engineering report of any malfunction diagnosis and the corrective action taken. A complete engineering report shall be delivered to the Administrator concurrently with the manufacturer's application for certification.

(h) When air conditioning SFTP exhaust emission tests are required, the manufacturer must document that the vehicle's air conditioning system is operating properly and in a representative condition. Required air conditioning system maintenance is performed as unscheduled maintenance and does not require the Administrator's approval.

[64 FR 23925, May 4, 1999, as amended at 65 FR 59975, Oct. 6, 2000; 70 FR 40443, July 13, 2005; 79 FR 46372, Aug. 8, 2014]

§ 86.1835–01 Confirmatory certification testing.

(a) *Testing by the Administrator.* (1) The Administrator may require that any one or more of the test vehicles be submitted to the Agency, at such place or places as the Agency may designate, for the purposes of conducting emissions tests. The Administrator may specify that such testing be conducted at the manufacturer's facility, in which case instrumentation and equipment specified by the Administrator shall be made available by the manufacturer for test operations. Any testing conducted at a manufacturer's facility pursuant to this paragraph shall be scheduled by the manufacturer as promptly as possible.

(i) The Administrator may adjust or cause to be adjusted any adjustable parameter of an emission-data vehicle which the Administrator has determined to be subject to adjustment for certification testing in accordance with § 86.1833–01(a)(1), to any setting within the physically adjustable range of that parameter, as determined by the Administrator in accordance with § 86.1833–01(a)(3), prior to the performance of any tests to determine whether

such vehicle or engine conforms to applicable emission standards, including tests performed by the manufacturer under § 86.1829–01(b). However, if the idle speed parameter is one which the Administrator has determined to be subject to adjustment, the Administrator shall not adjust it to a setting which causes a higher engine idle speed than would have been possible within the physically adjustable range of the idle speed parameter on the engine before it accumulated any dynamometer service, all other parameters being identically adjusted for the purpose of the comparison. The Administrator, in making or specifying such adjustments, will consider the effect of the deviation from the manufacturer's recommended setting on emissions performance characteristics as well as the likelihood that similar settings will occur on in-use light-duty vehicles, light-duty trucks, or complete heavy-duty vehicles. In determining likelihood, the Administrator will consider factors such as, but not limited to, the effect of the adjustment on vehicle performance characteristics and surveillance information from similar in-use vehicles.

(ii) For those vehicles parameters which the Administrator has not determined to be subject to adjustment during testing in accordance with § 86.1833–01(a)(1), the vehicle presented to the Administrator for testing shall be calibrated within the production tolerances applicable to the manufacturer's specifications to be shown on the vehicle label (see § 86.1807–01) as specified in the application for certification. If the Administrator determines that a vehicle is not within such tolerances, the vehicle will be adjusted, at the facility designated by the Administrator, prior to the test and an engineering report shall be submitted to the Administrator describing the corrective action taken. Based on the engineering report, the Administrator will determine if the vehicle will be used as an emission data vehicle.

(2) If the Administrator determines that the test data developed on an emission data vehicle under paragraph (a)(1) of this section would cause that vehicle to fail under the provisions of § 86.1841–01, then the following procedure shall be observed:

(i) The manufacturer may request a retest. Before the retest, those vehicle or engine parameters which the Administrator has not determined to be subject to adjustment for certification testing in accordance with § 86.1833-01(a)(1) may be readjusted to manufacturer's specification, if these adjustments were made incorrectly prior to the first test. The Administrator may adjust or cause to be adjusted any parameter which the Administrator has determined to be subject to adjustment to any setting within the physically adjustable range of that parameter, as determined by the Administrator in accordance with § 86.1833–01(a)(3). Other maintenance or repairs may be performed in accordance with § 86.1834–01. All work on the vehicle shall be done at such location and under such conditions as the Administrator may prescribe.

(ii) The vehicle will be retested by the Administrator and the results of this test shall comprise the official data for the emission-data vehicle.

(3) If sufficient durability data are not available at the time of any emission test conducted under paragraph (a)(1) of this section to enable the Administrator to determine whether an emission-data vehicle would fail, the manufacturer may request a retest in accordance with the provisions of paragraph (a)(2) of this section. If the manufacturer does not promptly make such request, he shall be deemed to have waived the right to a retest. A request for retest must be made before the manufacturer removes the vehicle from the test premises.

(4) Retesting for fuel economy reasons or for compliance with greenhouse gas exhaust emission standards in § 86.181–12 may be conducted under the provisions of § 600.008–08 of this chapter.

(b) *Manufacturer-conducted confirmatory testing.* (1) If the Administrator determines not to conduct a confirmatory test under the provisions of paragraph (a) of this section, manufacturers of light-duty vehicles, light-duty trucks, and/or medium-duty passenger vehicles will conduct a confirmatory test at their facility after submitting

the original test data to the Administrator whenever any of the conditions listed in paragraphs (b)(1)(i) through (vi) of this section exist, and complete heavy-duty vehicles manufacturers will conduct a confirmatory test at their facility after submitting the original test data to the Administrator whenever the conditions listed in paragraph (b)(1)(i) or (b)(1)(ii) of this section exist, as follows:

(i) The vehicle configuration has previously failed an emission standard;

(ii) The test exhibits high emission levels determined by exceeding a percentage of the standards specified by the Administrator for that model year;

(iii) The fuel economy value of the test as measured in accordance with the procedures in 40 CFR part 600 is higher than expected based on procedures approved by the Administrator;

(iv) The fuel economy value as measured in accordance with the procedures in part 600 of this title, is close to a Gas Guzzler Tax threshold value based on tolerances established by the Administrator for that model year; or

(v) The fuel economy value as measured in accordance with the procedures in part 600 of this title, is a potential fuel economy leader for a class of vehicles based on Administrator provided cut points for that model year.

(vi) The exhaust carbon-related exhaust emissions of the test as measured in accordance with the procedures in 40 CFR part 600 are lower than expected based on procedures approved by the Administrator.

(2) If the Administrator selects the vehicle for confirmatory testing based on the manufacturer's original test results, the testing shall be conducted as ordered by the Administrator. In this case, the manufacturer-conducted confirmatory testing specified under paragraph (b)(1) of this section would not be required.

(3) For light-duty vehicles, light-duty trucks, and medium-duty passenger vehicles the manufacturer shall conduct a retest of the FTP or highway test if the difference between the fuel economy of the confirmatory test and the original manufacturer's test equals or exceeds three percent (or such lower percentage to be applied consistently to all manufacturer conducted confirmatory testing as requested by the manufacturer and approved by the Administrator).

(i) For use in the fuel economy and exhaust greenhouse gas fleet averaging program described in 40 CFR parts 86 and 600, the manufacturer may, in lieu of conducting a retest, accept as official the lower of the original and confirmatory test fuel economy results, and by doing so will also accept as official the calculated CREE value associated with the lower fuel economy test results.

(ii) The manufacturer shall conduct a second retest of the FTP or highway test if the fuel economy difference between the second confirmatory test and the original manufacturer test equals or exceeds three percent (or such lower percentage as requested by the manufacturer and approved by the Administrator) and the fuel economy difference between the second confirmatory test and the first confirmatory test equals or exceeds three percent (or such lower percentage as requested by the manufacturer and approved by the Administrator). In lieu of conducting a second retest, the manufacturer may accept as official (for use in the fuel economy program and the exhaust greenhouse gas fleet averaging program) the lowest fuel economy of the original test, the first confirmatory test, and the second confirmatory test fuel economy results, and by doing so will also accept as official the calculated CREE value associated with the lowest fuel economy test results.

(c) *Official test determination.* (1) Whenever the Administrator or the manufacturer conducts a confirmatory test segment on a test vehicle, the results of that test segment, unless subsequently invalidated by the Administrator, shall comprise the official data for that test segment for the vehicle at the prescribed test point and the manufacturer's original test data for that test segment for that prescribed test point shall not be used in determining compliance with emission standards.

(i) If the Administrator or the manufacturer conducts more than one passing, valid, confirmatory test, the results from the first passing, valid confirmatory test shall be considered official and used in determining compliance with emission standards.

(ii) Official test results for fuel economy and exhaust CO_2 emission purposes are determined in accordance with the provisions of § 600.008–08 of this chapter.

(iii) The Administrator may stop a test after any evaporative test segment and use as official data any valid results obtained up to that point in the test, as described in subpart B of this part.

(2) Whenever the Administrator or the manufacturer does not conduct a confirmatory test on a test vehicle at a test point, the manufacturer's original test data will be accepted as the official data for that point.

(i) If the Administrator makes a determination based on testing under paragraph (a) of this section (or other appropriate correlation test data), that there is a lack of correlation between the manufacturer's test equipment or procedures and the test equipment or procedures used by the Administrator, no manufacturer's test data will be accepted for purposes of certification until the reasons for the lack of correlation are determined and the validity of the data is established by the manufacturer.

(ii) If the Administrator has reasonable basis to believe that any test data submitted by the manufacturer is not accurate or has been obtained in violation of any provisions of this subpart, the Administrator may refuse to accept that data as the official data pending retesting or submission of further information.

(iii) If the manufacturer conducts more than one test on an emission data vehicle in the same configuration (excluding confirmatory tests run under paragraph (b) of this section), the data from the last test in that series of tests on that vehicle, will constitute the official data.

(d) Upon request of the manufacturer, the Administrator may issue a conditional certificate of conformity for a test group which has not completed the Administrator testing required under paragraph (a) of this section. Such a certificate will be issued based upon the condition that the confirmatory testing be completed in an expedited manner and that the results of the testing be in compliance with all standards and procedures.

(1) If, based on this testing or any other information, the Administrator later determines that the vehicles included in this test group do not meet the applicable standards, the Administrator will notify the manufacturer that the certificate is suspended. The certificate may be suspended in whole or in part as determined by the Administrator. Upon such a notification, the manufacturer must immediately cease the introduction of the affected vehicles into commerce. The manufacturer may request a hearing to appeal the Administrators decision using the provisions of § 86.1853–01.

(2) Production of vehicles by a manufacturer under the terms of this paragraph (d) will be deemed to be a consent to recall all vehicles in the test group which the Administrator determines do not meet applicable standards, and to cause such nonconformity to be remedied at no expense to the owner.

[64 FR 23925, May 4, 1999, as amended at 65 FR 59976, Oct. 6, 2000; 66 FR 19310, Apr. 13, 2001; 75 FR 25689, May 7, 2010]

§ 86.1836–01 Manufacturer-supplied production vehicles for testing.

Any manufacturer obtaining certification under this subpart shall supply to the Administrator, upon request, a reasonable number of production vehicles selected by the Administrator which are representative of the engines, emission control systems, fuel systems, and transmission offered and typical of production models available for sale under the certificate. These vehicles shall be supplied for testing at such time and place and for such reasonable periods as the Administrator may require.

§ 86.1837–01 Rounding of emission measurements.

(a) Unless otherwise specified, the results of all emission tests shall be rounded to the number of places to the

right of the decimal point indicated by expressing the applicable emission standard of this subpart to one additional significant figure, in accordance with 40 CFR 1065.20.

(b) Fleet average NO_X value calculations, where applicable, must be rounded before comparing with the applicable fleet average standard and calculating credits generated or needed as follows: manufacturers must round to the same number of significant figures that are contained in the quantity of vehicles in the denominator of the equation used to compute the fleet average NO_X emissions, but to no less than one more decimal place than that of the applicable fleet average standard.

[64 FR 23925, May 4, 1999, as amended at 65 FR 6864, Feb. 10, 2000; 79 FR 23728, Apr. 28, 2014]

§ 86.1838–01 Small-volume manufacturer certification procedures.

(a) *Overview*. The small-volume manufacturer certification procedures described in paragraphs (b) and (c) of this section are optional. Small-volume manufacturers may use these optional procedures to demonstrate compliance with the general standards and specific emission requirements contained in this subpart.

(b) *Eligibility requirements*—(1) *Small-volume manufacturers*. (i) Optional small-volume manufacturer certification procedures apply for vehicles produced by manufacturers with the following number of combined sales of vehicles subject to standards under this subpart in all states and territories of the United States in the model year for which certification is sought, including all vehicles and engines imported under the provisions of 40 CFR 85.1505 and 85.1509:

(A) 5,000 units for the Tier 3 standards described in §§ 86.1811, 86.1813, and 86.1816. This volume threshold applies for phasing in the Tier 3 standards and for determining the corresponding deterioration factors. This is based on average nationwide sales volumes for model years 2012 through 2014 for manufacturers that sell vehicles in model year 2012. The provision allowing delayed compliance with the Tier 3 standards applies for qualifying companies even if sales after model year 2014 increase beyond 5,000 units. Manufacturers with no sales in model year 2012 may instead rely on projected sales volumes; however, if nationwide sales exceed an average value of 5,000 units in any three consecutive model years, the manufacturer is no longer eligible for provisions that apply to small-volume manufacturers after two additional model years. For example, if actual sales in model years 2015 through 2017 exceed 5,000 units, the small-volume provisions would no longer apply starting in model year 2020.

(B) No small-volume sales threshold applies for the heavy-duty greenhouse gas standards; alternative small-volume criteria apply as described in § 86.1819–14(k)(5).

(C) 15,000 units for all other requirements. See § 86.1845 for separate provisions that apply for in-use testing.

(ii) If a manufacturer's aggregated sales in the United States, as determined in paragraph (b)(3) of this section are fewer than the number of units specified in paragraph (b)(1)(i) of this section, the manufacturer (or each manufacturer in the case of manufacturers in an aggregated relationship) may certify under the provisions of paragraph (c) of this section.

(iii) A manufacturer that qualifies as a small business under the Small Business Administration regulations in 13 CFR Part 121 is eligible for all the provisions that apply for small-volume manufacturers under this subpart. See § 86.1801–12(j) to determine whether companies qualify as small businesses.

(iv) The sales volumes specified in this section are based on actual sales, unless otherwise specified.

(v) Except for delayed implementation of new emission standards, an eligible manufacturer must transition out of the special provisions that apply for small-volume manufacturers as described in § 86.1801–12(k)(2)(i) through (iii) if sales volumes increase above the applicable threshold.

(2) *Small-volume test groups*. (i) If the aggregated sales in all states and territories of the United States, as determined in paragraph (b)(3) of this section are equal to or greater than 15,000 units, then the manufacturer (or each

manufacturer in the case of manufacturers in an aggregated relationship) will be allowed to certify a number of units under the small-volume test group certification procedures in accordance with the criteria identified in paragraphs (b)(2)(ii) through (iv) of this section.

(ii) If there are no additional manufacturers in an aggregated relationship meeting the provisions of paragraph (b)(3) of this section, then the manufacturer may certify whole test groups whose total aggregated sales (including heavy-duty engines) are less than 15,000 units using the small-volume provisions of paragraph (c) of this section.

(iii) If there is an aggregated relationship with another manufacturer which satisfies the provisions of paragraph (b)(3) of this section, then the following provisions shall apply:

(A) If none of the manufacturers own 50 percent or more of another manufacturer in the aggregated relationship, then each manufacturer may certify whole test groups whose total aggregated sales (including heavy-duty engines) are less than 15,000 units using the small-volume provisions of paragraph (c) of this section.

(B) If any of the manufacturers own 50 percent or more of another manufacturer in the aggregated relationship, then the limit of 14,999 units must be shared among the manufacturers in such a relationship. In total for all the manufacturers involved in such a relationship, aggregated sales (including heavy-duty engines) of up to 14,999 units may be certified using the small-volume provisions of paragraph (c) of this section. Only whole test groups shall be eligible for small-volume status under paragraph (c) of this section.

(iv) In the case of a joint venture arrangement (50/50 ownership) between two manufacturers, each manufacturer retains its eligibility for 14,999 units under the small-volume test group certification procedures, but the joint venture must draw its maximum 14,999 units from the units allocated to its parent manufacturers. Only whole test groups shall be eligible for small-volume status under paragraph (c) of this section.

(3) *Sales aggregation for related manufacturers.* The projected or actual sales from different firms shall be aggregated in the following situations:

(i) Vehicles and/or engines produced by two or more firms, one of which is 10 percent or greater part owned by another;

(ii) Vehicles and/or engines produced by any two or more firms if a third party has equity ownership of 10 percent or more in each of the firms;

(iii) Vehicles and/or engines produced by two or more firms having a common corporate officer(s) who is (are) responsible for the overall direction of the companies;

(iv) Vehicles and/or engines imported or distributed by all firms where the vehicles and/or engines are manufactured by the same entity and the importer or distributor is an authorized agent of the entity.

(c) *Small-volume provisions.* Small-volume manufacturers and small-volume test groups shall demonstrate compliance with all applicable sections of this subpart, with the following exceptions:

(1) *Durability demonstration.* Use the provisions of § 86.1826 rather than the requirements of §§ 86.1823, 86.1824, and 86.1825.

(2) *In-use verification testing.* Measure emissions from in-use vehicles as described in § 86.1845, subject to the following additional provisions:

(i) In-use verification test vehicles may be procured from customers or may be owned by, or under the control of the manufacturer, provided that the vehicle has accumulated mileage in typical operation on public streets and has received typical maintenance.

(ii) In lieu of procuring in-use verification test vehicles that have a minimum odometer reading of 50,000 miles, a manufacturer may demonstrate to the satisfaction of the Agency that, based on owner survey data, the average mileage accumulated after 4 years for a given test group is less than 50,000 miles. The Agency may approve procurement of in-use verification test vehicles that have a lower minimum odometer reading based on such data.

(iii) The provisions of § 86.1845–04(c)(2) that require one vehicle of each test group during high mileage in-use verification testing to have a minimum odometer mileage do not apply.

(iv) Manufacturers intending to use the provisions of this paragraph (c) shall submit to the Agency a plan detailing how these provisions will be met before submitting an application for certification for the subject vehicles.

(d) *Operationally independent manufacturers.* Manufacturers may submit an application to EPA requesting treatment as an operationally independent manufacturer. A manufacturer that is granted operationally independent status may qualify for all the regulatory provisions of this subpart that apply for small-volume manufacturers on the basis of its own vehicle production and/or sales volumes, and would not require aggregation with related manufacturers. In this paragraph (d), the term ''related manufacturer(s)'' means manufacturers that would qualify for aggregation under the requirements of paragraph (b)(3) of this section.

(1) To request consideration for operationally independent status, the manufacturer must submit an application demonstrating that the following criteria are met, and have been continuously met for at least two years prior to submitting the application to EPA. The application must be signed by the president or the chief executive officer of the manufacturer.

(i) The applicant does not receive any financial or other means of support of economic value from any related manufacturers for purposes of vehicle design, vehicle parts procurement, research and development, and production facilities and operation. Any transactions with related manufacturers must be conducted under normal commercial arrangements like those conducted with other external parties. Any such transactions with related manufacturers shall be demonstrated to have been at competitive pricing rates to the applicant.

(ii) The applicant maintains wholly separate and independent research and development, testing, and vehicle manufacturing and production facilities.

(iii) The applicant does not use any vehicle engines, powertrains, or platforms developed or produced by related manufacturers.

(iv) The applicant does not hold any patents jointly with related manufacturers.

(v) The applicant maintains separate business administration, legal, purchasing, sales, and marketing departments as well as wholly autonomous decision making on all commercial matters.

(vi) The Board of Directors of the applicant may not share more than 25 percent of its membership with any related manufacturer. No top operational management of the applicant may be shared with any related manufacturer, including the president, the chief executive officer (CEO), the chief financial officer (CFO), and the chief operating officer (COO). No individual director or combination of directors that is shared with a related manufacturer may exercise exclusive management control over either or both companies.

(vii) Parts or components supply agreements between the applicant and related companies must be established through open market processes. An applicant that sells or otherwise provides parts and/or vehicle components to a manufacturer that is not a related manufacturer must do so through the open market at competitive pricing rates.

(2) Manufacturers that have been granted operationally independent status must report any material changes to the information provided in the application within 60 days of the occurrence of the change. If such a change occurs that results in the manufacturer no longer meeting the requirements of the application, the manufacturer will lose the eligibility to be considered operationally independent. The EPA will confirm that the manufacturer no longer meets one or more of the criteria and thus is no longer considered operationally independent, and will notify the manufacturer of the change in status. A manufacturer who loses the eligibility for operationally independent status must transition to the appropriate emission standards no later than the third model year after the model year in which the loss of eligibility occurred. For example, a manufacturer that loses eligibility in their 2018 model year would be required to meet appropriate standards in the 2021

model year. A manufacturer that loses eligibility must meet the applicable criteria for three consecutive model years before they are allowed to apply for a reinstatement of their operationally independent status.

(3) The manufacturer applying for operational independence shall engage an independent certified public accountant, or firm of such accountants (hereinafter referred to as ''CPA''), to perform an agreed-upon procedures attestation engagement of the underlying documentation that forms the basis of the application as required in this paragraph (d).

(i) The CPA shall perform the attestation engagements in accordance with the Statements on Standards for Attestation Engagements established by the American Institute of Certified Public Accountants.

(ii) The CPA may complete the requirements of this paragraph with the assistance of internal auditors who are employees or agents of the applicant, so long as such assistance is in accordance with the Statements on Standards for Attestation Engagements established by the American Institute of Certified Public Accountants.

(iii) Notwithstanding the requirements of paragraph (d)(3)(ii) of this section, an applicant may satisfy the requirements of this paragraph (d)(3) if the requirements of this paragraph (d)(3) are completed by an auditor who is an employee of the applicant, provided that such employee:

(A) Is an internal auditor certified by the Institute of Internal Auditors, Inc. (hereinafter referred to as ''CIA''); and

(B) Completes the internal audits in accordance with the standards for internal auditing established by the Institute of Internal Auditors.

(iv) Use of a CPA or CIA who is debarred, suspended, or proposed for debarment pursuant to the Governmentwide Debarment and Suspension Regulations, 2 CFR part 1532, or the Debarment, Suspension, and Ineligibility Provisions of the Federal Acquisition Regulations, 48 CFR part 9, subpart 9.4, shall be deemed in noncompliance with the requirements of this section.

[64 FR 23925, May 4, 1999, as amended at 65 FR 6864, Feb. 10, 2000; 67 FR 72826, Dec. 6, 2002; 71 FR 2836, Jan. 17, 2006; 77 FR 63162, Oct. 15, 2012; 79 FR 23728, Apr. 28, 2014; 81 FR 73991, Oct. 25, 2016]

§ 86.1839–01 Carryover of certification data.

(a) In lieu of testing an emission-data or durability vehicle selected under § 86.1822–01, § 86.1828–01, or § 86.1829–01, and submitting data therefrom, a manufacturer may submit exhaust emission data, evaporative emission data and/or refueling emission data, as applicable, on a similar vehicle for which certification has been obtained or for which all applicable data required under § 86.1845–01 has previously been submitted. To be eligible for this provision, the manufacturer must use good engineering judgment and meet the following criteria:

(1) In the case of durability data, the manufacturer must determine that the previously generated durability data represent a worst case or equivalent rate of deterioration for all applicable emission constituents compared to the configuration selected for durability demonstration.

(i) Prior to certification, the Administrator may require the manufacturer to provide data showing that the distribution of catalyst temperatures of the selected durability configuration is effectively equivalent or lower than the distribution of catalyst temperatures of the vehicle configuration which is the source of the previously generated data.

(ii) For the 2001, 2002, and 2003 model years only, paragraph (a)(1) of this section does not apply to the use of exhaust emission deterioration factors meeting the requirements of § 86.1823–01(c)(2).

(2) In the case of emission data, the manufacturer must determine that the previously generated emissions data represent a worst case or equivalent level of emissions for all applicable emission constituents compared to the configuration selected for emission compliance demonstration.

(b) In lieu of using newly aged hardware on an EDV as allowed under the

provisions of § 86.1823–08(f)(2), a manufacturer may use similar hardware aged for an EDV previously submitted, provided that the manufacturer determines that the previously aged hardware represents a worst case or equivalent rate of deterioration for all applicable emission constituents for durability demonstration.

[64 FR 23925, May 4, 1999, as amended at 71 FR 2836, Jan. 17, 2006]

§ 86.1840–01 Special test procedures.

(a) The Administrator may, on the basis of written application by a manufacturer, prescribe test procedures, other than those set forth in this part, for any light-duty vehicle, light-duty truck, or complete heavy-duty vehicle which the Administrator determines is not susceptible to satisfactory testing by the procedures set forth in this part.

(b) If the manufacturer does not submit a written application for use of special test procedures but the Administrator determines that a light-duty vehicle, light-duty truck, or complete heavy-duty vehicle is not susceptible to satisfactory testing by the procedures set forth in this part, the Administrator shall notify the manufacturer in writing and set forth the reasons for such rejection in accordance with the provisions of § 86.1848(a)(2).

(c) Manufacturers of vehicles equipped with periodically regenerating aftertreatment devices must propose a procedure for testing and certifying such vehicles, including SFTP testing, for the review and approval of the Administrator. The manufacturer must submit its proposal before it begins any service accumulation or emission testing. The manufacturer must provide with its submittal sufficient documentation and data for the Administrator to fully evaluate the operation of the aftertreatment devices and the proposed certification and testing procedure.

(d) The provisions of paragraph (a) and (b) of this section also apply to MDPVs.

[65 FR 59976, Oct. 6, 2000, as amended at 71 FR 51488, Aug. 30, 2006; 77 FR 34146, June 8, 2012]

§ 86.1841–01 Compliance with emission standards for the purpose of certification.

(a) Certification levels of a test vehicle will be calculated for each emission constituent applicable to the test group for both full and intermediate useful life as appropriate.

(1) If the durability demonstration procedure used by the manufacturer under the provisions of § 86.1823, § 86.1824, or § 86.1825 requires a DF to be calculated, the DF shall be applied to the official test results determined in § 86.1835–01(c) for each regulated emission constituent and for full and intermediate useful life, as appropriate, using the following procedures:

(i) For additive DF's, the DF will be added to the emission result. The sum will be rounded to the same level of precision as the standard for the constituent at full and/or intermediate useful life, as appropriate. This rounded sum is the certification level for that emission constituent and for that useful life mileage.

(ii) For multiplicative DFs, the DF will be multiplied by the emission result for each regulated constituent. The product will be rounded to the same level of precision as the standard for the constituent at full and intermediate useful life, as appropriate. This rounded product is the certification level for that emission constituent and for that useful life mileage.

(iii) For the SFTP composite standard of NMHC + NO_X, the measured results of NMHC and NO_X must each be adjusted by their corresponding deterioration factors before the composite NMHC + NO_X certification level is calculated. Where the applicable FTP exhaust hydrocarbon emission standard is an NMOG standard, the applicable NMOG deterioration factor must be used in place of the NMHC deterioration factor, unless otherwise approved by the Administrator.

(2) If the durability demonstration procedure used by the manufacturer under the provisions of § 86.1823, § 86.1824, or § 86.1825, as applicable, requires testing of the EDV with aged emission components, the official results of that testing determined under the provisions of § 86.1835–01(c) shall be

rounded to the same level of precision as the standard for each regulated constituent at full and intermediate useful life, as appropriate. This rounded emission value is the certification level for that emission constituent at that useful life mileage.

(3) Compliance with full useful life CO_2 exhaust emission standards shall be demonstrated at certification by the certification levels on the FTP and HFET tests for carbon-related exhaust emissions determined according to § 600.113 of this chapter.

(4) The rounding required in paragraph (a) of this section shall be conducted in accordance with the provisions of § 86.1837–01.

(b) To be considered in compliance with the standards for the purposes of certification, the certification levels for the test vehicle calculated in paragraph (a) of this section shall be less than or equal to the standards for all emission constituents to which the test group is subject, at both full and intermediate useful life as appropriate for that test group.

(c) Every test vehicle of a test group must comply with all applicable exhaust emission standards before that test group may be certified.

(d) Every test vehicle of an evaporative/refueling family must comply with all applicable evaporative and/or refueling emission standards before that family may be certified.

(e) Unless otherwise approved by the Administrator, manufacturers must not use Reactivity Adjustment Factors (RAFs) in their calculation of the certification level of any pollutant for any vehicle except for LDVs and LLDTs participating in the National Low Emission Vehicle (NLEV) program described in subpart R of this part, regardless of the fuel used in the test vehicle.

[64 FR 23925, May 4, 1999, as amended at 65 FR 6864, Feb. 10, 2000; 66 FR 19310, Apr. 13, 2001; 71 FR 2836, Jan. 17, 2006; 75 FR 25690, May 7, 2010; 76 FR 39522, July 6, 2011]

§ 86.1842–01 Addition of a vehicle after certification; and changes to a vehicle covered by certification.

(a) *Addition of a car line after certification.* (1) If a manufacturer proposes to add to its product line a new car line of the same test group as vehicles previously certified but which was not described in the application for certification when the test vehicle(s) representing other vehicles of that combination was certified, it shall notify the Administrator. This notification shall include a full description of the vehicle to be added.

(2) The manufacturer shall perform such tests on the test vehicle(s) representing the vehicle to be added which would have been required if the vehicle had been included in the original application for certification.

(3) If, after a review of the test reports and data submitted by the manufacturer, and data derived from any testing conducted under § 86.1835–01, the Administrator determines that the test vehicle(s) or test engine(s) meets all applicable standards, the appropriate certificate will be amended accordingly. If the Administrator determines that the test vehicle(s) does not meet applicable standards, she/he will proceed under § 86.1850–01.

(b) *Changes to the configuration of vehicles covered by a Certificate of Conformity.* (1) A manufacturer will notify the Administrator concurrently with (or in advance of) any change or addition in production vehicles which creates a new vehicle configuration within the car lines covered in a certified test group, giving a full description of the change. Such a change is referred to as a running change. Upon notification, the manufacturer may begin production of the running change if the manufacturer determines that following the change all affected vehicles will still meet the applicable emission standards.

(i) Such notification shall include a full description of the addition or change and any supporting documentation the manufacturer may desire to include to support the manufacturer's determination in accordance with § 86.1844-01.

(ii) The manufacturer's determination that the addition or change does not cause noncompliance shall be based on an engineering evaluation of the addition or change and/or testing.

(2) The Administrator may require that additional emission testing be performed to support the manufacturer's

determination submitted in paragraph (b)(1) of this section. If additional testing is required the Administrator shall proceed in accordance with paragraph (a)(3) of this section. Additional test data, if requested, must be provided within 30 days of the request or the manufacturer must rescind the addition or change immediately. The Administrator may grant additional time to complete testing. If based on this additional testing or any other information, the Administrator determines that the vehicles affected by the addition or change do not meet the applicable standards the Administrator will notify the manufacturer to rescind the addition or change immediately upon receipt of the notification.

(c) Election to produce vehicles under this section will be deemed to be a consent to recall all vehicles which the Administrator determines under paragraph (a) or (b) of this section do not meet applicable standards, and to cause such nonconformity to be remedied at no expense to the owner.

§ 86.1843–01 General information requirements.

(a) A manufacturer must submit a separate Application for Certification (Application) for each durability group in a format approved by the Administrator and in multiple copies as designated by the Administrator. Any information within the Application which is unique to a specific test group must be submitted for each test group.

(b) Any manufacturer that fails to comply with any information requirements of §§ 86.1843–01 and 86.1844–01 may be subject to the following provisions:

(1) The Application (Part 1 and Part 2) and any additional information as designated by the Administrator shall be submitted for all durability groups prior to certification for subsequent model years, until otherwise notified by the Administrator. The Application shall be updated concurrently with every running change.

(2) Provisions of § 86.1850–01 may be imposed.

(3) Civil penalties and remedial action as applicable under the Clean Air Act may be imposed.

(c) *Part 1 of the Application*. Part 1, which shall include the items listed in § 86.1844–01(d), must be submitted to the Administrator before a certificate of conformity will be issued.

(d) *Part 2 of the Application*. Part 2, which shall include the items listed in § 86.1844–01(e), must be submitted to the Administrator by January 1st of the applicable model year. If a test group is certified less than 60 days prior to January 1st of the applicable model year, Part 2 must be submitted to the Administrator within 90 days of the effective date on the applicable certificate of conformity.

(e) *Running change submissions*. Each running change notification, as required under § 86.1842–01, must include the information listed in § 86.1844–01(f) and shall be submitted to the Administrator concurrently with, or in advance of, the implementation of any change incorporated onto production vehicles.

(f) *Updates to the Application for Certification*. (1) The manufacturer must submit an update to the Part 1 Application by January 1st of the applicable model year to incorporate any running changes and/or corrections which occurred after certification. If a test group is certified less than 60 days prior to January 1st of the applicable model year, this update may be submitted to the Administrator within 90 days of the effective date on the applicable certificate of conformity.

(2) The manufacturer must submit a final update to Part 1 and Part 2 of the Application by January 1st of the subsequent model year to incorporate any applicable running changes or corrections which occurred between January 1st of the applicable model year and the end of the model year. A manufacturer may request the Administrator to grant an extension (of no more than 90 days) for submittal of the final update. The request must clearly indicate the circumstances necessitating the extension.

(3) The manufacturer may not use updates to its application to correct a misbuild situation with respect to vehicles already introduced into commerce.

(g) *Recordkeeping*. (1) This subpart includes various requirements to record data or other information. Unless we specify otherwise, store these records in any format and on any media and

keep them readily available for eight years after you send an associated application for certification, or eight years after you generate the data if they do not support an application for certification. You must promptly send us organized, written records in English upon request. We may review them at any time.

(2) Upon written request by the Administrator, a manufacturer shall submit any information as described in § 86.1844–01 within 15 business days. A manufacturer may request the Administrator to grant an extension. The request must clearly indicate the circumstances necessitating the extension.

(h) *In-use information requirements*. All information requirements of the in-use verification and confirmatory programs of §§ 86.1845–01 and 86.1846–01 must be met by the due dates listed in § 86.1847–01.

[64 FR 23925, May 4, 1999, as amended at 79 FR 23729, Apr. 28, 2014]

§ 86.1844–01 Information requirements: Application for certification and submittal of information upon request.

(a) All the information listed in this section must be submitted to the Agency according to the requirements specified in § 86.1843; however, we may ask you to include less information than we specify, as long as you keep the specified records.

(b) Nothing in this section limits the Administrator's discretion to require the manufacturer to submit additional records not specifically required by this section.

(c) Routine emission test records shall be retained by the manufacturer for a period of one (1) year after issuance of all certificates of conformity to which they relate. All records, other than routine emission test records, required to be produced by the manufacturer under this title shall be made available upon written request by the Administrator for a period of eight years after issuance of all certificates of conformity to which they relate.

(d) *Part 1 Application*. Part 1 must contain the following items:

(1) Correspondence and communication information, such as names, mailing addresses, phone and fax numbers, and e-mail addresses of all manufacturer representatives authorized to be in contact with EPA compliance staff. The address where official documents, such as certificates of conformity, are to be mailed must be clearly identified. At least one U.S. contact must be provided.

(2) A description of the durability group in accordance with the criteria listed in § 86.1820–01, or as otherwise used to group a product line.

(3) A description of applicable evaporative/refueling families and leak families in accordance with the criteria listed in § 86.1821–01, or as otherwise used to group a product line.

(4) *Durability information*. (i) A description of the durability method used to establish useful life durability, including exhaust and evaporative/refueling emission deterioration factors as required in §§ 86.1823, 86.1824 and 86.1825 when applicable.

(ii) The equivalency factor required to be calculated in § 86.1823–08(e)(1)(iii)(B), when applicable.

(5) A description of each test group in accordance with the criteria listed in § 86.1827–01 or as otherwise used to group a product line.

(6) Identification and description of all vehicles for which testing is required by §§ 86.1822–01 and 86.1828–01 to obtain a certificate of conformity.

(7) A comprehensive list of all test results, including official certification levels, and the applicable intermediate and full useful life emission standards to which the test group is to be certified as required in § 86.1829. Include the following additional information related to testing:

(i) For vehicles certified to any Tier 3 emission standards, include a comparison of drive-cycle metrics as specified in 40 CFR 1066.425(j) for each drive cycle or test phase, as appropriate.

(ii) For gasoline-fueled Tier 3 vehicles, identify the method of accounting for ethanol in determining evaporative emissions, as described in § 86.1813.

(iii) Identify any aspects of testing for which the regulations obligate EPA testing to conform to your selection of test methods.

(iv) For heavy-duty vehicles subject to air conditioning standards under § 86.1819, include the refrigerant leakage rates (leak scores), describe the type of refrigerant, and identify the refrigerant capacity of the air conditioning systems. If another company will install the air conditioning system, also identify the corporate name of the final installer.

(8) A statement that all applicable vehicles will conform to the emission standards for which emission data is not being provided, as allowed under § 86.1806 or § 86.1829. The statement shall clearly identify the standards for which emission testing was not completed.

(9) Information describing each emission control diagnostic system required by § 86.1806, including all of the following:

(i) A description of the functional operation characteristics of the diagnostic system, with additional information demonstrating that the system meets the requirements specified in § 86.1806. Include all testing and demonstration data submitted to the California Air Resources Board for certification.

(ii) The general method of detecting malfunctions for each emission-related powertrain component.

(iii) Any deficiencies, including resolution plans and schedules.

(iv) A statement that the diagnostic system is adequate for the performance warranty test described in 40 CFR Part 85, subpart W.

(v) For vehicles certified to meet the leak standard in § 86.1813, a description of the anticipated test procedure. The description must include, at a minimum, a method for accessing the fuel system for measurements and a method for pressurizing the fuel system to perform the procedure specified in 40 CFR 1066.985. The recommended test method must include at least two separate points for accessing the fuel system, with additional access points as appropriate for multiple fuel tanks and multiple evaporative or refueling canisters.

(10) A description of all flexible or dedicated alternate fuel vehicles including, but not limited to, the fuel and/or percentage of alternate fuel for all such vehicles.

(11) A list of all auxiliary emission control devices (AECD) installed on any applicable vehicles, including a justification for each AECD, the parameters they sense and control, a detailed justification of each AECD that results in a reduction in effectiveness of the emission control system, and rationale for why it is not a defeat device as defined under § 86.1809. The following specific provisions apply for AECDs:

(i) For any AECD uniquely used at high altitudes, EPA may request engineering emission data to quantify any emission impact and validity of the AECD.

(ii) For any AECD uniquely used on multi-fuel vehicles when operated on fuels other than gasoline, EPA may request engineering emission data to quantify any emission impact and validity of the AECD.

(iii) For Tier 3 vehicles with spark-ignition engines, describe how AECDs are designed to comply with the requirements of § 86.1811–17(d). Identify which components need protection through enrichment strategies; describe the temperature limitations for those components; and describe how the enrichment strategy corresponds to those temperature limitations. We may also require manufacturers to submit this information for certification related to Tier 2 vehicles.

(12) Identification and description of all vehicles covered by each certificate of conformity to be produced and sold within the U.S. The description must be sufficient to identify whether any given in-use vehicle is, or is not, covered by a given certificate of conformity, the test group and the evaporative/refueling family to which it belongs and the standards that are applicable to it, by matching readily observable vehicle characteristics and information given in the emission control information label (and other permanently attached labels) to indicators in the Part 1 Application. In addition, the description must be sufficient to determine for each vehicle covered by the certificate, all appropriate test parameters and any special test procedures necessary to conduct an official certification exhaust or evaporative emission

test as was required by this subpart to demonstrate compliance with applicable emission standards. The description shall include, but is not limited to, information such as model name, vehicle classification (light-duty vehicle, light-duty truck, or complete heavy-duty vehicle), sales area, engine displacement, engine code, transmission type, tire size and parameters necessary to conduct exhaust emission tests such as equivalent test weight, curb and gross vehicle weight, test horsepower (with and without air conditioning adjustment), coast down time, shift schedules, cooling fan configuration, etc. and evaporative tests such as canister working capacity, canister bed volume and fuel temperature profile. The Part 1 may include ranges for test parameters in lieu of actual values.

(13) Projected U.S. vehicle sales volumes for each test group and evaporative/refueling family combination organized in such a way to determine projected compliance with any applicable implementation schedules or minimum sales requirements as specified in § 86.1810 or as otherwise required by this chapter.

(14) A request for a certificate of conformity for each test group after all required testing has been completed. The request must be signed by an authorized manufacturer representative and include a statement that the test group complies with all applicable regulations contained within this chapter.

(15)(i) For HEVs and EVs, describe the recharging procedures and methods for determining battery performance, such as state of charge and charging capacity.

(ii) For vehicles with fuel-fired heaters, include the information specified in this paragraph (d)(15)(ii). Describe the control system logic of the fuel-fired heater, including an evaluation of the conditions under which it can be operated and an evaluation of the possible operational modes and conditions under which evaporative emissions can exist. Use good engineering judgment to establish an estimated exhaust emission rate from the fuel-fired heater in grams per mile. Describe the testing used to establish the exhaust emission rate.

(16) (i) A statement indicating that the manufacturer has conducted an engineering analysis of the complete exhaust system to ensure that the exhaust system has been designed–

(A) To facilitate leak-free assembly, installation and operation for the full useful life of the vehicle; and

(B) To facilitate that such repairs as might be necessary on a properly maintained and used vehicle can be performed in such a manner as to maintain leak-free operation, using tools commonly available in a motor vehicle dealership or independent repair shop for the full useful life of the vehicle.

(ii) The analysis must cover the exhaust system and all related and attached components including the air injection system, if present, from the engine block manifold gasket surface to a point sufficiently past the last catalyst and oxygen sensor in the system to assure that leaks beyond that point will not permit air to reach the oxygen sensor or catalyst under normal operating conditions.

(iii) A ''leak-free'' system is one in which leakage is controlled so that it will not lead to a failure of the certification exhaust emission standards in-use.

(17) The name of an agent for service of process located in the United States. Service on this agent constitutes service on you or any of your officers or employees for any action by EPA or otherwise by the United States related to the requirements of this part.

(e) *Part 2 Application*. Part 2 must contain the following items:

(1) A list of part numbers of all emission-related components and AECDs for each emission control system, including those found on actual components. The part numbers shall be organized by engine code or other similar classification scheme.

(2) Basic calibration information, organized by engine code (or other similar classification scheme), for the major components of the fuel system, EGR system, ignition system, oxygen sensor(s) and thermostat. Examples of major components and associated calibration information include, but are not limited to; fuel pump and fuel pump flow rate, fuel pressure regulator and regulated fuel pressure, EGR valve

and EGR exhaust gas flow rate at specified vacuum levels, EGR vacuum regulator and regulated vacuum, EGR orifice and orifice diameter, basic engine timing, timing RPM, idle rpm, spark plug gap, oxygen sensor output (mV), and thermostat opening temperature.

(3) Identification and description of all vehicles covered by each certificate of conformity to be produced and sold within the U.S. The description must be sufficient to identify whether any given in-use vehicle is, or is not, covered by a given certificate of conformity, the test group and the evaporative/refueling family to which it belongs and the standards that are applicable to it, by matching readily observable vehicle characteristics and information given in the emission control information label (and other permanently attached labels) to indicators in the Part 1 Application. In addition, the description must be sufficient to determine for each vehicle covered by the certificate, all appropriate test parameters and any special test procedures necessary to conduct an official certification exhaust or evaporative emission test as was required by this subpart to demonstrate compliance with applicable emission standards. The description shall include, but is not limited to, information such as model name, vehicle classification (light-duty vehicle, light-duty truck, or complete heavy-duty vehicle), sales area, engine displacement, engine code, transmission type, tire size and parameters necessary to conduct exhaust emission tests such as equivalent test weight, curb and gross vehicle weight, test horsepower (with and without air conditioning adjustment), coast down time, shift schedules, cooling fan configuration, etc and evaporative tests such as canister working capacity, canister bed volume and fuel temperature profile. Actual values must be provided for all parameters.

(4) Final U.S. vehicle sales volumes for each test group and evaporative/refueling family combination organized in such a way to verify compliance with any applicable implementation schedules. Final sales are not required until the final update to the Part 2 Application at the end of the model year.

(i) The manufacturer may petition the Administrator to allow actual volume produced for U.S. sale to be used in lieu of actual U.S. sales. The petition must establish that production volume is functionally equivalent to sales volume.

(ii) The U.S. sales volume shall be based on the location of the point of sale to a dealer, distributor, fleet operator, broker, or any other entity which comprises the point of first sale.

(5) Copies of all service manuals, service bulletins and instructions regarding the use, repair, adjustment, maintenance, or testing of such vehicles relevant to the control of crankcase, exhaust or evaporative emissions, as applicable, issued by the manufacturer (in written or electronic form) for use by other manufacturers, assembly plants, distributors, dealers, and ultimate purchasers. These shall be submitted to the Agency when they are made available to the public and must be updated as appropriate throughout the useful life of the corresponding vehicles.

(6) The NMOG/NMHC and HCHO to NMHC ratios established according to § 86.1845–04.

(7) The results of any production vehicle evaluation testing required for OBD systems under § 86.1806.

(f) Running change submissions. A manufacturer shall submit to the Administrator a notification of all running changes as required in accordance with §§ 86.1842–01 and 86.1843–01 at the time each change is incorporated into production. Each running change notification shall include:

(1) A detailed description of the change;

(2) The reason for the change;

(3) The portion of the product line that is affected by the change, including information sufficient to identify whether any given in-use vehicle includes the change;

(4) The effect the change will have on emissions;

(5) Any test data that is determined to be necessary to demonstrate compliance with applicable emission standards; and

(6) A summary report for each test group which provides an overview of all

running changes that have been incorporated since certification.

(g) The manufacturer shall provide the following information, or other information as deemed necessary by the Administrator, to the Agency upon written request by the Administrator. This includes any information, or explanations of such information specified in paragraphs (d), (e), and (f) of this section.

(1) A detailed description of the basis for all good engineering judgment decisions that were required to be made by the manufacturer. These include, but are not limited to, placement of vehicles into durability and test groups, the appropriateness of a durability process for future model years, worst-case vehicle selections for durability and emission data purposes, and carry-over or carry-across of emission test data.

(2) The basis used for all compliance statements submitted under this section. Each statement must be supported by the manufacturer using good engineering judgment and should include any emission test data, development test data, or other supporting information deemed necessary. This includes information necessary to demonstrate compliance with any emission standards for which a compliance statement was submitted in lieu of actual emission test data as allowed under § 86.1810.

(3) Detailed technical descriptions of emission-related components and AECDs, including schematic diagrams and hose and wire routings which describe the fundamental operating characteristics of each emission control system.

(4) Detailed calibration specifications for all emission-related components and AECDs.

(5) Any information necessary to demonstrate that no defeat devices are present on any vehicles covered by a certificate including, but not limited to, a description of the technology employed to control CO emissions at intermediate temperatures, as applicable.

(6) The following information describing any adjustable parameters:

(i) A list of those parameters which are physically capable of being adjusted (including those adjustable parameters for which access is difficult) and that, if adjusted to settings other than the manufacturer's recommended setting, may affect emissions;

(ii) A specification of the manufacturer's intended physically adjustable range of each such parameter, and the production tolerances of the limits or stops used to establish the physically adjustable range;

(iii) A description of the limits or stops used to establish the manufacturer's intended physically adjustable range of each adjustable parameter, or any other means used to inhibit adjustment;

(iv) The nominal or recommended setting, and the associated production tolerances, for each such parameter;

(v) The specifications used during all emission testing required by this subpart.

(7) A history of each motor vehicle used for certification testing, including a general description of the buildup of the vehicle and engine. Each history shall begin when any of the selection or buildup activities occur and should include details of the use of the vehicle for development testing. Each history must include a description of the origin and selection process for fuel system components, fuel injection components and emission control system components and specify the steps taken to assure that the certification vehicle will be representative of production vehicles.

(8) A record of all emission tests performed on all durability and emission data vehicles required to be tested by this subpart including test results, the date and purpose of each test, and the number of miles accumulated on the vehicle.

(9) A record and description of any significant events (including extraordinary events such as vehicle accidents or dynamometer runaway) affecting any certification test vehicle, including all maintenance, servicing or tests performed to diagnose engine or emission control system performance. The date and time of each event and an explanation must be included.

(10) For vehicles with non-integrated refueling emission control systems, a description of the drivedown used to

purge the refueling canister and a description of the procedures used to determine the number of equivalent UDDS cycles required to purge the refueling canisters, as determined from the fuel economy on the UDDS applicable to the test vehicle of that evaporative/refueling family and emission control system combination required to use a volume of fuel equal to 85% of fuel tank volume and from subpart B of this part.

(11) A description of all procedures, including any special procedures, used to comply with applicable test requirements of this subpart. Any special procedures used to establish durability data or emission deterioration factors required to be determined under §§ 86.1823–01, 86.1824–01 and 86.1825–01 and to conduct emission tests required to be performed on applicable emission data vehicles under § 86.1829–01 according to test procedures contained within this Title must also be included.

(12) A description of any unique procedures required to perform evaporative/refueling emission tests for all vehicles in each evaporative/refueling family and a description of the method used to develop those unique procedures, including canister working capacity, canister bed volume and fuel temperature profile for the running loss test.

(13) A description of the method to be used to decode vehicle identification numbers.

(14) For complete heavy-duty vehicles only, all hardware (including scan tools) and documentation necessary for EPA to read, interpret, and store (in engineering units if applicable) any information broadcast by an engine's on-board computers and electronic control modules which relates in anyway to emission control devices and auxiliary emission control devices, provided that such hardware, passwords, or documentation exists and is not otherwise commercially available. Passwords include any information necessary to enable generic scan tools or personal computers access to proprietary emission related information broadcast by an engine's on-board computer, if such passwords exist. This requirement includes access by EPA to any proprietary code information which may be broadcast by an engine's on-board computer and electronic control modules. Information which is confidential business information must be marked as such. Engineering units refers to the ability to read, interpret, and store information in commonly understood engineering units, for example, engine speed in revolutions per minute or per second, injection timing parameters such as start of injection in degree's before top-dead center, fueling rates in cubic centimeters per stroke, vehicle speed in milers per hour or per kilometer.

(h) *In-use information requirements.* Manufacturers must submit the information required in § 86.1847–01.

(i) For exhaust emission testing for Tier 2 and interim non-Tier 2 vehicles, if approved by the Administrator in advance, manufacturers may submit exhaust emission test data generated under California test procedures to comply with any certification and in-use testing requirements under this subpart. The Administrator may require supporting information to establish that differences between California and Federal exhaust testing procedures and fuels will not produce significant differences in emission results. The Administrator may require that in-use testing be performed using Federal test fuels as specified in § 86.113–04(a)(1).

[64 FR 23925, May 4, 1999, as amended at 65 FR 6865, Feb. 10, 2000; 65 FR 59976, Oct. 6, 2000; 71 FR 2837, Jan. 17, 2006; 71 FR 51489, Aug. 30, 2006; 72 FR 8566, Feb. 26, 2007; 75 FR 66457, Oct. 28, 2010; 76 FR 57378, Sept. 15, 2011; 78 FR 36388, June 17, 2013; 79 FR 23730, Apr. 28, 2014; 80 FR 9109, Feb. 19, 2015; 81 FR 73991, Oct. 25, 2016]

§ 86.1845–04 Manufacturer in-use verification testing requirements.

(a) *General requirements.* (1) Manufacturers of LDV, LDT, MDPV and complete HDV must test, or cause to have tested, a specified number of vehicles. Such testing must be conducted in accordance with the provisions of this section.

(2) Unless otherwise approved by the Administrator, no emission measurements made under the requirements of this section may be adjusted by Reactivity Adjustment Factors (RAFs).

(3) The following provisions apply regarding the possibility of residual effects from varying fuel sulfur levels:

(i) Vehicles certified to Tier 3 standards under § 86.1811 must always measure emissions over the FTP, then over the HFET (if applicable), then over the US06 portion of the SFTP. If a Tier 3 vehicle meets all the applicable emission standards except the FTP or HFET emission standard for NMOG + NO_X, and a fuel sample from the tested vehicle (representing the as-received condition) has a measured fuel sulfur level exceeding 15 ppm when measured as described in 40 CFR 1065.710, the manufacturer may repeat the FTP and HFET measurements and use the new emission values as the official results for that vehicle. For all other cases of testing Tier 3 vehicles, measured emission levels from the first test will be considered the official results for the test vehicle, regardless of any test results from additional test runs. Where repeat testing is allowed, the vehicle may operate for up to two US06 cycles (with or without measurement) before repeating the FTP and HFET measurements. The repeat measurements must include both FTP and HFET, even if the vehicle failed only one of those tests, unless the HFET is not required for a particular vehicle. Tier 3 vehicles may not undergo any other vehicle preconditioning to eliminate fuel sulfur effects on the emission control system, unless we approve it in advance.

(ii) Upon a manufacturer's written request, prior to in-use testing, that presents information to EPA regarding pre-conditioning procedures designed solely to remove the effects of high sulfur in gasoline from vehicles produced through the 2007 model year, EPA will consider allowing such procedures on a case-by-case basis. EPA's decision will apply to manufacturer in-use testing conducted under this section and to any in-use testing conducted by EPA. Such procedures are not available for complete HDV. For model year 2007 and later Tier 2 vehicles, this provision can be used only in American Samoa, Guam, and the Commonwealth of the Northern Mariana Islands, and then only if low sulfur gasoline is determined by the Administrator to be unavailable in that specific location.

(b) *Low-mileage testing*—(1) *Test groups*. Testing must be conducted for each test group.

(2) *Vehicle mileage*. All test vehicles must have a minimum odometer mileage of 10,000 miles.

(3) *Number of test vehicles*. For each test group, the minimum number of vehicles that must be tested is specified in Table S04–06 and Table S04–07 of this paragraph (b)(3). After testing the minimum number of vehicles of a specific test group as specified in Table S04–06 or S04–07 of this paragraph (b)(3), a manufacturer may test additional vehicles upon request and approval by the Agency prior to the initiation of the additional testing. Any additional testing must be completed within the testing completion requirements shown in § 86.1845–04(b)(4). The request and Agency approval (if any) shall apply to test groups on a case by case basis and apply only to testing under this paragraph. Separate approval will be required to test additional vehicles under paragraph (c) of this section. In addition to any testing that is required under Table S04–06 and Table S04–07, a manufacturer shall test one vehicle from each evaporative/refueling family for evaporative/refueling emissions. If a manufacturer believes it is unable to procure the test vehicles necessary to test the required number of vehicles in a test group, the manufacturer may request, subject to Administrator approval, a decreased sample size for that test group. The request shall include a description of the methods the manufacturer has used to procure the required number of vehicles. The approval of any such request, and the substitution of an alternative sample size requirement for the test group, will be based on a review of the procurement efforts made by the manufacturer to determine if all reasonable steps have been taken to procure the required test group size. Tables S04–06 and S04–07 follow:

TABLE S04–06—SMALL VOLUME MANUFACTURERS

49 and 50 State total sales [1]	1–5000	5001–14,999
Low Mileage	Voluntary	0
High Mileage	Voluntary	2

[1] Manufacturer's total annual sales.

TABLE S04–07—LARGE VOLUME MANUFACTURERS

49 and 50 State annual sales [1]	1–5000 [2]	5001–14,999 [2]	1–50,000 [3]	50,001–250,000	>250,000
Low Mileage	Voluntary	0	2	3	4
High Mileage	Voluntary	2	4	5	6

[1] Sales by test group.
[2] Total annual production of groups eligible for testing under small volume sampling plan is capped at a maximum of 14,999 vehicle 49 or 50 state annual sales, or a maximum of 4,500 vehicle California only sales per model year, per large volume manufacturer.
[3] Sampling plan applies to all of a manufacturer's remaining groups in this sales volume category when the maximum annual cap on total sales of small groups eligible for the small volume sampling plan is exceeded.

(4) *Completion of testing*. Testing of the vehicles in a test group and evaporative/refueling family must be completed within 12 months of the end of production of that test group (or evaporative/refueling family) for that model year.

(5) *Testing*. (i) Each test vehicle of a test group shall be tested in accordance with the FTP and the US06 portion of the SFTP as described in subpart B of this part, when such test vehicle is tested for compliance with applicable exhaust emission standards under this subpart. Test vehicles subject to applicable exhaust CO_2 emission standards under this subpart shall also be tested in accordance with the HFET as described in 40 CFR 1066.840.

(ii) For vehicles subject to Tier 3 PM standards, manufacturers must measure PM emissions over the FTP and US06 driving schedules for at least 50 percent of the vehicles tested under paragraph (b)(5)(i) of this section.

(iii) Starting with model year 2018 vehicles, manufacturers must demonstrate compliance with the Tier 3 leak standard specified in § 86.1813, if applicable, as described in this paragraph (b)(5)(iii). Manufacturers must evaluate each vehicle tested under paragraph (b)(5)(i) of this section, except that leak testing is not required for vehicles tested under paragraph (b)(5)(iv) of this section for diurnal emissions. In addition, manufacturers must evaluate at least one vehicle from each leak family for a given model year. Manufacturers may rely on OBD monitoring instead of testing as follows:

(A) A vehicle is considered to pass the leak test if the OBD system completed a leak check within the previous 750 miles of driving without showing a leak fault code.

(B) Whether or not a vehicle's OBD system has completed a leak check within the previous 750 miles of driving, the manufacturer may operate the vehicle as needed to force the OBD system to perform a leak check. If the OBD leak check does not show a leak fault, the vehicle is considered to pass the leak test.

(C) If the most recent OBD leak check from paragraph (b)(5)(iii)(A) or (B) of this section shows a leak-related fault code as specified in § 86.1806–17(b), the vehicle is presumed to have failed the leak test. Manufacturers may perform the leak measurement procedure described in 40 CFR 1066.985 for an official result to replace the finding from the OBD leak check.

(D) Manufacturers may not perform repeat OBD checks or leak measurements to over-ride a failure under paragraph (b)(5)(iii)(C) of this section.

(iv) For nongaseous-fueled vehicles, one test vehicle of each evaporative/refueling family shall be tested in accordance with the supplemental 2-diurnal-plus-hot-soak evaporative emission and refueling emission procedures described in subpart B of this part, when such test vehicle is tested for compliance with applicable evaporative emission and refueling standards under this

subpart. For gaseous-fueled vehicles, one test vehicle of each evaporative/refueling family shall be tested in accordance with the 3-diurnal-plus-hot-soak evaporative emission and refueling emission procedures described in subpart B of this part, when such test vehicle is tested for compliance with applicable evaporative emission and refueling standards under this subpart. The test vehicles tested to fulfill the evaporative/refueling testing requirement of this paragraph (b)(5)(iv) will be counted when determining compliance with the minimum number of vehicles as specified in Table S04–06 and Table S04–07 in paragraph (b)(3) of this section for testing under paragraph (b)(5)(i) of this section only if the vehicle is also tested for exhaust emissions under the requirements of paragraph (b)(5)(i) of this section.

(6) Each test vehicle not rejected based on the criteria specified in appendix II to this subpart shall be tested in as-received condition.

(7) A manufacturer may conduct subsequent diagnostic maintenance and/or testing of any vehicle. Any such maintenance and/or testing shall be reported to the Agency as specified in § 86.1847.

(c) *High-mileage testing*—(1) *Test groups*. Testing must be conducted for each test group.

(2) *Vehicle mileage*. All test vehicles must have a minimum odometer mileage of 50,000 miles. At least one vehicle of each test group must have a minimum odometer mileage of 105,000 miles or 75 percent of the full useful life mileage, whichever is less. See § 86.1838–01(c)(2) for small-volume manufacturer mileage requirements.

(3) *Number of test vehicles*. For each test group, the minimum number of vehicles that must be tested is specified in Table S04–06 and Table S04–07 in paragraph (b)(3) of this section. After testing the minimum number of vehicles of a specific test group as specified in Table S04–06 and Table S04–07 in paragraph (b)(3) of this section, a manufacturer may test additional vehicles upon request and approval by the Agency prior to the initiation of the additional testing. Any additional testing must be completed within the testing completion requirements shown in § 86.1845–04(c)(4). The request and Agency approval (if any) shall apply to test groups on a case by case basis and apply only to testing under this paragraph (c). In addition to any testing that is required under Table S04–06 and Table S04–07, a manufacturer shall test one vehicle from each evaporative/refueling family for evaporative/refueling emissions. If a manufacturer believes it is unable to procure the test vehicles necessary to test the required number of vehicles in a test group as specified in Table S04–06 or Table S04–07, the manufacturer may request, subject to Administrator approval, a decreased sample size for that test group. The request shall include a description of the methods the manufacturer has used to procure the required number of vehicles. The approval of any such request, and the substitution of an alternative sample size requirement for the test group, will be based on a review of the procurement efforts made by the manufacturer to determine if all reasonable steps have been taken to procure the required test group size.

(4) *Initiation and completion of testing*. Testing of a test group (or evaporative refueling family) must commence within 4 years of the end of production of the test group (or evaporative/refueling family) and be completed within 5 years of the end of production of the test group (or evaporative/refueling family).

(5) *Testing*. (i) Each test vehicle shall be tested in accordance with the FTP and the US06 portion of the SFTP as described in subpart B of this part when such test vehicle is tested for compliance with applicable exhaust emission standards under this subpart. Test vehicles subject to applicable exhaust CO_2 emission standards under this subpart shall also be tested in accordance with the HFET as described in 40 CFR 1066.840. One test vehicle from each test group shall be tested over the FTP at high altitude. The test vehicle tested at high altitude is not required to be one of the same test vehicles tested at low altitude. The test vehicle tested at high altitude is counted when determining the compliance with the requirements shown in Table S04–06 and Table S04–07 in paragraph (b)(3) of this section or the expanded

sample size as provided for in this paragraph (c).

(ii) For vehicles subject to Tier 3 PM standards, manufacturers must measure PM emissions over the FTP and US06 driving schedules for at least 50 percent of the vehicles tested under paragraph (c)(5)(i) of this section.

(iii) Starting with model year 2018 vehicles, manufacturers must evaluate each vehicle tested under paragraph (c)(5)(i) of this section to demonstrate compliance with the Tier 3 leak standard specified in § 86.1813, except that leak testing is not required for vehicles tested under paragraph (c)(5)(iv) of this section for diurnal emissions. In addition, manufacturers must evaluate at least one vehicle from each leak family for a given model year. Manufacturers may rely on OBD monitoring instead of testing as described in paragraph (b)(5)(iii) of this section.

(iv) For nongaseous-fueled vehicles, one test vehicle of each evaporative/refueling family shall be tested in accordance with the supplemental 2-diurnal-plus-hot-soak evaporative emission procedures described in subpart B of this part, when such test vehicle is tested for compliance with applicable evaporative emission and refueling standards under this subpart. For gaseous-fueled vehicles, one test vehicle of each evaporative/refueling family shall be tested in accordance with the 3-diurnal-plus-hot-soak evaporative emission procedures described in subpart B of this part, when such test vehicle is tested for compliance with applicable evaporative emission and refueling standards under this subpart. The vehicles tested to fulfill the evaporative/refueling testing requirement of this paragraph (c)(5)(iv) will be counted when determining compliance with the minimum number of vehicles as specified in Table S04–06 and table S04–07 in paragraph (b)(3) of this section for testing under paragraph (c)(5)(i) of this section only if the vehicle is also tested for exhaust emissions under the requirements of paragraph (c)(5)(i) of this section.

(6) *Test condition.* Each test vehicle not rejected based on the criteria specified in appendix II to this subpart shall be tested in as-received condition.

(7) *Diagnostic maintenance.* A manufacturer may conduct subsequent diagnostic maintenance and/or testing on any vehicle. Any such maintenance and/or testing shall be reported to the Agency as specified in § 86.1847–01.

(d) *Test vehicle procurement.* (1) Vehicles tested under this section shall be procured pursuant to the provisions of this paragraph (d). Vehicles shall be procured from the group of persons who own or lease vehicles registered in the procurement area.

(2) Vehicles shall be procured from persons which own or lease the vehicle, excluding commercial owners/lessees which are owned or controlled by the vehicle manufacturer, using the procedures described in appendix I to this subpart. See § 86.1838(c)(2)(i) for small volume manufacturer requirements.

(3) *Geographical limitations.* (i) Test groups certified to 50-state standards: For low altitude testing no more than fifty percent of the test vehicles may be procured from California. The test vehicles procured from the 49 state area must be procured from a location with a heating degree day 30 year annual average equal to or greater than 4000.

(ii) Test groups certified to 49 state standards: The test vehicles procured from the 49 state area must be procured from a location with a heating degree day 30 year annual average equal to or greater than 4000.

(iii) Vehicles procured for high altitude testing may be procured from any area located above 4000 feet.

(4) Vehicles may be rejected for procurement or testing under this section if they meet one or more of the rejection criteria in appendix II to this subpart. Vehicles may also be rejected after testing under this section if they meet one or more of the rejection criteria in appendix II to this subpart. Any vehicle rejected after testing must be replaced in order that the number of test vehicles in the sample comply with the sample size requirements of this section. Any post-test vehicle rejection and replacement procurement and testing must take place within the testing completion requirements of this section.

(e) *Testing facilities, procedures, quality assurance and quality control*—(1) *Lab*

equipment and procedural requirements. The manufacturer shall utilize a test laboratory that is in accordance with the equipment and procedural requirements of subpart B of this part to conduct the testing required by this section.

(2) The manufacturer shall notify the Agency of the name and location of the testing laboratory(s) to be used to conduct testing of vehicles of each model year conducted pursuant to this section. Such notification shall occur at least thirty working days prior to the initiation of testing of the vehicles of that model year.

(3) *Correlation.* The manufacturer shall document correlation traceable to the Environmental Protection Agency's National Vehicle and Fuel Emission Laboratory for its test laboratory utilized to conduct the testing required by this section.

(f)(1) A manufacturer must conduct in-use testing on a test group by determining NMOG exhaust emissions using the same methodology used for certification, as described in § 86.1810–01(o) or 40 CFR 1066.635.

(2) For flexible-fueled vehicles certified to NMOG (or NMOG + NO_X) standards, the manufacturer may ask for EPA approval to demonstrate compliance using an equivalent NMOG emission result calculated from a ratio of ethanol NMOG exhaust emissions to gasoline NMHC exhaust emissions. Ethanol NMOG exhaust emissions are measured values from testing with the ethanol test fuel, expressed as NMOG. Gasoline NMHC exhaust emissions are measured values from testing with the gasoline test fuel, expressed as NMHC. This ratio must be established during certification for each emission-data vehicle for the applicable test group. Use good engineering judgment to establish a different ratio for each duty cycle or test interval as appropriate. Identify the ratio values you develop under this paragraph (f)(2) and describe the duty cycle or test interval to which they apply in the Part II application for certification. Calculate the equivalent NMOG emission result by multiplying the measured gasoline NMHC exhaust emissions for a given duty cycle or test interval by the appropriate ratio.

(3) If the manufacturer measures NMOG as described in 40 CFR 1066.635(a), it must also measure and report HCHO emissions. As an alternative to measuring the HCHO content, if the manufacturer measures NMOG as permitted in 40 CFR 1066.635(c), the Administrator may approve, upon submission of supporting data by a manufacturer, the use of HCHO to NMHC ratios. To request the use of HCHO to NMHC ratios, the manufacturer must establish during certification testing the ratio of measured HCHO exhaust emissions to measured NMHC exhaust emissions for each emission-data vehicle for the applicable test group. The results must be submitted to the Administrator with the Part II application for certification. Following approval of the application for certification, the manufacturer may conduct in-use testing on the test group by measuring NMHC exhaust emissions rather than HCHO exhaust emissions. The measured NMHC exhaust emissions must be multiplied by the HCHO to NMHC ratio submitted in the application for certification for the test group to determine the equivalent HCHO exhaust emission values for the test vehicle. The equivalent HCHO exhaust emission values must be compared to the HCHO exhaust emission standard applicable to the test group.

[64 FR 23925, May 4, 1999, as amended at 65 FR 6865, Feb. 10, 2000; 65 FR 59977, Oct. 6, 2000; 66 FR 19310, Apr. 13, 2001; 70 FR 72929, Dec. 8, 2005; 71 FR 78094, Dec. 28, 2006; 75 FR 25690, May 7, 2010; 79 FR 23730, Apr. 28, 2014; 80 FR 9109, Feb. 19, 2015; 81 FR 73991, Oct. 25, 2016]

§ 86.1846–01 Manufacturer in-use confirmatory testing requirements.

(a) *General requirements.* (1) Manufacturers must test, or cause testing to be conducted, under this section when the emission levels shown by a test group sample from testing under § 86.1845 exceeds the criteria specified in paragraph (b) of this section. The testing required under this section applies separately to each test group and at each test point (low and high mileage) that meets the specified criteria. The testing requirements apply separately for each model year. These provisions apply to heavy-duty vehicles starting with model year 2007. These provisions

do not apply to emissions of CO_2, CH_4, and N_2O.

(2) The provisions of § 86.1845–04(a)(3) regarding fuel sulfur effects apply equally to testing under this section.

(b) *Criteria for additional testing.* (1) A manufacturer shall test a test group or a subset of a test group as described in paragraph (j) of this section when the results from testing conducted under § 86.1845 show mean exhaust emissions for that test group of any pollutant(s) (except CO_2, CH_4, and N_2O) to be equal to or greater than 1.30 times the applicable in-use standard and a failure rate, among the test group vehicles, for the corresponding pollutant(s) of fifty percent or greater.

(i) Additional testing is not required under this paragraph (b)(1) based on evaporative/refueling testing or based on low-mileage Supplemental FTP testing conducted under § 86.1845–04(b)(5)(i). Testing conducted at high altitude under the requirements of § 86.1845–04(c) will be included in determining if a test group meets the criteria triggering the testing required under this section.

(ii) The vehicle designated for testing under the requirements of § 86.1845–04(c)(2) with a minimum odometer reading of 105,000 miles or 75% of useful life, whichever is less, will not be included in determining if a test group meets the triggering criteria.

(iii) The SFTP composite emission levels shall include the IUVP FTP emissions, the IUVP US06 emissions, and the values from the SC03 Air Conditioning EDV certification test (without DFs applied). The calculations shall be made using the equations prescribed in § 86.164. If more than one set of certification SC03 data exists (due to running change testing or other reasons), the manufacturer shall choose the SC03 result to use in the calculation from among those data sets using good engineering judgment.

(2) If fewer than 50 percent of the vehicles from a leak family pass either the leak test or the diurnal test under § 86.1845, EPA may require further leak testing under this paragraph (b)(2). Testing under this section must include five vehicles from the family. If all five of these vehicles fail the test, the manufacturer must test five additional vehicles.

EPA will determine whether to require further leak testing under this section after providing the manufacturer an opportunity to discuss the results, including consideration of any of the following information, or other items that may be relevant:

(i) Detailed system design, calibration, and operating information, technical explanations as to why the individual vehicles tested failed the leak standard.

(ii) Comparison of the subject vehicles to other similar models from the same manufacturer.

(iii) Data or other information on owner complaints, technical service bulletins, service campaigns, special policy warranty programs, warranty repair data, state I/M data, and data available from other manufacturer-specific programs or initiatives.

(iv) Evaporative emission test data on any individual vehicles that did not pass leak testing during IUVP.

(c) *Useful life.* Vehicles tested under the provisions of this section must be within the useful life specified for the emission standards which were exceeded in the testing under § 86.1845. Testing should be within the useful life specified, subject to sections 207(c)(5) and (c)(6) of the Clean Air Act where applicable.

(d) *Number of test vehicles.* A manufacturer must test a minimum of ten vehicles of the test group or Agency-designated subset. A manufacturer may, at the manufacturer's discretion, test more than ten vehicles under this paragraph for a specific test group or Agency-designated subset. If a manufacturer chooses to test more than the required ten vehicles, all testing must be completed within the time designated in the testing completion requirements of paragraph (g) of this section. Any vehicles which are eliminated from the sample either prior to or subsequent to testing, or any vehicles for which test results are determined to be void, must be replaced in order that the final sample of vehicles for which test results acceptable to the Agency are available equals a minimum of ten vehicles. A manufacturer may cease testing with a sample of five vehicles if the results of

the first five vehicles tested show mean emissions for each pollutant to be less than 75.0 percent of the applicable standard, with no vehicles exceeding the applicable standard for any pollutant.

(e) *Emission testing*. Each test vehicle of a test group or Agency-designated subset shall be tested in accordance with the FTP and/or the SFTP (whichever of these tests performed under § 86.1845 produces emission levels requiring testing under this section) as described in subpart B of this part, when such test vehicle is tested for compliance with applicable exhaust emission standards under this subpart.

(f) *Geographical limitations*. (1) Test groups or Agency-designated subsets certified to 50-state standards: For low altitude testing no more than 50 percent of the test vehicles may be procured from California. The test vehicles procured from the 49 state area must be procured from a location with a heating degree day 30 year annual average equal to or greater than 4000.

(2) Test groups or Agency-designated subsets certified to 49 state standards: For low-altitude testing all vehicles shall be procured from a location with a heating degree day 30 year annual average equal to or greater than 4000.

(3) Vehicles procured for high altitude testing may be procured from any area provided that the vehicle's primary area of operation was above 4000 feet.

(g) *Testing*. Testing required under this section must commence within three months of completion of the testing under § 86.1845 which triggered the confirmatory testing and must be completed within seven months of the completion of the testing which triggered the confirmatory testing. Any industry review of the results obtained under § 86.1845 and any additional vehicle procurement and/or testing which takes place under the provisions of § 86.1845 which the industry believes may affect the triggering of required confirmatory testing must take place within the three month period. The data and the manufacturers reasoning for reconsideration of the data must be provided to the Agency within the three month period.

(h) *Limit on manufacturer conducted testing*. For each manufacturer, the maximum number of test group(s) (or Agency-designated subset(s)) of each model year for which testing under this section shall be required is limited to 50 percent of the total number of test groups of each model year required to be tested by each manufacturer as prescribed in § 86.1845, rounded to the next highest whole number where appropriate. For each manufacturer with only one test group under § 86.1845, such manufacturer shall have a maximum potential testing requirement under this section of one test group (or Agency-designated subset) per model year.

(i) *Testing plan*. Prior to beginning in-use confirmatory testing the manufacturer must, after consultation with the Agency, submit a written plan describing the details of the vehicle procurement, maintenance, and testing procedures (not otherwise specified by regulation) it intends to use. EPA must approve the test plan before the manufacturer may start further testing.

(j) *Testing a subset*. EPA may designate a subset of the test group based on transmission type for testing under this section in lieu of testing the entire test group when the results for the entire test group from testing conducted under § 86.1845 show mean emissions and a failure rate which meet these criteria for additional testing.

[79 FR 23732, Apr. 28, 2014, as amended at 80 FR 9110, Feb. 19, 2015; 81 FR 73991, Oct. 25, 2016]

§ 86.1847–01 Manufacturer in-use verification and in-use confirmatory testing; submittal of information and maintenance of records.

(a) The manufacturer who conducts or causes to be conducted testing of any motor vehicle under § 86.1845–01 shall establish, maintain and retain the following records organized and indexed by test group and evaporative/refueling family:

(1) A record documenting correlation as prescribed by § 86.1845–01(e)(3).

(2) A description of all laboratory equipment calibrations and verifications as prescribed by subpart B of this part or otherwise as appropriate using good engineering judgment.

(3) *Procurement documentation.* A description of the procurement area, a record of the source(s) of any list(s) of vehicles used as a basis for procurement, and a complete record of the number of vehicles rejected after positive vehicle owner response and reason(s) for manufacturer rejection of each rejected vehicle. A complete record of the number of vehicle owners/lessees in which attempt to contact was made and the number of vehicle owners/lessees actually contacted, the number of owners/lessees not contacted and the reasons and number of each for failure to contact, and the number of owners contacted who declined to participate.

(4) All records required to be maintained under this paragraph shall be retained by the manufacturer for a period of eight (8) years after the end of production of the test group to which they relate.

(b) The manufacturer who conducts or causes to be conducted testing of any motor vehicle under § 86.1845–01 shall submit to the Administrator on a quarterly calendar year basis, with the information provided to the Administrator within 30 days of the end of the quarter of each calendar year, the following records organized by test group and evaporative/refueling family.

(1) A complete record of all emission tests performed, including tests results, the date of each test, and the phase mass values for fuel economy, carbon dioxide and each pollutant measured by the Federal Test Procedure and Supplemental Federal Test Procedure as prescribed by subpart B of this part.

(2) For each test vehicle within a test group, a record and description of procedures and test results pertaining to any inspection (including the information listed in appendix III to this subpart), diagnostics, and maintenance performed on the test vehicle prior to testing in as-received condition.

(3) A record and description of any inspection, diagnostics, and maintenance performed and/or testing (including emission results) of any vehicle tested subsequent to its initial as-received test.

(c) The manufacturer who conducts or causes to be conducted testing of any motor vehicle under § 86.1845–01 shall submit to the Administrator a record of the name and location of the testing laboratory(s) to be used to conduct testing for each model year 30 working days prior to the initiation of testing of that model year.

(d) The manufacturer of any test vehicle subject to § 86.1845–01 shall report to the Agency the test results (identifying the vehicle test group and emission test results) of any test vehicle in which the test vehicle fails to meet any applicable emission standard. The manufacturer must make this report within 72 hours of the completion of the testing of the test vehicle.

(e) The manufacturer who conducts or causes to be conducted testing of any motor vehicle under § 86.1846–01 shall establish, maintain and retain the following organized and indexed records by test group or Agency-designated subset.

(1) A description of all laboratory equipment calibrations and verifications as prescribed by subpart B of this part or by good engineering judgment.

(2) Procurement documentation. A description of the procurement area, a record of the source(s) of any list(s) of vehicles used as a basis for procurement, a complete record of: the number of vehicle owners/lessees in which attempt to contact was made and the number of vehicle owners/lessees actually contacted; the number of owners/lessees not contacted and the reasons and number of each for failure to contact; the number of owners contacted who declined to participate; and a complete record of the number of vehicles rejected after positive vehicle owner response and reason(s) for manufacturer rejection of each rejected vehicle.

(3) All records required to be maintained under this paragraph shall be retained by the manufacturer for a period of eight (8) years after the end of production of the test group to which they relate.

(f) Within 30 working days of the completion of testing of a test group or Agency-designated subset performed under § 86.1846–01, the manufacturer shall submit to the Administrator the following records organized by test group or Agency-designated subset.

(1) A complete record of all emission tests performed, including tests results, the date of each test, and the phase mass values for fuel economy, carbon dioxide and each pollutant measured by the Federal Test Procedure and Supplemental Federal Test Procedure as prescribed by subpart B of this part.

(2) For each test vehicle within a test group, a record and description of procedures and test results pertaining to any inspections, diagnostics, and maintenance performed on the test vehicle prior to any emission testing.

(3) A record and description of any inspections, diagnostics, maintenance performed and/or testing (including emission results) of any test vehicle tested subsequent to its initial emission test.

§ 86.1848–01 Certification.

(a)(1) If, after a review of the manufacturer's submitted Part I application, information obtained from any inspection, such other information as the Administrator may require, and any other pertinent data or information, the Administrator determines that the application is complete and that all vehicles within a test group as described in the application meet the requirements of this part and the Clean Air Act, the Administrator shall issue a certificate of conformity.

(2) If, after review of the manufacturer's application, request for certification, information obtained from any inspection, such other information as the Administrator may require, and any other pertinent data or information, the Administrator determines that the application is not complete or the vehicles within a test group as described in the application, do not meet applicable requirements or standards of the Act or of this part, the Administrator may deny the issuance of, suspend, or revoke a previously issued certificate of conformity. The Administrator will notify the manufacturer in writing, setting forth the basis for the determination. The manufacturer may request a hearing on the Administrator's determination.

(b) A certificate of conformity will be issued by the Administrator for a period not to exceed one model year and upon such terms as deemed necessary or appropriate to assure that any new motor vehicle covered by the certificate will meet the requirements of the Act and of this part.

(c) All certificates are conditional upon the following conditions being met:

(1) The manufacturer must supply all required information according to the provisions of §§ 86.1843–01 and 86.1844–01.

(2) The manufacturer must comply with all certification and in-use emission standards contained in subparts S and H of this part both during and after model year production.

(3) The manufacturer must comply with all implementation schedules sales percentages as required in § 86.1810 or elsewhere in this part. Failure to meet a required implementation schedule sales percentage will be considered to be a failure to satisfy a condition upon which the certificate was issued and any vehicles or trucks sold in violation of the implementation schedule shall not be covered by the certificate.

(4) For incomplete light-duty trucks and incomplete heavy-duty vehicles, a certificate covers only those new motor vehicles which, when completed by having the primary load-carrying device or container attached, conform to the maximum curb weight and frontal area limitations described in the application for certification as required in § 86.1844–01.

(5) The manufacturer must meet the in-use testing and reporting requirements contained in §§ 86.1845–01, 86.1846–01, and 86.1847–01, as applicable. Failure to meet the in-use testing or reporting requirements shall be considered a failure to satisfy a condition upon which the certificate was issued. A vehicle or truck will be considered to be covered by the certificate only if the manufacturer fulfills this condition upon which the certificate was issued.

(6) Vehicles are covered by a certificate of conformity only if they are in all material respects as described in the manufacturer's application for certification (Part I and Part II).

(7) For Tier 2 and interim non-Tier 2 vehicles, all certificates of conformity issued are conditional upon compliance with all provisions of §§ 86.1811–04,

86.1860–04, 86.1861–04 and 86.1862–04 both during and after model year production.

(i) Failure to meet the fleet average NO_X requirements of 0.07g/mi, 0.30 g/mi or 0.20 g/mi, as applicable, will be considered to be a failure to satisfy the terms and conditions upon which the certificate(s) was (were) issued and the vehicles sold in violation of the fleet average NO_X standard will not be covered by the certificate(s).

(ii) Failure to comply fully with the prohibition against selling credits that it has not generated or that are not available, as specified in § 86.1861–04, will be considered to be a failure to satisfy the terms and conditions upon which the certificate(s) was (were) issued and the vehicles sold in violation of this prohibition will not be covered by the certificate(s).

(iii) Failure to comply fully with the phase-in requirements of § 86.1811–04, will be considered to be a failure to satisfy the terms and conditions upon which the certificate(s) was (were) issued and the vehicles sold which do not comply with Tier 2 or interim non-Tier 2 requirements, up to the number needed to comply, will not be covered by the certificate(s).

(iv) For paragraphs (c)(7)(i) through (iii) of this section:

(A) The manufacturer must bear the burden of establishing to the satisfaction of the Administrator that the terms and conditions upon which the certificate(s) was (were) issued were satisfied.

(B) For recall and warranty purposes, vehicles not covered by a certificate of conformity will continue to be held to the standards stated or referenced in the certificate that otherwise would have applied to the vehicles.

(d) One certificate will be issued for each test group and evaporative/refueling family combination. For diesel fueled vehicles, one certificate will be issued for each test group. A certificate of conformity is deemed to cover the vehicles named in such certificate and produced during the model year.

(e) A manufacturer of new light-duty vehicles, light-duty trucks, and complete heavy-duty vehicles must obtain a certificate of conformity covering such vehicles from the Administrator prior to selling, offering for sale, introducing into commerce, delivering for introduction into commerce, or importing into the United States the new vehicle. Vehicles produced prior to the effective date of a certificate of conformity may also be covered by the certificate, once it is effective, if the following conditions are met:

(1) The vehicles conform in all respects to the vehicles described in the application for the certificate of conformity.

(2) The vehicles are not sold, offered for sale, introduced into commerce, or delivered for introduction into commerce prior to the effective date of the certificate of conformity.

(3) EPA is notified prior to the beginning of production when such production will start, and EPA is provided a full opportunity to inspect and/or test the vehicles during and after their production. EPA must have the opportunity to conduct SEA production line testing as if the vehicles had been produced after the effective date of the certificate.

(f) Vehicles imported by an original equipment manufacturer after December 31 of the calendar year for which the model year is named are still covered by the certificate of conformity as long as the production of the vehicle was completed before December 31 of that year.

(g) For test groups required to have an emission control diagnostic system, certification will not be granted if, for any emission data vehicle or other test vehicle approved by the Administrator in consultation with the manufacturer, the malfunction indicator light does not illuminate under any of the circumstances described in § 86.1806–01(k)(1) through (6).

(h) Vehicles equipped with aftertreatment technologies such as catalysts, otherwise covered by a certificate, which are driven outside the United States, Canada, and Mexico will be presumed to have been operated on leaded gasoline resulting in deactivation of such components as catalysts and oxygen sensors. If these vehicles are imported or offered for importation without retrofit of the catalyst or other aftertreatment technology, they will be considered not to be within the

coverage of the certificate unless included in a catalyst or other aftertreatment technology control program operated by a manufacturer or a United States Government agency and approved by the Administrator.

(i) For all light-duty vehicles and light light-duty trucks certified to NLEV standards under §§ 86.1710 through 86.1712, the following provisions apply:

(1) All certificates issued are conditional upon manufacturer compliance with all provisions of §§ 86.1710 through 86.1712 both during and after model year production.

(2) Failure to meet the requirements of § 86.1710(a) through (d) will be considered to be a failure to satisfy the conditions upon which the certificate(s) was issued and the vehicles sold in violation of the fleet average NMOG standard shall not be covered by the certificate.

(3) Failure to comply fully with the prohibition against a manufacturer selling credits that it has not generated or are not available, as specified in § 86.1710(e), will be considered to be a failure to satisfy the conditions upon which the certificate(s) was issued and the vehicles sold in violation of this prohibition shall not be covered by the certificate.

(4) Failure to comply fully with the prohibition against offering for sale Tier 1 vehicles and TLEVs in the Northeast Trading Region, as defined in § 86.1702, after model year 2000 if vehicles with the same test groups are not certified and offered for sale in California in the same model year, as specified in § 86.1711(a), will be considered to be a failure to satisfy the conditions upon which the certificate(s) was issued and the vehicles sold in violation of this prohibition shall not be covered by the certificate.

(5)(i) The Administrator will issue a National LEV certificate of conformity for 2000 model year vehicles or engines certified to comply with the California TLEV emission standards.

(ii) This certificate of conformity shall be granted after the Administrator has received and reviewed the California Executive Order a manufacturer has received for the same vehicles or engines.

(iii) Vehicles or engines receiving a certificate of conformity under the provisions in this paragraph can only be sold in the states included in the NTR, as defined in § 86.1702, and those states where the sale of California-certified vehicles is otherwise authorized.

(6) The manufacturer shall bear the burden of establishing to the satisfaction of the Administrator that the conditions upon which the certificate was issued were satisfied.

(7) For recall and warranty purposes, vehicles not covered by a certificate because of a violation of these conditions of the certificate will continue to be held to the standards stated in the certificate that would have otherwise applied to the vehicles.

[64 FR 23925, May 4, 1999, as amended at 65 FR 6866, Feb. 10, 2000; 65 FR 59977, Oct. 6, 2000]

§ 86.1848–10 Compliance with emission standards for the purpose of certification.

Section 86.1848–10 includes text that specifies requirements that differ from § 86.1848–01. Where a paragraph in § 86.1848–01 is identical and applicable to § 86.1848–10, this may be indicated by specifying the corresponding paragraph and the statement ''[Reserved]. For guidance see § 86.1848–01.'' Where a corresponding paragraph of § 86.1848–01 is not applicable, this is indicated by the statement ''[Reserved]''

(a) through (b) [Reserved]. For guidance see § 86.1848–01.

(c) The following conditions apply to all certificates:

(1) The manufacturer must supply all required information according to the provisions of §§ 86.1843–01 and 86.1844–01.

(2) The manufacturer must comply with all certification and in-use emission standards contained in subparts S and H of this part both during and after model year production.

(3) The manufacturer must comply with all implementation schedules sales percentages as required in § 86.1810 or elsewhere in this part. Failure to meet a required implementation schedule sales percentage will be considered to be a failure to satisfy a condition upon which the certificate was issued and any vehicles or trucks sold in violation of the implementation

schedule are not to be covered by the certificate.

(4) For incomplete light-duty trucks and incomplete heavy-duty vehicles, a certificate covers only those new motor vehicles that, when completed by having the primary load-carrying device or container attached, conform to the maximum curb weight and frontal area limitations described in the application for certification as required in § 86.1844–01.

(5) The manufacturer must meet the in-use testing and reporting requirements contained in §§ 86.1845–01, 86.1846–01, and 86.1847–01, as applicable. Failure to meet the in-use testing or reporting requirements shall be considered a failure to satisfy a condition upon which the certificate was issued. A vehicle or truck is considered to be covered by the certificate only if the manufacturer fulfills this condition upon which the certificate was issued.

(6) Vehicles are covered by a certificate of conformity only if they are in all material respects as described in the manufacturer's application for certification (Part I and Part II).

(7) All certificates of conformity issued are conditional upon compliance with all the provisions of §§ 86.1811 through 86.1816 and §§ 86.1860 through 86.1862 both during and after model year production. The manufacturer bears the burden of establishing to the satisfaction of the Administrator that the terms and conditions upon which each certificate was issued were satisfied. For recall and warranty purposes, vehicles not covered by a certificate of conformity will continue to be held to the standards stated or referenced in the certificate that otherwise would have applied to the vehicles.

(i) Failure to meet the applicable fleet average standard will be considered to be a failure to satisfy the terms and conditions upon which the certificate was issued and the vehicles sold in violation of the fleet average standard will not be covered by the certificate.

(ii) Failure to comply fully with the prohibition against selling credits that it has not generated or that are not available, as specified in § 86.1861, will be considered a failure to satisfy the terms and conditions upon which the certificate was issued and the vehicles sold in violation of this prohibition will not be covered by the certificate.

(iii) Failure to comply fully with the phase-in requirements of §§ 86.1811 through 86.1816 will be considered a failure to satisfy the terms and conditions upon which the certificate was issued and the vehicles sold that do not comply with the applicable standards, up to the number needed to comply, will not be covered by the certificate.

(8) For LDV/LLDTs and HLDT/MDPVs, all certificates of conformity issued are conditional upon compliance with all provisions of §§ 86.1811–10 and 86.1864–10 both during and after model year production. The manufacturer bears the burden of establishing to the satisfaction of the Administrator that the terms and conditions upon which the certificate(s) was (were) issued were satisfied. For recall and warranty purposes, vehicles not covered by a certificate of conformity will continue to be held to the standards stated or referenced in the certificate that otherwise would have applied to the vehicles.

(i) Failure to meet the fleet average cold temperature NMHC requirements will be considered a failure to satisfy the terms and conditions upon which the certificate(s) was (were) issued and the vehicles sold in violation of the fleet average NMHC standard will not be covered by the certificate(s).

(ii) Failure to comply fully with the prohibition against selling credits that are not generated or that are not available, as specified in § 86.1864–10, will be considered a failure to satisfy the terms and conditions upon which the certificate(s) was (were) issued and the vehicles sold in violation of this prohibition will not be covered by the certificate(s).

(iii) Failure to comply fully with the phase-in requirements of § 86.1811–10 will be considered a failure to satisfy the terms and conditions upon which the certificate(s) was (were) issued and the vehicles sold that do not comply with cold temperature NMHC requirements, up to the number needed to comply, will not be covered by the certificate(s).

(9) For 2012 and later model year LDVs, LDTs, and MDPVs, all certificates of conformity issued are conditional upon compliance with all provisions of §§ 86.1818 and 86.1865 both during and after model year production. Similarly, for 2014 and later model year HDV, and other HDV subject to standards under § 86.1819, all certificates of conformity issued are conditional upon compliance with all provisions of §§ 86.1819 and 86.1865 both during and after model year production. The manufacturer bears the burden of establishing to the satisfaction of the Administrator that the terms and conditions upon which the certificate(s) was (were) issued were satisfied. For recall and warranty purposes, vehicles not covered by a certificate of conformity will continue to be held to the standards stated or referenced in the certificate that otherwise would have applied to the vehicles.

(i) Failure to meet the fleet average CO_2 requirements will be considered a failure to satisfy the terms and conditions upon which the certificate(s) was (were) issued and the vehicles sold in violation of the fleet average CO_2 standard will not be covered by the certificate(s). The vehicles sold in violation will be determined according to § 86.1865–12(k)(8).

(ii) Failure to comply fully with the prohibition against selling credits that are not generated or that are not available, as specified in § 86.1865–12, will be considered a failure to satisfy the terms and conditions upon which the certificate(s) was (were) issued and the vehicles sold in violation of this prohibition will not be covered by the certificate(s).

(iii) For manufacturers using the conditional exemption under § 86.1801–12(k), failure to fully comply with the fleet production thresholds that determine eligibility for the exemption will be considered a failure to satisfy the terms and conditions upon which the certificate(s) was (were) issued and the vehicles sold in violation of the stated sales and/or production thresholds will not be covered by the certificate(s).

(iv) For manufacturers that are determined to be operationally independent under § 86.1838–01(d), failure to report a material change in their status within 60 days as required by § 86.1838–01(d)(2) will be considered a failure to satisfy the terms and conditions upon which the certificate(s) was (were) issued and the vehicles sold in violation of the operationally independent criteria will not be covered by the certificate(s).

(v) For manufacturers subject to an alternative fleet average greenhouse gas emission standard approved under § 86.1818–12(g), failure to comply with the annual sales thresholds that are required to maintain use of those standards, including the thresholds required for new entrants into the U.S. market, will be considered a failure to satisfy the terms and conditions upon which the certificate(s) was (were) issued and the vehicles sold in violation of stated sales and/or production thresholds will not be covered by the certificate(s).

(d)–(i) [Reserved]. For guidance see § 86.1848–01.

[72 FR 8567, Feb. 26, 2007, as amended at 75 FR 25690, May 7, 2010; 76 FR 39522, July 6, 2011; 77 FR 63163, Oct. 15, 2012; 79 FR 23734, Apr. 28, 2014; 81 FR 73991, Oct. 25, 2016]

§ 86.1849–01 Right of entry.

(a) Any manufacturer who has applied for certification of a new motor vehicle subject to testing under this subpart, or any manufacturer or entity who conducts or causes to be conducted in-use verification or in-use confirmatory testing under this subpart, shall admit or cause to be admitted any EPA Enforcement Officer or any EPA authorized representative during operating hours on presentation of credentials to any of the following:

(1) Any facility where any such certification or in-use verification or in-use confirmatory testing or any procedures or activities connected with such testing are or were performed.

(2) Any facility where any new motor vehicle or test vehicle used for certification, in-use verification or in-use confirmatory testing which is being, was, or is to be tested is present.

(3) Any facility where any construction process or assembly process used in the modification or build up of such a vehicle into a certification vehicle is taking place or has taken place.

(4) Any facility where any record or other document relating to § 86.1849–01(a) (1), (2), and/or (3) is located.

(b) Upon admission to any facility referred to in paragraph (a) of this section, any EPA official or EPA authorized representative shall be allowed:

(1) To inspect and monitor any part or aspect of such procedures, activities, and testing facilities, including, but not limited to, monitoring vehicle preconditioning, emissions tests and mileage (or service) accumulation, bench aging, maintenance, and vehicle soak and storage procedures, and to verify correlation or calibration of test equipment.

(2) To inspect and make copies of any such records, designs, or other documents, including those records specified in §§ 86.1843–01, 86.1844–01, and 86.1847–01.

(c) In order to allow the Administrator to determine whether or not production motor vehicles conform to the conditions upon which a certificate of conformity has been issued, or conform in all material respects to the design specifications which applied to those vehicles described in the certification application for which a certificate of conformity has been issued to standards prescribed under section 202 of the Act, any manufacturer shall admit any EPA Enforcement Officer or EPA authorized representative on presentation of credentials to:

(1) Any facility where any document, design, or procedure relating to the translation of the design and construction of engines and emission-related components described in the compliance application or used for certification testing into production vehicles is located or carried on; and

(2) Any facility where any motor vehicles to be introduced into commerce are manufactured or assembled.

(d) Upon admission to any facility referred to in paragraph (c) of this section, any EPA Enforcement Officer or EPA authorized representative shall be allowed:

(1) To inspect and monitor any aspects of such manufacture or assembly and other procedures;

(2) To inspect and make copies of any such records, documents or designs; and

(3) To inspect and photograph any part or aspect of any such new motor vehicles and any component used in the assembly thereof that are reasonably related to the purpose of the entry.

(e) Any EPA official or EPA authorized representative shall be furnished by those in charge of a facility being inspected with such reasonable assistance as he may request to help him discharge any function set forth in this paragraph. Each applicant for or recipient of certification is required to cause those in charge of a facility operated for its benefit to furnish such reasonable assistance without charge to EPA whether or not the applicant controls the facility.

(f) The duty to admit or cause to be admitted any EPA Enforcement Officer or EPA authorized representative applies whether or not the applicant owns or controls the facility in question and applies both to domestic and to foreign manufacturers and facilities. EPA will not attempt to make any inspections which it has been informed that local law forbids. However, if local law makes it impossible to what is necessary to insure the accuracy of data generated at a facility, no informed judgment that a vehicle is certifiable or is covered by a certificate can properly be based on those data. It is the responsibility of the manufacturer to locate its testing and manufacturing facilities in jurisdictions where this situation will not arise.

(g) For purposes of this section:

(1) ''Presentation of credentials'' shall mean display of the document designating a person as an EPA Enforcement Officer or EPA authorized representative.

(2) Where vehicle, component, or engine storage areas or facilities are concerned, ''operating hours'' shall mean all times during which personnel other than custodial personnel are at work in the vicinity of the area or facility and have access to it.

(3) Where facilities or areas other than those covered by paragraph (g)(2) of this section are concerned, ''operating hours'' shall mean all times during which an assembly line is in operation or all times during which testing,

maintenance, mileage (or service) accumulation, production or compilation of records, or any other procedure or activity related to certification testing, to translation of designs from the test stage to the production stage, or to vehicle (or engine) manufacture or assembly is being carried out in a facility.

(4) *Reasonable assistance* includes, but is not limited to, clerical, copying, interpretation and translation services, the making available upon request of personnel of the facility being inspected during their working hours to inform the EPA Enforcement Officer or EPA authorized representative of how the facility operates and to answer his questions, and the performance on request of emissions tests on any vehicle which is being, has been, or will be used for certification or in-use verification or confirmatory testing. Such tests shall be nondestructive, but may require appropriate mileage (or service) accumulation. A manufacturer may be compelled to cause the personal appearance of any employee at such a facility before an EPA Enforcement Officer or EPA authorized representative by written request for his appearance, signed by the Assistant Administrator for Air and Radiation or the Assistant Administrator for Enforcement and Compliance Assurance, served on the manufacturer. Any such employee who has been instructed by the manufacturer to appear will be entitled to be accompanied, represented, and advised by counsel.

§ 86.1850–01 Denial, suspension or revocation of certificate of conformity.

(a) If, after review of the manufacturer's application, request for certification, information obtained from any inspection, such other information as the Administrator may require, and any other pertinent data or information, the Administrator determines that one or more test vehicles do not meet applicable requirements or standards of the Act or of this part, the Administrator will notify the manufacturer in writing, setting forth the basis for the determination. The manufacturer may request a hearing on the Administrator's determination.

(b) Notwithstanding the fact that the vehicles described in the application may comply with all other requirements of this subpart, the Administrator may deny issuance of, suspend, or revoke a previously issued certificate of conformity if the Administrator finds any one of the following infractions to be substantial:

(1) The manufacturer submits false or incomplete information.

(2) The manufacturer denies an EPA enforcement officer or EPA authorized representative the opportunity to conduct authorized inspections as required under § 86.1849–01.

(3) The manufacturer renders inaccurate any test data which it submits, or fails to make a good engineering judgment in accordance with § 86.1851–01(c)(1).

(4) The manufacturer denies an EPA enforcement officer or EPA authorized representative reasonable assistance as required in § 86.1849–01.

(5) The manufacturer fails to provide the records required in § 86.1844–01 to the Administrator within the deadline set forth in the request for such information.

(6) The manufacturer fails to comply with all conditions under which the certificate of conformity was granted as specified in 86.1848–01.

(7) The manufacturer otherwise circumvents the intent of the Act or of this part.

(c) The manufacturer shall bear the burden of establishing to the satisfaction of the Administrator that the conditions upon which the certificate was issued were satisfied, or that any failure to satisfy a condition is not substantial.

(d) If a manufacturer knowingly commits an infraction specified in paragraphs (b)(1) through (b)(7) of this section, knowingly commits any fraudulent act which results in the issuance of a certificate of conformity, or fails to comply with the conditions specified in § 86.1843–01, the Administrator may deem such certificate void ab initio.

(e) When the Administrator denies, suspends, revokes, or voids ab initio a certificate, EPA will provide the manufacturer a written determination. The manufacturer may request a hearing

under § 86.1853–01 on the Administrator's decision.

(f) Any suspension or revocation of a certificate of conformity shall extend no further than to forbid the introduction into commerce of vehicles previously covered by the certificate which are still in the possession of the manufacturer, except in cases of such fraud or other misconduct that makes the certification void ab initio.

§ 86.1851–01 Application of good engineering judgment to manufacturers' decisions.

(a) The manufacturer shall exercise good engineering judgment in making all decisions called for under this subpart, including but not limited to selections, categorizations, determinations, and applications of the requirements of the subpart.

(b) Upon written request by the Administrator, the manufacturer shall provide within 15 working days (or such longer period as may be allowed by the Administrator) a written description of the engineering judgment in question.

(c) The Administrator may reject any such decision by a manufacturer if it is not based on good engineering judgment, or is otherwise inconsistent with the requirements of this subpart.

(d) If the Administrator rejects a decision by a manufacturer with respect to the exercise of good engineering judgment, the following provisions shall apply:

(1) If the Administrator determines that incorrect information was deliberately used in the decision process, that important information was deliberately overlooked, that the decision was not made in good faith, or that the decision was not made with a rational basis, the Administrator may suspend or void ab initio a certificate of conformity.

(2) If the Administrator determines that the manufacturer's decision does not meet the provisions of paragraph (d)(1) of this section, but that a different decision would reflect a better exercise of good engineering judgment, then the Administrator will notify the manufacturer of this concern and the basis thereof.

(i) The manufacturer shall have at least 30 days to respond to this notice. The Administrator may extend this response period upon request from the manufacturer if it is necessary to generate additional data for the manufacturer's response.

(ii) The Administrator shall make the final ruling after considering the information provided by the manufacturer during the response period. If the Administrator determines that the manufacturer's decision was not made using good engineering judgment, he/she may reject that decision and apply the new ruling to future corresponding decisions as soon as practicable.

(e) The Administrator shall notify the manufacturer in writing regarding any decision reached under paragraph (d)(1) or (2) of this section. The Administrator shall include in this notification the basis for reaching the determination.

(f) Within 30 working days following receipt of notification of the Administrator's determinations made under paragraph (d) of this section, the manufacturer may request a hearing on those determinations. The request shall be in writing, signed by an authorized representative of the manufacturer, and shall include a statement specifying the manufacturer's objections to the Administrator's determinations, and data or other analysis in support of such objections. If, after review of the request and supporting data or analysis, the Administrator finds that the request raises a substantial factual issue, he/she shall provide the manufacturer a hearing in accordance with § 86.1853–01 with respect to such issue.

§ 86.1852–01 Waivers for good in-use emission performance.

(a) The Administrator may waive requirements of this subpart relating to development of emission-related information or test data if the Administrator determines with confidence that the in-use emission test verification data required in § 86.1845–01 are below the applicable emission standards for an appropriate period of time, and that such performance is likely to continue in subsequent model years.

(b) Any waiver granted under paragraph (a) of this section will be granted only if the Administrator determines that the waived requirement is not needed to assure continued emission compliance and the Administrator will have sufficient testing and other information in order to make certification decisions.

(c) Any waiver granted under paragraph (a) of this section would be limited in duration to a period of one model year, unless extended by the Administrator as a result of continued demonstrations of good in-use emission performance.

(d) The Administrator reserves the right to deny or revoke a waiver which may have been granted if he/she determines that the manufacturer no longer qualifies for the waiver.

§ 86.1853–01 Certification hearings.

If a manufacturer's request for a hearing is approved, EPA will follow the hearing procedures specified in 40 CFR part 1068, subpart G.

[81 FR 73992, Oct. 25, 2016]

§ 86.1854–12 Prohibited acts.

(a) The following acts and the causing thereof are prohibited:

(1) In the case of a manufacturer, as defined by § 86.1803, of new motor vehicles or new motor vehicle engines for distribution in commerce, the sale, or the offering for sale, or the introduction, or delivery for introduction, into commerce, or (in the case of any person, except as provided by regulation of the Administrator), the importation into the United States of any new motor vehicle or new motor vehicle engine subject to this subpart, unless such vehicle or engine is covered by a certificate of conformity issued (and in effect) under regulations found in this subpart (except as provided in Section 203(b) of the Clean Air Act (42 U.S.C. 7522(b)) or regulations promulgated thereunder).

(2)(i) For any person to fail or refuse to permit access to or copying of records or to fail to make reports or provide information required under Section 208 of the Clean Air Act (42 U.S.C. 7542) with regard to vehicles.

(ii) For a person to fail or refuse to permit entry, testing, or inspection authorized under Section 206(c) (42 U.S.C. 7525(c)) or Section 208 of the Clean Air Act (42 U.S.C. 7542) with regard to vehicles.

(iii) For a person to fail or refuse to perform tests, or to have tests performed as required under Section 208 of the Clean Air Act (42 U.S.C. 7542) with regard to vehicles.

(iv) For a person to fail to establish or maintain records as required under §§ 86.1844, 86.1862, 86.1864, and 86.1865 with regard to vehicles.

(v) For any manufacturer to fail to make information available as provided by regulation under Section 202(m)(5) of the Clean Air Act (42 U.S.C. 7521(m)(5)) with regard to vehicles.

(3)(i) For any person to remove or render inoperative any device or element of design installed on or in a vehicle or engine in compliance with regulations under this subpart prior to its sale and delivery to the ultimate purchaser, or for any person knowingly to remove or render inoperative any such device or element of design after such sale and delivery to the ultimate purchaser.

(ii) For any person to manufacture, sell or offer to sell, or install, any part or component intended for use with, or as part of, any vehicle or engine, where a principal effect of the part or component is to bypass, defeat, or render inoperative any device or element of design installed on or in a vehicle or engine in compliance with regulations issued under this subpart, and where the person knows or should know that the part or component is being offered for sale or installed for this use or put to such use.

(4) For any manufacturer of a vehicle or engine subject to standards prescribed under this subpart:

(i) To sell, offer for sale, introduce or deliver into commerce, or lease any such vehicle or engine unless the manufacturer has complied with the requirements of Section 207(a) and (b) of the Clean Air Act (42 U.S.C. 7541(a), (b)) with respect to such vehicle or engine, and unless a label or tag is affixed to such vehicle or engine in accordance with Section 207(c)(3) of the Clean Air Act (42 U.S.C. 7541(c)(3)).

(ii) To fail or refuse to comply with the requirements of Section 207 (c) or

(e) of the Clean Air Act (42 U.S.C. 7541(c) or (e)).

(iii) Except as provided in Section 207(c)(3) of the Clean Air Act (42 U.S.C. 7541(c)(3)), to provide directly or indirectly in any communication to the ultimate purchaser or any subsequent purchaser that the coverage of a warranty under the Clean Air Act is conditioned upon use of any part, component, or system manufactured by the manufacturer or a person acting for the manufacturer or under its control, or conditioned upon service performed by such persons.

(iv) To fail or refuse to comply with the terms and conditions of the warranty under Section 207(a) or (b) of the Clean Air Act (42 U.S.C. 7541(a) or (b)).

(b) For the purposes of enforcement of this subpart, the following apply:

(1) No action with respect to any element of design referred to in paragraph (a)(3) of this section (including any adjustment or alteration of such element) shall be treated as a prohibited act under paragraph (a)(3) of this section if such action is in accordance with Section 215 of the Clean Air Act (42 U.S.C. 7549);

(2) Nothing in paragraph (a)(3) of this section is to be construed to require the use of manufacturer parts in maintaining or repairing a vehicle or engine. For the purposes of the preceding sentence, the term ''manufacturer parts'' means, with respect to a motor vehicle engine, parts produced or sold by the manufacturer of the motor vehicle or motor vehicle engine;

(3) Actions for the purpose of repair or replacement of a device or element of design or any other item are not considered prohibited acts under paragraph (a)(3) of this section if the action is a necessary and temporary procedure, the device or element is replaced upon completion of the procedure, and the action results in the proper functioning of the device or element of design;

(4) Actions for the purpose of a conversion of a motor vehicle or motor vehicle engine for use of a clean alternative fuel (as defined in title II of the Clean Air Act) are not considered prohibited acts under paragraph (a) of this section if:

(i) The vehicle complies with the applicable standard when operating on the alternative fuel; and

(ii) In the case of engines converted to dual fuel or flexible use, the device or element is replaced upon completion of the conversion procedure, and the action results in proper functioning of the device or element when the motor vehicle operates on conventional fuel.

[75 FR 25691, May 7, 2010]

§§ 86.1855–86.1859 [Reserved]

§ 86.1860–04 How to comply with the Tier 2 and interim non-Tier 2 fleet average NO_X standards.

(a) The fleet average standards referred to in this section are the corporate fleet average standards for FTP exhaust NO_X emissions set forth in: § 86.1811–04(d) for Tier 2 LDV/Ts and MDPVs (0.07 g/mi); § 86.1811–04(l)(3) for interim non-Tier 2 LDV/LLDTs (0.30 g/mi); and, § 86.1811–04(l)(3) for interim non-Tier 2 HLDT/MDPVs (0.20 g/mi). Unless otherwise indicated in this section, the provisions of this section apply to all three corporate fleet average standards, except that the interim non-Tier 2 fleet average NO_X standards do not apply to a manufacturer whose U.S. LDV/T and MDPV sales are 100% Tier 2 LDV/Ts and MDPVs.

(b)(1) Each manufacturer must comply with the applicable fleet average NO_X standard, or standards, on a sales weighted average basis, at the end of each model year, using the procedure described in this section.

(2) During a phase-in year, the manufacturer must comply with the applicable fleet average NO_X standard for the required phase-in percentage for that year as specified in § 86.1811–04(k)(1), or for the alternate phase-in percentage as permitted under § 86.1811–04(k)(6).

(c)(1)(i) Each manufacturer must separately compute the sales weighted averages of the individual NO_X emission standards to which it certified all its Tier 2 vehicles, interim non-Tier 2 LDV/LLDTs, and interim non-Tier 2 HLDT/MDPVs of a given model year as described in § 86.1804(l)(2).

(ii) For model years up to and including 2008, manufacturers must compute separate NO_X fleet averages for Tier 2 LDV/LLDTs and Tier 2 HLDT/MDPVs.

(2)(i) For model years up to and including 2008, if a manufacturer certifies its entire U.S. sales of Tier 2 or interim non-Tier 2 LDV/LLDTs or interim non-Tier 2 HLDT/MDPVs, to full useful life bins having NO_X standards at or below the applicable fleet average NO_X standard, that manufacturer may elect not to compute a fleet average NO_X level for that category of vehicles. A manufacturer making such an election must not generate NO_X credits for that category of vehicles for that model year.

(ii) For model years after 2008, if a manufacturer certifies its entire U.S. sales of Tier 2 vehicles to full useful life bins having NO_X standards at or below 0.07 gpm, that manufacturer may elect not to compute a fleet average NO_X level for its Tier 2 vehicles. A manufacturer making such an election must not generate NO_X credits for that model year.

(d) The sales weighted NO_X fleet averages determined pursuant to paragraph (c) of this section must be compared with the applicable fleet average standard; 0.07 g/mi for NO_X for Tier 2 LDV/Ts and MDPVs, 0.30 g/mi for NO_X for interim non-Tier 2 LDV/LLDTs, and 0.20 g/mi for NOx for interim non-Tier 2 HLDT/MDPVs. Each manufacturer must comply on an annual basis with the fleet average standards by:

(1) Showing that its sales weighted average NO_X emissions of its LDV/LLDTs, HLDT/MDPVs or LDV/Ts, as applicable, are at or below the applicable fleet average standard; or

(2) If the sales weighted average is not at or below the applicable fleet average standard, by obtaining and applying sufficient Tier 2 NO_X credits, interim non-Tier 2 LDV/LLDT NO_X credits or interim non-Tier 2 HLDT/MDPV NO_X credits, as appropriate, and as permitted under § 86.1861–04.

(i) Manufacturers may not use NMOG credits generated under the NLEV program in subpart R of this part to meet any Tier 2 or interim non-Tier 2 NO_X fleet average standard.

(ii) Tier 2 NO_X credits may not be used to meet any fleet average interim non-Tier 2 NO_X standard except as permitted by § 86.1860–04(e)(1).

(iii) Interim non-Tier 2 NO_X credits may not be used to meet the Tier 2 fleet average NO_X standard.

(iv) Interim non-Tier 2 NO_X credits from HLDT/MDPVs may not be used to meet the fleet average NO_X standard for interim non-Tier 2 LDV/LLDTs, and interim non-Tier 2 credits from LDV/LLDTs may not be used to meet the fleet average NO_X standard for interim non-Tier 2 HLDT/MDPVs.

(e) (1) Manufacturers that cannot meet the requirements of paragraph (d) of this section, may carry forward a credit deficit for three model years, but must not carry such deficit into the fourth year. When applying credits to reduce or eliminate a deficit under the fleet average standard for interim LDV/LLDTs or interim HLDT/MDPVs, that has been carried forward into a year subsequent to its generation, a manufacturer may apply credits from Tier 2 LDV/LLDTs or Tier 2 HLDT/MDPVs, respectively, as well as from the appropriate group of interim vehicles. A manufacturer must not use interim credits to reduce or eliminate any NO_X credit deficit under the Tier 2 fleet average standard.

(2) A manufacturer carrying a credit deficit into the third year must generate or obtain credits to offset that deficit and apply them to the deficit at a rate of 1.2:1, (i.e. deficits carried into the third model year must be repaid with credits equal to 120 percent of the deficit).

(3) A manufacturer must not bank credits for future model years or trade credits to another manufacturer during a model year into which it has carried a deficit.

(f) *Computing fleet average* NO_X emissions. (1) Manufacturers must separately compute these fleet NO_X averages using the equation contained in paragraph (f)(2) of this section:

(i) Their Tier 2 LDV/LLDT and Tier 2 HLDT/MDPV fleet average NO_X emissions for each model year through 2008;

(ii) Their combined Tier 2 LDV/T and MDPV fleet average NO_X emissions for each model year after 2008;

(iii) Their interim non-Tier 2 LDV/LLDT fleet average NO_X emissions for each model year through 2006; and

(iv) Their interim non-Tier 2 HLDT/MDPV fleet average NO_X emissions for each model year through 2008.

(2) The equation for computing fleet average NO_X emissions is as follows:

$$\frac{\sum(N \times NO_X \text{ emission standard})}{\text{Total number of vehicles of the appropriate category (e.g., all LDV/Ts and MDPVs, or interim non-Tier 2 HLDT/MDPVs, etc.) sold including HEVs and ZEVs}}$$

Where:

N = The number of vehicles sold in the applicable category that were certified for each corresponding NO_X emission bin. N must be based on vehicles counted to the point of first sale.

Emission standard = The individual full useful life NO_X emission standard for each bin for which the manufacturer had sales.

(3) The results of the calculation in paragraph (f)(2) of this section must be rounded as required by § 86.1837–01.

(4) When approved in advance by the Administrator, the numerator in the equation in paragraph (f)(2) of this section may be adjusted downward by the product of the number of HEVs from each NO_X emission bin times a HEV NO_X contribution factor determined through mathematical estimation of the reduction in NO_X emissions over the test procedure used to certify the HEVs. The reduction in NO_X emissions must be determined using good engineering judgement and reflect the relation in actual full useful life NO_X emissions to the full useful life NO_X standards for the certification bin applicable to the vehicles. The Administrator may require that calculation of the HEV NO_X contribution factor include vehicle parameters such as vehicle weight, portion of time during the test procedure that the HEV operates with zero exhaust emissions, zero emission range, NO_X emissions from fuel-fired heaters and NO_X emissions from electricity production and storage.

(g) *Additional credits for vehicles certified to 150,000 mile useful lives.* (1) A manufacturer may certify any test group to an optional useful life of 15 years or 150,000 miles, whichever occurs first.

(2)(i) For any test group certified to the optional 15 year/150,000 mile useful life, the manufacturer may generate additional NO_X credits, except as prohibited in paragraph (g)(3) of this section.

(ii) The manufacturer must calculate these extra NO_X credits, where permitted, by substituting an adjusted NO_X standard for the applicable NO_X standard from the full useful life certification bin when it calculates the applicable fleet average NO_X emissions by the procedure in paragraph (f) of this section. The adjusted standard must be equal to the applicable full useful life NO_X standard multiplied by 0.85 and rounded to one more decimal place than the number of decimal places as the applicable full useful life NO_X standard.

(3) A manufacturer electing not to comply with applicable intermediate life standards as permitted under § 86.1811–04(c)(4) may not generate additional credits from vehicles certified to a useful life of 15 years/150,000 miles; except that, for bins where such intermediate life standards do not exist or are specifically deemed to be optional in § 86.1811–04(c)(4), the manufacturer may generate additional NO_X credits from vehicles certified to a useful life of 15 years/150,000 miles.

(h) *Additional credits for vehicles certified to low bins.* A manufacturer may obtain additional NO_X credits by certifying vehicles to bins 1 and/or 2 in model years from 2001 through 2005 subject to the following requirements:

(1) When computing the fleet average Tier 2 NO_X emissions using the formula in paragraph (f)(2) of this section, the manufacturer may multiply the number of vehicles certified to bins 1 and 2 by the applicable multiplier shown in Table S04–11 when computing the denominator in the formula. These multipliers may not be used after model year 2005. The table follows:

TABLE S04–11—MULTIPLIERS FOR ADDITIONAL TIER 2 NO_X CREDITS FOR BIN 1 AND 2 LDV/TS

Bin	Model year	Multiplier 73
2	2001, 2002, 2003, 2004, 2005	1.5
1	2001, 2002, 2003, 2004, 2005	2.0

(2) Optionally, instead of the process described in paragraph (h)(1) of this section, when computing Tier 2 NO_X credits using the formula in § 86.1861–04(b)(1), the manufacturer may multiply the number of vehicles certified to bin 1 and bin 2 by the applicable multiplier shown in Table S04–11 in paragraph (h)(1) of this section when computing the ''Total number of Tier 2 Vehicles Sold, Including ZEVs and HEVs''. These multipliers may not be used after model year 2005.

[65 FR 6866, Feb. 10, 2000, as amended at 66 FR 19310, Apr. 13, 2001]

§ 86.1860–17 How to comply with the Tier 3 fleet-average standards.

(a) You must show that you meet the applicable fleet-average NMOG + NO_X standards from §§ 86.1811 and 86.1816 and the fleet-average evaporative emission standards from § 86.1813 as described in this section. Note that separate fleet-average calculations are required for the FTP and SFTP exhaust emission standards under § 86.1811.

(b) Calculate your fleet-average value for each model year for all vehicle models subject to a separate fleet-average standard using the following equation, rounded to the nearest 0.001 g/mile for NMOG + NO_X emissions and the nearest 0.001 g/test for evaporative emissions:

$$Fleet\ average\ value = \frac{\sum_{i=1}^{b}(N_i \cdot FEL_i)}{N_{total}}$$

Where:

i = A counter associated with each separate Tier 3 test group or evaporative family.

b = The number of separate Tier 3 test groups or evaporative families from a given averaging set to which you certify your vehicles.

N_i = The actual nationwide sales for the model year for test group or evaporative family i. Include allowances for evaporative emissions as described in § 86.1813.

FEL_i = The FEL selected for test group or evaporative family i. Disregard any separate standards that apply for in-use testing or for testing under high-altitude conditions.

N_{total} = The actual nationwide sales for the model year for all your Tier 3 vehicles from the averaging set, except as described in paragraph (c) of this section. The pool of vehicle models included in N_{total} may vary by model year, and it may be different for evaporative standards, FTP exhaust standards, and SFTP exhaust standards in a given model year.

(c) Do not include any of the following vehicles to calculate your fleet-average value:

(1) Vehicles that you do not certify to the standards of this part because they are permanently exempted under 40 CFR part 85 or part 1068.

(2) Exported vehicles.

(3) Vehicles excluded under § 86.1801.

(4) For model year 2017, do not include vehicle sales in California or the section 177 states for calculating the fleet average value for evaporative emissions.

(d) Except as specified in paragraph (e) of this section, your calculated fleet-average value may not exceed the corresponding fleet-average standard for the model year.

(e) You may generate or use emission credits related to your calculated fleet-average value as follows:

(1) You may generate emission credits as described in § 86.1861 if your fleet-average value is below the corresponding fleet-average standard.

(2) You may use emission credits as described in § 86.1861 if your fleet-average value is above the corresponding fleet-average standard. Except as specified in paragraph (e)(3) of this section, you must use enough credits for each model year to show that your adjusted fleet average value does not exceed the fleet-average standard.

(3) The following provisions apply if you do not have enough emission credits to demonstrate compliance with a fleet-average standard in a given model year:

(i) You may have a credit deficit for up to three model years within an averaging set under § 86.1861–17(c). You may not bank emission credits with respect to a given emission standard during a model year in which you have a credit deficit in the same averaging set. If you fail to meet the fleet-average standard for four consecutive model years, the vehicles causing you to exceed the fleet-average standard will be considered not covered by the certificate of conformity. You will be subject to penalties on an individual-vehicle basis for sale of vehicles not covered by a certificate of conformity.

(ii) You must notify us in writing how you plan to eliminate the credit deficit within the specified time frame. If we determine that your plan is unreasonable or unrealistic, we may deny an application for certification for a test group or evaporative family if its bin standard or FEL would increase your credit deficit. We may determine that your plan is unreasonable or unrealistic based on a consideration of past and projected use of specific technologies, the historical sales mix of your vehicle models, your commitment to limit sales of higher-emission vehicles, and expected access to traded credits. We may also consider your plan unreasonable if your fleet-average emission level increases relative to the first model year of a credit deficit or any later model year. We may require that you send us interim reports describing your progress toward resolving your credit deficit over the course of a model year.

(f) If the applicable bin standards and FELs for all your vehicle models are at or below a corresponding fleet-average standard for a given model year, and you do not want to generate emission credits, you may omit the calculations described in this section.

(g) For purposes of calculating the statute of limitations, the following actions are all considered to occur at the expiration of the deadline for offsetting a deficit as specified in paragraph (e)(3) of this section:

(1) Failing to meet the requirements of paragraph (e)(3) of this section.

(2) Failing to satisfy the conditions upon which a certificate was issued relative to offsetting a deficit.

(3) Selling, offering for sale, introducing or delivering into U.S. commerce, or importing vehicles that are found not to be covered by a certificate as a result of failing to offset a deficit.

[79 FR 23735, Apr. 28, 2014]

§ 86.1861–04 How do the Tier 2 and interim non-Tier 2 NO_X averaging, banking and trading programs work?

(a) *General provisions for Tier 2 credits and debits.* (1) A manufacturer whose Tier 2 fleet average NO_X emissions exceeds the 0.07 g/mile standard must complete the calculation at paragraph (b) of this section to determine the size of its NO_X credit deficit. A manufacturer whose Tier 2 fleet average NO_X emissions is less than or equal to the 0.07 g/mile standard must complete the calculation in paragraph (b) of this section if it desires to generate NO_X credits. In either case, the number of credits or debits determined in the calculation at paragraph (b) of this section must be rounded to the nearest whole number.

(2) Credits generated according to the calculation in paragraph (b)(1) of this section may be banked for future use or traded to another manufacturer.

(3) NO_X credits are not subject to any discount or expiration date except as required under the deficit carryforward provisions of § 86.1860–04(e)(2).

(4) If a manufacturer calculates that it has negative credits (debits or a credit deficit) for a given model year, it must obtain sufficient credits, as required under § 86.1860–04(e)(2), from vehicles produced by itself or another manufacturer in a model year no later than the third model year following the model year for which it calculated the credit deficit. (Example: if a manufacturer calculates that it has a NO_X credit deficit for the 2008 model year, it must obtain sufficient NO_X credits to offset that deficit from its own production or that of other manufacturers' 2011 or earlier model year vehicles.)

(6)(i) Manufacturers may not use NO_X credits to comply with the NLEV requirements of subpart R of this part.

(ii) Manufacturers may not use NMOG credits generated by vehicles certified to the NLEV requirements of subpart R of this part to comply with any NO_X requirements of this subpart.

(iii) Manufacturers may not use NO_X credits generated by interim non-Tier 2 vehicles to comply with the fleet average NO_X standard for Tier 2 vehicles.

(iv) Manufacturers may not use NO_X credits generated by Tier 2 vehicles to comply with any fleet average NO_X standard for interim non-Tier 2 vehicles, except as permitted under § 86.1860–04(e).

(v) Manufacturers may not use NO_X credits generated by interim non-Tier 2 LDV/LLDTs to comply with the fleet average NO_X standard for interim non-Tier 2 HLDT/MDPVs.

(vi) Manufacturers may not use NO_X credits generated by interim non-Tier 2 HLDT/MDPVs to comply with the fleet average NO_X standard for interim non-Tier 2 LDV/LLDTs.

(vii) Manufacturers may not use NO_X credits generated by Tier 2 LDV/LLDTs to comply with the Tier 2 NO_X average standard for HLDT/MDPVs before the 2009 model year.

(viii) Manufacturers may not use NO_X credits generated by Tier 2 HLDT/MDPVs to comply with the Tier 2 NO_X average standard for LDV/LLDTs before the 2009 model year.

(7) Manufacturers may bank Tier 2 NO_X credits for later use to meet the Tier 2 fleet average NO_X standard or trade them to another manufacturer. Credits are earned on the last day of the model year. Before trading or carrying over credits to the next model year, a manufacturer must apply available credits to offset any credit deficit, where the deadline to offset that credit deficit has not yet passed.

(8) There are no property rights associated with NO_X credits generated under this subpart. Credits are a limited authorization to emit the designated amount of emissions. Nothing in this part or any other provision of law should be construed to limit EPA's authority to terminate or limit this authorization through a rulemaking.

(b) *Calculating Tier 2 credits and debits.* (1) Manufacturers that achieve fleet average NO_X values from the calculation in § 86.1860–04(f), lower than the applicable fleet average NO_X standard, may generate credits for a given model year, in units of vehicle-g/mi NO_X, determined in this equation:

[(Fleet Average NO_X Standard) − (Manufacturer's Fleet Average NO_X Value)] × (Total Number of Tier 2 Vehicles Sold, Including ZEVs and HEVs).

Where: The number of Tier 2 vehicles sold is based on the point of first sale and does not include vehicles sold in California or a state that adopts, and has in effect for that model year, California emission requirements.

(2) Where the result of the calculation in paragraph (b)(1) of this section is a negative number, the manufacturer must generate negative NO_X credits (debits).

(c) *Early banking.* (1)(i) Manufacturers may certify LDV/LLDTs to the Tier 2 FTP exhaust standards in § 86.1811–04 for model years 2001–2003 in order to bank credits for use in the 2004 and later model years. Such vehicles must also meet SFTP exhaust emission standards specified in § 86.1811–04.

(ii) Manufacturers may certify HLDT/MDPVs to the Tier 2 FTP exhaust standards in § 86.1811–04 for model years 2001–2007 in order to bank credits for use in the 2008 and later model years. Such vehicles must also meet applicable SFTP exhaust emission standards specified in § 86.1811–04.

(iii) This process is referred to as ''early banking'' and the resultant credits are referred to as ''early credits''. In order to bank early credits, a manufacturer must comply with all exhaust emission standards and requirements applicable to Tier 2 LDV/LLDTs and/or HLDT/MDPVs, as applicable, except as allowed under paragraph (c)(4) of this section.

(2) To generate early credits, a manufacturer must separately compute the sales weighted NO_X average of the LDV/LLDTs and HLDT/MDPVs it certifies to the Tier 2 exhaust requirements and separately compute credits using the calculations in this section and in § 86.1860–04.

(3) Early HLDT/MDPV credits may not be applied to LDV/LLDTs before the 2009 model year. Early LDV/LLDT credits may not be applied to HLDT/MDPVs before the 2009 model year.

(4) Manufacturers may generate early Tier 2 credits from LDVs, LDT1s and LDT2s that are certified to a full useful life of 100,000 miles, provided that the credits are prorated by a multiplicative factor of 0.833 (the quotient of 100,000/120,000). Where a manufacturer has both 100,000 and 120,000 mile full useful life vehicles for which it desires to bank early credits, it must compute the credits from each group of vehicles separately and then add them together.

(5) Manufacturers may bank early credits for later use to meet the Tier 2 fleet average NO_X standard or trade them to another manufacturer subject to the restriction in paragraph (c)(3) of this section.

(6) Early credits must not be used to comply with the fleet average NO_X standards for interim non-Tier 2 vehicles.

(7) Nothing in this section prevents the use of the NMOG values of 2003 and earlier model year LDV/LLDTs from being used in calculations of the NMOG fleet average and subsequent NMOG credit generation, under subpart R of this part.

(d) *Reporting and recordkeeping for Tier 2 NO_X credits including early credits.* Each manufacturer must comply with the reporting and recordkeeping requirements of § 86.1862–04.

(e) *Fleet average NO_X debits.* (1) Manufacturers must offset any debits for a given model year by the fleet average NO_X reporting deadline for the third model year following the model year in which the debits were generated as required in § 86.1860.04(e)(2). Manufacturers may offset debits by generating credits or acquiring credits generated by another manufacturer.

(2)(i) Failure to meet the requirements of paragraphs (a) through (d) of this section and of this paragraph (e), within the required timeframe for offsetting debits will be considered to be a failure to satisfy the conditions upon which the certificate(s) was issued and the individual noncomplying vehicles not covered by the certificate must be determined according to this section.

(ii) If debits are not offset within the specified time period, the number of vehicles not meeting the fleet average NO_X standards and not covered by the certificate must be calculated by dividing the total amount of debits for the model year by the fleet average NO_X standard applicable for the model year in which the debits were first incurred.

(iii) EPA will determine the vehicles for which the condition on the certificate was not satisfied by designating vehicles in those test groups with the highest certification NO_X emission values first and continuing until a number of vehicles equal to the calculated number of noncomplying vehicles as determined above is reached. If this calculation determines that only a portion of vehicles in a test group contribute to the debit situation, then EPA will designate actual vehicles in that test group as not covered by the certificate, starting with the last vehicle produced and counting backwards.

(3) If a manufacturer ceases production of LDV/Ts and MDPVs or is purchased by, merges with or otherwise combines with another manufacturer, the manufacturer continues to be responsible for offsetting any debits outstanding within the required time period. Any failure to offset the debits will be considered to be a violation of paragraph (e)(1) of this section and may subject the manufacturer to an enforcement action for sale of vehicles not covered by a certificate, pursuant to paragraph (e)(2) of this section.

(4) For purposes of calculating the statute of limitations, a violation of the requirements of paragraph (e)(1) of this section, a failure to satisfy the conditions upon which a certificate(s) was issued and hence a sale of vehicles not covered by the certificate, all occur upon the expiration of the deadline for offsetting debits specified in paragraph (e)(1) of this section.

(f) *NO_X credit transfers.* (1) EPA may reject NO_X credit transfers if the involved manufacturers fail to submit the credit transfer notification in the annual report.

(2) A manufacturer may not sell credits that are not available for sale pursuant to the provisions in paragraphs (a)(2) and (a)(7) of this section.

(3) In the event of a negative credit balance resulting from a transaction, both the buyer and seller are liable, except in cases involving fraud. EPA may void *ab initio* the certificates of conformity of all engine families participating in such a trade.

(4)(i) If a manufacturer transfers a credit that it has not generated pursuant to paragraph (b) of this section or acquired from another party, the manufacturer will be considered to have generated a debit in the model year that the manufacturer transferred the credit. The manufacturer must offset such debits by the deadline for the annual report for that same model year.

(ii) Failure to offset the debits within the required time period will be considered a failure to satisfy the conditions upon which the certificate(s) was issued and will be addressed pursuant to paragraph (e) of this section.

(g) *Interim non-Tier 2 NO_X credits and debits; Interim non-Tier 2 averaging, banking and trading.* Interim non-Tier 2 NO_X credits must be generated, calculated, tracked, averaged, banked, traded, accounted for and reported upon separately from Tier 2 credits. The provisions of this section applicable to Tier 2 NO_X credits and debits and Tier 2 averaging banking and trading are applicable to interim non-Tier 2 LDV/LLDTs and interim non-Tier 2 HLDT/MDPVs with the following exceptions:

(1) Provisions for early banking under paragraph (c) of this section do not apply.

(2) The fleet average NO_X standard used for calculating credits is 0.30 grams per mile for interim non-Tier 2 LDV/LLDTs and 0.20 g/mi for interim non-Tier 2 HLDT/MDPVs. (The interim non-Tier 2 NO_X standard of 0.30 (or 0.20) g/mi replaces 0.07 in the text and calculation in this section.)

(3) Interim non-Tier 2 NO_X credit deficits may be carried forward for three years subject to the requirements of § 86.1860–04(e).

[65 FR 6868, Feb. 10, 2000, as amended at 66 FR 19311, Apr. 13, 2001]

§ 86.1861–17 How do the NMOG + NO_X and evaporative emission credit programs work?

You may use emission credits for purposes of certification to show compliance with the applicable fleet-average NMOG + NO_X standards from §§ 86.1811 and 86.1816 and the fleet-average evaporative emission standards from § 86.1813 as described in 40 CFR part 1037, subpart H, with certain exceptions and clarifications as specified in this section. MDPVs are subject to the same provisions of this section that apply to LDT4.

(a) Calculate emission credits as described in this paragraph (a) instead of using the provisions of 40 CFR 1037.705. Calculate positive or negative emission credits relative to the applicable fleet-average standard. Calculate positive emission credits if your fleet-average level is below the standard. Calculate negative emission credits if your fleet-average value is above the standard. Calculate credits separately for each type of standard and for each averaging set. Calculate emission credits using the following equation, rounded to the nearest whole number:

$$\textit{Emission credit} = \textit{Volume} \cdot [\textit{Fleet average standard} - \textit{Fleet average value}]$$

Where:

Emission credit = The positive or negative credit for each discrete fleet-average standard, in units of vehicle-grams per mile for NMOG + NO_X and vehicle-grams per test for evaporative emissions.

Volume = Sales volume in a given model year from the collection of test groups or evaporative families covered by the fleet-average value, as described in § 86.1860.

(b) The following restrictions apply instead of those specified in 40 CFR 1037.740:

(1) Except as specified in paragraph (b)(2) of this section, emission credits may be exchanged only within an averaging set, as follows:

(i) HDV represent a separate averaging set with respect to all emission standards.

(ii) Except as specified in paragraph (b)(1)(iii) of this section, LDV and LDT represent a single averaging set with respect to all emission standards. Note that FTP and SFTP credits are not interchangeable.

(iii) LDV and LDT1 certified to standards based on a useful life of 120,000 miles and 10 years together represent a single averaging set with respect to NMOG + NO_X emission standards. Note that FTP and SFTP credits are not interchangeable.

(iv) The following separate averaging sets apply for evaporative emission standards:

(A) LDV and LDT1 together represent a single averaging set.

(B) LDT2 represents a single averaging set.

(C) HLDT represents a single averaging set.

(D) HDV represents a single averaging set.

(2) You may exchange evaporative emission credits across averaging sets as follows if you need additional credits to offset a deficit after the final year of maintaining deficit credits as allowed under paragraph (c) of this section:

(i) You may exchange LDV/LDT1 and LDT2 emission credits.

(ii) You may exchange HLDT and HDV emission credits.

(3) Except as specified in paragraph (b)(4) of this section, credits expire after five years. For example, credits you generate in model year 2018 may be used only through model year 2023.

(4) For the Tier 3 declining fleet-average FTP and SFTP emission standards for NMOG + NO_X described in § 86.1811–17(b)(8), credits generated in model years 2017 through 2024 expire after eight years, or after model year 2030, whichever comes first; however, these credits may not be traded after five years. This extended credit life also applies for small-volume manufacturers generating credits under § 86.1811–17(h)(1) in model years 2022 through 2024. Note that the longer credit life does not apply for heavy-duty vehicles, for vehicles certified under the alternate phase-in described in § 86.1811–17(b)(9), or for vehicles generating early Tier 3 credits under § 86.1811–17(b)(11) in model year 2017.

(c) The credit-deficit provisions 40 CFR 1037.745 apply to the NMOG + NO_X and evaporative emission standards for Tier 3 vehicles.

(d) The reporting and recordkeeping provisions of § 86.1862 apply instead of those specified in 40 CFR 1037.730 and 1037.735.

(e) The provisions of 40 CFR 1037.645 do not apply.

[79 FR 23735, Apr. 28, 2014]

§ 86.1862–04 Maintenance of records and submittal of information relevant to compliance with fleet-average standards.

(a) *Overview.* This section describes reporting and recordkeeping requirements for vehicles subject to the following standards:

(1) Tier 2 NO_X emission standard for LDV and LDT in § 86.1811–04.

(2) Tier 3 FTP emission standard for NMOG + NO_X for LDV and LDT in § 86.1811.

(3) Tier 3 SFTP emission standard for NMOG + NO_X for LDV and LDT (including MDPV) in § 86.1811.

(4) Tier 3 evaporative emission standards in § 86.1813.

(5) Tier 3 FTP emission standard for NMOG + NO_X for HDV (other than MDPV) in § 86.1816.

(6) Cold temperature NMHC standards in § 86.1811.

(b) *Maintenance of records.* (1) The manufacturer producing any vehicles subject to a fleet-average standard under this subpart must establish and maintain all the following information in organized and indexed records for each model year:

(i) Model year.

(ii) Applicable fleet-average standard.

(iii) Calculated fleet-average value.

(iv) All values used in calculating the fleet-average value achieved.

(2) The manufacturer producing any vehicle subject to the provisions in this section must keep all the following information for each vehicle:

(i) Model year.

(ii) Applicable fleet-average standard.

(iii) EPA test group or evaporative family, as applicable.

(iv) Assembly plant.

(v) Vehicle identification number.

(vi) The FEL and the fleet-average standard to which the vehicle is certified.

(vii) Information on the point of first sale, including the purchaser, city, and state.

(3) The manufacturer must retain all records required to be maintained under this section for a period of eight years from the due date for the annual report. Records may be stored in any format and on any media, as long as manufacturers can promptly send EPA organized written records in English if we ask for them. Manufacturers must keep records readily available as EPA may review them at any time.

(4) The Administrator may require the manufacturer to retain additional records or submit information not specifically required by this section.

(5) EPA may void ab initio a certificate of conformity for a vehicle certified to emission standards as set forth or otherwise referenced in this subpart for which the manufacturer fails to retain the records required in this section, to provide such information to the Administrator upon request, or to submit the reports required in this section in the specified time period.

(c) *Reporting*. (1) Each manufacturer must submit an annual report. Except as provided in paragraph (b)(2) of this section, the annual report must contain, for each applicable fleet average standard, the fleet average value achieved, all values required to calculate the fleet-average value, the number of credits generated or debits incurred, all the values required to calculate the credits or debits, and sufficient information to show compliance with all phase-in requirements, if applicable. The annual report must also contain the resulting balance of credits or debits.

(2) When a manufacturer calculates compliance with the fleet-average standard using the provisions in § 86.1860–04(c)(2) or § 86.1860–17(f), the annual report must state that the manufacturer has elected to use such provision and must contain the fleet-average standard as the fleet-average value for that model year.

(3) For each applicable fleet-average standard, the annual report must also include documentation on all credit transactions the manufacturer has engaged in since those included in the last report. Information for each transaction must include all the following information:

(i) Name of credit provider.

(ii) Name of credit recipient.

(iii) Date the transfer occurred.

(iv) Quantity of credits transferred.

(v) Model year in which the credits were earned.

(4) Unless a manufacturer reports the data required by this section in the annual production report required under § 86.1844–01(e) and subsequent model year provisions, a manufacturer must submit an annual report for each model year after production ends for all affected vehicles produced by the manufacturer subject to the provisions of this subpart and no later than May 1 of the calendar year following the given model year. Annual reports must be submitted to: Director, Compliance Division, U.S. Environmental Protection Agency, 2000 Traverwood, Ann Arbor, Michigan 48105.

(5) Failure by a manufacturer to submit the annual report in the specified time period for all vehicles subject to the provisions in this section is a violation of Clean Air Act section 203(a)(1) (42 U.S.C 7522(a)(1)) for each subject vehicle produced by that manufacturer.

(6) If EPA or the manufacturer determines that a reporting error occurred on an annual report previously submitted to EPA, the manufacturer's credit or debit calculations will be recalculated. EPA may void erroneous credits, unless transferred, and must adjust erroneous debits. In the case of transferred erroneous credits, EPA must adjust the selling manufacturer's credit or debit balance to reflect the sale of such credits and any resulting generation of debits.

(d) *Notice of opportunity for hearing*. Any voiding of the certificate under paragraph (a)(6) of this section will be made only after EPA has offered the manufacturer concerned an opportunity for a hearing conducted in accordance with 40 CFR part 1068, subpart G and, if a manufacturer requests such a hearing, will be made only after an initial decision by the Presiding Officer.

[79 FR 23735, Apr. 28, 2014, as amended at 81 FR 73992, Oct. 25, 2016]

§ 86.1863–07 Optional chassis certification for diesel vehicles.

This section does not apply for vehicles certified to the Tier 3 standards in § 86.1816–18, including those vehicles that certify to the Tier 3 standards before model year 2018.

(a) A manufacturer may optionally certify heavy-duty diesel vehicles 14,000 pounds GVWR or less to the standards specified in § 86.1816. Such vehicles must meet all the requirements of this subpart S that are applicable to Otto-cycle vehicles, except for evaporative, refueling, and OBD requirements where the diesel-specific OBD requirements would apply.

(b) For OBD, diesel vehicles optionally certified under this section are subject to the OBD requirements of § 86.1806.

(c) Diesel vehicles certified under this section may be tested using the test fuels, sampling systems, or analytical systems specified for diesel engines in subpart N of this part or in 40 CFR part 1065.

(d) Diesel vehicles optionally certified under this section to the standards of this subpart may not be included in any averaging, banking, or trading program for criteria emissions under this part.

(e) The provisions of § 86.004–40 apply to the engines in vehicles certified under this section.

(f) Diesel vehicles may be certified under this section to the standards applicable to model year 2008 in earlier model years.

(g) Diesel vehicles optionally certified under this section in model years 2007, 2008, or 2009 shall be included in phase-in calculations specified in § 86.007–11(g).

(h) [Reserved]

(i) Non-petroleum fueled complete vehicles subject to the standards and requirements of this part under § 86.016–01(d)(5) are subject to the provisions of this section applicable to diesel-fueled heavy-duty vehicles.

[76 FR 57379, Sept. 15, 2011, as amended at 79 FR 23736, Apr. 28, 2014; 81 FR 73992, Oct. 25, 2016]

§ 86.1864–10 How to comply with the fleet average cold temperature NMHC standards.

(a) *Applicability*. Cold temperature NMHC exhaust emission standards apply to the following vehicles, subject to the phase-in requirements in § 86.1811–10(g)(3) and (4):

(1) 2010 and later model year LDV/LLDTs.

(2) 2012 and later model year HLDT/MDPVs.

(3) [Reserved]

(4) Vehicles imported by ICIs as defined in 40 CFR 85.1502.

(b) *Useful life requirements*. Full useful life requirements for cold temperature NMHC standards are defined in § 86.1805–04(g). There is not an intermediate useful life standard for cold temperature NMHC standards.

(c) *Altitude*. Altitude requirements for cold temperature NMHC standards are provided in § 86.1810–09(f).

(d) *Small volume manufacturer certification procedures*. Certification procedures for small volume manufacturers are provided in § 86.1838–01.

(e) *Cold temperature NMHC standards*. Fleet average cold temperature NMHC standards are provided in § 86.1811–10(g)(2).

(f) *Phase-in*. Phase-in of the cold temperature NMHC standards are provided in § 86.1811–10(g)(3) and (4).

(g) *Phase-in flexibilities for small volume manufacturers*. Phase-in flexibilities for small volume manufacturer compliance with the cold temperature NMHC standards are provided in § 86.1811–04(k)(5).

(h) *Hardship provisions for small volume manufacturers*. Hardship provisions for small volume manufacturers related to the cold temperature NMHC standards are provided in § 86.1811–04(q)(1).

(i) *In-use standards for applicable phase-in models*. In-use cold temperature NMHC standards for applicable phase-in models are provided in § 86.1811–10(u).

(j) *Durability procedures and method of determining deterioration factors (DFs)*. The durability data vehicle selection procedures of § 86.1822–01 and the durability demonstration procedures of § 86.1823–06 apply for cold temperature NMHC standards. For determining

compliance with full useful life cold temperature NMHC emission standards, the 68–86 °F, 120,000 mile full useful life NMOG DF may be used.

(k) *Vehicle test procedure.* (1) The test procedure for demonstrating compliance with cold temperature NMHC standards is contained in subpart C of this part. With prior EPA approval, alternative testing procedures may be used, as specified in § 86.106–96(a), provided cold temperature NMHC emissions test results are equivalent or superior.

(2) Testing of all LDVs, LDTs and MDPVs to determine compliance with cold temperature NMHC exhaust emission standards set forth in this section must be on a loaded vehicle weight (LVW) basis, as defined in § 86.1803–01.

(3) Testing for the purpose of providing certification data is required only at low altitude conditions and only for vehicles that can operate on gasoline, except as requested in §§ 86.1810–09(f) and 86.1844–01(d)(11). If hardware and software emission control strategies used during low altitude condition testing are not used similarly across all altitudes for in-use operation, the manufacturer must include a statement in the application for certification, in accordance with §§ 86.1844–01(d)(11) and 86.1810–09(f), stating what the different strategies are and why they are used. If hardware and software emission control strategies used during testing with gasoline are not used similarly with all fuels that can be used in multi-fuel vehicles, the manufacturer will include a statement in the application for certification, in accordance with §§ 86.1844–01(d)(11) and 86.1810–09(f), stating what the different strategies are and why they are used. For example, unless a manufacturer states otherwise, air pumps used to control emissions on dedicated gasoline vehicles or multi-fuel vehicles during low altitude conditions must also be used to control emissions at high altitude conditions, and software used to control emissions or closed loop operation must also operate similarly at low and high altitude conditions and similarly when multi-fueled vehicles are operated on gasoline and alternate fuels. These examples are for illustrative purposes only; similar strategies would apply to other currently used emission control technologies and/or emerging or future technologies.

(l) *Emission data vehicle (EDV) selection.* Provisions for selecting the appropriate EDV for the cold temperature NMHC standards are provided in §§ 86.1828–10(g) and 86.1829–01(b)(3).

(m) *Calculating the fleet average cold temperature NMHC standard.* Manufacturers must compute separate sales-weighted fleet average cold temperature NMHC emissions at the end of the model year for LDV/LLDTs and HLDT/MDPVs, using actual sales, and certifying test groups to FELs, as defined in § 86.1803–01. The FEL becomes the standard for each test group, and every test group can have a different FEL. The certification resolution for the FEL will be 0.1 grams/mile. LDVs and LLDTs must be grouped together when calculating the fleet average, and HLDTs and MDPVs must also be grouped together to determine the fleet average. Manufacturers must compute the sales-weighted cold temperature NMHC fleet averages using the following equation, rounded to the nearest 0.1 grams/mile:

Fleet average cold temperature NMHC exhaust emissions (grams/mile) = $\Sigma(N \times FEL) \div$ Total number of vehicles sold of the applicable weight category (i.e., either LDV + LLDTs, or HLDT + MDPVs)

Where:

N = The number of LDVs and LLDTs, or HLDTs and MDPVs, sold within the applicable FEL, based on vehicles counted to the point of first sale.

FEL = Family Emission Limit (grams/mile).

(n) *Certification compliance and enforcement requirements for cold temperature NMHC standards.* (1) Compliance and enforcement requirements are provided in § 86.1864–10 and § 86.1848–10(c)(8).

(2) The certificate issued for each test group requires all vehicles within that test group to meet the emission standard or FEL to which the vehicles were certified.

(3) Each manufacturer must comply with the applicable cold temperature NMHC fleet average standard on a sales-weighted average basis, at the end of each model year, using the procedure described in paragraph (m) of this section.

(4) During a phase-in year, the manufacturer must comply with the applicable cold temperature NMHC fleet average standard for the required phase-in percentage for that year as specified in § 86.1811–10(g)(3) or (4).

(5) Manufacturers must compute separate cold temperature NMHC fleet averages for LDV/LLDTs and HLDT/MDPVs. The sales-weighted cold temperature NMHC fleet averages must be compared with the applicable fleet average standard.

(6) Each manufacturer must comply on an annual basis with the fleet average standards as follows:

(i) Manufacturers must report in their annual reports to the Agency that they met the relevant corporate average standard by showing that their sales-weighted average cold temperature NMHC emissions of LDV/LLDTs and HLDT/MDPVs, as applicable, are at or below the applicable fleet average standard;

(ii) If the sales-weighted average is above the applicable fleet average standard, manufacturers must obtain and apply sufficient NMHC credits as permitted under paragraph (o)(8) of this section. A manufacturer must show via the use of credits that they have offset any exceedence of the corporate average standard. Manufacturers must also include their credit balances or deficits.

(iii) If a manufacturer fails to meet the corporate average cold temperature NMHC standard for two consecutive years, the vehicles causing the corporate average exceedence will be considered not covered by the certificate of conformity (see paragraph (o)(8) of this section). A manufacturer will be subject to penalties on an individual-vehicle basis for sale of vehicles not covered by a certificate.

(iv) EPA will review each manufacturer's sales to designate the vehicles that caused the exceedence of the corporate average standard. EPA will designate as nonconforming those vehicles in test groups with the highest certification emission values first, continuing until reaching a number of vehicles equal to the calculated number of noncomplying vehicles as determined above. In a group where only a portion of vehicles would be deemed nonconforming, EPA will determine the actual nonconforming vehicles by counting backwards from the last vehicle produced in that test group. Manufacturers will be liable for penalties for each vehicle sold that is not covered by a certificate.

(o) *Requirements for the cold temperature NMHC averaging, banking and trading (ABT) program.* (1) Manufacturers must average the cold temperature NMHC emissions of their vehicles and comply with the cold temperature NMHC fleet average corporate standard. Manufacturers may generate credits during and after the phase-in period. Manufacturers may generate credits prior to the phase-in periods as described in paragraph (o)(5) of this section. A manufacturer whose cold temperature NMHC fleet average emissions exceed the applicable standard must complete the calculation in paragraph (o)(4) of this section to determine the size of its NMHC credit deficit. A manufacturer whose cold temperature NMHC fleet average emissions are less than the applicable standard must complete the calculation in paragraph (o)(4) of this section to generate NMHC credits.

(2) There are no property rights associated with NMHC credits generated under this subpart. Credits are a limited authorization to emit the designated amount of emissions. Nothing in this part or any other provision of law should be construed to limit EPA's authority to terminate or limit this authorization through a rulemaking.

(3) Each manufacturer must comply with the reporting and recordkeeping requirements of paragraph (p) of this section for NMHC credits, including early credits. The averaging, banking and trading program is enforceable through the certificate of conformity that allows the manufacturer to introduce any regulated vehicles into commerce.

(4) Credits are earned on the last day of the model year. Manufacturers must calculate, for a given model year, the number of credits or debits it has generated according to the following equation, rounded to the nearest 0.1 grams/mile:

NMHC Credits or Debits = (Cold Temperature NMHC Standard—Manufacturer's Sales-Weighted Fleet Average Cold Temperature NMHC Emissions) × (Total Number of Vehicles Sold)

Where:

Cold Temperature NMHC Standard = 0.3 grams/mile for LDV/LLDTs or 0.5 grams/mile for HLDT/MDPV, per § 86.1811–10(g)(2).

Manufacturer's Sales-Weighted Fleet Average Cold Temperature NMHC Emissions = average calculated according to paragraph (m) of this section.

Total Number of Vehicles Sold = Total 50-State sales based on the point of first sale.

(5) The following provisions apply for early banking:

(i) Manufacturers may certify LDV/LLDTs to the cold temperature NMHC exhaust standards in § 86.1811–10(g)(2) for model years 2008–2009 to bank credits for use in the 2010 and later model years. Manufacturers may certify HLDT/MDPVs to the cold temperature NMHC exhaust standards in § 86.1811–10(g)(2) for model years 2010–2011 to bank credits for use in the 2012 and later model years.

(ii) This process is referred to as ''early banking'' and the resultant credits are referred to as ''early credits.'' To bank early credits, a manufacturer must comply with all exhaust emission standards and requirements applicable to LDV/LLDTs and/or HLDT/MDPVs. To generate early credits, a manufacturer must separately compute the sales-weighted cold temperature NMHC average of the LDV/LLDTs and HLDT/MDPVs it certifies to the exhaust requirements and separately compute credits using the calculations in paragraph (o)(4) of this section. Early HLDT/MDPV credits may not be applied to LDV/LLDTs before the 2010 model year. Early LDV/LLDT credits may not be applied to HLDT/ MDPV before the 2012 model year.

(6) NMHC credits are not subject to any discount or expiration date except as required under the deficit carryforward provisions of paragraph (o)(8) of this section. There is no discounting of unused credits. NMHC credits have unlimited lives, subject to the limitations of paragraph (o)(2) of this section.

(7) Credits may be used as follows:

(i) Credits generated and calculated according to the method in paragraph (o)(4) of this section may be used only to offset deficits accrued with respect to the standard in § 86.1811–10(g)(2). Credits may be banked and used in a future model year in which a manufacturer's average cold temperature NMHC level exceeds the applicable standard. Credits may be exchanged between the LDT/LLDT and HLDT/MDPV fleets of a given manufacturer. Credits may also be traded to another manufacturer according to the provisions in paragraph (o)(9) of this section. Before trading or carrying over credits to the next model year, a manufacturer must apply available credits to offset any credit deficit, where the deadline to offset that credit deficit has not yet passed.

(ii) The use of credits shall not be permitted to address Selective Enforcement Auditing or in-use testing failures. The enforcement of the averaging standard occurs through the vehicle's certificate of conformity. A manufacturer's certificate of conformity is conditioned upon compliance with the averaging provisions. The certificate will be void ab initio if a manufacturer fails to meet the corporate average standard and does not obtain appropriate credits to cover its shortfalls in that model year or in the subsequent model year (see deficit carryforward provision in paragraph (o)(8) of this section). Manufacturers must track their certification levels and sales unless they produce only vehicles certified to cold temperature NMHC levels below the standard and do not plan to bank credits.

(8) The following provisions apply if debits are accrued:

(i) If a manufacturer calculates that it has negative credits (also called ''debits'' or a ''credit deficit'') for a given model year, it may carry that deficit forward into the next model year. Such a carry-forward may only occur after the manufacturer exhausts any supply of banked credits. At the end of that next model year, the deficit must be covered with an appropriate

number of credits that the manufacturer generates or purchases. Any remaining deficit is subject to an enforcement action, as described in this paragraph (o)(8). Manufacturers are not permitted to have a credit deficit for two consecutive years.

(ii) If debits are not offset within the specified time period, the number of vehicles not meeting the fleet average cold temperature NMHC standards (and therefore not covered by the certificate) must be calculated by dividing the total amount of debits for the model year by the fleet average cold temperature NMHC standard applicable for the model year in which the debits were first incurred.

(iii) EPA will determine the number of vehicles for which the condition on the certificate was not satisfied by designating vehicles in those test groups with the highest certification cold temperature NMHC emission values first and continuing until reaching a number of vehicles equal to the calculated number of noncomplying vehicles as determined above. If this calculation determines that only a portion of vehicles in a test group contribute to the debit situation, then EPA will designate actual vehicles in that test group as not covered by the certificate, starting with the last vehicle produced and counting backwards.

(iv)(A) If a manufacturer ceases production of LDV/LLDTs and HLDT/MDPVs, the manufacturer continues to be responsible for offsetting any debits outstanding within the required time period. Any failure to offset the debits will be considered a violation of paragraph (o)(8)(i) of this section and may subject the manufacturer to an enforcement action for sale of vehicles not covered by a certificate, pursuant to paragraphs (o)(8)(ii) and (iii) of this section.

(B) If a manufacturer is purchased by, merges with, or otherwise combines with another manufacturer, the controlling entity is responsible for offsetting any debits outstanding within the required time period. Any failure to offset the debits will be considered a violation of paragraph (o)(8)(i) of this section and may subject the manufacturer to an enforcement action for sale of vehicles not covered by a certificate, pursuant to paragraphs (o)(8)(ii) and (iii) of this section.

(v) For purposes of calculating the statute of limitations, a violation of the requirements of paragraph (o)(8)(i) of this section, a failure to satisfy the conditions upon which a certificate(s) was issued and hence a sale of vehicles not covered by the certificate, all occur upon the expiration of the deadline for offsetting debits specified in paragraph (o)(8)(i) of this section.

(9) The following provisions apply to NMHC credit trading:

(i) EPA may reject NMHC credit trades if the involved manufacturers fail to submit the credit trade notification in the annual report. A manufacturer may not sell credits that are not available for sale pursuant to the provisions in paragraphs (o)(7)(i) of this section.

(ii) In the event of a negative credit balance resulting from a transaction that a manufacturer could not cover by the reporting deadline for the model year in which the trade occurred, both the buyer and seller are liable, except in cases involving fraud. EPA may void ab initio the certificates of conformity of all engine families participating in such a trade.

(iii) A manufacturer may only trade credits that it has generated pursuant to paragraph (o)(4) of this section or acquired from another party.

(p) *Reporting and recordkeeping*. Keep records and submit information for demonstrating compliance with the fleet average cold temperature NMHC standard as described in § 86.1862–04.

[72 FR 8567, Feb. 26, 2007, as amended at 76 FR 19874, Apr. 8, 2011; 79 FR 23736, Apr. 28, 2014]

§ 86.1865–12 How to comply with the fleet average CO_2 standards.

(a) *Applicability*. (1) Unless otherwise exempted under the provisions of paragraph (d) of this section, CO_2 fleet average exhaust emission standards of this subpart apply to:

(i) 2012 and later model year passenger automobiles and light trucks.

(ii) Heavy-duty vehicles subject to standards under § 86.1819.

(iii) Vehicles imported by ICIs as defined in 40 CFR 85.1502.

(2) The terms ''passenger automobile'' and ''light truck'' as used in this section have the meanings given in § 86.1818–12.

(b) *Useful life requirements.* Full useful life requirements for CO_2 standards are defined in §§ 86.1818 and 86.1819. There is not an intermediate useful life standard for CO_2 emissions.

(c) *Altitude.* Greenhouse gas emission standards apply for testing at both low-altitude conditions and at high-altitude conditions, as described in §§ 86.1818 and 86.1819.

(d) *Small volume manufacturer certification procedures.* (1) *Passenger automobiles and light trucks.* Certification procedures for small volume manufacturers are provided in § 86.1838. Small businesses meeting certain criteria may be exempted from the greenhouse gas emission standards in § 86.1818 according to the provisions of § 86.1801–12(j) or (k).

(2) *Heavy-duty vehicles.* HDV manufacturers that qualify as small businesses are not subject to the Phase 1 greenhouse gas standards of this subpart as specified in § 86.1819–14(k)(5).

(e) *CO_2 fleet average exhaust emission standards.* The fleet average standards referred to in this section are the corporate fleet average CO_2 standards for passenger automobiles and light trucks set forth in § 86.1818–12(c) and (e), and for HDV in § 86.1819. Each manufacturer must comply with the applicable CO_2 fleet average standard on a production-weighted average basis, for each separate averaging set, at the end of each model year, using the procedure described in paragraph (j) of this section. The fleet average CO_2 standards applicable in a given model year are calculated separately for passenger automobiles and light trucks for each manufacturer and each model year according to the provisions in § 86.1818. Calculate the HDV fleet average CO_2 standard in a given model year as described in § 86.1819–14(a).

(f) *In-use CO_2 standards.* In-use CO_2 exhaust emission standards are provided in § 86.1818–12(d) for passenger automobiles and light trucks and in § 86.1819–14(b) for HDV.

(g) *Durability procedures and method of determining deterioration factors (DFs).* Deterioration factors for CO_2 exhaust emission standards are provided in § 86.1823–08(m) for passenger automobiles and light trucks and in § 86.1819–14(d)(5) for HDV.

(h) *Vehicle test procedures.* (1) The test procedures for demonstrating compliance with CO_2 exhaust emission standards are described at § 86.101 and 40 CFR part 600, subpart B.

(2) Testing to determine compliance with CO_2 exhaust emission standards must be on a loaded vehicle weight (LVW) basis for passenger automobiles and light trucks (including MDPV), and on an adjusted loaded vehicle weight (ALVW) basis for non-MDPV heavy-duty vehicles.

(3) Testing for the purpose of providing certification data is required only at low-altitude conditions. If hardware and software emission control strategies used during low-altitude condition testing are not used similarly across all altitudes for in-use operation, the manufacturer must include a statement in the application for certification, in accordance with § 86.1844–01(d)(11), stating what the different strategies are and why they are used.

(i) *Calculating fleet average carbon-related exhaust emissions for passenger automobiles and light trucks.* (1) Manufacturers must compute separate production-weighted fleet average carbon-related exhaust emissions at the end of the model year for passenger automobiles and light trucks, using actual production, where production means vehicles produced and delivered for sale, and certifying model types to standards as defined in § 86.1818–12. The model type carbon-related exhaust emission results determined according to 40 CFR part 600, subpart F (in units of grams per mile rounded to the nearest whole number) become the certification standard for each model type.

(2) Manufacturers must separately calculate production-weighted fleet average carbon-related exhaust emissions levels for the following averaging sets according to the provisions of 40 CFR part 600, subpart F:

(i) Passenger automobiles subject to the fleet average CO_2 standards specified in § 86.1818–12(c)(2);

(ii) Light trucks subject to the fleet average CO_2 standards specified in § 86.1818–12(c)(3);

(iii) Passenger automobiles subject to the Temporary Leadtime Allowance Alternative Standards specified in § 86.1818–12(e), if applicable; and

(iv) Light trucks subject to the Temporary Leadtime Allowance Alternative Standards specified in § 86.1818–12(e), if applicable.

(j) *Certification compliance and enforcement requirements for CO 2 exhaust emission standards.*

(1) Compliance and enforcement requirements are provided in this section and § 86.1848–10(c)(9).

(2) The certificate issued for each test group requires all model types within that test group to meet the in-use emission standards to which each model type is certified. The in-use standards for passenger automobiles and light duty trucks (including MDPV) are described in § 86.1818–12(d). The in-use standards for non-MDPV heavy-duty vehicles are described in § 86.1819–14(b).

(3) Each manufacturer must comply with the applicable CO_2 fleet average standard on a production-weighted average basis, at the end of each model year. Use the procedure described in paragraph (i) of this section for passenger automobiles and light trucks (including MDPV). Use the procedure described in § 86.1819–14(d)(9)(iv) for non-MDPV heavy-duty vehicles.

(4) Each manufacturer must comply on an annual basis with the fleet average standards as follows:

(i) Manufacturers must report in their annual reports to the Agency that they met the relevant corporate average standard by showing that the applicable production-weighted average CO_2 emission levels are at or below the applicable fleet average standards; or

(ii) If the production-weighted average is above the applicable fleet average standard, manufacturers must obtain and apply sufficient CO_2 credits as authorized under paragraph (k)(8) of this section. A manufacturer must show that they have offset any exceedance of the corporate average standard via the use of credits. Manufacturers must also include their credit balances or deficits in their annual report to the Agency.

(iii) If a manufacturer fails to meet the corporate average CO_2 standard for four consecutive years, the vehicles causing the corporate average exceedance will be considered not covered by the certificate of conformity (*see* paragraph (k)(8) of this section). A manufacturer will be subject to penalties on an individual-vehicle basis for sale of vehicles not covered by a certificate.

(iv) EPA will review each manufacturer's production to designate the vehicles that caused the exceedance of the corporate average standard. EPA will designate as nonconforming those vehicles in test groups with the highest certification emission values first, continuing until reaching a number of vehicles equal to the calculated number of noncomplying vehicles as determined in paragraph (k)(8) of this section. In a group where only a portion of vehicles would be deemed nonconforming, EPA will determine the actual nonconforming vehicles by counting backwards from the last vehicle produced in that test group. Manufacturers will be liable for penalties for each vehicle sold that is not covered by a certificate.

(k) *Requirements for the CO_2 averaging, banking and trading (ABT) program.* (1) A manufacturer whose CO_2 fleet average emissions exceed the applicable standard must complete the calculation in paragraph (k)(4) of this section to determine the size of its CO_2 deficit. A manufacturer whose CO_2 fleet average emissions are less than the applicable standard may complete the calculation in paragraph (k)(4) of this section to generate CO_2 credits. In either case, the number of credits or debits must be rounded to the nearest whole number.

(2) There are no property rights associated with CO_2 credits generated under this subpart. Credits are a limited authorization to emit the designated amount of emissions. Nothing in this part or any other provision of law should be construed to limit EPA's authority to terminate or limit this authorization through a rulemaking.

(3) Each manufacturer must comply with the reporting and recordkeeping requirements of paragraph (l) of this section for CO_2 credits, including early

credits. The averaging, banking and trading program is enforceable through the certificate of conformity that allows the manufacturer to introduce any regulated vehicles into U.S. commerce.

(4) Credits are earned on the last day of the model year. Manufacturers must calculate, for a given model year and separately for passenger automobiles, light trucks, and heavy-duty vehicles, the number of credits or debits it has generated according to the following equation rounded to the nearest megagram:

$$CO_2\ Credits\ or\ Debits\ (\mathrm{Mg}) = [(CO_2\ Standard - Manufacturer's\ Production\text{-}Weighted\ Fleet\ Average\ CO_2\ Emissions) \times (Total\ Number\ of\ Vehicles\ Produced) \times (Mileage)] \div 1{,}000{,}000$$

Where:

CO_2 Standard = the applicable standard for the model year as determined in § 86.1818 or § 86.1819;

Manufacturer's Production-Weighted Fleet Average CO_2 Emissions = average calculated according to paragraph (i) of this section;

Total Number of Vehicles Produced = the number of vehicles domestically produced plus those imported as defined in § 600.511–08 of this chapter; and

Mileage = useful life value (in miles) for HDV, and vehicle lifetime miles of 195,264 for passenger automobiles and 225,865 for light trucks.

(5) Determine total HDV debits and credits for a model year as described in § 86.1819–14(d)(6). Determine total passenger car and light truck debits and credits for a model year as described in this paragraph (k)(5). Total credits or debits generated in a model year, maintained and reported separately for passenger automobiles and light trucks, shall be the sum of the credits or debits calculated in paragraph (k)(4) of this section and any of the following credits, if applicable, minus any CO_2-equivalent debits for N_2O and/or CH_4 calculated according to the provisions of § 86.1818–12(f)(4):

(i) Air conditioning leakage credits earned according to the provisions of § 86.1867–12(b).

(ii) Air conditioning efficiency credits earned according to the provisions of § 86.1868–12(c).

(iii) Off-cycle technology credits earned according to the provisions of § 86.1869–12(d).

(iv) Full size pickup truck credits earned according to the provisions of § 86.1870–12(c).

(v) Advanced technology vehicle credits earned according to the provisions of § 86.1866–12(b)(3).

(vi) CO_2-equivalent debits for N_2O and/or CH_4 accumulated according to the provisions of § 86.1818–12(f)(4).

(6) Unused CO_2 credits generally retain their full value through five model years after the model year in which they were generated. Credits remaining at the end of the fifth model year after the model year in which they were generated may not be used to demonstrate compliance for later model years. The following particular provisions apply for passenger cars and light trucks:

(i) Unused CO_2 credits from the 2009 model year shall retain their full value through the 2014 model year. Credits from the 2009 model year that remain at the end of the 2014 model year may not be used to demonstrate compliance for later model years.

(ii) Unused CO_2 credits from the 2010 through 2015 model years shall retain their full value through the 2021 model year. Credits remaining from these model years at the end of the 2021 model year may not be used to demonstrate compliance for later model years.

(7) Credits may be used as follows:

(i) Credits generated and calculated according to the method in paragraphs (k)(4) and (5) of this section may not be used to offset deficits other than those deficits accrued within the respective averaging set, except that credits may be transferred between the passenger automobile and light truck fleets of a given manufacturer. Credits may be banked and used in a future model year in which a manufacturer's average CO_2 level exceeds the applicable standard. Credits may also be traded to another manufacturer according to the provisions in paragraph (k)(8) of this section. Before trading or carrying over credits to the next model year, a manufacturer must apply available credits to offset any deficit, where the deadline to offset that credit deficit has not yet passed. This paragraph (k)(7)(i) applies for MDPV, but not for other HDV.

(ii) The use of credits shall not change Selective Enforcement Auditing or in-use testing failures from a failure to a non-failure. The enforcement of the averaging standard occurs through the vehicle's certificate of conformity as described in paragraph (k)(8) of this section. A manufacturer's certificate of conformity is conditioned upon compliance with the averaging provisions. The certificate will be void ab initio if a manufacturer fails to meet the corporate average standard and does not obtain appropriate credits to cover its shortfalls in that model year or subsequent model years (see deficit carry-forward provisions in paragraph (k)(8) of this section).

(iii) The following provisions apply for passenger automobiles and light trucks under the Temporary Leadtime Allowance Alternative Standards:

(A) Credits generated by vehicles subject to the fleet average CO_2 standards specified in § 86.1818–12(c) may only be used to offset a deficit generated by vehicles subject to the Temporary Leadtime Allowance Alternative Standards specified in § 86.1818–12(e).

(B) Credits generated by a passenger automobile or light truck averaging set subject to the Temporary Leadtime Allowance Alternative Standards specified in § 86.1818–12(e)(4)(i) or (ii) may be used to offset a deficit generated by an averaging set subject to the Temporary Leadtime Allowance Alternative Standards through the 2015 model year, except that manufacturers qualifying under the provisions of § 86.1818–12(e)(3) may use such credits to offset a deficit generated by an averaging set subject to the Temporary Leadtime Allowance Alternative Standards through the 2016 model year.

(C) Credits generated by an averaging set subject to the Temporary Leadtime Allowance Alternative Standards specified in § 86.1818–12(e)(4)(i) or (ii) of this section may not be used to offset a deficit generated by an averaging set subject to the fleet average CO_2 standards specified in § 86.1818–12(c)(2) or (3) or otherwise transferred to an averaging set subject to the fleet average CO_2 standards specified in § 86.1818–12(c)(2) or (3).

(D) Credits generated by vehicles subject to the Temporary Leadtime Allowance Alternative Standards specified in § 86.1818–12(e)(4)(i) or (ii) may be banked for use in a future model year (to offset a deficit generated by an averaging set subject to the Temporary Leadtime Allowance Alternative Standards). All such credits may not be used to demonstrate compliance for model year 2016 and later vehicles, except that manufacturers qualifying under the provisions of § 86.1818–12(e)(3) may use such credits to offset a deficit generated by an averaging set subject to the Temporary Leadtime Allowance Alternative Standards through the 2016 model year.

(E) A manufacturer with any vehicles subject to the Temporary Leadtime Allowance Alternative Standards specified in § 86.1818–12(e)(4)(i) or (ii) of this section in a model year in which that manufacturer also generates credits with vehicles subject to the fleet average CO_2 standards specified in § 86.1818–12(c) may not trade or bank credits earned against the fleet average standards in § 86.1818–12(c) for use in a future model year.

(iv) Credits generated in the 2017 through 2020 model years under the provisions of § 86.1818–12(e)(3)(ii) may not be traded or otherwise provided to another manufacturer.

(v) Credits generated under any alternative fleet average standards approved under § 86.1818–12(g) may not be traded or otherwise provided to another manufacturer.

(8) The following provisions apply if a manufacturer calculates that it has negative credits (also called ''debits'' or a ''credit deficit'') for a given model year:

(i) The manufacturer may carry the credit deficit forward into the next three model years. Such a carry-forward may only occur after the manufacturer exhausts any supply of banked credits. The deficit must be covered with an appropriate number of credits that the manufacturer generates or purchases by the end of the third model year. Any remaining deficit is subject to a voiding of the certificate ab initio, as described in this paragraph (k)(8). Manufacturers are not permitted to have a credit deficit for four consecutive years.

(ii) If the credit deficit is not offset within the specified time period, the number of vehicles not meeting the fleet average CO_2 standards (and therefore not covered by the certificate) must be calculated.

(A) Determine the negative credits for the noncompliant vehicle category by multiplying the total megagram deficit by 1,000,000 and then dividing by the mileage specified in paragraph (k)(4) of this section.

(B) Divide the result by the fleet average standard applicable to the model year in which the debits were first incurred and round to the nearest whole number to determine the number of vehicles not meeting the fleet average CO_2 standards.

(iii) EPA will determine the vehicles not covered by a certificate because the condition on the certificate was not satisfied by designating vehicles in those test groups with the highest carbon-related exhaust emission values first and continuing until reaching a number of vehicles equal to the calculated number of non-complying vehicles as determined in this paragraph (k)(8). The same approach applies for HDV, except that EPA will make these designations by ranking test groups based on CO_2 emission values. If these calculations determines that only a portion of vehicles in a test group contribute to the debit situation, then EPA will designate actual vehicles in that test group as not covered by the certificate, starting with the last vehicle produced and counting backwards.

(iv)(A) If a manufacturer ceases production of passenger automobiles, light trucks, or heavy-duty vehicles, the manufacturer continues to be responsible for offsetting any debits outstanding within the required time period. Any failure to offset the debits will be considered a violation of paragraph (k)(8)(i) of this section and may subject the manufacturer to an enforcement action for sale of vehicles not covered by a certificate, pursuant to paragraphs (k)(8)(ii) and (iii) of this section.

(B) If a manufacturer is purchased by, merges with, or otherwise combines with another manufacturer, the controlling entity is responsible for offsetting any debits outstanding within the required time period. Any failure to offset the debits will be considered a violation of paragraph (k)(8)(i) of this section and may subject the manufacturer to an enforcement action for sale of vehicles not covered by a certificate, pursuant to paragraphs (k)(8)(ii) and (iii) of this section.

(v) For purposes of calculating the statute of limitations, a violation of the requirements of paragraph (k)(8)(i) of this section, a failure to satisfy the conditions upon which a certificate(s) was issued and hence a sale of vehicles not covered by the certificate, all occur upon the expiration of the deadline for offsetting debits specified in paragraph (k)(8)(i) of this section.

(9) The following provisions apply to CO_2 credit trading:

(i) EPA may reject CO_2 credit trades if the involved manufacturers fail to submit the credit trade notification in the annual report.

(ii) A manufacturer may not sell credits that are no longer valid for demonstrating compliance based on the model years of the subject vehicles, as specified in paragraph (k)(6) of this section.

(iii) In the event of a negative credit balance resulting from a transaction, both the buyer and seller are liable for the credit shortfall. EPA may void ab initio the certificates of conformity of all test groups that generate or use credits in such a trade.

(iv)(A) If a manufacturer trades a credit that it has not generated pursuant to this paragraph (k) or acquired from another party, the manufacturer will be considered to have generated a debit in the model year that the manufacturer traded the credit. The manufacturer must offset such debits by the deadline for the annual report for that same model year.

(B) Failure to offset the debits within the required time period will be considered a failure to satisfy the conditions upon which the certificate(s) was issued and will be addressed pursuant to paragraph (k)(8) of this section.

(v) A manufacturer may only trade credits that it has generated pursuant to paragraphs (k)(4) and (5) of this section or acquired from another party.

(l) *Maintenance of records and submittal of information relevant to compliance with fleet average CO_2 standards*—(1) *Maintenance of records.* (i) Manufacturers producing any light-duty vehicles, light-duty trucks, medium-duty passenger vehicles, or other heavy-duty vehicles subject to the provisions in this subpart must establish, maintain, and retain all the following information in adequately organized records for each model year:

(A) Model year.

(B) Applicable fleet average CO_2 standards for each averaging set as defined in paragraph (i) of this section.

(C) The calculated fleet average CO_2 value for each averaging set as defined in paragraph (i) of this section.

(D) All values used in calculating the fleet average CO_2 values.

(ii) Manufacturers must establish, maintain, and retain all the following information in adequately organized records for each vehicle produced that is subject to the provisions in this subpart:

(A) Model year.

(B) Applicable fleet average CO_2 standard.

(C) EPA test group.

(D) Assembly plant.

(E) Vehicle identification number.

(F) Carbon-related exhaust emission standard (automobile and light truck only), N_2O emission standard, and CH_4 emission standard to which the vehicle is certified.

(G) In-use carbon-related exhaust emission standard for passenger automobiles and light truck, and in-use CO_2 standard for HDV.

(H) Information on the point of first sale, including the purchaser, city, and state.

(iii) Manufacturers must retain all required records for a period of eight years from the due date for the annual report. Records may be stored in any format and on any media, as long as manufacturers can promptly send EPA organized written records in English if requested by the Administrator. Manufacturers must keep records readily available as EPA may review them at any time.

(iv) The Administrator may require the manufacturer to retain additional records or submit information not specifically required by this section.

(v) Pursuant to a request made by the Administrator, the manufacturer must submit to the Administrator the information that the manufacturer is required to retain.

(vi) EPA may void ab initio a certificate of conformity for vehicles certified to emission standards as set forth or otherwise referenced in this subpart for which the manufacturer fails to retain the records required in this section or to provide such information to the Administrator upon request, or to submit the reports required in this section in the specified time period.

(2) *Reporting.* (i) Each manufacturer must submit an annual report. The annual report must contain for each applicable CO_2 standard, the calculated fleet average CO_2 value, all values required to calculate the CO_2 emissions value, the number of credits generated or debits incurred, all the values required to calculate the credits or debits, and the resulting balance of credits or debits. For each applicable alternative N_2O and/or CH_4 standard selected under the provisions of § 86.1818–12(f)(3) for passenger automobiles and light trucks (or § 86.1819–14(c) for HDV), the report must contain the CO_2-equivalent debits for N_2O and/or CH_4 calculated according to § 86.1818–12(f)(4) (or § 86.1819–14(c) for HDV) for each test group and all values required to calculate the number of debits incurred.

(ii) For each applicable fleet average CO_2 standard, the annual report must also include documentation on all credit transactions the manufacturer has engaged in since those included in the last report. Information for each transaction must include all of the following:

(A) Name of credit provider.

(B) Name of credit recipient.

(C) Date the trade occurred.

(D) Quantity of credits traded in megagrams.

(E) Model year in which the credits were earned.

(iii) Manufacturers calculating air conditioning leakage and/or efficiency credits under paragraph § 86.1871–12(b) shall include the following information for each model year and separately for

passenger automobiles and light trucks and for each air conditioning system used to generate credits:

(A) A description of the air conditioning system.

(B) The leakage credit value and all the information required to determine this value.

(C) The total credits earned for each averaging set, model year, and region, as applicable.

(iv) Manufacturers calculating advanced technology vehicle credits under paragraph § 86.1871–12(c) shall include the following information for each model year and separately for passenger automobiles and light trucks:

(A) The number of each model type of eligible vehicle sold.

(B) The cumulative model year production of eligible vehicles starting with the 2009 model year.

(C) The carbon-related exhaust emission value by model type and model year.

(v) Manufacturers calculating off-cycle technology credits under paragraph § 86.1871–12(d) shall include, for each model year and separately for passenger automobiles and light trucks, all test results and data required for calculating such credits.

(vi) Unless a manufacturer reports the data required by this section in the annual production report required under § 86.1844–01(e) or the annual report required under § 600.512–12 of this chapter, a manufacturer must submit an annual report for each model year after production ends for all affected vehicles produced by the manufacturer subject to the provisions of this subpart and no later than May 1 of the calendar year following the given model year. Annual reports must be submitted to: Director, Compliance Division, U.S. Environmental Protection Agency, 2000 Traverwood Dr., Ann Arbor, Michigan 48105.

(vii) Failure by a manufacturer to submit the annual report in the specified time period for all vehicles subject to the provisions in this section is a violation of section 203(a)(1) of the Clean Air Act (42 U.S.C. 7522 (a)(1)) for each applicable vehicle produced by that manufacturer.

(viii) If EPA or the manufacturer determines that a reporting error occurred on an annual report previously submitted to EPA, the manufacturer's credit or debit calculations will be recalculated. EPA may void erroneous credits, unless traded, and will adjust erroneous debits. In the case of traded erroneous credits, EPA must adjust the selling manufacturer's credit balance to reflect the sale of such credits and any resulting credit deficit.

(3) *Notice of opportunity for hearing.* Any voiding of the certificate under paragraph (l)(1)(vi) of this section will be made only after EPA has offered the affected manufacturer an opportunity for a hearing conducted in accordance with 40 CFR part 1068, subpart G, and, if a manufacturer requests such a hearing, will be made only after an initial decision by the Presiding Officer.

[81 FR 73992, Oct. 25, 2016, as amended at 85 FR 22620, Apr. 23, 2020]

§ 86.1866–12 CO_2 credits for advanced technology vehicles.

This section describes how to apply CO_2 credits for advanced technology passenger automobiles and light trucks (including MDPV). This section does not apply for heavy-duty vehicles that are not MDPV.

(a) Electric vehicles, plug-in hybrid electric vehicles, and fuel cell vehicles, as those terms are defined in § 86.1803–01, that are certified and produced for U.S. sale, where ''U.S.'' means the states and territories of the United States, in the 2012 through 2025 model years may use a value of zero (0) grams/mile of CO_2 to represent the proportion of electric operation of a vehicle that is derived from electricity that is generated from sources that are not on-board the vehicle, as specified by this paragraph (a).

(1) Model years 2012 through 2016: The use of zero (0) grams/mile CO_2 is limited to the first 200,000 combined electric vehicles, plug-in hybrid electric vehicles, and fuel cell vehicles produced for U.S. sale, where ''U.S.'' means the states and territories of the United States, in the 2012 through 2016 model years, except that a manufacturer that produces 25,000 or more such vehicles for U.S. sale in the 2012 model year shall be subject to a limitation on the use of zero (0) grams/mile CO_2 to

the first 300,000 combined electric vehicles, plug-in hybrid electric vehicles, and fuel cell vehicles produced and delivered for sale by a manufacturer in the 2012 through 2016 model years.

(2) Model years 2017 through 2026: For electric vehicles, plug-in hybrid electric vehicles, and fuel cell vehicles produced for U.S. sale, where ''U.S.'' means the states and territories of the United States, in the 2017 through 2026 model years, such use of zero (0) grams/mile CO_2 is unrestricted.

(b) For electric vehicles, plug-in hybrid electric vehicles, fuel cell vehicles, dedicated natural gas vehicles, and dual-fuel natural gas vehicles as those terms are defined in § 86.1803–01, that are certified and produced for U.S. sale in the specified model years and that meet the additional specifications in this section, the manufacturer may use the production multipliers in this paragraph (b) when determining additional credits for advanced technology vehicles. Full size pickup trucks eligible for and using a production multiplier are not eligible for the performance-based credits described in § 86.1870–12(b).

(1) The production multipliers, by model year, for model year 2017 through 2021 electric vehicles and fuel cell vehicles are as follows:

Model year	Production multiplier
2017	2.0
2018	2.0
2019	2.0
2020	1.75
2021	1.5

(2)(i) The production multipliers, by model year, for model year 2017 through 2021 plug-in hybrid electric vehicles and model year 2017 through 2026 dedicated natural gas vehicles and dual-fuel natural gas vehicles are as follows:

Model year	Production multiplier
2017	1.6
2018	1.6
2019	1.6
2020	1.45
2021	1.3
2022–2026 (dedicated and dual fuel natural gas vehicles only)	2.0

(ii) The minimum all-electric driving range that a plug-in hybrid electric vehicle must have in order to qualify for use of a production multiplier is 10.2 miles on its nominal storage capacity of electricity when operated on the highway fuel economy test cycle. Alternatively, a plug-in hybrid electric vehicle may qualify for use of a production multiplier by having an equivalent all-electric driving range greater than or equal to 10.2 miles during its actual charge-depleting range as measured on the highway fuel economy test cycle and tested according to the requirements of SAE J1711, Recommended Practice for Measuring the Exhaust Emissions and Fuel Economy of Hybrid-Electric Vehicles, Including Plug-In Hybrid Vehicles (incorporated by reference in § 86.1). The equivalent all-electric range of a PHEV is determined from the following formula:

$$EAER = R_{CDA} \times ((CO2_{CS} - CO2_{CD}/CO2_{CS}))$$

Where:

EAER = the equivalent all-electric range attributed to charge-depleting operation of a plug-in hybrid electric vehicle on the highway fuel economy test cycle.

R_{CDA} = The actual charge-depleting range determined according to SAE J1711, Recommended Practice for Measuring the Exhaust Emissions and Fuel Economy of Hybrid-Electric Vehicles, Including Plug-In Hybrid Vehicles (incorporated by reference in § 86.1).

CO_{2CS} = The charge-sustaining CO_2 emissions in grams per mile on the highway fuel economy test determined according to SAE J1711, Recommended Practice for Measuring the Exhaust Emissions and Fuel Economy of Hybrid-Electric Vehicles, Including Plug-In Hybrid Vehicles (incorporated by reference in § 86.1).

CO_{2CD} = The charge-depleting CO_2 emissions in grams per mile on the highway fuel economy test determined according to SAE J1711, Recommended Practice for Measuring the Exhaust Emissions and Fuel Economy of Hybrid-Electric Vehicles, Including Plug-In Hybrid Vehicles (incorporated by reference in § 86.1).

(3) The actual production of qualifying vehicles may be multiplied by the applicable value according to the model year, and the result, rounded to the nearest whole number, may be used to represent the production of qualifying vehicles when calculating average carbon-related exhaust emissions under § 600.512 of this chapter.

(c) Calculating multiplier-based credits for advanced technology vehicles: This paragraph (c) describes the method for calculating credits using the production multipliers in paragraph (b) of this section. Production multipliers must be used according to this paragraph (c) and must not be used in calculating fleet average carbon-related exhaust emissions under 40 CFR part 600 or § 86.1865–12(i), or in any elements of the equation used for the calculation of CO_2 credits or debits in § 86.1865–12(k)(4). Calculate credits for advanced technology vehicles for a given model year, and separately for passenger automobiles and light trucks, using the following equation, subtracting the credits calculated for the base fleet from the credits calculated for the fleet with multipliers applied. No credits are earned if the result is a negative value. All values expressed in megagrams shall be rounded to the nearest whole number.

$$Credits\ [Mg] = [Credits_{adj}] - [Credits_{base}]$$

(1) For model year 2017–2021 multipliers, determine adjusted fleet credits ($Credits_{adj}$) in megagrams using one of the following methods, where the resulting $Credits_{adj}$ is rounded to the nearest whole number. Use the method that returns the highest total megagrams. For 2022 and later model years, determine adjusted fleet credits ($Credits_{adj}$) in megagrams using only Method 1 in paragraph (c)(1)(i) of this section, where the resulting $Credits_{adj}$ is rounded to the nearest whole number. Note that the adjusted CO_2 standard (S_{adj}) and the adjusted fleet average carbon-related exhaust emissions (E_{adj}) are determined solely for the purpose of calculating advanced technology vehicle credits in this section; the official CO_2 standard applicable to the fleet will continue to be the value calculated and rounded according to § 86.1818–12(c), and the official fleet average carbon-related exhaust emissions applicable to the fleet will continue to be the value calculated and rounded according to 40 CFR 600.510–12(j). In addition, note that the rounding requirements in this section differ from those specified for the official fleet standards calculated under § 86.1818–12 and for the official fleet average carbon-related exhaust emissions calculated under 40 CFR 600.510–12.

(i) Method 1: All values that determine fleet credits are adjusted using the applicable multipliers.

$$Credits_{adj}\ [Mg] = \left[\frac{\left(S_{adj} - E_{adj}\right) \times P_{adj} \times VLM}{1{,}000{,}000}\right]$$

Where:

S_{adj} = adjusted CO_2 standard calculated according to the method described in § 86.1818–12(c), except that the actual production of qualifying vehicles under this section shall be multiplied by the applicable production multiplier, and no rounding shall be applied to the result.

E_{adj} = adjusted production-weighted fleet average carbon-related exhaust emissions calculated according to the method described in 40 CFR 600.510–12(j), except that the actual production of qualifying vehicles under this section shall be multiplied by the applicable production multiplier, and no rounding shall be applied to the result.

P_{adj} = total adjusted production of passenger automobiles or light trucks, except that the actual production of qualifying vehicles under this section shall be multiplied by the applicable production multiplier, and no rounding shall be applied to the result.

VLM = vehicle lifetime miles, which for passenger automobiles shall be 195,264 and for light trucks shall be 225,865.

(ii) Method 2: Multipliers are applied only to calculation of the fleet average carbon-related exhaust emissions.

$$Credits_{adj}\ [Mg] = \left[\frac{\left(S_{base} - E_{adj}\right) \times P_{base} \times VLM}{1{,}000{,}000}\right]$$

S_{base} = CO_2 standard calculated according to the method described in § 86.1818–12(c), except that no rounding shall be applied to the result.

E_{adj} = adjusted production-weighted fleet average carbon-related exhaust emissions calculated according to the method described in 40 CFR 600.510–12(j), except that the actual production of qualifying vehicles under this section shall be multiplied by the applicable production multiplier, and no rounding shall be applied to the result.

P_{base} = total production of passenger automobiles or light trucks.

VLM = vehicle lifetime miles, which for passenger automobiles shall be 195,264 and for light trucks shall be 225,865.

(2) Determine base fleet credits in megagrams using the following equation and rounding the result to the nearest whole number. Do not adjust any production volume values with a multiplier. Note that the CO_2 standard (S_{base}) and the fleet average carbon-related exhaust emissions (E_{base}) are determined solely for the purpose of calculating advanced technology vehicle credits in this section and do not replace the official fleet values; the official CO_2 standard applicable to the fleet will continue to be the value calculated and rounded according to § 86.1818–12(c), and the official fleet average carbon-related exhaust emissions applicable to the fleet will continue to be the value calculated and rounded according to 40 CFR 600.510–12(j). In addition, note that the rounding requirements in this section differ from those specified for the official fleet standards calculated under § 86.1818–12 and for the official fleet average carbon-related exhaust emissions calculated under 40 CFR 600.510–12.

$$Credits_{base}\ [Mg] = \left[\frac{\left(S_{base} - E_{base}\right) \times P_{base} \times VLM}{1{,}000{,}000}\right]$$

S_{base} = CO_2 standard calculated according to the method described in § 86.1818–12(c), except that no rounding shall be applied to the result.

E_{base} = production-weighted fleet average carbon-related exhaust emissions calculated according to the method described in 40 CFR 600.510–12(j), except that no rounding shall be applied to the result.

P_{base} = total production of passenger automobiles or light trucks.

VLM = vehicle lifetime miles, which for passenger automobiles shall be 195,264 and for light trucks shall be 225,865.

[77 FR 63164, Oct. 15, 2012, as amended at 81 FR 73996, Oct. 25, 2016; 85 FR 22620, Apr. 23, 2020; 85 FR 25269, Apr. 30, 2020]

§ 86.1867–12 CO_2 credits for reducing leakage of air conditioning refrigerant.

Manufacturers may generate credits applicable to the CO_2 fleet average program described in § 86.1865–12 by implementing specific air conditioning system technologies designed to reduce air conditioning refrigerant leakage over the useful life of their passenger automobiles and/or light trucks (including MDPV); only the provisions of paragraph (a) of this section apply for non-MDPV heavy-duty vehicles. Credits shall be calculated according to this section for each air conditioning system that the manufacturer is using to generate CO_2 credits. Manufacturers may also generate early air conditioning refrigerant leakage credits under this section for the 2009 through 2011 model years according to the provisions of § 86.1871–12(b).

(a) The manufacturer shall calculate an annual rate of refrigerant leakage from an air conditioning system in grams per year according to the procedures specified in SAE J2727 (incorporated by reference in § 86.1). In doing

so, the refrigerant permeation rates for hoses shall be determined using the procedures specified in SAE J2064 (incorporated by reference in § 86.1) The annual rate of refrigerant leakage from an air conditioning system shall be rounded to the nearest tenth of a gram per year. The procedures of SAE J2727 may be used to determine leakage rates for HFC–134a and HFO–1234yf; manufacturers should contact EPA regarding procedures for other refrigerants. The annual rate of refrigerant leakage from an air conditioning system shall be rounded to the nearest tenth of a gram per year.

(b) The CO_2-equivalent gram per mile leakage reduction used to calculate the total leakage credits generated by an air conditioning system shall be determined according to this paragraph (b), separately for passenger automobiles and light trucks, and rounded to the nearest tenth of a gram per mile:

(1) Passenger automobile leakage credit for an air conditioning system:

$$Leakage\ Credit = MaxCredit \times \left[1 - \left(\frac{LeakScore}{16.6}\right) \times \left(\frac{GWP_{REF}}{1430}\right)\right] - HiLeakDis$$

Where:

MaxCredit is 12.6 (grams CO_2-equivalent/mile) for air conditioning systems using HFC–134a, and 13.8 (grams CO_2-equivalent/mile) for air conditioning systems using a refrigerant with a lower global warming potential.

LeakScore means the annual refrigerant leakage rate determined according to the procedures in SAE J2727 (incorporated by reference in § 86.1), where the refrigerant permeation rates for hoses shall be determined using the procedures specified in SAE J2064 (incorporated by reference in § 86.1). If the calculated rate is less than 8.3 grams/year (or 4.1 grams/year for systems using only electric compressors), the rate for the purpose of this formula shall be 8.3 grams/year (or 4.1 grams/year for systems using only electric compressors).

GWP_{REF} means the global warming potential of the refrigerant as indicated in paragraph (e) of this section or as otherwise determined by the Administrator;

HiLeakDis means the high leak disincentive, which is zero for model years 2012 through 2016, and for 2017 and later model years is determined using the following equation, except that if GWP_{REF} is greater than 150 or if the calculated result of the equation is less than zero, HiLeakDis shall be set equal to zero, or if the calculated result of the equation is greater than 1.8 g/mi, HiLeakDis shall be set to 1.8 g/mi:

$$HiLeakDis = 1.8 \times \left(\frac{(LeakScore - LeakThreshold)}{3.3}\right)$$

Where,

LeakThreshold = 11.0 for air conditioning systems with a refrigerant capacity less than or equal to 733 grams; or

LeakThreshold = [Refrigerant Capacity × 0.015] for air conditioning systems with a refrigerant capacity greater than 733 grams, where RefrigerantCapacity is the maximum refrigerant capacity specified for the air conditioning system, in grams.

(2) Light truck leakage credit for an air conditioning system:

$$Leakage\ Credit = MaxCredit \times \left[1 - \left(\frac{LeakScore}{20.7}\right) \times \left(\frac{GWP_{REF}}{1430}\right)\right] - HiLeakDis$$

Where:

MaxCredit is 15.6 (grams CO_2-equivalent/mile) for air conditioning systems using HFC–134a, and 17.2 (grams CO_2-equivalent/mile) for air conditioning systems using a refrigerant with a lower global warming potential.

LeakScore means the annual refrigerant leakage rate determined according to the provisions of SAE J2727 (incorporated by reference in § 86.1),, where the refrigerant permeation rates for hoses shall be determined using the procedures specified in SAE J2064 (incorporated by reference in § 86.1). If the calculated rate is less than 10.4 grams/year (or 5.2 grams/year for systems using only electric compressors), the rate for the purpose of this formula shall be 10.4 grams/year (or 5.2 grams/year for systems using only electric compressors).

GWP_{REF} means the global warming potential of the refrigerant as indicated in paragraph (e) of this section or as otherwise determined by the Administrator;

HiLeakDis means the high leak disincentive, which is zero for model years 2012 through 2016, and for 2017 and later model years is determined using the following equation, except that if GWP_{REF} is greater than 150 or if the calculated result of the equation is less than zero, HiLeakDis shall be set equal to zero, or if the calculated result of the equation is greater than 2.1 g/mi, HiLeakDis shall be set to 2.1 g/mi:

$$HiLeakDis = 2.1 \times \left(\frac{(LeakScore - LeakThreshold)}{3.3}\right)$$

Where:

LeakThreshold = 11.0 for air conditioning systems with a refrigerant capacity less than or equal to 733 grams; or

LeakThreshold = [Refrigerant Capacity × 0.015] for air conditioning systems with a refrigerant capacity greater than 733 grams, where RefrigerantCapacity is the maximum refrigerant capacity specified for the air conditioning system, in grams.

(c) The total leakage reduction credits generated by the air conditioning system shall be calculated separately for passenger automobiles and light trucks according to the following formula:

Total Credits (Megagrams) = (Leakage × Production × VLM) ÷ 1,000,000

Where:

Leakage = the CO_2-equivalent leakage credit value in grams per mile determined in paragraph (b)(1) or (b)(2) of this section, whichever is applicable.

Production = The total number of passenger automobiles or light trucks, whichever is applicable, produced with the air conditioning system to which to the leakage credit value from paragraph (b)(1) or (b)(2) of this section applies.

VLM = vehicle lifetime miles, which for passenger automobiles shall be 195,264 and for light trucks shall be 225,865.

(d) The results of paragraph (c) of this section, rounded to the nearest whole number, shall be included in the manufacturer's credit/debit totals calculated in § 86.1865–12(k)(5).

(e) The following values for refrigerant global warming potential (GWP_{REF}), or alternative values as determined by the Administrator, shall be used in the calculations of this section. The Administrator will determine values for refrigerants not included in this paragraph (e) upon request by a manufacturer.

(1) For HFC–134a, GWP_{REF} = 1430;
(2) For HFC–152a, GWP_{REF} = 124;
(3) For HFO–1234yf, GWP_{REF} = 4;
(4) For CO_2, GWP_{REF} = 1.

[77 FR 63165, Oct. 15, 2012, as amended at 81 FR 73996, Oct. 25, 2016]

§ 86.1868–12 CO_2 credits for improving the efficiency of air conditioning systems.

Manufacturers may generate credits applicable to the CO_2 fleet average program described in § 86.1865–12 by implementing specific air conditioning system technologies designed to reduce air conditioning-related CO_2 emissions over the useful life of their passenger automobiles and/or light trucks (including MDPV). The provisions of this section do not apply for non-MDPV heavy-duty vehicles. Credits shall be calculated according to this section for each air conditioning system that the manufacturer is using to generate CO_2 credits. Manufacturers may also generate early air conditioning efficiency credits under this section for the 2009 through 2011 model years according to the provisions of § 86.1871–12(b). For

model years 2012 and 2013 the manufacturer may determine air conditioning efficiency credits using the requirements in paragraphs (a) through (d) of this section. For model years 2014 through 2016 the eligibility requirements specified in either paragraph (e) or (f) of this section must be met before an air conditioning system is allowed to generate credits. For model years 2017 through 2019 the eligibility requirements specified in paragraph (f) of this section must be met before an air conditioning system is allowed to generate credits. For model years 2020 and later the eligibility requirements specified in paragraph (g) of this section must be met before an air conditioning system is allowed to generate credits.

(a)(1) 2012 through 2016 model year air conditioning efficiency credits are available for the following technologies in the gram per mile amounts indicated in the following table:

Air conditioning technology	Credit value (g/mi)
Reduced reheat, with externally-controlled, variable-displacement compressor (*e.g.* a compressor that controls displacement based on temperature setpoint and/or cooling demand of the air conditioning system control settings inside the passenger compartment).	1.7
Reduced reheat, with externally-controlled, fixed-displacement or pneumatic variable displacement compressor (*e.g.* a compressor that controls displacement based on conditions within, or internal to, the air conditioning system, such as head pressure, suction pressure, or evaporator outlet temperature).	1.1
Default to recirculated air with closed-loop control of the air supply (sensor feedback to control interior air quality) whenever the ambient temperature is 75 °F or higher: Air conditioning systems that operated with closed-loop control of the air supply at different temperatures may receive credits by submitting an engineering analysis to the Administrator for approval.	1.7
Default to recirculated air with open-loop control air supply (no sensor feedback) whenever the ambient temperature is 75 °F or higher. Air conditioning systems that operate with open-loop control of the air supply at different temperatures may receive credits by submitting an engineering analysis to the Administrator for approval.	1.1
Blower motor controls which limit wasted electrical energy (*e.g.* pulse width modulated power controller).	0.9
Internal heat exchanger (*e.g.* a device that transfers heat from the high-pressure, liquid-phase refrigerant entering the evaporator to the low-pressure, gas-phase refrigerant exiting the evaporator).	1.1
Improved condensers and/or evaporators with system analysis on the component(s) indicating a coefficient of performance improvement for the system of greater than 10% when compared to previous industry standard designs).	1.1
Oil separator. The manufacturer must submit an engineering analysis demonstrating the increased improvement of the system relative to the baseline design, where the baseline component for comparison is the version which a manufacturer most recently had in production on the same vehicle design or in a similar or related vehicle model. The characteristics of the baseline component shall be compared to the new component to demonstrate the improvement.	0.6

(2) 2017 and later model year air conditioning efficiency credits are available for the following technologies in the gram per mile amounts indicated for each vehicle category in the following table:

Air conditioning technology	Passenger automobiles (g/mi)	Light trucks (g/mi)
Reduced reheat, with externally-controlled, variable-displacement compressor (*e.g.* a compressor that controls displacement based on temperature setpoint and/or cooling demand of the air conditioning system control settings inside the passenger compartment).	1.5	2.2
Reduced reheat, with externally-controlled, fixed-displacement or pneumatic variable displacement compressor (*e.g.* a compressor that controls displacement based on conditions within, or internal to, the air conditioning system, such as head pressure, suction pressure, or evaporator outlet temperature).	1.0	1.4
Default to recirculated air with closed-loop control of the air supply (sensor feedback to control interior air quality) whenever the ambient temperature is 75 °F or higher: Air conditioning systems that operated with closed-loop control of the air supply at different temperatures may receive credits by submitting an engineering analysis to the Administrator for approval.	1.5	2.2
Default to recirculated air with open-loop control air supply (no sensor feedback) whenever the ambient temperature is 75 °F or higher. Air conditioning systems that operate with open-loop control of the air supply at different temperatures may receive credits by submitting an engineering analysis to the Administrator for approval.	1.0	1.4
Blower motor controls which limit wasted electrical energy (*e.g.* pulse width modulated power controller).	0.8	1.1
Internal heat exchanger (*e.g.* a device that transfers heat from the high-pressure, liquid-phase refrigerant entering the evaporator to the low-pressure, gas-phase refrigerant exiting the evaporator).	1.0	1.4

Air conditioning technology	Passenger automobiles (g/mi)	Light trucks (g/mi)
Improved condensers and/or evaporators with system analysis on the component(s) indicating a coefficient of performance improvement for the system of greater than 10% when compared to previous industry standard designs).	1.0	1.4
Oil separator. The manufacturer must submit an engineering analysis demonstrating the increased improvement of the system relative to the baseline design, where the baseline component for comparison is the version which a manufacturer most recently had in production on the same vehicle design or in a similar or related vehicle model. The characteristics of the baseline component shall be compared to the new component to demonstrate the improvement.	0.5	0.7
Advanced technology air conditioning compressor with improved efficiency relative to fixed-displacement compressors achieved through the addition of a variable crankcase suction valve.	1.1	1.1

(b) Air conditioning efficiency credits are determined on an air conditioning system basis. For each air conditioning system that is eligible for a credit based on the use of one or more of the items listed in paragraph (a) of this section, the total credit value is the sum of the gram per mile values for the appropriate model year listed in paragraph (a) of this section for each item that applies to the air conditioning system.

(1) In the 2012 through 2016 model years the total credit value for an air conditioning system for passenger automobiles or light trucks may not be greater than 5.7 grams per mile.

(2) In the 2017 and later model years the total credit value for an air conditioning system may not be greater than 5.0 grams per mile for any passenger automobile or 7.2 grams per mile for any light truck.

(c) The total efficiency credits generated by an air conditioning system shall be calculated separately for passenger automobiles and light trucks according to the following formula:

$$\text{Total Credits (Megagrams)} = (\text{Credit} \times \text{Production} \times \text{VLM}) \div 1{,}000{,}000$$

Where:

Credit = the CO_2 efficiency credit value in grams per mile determined in paragraph (b) or (e) of this section, whichever is applicable.

Production = The total number of passenger automobiles or light trucks, whichever is applicable, produced with the air conditioning system to which to the efficiency credit value from paragraph (b) of this section applies.

VLM = vehicle lifetime miles, which for passenger automobiles shall be 195,264 and for light trucks shall be 225,865.

(d) The results of paragraph (c) of this section, rounded to the nearest whole number, shall be included in the manufacturer's credit/debit totals calculated in § 86.1865–12(k)(5).

(e) For the 2014 through 2016 model years, manufacturers must validate air conditioning credits by using the Air Conditioning Idle Test Procedure according to the provisions of this paragraph (e) or, alternatively, by using the AC17 reporting requirements specified in paragraph (f) of this section. The Air Conditioning Idle Test Procedure is not applicable after the 2016 model year.

(1) For each air conditioning system selected by the manufacturer to generate air conditioning efficiency credits, the manufacturer shall perform the Air Conditioning Idle Test Procedure specified in § 86.165–12 of this part.

(2) Using good engineering judgment, the manufacturer must select the vehicle configuration to be tested that is expected to result in the greatest increased CO_2 emissions as a result of the operation of the air conditioning system for which efficiency credits are being sought. If the air conditioning system is being installed in passenger automobiles and light trucks, a separate determination of the quantity of credits for passenger automobiles and light trucks must be made, but only one test vehicle is required to represent the air conditioning system, provided it represents the worst-case impact of the system on CO_2 emissions.

(3) The manufacturer shall determine an idle test threshold (ITT) for the tested vehicle configuration. A comparison of this threshold value with the CO_2 emissions increase recorded over the Air Conditioning Idle Test Procedure in § 86.165–12 determines the total

credits that may be generated by an air conditioning system. The manufacturer may choose one of the following idle test threshold (ITT) values for an air conditioning system:

(i) 14.9 grams per minute; or

(ii) The value determined from the following equation, rounded to the nearest tenth of a gram per minute:

$$Idle\ Test\ Threshold\ (ITT) = 20.5 - (1.58 \times Displacement)$$

Where:

Displacement = the engine displacement of the test vehicle, expressed in liters and rounded to the nearest one tenth of a liter.

(4)(i) If the CO_2 emissions value determined from the Idle Test Procedure in § 86.165–12 is less than or equal to the idle test threshold (ITT) determined in paragraph (e)(3) of this section, the total CO_2 efficiency credit value (Credit) for use in paragraph (c) of this section shall be the applicable value determined in paragraph (b) of this section.

(ii) If the CO_2 emissions value determined from the Idle Test Procedure in § 86.165–12 is greater than the idle test threshold (ITT) determined in paragraph (e)(3) of this section, the total CO_2 efficiency credit value (Credit) for use in paragraph (c) of this section shall be determined using the following formula:

$$Credit = TCV \times \left[1 - \left(\frac{ITP - ITT}{6.4}\right)\right]$$

Where:

Credit = The CO_2 efficiency credit value (Credit) that must be used in paragraph (c) of this section to calculate the total credits (in Megagrams) of air conditioning efficiency credits;

TCV = The total CO_2 efficiency credit value determined according to paragraph (b) of this section; and

ITP = the increased CO_2 emissions determined from the Idle Test Procedure in § 86.165–14.

ITT = the idle test threshold determined in paragraph (e)(3) of this section and rounded to the nearest one tenth of a gram per minute:

(iii) Air conditioning systems that record an increased CO_2 emissions value on the Idle Test Procedure in § 86.165–14 that is greater than or equal to the idle test threshold (ITT) determined in paragraph (e)(3) of this section plus 6.4 grams per minute are not eligible for an air conditioning efficiency credit.

(5) Air conditioning systems with compressors that are solely powered by electricity shall submit Air Conditioning Idle Test Procedure data to be eligible to generate credits in the 2014 and later model years, but such systems are not required to meet a specific threshold to be eligible to generate such credits, as long as the engine remains off for a period of at least 2 cumulative minutes during the air conditioning on portion of the Idle Test Procedure in § 86.165–12(d).

(f) *AC17 reporting requirements.* Manufacturers may use the provisions of this paragraph (f) as an alternative to the use of the Air Conditioning Idle Test to demonstrate eligibility to generate air conditioning efficiency credits for the 2014 through 2016 model years. This paragraph (f) is required for the 2017 through 2019 model years.

(1) The manufacturer shall perform the AC17 test specified in 40 CFR 1066.845 on each unique air conditioning system design and vehicle platform combination (as those terms are defined in § 86.1803) for which the manufacturer intends to accrue air conditioning efficiency credits. The manufacturer must test at least one unique air conditioning system within each

vehicle platform in a model year, unless all unique air conditioning systems within a vehicle platform have been previously tested. A unique air conditioning system design is a system with unique or substantially different component designs or types and/or system control strategies (*e.g.*, fixed displacement vs. variable displacement compressors, orifice tube vs. thermostatic expansion valve, single vs. dual evaporator, etc.). In the first year of such testing, the tested vehicle configuration shall be the highest production vehicle configuration within each platform. In subsequent model years the manufacturer must test other unique air conditioning systems within the vehicle platform, proceeding from the highest production untested system until all unique air conditioning systems within the platform have been tested, or until the vehicle platform experiences a major redesign. Whenever a new unique air conditioning system is tested, the highest production configuration using that system shall be the vehicle selected for testing. Air conditioning system designs which have similar cooling capacity, component types, and control strategies, yet differ in terms of compressor pulley ratios or condenser or evaporator surface areas will not be considered to be unique system designs. The test results from one unique system design may represent all variants of that design. Manufacturers must use good engineering judgment to identify the unique air conditioning system designs which will require AC17 testing in subsequent model years. Results must be reported separately for all four phases (two phases with air conditioning off and two phases with air conditioning on) of the test to the Environmental Protection Agency, and the results of the calculations required in 40 CFR 1066.845 must also be reported. In each subsequent model year additional air conditioning system designs, if such systems exist, within a vehicle platform that is generating air conditioning credits must be tested using the AC17 procedure. When all unique air conditioning system designs within a platform have been tested, no additional testing is required within that platform, and credits may be carried over to subsequent model years until there is a significant change in the platform design, at which point a new sequence of testing must be initiated. No more than one vehicle from each credit-generating platform is required to be tested in each model year.

(2) The manufacturer shall also report the following information for each vehicle tested: the vehicle class, model type, curb weight, engine displacement, transmission class and configuration, interior volume, climate control system type and characteristics, refrigerant used, compressor type, and evaporator/condenser characteristics.

(g) *AC17 validation testing and reporting requirements.* For the 2020 and later model years, manufacturers must validate air conditioning credits by using the AC17 Test Procedure according to the provisions of this paragraph (g).

(1) For each air conditioning system (as defined in § 86.1803) selected by the manufacturer to generate air conditioning efficiency credits, the manufacturer shall perform the AC17 Air Conditioning Efficiency Test Procedure specified in 40 CFR 1066.845, according to the requirements of this paragraph (g).

(2) Complete the following testing and calculations:

(i) Perform the AC17 test on a vehicle that incorporates the air conditioning system with the credit-generating technologies.

(ii) Perform the AC17 test on a vehicle which does not incorporate the credit-generating technologies. The tested vehicle must be similar to the vehicle tested under paragraph (g)(2)(i) of this section and selected using good engineering judgment. The tested vehicle may be from an earlier design generation. If the manufacturer cannot identify an appropriate vehicle to test under this paragraph (g)(2)(ii), they may submit an engineering analysis that describes why an appropriate vehicle is not available or not appropriate, and includes data and information supporting specific credit values, using good engineering judgment.

(iii) Subtract the CO_2 emissions determined from testing under paragraph (g)(1)(i) of this section from the CO_2 emissions determined from testing under paragraph (g)(1)(ii) of this section and round to the nearest 0.1

grams/mile. If the result is less than or equal to zero, the air conditioning system is not eligible to generate credits. If the result is greater than or equal to the total of the gram per mile credits determined in paragraph (b) of this section, then the air conditioning system is eligible to generate the maximum allowable value determined in paragraph (b) of this section. If the result is greater than zero but less than the total of the gram per mile credits determined in paragraph (b) of this section, then the air conditioning system is eligible to generate credits in the amount determined by subtracting the CO_2 emissions determined from testing under paragraph (g)(1)(i) of this section from the CO_2 emissions determined from testing under paragraph (g)(1)(ii) of this section and rounding to the nearest 0.1 grams/mile.

(3) For the first model year for which an air conditioning system is expected to generate credits, the manufacturer must select for testing the projected highest-selling configuration within each combination of vehicle platform and air conditioning system (as those terms are defined in § 86.1803). The manufacturer must test at least one unique air conditioning system within each vehicle platform in a model year, unless all unique air conditioning systems within a vehicle platform have been previously tested. A unique air conditioning system design is a system with unique or substantially different component designs or types and/or system control strategies (*e.g.*, fixed-displacement vs. variable displacement compressors, orifice tube vs. thermostatic expansion valve, single vs. dual evaporator, etc.). In the first year of such testing, the tested vehicle configuration shall be the highest production vehicle configuration within each platform. In subsequent model years the manufacturer must test other unique air conditioning systems within the vehicle platform, proceeding from the highest production untested system until all unique air conditioning systems within the platform have been tested, or until the vehicle platform experiences a major redesign. Whenever a new unique air conditioning system is tested, the highest production configuration using that system shall be the vehicle selected for testing. Credits may continue to be generated by the air conditioning system installed in a vehicle platform provided that:

(i) The air conditioning system components and/or control strategies do not change in any way that could be expected to cause a change in its efficiency;

(ii) The vehicle platform does not change in design such that the changes could be expected to cause a change in the efficiency of the air conditioning system; and

(iii) The manufacturer continues to test at least one unique air conditioning system within each platform using the air conditioning system, in each model year, until all unique air conditioning systems within each platform have been tested.

(4) Each air conditioning system must be tested and must meet the testing criteria in order to be allowed to generate credits. Credits may continue to be generated by an air conditioning system in subsequent model years if the manufacturer continues to test at least one unique air conditioning system within each platform on an annual basis, unless all systems have been previously tested, as long as the air conditioning system and vehicle platform do not change substantially.

(h) The following definitions apply to this section:

(1) *Reduced reheat, with externally-controlled, variable displacement compressor* means a system in which compressor displacement is controlled via an electronic signal, based on input from sensors (e.g., position or setpoint of interior temperature control, interior temperature, evaporator outlet air temperature, or refrigerant temperature) and air temperature at the outlet of the evaporator can be controlled to a level at 41 °F, or higher.

(2) *Reduced reheat, with externally-controlled, fixed-displacement or pneumatic variable displacement compressor* means a system in which the output of either compressor is controlled by cycling the compressor clutch off-and-on via an electronic signal, based on input from sensors (e.g., position or setpoint of interior temperature control, interior temperature, evaporator outlet air

temperature, or refrigerant temperature) and air temperature at the outlet of the evaporator can be controlled to a level at 41 °F, or higher.

(3) *Default to recirculated air mode* means that the default position of the mechanism which controls the source of air supplied to the air conditioning system shall change from outside air to recirculated air when the operator or the automatic climate control system has engaged the air conditioning system (i.e., evaporator is removing heat), except under those conditions where dehumidification is required for visibility (i.e., defogger mode). In vehicles equipped with interior air quality sensors (e.g., humidity sensor, or carbon dioxide sensor), the controls may determine proper blend of air supply sources to maintain freshness of the cabin air and prevent fogging of windows while continuing to maximize the use of recirculated air. At any time, the vehicle operator may manually select the non-recirculated air setting during vehicle operation but the system must default to recirculated air mode on subsequent vehicle operations (i.e., next vehicle start). The climate control system may delay switching to recirculation mode until the interior air temperature is less than the outside air temperature, at which time the system must switch to recirculated air mode.

(4) *Blower motor controls which limit waste energy* means a method of controlling fan and blower speeds which does not use resistive elements to decrease the voltage supplied to the motor.

(5) *Improved condensers and/or evaporators* means that the coefficient of performance (COP) of air conditioning system using improved evaporator and condenser designs is 10 percent higher, as determined using the bench test procedures described in SAE J2765 ''Procedure for Measuring System COP of a Mobile Air Conditioning System on a Test Bench,'' when compared to a system using standard, or prior model year, component designs (SAE J2765 is incorporated by reference in § 86.1). The manufacturer must submit an engineering analysis demonstrating the increased improvement of the system relative to the baseline design, where the baseline component(s) for comparison is the version which a manufacturer most recently had in production on the same vehicle design or in a similar or related vehicle model. The dimensional characteristics (e.g., tube configuration/thickness/spacing, and fin density) of the baseline component(s) shall be compared to the new component(s) to demonstrate the improvement in coefficient of performance.

(6) *Oil separator* means a mechanism which removes at least 50 percent of the oil entrained in the oil/refrigerant mixture exiting the compressor and returns it to the compressor housing or compressor inlet, or a compressor design which does not rely on the circulation of an oil/refrigerant mixture for lubrication.

(7) *Advanced technology air conditioning compressor* means an air conditioning compressor with improved efficiency relative to fixed-displacement compressors. Efficiency gains are derived from improved internal valve systems that optimize the internal refrigerant flow across the range of compressor operator conditions through the addition of a variable crankcase suction valve.

[77 FR 63166, Oct. 15, 2012, as amended at 79 FR 23736, Apr. 28, 2014; 81 FR 73996, Oct. 25, 2016; 85 FR 25270, Apr. 30, 2020]

§ 86.1869–12 CO_2 credits for off-cycle CO_2 reducing technologies.

This section describes how manufacturers may generate credits for off-cycle CO_2-reducing technologies. The provisions of this section do not apply for non-MDPV heavy-duty vehicles, except that § 86.1819–14(d)(13) describes how to apply paragraphs (c) and (d) of this section for those vehicles.

(a) Manufacturers may generate credits for CO_2-reducing technologies where the CO_2 reduction benefit of the technology is not adequately captured on the Federal Test Procedure and/or the Highway Fuel Economy Test such that the technology would not be otherwise installed for purposes of reducing emissions (directly or indirectly) over those test cycles for compliance with the GHG standards. These technologies must have a measurable, demonstrable, and verifiable real-world CO_2 reduction that occurs outside the conditions of

the Federal Test Procedure and the Highway Fuel Economy Test. These optional credits are referred to as ''off-cycle'' credits. The technologies must not be integral or inherent to the basic vehicle design, such as engine, transmission, mass reduction, passive aerodynamic design, and tire technologies. Technologies installed for non-off-cycle emissions related reasons are also not eligible as they would be considered part of the baseline vehicle design. The technology must not be inherent to the design of occupant comfort and entertainment features except for technologies related to reducing passenger air conditioning demand and improving air conditioning system efficiency. Notwithstanding the provisions of this paragraph (a), off-cycle menu technologies included in paragraph (b) of this section remain eligible for credits. Off-cycle technologies used to generate emission credits are considered emission-related components subject to applicable requirements and must be demonstrated to be effective for the full useful life of the vehicle. Unless the manufacturer demonstrates that the technology is not subject to in-use deterioration, the manufacturer must account for the deterioration in their analysis. Durability evaluations of off-cycle technologies may occur at any time throughout a model year, provided that the results can be factored into the data provided in the model year report. Off-cycle credits may not be approved for crash-avoidance technologies, safety critical systems or systems affecting safety-critical functions, or technologies designed for the purpose of reducing the frequency of vehicle crashes. Off-cycle credits may not be earned for technologies installed on a motor vehicle to attain compliance with any vehicle safety standard or any regulation set forth in Title 49 of the Code of Federal Regulations. The manufacturer must use one of the three options specified in this section to determine the CO_2 gram per mile credit applicable to an off-cycle technology. Note that the option provided in paragraph (b) of this section applies only to the 2014 and later model years. The manufacturer should notify EPA in their pre-model year report of their intention to generate any credits under this section.

(b) *Credit available for certain off-cycle technologies.* The provisions of this paragraph (b) are applicable only to 2014 and later model year vehicles. EPA may request data, engineering analyses, or other information that supports a manufacturer's use of the credits in this paragraph (b).

(1) The manufacturer may generate a CO_2 gram/mile credit for certain technologies as specified in this paragraph (b)(1). Technology definitions are in paragraph (b)(4) of this section. Calculated credit values shall be rounded to the nearest 0.1 grams/mile.

(i) *Waste heat recovery.* The credit shall be calculated using the following formula, rounded to the nearest 0.1 grams/mile:

$$Credit\ \left(\frac{g}{mi}\right) = ELR \times 0.007$$

Where:

ELR = the electrical load reduction of the waste heat recovery system, in Watts, calculated as an average over 5-cycle testing.

(ii) *High efficiency exterior lights.* Credits may be accrued for high efficiency lighting as defined in paragraph (b)(4) of this section based on the lighting locations with such lighting installed. Credits for high efficiency lighting are the sum of the credits for the applicable lighting locations in the following table (rounded to the nearest 0.1 grams/mile), or, if all lighting locations in the table are equipped with high efficiency lighting, the total credit for high efficiency lighting shall be 1.0 grams/mile. Lighting components that result in credit levels less than those shown in the following table are not eligible for credits.

Lighting Component	Credit (grams/mile)
Low beam	0.38
High beam	0.05
Parking/position	0.10
Turn signal, front	0.06
Side marker, front	0.06
Tail	0.10
Turn signal, rear	0.06
Side marker, rear	0.06
License plate	0.08

(iii) *Solar panels.* (A) Credits for solar panels used solely for charging the battery of an electric vehicle, plug-in hybrid electric vehicle, or hybrid electric vehicle shall be calculated using the following equation, and rounded to the nearest 0.1 grams/mile:

$$Credit\ \left(\frac{g}{mi}\right) = 0.04385 \times P_{panel}$$

Where:

P_{panel} is the is the rated power of the solar panel, in Watts, determined under the standard test conditions of 1000 Watts per meter squared direct solar irradiance at a panel temperature of 25 degrees Celsius (±2 degrees) with an air mass spectrum of 1.5 (AM1.5).

(B) Credits for solar panels used solely for active vehicle ventilation systems are those specified in paragraph (b)(1)(viii)(E).

(C) Credits for solar panels used both for active cabin ventilation and for charging the battery of an electric vehicle, plug-in hybrid electric vehicle, or hybrid electric vehicle shall be calculated using the following equation, and rounded to the nearest 0.1 grams/mile:

$$Credit\ \left(\frac{g}{mi}\right) = C_{vent} + 0.04385 \times \left(P_{panel} - P_{vent}\right)$$

Where:

C_{vent} is the credit attributable to active cabin ventilation from paragraph (b)(1)(viii)(E) of this section;

P_{panel} is the is the rated power of the solar panel, in Watts, determined under the standard test conditions of 1000 Watts per meter squared direct solar irradiance at a panel temperature of 25 degrees Celsius (±2 degrees) with an air mass spectrum of 1.5 (AM1.5); and

P_{vent} is the amount of power, in Watts, required to run the active cabin ventilation system.

(iv) *Active aerodynamic improvements.* (A) The credit for active aerodynamic improvements for passenger automobiles shall be calculated using the following equation, and rounded to the nearest 0.1 grams/mile:

$$Credit\ \left(\frac{g}{mi}\right) = 19.36 \times CD_{reduced}$$

Where:

$CD_{reduced}$ is the percent reduction in the coefficient of drag (C_d), shown as a value from 0 to 1. The coefficient of drag shall be determined using good engineering judgment consistent with standard industry test methods and practices.

(B) The credit for active aerodynamic improvements for light trucks shall be calculated using the following equation, and rounded to the nearest 0.1 grams/mile:

$$Credit\left(\frac{g}{mi}\right) = 33.16 \times CD_{reduced}$$

Where:

$CD_{reduced}$ is the percent reduction in the coefficient of drag (C_d), shown as a value from 0 to 1. The coefficient of drag shall be determined using good engineering judgment consistent with standard industry test methods and practices.

(v) *Engine idle start-stop.* (A) The passenger automobile credit for engine idle start-stop systems is 2.5 grams/mile, provided that the vehicle is equipped with an electric heater circulation system (or a technology that provides a similar function). For vehicles not equipped with such systems the credit is 1.5 grams/mile.

(B) The light truck credit for engine idle start-stop systems is 4.4 grams/mile, provided that the vehicle is equipped with an electric heater circulation system (or a technology that provides a similar function). For vehicles not equipped with such systems the credit is 2.9 grams/mile.

(vi) *Active transmission warm-up.* Systems using a single heat-exchanging loop that serves both transmission and engine warm-up functions are eligible for the credits in either paragraph (b)(1)(vi) or (b)(1)(vii) of this section, but not both.

(A) The passenger automobile credit is 1.5 grams/mile.

(B) The light truck credit is 3.2 grams/mile.

(vii) *Active engine warm-up.* Systems using a single heat-exchanging loop that serves both transmission and engine warm-up functions are eligible for the credits in either paragraph (b)(1)(vi) or (b)(1)(vii) of this section, but not both.

(A) The passenger automobile credit is 1.5 grams/mile.

(B) The light truck credit is 3.2 grams/mile.

(viii) *Thermal control technologies.* The maximum credit allowed for thermal control technologies is limited to 3.0 g/mi for passenger automobiles and to 4.3 g/mi for light trucks.

(A) *Glass or glazing.* Glass or glazing credits are calculated using the following equation, and rounded to the nearest 0.1 grams/mile:

$$\text{Credit} = \left[Z \times \sum_{i=1}^{n} \frac{T_i \times G_i}{G}\right]$$

Where:

Credit = the total glass or glazing credits, in grams per mile rounded to the nearest 0.1 grams/mile. The credit may not exceed 2.9 g/mi for passenger automobiles or 3.9 g/mi for light trucks;

Z = 0.3 for passenger automobiles and 0.4 for light trucks;

G_i = the measured glass area of window *i*, in square meters and rounded to the nearest tenth;

G = the total glass area of the vehicle, in square meters and rounded to the nearest tenth;

Ti = the estimated temperature reduction for the glass area of window *i*, determined using the following formula:

$$T_i = 0.3987 \times (Tts_{base} - Tts_{new})$$

Where:

Tts_{new} = the total solar transmittance of the glass, measured according to ISO 13837, ''Safety glazing materials—Method for determination of solar transmittance'' (incorporated by reference in §86.1).

Tts_{base} = 62 for the windshield, side-front, side-rear, rear-quarter, and backlite locations, and 40 for rooflite locations.

(B) *Active seat ventilation.* The passenger automobile credit is 1.0 grams/mile. The light truck credit is 1.3 grams/mile.

(C) *Solar reflective surface coating.* The passenger automobile credit is 0.4 grams/mile. The light truck credit is 0.5 grams/mile.

(D) *Passive cabin ventilation*. The passenger automobile credit is 1.7 grams/mile. The light truck credit is 2.3 grams/mile.

(E) *Active cabin ventilation*. The passenger automobile credit is 2.1 grams/mile. The light truck credit is 2.8 grams/mile.

(ix) *High efficiency alternator*. The credit for a high efficiency alternator for passenger automobiles and light trucks shall be calculated using the following equation, and rounded to the nearest 0.1 grams/mile:

$$Credit\left(\frac{g}{mi}\right) = (VDA_{HEA} - 67) \times 0.16$$

Where:

VDA_{HEA} is the ratio of the alternator output power to the power supplied to the alternator, as measured using the Verband der Automobilindustrie (VDA) efficiency measurement methodology and expressed as a whole number percent from 68 to 100.

(2) The maximum allowable decrease in the manufacturer's combined passenger automobile and light truck fleet average CO_2 emissions attributable to use of the default credit values in paragraph (b)(1) of this section is 10 grams per mile. If the total of the CO_2 g/mi credit values from paragraph (b)(1) of this section does not exceed 10 g/mi for any passenger automobile or light truck in a manufacturer's fleet, then the total off-cycle credits may be calculated according to paragraph (f) of this section. If the total of the CO_2 g/mi credit values from paragraph (b)(1) of this section exceeds 10 g/mi for any passenger automobile or light truck in a manufacturer's fleet, then the gram per mile decrease for the combined passenger automobile and light truck fleet must be determined according to paragraph (b)(2)(i) of this section to determine whether the 10 g/mi limitation has been exceeded.

(i) Determine the gram per mile decrease for the combined passenger automobile and light truck fleet using the following formula:

$$\mathbf{Decrease} = \frac{Credits \times 1{,}000{,}000}{[(\mathbf{Prod_C} \times 195{,}264) + (\mathbf{Prod_T} \times 225{,}865)]}$$

Where:

Credits = The total of passenger automobile and light truck credits, in Megagrams, determined according to paragraph (f) of this section and limited to those credits accrued by using the default gram per mile values in paragraph (b)(1) of this section.

$Prod_C$ = The number of passenger automobiles produced by the manufacturer and delivered for sale in the U.S.

$Prod_T$ = The number of light trucks produced by the manufacturer and delivered for sale in the U.S.

(ii) If the value determined in paragraph (b)(2)(i) of this section is greater than 10 grams per mile, the total credits, in Megagrams, that may be accrued by a manufacturer using the default gram per mile values in paragraph (b)(1) of this section shall be determined using the following formula:

$$\mathbf{Credit\ (Megagrams)} = \frac{[10 \times ((\mathbf{Prod_C} \times 195{,}264) + (\mathbf{Prod_T} \times 225{,}865))]}{1{,}000{,}000}$$

Where:

$Prod_C$ = The number of passenger automobiles produced by the manufacturer and delivered for sale in the U.S.

$Prod_T$ = The number of light trucks produced by the manufacturer and delivered for sale in the U.S.

(iii) If the value determined in paragraph (b)(2)(i) of this section is not greater than 10 grams per mile, then the credits that may be accrued by a manufacturer using the default gram per mile values in paragraph (b)(1) of this section do not exceed the allowable limit, and total credits may be determined for each category of vehicles according to paragraph (f) of this section.

(iv) If the value determined in paragraph (b)(2)(i) of this section is greater than 10 grams per mile, then the combined passenger automobile and light truck credits, in Megagrams, that may be accrued using the calculations in paragraph (f) of this section must not exceed the value determined in paragraph (b)(2)(ii) of this section. This limitation should generally be done by reducing the amount of credits attributable to the vehicle category that caused the limit to be exceeded such that the total value does not exceed the value determined in paragraph (b)(2)(ii) of this section.

(3) In lieu of using the default gram per mile values specified in paragraph (b)(1) of this section for specific technologies, a manufacturer may determine an alternative value for any of the specified technologies. An alternative value must be determined using one of the methods specified in paragraph (c) or (d) of this section.

(4) Definitions for the purposes of this paragraph (b) are as follows:

(i) *Active aerodynamic improvements* means technologies that are automatically activated under certain conditions to improve aerodynamic efficiency (e.g., lowering of the coefficient of drag, or Cd), while preserving other vehicle attributes or functions.

(ii) *High efficiency exterior lighting* means a lighting technology that, when installed on the vehicle, is expected to reduce the total electrical demand of the exterior lighting system when compared to conventional lighting systems. To be eligible for this credit, the high efficiency lighting must be installed in one or more of the following lighting components: low beam, high beam, parking/position, front and rear turn signals, front and rear side markers, taillights, and/or license plate lighting.

(iii) *Engine idle start-stop* means a technology which enables a vehicle to automatically turn off the engine when the vehicle comes to a rest and restarts the engine when the driver applies pressure to the accelerator or releases the brake. Off-cycle engine start-stop credits will only be allowed for a vehicle if the Administrator has made a determination under the testing and calculation provisions in 40 CFR Part 600 that engine start-stop is the predominant operating mode for that vehicle.

(iv) *Solar panels* means the external installation of horizontally-oriented solar panels, with direct and unimpeded solar exposure to an overhead sun, on an electric vehicle, a plug-in hybrid electric vehicle, a fuel cell vehicle, or a hybrid electric vehicle, such that the solar energy is used to provide energy to the electric drive system of the vehicle by charging the battery or directly providing power to the electric motor or to essential vehicle systems (e.g., cabin heating or cooling/ventilation). The rated power of the solar panels used to determine the credit value must be determined under the standard test conditions of 1,000 W/m^2 direct solar irradiance at a panel temperature of 25 ±2 °C with an air mass of 1.5 spectrum (AM1.5).

(v) *Active transmission warmup* means a system that uses waste heat from the vehicle to quickly warm the transmission fluid to an operating temperature range using a heat exchanger, increasing the overall transmission efficiency by reducing parasitic losses associated with the transmission fluid, such as losses related to friction and fluid viscosity.

(vi) *Active engine warmup* means a system that uses waste heat from the vehicle to warm up targeted parts of the engine so that it reduces engine friction losses and enables the closed-loop fuel control more quickly. It allows a faster transition from cold operation to warm operation, decreasing

CO_2 emissions, and increasing fuel economy.

(vii) *Waste heat recovery* means a system that captures heat that would otherwise be lost through the engine, exhaust system, or the radiator or other sources and converting that heat to electrical energy that is used to meet the electrical requirements of the vehicle or used to augment the warming of other load reduction technologies (e.g., cabin warming, active engine or transmission warm-up technologies). The amount of energy recovered is the average value over 5-cycle testing.

(viii) *Active seat ventilation* means a device which draws air, pushes or forces air, or otherwise transfers heat from the seating surface which is in contact with the seat occupant and exhausts it to a location away from the seat. At a minimum, the driver and front passenger seat must utilize this technology for a vehicle to be eligible for credit.

(ix) *Solar reflective surface coating* means a vehicle paint or other surface coating which reflects at least 65 percent of the impinging infrared solar energy, as determined using ASTM standards E903, E1918–06, or C1549–09 (incorporated by reference in § 86.1). The coating must be applied at a minimum to all of the approximately horizontal surfaces of the vehicle that border the passenger and luggage compartments of the vehicle, (e.g., the rear deck lid and the cabin roof).

(x) *Passive cabin ventilation* means ducts, devices, or methods which utilize convective airflow to move heated air from the cabin interior to the exterior of the vehicle.

(xi) *Active cabin ventilation* means devices which mechanically move heated air from the cabin interior to the exterior of the vehicle.

(xii) *Electric heater circulation system* means a system installed in a vehicle equipped with an engine idle start-stop system that continues to circulate heated air to the cabin when the engine is stopped during a stop-start event. This system must be calibrated to keep the engine off for a minimum of one minute when the external ambient temperature is 30 °F and when cabin heating is enabled.

(xiii) *High efficiency alternator* means an alternator where the ratio of the alternator output power to the power supplied to the alternator is greater than 67 percent, as measured using the Verband der Automobilindustrie (VDA) efficiency measurement methodology.

(c) *Technology demonstration using EPA 5-cycle methodology*. To demonstrate an off-cycle technology and to determine a CO_2 credit using the EPA 5-cycle methodology, the manufacturer shall determine the off-cycle city/highway combined carbon-related exhaust emissions benefit by using the EPA 5-cycle methodology described in 40 CFR Part 600. This method may not be used for technologies that include elements (e.g., driver-selectable systems) that require additional analyses, data collection, projections, or modeling, or other assessments to determine a national average benefit of the technology. Testing shall be performed on a representative vehicle, selected using good engineering judgment, for each model type for which the credit is being demonstrated. The emission benefit of a technology is determined by testing both with and without the off-cycle technology operating. If a specific technology is not expected to change emissions on one of the five test procedures, the manufacturer may submit an engineering analysis to the EPA that demonstrates that the technology has no effect. If EPA concurs with the analysis, then multiple tests are not required using that test procedure; instead, only one of that test procedure shall be required—either with or without the technology installed and operating—and that single value will be used for all of the 5-cycle weighting calculations. Multiple off-cycle technologies may be demonstrated on a test vehicle. The manufacturer shall conduct the following steps and submit all test data to the EPA.

(1) Testing without the off-cycle technology installed and/or operating.

(i) Determine carbon-related exhaust emissions over the FTP, the HFET, the US06, the SC03, and the cold temperature FTP test procedures according to the test procedure provisions specified in 40 CFR part 600 subpart B and using the calculation procedures specified in 40 CFR 600.113–12. Run each of these

tests a minimum of three times without the off-cycle technology installed and operating and average the per phase (bag) results for each test procedure.

(ii) Calculate the FTP and HFET carbon-related exhaust emissions from the FTP and HFET averaged per phase results.

(iii) Calculate the combined city/highway carbon-related exhaust emission value from the FTP and HFET values determined in paragraph (c)(1)(ii) of this section, where the FTP value is weighted 55% and the HFET value is weighted 45%. The resulting value is the 2-cycle unadjusted combined city/highway carbon-related exhaust emissions value for the vehicle without the off-cycle technology.

(iv) Calculate the 5-cycle weighted city/highway combined carbon-related exhaust emissions from the averaged per phase results, where the 5-cycle city value is weighted 55% and the 5-cycle highway value is weighted 45%. The resulting value is the 5-cycle adjusted combined city/highway carbon-related exhaust emission value for the vehicle without the off-cycle technology.

(2) Testing with the off-cycle technology installed and/or operating.

(i) Determine carbon-related exhaust emissions over the FTP, the HFET, the US06, the SC03, and the cold temperature FTP test procedures according to the test procedure provisions specified in 40 CFR part 600 subpart B and using the calculation procedures specified in 40 CFR 600.113–12. Run each of these tests a minimum of three times with the off-cycle technology installed and operating and average the per phase (bag) results for each test procedure.

(ii) Calculate the FTP and HFET carbon-related exhaust emissions from the FTP and HFET averaged per phase results.

(iii) Calculate the combined city/highway carbon-related exhaust emission value from the FTP and HFET values determined in paragraph (c)(2)(ii) of this section, where the FTP value is weighted 55% and the HFET value is weighted 45%. The resulting value is the 2-cycle unadjusted combined city/highway carbon-related exhaust emissions value for the vehicle with the off-cycle technology.

(iv) Calculate the 5-cycle weighted city/highway combined carbon-related exhaust emissions from the averaged per phase results, where the 5-cycle city value is weighted 55% and the 5-cycle highway value is weighted 45%. The resulting value is the 5-cycle adjusted combined city/highway carbon-related exhaust emission value for the vehicle with the off-cycle technology.

(3) Calculate the off-cycle credit in grams per mile using the following formula, rounding the result to the nearest 0.1 grams/mile:

$$Credit = (A - B) - (C - D)$$

Where:

Credit = the off-cycle benefit of the technology or technologies being evaluated, subject to EPA approval;

A = the 5-cycle adjusted combined city/highway carbon-related exhaust emission value for the vehicle without the off-cycle technology, as calculated in paragraph (c)(1)(iv) of this section;

B = 5-cycle adjusted combined city/highway carbon-related exhaust emission value for the vehicle with the off-cycle technology, as calculated in paragraph (c)(2)(iv) of this section;

C = 2-cycle unadjusted combined city/highway carbon-related exhaust emissions value for the vehicle without the off-cycle technology, as calculated in paragraph (c)(1)(iii) of this section; and

D = 2-cycle unadjusted combined city/highway carbon-related exhaust emissions value for the vehicle with the off-cycle technology, as calculated in paragraph (c)(2)(iii) of this section.

(4) Submit all test values to EPA, and include an engineering analysis describing the technology and how it provides off-cycle emission benefits. EPA may request additional testing if we determine that additional testing would be likely to provide significantly greater confidence in the estimates of off-cycle technology benefits.

(d) *Technology demonstration using alternative EPA-approved methodology.* (1) This option may be used only with EPA approval, and the manufacturer must be able to justify to the Administrator why the 5-cycle option described in paragraph (c) of this section insufficiently characterizes the effectiveness of the off-cycle technology. In cases where the EPA 5-cycle methodology described in paragraph (c) of this section

cannot adequately measure the emission reduction attributable to an off-cycle technology, the manufacturer may develop an alternative approach. Prior to a model year in which a manufacturer intends to seek these credits, the manufacturer must submit a detailed analytical plan to EPA. The manufacturer may seek EPA input on the proposed methodology prior to conducting testing or analytical work, and EPA will provide input on the manufacturer's analytical plan. The alternative demonstration program must be approved in advance by the Administrator and should:

(i) Use modeling, on-road testing, on-road data collection, or other approved analytical or engineering methods;

(ii) Be robust, verifiable, and capable of demonstrating the real-world emissions benefit with strong statistical significance;

(iii) Result in a demonstration of baseline and controlled emissions over a wide range of driving conditions and number of vehicles such that issues of data uncertainty are minimized;

(iv) Result in data on a model type basis unless the manufacturer demonstrates that another basis is appropriate and adequate.

(2) *Notice and opportunity for public comment.* (i) The Administrator will publish a notice of availability in the FEDERAL REGISTER notifying the public of a manufacturer's proposed alternative off-cycle credit calculation methodology. The notice will include details regarding the proposed methodology but will not include any Confidential Business Information. The notice will include instructions on how to comment on the methodology. The Administrator will take public comments into consideration in the final determination and will notify the public of the final determination. Credits may not be accrued using an approved methodology until the first model year for which the Administrator has issued a final approval.

(ii) The Administrator may waive these notice and comment requirements for technologies for which EPA has previously approved a methodology for determining credits. To qualify for this waiver, the new application must be substantially identical in form, content, and methodology to the application for a previously approved methodology, and must include the following:

(A) A cite to the appropriate previously approved methodology, including the appropriate FEDERAL REGISTER Notice and any subsequent EPA documentation of the Administrator's decision;

(B) All necessary manufacturer- and vehicle-specific test data, modeling, and credit calculations; and,

(C) Any other vehicle- or technology-specific details required pursuant to the previously approved methodology to assess and support an appropriate credit value.

(iii) A waiver of the notice and comment requirements does not imply a determination that a specific credit value for a given technology is appropriate, and nor does it imply a waiver from the requirements in paragraphs (d)(1) and (e) of this section.

(iv) The Administrator retains the option to require a notice and opportunity for public comment in cases where a new application deviates in significant respects from a previously approved methodology or raises novel substantive issues.

(3) With respect to fuel consumption improvement values applicable to the determination of average fuel economy under 600.510–12(c)(3) for the 2017 and later model years, EPA will consult with the U.S. Department of Transportation, National Highway Traffic Safety Administration, prior to making a decision on a manufacturer's application submitted under the requirements of this paragraph (d).

(e) *Review and approval process for off-cycle credits.* (1) *Initial steps required.* (i) A manufacturer requesting off-cycle credits under the provisions of paragraph (c) of this section must conduct the testing and/or simulation described in that paragraph.

(ii) A manufacturer requesting off-cycle credits under the provisions of paragraph (d) of this section must develop a methodology for demonstrating and determining the benefit of the off-cycle technology, and carry out any necessary testing and analysis required to support that methodology.

(iii) A manufacturer requesting off-cycle credits under paragraphs (b), (c),

or (d) of this section must conduct testing and/or prepare engineering analyses that demonstrate the in-use durability of the technology for the full useful life of the vehicle.

(2) *Data and information requirements.* The manufacturer seeking off-cycle credits must submit an application for off-cycle credits determined under paragraphs (c) and (d) of this section. The application must contain the following:

(i) A detailed description of the off-cycle technology and how it functions to reduce CO_2 emissions under conditions not represented on the FTP and HFET.

(ii) A list of the vehicle model(s) which will be equipped with the technology.

(iii) A detailed description of the test vehicles selected and an engineering analysis that supports the selection of those vehicles for testing.

(iv) All testing and/or simulation data required under paragraph (c) or (d) of this section, as applicable, plus any other data the manufacturer has considered in the analysis.

(v) For credits under paragraph (d) of this section, a complete description of the methodology used to estimate the off-cycle benefit of the technology and all supporting data, including vehicle testing and in-use activity data.

(vi) An estimate of the off-cycle benefit by vehicle model and the fleetwide benefit based on projected sales of vehicle models equipped with the technology.

(vii) An engineering analysis and/or component durability testing data or whole vehicle testing data demonstrating the in-use durability of the off-cycle technology components.

(3) *EPA review of the off-cycle credit application.* Upon receipt of an application from a manufacturer, EPA will do the following:

(i) Review the application for completeness and notify the manufacturer within 30 days if additional information is required.

(ii) Review the data and information provided in the application to determine if the application supports the level of credits estimated by the manufacturer.

(iii) For credits under paragraph (d) of this section, EPA will make the application available to the public for comment, as described in paragraph (d)(2) of this section, within 60 days of receiving a complete application. The public review period will be specified as 30 days, during which time the public may submit comments. Manufacturers may submit a written rebuttal of comments for EPA consideration or may revise their application in response to comments. A revised application should be submitted after the end of the public review period, and EPA will review the application as if it was a new application submitted under this paragraph (e)(3).

(4) *EPA decision.* (i) For credits under paragraph (c) of this section, EPA will notify the manufacturer of its decision within 60 days of receiving a complete application.

(ii) For credits under paragraph (d) of this section, EPA will notify the manufacturer of its decision after reviewing and evaluating the public comments. EPA will make the decision and rationale available to the public.

(iii) EPA will notify the manufacturer in writing of its decision to approve or deny the application, and will provide the reasons for the decision. EPA will make the decision and rationale available to the public.

(f) *Calculation of total off-cycle credits.* Total off-cycle credits in Megagrams of CO_2 (rounded to the nearest whole number) shall be calculated separately for passenger automobiles and light trucks according to the following formula:

$$\text{Total Credits (Megagrams)} = (\text{Credit} \times \text{Production} \times \text{VLM}) \div 1{,}000{,}000$$

Where:

Credit = the credit value in grams per mile determined in paragraph (b), (c) or (d) of this section.

Production = The total number of passenger automobiles or light trucks, whichever is applicable, produced with the off-cycle technology to which to the credit value determined in paragraph (b), (c), or (d) of this section applies.

VLM = vehicle lifetime miles, which for passenger automobiles shall be 195,264 and for light trucks shall be 225,865.

[77 FR 63170, Oct. 15, 2012, as amended at 81 FR 73997, Oct. 25, 2016; 85 FR 22621, Apr. 23, 2020; 85 FR 25270, Apr. 30, 2020]

§ 86.1870–12 CO_2 credits for qualifying full-size light pickup trucks.

Full-size pickup trucks may be eligible for additional credits based on the implementation of hybrid technologies or on exhaust emission performance, as described in this section. Credits may be generated under either paragraph (a) or (b) of this section for a qualifying pickup truck, but not both. The provisions of this section do not apply for heavy-duty vehicles.

(a) *Credits for implementation of hybrid electric technology*. Full size pickup trucks that implement hybrid electric technologies may be eligible for an additional credit under this paragraph (a). Pickup trucks earning the credits under this paragraph (a) may not earn the credits described in paragraph (b) of this section. To claim this credit, the manufacturer must measure the recovered energy over the Federal Test Procedure according to 40 CFR 600.116–12(d) to determine whether a vehicle is a mild or strong hybrid electric vehicle. To provide for EPA testing, the vehicle must be able to broadcast battery pack voltage via an on-board diagnostics parameter ID channel.

(1) Full size pickup trucks that are mild hybrid electric vehicles and that are produced in the 2017 through 2021 model years are eligible for a credit of 10 grams/mile. To receive this credit in a model year, the manufacturer must produce a quantity of mild hybrid electric full size pickup trucks such that the proportion of production of such vehicles, when compared to the manufacturer's total production of full size pickup trucks, is not less than the amount specified in the table below for that model year.

Model year	Required minimum percent of full size pickup trucks (percent)
2017	20
2018	30
2019	55
2020	70
2021	80

(2) Full size pickup trucks that are strong hybrid electric vehicles and that are produced in the 2017 through 2021 model years are eligible for a credit of 20 grams/mile. To receive this credit in a model year, the manufacturer must produce a quantity of strong hybrid electric full size pickup trucks such that the proportion of production of such vehicles, when compared to the manufacturer's total production of full size pickup trucks, is not less than 10 percent in that model year.

(3) If you produce both mild and strong hybrid electric full size pickup trucks but do not qualify for credits under paragraph (a)(1) or (2) of this section, your hybrid electric full size pickup trucks may be eligible for a credit of 10 grams/mile. To receive this credit in a given model year, you must produce a quantity of hybrid electric full size pickup trucks such that the proportion of combined mild and strong full size hybrid electric pickup trucks produced in a model year, when compared to your total production of full size pickup trucks, is not less than the required minimum percentages specified in paragraph (a)(1) of this section.

(b) *Credits for emission reduction performance*. Full size pickup trucks that achieve carbon-related exhaust emission values below the applicable target value determined in § 86.1818–12(c)(3) may be eligible for an additional credit. For the purposes of this paragraph (b), carbon-related exhaust emission values may include any applicable air conditioning leakage and/or efficiency credits as determined in § 86.1867 and § 86.1868. Pickup trucks earning the credits under this paragraph (b) may not earn credits described in paragraph (a) of this section and may not earn credits based on the production multipliers described in § 86.1866–12(b).

(1) Full size pickup trucks that are produced in the 2017 through 2021 model years and that achieve carbon-related exhaust emissions less than or equal to the applicable target value determined in § 86.1818–12(c)(3) multiplied by 0.85 (rounded to the nearest gram/mile) and greater than the applicable target value determined in § 86.1818–12(c)(3) multiplied by 0.80 (rounded to the nearest gram/mile) in a model year are eligible for a credit of 10 grams/mile. A pickup truck that qualifies for this credit in a model year may claim this credit for subsequent model years

through the 2021 model year if the carbon-related exhaust emissions of that pickup truck do not increase relative to the emissions in the model year in which the pickup truck qualified for the credit. To qualify for this credit in a model year, the manufacturer must produce a quantity of full size pickup trucks that meet the initial emission eligibility requirements of this paragraph (b)(1) such that the proportion of production of such vehicles, when compared to the manufacturer's total production of full size pickup trucks, is not less than the amount specified in the table below for that model year.

Model year	Required minimum percent of full size pickup truck (percent)
2017	15
2018	20
2019	28
2020	35
2021	40

(2) Full size pickup trucks that are produced in the 2017 through 2021 model years and that achieve carbon-related exhaust emissions less than or equal to the applicable target value determined in § 86.1818–12(c)(3) multiplied by 0.80 (rounded to the nearest gram/mile) in a model year are eligible for a credit of 20 grams/mile. A pickup truck that qualifies for this credit in a model year may claim this credit for a maximum of four subsequent model years (a total of five consecutive model years) if the carbon-related exhaust emissions of that pickup truck do not increase relative to the emissions in the model year in which the pickup truck first qualified for the credit. This credit may not be claimed in any model year after 2021. To qualify for this credit in a model year, the manufacturer must produce a quantity of full size pickup trucks that meet the emission requirements of this paragraph (b)(2) such that the proportion of production of such vehicles, when compared to the manufacturer's total production of full size pickup trucks, is not less than 10 percent in that model year.

(c) *Calculation of total full size pickup truck credits.* Total credits in Megagrams of CO_2 (rounded to the nearest whole number) shall be calculated for qualifying full size pickup trucks according to the following formula:

$$\text{Total Credits (Megagrams)} = ([(10 \times \text{Production}_{\text{MHEV}}) + (10 \times \text{Production}_{\text{T15}}) + (20 \times \text{Production}_{\text{SHEV}}) + (20 \times \text{Production}_{\text{T20}})] \times 225{,}865) \div 1{,}000{,}000$$

Where:

$\text{Production}_{\text{MHEV}}$ = The total number of mild hybrid electric full size pickup trucks produced with a credit value of 10 grams per mile from paragraph (a)(1) of this section.

$\text{Production}_{\text{T15}}$ = The total number of full size pickup trucks produced with a performance-based credit value of 10 grams per mile from paragraph (b)(1) of this section.

$\text{Production}_{\text{SHEV}}$ = The total number of strong hybrid electric full size pickup trucks produced with a credit value of 20 grams per mile from paragraph (a)(2) of this section.

$\text{Production}_{\text{T20}}$ = The total number of full size pickup trucks produced with a performance-based credit value of 20 grams per mile from paragraph (b)(2) of this section.

[77 FR 63174, Oct. 15, 2012, as amended at 81 FR 73997, Oct. 15, 2016; 85 FR 25271, Apr. 30, 2020]

§ 86.1871–12 Optional early CO_2 credit programs.

Manufacturers may optionally generate CO_2 credits in the 2009 through 2011 model years for use in the 2012 and later model years subject to EPA approval and to the provisions of this section. The provisions of § 86.1819–14(k)(1) and (2) apply instead of the provisions of this section for non-MDPV heavy-duty vehicles. Manufacturers may generate early fleet average credits, air conditioning leakage credits, air conditioning efficiency credits, early advanced technology credits, and early off-cycle technology credits. Manufacturers generating any credits under this section must submit an early credits report to the Administrator as required in this section. The terms ''sales'' and ''sold'' as used in this section shall mean vehicles produced for U.S. sale, where ''U.S.'' means the states and territories of the United States. The expiration date of unused CO_2 credits is based on the model year

in which the credits are earned, as described in § 86.1865–12(k)(6).

(a) *Early fleet average CO_2 reduction credits.* Manufacturers may optionally generate credits for reductions in their fleet average CO_2 emissions achieved in the 2009 through 2011 model years. To generate early fleet average CO_2 reduction credits, manufacturers must select one of the four pathways described in paragraphs (a)(1) through (4) of this section. The manufacturer may select only one pathway, and that pathway must remain in effect for the 2009 through 2011 model years. Fleet average credits (or debits) must be calculated and reported to EPA for each model year under each selected pathway.

(1) *Pathway 1.* To earn credits under this pathway, the manufacturer shall calculate an average carbon-related exhaust emission value to the nearest one gram per mile for the classes of motor vehicles identified in this paragraph (a)(1), and the results of such calculations will be reported to the Administrator for use in determining compliance with the applicable CO_2 early credit threshold values.

(i) An average carbon-related exhaust emission value calculation will be made for the combined LDV/LDT1 averaging set, where the terms LDV and LDT1 are as defined in § 86.1803.

(ii) An average carbon-related exhaust emission value calculation will be made for the combined LDT2/HLDT/MDPV averaging set, where the terms LDT2, HLDT, and MDPV are as defined in § 86.1803.

(iii) Average carbon-related exhaust emission values shall be determined according to the provisions of § 600.510–12 of this chapter, except that:

(A) [Reserved]

(B) The average carbon-related exhaust emissions for alcohol fueled model types shall be calculated according to the provisions of § 600.510–12(j)(2)(ii)(B) of this chapter, without the use of the 0.15 multiplicative factor.

(C) The average carbon-related exhaust emissions for natural gas fueled model types shall be calculated according to the provisions of § 600.510–12(j)(2)(iii)(B) of this chapter, without the use of the 0.15 multiplicative factor.

(D) The average carbon-related exhaust emissions for alcohol dual fueled model types shall be the value measured using gasoline or diesel fuel, as applicable, and shall be calculated according to the provisions of § 600.510–12(j)(2)(vi) of this chapter, without the use of the 0.15 multiplicative factor and with F = 0. For the 2010 and 2011 model years only, if the California Air Resources Board has approved a manufacturer's request to use a non-zero value of F, the manufacturer may use such an approved value.

(E) The average carbon-related exhaust emissions for natural gas dual fueled model types shall be the value measured using gasoline or diesel fuel, as applicable, and shall be calculated according to the provisions of § 600.510–12(j)(2)(vii) of this chapter, without the use of the 0.15 multiplicative factor and with F = 0. For the 2010 and 2011 model years only, if the California Air Resources Board has approved a manufacturer's request to use a non-zero value of F, the manufacturer may use such an approved value.

(F) Carbon-related exhaust emission values for electric, fuel cell, and plug-in hybrid electric model types shall be included in the fleet average determined under paragraph (a)(1) of this section only to the extent that such vehicles are not being used to generate early advanced technology vehicle credits under paragraph (c) of this section.

(iv) Fleet average CO_2 credit threshold values.

Model year	LDV/ LDT1	LDT2/ HLDT/ MDPV
2009	323	439
2010	301	420
2011	267	390

(v) Credits are earned on the last day of the model year. Manufacturers must calculate, for a given model year, the number of credits or debits it has generated according to the following equation, rounded to the nearest megagram:

CO_2 Credits or Debits (Mg) = [(CO_2 Credit Threshold − Manufacturer's Sales Weighted Fleet Average CO_2

Emissions) × (Total Number of Vehicles Sold) × (Vehicle Lifetime Miles)] ÷ 1,000,000

Where:

CO_2 Credit Threshold = the applicable credit threshold value for the model year and vehicle averaging set as determined by paragraph (a)(1)(iv) of this section;

Manufacturer's Sales Weighted Fleet Average CO_2 Emissions = average calculated according to paragraph (a)(1)(iii) of this section;

Total Number of Vehicles Sold = The number of vehicles domestically sold as defined in §600.511–80 of this chapter; and

Vehicle Lifetime Miles is 195,264 for the LDV/LDT1 averaging set and 225,865 for the LDT2/HLDT/MDPV averaging set.

(vi) Deficits generated against the applicable CO_2 credit threshold values in paragraph (a)(1)(iv) of this section in any averaging set for any of the 2009–2011 model years must be offset using credits accumulated by any averaging set in any of the 2009–2011 model years before determining the number of credits that may be carried forward to the 2012. Deficit carry forward and credit banking provisions of §86.1865–12 apply to early credits earned under this paragraph (a)(1), except that deficits may not be carried forward from any of the 2009–2011 model years into the 2012 model year, and credits earned in the 2009 model year may not be traded to other manufacturers.

(2) *Pathway 2.* To earn credits under this pathway, manufacturers shall calculate an average carbon-related exhaust emission value to the nearest one gram per mile for the classes of motor vehicles identified in paragraph (a)(1) of this section, and the results of such calculations will be reported to the Administrator for use in determining compliance with the applicable CO_2 early credit threshold values.

(i) Credits under this pathway shall be calculated according to the provisions of paragraph (a)(1) of this section, except credits may only be generated by vehicles sold in a model year in California and in states with a section 177 program in effect in that model year. For the purposes of this section, ''section 177 program'' means State regulations or other laws that apply to vehicle emissions from any of the following categories of motor vehicles: Passenger automobiles, light-duty trucks up through 6,000 pounds GVWR, and medium-duty vehicles from 6,001 to 14,000 pounds GVWR, as these categories of motor vehicles are defined in the California Code of Regulations, Title 13, Division 3, Chapter 1, Article 1, Section 1900.

(ii) A deficit in any averaging set for any of the 2009–2011 model years must be offset using credits accumulated by any averaging set in any of the 2009–2011 model years before determining the number of credits that may be carried forward to the 2012 model year. Deficit carry forward and credit banking provisions of §86.1865–12 apply to early credits earned under this paragraph (a)(1), except that deficits may not be carried forward from any of the 2009–2011 model years into the 2012 model year, and credits earned in the 2009 model year may not be traded to other manufacturers.

(3) *Pathway 3.* Pathway 3 credits are those credits earned under Pathway 2 as described in paragraph (a)(2) of this section in California and in the section 177 states determined in paragraph (a)(2)(i) of this section, combined with additional credits earned in the set of states that does not include California and the section 177 states determined in paragraph (a)(2)(i) of this section and calculated according to this paragraph (a)(3).

(i) Manufacturers shall earn additional credits under Pathway 3 by calculating an average carbon-related exhaust emission value to the nearest one gram per mile for the classes of motor vehicles identified in this paragraph (a)(3). The results of such calculations will be reported to the Administrator for use in determining compliance with the applicable CO_2 early credit threshold values.

(ii) An average carbon-related exhaust emission value calculation will be made for the passenger automobile averaging set. The term ''passenger automobile'' shall have the meaning given by the Department of Transportation at 49 CFR 523.4 for the specific model year for which the calculation is being made.

(iii) An average carbon-related exhaust emission value calculation will be made for the light truck averaging set. The term ''light truck'' shall have

the meaning given by the Department of Transportation at 49 CFR 523.5 for the specific model year for which the calculation is being made.

(iv) Average carbon-related exhaust emission values shall be determined according to the provisions of § 600.510–12 of this chapter, except that:

(A) Vehicles sold in California and the section 177 states determined in paragraph (a)(2)(i) of this section shall not be included.

(B) The average carbon-related exhaust emissions for alcohol fueled model types shall be calculated according to the provisions of § 600.510–12(j)(2)(ii)(B) of this chapter, without the use of the 0.15 multiplicative factor.

(C) The average carbon-related exhaust emissions for natural gas fueled model types shall be calculated according to the provisions of § 600.510–12(j)(2)(iii)(B) of this chapter, without the use of the 0.15 multiplicative factor.

(D) The average carbon-related exhaust emissions for alcohol dual fueled model types shall be calculated according to the provisions of § 600.510–12(j)(2)(vi) of this chapter, without the use of the 0.15 multiplicative factor and with F = 0.

(E) The average carbon-related exhaust emissions for natural gas dual fueled model types shall be calculated according to the provisions of § 600.510–12(j)(2)(vii) of this chapter, without the use of the 0.15 multiplicative factor and with F = 0.

(F) Electric, fuel cell, and plug-in hybrid electric model type carbon-related exhaust emission values shall be included in the fleet average determined under paragraph (a)(1) of this section only to the extent that such vehicles are not being used to generate early advanced technology vehicle credits under paragraph (c) of this section.

(v) Pathway 3 fleet average CO_2 credit threshold values.

(A) For 2009 and 2010 model year passenger automobiles, the fleet average CO_2 credit threshold value is 323 grams/mile.

(B) For 2009 model year light trucks the fleet average CO_2 credit threshold value is 381 grams/mile, or, if the manufacturer chose to optionally meet an alternative manufacturer-specific light truck fuel economy standard calculated under 49 CFR 533.5 for the 2009 model year, the gram per mile fleet average CO_2 credit threshold shall be the CO_2 value determined by dividing 8887 by that alternative manufacturer-specific fuel economy standard and rounding to the nearest whole gram per mile.

(C) For 2010 model year light trucks the fleet average CO_2 credit threshold value is 376 grams/mile, or, if the manufacturer chose to optionally meet an alternative manufacturer-specific light truck fuel economy standard calculated under 49 CFR 533.5 for the 2010 model year, the gram per mile fleet average CO_2 credit threshold shall be the CO_2 value determined by dividing 8887 by that alternative manufacturer-specific fuel economy standard and rounding to the nearest whole gram per mile.

(D) For 2011 model year passenger automobiles the fleet average CO_2 credit threshold value is the value determined by dividing 8887 by the manufacturer-specific passenger automobile fuel economy standard for the 2011 model year determined under 49 CFR 531.5 and rounding to the nearest whole gram per mile.

(E) For 2011 model year light trucks the fleet average CO_2 credit threshold value is the value determined by dividing 8887 by the manufacturer-specific light truck fuel economy standard for the 2011 model year determined under 49 CFR 533.5 and rounding to the nearest whole gram per mile.

(vi) Credits are earned on the last day of the model year. Manufacturers must calculate, for a given model year, the number of credits or debits it has generated according to the following equation, rounded to the nearest megagram:

$$CO_2 \text{ Credits or Debits (Mg)} = [(CO_2 \text{ Credit Threshold} - \text{Manufacturer's Sales Weighted Fleet Average } CO_2 \text{ Emissions}) \times (\text{Total Number of Vehicles Sold}) \times (\text{Vehicle Lifetime Miles})] \div 1{,}000{,}000$$

Where:

CO_2 Credit Threshold = the applicable credit threshold value for the model year and vehicle averaging set as determined by paragraph (a)(3)(v) of this section.

Manufacturer's Sales Weighted Fleet Average CO_2 Emissions = average calculated

according to paragraph (a)(3)(iv) of this section.

Total Number of Vehicles Sold = The number of vehicles domestically sold as defined in § 600.511 of this chapter except that vehicles sold in California and the section 177 states determined in paragraph (a)(2)(i) of this section shall not be included.

Vehicle Lifetime Miles is 195,264 for the LDV/LDT1 averaging set and 225,865 for the LDT2/HLDT/MDPV averaging set.

(vii) Deficits in any averaging set for any of the 2009–2011 model years must be offset using credits accumulated by any averaging set in any of the 2009–2011 model years before determining the number of credits that may be carried forward to the 2012. Deficit carry forward and credit banking provisions of § 86.1865–12 apply to early credits earned under this paragraph (a)(3), except that deficits may not be carried forward from any of the 2009–2011 model years into the 2012 model year, and credits earned in the 2009 model year may not be traded to other manufacturers.

(4) *Pathway 4.* Pathway 4 credits are those credits earned under Pathway 3 as described in paragraph (a)(3) of this section in the set of states that does not include California and the section 177 states determined in paragraph (a)(2)(i) of this section and calculated according to paragraph (a)(3) of this section. Credits may only be generated by vehicles sold in the set of states that does not include California and the section 177 states determined in paragraph (a)(2)(i) of this section.

(b) *Early air conditioning leakage and efficiency credits.* (1) Manufacturers may optionally generate air conditioning refrigerant leakage credits according to the provisions of § 86.1867 and/or air conditioning efficiency credits according to the provisions of § 86.1868 in model years 2009 through 2011. Credits must be tracked by model type and model year.

(2) Manufacturers must be participating in one of the early fleet average credit pathways described in paragraphs (a)(1), (2), or (3) of this section in order to generate early air conditioning credits for vehicles sold in California and the section 177 states as determined in paragraph (a)(2)(i) of this section. Manufacturers that select Pathway 4 as described in paragraph (a)(4) of this section may not generate early air conditioning credits for vehicles sold in California and the section 177 states as determined in paragraph (a)(2)(i) of this section. Manufacturers not participating in one of the early fleet average credit pathways described in this section may generate early air conditioning credits only for vehicles sold in states other than in California and the section 177 states as determined in paragraph (a)(2)(i) of this section.

(c) *Early advanced technology vehicle incentive.* Vehicles eligible for this incentive are electric vehicles, fuel cell vehicles, and plug-in hybrid electric vehicles, as those terms are defined in § 86.1803–01. If a manufacturer chooses to not include electric vehicles, fuel cell vehicles, and plug-in hybrid electric vehicles in their fleet averages calculated under any of the early credit pathways described in paragraph (a) of this section, the manufacturer may generate early advanced technology vehicle credits pursuant to this paragraph (c).

(1) The manufacturer shall record the sales and carbon-related exhaust emission values of eligible vehicles by model type and model year for model years 2009 through 2011 and report these values to the Administrator under paragraph (e) of this section.

(2) Manufacturers may use the 2009 through 2011 eligible vehicles in their fleet average calculations starting with the 2012 model year, subject to a five-year carry-forward limitation.

(i) Eligible 2009 model year vehicles may be used in the calculation of a manufacturer's fleet average carbon-related exhaust emissions in the 2012 through 2014 model years.

(ii) Eligible 2010 model year vehicles may be used in the calculation of a manufacturer's fleet average carbon-related exhaust emissions in the 2012 through 2015 model years.

(iii) Eligible 2011 model year vehicles may be used in the calculation of a manufacturer's fleet average carbon-related exhaust emissions in the 2012 through 2016 model years.

(3)(i) To use the advanced technology vehicle incentive, the manufacturer will apply the 2009, 2010, and/or 2011

model type sales volumes and their model type emission levels to the manufacturer's fleet average calculation.

(ii) The early advanced technology vehicle incentive must be used to offset a deficit in one of the 2012 through 2016 model years, as appropriate under paragraph (c)(2) of this section.

(iii) The advanced technology vehicle sales and emission values may be included in a fleet average calculation for passenger automobiles or light trucks, but may not be used to generate credits in the model year in which they are included or in the averaging set in which they are used. Use of early advanced technology vehicle credits is limited to offsetting a deficit that would otherwise be generated without the use of those credits. Manufacturers shall report the use of such credits in their model year report for the model year in which the credits are used.

(4) Manufacturers may use zero grams/mile to represent the carbon-related exhaust emission values for the electric operation of 2009 through 2011 model year electric vehicles, fuel cell vehicles, and plug-in hybrid electric vehicles subject to the limitations in § 86.1866. The 2009 through 2011 model year vehicles using zero grams per mile shall count against the 200,000 or 300,000 caps on use of this credit value, whichever is applicable under § 86.1866.

(d) *Early off-cycle technology credits.* Manufacturers may optionally generate credits for the implementation of certain CO_2-reducing technologies according to the provisions of § 86.1869 in model years 2009 through 2011. Credits must be tracked by model type and model year.

(e) *Early credit reporting requirements.* Each manufacturer shall submit a report to the Administrator, known as the early credits report, that reports the credits earned in the 2009 through 2011 model years under this section.

(1) The report shall contain all information necessary for the calculation of the manufacturer's early credits in each of the 2009 through 2011 model years.

(2) The early credits report shall be in writing, signed by the authorized representative of the manufacturer and shall be submitted no later than 90 days after the end of the 2011 model year.

(3) Manufacturers using one of the optional early fleet average CO_2 reduction credit pathways described in paragraph (a) of this section shall report the following information separately for the appropriate averaging sets (e.g. LDV/LDT1 and LDT2/HLDT/MDPV averaging sets for pathways 1 and 2; LDV, LDT/2011 MDPV, LDV/LDT1 and LDT2/HLDT/MDPV averaging sets for Pathway 3; LDV and LDT/2011 MDPV averaging sets for Pathway 4):

(i) The pathway that they have selected (1, 2, 3, or 4).

(ii) A carbon-related exhaust emission value for each model type of the manufacturer's product line calculated according to paragraph (a) of this section.

(iii) The manufacturer's average carbon-related exhaust emission value calculated according to paragraph (a) of this section for the applicable averaging set and region and all data required to complete this calculation.

(iv) The credits earned for each averaging set, model year, and region, as applicable.

(4) Manufacturers calculating early air conditioning leakage and/or efficiency credits under paragraph (b) of this section shall report the following information for each model year separately for passenger automobiles and light trucks and for each air conditioning system used to generate credits:

(i) A description of the air conditioning system.

(ii) The leakage and efficiency credit values and all the information required to determine these values.

(iii) The total credits earned for each averaging set, model year, and region, as applicable.

(5) Manufacturers calculating early advanced technology vehicle credits under paragraph (c) of this section shall report, for each model year and separately for passenger automobiles and light trucks, the following information:

(i) The number of each model type of eligible vehicle produced.

(ii) The carbon-related exhaust emission value by model type and model year.

(6) Manufacturers calculating early off-cycle technology credits under paragraph (d) of this section shall report, for each model year and separately for passenger automobiles and light trucks, all test results and data required for calculating such credits.

[77 FR 63175, Oct. 15, 2012, as amended at 81 FR 73998, Oct. 25, 2016]

APPENDIX I TO SUBPART S OF PART 86—VEHICLE PROCUREMENT METHODOLOGY

I. *Test Sampling:* The master owner list will be obtained from manufacturer records or owner registration lists. The list shall include all vehicle configurations of the target reality check test group within the selected mailing area. The mailing area shall be within a radius of at least 20 miles from the test site.

II. *Selection Guidelines:* The manufacturer or their representative shall make a reasonable effort to contact potential participants. Solicitation letters will be sent to potential participants in the order of their appearance on a randomized master owner list. The manufacturer or their representative shall perform the following steps:

(a) The manufacturer or their representative shall mail solicitation letters in batches. The size of each batch is at least five times the required number of vehicles to be tested for the group that year. First class mail shall be used.

(b) If the response rate is less than 20% after two to four weeks, the manufacturer or their representative shall make one more attempt and send a new solicitation package to the potential participants who have not yet responded.

(c) A telephone questionnaire will be conducted on a random selection of returned, positive-response postcards.

(d) If the required number of vehicles is not obtained, additional solicitation letters shall be sent to the next batch of potential participants in the order of their appearance on a randomized master owner list until the required number of vehicles are procured.

(e) Alternative selection methods may be used with advanced approval from the Administrator.

III. *Vehicles Not Available:* Vehicles may not be available or will not be pursued for procurement for the following reasons:

(a) The potential participant response indicates ''not willing to participate.''

(b) The customer has moved out of the area.

(c) The solicitation letter is undeliverable.

(d) The customer did not respond after two attempts.

(e) The vehicle is not in the appropriate mileage or age category.

APPENDIX II TO SUBPART S OF PART 86—AS-RECEIVED TESTING VEHICLE REJECTION CRITERIA

1. The odometer is inoperative, has been replaced, or the indicated mileage is outside the target range.
2. The emission system of the vehicle has been obviously tampered or the vehicle has been operated on leaded fuel. A manufacturer may request a vehicle be rejected because of the addition of an aftermarket security system if the manufacturer establishes that the installation would make that vehicle's emissions unrepresentative.
3. The vehicle has been used for severe duty (trailer towing for passenger cars, snow plowing, racing)
4. The vehicle has a history of extensive collision damage or major engine repair (piston, crank, cylinder head, engine block).
5. The vehicle exhibits ominous noises or serious fluid leaks from the engine or transmission, a modified exhaust system, (headers, side pipes, aftermarket catalysts, etc) or an exhaust system with an audible leak.
6. Testing the vehicle could endanger the safety of the vehicle, test facility, or individuals conducting the testing.
7. The MIL light is flashing (severe misfire indication).
8. Other items with prior agency approval.

APPENDIX III TO SUBPART S OF PART 86—AS-RECEIVED INSPECTION

Items to be recorded at time of Initial Inspection of Vehicle—

1. Date of Inspection
3. Test Group
4. Evaporative/refueling Family
5. Vehicle model
6. Odometer Reading
7. Build Date
8. MIL light on/off status
9. Readiness code status
10. Stored OBD codes
11. Any conditions referenced in appendix II to this subpart which result in vehicle being rejected from program.

Subpart T—Manufacturer-Run In-Use Testing Program for Heavy-Duty Diesel Engines

SOURCE: 70 FR 34619, June 14, 2005, unless otherwise noted.

§ 86.1901 What testing requirements apply to my engines that have gone into service?

(a) If you manufacture diesel heavy-duty engines above 8,500 lbs. GVWR

that are subject to engine-based exhaust emission standards under this part, you must test them as described in this subpart. You must measure all emissions listed in § 86.1910(d) other than PM beginning in calendar year 2005 and you must measure PM emissions beginning in calendar year 2007. *See* § 86.1930 for special provisions that may apply to manufacturers in the early years of this program.

(b) We may void your certificate of conformity for an engine family if you do not meet your obligations under this subpart. We may also void individual tests and require you to retest those vehicles or take other appropriate measures in instances where you have not performed the testing in accordance with the requirements described in this subpart.

(c) In this subpart, the term ''you'' refers to the certificate-holder for any engines subject to the requirements of this subpart.

(d) In this subpart, *round* means to round numbers according to NIST Special Publication 811(incorporated by reference in § 86.1).

[70 FR 34619, June 14, 2005, as amended at 75 FR 68459, Nov. 8, 2010]

§ 86.1905 How does this program work?

(a) You must test in-use engines from the families we select. We may select the following number of engine families for testing, except as specified in paragraph (b) of this section:

(1) We may select up to 25 percent of your engine families in any calendar year, calculated by dividing the number of engine families you certified in the model year corresponding to the calendar year by four and rounding to the nearest whole number. We will consider only engine families with annual U.S.-directed production volumes above 1,500 units in calculating the number of engine families subject to testing each calendar year under the annual 25 percent engine family limit. In addition, for model year 2007 through 2009, identical engine families that are split into two subfamilies under § 86.007–15(m)(9) will count as only one engine family. If you have only three or fewer families that each exceed an annual U.S.-directed production volume of 1,500 units, or if you have no engine families above this limit, we may select one engine family per calendar year for testing.

(2) Over any four-year period, we will not select more than the average number of engine families that you have certified over that four-year period (the model year when the selection is made and the preceding three model years), based on rounding the average value to the nearest whole number.

(b) If there is clear evidence of a nonconformity with regard to an engine family, we may select that engine family without counting it as a selected engine family under paragraph (a) of this section. We will consult with you in reaching a conclusion whether clear evidence of a nonconformity exists for any engine family. In general, there is clear evidence of a nonconformity regarding an engine family under this subpart in any of the following cases:

(1) The engine family was not remedied but is a carry-over from an engine family you tested under this subpart and was subsequently remedied based at least in part on the Phase 1 or Phase 2 testing outcomes described in § 86.1915.

(2) The engine family was not remedied but is a carry-over from an engine family that was remedied based on an EPA in-use testing program.

(c) We may select any individual engine family for testing, regardless of its production volume, as long as we do not select more than the number of engine families described in paragraph (a) of this section. We may select an engine family from the current model year or any previous model year, except that we will not select any engine families from model years before 2007 beginning in the following calendar years:

(1) 2007 for all emissions testing other than PM testing.

(2) 2011 for PM testing.

(d) You must complete all the required testing and reporting under this subpart within 18 months after we direct you to test a particular engine family. We will typically select engine families for testing and notify you in writing by June 30 of the applicable calendar year. You may ask for up to six months longer to complete Phase 2

testing if there is a reasonable basis for needing more time. In very unusual circumstances you may request an additional six months to complete Phase 2 testing.

(e) If you make a good-faith effort to access enough test vehicles to complete Phase 1 or Phase 2 testing requirements under this subpart for an engine family, but are unable to do so, you must ask us either to modify the testing requirements for the selected engine family or, in the case of Phase 1 testing, to select a different engine family.

(f) After you complete the in-use testing requirements for an engine family that we selected for testing in a given calendar year, we may select that same family in a later year to evaluate the engine family's compliance closer to the end of its useful life. This would count as an additional engine-family selection under paragraph (a) of this section, except as described in paragraph (b) of this section.

(g) For any communication related to this subpart, contact the Engine Programs Group Manager (6405-J), U.S. Environmental Protection Agency, 1200 Pennsylvania Ave., NW., Washington, DC 20460.

[70 FR 34619, June 14, 2005, as amended at 73 FR 13450, Mar. 13, 2008; 75 FR 68459, Nov. 8, 2010]

§ 86.1908 How must I select and screen my in-use engines?

(a) Once we direct you to do testing under this subpart, you must make arrangements to select test vehicles and engines that meet the following criteria:

(1) The engines must be representative of the engine family.

(2) The usage of the vehicles must be representative of typical usage for the vehicles' particular application.

(3) The vehicles come from at least two independent sources.

(4) The key vehicle/engine systems (e.g., power train, drive train, emission control) have been properly maintained and used.

(5) The engines have not been tampered with, rebuilt or undergone major repair that could be expected to affect emissions.

(6) The engines have not been misfueled. For example, an engine may be considered misfueled if operated on a biodiesel fuel blend that is either not listed as allowed or otherwise indicated to be an unacceptable fuel in the vehicle's owner or operator manual.

(7) The engines do not have an illuminated MIL or stored OBD trouble code that lead you to reject the vehicle from the test program as described in § 86.1910(b)(2).

(8) The vehicles are likely to operate for at least three hours (excluding idle) over a complete shift-day, as described in § 86.1910(g).

(9) The vehicles have not exceeded the applicable useful life, in miles or years (see subpart A of this part); you may otherwise not exclude engines from testing based on their age or mileage.

(10) The vehicle has appropriate space for safe and proper mounting of the PEMS equipment.

(b) You must keep any records of a vehicle's maintenance and use history you obtain from the owner or operator, as required by § 86.1925. You must report the engine's maintenance and use history and information related to the OBD system, as described in § 86.1920.

(c) You must notify us before rejecting a candidate vehicle for reasons other than failing to meet the acceptance criteria in paragraph (a) of this section. A candidate vehicle is any prospective vehicle you have identified to potentially fulfill your testing requirements under this subpart. Include your reasons for rejecting each vehicle. If an owner declines to participate in the test program, you may reject the vehicle without prior notification. Such a rejection must be reported as described in § 86.1920. We may allow you to replace the rejected vehicle with another candidate vehicle to meet your testing requirements for the specific engine family.

(d) You must report when, how, and why you reject candidate vehicles, as described in § 86.1920.

§ 86.1910 How must I prepare and test my in-use engines?

(a) You must limit maintenance to what is in the owners manual for engines with that amount of service and

age. For anything we consider an adjustable parameter (*see* §§ 86.094–21(b)(1)(ii) and 86.094–22(e)), you may adjust that parameter only if it is outside of its adjustable range. You must then set the adjustable parameter to the mid-point of its adjustable range or your recommended setting, unless we approve your request to do otherwise. You must receive permission from us before adjusting anything not considered to be an adjustable parameter. You must keep records of all maintenance and adjustments, as required by § 86.1925. You must send us these records, as described in § 86.1920(b)(3)(x), unless we instruct you not to send them.

(b) You may treat a vehicle with an illuminated MIL or stored trouble code as follows:

(1) If the length of MIL illumination or trouble code storage is consistent with proper maintenance and use, either test the prospective test vehicle as received or repair the vehicle before testing. If you elect to repair the vehicle/engine, but ultimately determine that repairs cannot be completed in a timely manner, you may reject the vehicle from the test program and replace it with another vehicle. If you repair or reject the vehicle, you must describe the MIL or trouble code information in your report under § 86.1920.

(2) If the length of MIL illumination or trouble code storage is inconsistent with proper maintenance and use, either test the prospective test vehicle as received, repair the vehicle before testing, or reject the vehicle from the test program and replace it with another vehicle. If you repair or reject the vehicle, you must describe the MIL or trouble code information in your report under § 86.1920.

(3) If a MIL is illuminated or a trouble code is set during an in-use test, do one of the following:

(i) Stop the test, repair the vehicle, and restart the testing. In this case, only the portion of the full test results without the MIL illuminated or trouble code set would be used in the vehicle-pass determination as described in § 86.1912. Describe the MIL or trouble code information in your report under § 86.1920.

(ii) Stop the test, repair the vehicle, and initiate a new test. In this case, only the post-repair test results would be used in the vehicle-pass determination as described in § 86.1912. Describe the MIL or trouble code information in your report under § 86.1920.

(iii) If three hours of non-idle operation have been accumulated prior to the time a MIL is illuminated or trouble code set, stop the test and use the accumulated test results in the vehicle-pass determination as described in § 86.1912.

(iv) If three hours of non-idle operation have not been accumulated prior to the time a MIL is illuminated or trouble code is set, and you elect to repair the vehicle/engine, but ultimately determine that repairs cannot be completed in a timely manner, you may reject the vehicle from the test program and replace it with another vehicle. If you repair or reject the vehicle, you must describe the MIL or trouble code information in your report under § 86.1920.

(c) Use appropriate fuels for testing, as follows:

(1) You may use any diesel fuel that meets the specifications for No. 2–D S500 or No. 2–D S15 in ASTM D 975 (incorporated by reference in § 86.1), as required in the calendar year that in-use testing occurs.

(2) You may use any biodiesel fuel blend that is either expressly allowed or not otherwise indicated as an unacceptable fuel in the vehicle's owner or operator manual or in the engine manufacturer's published fuel recommendations.

(3) You may drain a prospective test vehicle's fuel tank(s) and refill the tank(s) with diesel fuel conforming to ASTM D 975 specifications described in paragraph (c)(1) of this section.

(4) Any fuel that is added to the fuel tank(s) of a prospective test vehicle, or during an in-use test, must be purchased at a local retail establishment near the site of vehicle procurement or screening, or along the test route. Alternatively, the fuel may be drawn from a central fueling source, provided that the fuel used is representative of that which is commercially available in the area where the vehicle is operated.

(5) No post-refinery fuel additives are allowed, except that one or more specific fuel additives may be used during in-use testing if you can document that the owner/operator of the prospective test vehicle has a history of normally using the fuel treatment(s), and the fuel additive(s) is not prohibited in the vehicle's owner or operator manual or in the engine manufacturer's published fuel-additive recommendations.

(6) You may take fuel samples from test vehicles to ensure that appropriate fuels were used during in-use testing. If a vehicle fails the vehicle-pass criteria and you can show that an inappropriate fuel was used during the failed test, that particular test may be voided. You may drain the vehicle's fuel tank(s) and refill the tank(s) with diesel fuel conforming to the ASTM D 975 specifications described in paragraph (c)(1) of this section. You must report any fuel tests that are the basis of voiding a test in your report under § 86.1920.

(d) You must test the selected engines while they remain installed in the vehicle. Use portable emission sampling equipment and field-testing procedures referenced in § 86.1375. Measure emissions of THC, NMHC (by any method specified in 40 CFR part 1065, subpart J), CO, NO_X, PM (as appropriate), and CO_2. Measure or determine O_2 emissions using good engineering judgment.

(e) For Phase 1 testing, you must test the engine under conditions reasonably expected to be encountered during normal vehicle operation and use consistent with the general NTE requirements described in § 86.1370–2007(a). For the purposes of this subpart, normal operation and use would generally include consideration of the vehicle's normal routes and loads (including auxiliary loads such as air conditioning in the cab), normal ambient conditions, and the normal driver.

(f) For Phase 2 testing, we may give specific directions, as described in § 86.1915(c)(2).

(g) Once an engine is set up for testing, test the engine for at least one shift-day. To complete a shift-day's worth of testing, start sampling at the beginning of a shift and continue sampling for the whole shift, subject to the calibration requirements of the portable emissions measurement systems. A shift-day is the period of a normal workday for an individual employee. If the first shift-day of testing does not involve at least 3 hours of accumulated non-idle operation, repeat the testing for a second shift-day and report the results from both days of testing. If the second shift-day of testing also does not result in at least 3 hours of accumulated non-idle operation, you may choose whether or not to continue testing with that vehicle. If after two shift-days you discontinue testing before accumulating 3 hours of non-idle operation on either day, evaluate the valid NTE samples from both days of testing as described in § 86.1912 and include the data in the reporting and record keeping requirements specified in §§ 86.1920 and 1925. Count the engine toward meeting your testing requirements under this subpart and use the data for deciding whether additional engines must be tested under the applicable Phase 1 or Phase 2 test plan.

(h) You have the option to test longer than the two shift-day period described in paragraph (g) of this section.

(i) You may count a vehicle as meeting the vehicle-pass criteria described in § 86.1912 if a shift day of testing or two-shift days of testing (with the requisite non-idle/idle operation time as in paragraph (g) of this section), or if the extended testing you elected under paragraph (h) of this section does not generate a single valid NTE sampling event, as described in § 86.1912(b). Count the vehicle towards meeting your testing requirements under this subpart.

(j) You may ask us to waive measurement of particular emissions if you can show that in-use testing for such emissions is not necessary.

[70 FR 34619, June 14, 2005, as amended at 75 FR 22981, Apr. 30, 2010; 75 FR 68459, Nov. 8, 2010, as amended at 81 FR 73998, Oct. 25, 2016]

§ 86.1912 How do I determine whether an engine meets the vehicle-pass criteria?

In general, the average emissions for each regulated pollutant must remain at or below the NTE threshold in paragraph (a) of this section for at least 90 percent of the valid NTE sampling

events, as defined in paragraph (b) of this section. For 2007 through 2009 model year engines, the average emissions from every NTE sampling event must also remain below the NTE thresholds in paragraph (g)(2) of this section. Perform the following steps to determine whether an engine meets the vehicle-pass criteria:

(a) Determine the NTE threshold for each pollutant subject to an NTE standard by adding all three of the following terms and rounding the result to the same number of decimal places as the applicable NTE standard:

(1) The applicable NTE standard.

(2) The in-use compliance testing margin specified in § 86.007–11(h), if any.

(3) An accuracy margin for portable in-use equipment when testing is performed under the special provisions of § 86.1930, depending on the pollutant, as follows:

(i) NMHC: 0.17 g/hp·hr.

(ii) CO: 0.60 g/hp·hr.

(iii) NO_X: 0.50 g/hp·hr.

(iv) PM: 0.10 g/hp·hr.

(v) NO_X + NMHC: 0.67 g/hp·hr.

(4) Accuracy margins for portable in-use equipment when testing is not performed under the special provisions of § 86.1930 for 2007 through 2009 model year engine families that are selected for testing in any calendar year as follows:

(i) NMHC using the emission calculation method specified in 40 CFR 1065.650(a)(1): 0.02 g/hp·hr.

(ii) NMHC using the emission calculation method specified in 40 CFR 1065.650(a)(3): 0.01 g/hp·hr.

(iii) NMHC using an alternative emission calculation method we approve under 40 CFR 1065.915(d)(5)(iv): 0.01 g/hp·hr.

(iv) CO using the emission calculation method specified in 40 CFR 1065.650(a)(1): 0.5 g/hp·hr.

(v) CO using the emission calculation method specified in 40 CFR 1065.650(a)(3): 0.25 g/hp·hr.

(vi) CO using an alternative emission calculation method we approve under 40 CFR 1065.915(d)(5)(iv): 0.25 g/hp·hr.

(vii) NO_X using the emission calculation method specified in 40 CFR 1065.650(a)(1): 0.45 g/hp·hr.

(viii) NO_X using the emission calculation method specified in 40 CFR 1065.650(a)(3): 0.15 g/hp·hr.

(ix) NO_X using an alternative emission calculation method we approve under 40 CFR 1065.915(d)(5)(iv): 0.15 g/hp·hr.

(x) NO_X + NMHC using the emission calculation method specified in 40 CFR 1065.650(a)(1): 0.47 g/hp·hr.

(xi) NO_X + NMHC using the emission calculation method specified in 40 CFR 1065.650(a)(3): 0.16 g/hp·hr.

(xii) NO_X + NMHC using an alternative emission calculation method we approve under 40 CFR 1065.915(d)(5)(iv): 0.16 g/hp·hr.

(xiii) PM: 0.006 g/hp·hr.

(5) Accuracy margins for portable in-use equipment when testing is not performed under the special provisions of § 86.1930 for 2010 or later model year engines families that are selected for testing in any calendar year as follows:

(i) NMHC using any emission calculation method specified in 40 CFR 1065.650(a) or an alternative emission calculation method we approve under 40 CFR 1065.915(d)(5)(iv): 0.01 g/hp·hr.

(ii) CO using any emission calculation method specified in 40 CFR 1065.650(a) or an alternative emission calculation method we approve under 40 CFR 1065.915(d)(5)(iv): 0.25 g/hp·hr.

(iii) NO_X using any emission calculation method specified in 40 CFR 1065.650(a) or an alternative emission calculation method we approve under 40 CFR 1065.915(d)(5)(iv): 0.15 g/hp·hr.

(iv) PM: 0.006 g/hp·hr.

(b) For the purposes of this subpart, a valid NTE sampling event consists of at least 30 seconds of continuous operation in the NTE control area. An NTE event begins when the engine starts to operate in the NTE control area and continues as long as engine operation remains in this area (see § 86.1370). When determining a valid NTE sampling event, exclude all engine operation in approved NTE limited testing regions under § 86.1370–2007(b)(6) and any approved NTE deficiencies under § 86.007–11(a)(4)(iv). Engine operation in the NTE control area of less than 30 contiguous seconds does not count as a valid NTE sampling event; operating periods of less than 30 seconds in the NTE control area, but outside of any

allowed deficiency area or limited testing region, will not be added together to make a 30 second or longer event. Exclude any portion of a sampling event that would otherwise exceed the 5.0 percent limit for the time-weighted carve-out defined in §86.1370–2007(b)(7). For EGR-equipped engines, exclude any operation that occurs during the cold-temperature operation defined by the equations in §86.1370–2007(f)(1).

(c) Calculate the average emission level for each pollutant over each valid NTE sampling event as specified in 40 CFR part 1065, subpart G, using each NTE event as an individual test interval. This should include valid NTE events from all days of testing.

(d) If the engine has an open crankcase, account for these emissions by adding 0.00042 g/hp·hr to the PM emission result for every NTE event.

(e) Calculate a time-weighted vehicle-pass ratio (R_{pass}) for each pollutant. To do this, first sum the time from each valid NTE sampling event whose average emission level is at or below the NTE threshold for that pollutant, then divide this value by the sum of the engine operating time from all valid NTE events for that pollutant. Round the resulting vehicle-pass ratio to two decimal places.

(1) Calculate the time-weighted vehicle-pass ratio for each pollutant as follows:

$$R_{pass} = \frac{\sum_{m=1}^{n_{pass}} t}{\sum_{k=1}^{n_{total}} t}$$

Where:

n_{pass} = the number of valid sampling events for which the average emission level is at or below the NTE threshold.

n_{total} = the total number of valid NTE sampling events.

(2) For both the numerator and the denominator of the vehicle-pass ratio, use the smallest of the following values for determining the duration, t, of any NTE sampling event:

(i) The measured time in the NTE zone that is valid for an NTE sampling event.

(ii) 600 seconds.

(iii) 10 times the length of the shortest valid NTE sampling event for all testing with that engine.

(f) The following example illustrates how to select the duration of NTE sampling events for calculations, as described in paragraph (f) of this section:

NTE sample	Duration of NTE sample (seconds)	Duration limit applied?	Duration used in calculations (seconds)
1	45	No	45
2	168	No	168
3	605	Yes. Use 10 times shortest valid NTE	450
4	490	Yes. Use 10 times shortest valid NTE	450
5	65	No	65

(g) Engines meet the vehicle-pass criteria under this section if they meet both of the following criteria:

(1) The vehicle-pass ratio calculated according to paragraph (e) of this section must be at least 0.90 for each pollutant.

(2) For model year 2007 through 2009 engines, emission levels from every valid NTE sampling event must be less than 2.0 times the NTE thresholds calculated according to paragraph (a) of this section for all pollutants, except that engines certified to a NO_X FEL at

or below 0.50 g/hp·hr may meet the vehicle-pass criteria for NO_X if measured NO_X emissions from every valid NTE sample are less than either 2.0 times the NTE threshold for NO_X or 2.0 g/hp·hr, whichever is greater.

[81 FR 73998, Oct. 25, 2016]

§ 86.1915 What are the requirements for Phase 1 and Phase 2 testing?

For all selected engine families, you must do the following:

(a) To determine the number of engines you must test from each selected engine family under Phase 1 testing, use the following criteria:

(1) Start by measuring emissions from five engines using the procedures described in § 86.1375. If all five engines comply fully with the vehicle-pass criteria in § 86.1912 for all pollutants, you may stop testing. This completes your testing requirements under this subpart for the applicable calendar year for that engine family.

(2) If one of the engines tested under paragraph (a)(1) of this section fails to comply fully with the vehicle-pass criteria in § 86.1912 for one or more pollutants, test one more engine. If this additional engine complies fully with the vehicle-pass criteria in § 86.1912 for all pollutants, you may stop testing. This completes your testing requirements under this subpart for the applicable calendar year for that engine family.

(3) If your testing results under paragraphs (a)(1) and (2) of this section do not satisfy the criteria for completing your testing requirements under those paragraphs for all pollutants, test four additional engines so you have tested a total of ten engines.

(4) An engine that fails to fully comply with the vehicle-pass criteria in § 86.1912 for any pollutant does not comply with the vehicle-pass criteria in § 86.1912 for the purposes of determining the number of engines to test from each selected engine family under this paragraph.

(b) For situations where a total of ten engines must be tested under paragraph (a)(3) of this section, the results of Phase 1 testing lead to the following outcomes:

(1) If at least eight of the ten engines comply fully with the vehicle-pass criteria in § 86.1912 for all pollutants, you may stop testing. This completes your testing requirements under this subpart for the applicable calendar year for that engine family.

(2) If six or seven vehicles from the Phase 1 sample of test vehicles comply fully with the vehicle-pass criteria in § 86.1912 for all pollutants, then you must engage in follow-up discussions with us to determine whether any further testing (including Phase 2 testing), data submissions, or other actions may be warranted.

(3) If fewer than six of the ten engines tested under paragraph (a) of this section comply fully with the vehicle-pass criteria in § 86.1912 for all pollutants, we may require you to initiate Phase 2 testing, as described in paragraph (c) of this section.

(4) You may under any circumstances elect to conduct Phase 2 testing following the completion of Phase 1 testing. All the provisions of paragraph (c) of this section apply to this Phase 2 testing.

(c) If you perform Phase 2 testing for any reason, test your engines as follows:

(1) You must test ten additional engines using the test procedures described in § 86.1375, unless we require you to test fewer vehicles.

(2) We may give you any of the following additional directions in selecting and testing engines:

(i) We may require you to select a certain subset of your engine family. This may include, for example, engines within a specific power range, engines used in particular applications, or engines installed in vehicles from a particular manufacturer.

(ii) We may direct you to test engines in a way that simulates the type of driving and ambient conditions associated with high emissions experienced during Phase 1 testing.

(iii) We may direct you to test engines in a specific state or any number of contiguous states.

(iv) We may direct you to select engines from the same sources used for previous testing, or from different sources.

(v) We may require that you complete your testing and reporting under Phase 2 within a certain period. This period may not be shorter than three

months and must allow a reasonable amount of time to identify and test enough vehicles. We would generally expect this testing to be completed within the overall time period specified in § 86.1905(d).

§ 86.1917 How does in-use testing under this subpart relate to the emission-related warranty in Section 207(a)(1) of the Clean Air Act?

(a) An exceedance of the NTE found through the in-use testing program under this subpart is not by itself sufficient to show a breach of warranty under Clean Air Act section 207(a)(1) (42 U.S.C. 7541(a)(1)). A breach of warranty would also require one of the following things:

(1) That, at the time of sale, the engine or vehicle was designed, built, and equipped in a manner that does not conform in all material respects reasonably related to emission controls to the engine as described in the application for certification and covered by the certificate; or

(2) A defect in materials or workmanship of a component causes the vehicle or engine to fail to conform to the applicable regulations for its useful life.

(b) To the extent that in-use NTE testing does not reveal such a material deficiency at the time of sale in the design or manufacture of an engine compared with the certified engine, or a defect in the materials and workmanship of a component or part, test results showing an exceedance of the NTE by itself would not show a breach of the warranty under 42 U.S.C. 7541(a)(1).

§ 86.1920 What in-use testing information must I report to EPA?

(a) Send us electronic reports at *inuse@epa.gov* using an approved information format. If you want to use a different format, send us a written request with justification.

(b) Within 45 days after the end of each calendar quarter, send us reports containing the test data from each engine for which testing was completed during the calendar quarter. Alternatively, you may separately send us the test data within 30 days after you complete testing for an engine. If you request it, we may allow additional time to send us this information. Once you send us information under this section, you need not send that information again in later reports. Prepare your test reports as follows:

(1) For each engine family, describe how you recruited vehicles. Describe how you used any criteria or thresholds to narrow your search or to screen individual vehicles.

(2) Include a summary of the candidate vehicles you have rejected and the reasons you rejected them, whether you base the rejection on the criteria in § 86.1908(a) or anything else. If you rejected a candidate vehicle due to misfueling, included the results of any fuel sample tests.

(3) For the test vehicle, include the following background information:

(i) The EPA engine-family designation, and the engine's model number, total displacement, and power rating.

(ii) The applicable test phase (Phase 1 or Phase 2).

(iii) The date EPA selected the engine family for testing.

(iv) The vehicle's make and model and the year it was built.

(v) The vehicle identification number and engine serial number.

(vi) The vehicle's type or application (such as delivery, line haul, or dump truck). Also, identify the type of trailer, if applicable.

(vii) The vehicle's maintenance and use history.

(viii) The known status history of the vehicle's OBD system and any actions the owner or operator took to address OBD trouble codes or MIL illumination over the vehicle's lifetime.

(ix) Any OBD codes or MIL illumination that occur after you accept the vehicle for in-use testing under this subpart.

(x) Any steps you take to maintain, adjust, modify, or repair the vehicle or its engine to prepare for or continue testing, including actions to address OBD trouble codes or MIL illumination. Include any steps you took to drain and refill the vehicle's fuel tank(s) to correct misfueling, and the results of any fuel test conducted to identify misfueling.

(4) For each test, include the following data and measurements:

(i) The date and time of testing, and the test number.

(ii) Shift-days of testing (*see* § 86.1910 (g)), duration of testing, and the total hours of non-idle operation.

(iii) Route and location of testing. You may base this description on the output from a global-positioning system.

(iv) The steps you took to ensure that vehicle operation during testing was consistent with normal operation and use, as described in § 86.1910(e).

(v) Fuel test results, if fuel was tested under § 86.1908 or § 86.1910.

(vi) The vehicle's mileage at the start of the test. Include the engine's total lifetime hours of operation, if available.

(vii) Ambient temperature, dewpoint, and atmospheric pressure at the start and finish of each valid NTE event.

(viii) The number of valid NTE events (*see* § 86.1912(b)).

(ix) Average emissions for each pollutant over each valid NTE event. Describe the method you used to determine NMHC as specified in 40 CFR part 1065, subpart J. See appendix I of this subpart for an example of graphically summarizing NTE emission results.

(x) Exhaust-flow measurements.

(xi) Vehicle-pass ratios (*see* § 86.1912(d)).

(xii) Recorded one-hertz test data, including, but not limited to, the following parameters:

(A) Ambient temperature.

(B) Ambient pressure.

(C) Ambient humidity.

(D) Altitude.

(E) Emissions of THC, NMHC, CO, CO_2 or O_2, and NO_X (as appropriate). Report results for PM if it was measured in a manner that provides one-hertz test data. Report results for CH_4 if it was measured and used to determine NMHC.

(F) Differential back-pressure of any PEMS attachments to vehicle exhaust.

(G) Exhaust flow.

(H) Exhaust aftertreatment temperatures, if the engine meets the specifications of § 86.1370–2007(g).

(I) Engine speed.

(J) Engine brake torque.

(K) Engine coolant temperature.

(L) Intake manifold temperature.

(M) Intake manifold pressure.

(N) Throttle position.

(O) Any parameter sensed or controlled in order to modulate the emission-control system or fuel-injection timing.

(5) For each engine family, identify the applicable requirements, as follows:

(i) The applicable NTE thresholds.

(ii) Vehicle and engine information needed to identify the limited testing regions under § 86.1370–2007(b)(6) and (7).

(iii) Vehicle and engine information needed to identify any approved NTE deficiencies under § 86.007–11(a)(4)(iv).

(6) Include the following summary information after you complete testing with the engine:

(i) State whether the engine meets the vehicle-pass criteria in § 86.1912(f).

(ii) Identify how many engines you have tested from the applicable engine family and how many engines still need to be tested.

(iii) Identify how many engines from an engine family have passed the vehicle-pass criteria and the number that have failed the vehicle-pass criteria (see § 86.1912(f)).

(iv) If possible, state the outcome of Phase 1 testing for the engine family based on the criteria in § 86.1915(b).

(c) In your reports under this section, you must do all the following:

(1) Include results from all emission testing required under this subpart.

(2) Describe if any testing or evaluations were conducted to determine why a vehicle failed the vehicle-pass criteria in § 86.1912.

(3) Describe the purpose of any diagnostic procedures you conduct.

(4) Describe any instances in which the OBD system illuminated the MIL or set trouble codes. Also describe any approved actions taken to address the trouble codes or MIL.

(5) Describe any instances of misfueling, the approved actions taken to address the problem, and the results of any associated fuel sample testing.

(6) Describe any incomplete or invalid tests that were conducted under this subpart.

(d) Send us an electronic notification at *inuse@epa.gov* describing any voluntary vehicle/engine emission evaluation testing you intend to conduct with portable in-use measurement systems on the same engine families that are

being tested under this subpart, from the time that engine family was selected for in-use testing under § 86.1905 until the final results of all testing for that engine family are reported to us under this section.

(e) Send us an electronic notification at *application-ci_cert@epa.gov* within 15 days after your initial review of the test data for a selected engine family indicates that three engines in Phase 1 testing have failed to comply with the vehicle-pass criteria. Similarly, send us an electronic notification at the above electronic address within 3 days after your initial review of the test data for a selected engine family indicates that *any* engine in Phase 2 testing failed to comply with the vehicle-pass criteria.

(f) We may ask you to send us less information in your reports than we specify in this section.

(g) We may require you to send us more information to evaluate whether your engine family meets the requirements of this part, or to help inform potential decisions concerning Phase 2 testing under § 86.1915.

[70 FR 34619, June 14, 2005, as amended at 75 FR 68460, Nov. 8, 2010; 81 FR 73999, Oct. 25, 2016]

§ 86.1925 What records must I keep?

(a) Organize and maintain your records as described in this section. We may review your records at any time, so it is important to keep required information readily available.

(b) Keep the following paper or electronic records of your in-use testing for five years after you complete all the testing required for an engine family:

(1) Keep a copy of the reports described in § 86.1920.

(2) Keep any additional records, including forms you create, related to any of the following:

(i) The procurement and vehicle-selection process described in § 86.1908, including the vehicle owner's name, address, phone number, and e-mail address.

(ii) Pre-test maintenance and adjustments to the engine performed under § 86.1910.

(iii) Test results for all void, incomplete, and voluntary testing described in § 86.1920.

(iv) Evaluations to determine why a vehicle failed the vehicle-pass criteria described in § 86.1912.

(3) Keep a copy of the relevant calibration results required by 40 CFR part 1065.

§ 86.1930 What special provisions apply from 2005 through 2010?

(a) We may direct you to test engines under this subpart for emissions other than PM in 2005 and 2006, and for PM emissions in 2007 through 2010. In those interim periods, all the provisions of this subpart apply, except as specified in this paragraph (a). You may apply the exceptions identified in this section for both years of the applicable years for emissions other than PM. You may omit testing and reporting in two of the four applicable years for PM emissions.

(1) We will select engine families for testing of emissions other than PM only when the manufacturer's Statement of Compliance specifically describes the family as being designed to comply with NTE requirements.

(2) We will not direct you to do the Phase 2 testing in § 86.1915(c), regardless of measured emission levels.

(3) For purposes of calculating the NTE thresholds under § 86.1912(a) for any 2006 and earlier model year engine that is not subject to the emission standards in § 86.007–11, determine the applicable NTE standards as follows:

(i) If any numerical NTE requirements specified in the terms of any consent decree apply to the engine family, use those values as the NTE standards for testing under this subpart.

(ii) If a numerical NTE requirement is not specified in a consent decree for the engine family, the NTE standards are 1.25 times the applicable FELs or the applicable emission standards specified in § 86.004–11(a)(1) or § 86.098–11(a)(1).

(4) In the report required in § 86.1920(b), you must submit the deficiencies and limited testing region reports (see §§ 86.007–11(a)(4)(iv) and 86.1370–2007(b)(6) and (7)) for 2006 and earlier model year engines tested under this section.

(5) You must notify the Designated Compliance Officer by September 30,

2010 whether or not you will submit test reports for PM emissions for each of the four years from 2007 through 2010. See 40 CFR 1068.30 for the contact information for the Designated Compliance Officer.

(6) You must submit reports by the deadlines specified in paragraph (b) of this section.

(b) The following deadlines apply for reporting test results under this subpart:

(1) You must complete all the required testing and reporting under this subpart related to emissions other than PM by the following dates:

(i) November 30, 2007 for engine families that we designate for testing in 2005.

(ii) November 30, 2008 for engine families that we designate for testing in 2006.

(iii) November 30, 2009 for engine families that we designate for testing in 2007.

(iv) March 31, 2010 for engine families we designate for testing in 2008.

(v) April 30, 2011 for engine families we designate for testing in 2009.

(2) You must complete all the required testing and reporting under this subpart related to PM emissions by the following dates:

(i) May 31, 2010 for engine families that we designate for testing in 2007.

(ii) September 30, 2010 for engine families we designate for testing in 2008.

(iii) April 30, 2011 for engine families we designate for testing in 2009.

(iv) November 30, 2011 for engine families we designate for testing in 2009.

(c) For 2007 through 2009 all the provisions of this subpart and paragraph (a) of this section apply, with the following additional exceptions:

(1) You must complete all the required testing and reporting under this subpart by the following dates:

(i) November 30, 2009 for engine families that we designate for non-PM testing in 2007.

(ii) March 31, 2010 for engine families that we designate for non-PM testing in 2008.

(iii) April 30, 2011 for engine families that we designate for non-PM testing in 2009.

(2) You may conduct non-PM and PM testing on different vehicles for engine families that we designate in 2007 and 2008.

(3) You may conduct PM testing as follows for 2007:

(i) Test vehicles may be selected from a vehicle fleet that you own or otherwise directly control.

(ii) Test vehicles may be operated by a driver that you employ.

(iii) Each test vehicle must be operated on a route and under operating conditions that reasonably replicate the use of the selected vehicle type when operated in typical revenue service, unless otherwise approved by us.

[70 FR 34619, June 14, 2005, as amended at 73 FR 13451, Mar. 13, 2008; 75 FR 68460, Nov. 8, 2010]

APPENDIX I TO SUBPART T OF PART 86—SAMPLE GRAPHICAL SUMMARY OF NTE EMISSION RESULTS

The following figure shows an example of a graphical summary of NTE emission results:

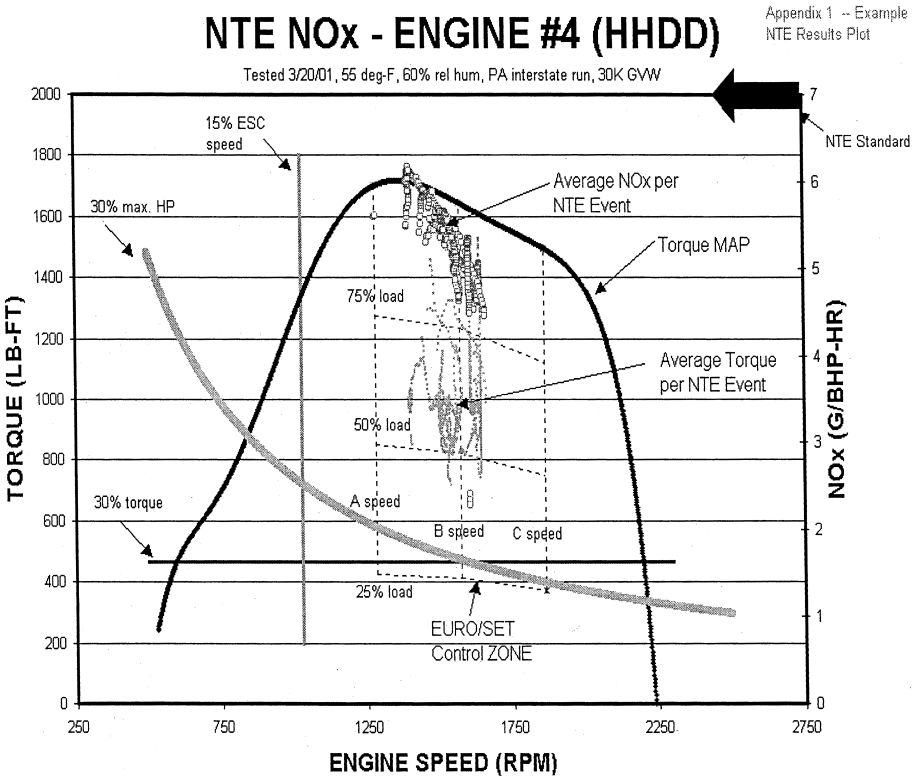

§§ 86.1931–86.1999 [Reserved]

APPENDIX I TO PART 86—DYNAMOMETER SCHEDULES

(a) *EPA light-duty urban dynamometer driving schedule (UDDS).* This driving schedule is also known as the LA–4 cycle.

(1) The driving schedule in this paragraph (a) applies for light-duty vehicles, light-duty trucks, and heavy-duty vehicles certified under subpart S of this part.

(2) The driving schedule in this paragraph (a) applies for motorcycles with engine displacement at or above 170 cc. Calculate the speed-versus-time sequence in kilometers per hour by multiplying the listed speed by 1.6 and rounding to the nearest 0.1 kilometers per hour.

(3) The driving schedule follows:

EPA URBAN DYNAMOMETER DRIVING SCHEDULE

[Speed versus Time Sequence]

Time (sec.)	Speed (m.p.h.)	Time (sec.)	Speed (m.p.h.)	Time (sec.)	Speed (m.p.h.)
0	0.0	1	0.0	2	0.0
3	0.0	4	0.0	5	0.0
6	0.0	7	0.0	8	0.0
9	0.0	10	0.0	11	0.0
12	0.0	13	0.0	14	0.0
15	0.0	16	0.0	17	0.0
18	0.0	19	0.0	20	0.0
21	3.0	22	5.9	23	8.6
24	11.5	25	14.3	26	16.9
27	17.3	28	18.1	29	20.7
30	21.7	31	22.4	32	22.5
33	22.1	34	21.5	35	20.9
36	20.4	37	19.8	38	17.0
39	14.9	40	14.9	41	15.2
42	15.5	43	16.0	44	17.1
45	19.1	46	21.1	47	22.7
48	22.9	49	22.7	50	22.6
51	21.3	52	19.0	53	17.1
54	15.8	55	15.8	56	17.7
57	19.8	58	21.6	59	23.2
60	24.2	61	24.6	62	24.9
63	25.0	64	24.6	65	24.5
66	24.7	67	24.8	68	24.7

EPA URBAN DYNAMOMETER—Continued
DRIVING SCHEDULE
[Speed versus Time Sequence]

Time (sec.)	Speed (m.p.h.)	Time (sec.)	Speed (m.p.h.)	Time (sec.)	Speed (m.p.h.)
69	24.6	70	24.6	71	25.1
72	25.6	73	25.7	74	25.4
75	24.9	76	25.0	77	25.4
78	26.0	79	26.0	80	25.7
81	26.1	82	26.7	83	27.5
84	28.6	85	29.3	86	29.8
87	30.1	88	30.4	89	30.7
90	30.7	91	30.5	92	30.4
93	30.3	94	30.4	95	30.8
96	30.4	97	29.9	98	29.5
99	29.8	100	30.3	101	30.7
102	30.9	103	31.0	104	30.9
105	30.4	106	29.8	107	29.9
108	30.2	109	30.7	110	31.2
111	31.8	112	32.2	113	32.4
114	32.2	115	31.7	116	28.6
117	25.3	118	22.0	119	18.7
120	15.4	121	12.1	122	8.8
123	5.5	124	2.2	125	0.0
126	0.0	127	0.0	128	0.0
129	0.0	130	0.0	131	0.0
132	0.0	133	0.0	134	0.0
135	0.0	136	0.0	137	0.0
138	0.0	139	0.0	140	0.0
141	0.0	142	0.0	143	0.0
144	0.0	145	0.0	146	0.0
147	0.0	148	0.0	149	0.0
150	0.0	151	0.0	152	0.0
153	0.0	154	0.0	155	0.0
156	0.0	157	0.0	158	0.0
159	0.0	160	0.0	161	0.0
162	0.0	163	0.0	164	3.3
165	6.6	166	9.9	167	13.2
168	16.5	169	19.8	170	22.2
171	24.3	172	25.8	173	26.4
174	25.7	175	25.1	176	24.7
177	25.0	178	25.2	179	25.4
180	25.8	181	27.2	182	26.5
183	24.0	184	22.7	185	19.4
186	17.7	187	17.2	188	18.1
189	18.6	190	20.0	191	22.2
192	24.5	193	27.3	194	30.5
195	33.5	196	36.2	197	37.3
198	39.3	199	40.5	200	42.1
201	43.5	202	45.1	203	46.0
204	46.8	205	47.5	206	47.5
207	47.3	208	47.2	209	47.0
210	47.0	211	47.0	212	47.0
213	47.0	214	47.2	215	47.4
216	47.9	217	48.5	218	49.1
219	49.5	220	50.0	221	50.6
222	51.0	223	51.5	224	52.2
225	53.2	226	54.1	227	54.6
228	54.9	229	55.0	230	54.9
231	54.6	232	54.6	233	54.8
234	55.1	235	55.5	236	55.7
237	56.1	238	56.3	239	56.6
240	56.7	241	56.7	242	56.5
243	56.5	244	56.5	245	56.5
246	56.5	247	56.5	248	56.4
249	56.1	250	55.8	251	55.1
252	54.6	253	54.2	254	54.0
255	53.7	256	53.6	257	53.9
258	54.0	259	54.1	260	54.1
261	53.8	262	53.4	263	53.0
264	52.6	265	52.1	266	52.4
267	52.0	268	51.9	269	51.7
270	51.5	271	51.6	272	51.8
273	52.1	274	52.5	275	53.0

EPA URBAN DYNAMOMETER—Continued
DRIVING SCHEDULE
[Speed versus Time Sequence]

Time (sec.)	Speed (m.p.h.)	Time (sec.)	Speed (m.p.h.)	Time (sec.)	Speed (m.p.h.)
276	53.5	277	54.0	278	54.9
279	55.4	280	55.6	281	56.0
282	56.0	283	55.8	284	55.2
285	54.5	286	53.6	287	52.5
288	51.5	289	51.5	290	51.5
291	51.1	292	50.1	293	50.0
294	50.1	295	50.0	296	49.6
297	49.5	298	49.5	299	49.5
300	49.1	301	48.6	302	48.1
303	47.2	304	46.1	305	45.0
306	43.8	307	42.6	308	41.5
309	40.3	310	38.5	311	37.0
312	35.2	313	33.8	314	32.5
315	31.5	316	30.6	317	30.5
318	30.0	319	29.0	320	27.5
321	24.8	322	21.5	323	20.1
324	19.1	325	18.5	326	17.0
327	15.5	328	12.5	329	10.8
330	8.0	331	4.7	332	1.4
333	0.0	334	0.0	335	0.0
336	0.0	337	0.0	338	0.0
339	0.0	340	0.0	341	0.0
342	0.0	343	0.0	344	0.0
345	0.0	346	0.0	347	1.0
348	4.3	349	7.6	350	10.9
351	14.2	352	17.3	353	20.0
354	22.5	355	23.7	356	25.2
357	26.6	358	28.1	359	30.0
360	30.8	361	31.6	362	32.1
363	32.8	364	33.6	365	34.5
366	34.6	367	34.9	368	34.8
369	34.5	370	34.7	371	35.5
372	36.0	373	36.0	374	36.0
375	36.0	376	36.0	377	36.0
378	36.1	379	36.4	380	36.5
381	36.4	382	36.0	383	35.1
384	34.1	385	33.5	386	31.4
387	29.0	388	25.7	389	23.0
390	20.3	391	17.5	392	14.5
393	12.0	394	8.7	395	5.4
396	2.1	397	0.0	398	0.0
399	0.0	400	0.0	401	0.0
402	0.0	403	2.6	404	5.9
405	9.2	406	12.5	407	15.8
408	19.1	409	22.4	410	25.0
411	25.6	412	27.5	413	29.0
414	30.0	415	30.1	416	30.0
417	29.7	418	29.3	419	28.8
420	28.0	421	25.0	422	21.7
423	18.4	424	15.1	425	11.8
426	8.5	427	5.2	428	1.9
429	0.0	430	0.0	431	0.0
432	0.0	433	0.0	434	0.0
435	0.0	436	0.0	437	0.0
438	0.0	439	0.0	440	0.0
441	0.0	442	0.0	443	0.0
444	0.0	445	0.0	446	0.0
447	0.0	448	3.3	449	6.6
450	9.9	451	13.2	452	16.5
453	19.8	454	23.1	455	26.4
456	27.8	457	29.1	458	31.5
459	33.0	460	33.6	461	34.8
462	35.1	463	35.6	464	36.1
465	36.0	466	36.1	467	36.2
468	36.0	469	35.7	470	36.0
471	36.0	472	35.6	473	35.5
474	35.4	475	35.2	476	35.2
477	35.2	478	35.2	479	35.2
480	35.2	481	35.0	482	35.1

EPA URBAN DYNAMOMETER—Continued
DRIVING SCHEDULE
[Speed versus Time Sequence]

Time (sec.)	Speed (m.p.h.)	Time (sec.)	Speed (m.p.h.)	Time (sec.)	Speed (m.p.h.)
483	35.2	484	35.5	485	35.2
486	35.0	487	35.0	488	35.0
489	34.8	490	34.6	491	34.5
492	33.5	493	32.0	494	30.1
495	28.0	496	25.5	497	22.5
498	19.8	499	16.5	500	13.2
501	10.3	502	7.2	503	4.0
504	1.0	505	0.0	506	0.0
507	0.0	508	0.0	509	0.0
510	0.0	511	1.2	512	3.5
513	5.5	514	6.5	515	8.5
516	9.6	517	10.5	518	11.9
519	14.0	520	16.0	521	17.7
522	19.0	523	20.1	524	21.0
525	22.0	526	23.0	527	23.8
528	24.5	529	24.9	530	25.0
531	25.0	532	25.0	533	25.0
534	25.0	535	25.0	536	25.6
537	25.8	538	26.0	539	25.6
540	25.2	541	25.0	542	25.0
543	25.0	544	24.4	545	23.1
546	19.8	547	16.5	548	13.2
549	9.9	550	6.6	551	3.3
552	0.0	553	0.0	554	0.0
555	0.0	556	0.0	557	0.0
558	0.0	559	0.0	560	0.0
561	0.0	562	0.0	563	0.0
564	0.0	565	0.0	566	0.0
567	0.0	568	0.0	569	3.3
570	6.6	571	9.9	572	13.0
573	14.6	574	16.0	575	17.0
576	17.0	577	17.0	578	17.5
579	17.7	580	17.7	581	17.5
582	17.0	583	16.9	584	16.6
585	17.0	586	17.1	587	17.0
588	16.6	589	16.5	590	16.5
591	16.6	592	17.0	593	17.6
594	18.5	595	19.2	596	20.2
597	21.0	598	21.1	599	21.2
600	21.6	601	22.0	602	22.4
603	22.5	604	22.5	605	22.5
606	22.7	607	23.7	608	25.1
609	26.0	610	26.5	611	27.0
612	26.1	613	22.8	614	19.5
615	16.2	616	12.9	617	9.6
618	6.3	619	3.0	620	0.0
621	0.0	622	0.0	623	0.0
624	0.0	625	0.0	626	0.0
627	0.0	628	0.0	629	0.0
630	0.0	631	0.0	632	0.0
633	0.0	634	0.0	635	0.0
636	0.0	637	0.0	638	0.0
639	0.0	640	0.0	641	0.0
642	0.0	643	0.0	644	0.0
645	0.0	646	2.0	647	4.5
648	7.8	649	10.2	650	12.5
651	14.0	652	15.3	653	17.5
654	19.6	655	21.0	656	22.2
657	23.3	658	24.5	659	25.3
660	25.6	661	26.0	662	26.1
663	26.2	664	26.2	665	26.4
666	26.5	667	26.5	668	26.0
669	25.5	670	23.6	671	21.4
672	18.5	673	16.4	674	14.5
675	11.6	676	8.7	677	5.8
678	3.5	679	2.0	680	0.0
681	0.0	682	0.0	683	0.0
684	0.0	685	0.0	686	0.0
687	0.0	688	0.0	689	0.0

EPA URBAN DYNAMOMETER—Continued
DRIVING SCHEDULE
[Speed versus Time Sequence]

Time (sec.)	Speed (m.p.h.)	Time (sec.)	Speed (m.p.h.)	Time (sec.)	Speed (m.p.h.)
690	0.0	691	0.0	692	0.0
693	0.0	694	1.4	695	3.3
696	4.4	697	6.5	698	9.2
699	11.3	700	13.5	701	14.6
702	16.4	703	16.7	704	16.5
705	16.5	706	18.2	707	19.2
708	20.1	709	21.5	710	22.5
711	22.5	712	22.1	713	22.7
714	23.3	715	23.5	716	22.5
717	21.6	718	20.5	719	18.0
720	15.0	721	12.0	722	9.0
723	6.2	724	4.5	725	3.0
726	2.1	727	0.5	728	0.5
729	3.2	730	6.5	731	9.6
732	12.5	733	14.0	734	16.0
735	18.0	736	19.6	737	21.5
738	23.1	739	24.5	740	25.5
741	26.5	742	27.1	743	27.6
744	27.9	745	28.3	746	28.6
747	28.6	748	28.3	749	28.2
750	28.0	751	27.5	752	26.8
753	25.5	754	23.5	755	21.5
756	19.0	757	16.5	758	14.9
759	12.5	760	9.4	761	6.2
762	3.0	763	1.5	764	1.5
765	0.5	766	0.0	767	3.0
768	6.3	769	9.6	770	12.9
771	15.8	772	17.5	773	18.4
774	19.5	775	20.7	776	22.0
777	23.2	778	25.0	779	26.5
780	27.5	781	28.0	782	28.3
783	28.9	784	28.9	785	28.9
786	28.8	787	28.5	788	28.3
789	28.3	790	28.3	791	28.2
792	27.6	793	27.5	794	27.5
795	27.5	796	27.5	797	27.5
798	27.5	799	27.6	800	28.0
801	28.5	802	30.0	803	31.0
804	32.0	805	33.0	806	33.0
807	33.6	808	34.0	809	34.3
810	34.2	811	34.0	812	34.0
813	33.9	814	33.6	815	33.1
816	33.0	817	32.5	818	32.0
819	31.9	820	31.6	821	31.5
822	30.6	823	30.0	824	29.9
825	29.9	826	29.9	827	29.9
828	29.6	829	29.5	830	29.5
831	29.3	832	28.9	833	28.2
834	27.7	835	27.0	836	25.5
837	23.7	838	22.0	839	20.5
840	19.2	841	19.2	842	20.1
843	20.9	844	21.4	845	22.0
846	22.6	847	23.2	848	24.0
849	25.0	850	26.0	851	26.6
852	26.6	853	26.8	854	27.0
855	27.2	856	27.8	857	28.1
858	28.8	859	28.9	860	29.0
861	29.1	862	29.0	863	28.1
864	27.5	865	27.0	866	25.8
867	25.0	868	24.5	869	24.8
870	25.1	871	25.5	872	25.7
873	26.2	874	26.9	875	27.5
876	27.8	877	28.4	878	29.0
879	29.2	880	29.1	881	29.0
882	28.9	883	28.5	884	28.1
885	28.0	886	28.0	887	27.6
888	27.2	889	26.6	890	27.0
891	27.5	892	27.8	893	28.0
894	27.8	895	28.0	896	28.0

EPA URBAN DYNAMOMETER—Continued
DRIVING SCHEDULE
[Speed versus Time Sequence]

Time (sec.)	Speed (m.p.h.)	Time (sec.)	Speed (m.p.h.)	Time (sec.)	Speed (m.p.h.)
897	28.0	898	27.7	899	27.4
900	26.9	901	26.6	902	26.5
903	26.5	904	26.5	905	26.3
906	26.2	907	26.2	908	25.9
909	25.6	910	25.6	911	25.9
912	25.8	913	25.5	914	24.6
915	23.5	916	22.2	917	21.6
918	21.6	919	21.7	920	22.6
921	23.4	922	24.0	923	24.2
924	24.4	925	24.9	926	25.1
927	25.2	928	25.3	929	25.5
930	25.2	931	25.0	932	25.0
933	25.0	934	24.7	935	24.5
936	24.3	937	24.3	938	24.5
939	25.0	940	25.0	941	24.6
942	24.6	943	24.1	944	24.5
945	25.1	946	25.6	947	25.1
948	24.0	949	22.0	950	20.1
951	16.9	952	13.6	953	10.3
954	7.0	955	3.7	956	0.4
957	0.0	958	0.0	959	0.0
960	2.0	961	5.3	962	8.6
963	11.9	964	15.2	965	17.5
966	18.6	967	20.0	968	21.1
969	22.0	970	23.0	971	24.5
972	26.3	973	27.5	974	28.1
975	28.4	976	28.5	977	28.5
978	28.5	979	27.7	980	27.5
981	27.2	982	26.8	983	26.5
984	26.0	985	25.7	986	25.2
987	24.0	988	22.0	989	21.5
990	21.5	991	21.8	992	22.5
993	23.0	994	22.8	995	22.8
996	23.0	997	22.7	998	22.7
999	22.7	1000	23.5	1001	24.0
1002	24.6	1003	24.8	1004	25.1
1005	25.5	1006	25.6	1007	25.5
1008	25.0	1009	24.1	1010	23.7
1011	23.2	1012	22.9	1013	22.5
1014	22.0	1015	21.6	1016	20.5
1017	17.5	1018	14.2	1019	10.9
1020	7.6	1021	4.3	1022	1.0
1023	0.0	1024	0.0	1025	0.0
1026	0.0	1027	0.0	1028	0.0
1029	0.0	1030	0.0	1031	0.0
1032	0.0	1033	0.0	1034	0.0
1035	0.0	1036	0.0	1037	0.0
1038	0.0	1039	0.0	1040	0.0
1041	0.0	1042	0.0	1043	0.0
1044	0.0	1045	0.0	1046	0.0
1047	0.0	1048	0.0	1049	0.0
1050	0.0	1051	0.0	1052	0.0
1053	1.2	1054	4.0	1055	7.3
1056	10.6	1057	13.9	1058	17.0
1059	18.5	1060	20.0	1061	21.8
1062	23.0	1063	24.0	1064	24.8
1065	25.6	1066	26.5	1067	26.8
1068	27.4	1069	27.9	1070	28.3
1071	28.0	1072	27.5	1073	27.0
1074	27.0	1075	26.3	1076	24.5
1077	22.5	1078	21.5	1079	20.6
1080	18.0	1081	15.0	1082	12.3
1083	11.1	1084	10.6	1085	10.0
1086	9.5	1087	9.1	1088	8.7
1089	8.6	1090	8.8	1091	9.0
1092	8.7	1093	8.6	1094	8.0
1095	7.0	1096	5.0	1097	4.2
1098	2.6	1099	1.0	1100	0.0
1101	0.1	1102	0.6	1103	1.6

EPA URBAN DYNAMOMETER—Continued
DRIVING SCHEDULE
[Speed versus Time Sequence]

Time (sec.)	Speed (m.p.h.)	Time (sec.)	Speed (m.p.h.)	Time (sec.)	Speed (m.p.h.)
1104	3.6	1105	6.9	1106	10.0
1107	12.8	1108	14.0	1109	14.5
1110	16.0	1111	18.1	1112	20.0
1113	21.0	1114	21.2	1115	21.3
1116	21.4	1117	21.7	1118	22.5
1119	23.0	1120	23.8	1121	24.5
1122	25.0	1123	24.9	1124	24.8
1125	25.0	1126	25.4	1127	25.8
1128	26.0	1129	26.4	1130	26.6
1131	26.9	1132	27.0	1133	27.0
1134	27.0	1135	26.9	1136	26.8
1137	26.8	1138	26.5	1139	26.4
1140	26.0	1141	25.5	1142	24.6
1143	23.5	1144	21.5	1145	20.0
1146	17.5	1147	16.0	1148	14.0
1149	10.7	1150	7.4	1151	4.1
1152	0.8	1153	0.0	1154	0.0
1155	0.0	1156	0.0	1157	0.0
1158	0.0	1159	0.0	1160	0.0
1161	0.0	1162	0.0	1163	0.0
1164	0.0	1165	0.0	1166	0.0
1167	0.0	1168	0.0	1169	2.1
1170	5.4	1171	8.7	1172	12.0
1173	15.3	1174	18.6	1175	21.1
1176	23.0	1177	23.5	1178	23.0
1179	22.5	1180	20.0	1181	16.7
1182	13.4	1183	10.1	1184	6.8
1185	3.5	1186	0.2	1187	0.0
1188	0.0	1189	0.0	1190	0.0
1191	0.0	1192	0.0	1193	0.0
1194	0.0	1195	0.0	1196	0.0
1197	0.2	1198	1.5	1199	3.5
1200	6.5	1201	9.8	1202	12.0
1203	12.9	1204	13.0	1205	12.6
1206	12.8	1207	13.1	1208	13.1
1209	14.0	1210	15.5	1211	17.0
1212	18.6	1213	19.7	1214	21.0
1215	21.5	1216	21.8	1217	21.8
1318	21.5	1219	21.2	1220	21.5
1221	21.8	1222	22.0	1223	21.9
1224	21.7	1225	21.5	1226	21.5
1227	21.4	1228	20.1	1229	19.5
1230	19.2	1231	19.6	1232	19.8
1233	20.0	1234	19.5	1235	17.5
1236	15.5	1237	13.0	1238	10.0
1239	8.0	1240	6.0	1241	4.0
1242	2.5	1243	0.7	1244	0.0
1245	0.0	1246	0.0	1247	0.0
1248	0.0	1249	0.0	1250	0.0
1251	0.0	1252	1.0	1253	1.0
1254	1.0	1255	1.0	1256	1.0
1257	1.6	1258	3.0	1259	4.0
1260	5.0	1261	6.3	1262	8.0
1263	10.0	1264	10.5	1265	9.5
1266	8.5	1267	7.6	1268	8.8
1269	11.0	1270	14.0	1271	17.0
1272	19.5	1273	21.0	1274	21.8
1275	22.2	1276	23.0	1277	23.6
1278	24.1	1279	24.5	1280	24.5
1281	24.0	1282	23.5	1283	23.5
1284	23.5	1285	23.5	1286	23.5
1287	23.5	1288	24.0	1289	24.1
1290	24.5	1291	24.7	1292	25.0
1293	25.4	1294	25.6	1295	25.7
1296	26.0	1297	26.2	1298	27.0
1299	27.8	1300	28.3	1301	29.0
1302	29.1	1303	29.0	1304	28.0
1305	24.7	1306	21.4	1307	18.1
1308	14.8	1309	11.5	1310	8.2

EPA URBAN DYNAMOMETER—Continued DRIVING SCHEDULE

[Speed versus Time Sequence]

Time (sec.)	Speed (m.p.h.)	Time (sec.)	Speed (m.p.h.)	Time (sec.)	Speed (m.p.h.)
1311	4.9	1312	1.6	1313	0.0
1314	0.0	1315	0.0	1316	0.0
1317	0.0	1318	0.0	1319	0.0
1320	0.0	1321	0.0	1322	0.0
1323	0.0	1324	0.0	1325	0.0
1326	0.0	1327	0.0	1328	0.0
1329	0.0	1330	0.0	1331	0.0
1332	0.0	1333	0.0	1334	0.0
1335	0.0	1336	0.0	1337	0.0
1338	1.5	1339	4.8	1340	8.1
1341	11.4	1342	13.2	1343	15.1
1344	16.8	1345	18.3	1346	19.5
1347	20.3	1348	21.3	1349	21.9
1350	22.1	1351	22.4	1352	22.0
1353	21.6	1354	21.1	1355	20.5
1356	20.0	1357	19.6	1358	18.5
1359	17.5	1360	16.5	1361	15.5
1362	14.0	1363	11.0	1364	8.0
1365	5.2	1366	2.5	1367	0.0
1368	0.0	1369	0.0	1370	0.0
1371	0.0	1372	0.0	.....	.....

The diagrams below show the range of acceptable speed tolerances for typical points. The curve on the left is typical of portions of the speed curve which are increasing or decreasing throughout the 2 second time interval. The curve on the right is typical of portions of the speed curve which include a maximum or minimum value.

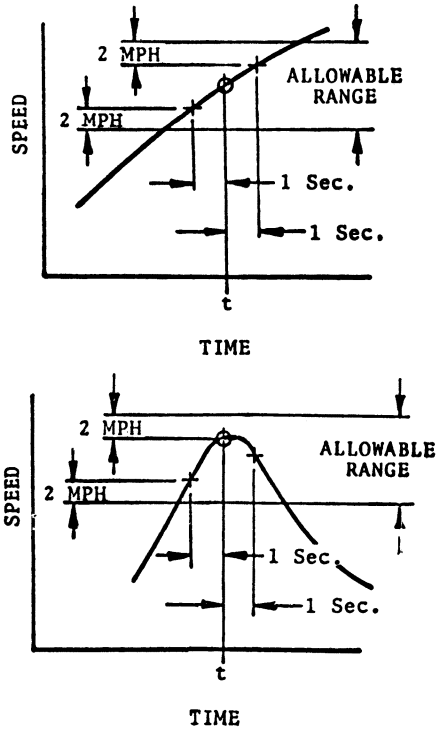

(b) *EPA driving schedule for motorcycles with engine displacement below 170 cc.* Use the driving schedule specified in paragraph (a)(2) of this appendix, except that the schedule specified in this paragraph (b) applies for the portion of the driving schedule from 164 to 332 seconds.

SPEED VERSUS TIME SEQUENCE

Time (sec.)	Speed (kph)
164	3.4
165	6.8
166	10.3
167	13.7
168	17.1
169	20.5
170	23.0
171	25.2
172	26.7
173	27.4
174	26.6
175	26.0
176	25.6
177	25.9
178	26.1
179	26.3
180	26.7
181	28.2
182	27.5
183	24.9
184	23.5
185	20.1

SPEED VERSUS TIME SEQUENCE—Continued

Time (sec.)	Speed (kph)
186	18.3
187	17.8
188	18.8
189	19.3
190	20.7
191	23.0
192	25.4
193	28.3
194	31.6
195	34.7
196	37.5
197	38.6
198	40.7
199	42.0
200	43.6
201	45.1
202	46.7
203	47.7
204	48.5
205	49.2
206	49.2
207	49.0
208	48.9
209	48.7
210	48.7
211	48.7
212	48.7
213	48.7
214	48.9
215	49.1
216	49.6
217	50.2
218	50.9
219	51.3
220	51.8
221	52.4
222	52.8
223	53.4
224	54.1
225	55.1
226	56.0
227	56.6
228	56.9
229	57.0
230	56.9
231	56.6
232	56.6
233	56.8
234	57.1
235	57.5
236	57.7
237	58.1
238	58.3
239	58.6
240	58.7
241	58.7
242	58.5
243	58.5
244	58.5
245	58.5
246	58.5
247	58.5
248	58.4
249	58.1
250	57.8
251	57.1
252	56.6
253	56.2
254	55.9
255	55.6
256	55.5

SPEED VERSUS TIME SEQUENCE—Continued

Time (sec.)	Speed (kph)
257	55.8
258	55.9
259	56.0
260	56.0
261	55.7
262	55.3
263	54.9
264	54.5
265	54.0
266	54.3
267	53.9
268	53.8
269	53.6
270	53.4
271	53.5
272	53.7
273	54.0
274	54.4
275	54.9
276	55.4
277	55.9
278	56.9
279	57.4
280	57.6
281	58.0
282	58.0
283	57.8
284	57.2
285	56.5
286	55.5
287	54.4
288	53.4
289	53.4
290	53.4
291	52.9
292	51.9
293	51.8
294	51.9
295	51.8
296	51.4
297	51.3
298	51.3
299	51.3
300	50.9
301	50.3
302	49.8
303	48.9
304	47.8
305	46.6
306	45.4
307	44.1
308	43.0
309	41.8
310	39.9
311	38.3
312	36.5
313	35.0
314	33.7
315	32.6
316	31.7
317	31.6
318	31.1
319	30.0
320	28.5
321	25.7
322	22.3
323	20.8
324	19.8
325	19.2
326	17.6
327	16.1

SPEED VERSUS TIME SEQUENCE—Continued

Time (sec.)	Speed (kph)
328	12.9
329	11.2
330	8.3
331	4.9
332	1.5

(c) *EPA driving schedule for class 3 heavy-duty vehicles.* This driving schedule is also known as the LA–92 cycle. The first 1,435 seconds are the Hot LA–92 driving schedule.

Time (sec.)	Speed (mph)
1	0.0
2	0.0
3	0.0
4	0.0
5	0.0
6	0.0
7	0.0
8	0.0
9	0.0
10	0.0
11	0.0
12	0.0
13	0.0
14	0.0
15	0.0
16	0.0
17	0.0
18	0.0
19	0.0
20	0.0
21	1.2
22	4.2
23	7.3
24	8.8
25	10.8
26	12.3
27	13.1
28	12.3
29	12.3
30	11.5
31	11.5
32	11.1
33	11.1
34	11.1
35	13.1
36	15.0
37	16.9
38	16.9
39	16.1
40	15.7
41	15.4
42	15.0
43	13.8
44	10.8
45	8.4
46	6.1
47	4.2
48	3.5
49	3.5
50	1.5
51	0.0
52	0.0
53	0.0
54	0.0
55	0.0
56	0.0
57	0.0
58	0.0
59	0.0
60	0.0
61	0.0
62	0.0
63	1.2
64	3.5
65	7.7
66	11.1
67	13.8
68	16.5
69	18.4
70	20.4
71	20.7
72	19.6
73	17.3
74	12.3
75	8.1
76	6.1
77	9.6
78	12.7
79	15.7
80	18.0
81	20.4
82	21.9
83	23.4
84	23.8
85	24.6
86	25.0
87	26.1
88	26.1
89	26.9
90	26.9
91	26.9
92	26.5
93	25.7
94	21.9
95	16.5
96	10.0
97	4.6
98	1.5
99	0.4
100	0.0
101	0.0
102	0.0
103	0.0
104	0.0
105	0.0
106	0.0
107	0.0
108	0.4
109	1.2
110	1.9
111	3.8
112	7.7
113	11.5
114	14.6
115	18.0
116	21.5
117	25.0
118	28.4
119	30.7
120	31.9
121	32.3
122	32.3
123	31.9
124	30.3
125	28.0
126	24.2
127	20.0
128	16.1
129	11.5
130	8.1

Time (sec.)	Speed (mph)
131	5.0
132	3.5
133	1.9
134	0.0
135	0.0
136	0.0
137	0.0
138	0.0
139	0.0
140	0.0
141	0.0
142	0.0
143	1.5
144	6.9
145	12.7
146	16.5
147	20.0
148	23.0
149	25.7
150	28.0
151	30.7
152	32.6
153	34.2
154	35.3
155	36.9
156	36.9
157	37.2
158	37.6
159	37.6
160	37.6
161	37.2
162	37.2
163	36.9
164	36.5
165	36.5
166	34.9
167	33.4
168	31.9
169	29.2
170	25.0
171	25.0
172	26.1
173	27.6
174	29.2
175	31.1
176	32.3
177	34.2
178	34.9
179	35.7
180	36.5
181	36.9
182	36.9
183	37.2
184	37.6
185	37.2
186	37.6
187	38.0
188	38.4
189	39.2
190	39.6
191	39.9
192	40.7
193	40.3
194	41.1
195	41.1
196	40.7
197	31.9
198	23.9
199	15.9
200	7.9
201	2.7
202	0.4
203	0.4
204	2.7
205	3.8
206	3.8
207	1.5
208	0.0
209	0.0
210	0.0
211	0.0
212	0.0
213	0.0
214	0.0
215	0.0
216	0.0
217	0.0
218	0.0
219	0.0
220	0.0
221	0.0
222	0.0
223	0.0
224	0.0
225	0.0
226	0.0
227	0.0
228	0.0
229	0.0
230	0.0
231	0.0
232	0.0
233	0.0
234	0.0
235	0.0
236	0.0
237	0.0
238	1.5
239	5.0
240	8.8
241	11.5
242	14.2
243	15.4
244	16.1
245	16.1
246	16.9
247	16.5
248	16.9
249	18.0
250	19.2
251	20.4
252	20.4
253	21.1
254	21.1
255	22.3
256	23.0
257	23.8
258	24.2
259	24.6
260	25.0
261	25.7
262	25.7
263	26.5
264	27.6
265	28.4
266	29.2
267	30.3
268	31.1
269	31.1
270	30.7
271	31.1
272	29.6
273	29.2
274	29.2
275	28.8
276	28.0

Time (sec.)	Speed (mph)
277	23.0
278	21.1
279	21.5
280	20.7
281	20.7
282	19.6
283	16.5
284	13.1
285	9.6
286	7.3
287	3.8
288	0.8
289	0.0
290	0.0
291	0.0
292	0.0
293	0.0
294	0.0
295	0.0
296	0.0
297	0.0
298	0.0
299	0.0
300	0.0
301	0.0
302	0.0
303	0.0
304	0.0
305	0.0
306	0.0
307	0.0
308	0.0
309	0.0
310	0.0
311	0.0
312	0.0
313	0.4
314	2.7
315	7.3
316	11.5
317	15.4
318	18.4
319	20.7
320	24.2
321	26.9
322	29.6
323	31.1
324	32.6
325	33.8
326	34.9
327	36.9
328	39.2
329	41.1
330	43.0
331	43.8
332	44.5
333	45.3
334	45.3
335	44.9
336	44.5
337	43.8
338	43.4
339	42.6
340	41.9
341	41.5
342	40.7
343	40.3
344	41.1
345	41.5
346	42.6
347	43.4
348	44.2
349	44.9
350	45.7
351	46.5
352	46.8
353	47.2
354	48.0
355	47.6
356	48.4
357	48.0
358	47.2
359	46.1
360	45.7
361	44.9
362	44.2
363	43.8
364	44.5
365	44.9
366	45.3
367	46.5
368	48.0
369	48.8
370	49.5
371	49.9
372	49.9
373	49.9
374	49.5
375	49.5
376	48.8
377	48.8
378	48.8
379	48.4
380	48.8
381	49.5
382	50.3
383	50.7
384	51.8
385	52.6
386	53.4
387	54.1
388	55.3
389	55.3
390	56.1
391	56.4
392	56.4
393	56.4
394	57.2
395	56.8
396	57.6
397	57.6
398	57.6
399	58.0
400	58.0
401	58.4
402	58.4
403	58.8
404	59.1
405	58.8
406	58.8
407	58.0
408	58.0
409	57.6
410	57.6
411	57.6
412	57.6
413	57.6
414	59.1
415	59.5
416	59.9
417	60.3
418	60.3
419	61.1
420	60.3
421	59.9
422	59.5

Time (sec.)	Speed (mph)
423	59.1
424	59.1
425	59.5
426	59.5
427	59.5
428	59.9
429	60.3
430	60.7
431	60.7
432	61.4
433	61.8
434	61.8
435	61.8
436	61.8
437	61.1
438	60.7
439	60.3
440	60.3
441	60.3
442	59.5
443	58.8
444	59.1
445	58.8
446	58.8
447	58.8
448	58.4
449	58.0
450	58.0
451	58.0
452	58.4
453	59.1
454	59.5
455	59.9
456	59.9
457	60.3
458	61.1
459	61.1
460	61.1
461	61.4
462	61.4
463	61.1
464	60.7
465	59.9
466	59.1
467	59.1
468	59.1
469	59.9
470	59.5
471	59.9
472	58.8
473	58.0
474	57.6
475	56.8
476	56.1
477	55.3
478	54.1
479	52.6
480	49.2
481	46.1
482	43.0
483	37.2
484	29.6
485	21.5
486	16.5
487	15.7
488	18.4
489	21.5
490	25.0
491	27.3
492	29.2
493	30.7
494	31.5
495	31.1
496	31.1
497	30.3
498	30.0
499	30.0
500	29.6
501	30.0
502	28.8
503	28.8
504	28.0
505	28.4
506	28.0
507	28.4
508	28.4
509	28.8
510	28.4
511	28.4
512	28.0
513	26.5
514	24.2
515	22.7
516	20.4
517	17.7
518	15.7
519	13.1
520	10.8
521	8.4
522	7.3
523	5.0
524	3.8
525	3.5
526	1.9
527	0.8
528	0.0
529	0.0
530	0.0
531	0.8
532	1.9
533	3.8
534	6.9
535	9.6
536	11.1
537	11.1
538	10.4
539	8.8
540	9.2
541	10.0
542	10.4
543	10.4
544	5.4
545	1.9
546	0.0
547	0.0
548	0.0
549	0.0
550	0.0
551	0.0
552	0.0
553	0.0
554	0.0
555	0.0
556	0.0
557	0.0
558	0.0
559	0.0
560	0.0
561	0.0
562	0.0
563	0.0
564	0.0
565	0.0
566	0.0
567	0.0
568	0.0

Time (sec.)	Speed (mph)
569	0.0
570	0.0
571	0.0
572	0.4
573	1.5
574	3.5
575	6.1
576	10.4
577	14.2
578	16.9
579	19.2
580	20.0
581	21.5
582	23.4
583	24.6
584	24.2
585	20.0
586	16.9
587	13.4
588	13.4
589	15.7
590	18.4
591	21.1
592	23.4
593	25.3
594	27.6
595	28.8
596	30.3
597	30.7
598	31.5
599	31.1
600	31.1
601	30.3
602	30.3
603	30.3
604	30.7
605	31.1
606	32.3
607	32.6
608	32.6
609	32.6
610	31.1
611	26.9
612	22.3
613	18.0
614	13.8
615	9.6
616	4.6
617	6.1
618	10.0
619	14.2
620	17.3
621	20.0
622	21.5
623	22.3
624	22.3
625	22.3
626	22.3
627	23.0
628	23.0
629	22.7
630	22.3
631	21.9
632	22.7
633	23.8
634	25.0
635	25.3
636	25.7
637	26.5
638	26.9
639	27.3
640	28.0
641	29.2
642	30.0
643	30.0
644	29.6
645	29.6
646	28.8
647	28.4
648	28.0
649	27.3
650	25.7
651	24.6
652	25.0
653	26.5
654	28.0
655	29.6
656	30.7
657	32.3
658	33.0
659	34.2
660	34.6
661	35.3
662	36.1
663	36.1
664	36.9
665	36.9
666	37.6
667	37.6
668	38.4
669	38.0
670	37.6
671	37.6
672	37.2
673	36.9
674	36.1
675	35.7
676	36.1
677	35.7
678	35.7
679	35.7
680	36.1
681	36.1
682	35.7
683	35.7
684	34.9
685	34.6
686	34.2
687	33.8
688	33.4
689	33.0
690	30.3
691	29.2
692	28.4
693	25.0
694	21.1
695	16.9
696	13.4
697	13.1
698	12.3
699	12.7
700	15.7
701	19.2
702	22.3
703	24.6
704	25.7
705	26.5
706	26.5
707	26.9
708	27.3
709	27.3
710	27.6
711	28.4
712	28.8
713	28.8
714	29.2

Time (sec.)	Speed (mph)
715	28.8
716	28.8
717	28.0
718	28.0
719	27.6
720	26.5
721	24.6
722	20.7
723	16.5
724	15.0
725	14.2
726	14.2
727	13.8
728	13.8
729	11.9
730	8.4
731	4.2
732	1.2
733	0.0
734	0.0
735	0.0
736	0.0
737	0.0
738	0.0
739	0.0
740	0.0
741	0.0
742	0.0
743	0.0
744	0.0
745	0.0
746	0.0
747	0.0
748	0.0
749	0.0
750	0.0
751	0.0
752	0.0
753	0.0
754	0.0
755	0.0
756	0.0
757	0.0
758	0.0
759	0.0
760	0.0
761	0.0
762	0.0
763	1.5
764	5.4
765	9.2
766	11.5
767	14.6
768	17.3
769	19.2
770	21.1
771	20.7
772	20.7
773	19.6
774	18.4
775	16.9
776	16.9
777	16.5
778	16.9
779	16.9
780	16.9
781	17.3
782	19.2
783	20.4
784	21.1
785	22.3
786	22.3
787	22.7
788	22.3
789	22.7
790	22.3
791	23.8
792	25.7
793	27.6
794	29.6
795	30.0
796	29.2
797	27.6
798	25.0
799	23.8
800	23.4
801	24.2
802	23.4
803	23.0
804	20.4
805	18.8
806	17.3
807	15.0
808	13.1
809	9.2
810	6.9
811	4.6
812	4.6
813	4.6
814	4.2
815	5.4
816	4.6
817	3.5
818	2.3
819	2.3
820	1.9
821	3.1
822	6.1
823	4.6
824	2.7
825	2.3
826	2.3
827	3.1
828	4.2
829	3.5
830	3.8
831	4.2
832	3.5
833	3.5
834	3.5
835	4.6
836	5.8
837	3.5
838	0.8
839	3.5
840	3.8
841	2.3
842	0.0
843	1.2
844	6.9
845	13.8
846	18.8
847	23.8
848	27.3
849	30.7
850	33.8
851	37.6
852	40.7
853	43.8
854	46.1
855	48.0
856	49.5
857	51.5
858	53.0
859	54.5
860	55.7

Time (sec.)	Speed (mph)
861	56.8
862	58.0
863	59.1
864	60.3
865	61.1
866	61.8
867	61.8
868	61.8
869	61.8
870	62.6
871	63.4
872	63.0
873	63.0
874	62.6
875	61.8
876	61.8
877	62.2
878	62.2
879	62.6
880	63.7
881	64.5
882	64.9
883	66.0
884	66.0
885	66.8
886	66.4
887	66.8
888	67.2
889	66.4
890	66.4
891	66.0
892	65.7
893	65.7
894	66.4
895	66.0
896	65.7
897	65.3
898	65.3
899	64.5
900	64.5
901	64.1
902	63.7
903	63.7
904	63.7
905	64.5
906	64.5
907	64.9
908	64.5
909	64.1
910	64.9
911	65.3
912	65.3
913	65.3
914	64.1
915	63.4
916	63.0
917	63.4
918	64.1
919	64.9
920	65.3
921	64.5
922	64.1
923	63.4
924	63.7
925	63.4
926	63.4
927	63.4
928	63.4
929	63.7
930	64.5
931	65.3
932	64.9
933	63.7
934	63.0
935	59.9
936	55.3
937	50.7
938	49.2
939	48.0
940	46.1
941	44.2
942	41.1
943	39.9
944	36.1
945	32.6
946	29.2
947	24.6
948	20.7
949	19.2
950	16.5
951	15.0
952	11.9
953	9.6
954	8.4
955	5.8
956	1.2
957	0.0
958	0.0
959	0.0
960	1.2
961	3.1
962	5.0
963	8.4
964	11.5
965	14.6
966	16.9
967	18.8
968	21.1
969	23.8
970	26.5
971	28.0
972	29.6
973	30.7
974	32.6
975	34.2
976	35.3
977	36.1
978	36.9
979	38.0
980	38.0
981	38.0
982	38.0
983	38.0
984	37.2
985	36.9
986	36.1
987	35.7
988	34.9
989	34.9
990	33.8
991	31.5
992	28.8
993	25.7
994	24.6
995	23.4
996	22.3
997	21.5
998	20.0
999	20.0
1000	19.2
1001	19.2
1002	18.0
1003	11.9
1004	6.9
1005	2.7
1006	0.8

Time (sec.)	Speed (mph)
1007	0.4
1008	0.0
1009	0.0
1010	0.0
1011	0.0
1012	0.0
1013	0.0
1014	0.0
1015	0.0
1016	0.0
1017	0.0
1018	0.0
1019	0.0
1020	0.0
1021	0.0
1022	0.0
1023	0.4
1024	2.7
1025	6.1
1026	9.2
1027	11.5
1028	14.2
1029	16.1
1030	18.0
1031	20.0
1032	21.5
1033	23.0
1034	24.2
1035	25.0
1036	25.7
1037	26.9
1038	27.6
1039	27.6
1040	28.4
1041	29.2
1042	29.2
1043	30.0
1044	29.6
1045	29.6
1046	28.8
1047	28.0
1048	23.8
1049	18.8
1050	11.9
1051	6.1
1052	1.5
1053	1.5
1054	4.2
1055	8.1
1056	10.4
1057	13.1
1058	15.4
1059	18.0
1060	20.4
1061	23.0
1062	25.3
1063	27.3
1064	28.8
1065	30.3
1066	31.1
1067	32.3
1068	31.9
1069	32.3
1070	31.9
1071	31.1
1072	28.8
1073	25.0
1074	22.7
1075	18.8
1076	15.4
1077	13.4
1078	11.9
1079	8.8
1080	5.0
1081	1.9
1082	2.3
1083	2.7
1084	3.5
1085	6.5
1086	10.8
1087	13.8
1088	16.1
1089	18.4
1090	20.4
1091	21.9
1092	21.9
1093	20.7
1094	17.3
1095	13.1
1096	9.6
1097	8.8
1098	10.8
1099	12.7
1100	14.2
1101	14.6
1102	13.1
1103	11.1
1104	11.1
1105	11.1
1106	13.1
1107	15.7
1108	18.4
1109	20.7
1110	23.8
1111	25.7
1112	28.0
1113	30.0
1114	31.1
1115	32.3
1116	34.2
1117	35.7
1118	36.9
1119	38.8
1120	40.3
1121	41.5
1122	42.2
1123	43.0
1124	43.8
1125	43.8
1126	43.4
1127	43.0
1128	42.2
1129	41.9
1130	41.5
1131	41.9
1132	41.9
1133	41.9
1134	42.2
1135	42.6
1136	42.6
1137	42.6
1138	42.6
1139	42.6
1140	42.6
1141	42.6
1142	42.2
1143	43.0
1144	43.4
1145	43.0
1146	42.6
1147	41.9
1148	40.7
1149	36.9
1150	32.6
1151	28.0
1152	23.4

Time (sec.)	Speed (mph)
1153	18.4
1154	14.6
1155	12.3
1156	9.2
1157	5.8
1158	1.9
1159	0.4
1160	0.0
1161	0.0
1162	0.0
1163	0.0
1164	0.0
1165	0.4
1166	4.2
1167	9.2
1168	11.9
1169	14.2
1170	15.7
1171	15.0
1172	14.2
1173	13.4
1174	13.8
1175	14.6
1176	14.6
1177	14.2
1178	16.1
1179	15.7
1180	15.7
1181	14.6
1182	13.1
1183	10.0
1184	7.3
1185	3.5
1186	0.8
1187	0.0
1188	0.0
1189	0.0
1190	0.0
1191	0.4
1192	2.7
1193	7.3
1194	11.5
1195	15.4
1196	19.2
1197	21.9
1198	23.8
1199	25.0
1200	26.1
1201	27.3
1202	28.8
1203	30.0
1204	29.6
1205	29.6
1206	28.8
1207	26.1
1208	22.3
1209	19.2
1210	16.5
1211	12.7
1212	9.6
1213	6.9
1214	4.2
1215	2.3
1216	0.8
1217	0.0
1218	0.0
1219	0.0
1220	0.0
1221	0.0
1222	0.0
1223	0.0
1224	0.0
1225	0.0
1226	0.0
1227	0.0
1228	0.0
1229	0.0
1230	0.0
1231	0.0
1232	0.0
1233	0.0
1234	0.0
1235	0.0
1236	0.0
1237	0.0
1238	0.0
1239	0.0
1240	3.5
1241	10.4
1242	15.4
1243	17.3
1244	17.3
1245	18.4
1246	21.5
1247	24.6
1248	27.3
1249	30.0
1250	31.5
1251	31.9
1252	32.6
1253	33.4
1254	34.9
1255	36.5
1256	37.6
1257	39.2
1258	40.3
1259	40.7
1260	41.1
1261	40.7
1262	40.7
1263	40.7
1264	41.5
1265	42.6
1266	43.0
1267	44.5
1268	45.3
1269	45.3
1270	44.9
1271	43.4
1272	40.3
1273	38.0
1274	36.1
1275	36.5
1276	38.0
1277	39.2
1278	40.7
1279	42.2
1280	43.4
1281	44.9
1282	45.7
1283	46.1
1284	46.8
1285	46.5
1286	46.5
1287	46.5
1288	46.1
1289	46.1
1290	46.1
1291	46.8
1292	47.6
1293	48.0
1294	48.4
1295	48.0
1296	48.0
1297	47.2
1298	46.5

Time (sec.)	Speed (mph)
1299	46.8
1300	47.2
1301	48.4
1302	48.4
1303	48.8
1304	48.4
1305	47.6
1306	46.5
1307	44.2
1308	42.2
1309	41.5
1310	41.1
1311	40.7
1312	40.3
1313	39.6
1314	39.2
1315	38.8
1316	38.0
1317	37.6
1318	37.2
1319	36.5
1320	34.6
1321	31.5
1322	29.6
1323	29.2
1324	28.8
1325	28.8
1326	28.0
1327	28.0
1328	28.4
1329	29.6
1330	30.0
1331	30.3
1332	29.2
1333	26.5
1334	25.3
1335	25.0
1336	24.6
1337	24.6
1338	25.3
1339	26.1
1340	27.3
1341	28.4
1342	29.2
1343	29.2
1344	29.6
1345	30.0
1346	31.1
1347	32.6
1348	33.8
1349	34.6
1350	34.9
1351	34.6
1352	34.9
1353	34.6
1354	34.9
1355	34.9
1356	34.9
1357	34.2
1358	33.8
1359	32.6
1360	31.5
1361	30.0
1362	28.8
1363	27.3
1364	23.8
1365	23.0
1366	23.0
1367	22.3
1368	20.4
1369	18.8
1370	17.7
1371	16.1
1372	14.6
1373	12.7
1374	11.1
1375	9.2
1376	8.8
1377	7.3
1378	6.1
1379	5.0
1380	4.2
1381	3.5
1382	2.7
1383	2.3
1384	1.5
1385	1.2
1386	0.0
1387	1.2
1388	4.2
1389	7.3
1390	8.8
1391	10.8
1392	12.3
1393	13.1
1394	12.3
1395	12.3
1396	11.5
1397	11.5
1398	11.1
1399	11.1
1400	11.1
1401	13.1
1402	15.0
1403	16.9
1404	16.9
1405	16.1
1406	15.7
1407	15.4
1408	15.0
1409	13.8
1410	10.8
1411	8.4
1412	6.1
1413	4.2
1414	3.5
1415	3.5
1416	1.5
1417	0.0
1418	0.0
1419	0.0
1420	0.0
1421	0.0
1422	0.0
1423	0.0
1424	0.0
1425	0.0
1426	0.0
1427	0.0
1428	0.0
1429	0.0
1430	0.0
1431	0.0
1432	0.0
1433	0.0
1434	0.0
1435	0.0
1436	0.0
1437	0.0
1438	0.0
1439	0.0
1440	0.0
1441	0.0
1442	0.0
1443	0.0
1444	0.0

Time (sec.)	Speed (mph)
1445	0.0
1446	0.0
1447	0.0
1448	0.0
1449	0.0
1450	0.0
1451	0.0
1452	0.0
1453	0.0
1454	0.0
1455	0.0
1456	1.2
1457	4.2
1458	7.3
1459	8.8
1460	10.8
1461	12.3
1462	13.1
1463	12.3
1464	12.3
1465	11.5
1466	11.5
1467	11.1
1468	11.1
1469	11.1
1470	13.1
1471	15.0
1472	16.9
1473	16.9
1474	16.1
1475	15.7
1476	15.4
1477	15.0
1478	13.8
1479	10.8
1480	8.4
1481	6.1
1482	4.2
1483	3.5
1484	3.5
1485	1.5
1486	0.0
1487	0.0
1488	0.0
1489	0.0
1490	0.0
1491	0.0
1492	0.0
1493	0.0
1494	0.0
1495	0.0
1496	0.0
1497	0.0
1498	1.2
1499	3.5
1500	7.7
1501	11.1
1502	13.8
1503	16.5
1504	18.4
1505	20.4
1506	20.7
1507	19.6
1508	17.3
1509	12.3
1510	8.1
1511	6.1
1512	9.6
1513	12.7
1514	15.7
1515	18.0
1516	20.4
1517	21.9
1518	23.4
1519	23.8
1520	24.6
1521	25.0
1522	26.1
1523	26.1
1524	26.9
1525	26.9
1526	26.9
1527	26.5
1528	25.7
1529	21.9
1530	16.5
1531	10.0
1532	4.6
1533	1.5
1534	0.4
1535	0.0
1536	0.0
1537	0.0
1538	0.0
1539	0.0
1540	0.0
1541	0.0
1542	0.0
1543	0.4
1544	1.2
1545	1.9
1546	3.8
1547	7.7
1548	11.5
1549	14.6
1550	18.0
1551	21.5
1552	25.0
1553	28.4
1554	30.7
1555	31.9
1556	32.3
1557	32.3
1558	31.9
1559	30.3
1560	28.0
1561	24.2
1562	20.0
1563	16.1
1564	11.5
1565	8.1
1566	5.0
1567	3.5
1568	1.9
1569	0.0
1570	0.0
1571	0.0
1572	0.0
1573	0.0
1574	0.0
1575	0.0
1576	0.0
1577	0.0
1578	1.5
1579	6.9
1580	12.7
1581	16.5
1582	20.0
1583	23.0
1584	25.7
1585	28.0
1586	30.7
1587	32.6
1588	34.2
1589	35.3
1590	36.9

Time (sec.)	Speed (mph)
1591	36.9
1592	37.2
1593	37.6
1594	37.6
1595	37.6
1596	37.2
1597	37.2
1598	36.9
1599	36.5
1600	36.5
1601	34.9
1602	33.4
1603	31.9
1604	29.2
1605	25.0
1606	25.0
1607	26.1
1608	27.6
1609	29.2
1610	31.1
1611	32.3
1612	34.2
1613	34.9
1614	35.7
1615	36.5
1616	36.9
1617	36.9
1618	37.2
1619	37.6
1620	37.2
1621	37.6
1622	38.0
1623	38.4
1624	39.2
1625	39.6
1626	39.9
1627	40.7
1628	40.3
1629	41.1
1630	41.1
1631	40.7
1632	31.9
1633	23.9
1634	15.9
1635	7.9
1636	2.7
1637	0.4
1638	0.4
1639	2.7
1640	3.8
1641	3.8
1642	1.5
1643	0.0
1644	0.0
1645	0.0
1646	0.0
1647	0.0
1648	0.0
1649	0.0
1650	0.0
1651	0.0
1652	0.0
1653	0.0
1654	0.0
1655	0.0
1656	0.0
1657	0.0
1658	0.0
1659	0.0
1660	0.0
1661	0.0
1662	0.0
1663	0.0
1664	0.0
1665	0.0
1666	0.0
1667	0.0
1668	0.0
1669	0.0
1670	0.0
1671	0.0
1672	0.0
1673	1.5
1674	5.0
1675	8.8
1676	11.5
1677	14.2
1678	15.4
1679	16.1
1680	16.1
1681	16.9
1682	16.5
1683	16.9
1684	18.0
1685	19.2
1686	20.4
1687	20.4
1688	21.1
1689	21.1
1690	22.3
1691	23.0
1692	23.8
1693	24.2
1694	24.6
1695	25.0
1696	25.7
1697	25.7
1698	26.5
1699	27.6
1700	28.4
1701	29.2
1702	30.3
1703	31.1
1704	31.1
1705	30.7
1706	31.1
1707	29.6
1708	29.2
1709	29.2
1710	28.8
1711	28.0
1712	23.0
1713	21.1
1714	21.5
1715	20.7
1716	20.7
1717	19.6
1718	16.5
1719	13.1
1720	9.6
1721	7.3
1722	3.8
1723	0.8
1724	0.0
1725	0.0
1726	0.0
1727	0.0
1728	0.0
1729	0.0
1730	0.0
1731	0.0
1732	0.0
1733	0.0
1734	0.0
1735	0.0

(d) [Reserved]

(e) EPA New York City Cycle for Light-Duty Vehicles and Light-Duty Trucks.

EPA NEW YORK CITY CYCLE

[Speed versus time sequence]

Time (sec)	Speed (mph)	Time (sec)	Speed (mph)	Time (sec)	Speed (mph)
0	0	1	0	2	0
3	0	4	0	5	0
6	0	7	0	8	0
9	0	10	0	11	0
12	0	13	0	14	0
15	0	16	0	17	0
18	0	19	0	20	0
21	0	22	0	23	0
24	0	25	0	26	0
27	0	28	0	29	0
30	0	31	0	32	0
33	0	34	0	35	0
36	0	37	0	38	0
39	0	40	0	41	0
42	0	43	0	44	0
45	0	46	0	47	0.4
48	2.8	49	5.6	50	7.0
51	7.6	52	7.6	53	6.2
54	6.4	55	7.6	56	9.5
57	8.9	58	8.6	59	9.6
60	12.4	61	15.0	62	17.8
63	21.0	64	22.9	65	21.7
66	18.2	67	14.5	68	10.2
69	5.6	70	2.5	71	2.1
72	3.1	73	5.7	74	9.0
75	10.8	76	10.8	77	9.5
78	6.5	79	3.9	80	2.6
81	1.0	82	0.8	83	0.1
84	0	85	0	86	0
87	0	88	0	89	0
90	0	91	0	92	0
93	0	94	0	95	0
96	2.7	97	8.3	98	12.4
99	15.7	100	17.4	101	17.3
102	17.2	103	15.1	104	11.2
105	8.6	106	5.9	107	5.4
108	6.8	109	6.9	110	4.8
111	5.7	112	7.1	113	6.8
114	5.9	115	6.0	116	6.0
117	5.9	118	5.6	119	5.5
120	7.2	121	9.9	122	10.8
123	11.4	124	11.9	125	12.1
126	12.6	127	12.3	128	10.6
129	9.9	130	9.4	131	8.9
132	7.6	133	6.1	134	5.0
135	3.7	136	2.6	137	1.0
138	0.8	139	0.1	140	0.4
141	0.2	142	0	143	0
144	0	145	1.3	146	6.0
147	10.2	148	12.1	149	13.8
150	15.1	151	16.2	152	15.9
153	16.0	154	16.8	155	17.5
156	18.0	157	19.6	158	21.7
159	23.1	160	23.7	161	24.1
162	24.5	163	25.0	164	25.2
165	24.6	166	24.3	167	23.3
168	22.7	169	22.1	170	21.6
171	21.1	172	20.3	173	19.2
174	17.0	175	13.9	176	14.1
177	14.6	178	14.6	179	14.5
180	14.4	181	14.2	182	14.2
183	13.2	184	11.5	185	8.4
186	5.5	187	3.7	188	2.9
189	1.3	190	0.8	191	0.3
192	0.1	193	0.1	194	0
195	1.3	196	3.9	197	9.9
198	15.9	199	19.3	200	20.7
201	21.4	202	21.4	203	20.5

EPA NEW YORK CITY CYCLE—Continued

[Speed versus time sequence]

Time (sec)	Speed (mph)	Time (sec)	Speed (mph)	Time (sec)	Speed (mph)
204	19.0	205	16.7	206	13.1
207	11.2	208	14.9	209	19.8
210	23.8	211	25.7	212	26.2
213	26.4	214	23.3	215	19.6
216	18.9	217	19.3	218	19.4
219	18.5	220	17.5	221	16.4
222	15.6	223	15.6	224	16.0
225	16.8	226	17.5	227	18.0
228	19.6	229	21.7	230	23.5
231	24.6	232	25.0	233	24.3
234	23.1	235	20.7	236	17.2
237	13.5	238	9.2	239	3.3
240	0	241	0	242	0
243	0	244	0	245	0
246	0	247	0	248	0
249	0	250	0	251	0
252	0	253	0	254	0.2
255	2.0	256	4.5	257	6.4
258	7.2	259	7.6	260	7.2
261	6.6	262	6.5	263	5.1
264	4.4	265	5.5	266	3.0
267	3.4	268	3.0	269	2.9
270	1.3	271	0.8	272	0.3
273	0	274	0	275	0.3
276	4.7	277	9.7	278	13.9
279	16.7	280	19.1	281	20.5
282	20.5	283	19.7	284	19.9
285	20.4	286	20.9	287	21.4
288	21.9	289	22.4	290	22.1
291	21.4	292	20.8	293	20.3
294	20.5	295	19.3	296	17.3
297	17.1	298	16.7	299	14.3
300	11.9	301	10.7	302	10.2
303	9.4	304	10.6	305	12.8
306	13.7	307	12.3	308	10.4
309	8.6	310	5.5	311	3.2
312	2.0	313	0.6	314	0
315	0	316	0	317	0
318	0	319	0	320	0
321	0	322	0	323	2.5
324	6.1	325	5.5	326	3.2
327	3.6	328	6.1	329	9.1
330	9.8	331	8.6	332	6.8
333	5.9	334	5.6	335	6.0
336	7.2	337	8.4	338	9.3
339	7.6	340	5.5	341	2.5
342	0.1	343	0	344	0
345	0	346	0	347	0
348	0	349	0	350	0
351	0	352	0	353	0
354	0	355	0	356	0
357	0	358	0	359	0
360	0	361	0	362	0
363	0	364	0	365	0
366	0	367	0	368	0
369	0	370	0	371	0
372	0	373	0	374	0
375	0	376	0	377	0
378	0	379	0	380	0
381	0	382	0	383	0
384	0	385	0	386	0
387	0	388	0	389	0
390	0	391	0	392	0
393	0	394	0	395	0.2
396	1.6	397	3.0	398	3.0
399	2.1	400	2.3	401	4.6
402	7.8	403	9.9	404	10.7
405	10.2	406	10.1	407	10.7
408	10.9	409	11.4	410	11.1
411	10.0	412	8.8	413	8.2
414	8.6	415	10.2	416	11.8

EPA NEW YORK CITY CYCLE—Continued

[Speed versus time sequence]

Time (sec)	Speed (mph)	Time (sec)	Speed (mph)	Time (sec)	Speed (mph)
417	13.0	418	13.3	419	12.8
420	11.7	421	11.7	422	12.4
423	13.7	424	14.4	425	14.3
426	14.7	427	15.1	428	15.3
429	15.8	430	14.5	431	12.2
432	11.1	433	12.0	434	13.1
435	12.2	436	8.9	437	7.7
438	7.6	439	8.0	440	5.5
441	3.3	442	2.4	443	1.4
444	0.6	445	0	446	0
447	0	448	0	449	0
450	0	451	0	452	0
453	0	454	0	455	0
456	0	457	0	458	0
459	0	460	0	461	0
462	0	463	0	464	0
465	0	466	0	467	0
468	0	469	0	470	0
471	0	472	0	473	0
474	0	475	0	476	0
477	0	478	0	479	0
480	0	481	0	482	0
483	0	484	0	485	0
486	0	487	0	488	0
489	0	490	0	491	0
492	0	493	0	494	0
495	1.0	496	4.1	497	7.4
498	10.2	499	11.3	500	11.8
501	12.2	502	14.3	503	16.0
504	17.8	505	18.6	506	19.6
507	20.2	508	19.9	509	19.7
510	20.8	511	21.0	512	18.8
513	17.6	514	13.0	515	7.5
516	2.9	517	0.8	518	0
519	0.2	520	0.7	521	1.4
522	2.3	523	2.7	524	3.0
525	2.6	526	1.2	527	0.1
528	0.7	529	1.8	530	3.1
531	3.9	532	5.3	533	7.8
534	9.7	535	10.3	536	10.2
537	9.4	538	7.1	539	6.8
540	8.9	541	10.6	542	11.9
543	15.5	544	19.6	545	22.8
546	25.1	547	26.0	548	26.7
549	27.3	550	27.7	551	27.6
552	27.3	553	25.7	554	23.3
555	20.6	556	17.8	557	14.9
558	11.3	559	7.4	560	4.6
561	1.7	562	0.7	563	0
564	0	565	0	566	0
567	0	568	0	569	0
570	0	571	0	572	0
573	0	574	0	575	0
576	0	577	0	578	0
579	0	580	0	581	0
582	0	583	0	584	0
585	0	586	0	587	0
588	0	589	0	590	0
591	0	592	0	593	0
594	0	595	0	596	0
597	0	598	0	599	0
600	0				

(f)(1) EPA Engine Dynamometer Schedules for Heavy-duty Otto-cycle engines.

Record (seconds)	Percent	
	Normalized revolutions per minute	Normalized torque
1	0.0	0.0
2	0.0	0.0
3	0.0	0.0
4	0.0	0.0
5	0.0	0.0
6	0.0	0.0
7	0.0	0.0
8	0.0	0.0
9	0.0	0.0
10	0.0	0.0
11	0.0	0.0
12	0.0	0.0
13	0.0	0.0
14	0.0	0.0
15	0.0	0.0
16	0.0	0.0
17	0.0	0.0
18	0.0	0.0
19	0.0	0.0
20	0.0	0.0
21	0.0	0.0
22	0.0	0.0
23	0.0	0.0
24	0.0	0.0
25	7.00	44.40
26	16.00	85.40
27	27.00	97.80
28	38.00	100.00
29	45.00	100.00
30	51.00	100.00
31	54.00	97.50
32	53.00	90.00
33	49.00	75.20
34	45.00	50.00
35	40.00	10.00
36	34.00	2.30
37	27.00	0.0
38	21.00	2.30
39	16.00	12.00
40	12.00	35.30
41	8.50	4.90
42	5.00	−10.00
43	3.00	−10.00
44	0.0	0.0
45	0.0	0.0
46	0.0	0.0
47	0.0	0.0
48	0.0	0.0
49	0.0	0.0
50	0.0	0.0
51	3.00	10.00
52	11.00	40.20
53	20.00	53.00
54	27.50	64.80
55	32.00	78.00
56	32.00	78.00
57	27.50	56.00
58	26.00	24.40
59	24.00	−8.40
60	23.00	−10.00
61	24.00	−10.00
62	27.00	−10.00
63	34.00	−10.00
64	44.00	28.00
65	57.00	74.40
66	60.00	74.40
67	53.00	33.60
68	48.00	−10.00
69	44.00	−10.00
70	40.00	−10.00
71	40.00	7.00
72	44.00	22.70
73	46.00	30.00
74	46.00	32.00
75	44.00	25.00
76	40.00	18.00
77	37.00	14.00
78	36.00	10.00
79	34.00	0.0
80	34.00	−10.00
81	32.00	−10.00
82	31.00	−10.00
83	36.00	39.90
84	42.00	84.70
85	48.00	90.00
86	50.00	90.00
87	50.00	90.00
88	47.00	85.00
89	43.00	75.00
90	38.00	60.00
91	36.00	36.00
92	36.00	7.50
93	36.30	−10.00
94	45.00	64.50
95	53.00	67.00
96	58.00	64.50
97	62.00	60.30
98	63.00	55.50
99	62.00	52.30
100	61.00	47.00
101	55.00	44.00
102	50.00	39.00
103	45.00	36.00
104	40.00	34.00
105	36.00	30.00
106	34.00	25.80
107	32.00	20.00
108	30.00	14.60
109	26.00	10.00
110	23.00	0.0
111	18.00	−8.00
112	16.00	−10.00
113	18.00	−8.00
114	20.00	27.60
115	17.00	4.00
116	14.00	−8.00
117	12.00	−10.00
118	9.00	−10.00
119	7.00	−10.00
120	7.00	−10.00
121	5.00	−10.00
122	4.00	−10.00
123	3.00	−10.00
124	2.00	−8.00
125	0.0	0.0
126	0.0	0.0
127	0.0	0.0
128	0.0	0.0
129	0.0	0.0
130	5.00	8.00
131	8.00	16.30
132	10.00	27.50
133	8.00	27.50
134	5.00	9.00
135	2.00	1.80
136	0.0	0.0
137	0.0	0.0
138	0.0	0.0
139	0.0	0.0

Record (seconds)	Percent	
	Normalized revolutions per minute	Normalized torque
140	0.0	0.0
141	0.0	0.0
142	0.0	0.0
143	0.0	0.0
144	0.0	0.0
145	0.0	0.0
146	0.0	0.0
147	0.0	0.0
148	0.0	0.0
149	2.00	4.80
150	1.00	4.50
151	0.0	0.0
152	0.0	0.0
153	0.0	0.0
154	0.0	0.0
155	0.0	0.0
156	0.0	0.0
157	0.0	0.0
158	0.0	0.0
159	0.0	0.0
160	0.0	0.0
161	0.0	0.0
162	0.0	0.0
163	0.0	0.0
164	0.0	0.0
165	0.0	0.0
166	0.0	0.0
167	8.00	27.00
168	18.00	65.00
169	23.00	82.50
170	23.00	88.00
171	21.00	88.00
172	18.00	81.30
173	17.00	32.00
174	15.00	−10.00
175	13.00	−10.00
176	11.00	−10.00
177	8.00	−10.00
178	6.00	−10.00
179	4.00	−10.00
180	2.00	−10.00
181	0.0	0.0
182	0.0	0.0
183	0.0	0.0
184	0.0	0.0
185	0.0	0.0
186	0.0	0.0
187	0.0	0.0
188	0.0	0.0
189	0.0	0.0
190	0.0	0.0
191	0.0	0.0
192	0.0	0.0
193	0.0	0.0
194	0.0	0.0
195	0.0	0.0
196	0.0	0.0
197	0.0	0.0
198	0.0	0.0
199	0.0	0.0
200	0.0	0.0
201	0.0	0.0
202	0.0	0.0
203	0.0	0.0
204	0.0	4.00
205	0.50	7.70
206	5.00	14.00
207	11.00	24.70
208	15.00	42.30
209	16.00	70.00
210	17.00	70.00
211	17.00	50.00
212	16.00	26.30
213	14.00	5.00
214	10.00	−10.00
215	10.00	−10.00
216	14.00	73.30
217	18.00	83.00
218	19.00	84.80
219	18.00	84.80
220	16.00	82.80
221	11.00	74.00
222	7.00	8.50
223	4.00	0.0
224	0.0	0.0
225	0.0	0.0
226	0.0	0.0
227	0.0	0.0
228	0.0	0.0
229	0.0	0.0
230	0.0	0.0
231	0.0	0.0
232	0.0	0.0
233	6.00	17.60
234	6.00	19.60
235	5.00	14.00
236	3.00	9.80
237	1.00	5.50
238	0.0	3.00
239	0.0	0.0
240	0.0	0.0
241	0.0	0.0
242	0.0	0.0
243	0.0	0.0
244	0.0	0.0
245	0.0	0.0
246	0.0	0.0
247	0.0	0.0
248	0.0	0.0
249	0.0	0.0
250	0.0	0.0
251	0.0	0.0
252	0.0	0.0
253	0.0	0.0
254	0.0	0.0
255	0.0	0.0
256	0.0	0.0
257	0.0	0.0
258	0.0	0.0
259	0.0	0.0
260	0.0	0.0
261	0.0	0.0
262	0.0	0.0
263	0.0	0.0
264	0.0	0.0
265	0.0	0.0
266	0.0	0.0
267	0.0	0.0
268	0.0	0.0
269	0.0	0.0
270	0.0	0.0
271	0.0	0.0
272	0.0	0.0
273	0.0	0.0
274	0.0	0.0
275	0.0	0.0
276	0.0	0.0
277	0.0	0.0
278	0.0	0.0
279	0.0	0.0
280	0.0	0.0
281	0.0	7.00

Record (seconds)	Percent	
	Normalized revolutions per minute	Normalized torque
282	1.00	10.00
283	2.00	11.50
284	1.00	10.00
285	0.0	0.0
286	0.0	0.0
287	0.0	0.0
288	0.0	0.0
289	0.0	0.0
290	0.0	0.0
291	0.0	0.0
292	0.0	0.0
293	0.0	0.0
294	0.0	0.0
295	0.0	0.0
296	0.0	0.0
297	0.0	0.0
298	0.0	0.0
299	0.0	28.00
300	0.0	30.00
301	2.00	32.00
302	6.00	34.00
303	14.00	36.00
304	19.00	36.00
305	24.50	36.00
306	24.50	36.00
307	24.00	30.00
308	19.00	24.00
309	13.00	18.00
310	9.00	14.00
311	7.00	8.00
312	6.00	0.0
313	4.00	3.00
314	3.00	6.80
315	0.0	0.0
316	0.0	0.0
317	0.0	0.0
318	0.0	0.0
319	0.0	0.0
320	0.0	0.0
321	0.0	0.0
322	0.0	0.0
323	0.0	18.00
324	3.00	40.00
325	8.00	86.00
326	18.00	97.00
327	38.00	100.00
328	45.50	100.00
329	45.00	96.00
330	44.00	84.40
331	43.00	53.60
332	41.00	5.00
333	43.00	47.60
334	44.00	90.00
335	45.00	90.00
336	44.00	73.00
337	40.00	54.00
338	38.00	34.70
339	36.00	10.00
340	35.00	10.00
341	35.00	10.00
342	35.50	60.00
343	36.00	57.90
344	37.00	53.00
345	39.00	50.00
346	40.50	50.00
347	43.00	50.00
348	45.00	50.00
349	48.00	50.00
350	51.00	52.00
351	56.00	58.70
352	64.00	70.00
353	68.00	70.00
354	70.00	70.00
355	65.50	64.60
356	61.00	28.90
357	55.00	−5.00
358	50.00	−10.00
359	45.00	−10.00
360	38.00	−10.00
361	28.00	−10.00
362	19.00	−10.00
363	14.00	−10.00
364	7.00	−10.00
365	2.00	−5.00
366	3.00	5.00
367	7.00	25.00
368	9.00	38.00
369	7.00	17.00
370	4.00	2.00
371	3.00	−9.00
372	3.00	−10.00
373	11.00	70.00
374	15.00	97.60
375	16.00	100.00
376	19.00	100.00
377	26.00	100.00
378	29.00	95.00
379	25.00	63.00
380	19.00	−10.00
381	12.00	−10.00
382	8.00	−10.00
383	5.00	−10.00
384	2.00	−10.00
385	1.00	−10.00
386	0.0	0.0
387	0.0	0.0
388	0.0	0.0
389	0.0	0.0
390	0.0	0.0
391	0.0	0.0
392	0.0	0.0
393	0.0	0.0
394	0.0	0.0
395	0.0	0.0
396	0.0	0.0
397	0.0	0.0
398	0.0	0.0
399	0.0	0.0
400	0.0	0.0
401	0.0	0.0
402	0.0	0.0
403	0.0	0.0
404	0.0	0.0
405	0.0	0.0
406	0.0	0.0
407	0.0	0.0
408	0.0	0.0
409	0.0	0.0
410	0.0	0.0
411	0.0	0.0
412	0.0	0.0
413	0.0	0.0
414	0.0	0.0
415	0.0	0.0
416	0.0	0.0
417	0.0	0.0
418	0.0	0.0
419	4.00	20.00
420	4.00	20.00
421	0.0	0.0
422	0.0	0.0
423	0.0	0.0

Record (seconds)	Percent	
	Normalized revolutions per minute	Normalized torque
424	0.0	0.0
425	0.0	0.0
426	0.0	0.0
427	0.0	0.0
428	0.0	0.0
429	0.0	0.0
430	2.00	0.0
431	6.00	2.00
432	14.00	28.80
433	20.00	30.00
434	24.40	11.00
435	24.00	10.00
436	24.00	12.00
437	28.00	52.00
438	32.00	52.00
439	34.00	46.00
440	34.00	30.00
441	34.50	30.00
442	35.00	30.00
443	36.00	35.00
444	39.00	40.00
445	45.00	50.00
446	49.00	56.00
447	50.00	−8.00
448	45.00	−10.00
449	39.00	−10.00
450	34.00	−10.00
451	28.00	−10.00
452	25.00	−10.00
453	21.00	−10.00
454	18.00	−10.00
455	15.00	−10.00
456	12.00	−10.00
457	18.00	−8.00
458	29.00	19.80
459	40.00	54.00
460	52.00	82.00
461	64.00	95.00
462	71.00	99.00
463	77.00	100.00
464	84.00	100.00
465	85.00	99.00
466	85.00	95.00
467	84.00	90.00
468	82.00	84.60
469	80.00	78.50
470	78.00	78.50
471	77.00	70.00
472	76.00	65.50
473	74.00	61.50
474	72.00	56.00
475	70.00	52.00
476	68.00	46.00
477	66.50	40.00
478	65.00	32.00
479	63.00	26.00
480	61.00	25.60
481	61.00	72.00
482	61.00	78.00
483	58.00	72.00
484	50.00	64.00
485	44.00	55.00
486	35.00	40.00
487	26.00	20.00
488	21.00	−4.00
489	18.00	−10.00
490	16.00	−10.00
491	19.00	−8.00
492	24.00	2.00
493	32.00	68.50
494	45.00	78.00
495	51.00	86.00
496	58.00	92.00
497	64.00	97.00
498	71.00	100.00
499	73.00	98.00
500	73.00	94.00
501	73.00	86.00
502	73.00	82.00
503	76.00	84.00
504	80.00	98.00
505	84.00	100.00
506	85.00	100.00
507	84.00	100.00
508	81.00	92.00
509	75.00	80.00
510	73.00	70.00
511	70.00	60.00
512	67.00	53.00
513	65.00	45.00
514	63.00	36.50
515	62.00	28.00
516	61.00	22.50
517	60.00	23.00
518	60.00	24.00
519	60.00	24.00
520	60.00	26.00
521	61.00	60.00
522	62.00	64.00
523	63.00	64.00
524	64.00	64.00
525	62.00	64.00
526	56.00	60.00
527	53.00	−7.00
528	49.00	−10.00
529	47.00	−10.00
530	46.00	−10.00
531	45.00	−7.00
532	45.00	30.00
533	46.00	50.00
534	46.00	50.00
535	47.00	50.00
536	47.00	50.00
537	47.00	30.00
538	46.00	12.00
539	45.00	10.50
540	44.00	10.00
541	41.00	10.00
542	37.00	9.00
543	36.00	2.00
544	35.00	−10.00
545	38.00	67.00
546	35.00	−10.00
547	31.00	15.00
548	28.00	55.00
549	34.00	44.00
550	35.00	38.50
551	36.00	38.50
552	36.00	38.50
553	37.00	38.50
554	39.00	36.00
555	42.00	27.00
556	45.00	62.00
557	48.00	45.00
558	51.00	15.00
559	51.00	8.00
560	51.00	6.00
561	48.00	10.00
562	46.00	11.00
563	44.00	13.00
564	41.00	17.00
565	37.00	20.00

Record (seconds)	Percent	
	Normalized revolutions per minute	Normalized torque
566	34.00	20.00
567	30.00	17.00
568	26.00	14.00
569	23.00	7.00
570	19.00	2.00
571	15.00	−5.00
572	11.00	−10.00
573	8.00	−10.00
574	5.00	−8.00
575	2.00	−5.00
576	0.0	0.0
577	0.0	0.0
578	0.0	0.0
579	0.0	0.0
580	0.0	0.0
581	0.0	0.0
582	0.0	0.0
583	4.00	15.00
584	19.00	31.00
585	30.00	46.00
586	37.00	68.00
587	40.00	76.00
588	41.00	77.00
589	40.50	78.00
590	40.00	77.00
591	40.00	64.00
592	38.00	10.00
593	38.00	25.00
594	40.00	50.00
595	40.00	36.00
596	40.00	31.00
597	40.00	31.00
598	41.00	37.00
599	42.00	97.00
600	43.00	100.00
601	45.00	100.00
602	47.00	100.00
603	48.00	100.00
604	49.00	100.00
605	51.00	97.00
606	52.00	94.00
607	53.00	90.00
608	54.00	87.00
609	56.00	86.00
610	56.00	85.00
611	55.50	85.00
612	55.00	81.00
613	54.00	77.00
614	53.00	72.00
615	52.00	67.00
616	49.00	60.00
617	46.00	45.00
618	45.00	12.00
619	44.00	10.00
620	44.00	10.00
621	45.00	12.00
622	46.00	14.00
623	47.00	24.00
624	49.00	88.00
625	50.00	90.00
626	51.00	90.00
627	52.00	90.00
628	53.00	90.00
629	54.00	90.00
630	54.00	90.00
631	54.00	87.00
632	54.00	84.00
633	54.00	80.00
634	53.50	77.00
635	53.00	76.00
636	53.00	75.00
637	52.00	73.00
638	51.00	69.00
639	50.00	65.00
640	50.00	60.00
641	49.00	55.00
642	49.00	50.00
643	49.00	50.00
644	49.50	60.00
645	49.50	65.00
646	50.00	70.00
647	50.50	75.00
648	51.00	80.00
649	52.00	85.00
650	53.00	90.00
651	54.00	90.00
652	55.00	90.00
653	55.00	88.00
654	55.00	84.00
655	55.00	79.00
656	55.00	74.00
657	55.00	69.00
658	55.00	64.00
659	55.00	59.00
660	55.00	54.00
661	55.00	49.00
662	55.00	44.50
663	55.00	39.00
664	55.00	34.00
665	55.00	27.00
666	55.00	18.00
667	55.00	8.00
668	55.00	6.00
669	55.00	13.00
670	55.00	27.00
671	55.50	30.00
672	56.00	30.00
673	57.00	30.00
674	58.00	34.00
675	59.00	46.00
676	59.00	89.00
677	59.00	90.00
678	59.00	91.00
679	59.00	91.00
680	60.00	91.00
681	60.00	91.00
682	60.50	90.00
683	61.00	89.00
684	61.50	88.00
685	62.00	83.00
686	63.00	73.00
687	65.00	70.00
688	66.00	71.00
689	67.00	74.00
690	67.50	79.00
691	68.00	85.00
692	68.50	90.00
693	69.00	94.00
694	69.50	96.00
695	70.00	98.00
696	70.50	100.00
697	71.00	100.00
698	72.00	100.00
699	72.00	100.00
700	72.00	100.00
701	72.00	100.00
702	72.00	100.00
703	72.00	100.00
704	72.00	100.00
705	72.00	100.00
706	72.00	100.00
707	72.50	100.00

Record (seconds)	Percent	
	Normalized revolutions per minute	Normalized torque
708	73.00	100.00
709	73.50	100.00
710	74.00	100.00
711	74.00	100.00
712	74.50	100.00
713	75.00	100.00
714	75.00	100.00
715	75.00	100.00
716	75.00	100.00
717	75.00	100.00
718	75.00	100.00
719	75.00	100.00
720	75.00	100.00
721	75.00	100.00
722	75.00	100.00
723	75.00	98.00
724	75.00	90.00
725	75.00	34.00
726	74.00	15.00
727	72.00	3.00
728	70.00	−7.00
729	69.00	−10.00
730	68.00	−10.00
731	70.50	53.00
732	73.00	80.00
733	75.00	88.00
734	77.00	94.00
735	79.00	97.00
736	82.00	97.00
737	85.00	98.00
738	85.00	98.00
739	87.00	97.00
740	90.00	95.00
741	92.00	90.00
742	93.00	88.00
743	94.00	86.00
744	95.00	83.00
745	96.00	79.00
746	97.00	74.00
747	98.00	68.00
748	99.00	62.00
749	100.00	54.00
750	100.00	30.00
751	100.00	22.00
752	100.00	20.00
753	100.00	22.00
754	100.00	30.00
755	100.00	65.00
756	100.00	76.00
757	100.00	80.00
758	100.00	78.00
759	100.00	72.00
760	100.00	54.00
761	95.00	30.00
762	85.00	12.00
763	68.00	−5.00
764	57.00	−9.00
765	56.00	−10.00
766	57.00	−9.00
767	57.00	−5.00
768	57.00	22.00
769	58.00	40.00
770	59.00	45.00
771	59.00	46.00
772	59.50	45.00
773	60.00	33.00
774	60.00	0.0
775	60.00	−10.00
776	60.00	−10.00
777	60.00	34.00
778	60.00	50.00
779	60.00	60.00
780	60.00	69.00
781	60.00	75.00
782	60.00	79.00
783	61.00	83.00
784	61.00	84.00
785	61.00	85.00
786	62.00	85.00
787	62.00	85.00
788	62.00	85.00
789	63.00	85.00
790	63.00	85.00
791	64.00	85.00
792	64.00	85.00
793	64.00	85.00
794	64.00	85.00
795	64.00	85.00
796	64.00	84.50
797	64.00	84.00
798	64.00	83.00
799	64.00	82.00
800	64.00	81.00
801	64.00	77.00
802	64.00	72.00
803	65.00	67.00
804	66.00	64.00
805	67.00	60.00
806	69.00	62.30
807	72.00	84.00
808	73.00	90.50
809	74.00	91.00
810	74.00	90.00
811	74.00	84.50
812	73.00	74.00
813	72.00	66.00
814	71.00	60.00
815	70.00	54.00
816	69.00	50.00
817	68.00	49.00
818	68.00	48.00
819	68.00	48.00
820	68.00	48.50
821	68.00	49.00
822	68.00	51.00
823	68.00	53.50
824	68.00	55.00
825	68.00	58.00
826	68.00	60.00
827	68.00	62.00
828	68.00	64.00
829	68.00	67.00
830	69.00	68.50
831	70.00	70.00
832	70.00	70.00
833	70.00	70.00
834	70.00	70.00
835	70.00	70.00
836	70.00	70.00
837	71.00	66.00
838	73.00	64.00
839	75.00	64.00
840	77.00	98.00
841	79.00	100.00
842	81.00	100.00
843	82.00	100.00
844	83.00	100.00
845	84.00	98.00
846	84.00	94.00
847	85.00	93.00
848	86.00	94.00
849	87.00	98.00

Record (seconds)	Percent	
	Normalized revolutions per minute	Normalized torque
850	89.00	100.00
851	92.00	100.00
852	95.00	100.00
853	97.50	100.00
854	100.00	100.00
855	100.00	100.00
856	100.00	100.00
857	100.00	100.00
858	100.00	97.00
859	96.00	−6.00
860	94.00	−10.00
861	91.00	−10.00
862	88.00	−10.00
863	86.00	−10.00
864	84.00	−10.00
865	82.00	−10.00
866	79.00	−10.00
867	77.00	−10.00
868	75.00	−10.00
869	73.00	−10.00
870	72.00	−10.00
871	72.00	−10.00
872	72.00	−8.00
873	71.00	8.00
874	68.00	9.00
875	64.00	−9.00
876	58.00	−8.00
877	56.00	53.00
878	56.00	67.00
879	56.00	70.00
880	56.00	67.00
881	55.00	60.00
882	54.00	60.00
883	49.00	75.00
884	38.00	80.00
885	30.00	78.00
886	25.00	53.00
887	18.00	32.00
888	14.00	16.00
889	9.00	3.00
890	5.00	−6.00
891	1.00	−10.00
892	0.0	0.0
893	0.0	0.0
894	0.0	0.0
895	0.0	0.0
896	0.0	0.0
987	0.0	0.0
898	0.0	0.0
899	0.0	0.0
900	0.0	0.0
901	0.0	0.0
902	0.0	0.0
903	0.0	0.0
904	0.0	0.0
905	0.0	0.0
906	0.0	0.0
907	0.0	0.0
908	0.0	0.0
909	0.0	0.0
910	0.0	0.0
911	0.0	0.0
912	0.0	0.0
913	0.0	0.0
914	0.0	0.0
915	0.0	0.0
916	0.0	0.0
917	0.0	0.0
918	0.0	0.0
919	0.0	0.0
920	4.50	47.00
921	12.00	85.00
922	30.00	97.00
923	42.00	100.00
924	51.00	100.00
925	54.00	100.00
926	54.00	97.00
927	52.00	90.00
928	48.00	75.00
929	44.00	57.00
930	37.00	47.00
931	29.00	40.00
932	24.00	34.00
933	21.00	27.00
934	22.00	24.00
935	22.50	22.00
936	20.00	16.00
937	15.00	7.00
938	10.00	0.0
939	5.00	−7.00
940	2.00	−10.00
941	1.00	−10.00
942	0.0	0.0
943	0.0	0.0
944	0.0	0.0
945	1.00	0.0
946	5.00	20.00
947	15.00	43.00
948	28.00	52.00
949	34.00	64.00
950	37.00	74.00
951	37.50	90.00
952	37.00	56.00
953	36.00	27.00
954	35.00	−2.00
955	33.00	−8.00
956	29.00	−10.00
957	29.00	−8.00
958	29.00	−2.00
959	34.00	30.00
960	38.00	75.00
961	34.00	70.00
962	31.00	25.00
963	28.00	−7.00
964	26.00	−10.00
965	24.00	−7.00
966	23.00	4.00
967	23.00	22.00
968	24.00	30.00
969	23.00	32.00
970	22.00	25.00
971	18.00	18.00
972	16.00	14.00
973	15.00	10.00
974	15.00	0.0
975	15.00	−7.00
976	15.00	−10.00
977	18.00	−8.00
978	25.00	40.00
979	37.00	90.00
980	46.00	90.00
981	49.00	90.00
982	49.00	90.00
983	49.00	85.00
984	47.00	77.00
985	44.00	59.00
986	43.00	36.00
987	42.00	13.00
988	40.00	−10.00
989	41.00	65.00
990	44.00	65.00
991	45.00	65.00

Record (seconds)	Percent	
	Normalized revolutions per minute	Normalized torque
992	45.00	62.00
993	44.00	56.00
994	42.00	46.00
995	41.00	36.00
996	39.00	20.00
997	38.00	4.00
998	37.00	33.00
999	38.00	39.00
1,000	36.00	40.00
1,001	35.00	40.00
1,002	33.00	39.00
1,003	30.00	36.00
1,004	27.00	33.00
1,005	22.00	24.00
1,006	21.00	−5.00
1,007	20.00	−10.00
1,008	18.00	−6.00
1,009	17.00	28.00
1,010	16.00	5.00
1,011	14.00	−5.00
1,012	12.00	−9.00
1,013	9.00	−10.00
1,014	7.00	−10.00
1,015	5.00	−10.00
1,016	4.00	−10.00
1,017	3.00	−10.00
1,018	2.00	−10.00
1,019	0.0	0.0
1,020	0.0	0.0
1,021	0.0	0.0
1,022	0.0	0.0
1,023	0.0	0.0
1,024	0.0	0.0
1,025	2.00	7.00
1,026	6.00	15.00
1,027	10.00	28.00
1,028	11.00	26.00
1,029	10.00	10.00
1,030	8.00	3.00
1,031	5.00	0.0
1,032	2.00	0.0
1,033	0.0	0.0
1,034	0.0	0.0
1,035	0.0	0.0
1,036	0.0	0.0
1,037	0.0	0.0
1,038	0.0	0.0
1,039	0.0	0.0
1,040	0.0	0.0
1,041	0.0	0.0
1,042	0.0	0.0
1,043	0.0	0.0
1,044	0.0	0.0
1,045	0.0	0.0
1,046	0.0	0.0
1,047	0.0	0.0
1,048	0.0	0.0
1,049	0.0	0.0
1,050	0.0	0.0
1,051	0.0	0.0
1,052	0.0	0.0
1,053	0.0	0.0
1,054	0.0	0.0
1,055	0.0	0.0
1,056	0.0	0.0
1,057	0.0	0.0
1,058	0.0	0.0
1,059	0.0	0.0
1,060	0.0	0.0
1,061	4.00	05.00
1,062	11.00	35.00
1,063	21.00	73.00
1,064	25.00	86.00
1,065	26.00	90.00
1,066	25.00	90.00
1,067	23.00	83.00
1,068	20.00	32.00
1,069	16.00	−6.00
1,070	14.00	−10.00
1,071	10.00	−10.00
1,072	7.00	−10.00
1,073	3.00	−10.00
1,074	1.00	−10.00
1,075	0.0	0.0
1,076	0.0	0.0
1,077	0.0	0.0
1,078	0.0	0.0
1,079	0.0	0.0
1,080	0.0	0.0
1,081	0.0	0.0
1,082	0.0	0.0
1,083	0.0	0.0
1,084	0.0	0.0
1,085	0.0	0.0
1,086	0.0	0.0
1,087	0.0	0.0
1,088	0.0	0.0
1,089	0.0	0.0
1,090	0.0	0.0
1,091	0.0	0.0
1,092	0.0	0.0
1,093	0.0	0.0
1,094	0.0	0.0
1,095	0.0	0.0
1,096	0.0	0.0
1,097	0.0	0.0
1,098	1.00	3.00
1,099	3.00	6.00
1,100	6.00	13.00
1,101	9.00	14.00
1,102	12.00	16.00
1,103	15.00	28.00
1,104	18.00	60.00
1,105	20.00	47.00
1,106	21.00	31.00
1,107	21.00	15.00
1,108	20.00	−2.00
1,109	20.00	−10.00
1,110	20.00	−2.00
1,111	20.00	70.00
1,112	21.00	83.00
1,113	22.00	84.00
1,114	22.00	83.00
1,115	18.00	78.00
1,116	14.00	68.00
1,117	8.00	10.00
1,118	4.00	4.00
1,119	1.00	0.0
1,120	0.0	0.0
1,121	0.0	0.0
1,122	0.0	0.0
1,123	0.0	0.0
1,124	0.0	0.0
1,125	0.0	1.00
1,126	1.00	5.00
1,127	5.00	18.00
1,128	9.00	19.00
1,129	12.00	18.00
1,130	12.00	15.00
1,131	9.00	10.00
1,132	5.00	5.00
1,133	2.00	2.00

Record (seconds)	Percent	
	Normalized revolutions per minute	Normalized torque
1,134	0.0	0.0
1,135	0.0	0.0
1,136	0.0	0.0
1,137	0.0	0.0
1,138	0.0	0.0
1,139	0.0	0.0
1,140	0.0	0.0
1,141	0.0	0.0
1,142	0.0	0.0
1,143	0.0	0.0
1,144	0.0	0.0
1,145	0.0	0.0
1,146	0.0	0.0
1,147	0.0	0.0
1,148	0.0	0.0
1,149	0.0	0.0
1,150	0.0	0.0
1,151	0.0	0.0
1,152	0.0	0.0
1,153	0.0	0.0
1,154	0.0	0.0
1,155	0.0	0.0
1,156	0.0	0.0
1,157	0.0	0.0
1,158	0.0	0.0
1,159	0.0	0.0
1,160	0.0	0.0
1,161	0.0	0.0
1,162	0.0	0.0
1,163	0.0	0.0
1,164	0.0	0.0
1,165	0.0	0.0
1,166	0.0	0.0
1,167	0.0	0.0

(2) EPA Engine Dynamometer Schedule for Heavy-Duty Diesel Engines.

Record (seconds)	Percent	
	Normalized revolutions per minute	Normalized torque
1	0.0	0.0
2	0.0	0.0
3	0.0	0.0
4	0.0	0.0
5	0.0	0.0
6	0.0	0.0
7	0.0	0.0
8	0.0	0.0
9	0.0	0.0
10	0.0	0.0
11	0.0	0.0
12	0.0	0.0
13	0.0	0.0
14	0.0	0.0
15	0.0	0.0
16	0.0	0.0
17	0.0	0.0
18	0.0	0.0
19	0.0	0.0
20	0.0	0.0
21	0.0	0.0
22	0.0	0.0
23	0.0	0.0
24	0.0	0.0
25	0.0	3.67
26	0.0	47.69
27	3.11	59.41
28	9.09	84.54
29	15.62	80.00
30	33.49	80.00
31	37.93	79.29
32	31.20	38.25
33	21.99	26.67
34	30.00	15.10
35	22.23	16.47
36	19.61	28.05
37	20.00	20.38
38	18.33	(1)
39	6.55	(1)
40	15.82	(1)
41	23.63	(1)
42	17.51	(1)
43	14.19	62.52
44	16.64	69.36
45	27.77	60.00
46	37.03	63.79
47	47.36	75.36
48	54.77	80.00
49	57.70	80.00
50	54.03	79.92
51	58.00	65.03
52	58.65	43.23
53	62.88	50.00
54	69.83	50.00
55	72.00	42.05
56	75.81	40.00
57	84.22	42.20
58	83.86	41.28
59	80.55	(1)
60	80.51	(1)
61	78.00	(1)
62	79.79	(1)
63	80.33	30.54
64	85.58	42.12
65	81.78	50.00
66	78.00	50.00
67	80.74	43.16
68	92.10	73.65
69	88.01	(1)
70	84.00	(1)
71	84.00	(1)
72	81.17	(1)
73	70.46	(1)
74	66.00	13.57
75	62.23	29.43
76	64.00	20.00
77	63.48	17.42
78	60.34	10.00
79	56.85	10.00
80	56.00	(1)
81	52.45	(1)
82	39.91	10.00
83	36.38	10.00
84	30.00	10.00
85	27.93	10.00
86	26.00	16.74
87	27.66	3.36
88	28.00	(1)
89	27.41	(1)
90	20.96	(1)
91	12.15	(1)
92	3.81	(1)
93	0.0	0.0
94	0.0	0.0
95	0.0	0.91
96	0.0	7.52
97	0.0	0.0
98	0.0	0.0

Record (seconds)	Percent	
	Normalized revolutions per minute	Normalized torque
99	0.0	0.0
100	0.0	0.0
101	0.0	0.0
102	0.0	0.0
103	0.0	0.0
104	0.0	0.0
105	0.0	0.0
106	0.0	0.0
107	0.0	0.0
108	0.0	0.0
109	0.0	0.0
110	0.0	0.0
111	0.0	0.0
112	0.0	0.0
113	0.0	0.0
114	0.0	0.0
115	0.0	0.0
116	0.0	0.0
117	0.0	0.0
118	0.0	0.0
119	0.0	0.0
120	0.0	0.0
121	0.0	0.0
122	0.0	0.0
123	0.0	0.0
124	0.0	0.0
125	0.0	0.0
126	0.0	0.0
127	0.0	0.0
128	0.0	0.0
129	1.77	(1)
130	1.60	(1)
131	0.0	0.0
132	0.0	0.0
133	2.14	9.28
134	3.08	0.0
135	0.0	0.0
136	0.0	0.0
137	0.0	0.0
138	0.0	0.0
139	0.0	0.0
140	0.0	0.0
141	0.0	0.0
142	0.0	0.0
143	0.0	0.0
144	0.0	0.0
145	0.0	0.0
146	0.0	0.0
147	0.0	5.51
148	0.0	11.34
149	0.0	0.0
150	0.0	0.0
151	0.0	0.0
152	0.0	0.0
153	0.0	0.0
154	0.0	0.0
155	0.0	0.0
156	0.0	0.0
157	0.0	0.0
158	0.0	0.21
159	0.0	30.00
160	0.0	26.78
161	0.0	20.00
162	0.0	20.00
163	0.0	4.12
164	0.0	0.0
165	0.0	0.0
166	0.0	0.0
167	0.0	0.0
168	0.0	0.0
169	0.0	0.0
170	0.0	0.0
171	0.0	0.0
172	0.0	0.0
173	0.0	0.0
174	0.0	0.0
175	0.0	0.0
176	0.0	0.0
177	0.0	0.0
178	0.0	0.0
179	0.0	0.0
180	0.0	0.0
181	0.0	0.0
182	0.0	0.0
183	0.0	0.0
184	0.0	20.00
185	0.0	20.00
186	0.0	11.73
187	0.0	0.0
188	0.0	0.0
189	0.0	0.0
190	0.0	0.0
191	0.0	0.0
192	0.0	0.0
193	0.0	0.0
194	0.0	0.0
195	0.0	0.0
196	0.0	0.0
197	0.0	0.0
198	0.0	0.0
199	0.0	0.0
200	0.0	0.0
201	0.0	0.0
202	0.0	0.0
203	0.0	0.0
204	0.0	0.0
205	0.0	0.0
206	0.0	0.0
207	0.0	0.0
208	0.0	0.0
209	0.0	0.0
210	0.0	0.0
211	0.0	0.0
212	0.0	0.0
213	0.0	0.0
214	0.0	73.41
215	0.0	90.00
216	31.30	81.30
217	41.15	90.00
218	44.00	90.00
219	46.41	90.00
220	51.04	82.41
221	66.66	80.00
222	75.03	90.00
223	89.85	90.00
224	96.78	93.88
225	96.91	50.94
226	94.60	17.02
227	99.16	28.60
228	100.00	39.83
229	100.00	30.00
230	100.00	26.69
231	100.98	20.00
232	100.71	20.00
233	100.00	36.06
234	96.16	40.00
235	95.77	30.00
236	94.55	32.75
237	96.86	35.68
238	99.18	30.00
239	100.00	44.93
240	101.81	50.00

Record (seconds)	Percent	
	Normalized revolutions per minute	Normalized torque
241	86.54	(1)
242	63.56	(1)
243	56.00	(1)
244	46.00	(1)
245	41.86	45.18
246	38.31	78.47
247	35.98	80.00
248	31.03	80.00
249	25.36	80.00
250	23.05	60.97
251	18.20	27.34
252	12.84	43.71
253	10.10	68.95
254	3.79	68.95
255	1.48	44.28
256	0.0	0.0
257	0.0	0.0
258	0.0	0.0
259	0.0	0.0
260	0.0	0.0
261	0.0	0.0
262	0.0	0.0
263	0.0	24.97
264	0.0	17.16
265	0.0	6.20
266	0.0	10.00
267	0.0	10.00
268	0.0	0.0
269	0.0	0.0
270	0.0	0.0
271	0.0	0.0
272	0.0	0.0
273	0.0	0.0
274	0.0	0.0
275	0.0	0.0
276	0.0	0.0
277	0.0	0.0
278	0.0	0.0
279	0.0	0.0
280	0.0	0.0
281	0.0	0.0
282	0.0	0.0
283	0.0	0.0
284	0.0	0.0
285	0.0	0.0
286	0.0	0.0
287	0.0	0.0
288	0.0	0.0
289	0.0	0.0
290	0.0	0.0
291	0.0	0.0
292	0.0	0.0
293	0.0	0.0
294	0.0	0.0
295	0.0	0.0
296	0.0	0.0
297	0.0	0.0
298	0.0	0.0
299	0.0	0.0
300	0.0	0.0
301	0.0	0.0
302	0.0	0.0
303	0.0	0.0
304	0.0	0.0
305	0.0	0.0
306	0.0	0.0
307	0.0	0.0
308	0.0	0.0
309	0.0	0.0
310	0.0	0.0
311	0.0	0.0
312	0.0	0.0
313	0.0	0.0
314	0.0	0.0
315	0.0	0.0
316	0.0	0.0
317	0.0	0.0
318	0.0	0.0
319	0.0	0.0
320	0.0	0.0
321	0.0	15.55
322	0.0	20.00
323	24.18	19.08
324	23.00	10.00
325	11.56	1.86
326	6.87	(1)
327	6.00	(1)
328	0.72	(1)
329	0.0	0.0
330	0.0	0.0
331	0.0	0.0
332	0.0	0.0
333	0.0	0.0
334	0.0	0.0
335	0.0	0.0
336	0.0	0.0
337	0.0	0.0
338	0.0	0.0
339	0.0	0.0
340	0.0	0.0
341	0.0	0.0
342	0.0	0.0
343	0.0	0.0
344	0.0	0.0
345	0.0	0.0
346	0.0	0.0
347	0.0	0.0
348	0.0	0.0
349	0.0	0.0
350	0.0	0.0
351	0.0	0.0
352	0.0	0.0
353	0.0	0.0
354	0.0	0.0
355	0.0	0.0
356	0.0	0.0
357	0.0	0.0
358	0.0	0.0
359	0.0	0.0
360	0.0	0.0
361	0.0	0.0
362	0.0	0.0
363	0.0	0.0
364	0.0	0.0
365	0.0	0.0
366	0.0	0.0
367	0.0	0.0
368	0.0	0.0
369	0.0	0.0
370	0.0	0.0
371	0.0	0.0
372	0.0	0.0
373	0.0	0.0
374	0.0	0.0
375	0.0	0.0
376	0.0	0.0
377	0.0	29.59
378	−1.50	87.46
379	8.88	100.00
380	46.04	100.00
381	76.89	100.00
382	80.00	100.00

Record (seconds)	Percent	
	Normalized revolutions per minute	Normalized torque
383	82.14	94.64
384	85.39	83.07
385	87.70	88.51
386	92.00	79.83
387	92.00	61.66
388	94.58	66.77
389	102.88	60.00
390	106.00	72.76
391	109.18	8.43
392	111.91	(1)
393	82.00	(1)
394	79.33	(1)
395	71.15	(1)
396	68.84	(1)
397	78.35	49.17
398	82.00	70.00
399	80.65	69.46
400	92.85	60.00
401	97.48	60.00
402	98.95	60.00
403	100.74	60.00
404	103.68	43.17
405	104.00	10.04
406	80.62	20.00
407	83.37	20.00
408	81.06	15.29
409	80.00	10.00
410	76.86	(1)
411	74.11	(1)
412	71.60	(1)
413	70.58	(1)
414	78.00	(1)
415	80.29	1.45
416	80.54	17.30
417	78.23	11.13
418	78.45	19.55
419	84.36	24.16
420	72.16	80.00
421	79.10	74.83
422	90.09	16.04
423	74.04	(1)
424	68.02	(1)
425	68.53	(1)
426	59.39	(1)
427	63.54	(1)
428	70.00	2.38
429	73.10	17.76
430	72.13	(1)
431	67.27	(1)
432	36.03	(1)
433	20.75	(1)
434	11.49	(1)
435	−2.09	0.0
436	−0.73	0.0
437	8.57	60.00
438	30.55	61.93
439	67.10	63.00
440	86.03	39.85
441	89.33	30.00
442	91.64	30.00
443	97.88	10.40
444	97.73	1.37
445	96.00	10.00
446	96.00	0.96
447	96.00	(1)
448	85.27	28.34
449	87.54	30.76
450	86.16	29.18
451	88.00	20.00
452	87.21	20.00
453	86.00	20.00
454	87.42	20.00
455	88.00	11.32
456	77.84	(1)
457	72.00	(1)
458	71.32	(1)
459	70.00	0.04
460	70.00	(1)
461	74.88	(1)
462	74.06	(1)
463	67.74	(1)
464	66.00	(1)
465	64.23	(1)
466	62.00	(1)
467	55.94	(1)
468	54.00	(1)
469	66.43	(1)
470	75.21	70.00
471	86.00	54.53
472	86.00	24.56
473	88.81	(1)
474	90.00	(1)
475	105.48	(1)
476	74.00	(1)
477	73.34	(1)
478	71.02	10.00
479	76.46	29.38
480	81.61	40.00
481	78.16	30.39
482	74.13	26.46
483	90.00	0.0
484	90.87	0.0
485	92.00	(1)
486	93.50	(1)
487	94.00	(1)
488	94.13	(1)
489	88.96	(1)
490	63.25	(1)
491	62.00	(1)
492	49.54	45.37
493	52.49	86.99
494	64.00	90.00
495	64.99	90.00
496	71.93	93.22
497	78.87	95.21
498	82.00	83.64
499	86.76	80.00
500	93.71	80.00
501	94.87	80.00
502	103.60	80.00
503	101.23	41.89
504	95.48	24.85
505	98.00	50.00
506	99.79	50.00
507	106.21	46.82
508	110.84	(1)
509	98.55	(1)
510	70.95	(1)
511	67.27	(1)
512	60.96	(1)
513	48.03	(1)
514	52.31	(1)
515	54.00	(1)
516	65.27	(1)
517	78.00	(1)
518	57.61	(1)
519	42.58	(1)
520	38.81	(1)
521	22.37	(1)
522	3.52	(1)
523	0.0	0.0
524	−1.46	36.39

Record (seconds)	Percent	
	Normalized revolutions per minute	Normalized torque
525	−0.23	5.75
526	0.0	0.0
527	0.0	0.0
528	0.0	0.0
529	0.0	0.0
530	0.0	0.0
531	0.0	0.0
532	0.0	0.0
533	0.0	0.0
534	0.0	0.0
535	0.0	0.0
536	0.0	0.0
537	0.0	0.0
538	0.0	0.0
539	0.0	0.0
540	0.0	0.0
541	0.0	0.0
542	0.0	0.0
543	0.0	0.0
544	0.0	(1)
545	0.0	0.0
546	−0.75	0.0
547	−0.56	0.0
548	4.00	(1)
549	0.68	(1)
550	0.0	0.0
551	0.0	0.0
552	0.0	2.60
553	0.0	20.00
554	0.0	20.00
555	0.0	7.96
556	0.0	0.0
557	0.0	0.0
558	0.0	78.53
559	1.85	60.00
560	11.10	63.88
561	16.00	70.00
562	30.05	70.00
563	42.88	70.00
564	56.10	70.00
565	63.39	66.52
566	70.66	59.94
567	72.98	80.00
568	77.87	86.46
569	88.03	90.00
570	90.00	90.00
571	92.23	100.00
572	94.00	100.00
573	94.86	100.00
574	96.00	100.00
575	97.49	100.00
576	108.84	100.00
577	110.00	83.92
578	104.77	(1)
579	87.50	(1)
580	90.00	0.0
581	91.38	(1)
582	81.84	(1)
583	65.99	(1)
584	63.68	(1)
585	60.73	(1)
586	57.05	(1)
587	53.47	(1)
588	50.42	(1)
589	44.31	(1)
590	37.58	37.91
591	33.48	20.00
592	31.16	20.00
593	28.85	20.00
594	22.13	20.00
595	9.31	(1)
596	0.0	0.0
597	0.0	0.0
598	0.0	0.0
599	0.0	0.0
600	0.0	0.0
601	0.0	0.0
602	0.0	0.0
603	0.0	0.0
604	0.0	0.0
605	0.0	0.0
606	2.52	6.30
607	10.30	17.87
608	13.89	20.00
609	20.20	20.00
610	24.07	22.59
611	33.33	17.50
612	40.30	(1)
613	47.85	(1)
614	66.00	7.78
615	68.00	10.93
616	67.59	32.04
617	66.00	40.00
618	67.04	40.00
619	68.00	40.00
620	68.00	48.33
621	75.93	99.53
622	78.00	100.00
623	78.00	100.00
624	77.07	100.00
625	76.00	100.00
626	76.00	100.00
627	76.00	100.00
628	75.63	100.00
629	73.00	97.50
630	76.81	90.00
631	80.26	90.00
632	83.44	90.00
633	84.00	98.79
634	84.00	100.00
635	83.61	100.00
636	82.00	100.00
637	83.02	94.91
638	86.67	90.00
639	89.65	90.00
640	90.00	99.81
641	89.45	100.00
642	86.00	100.00
643	86.00	95.47
644	87.22	90.00
645	88.00	90.00
646	88.00	80.74
647	88.00	79.17
648	88.00	77.21
649	88.00	100.00
650	88.00	94.45
651	88.00	90.00
652	88.00	90.00
653	90.00	90.00
654	89.63	90.00
655	88.68	90.00
656	90.00	90.00
657	90.00	90.00
658	91.63	81.86
659	92.00	80.00
660	90.00	81.29
661	89.43	92.86
662	87.11	100.00
663	86.00	100.00
664	86.00	100.00
665	89.66	100.00
666	90.00	99.27

Record (seconds)	Percent	
	Normalized revolutions per minute	Normalized torque
667	90.46	90.00
668	92.78	90.00
669	95.09	90.00
670	100.22	82.97
671	102.00	80.00
672	102.00	70.18
673	102.00	80.00
674	97.34	50.07
675	87.02	(1)
676	86.00	(1)
677	73.12	22.19
678	75.77	39.62
679	75.76	48.80
680	75.11	37.23
681	78.00	34.34
682	80.37	40.00
683	77.51	47.49
684	81.44	50.00
685	82.13	39.36
686	84.00	27.79
687	84.00	16.21
688	84.00	15.36
689	85.39	26.93
690	86.00	30.00
691	86.00	30.08
692	85.67	40.00
693	84.65	40.00
694	86.00	35.20
695	87.28	30.00
696	88.00	22.05
697	86.09	(1)
698	83.78	(1)
699	81.47	(1)
700	81.70	(1)
701	85.16	(1)
702	84.52	(1)
703	82.21	(1)
704	79.89	(1)
705	77.58	(1)
706	76.00	6.31
707	79.16	0.0
708	75.16	27.36
709	72.00	40.00
710	72.00	40.00
711	74.00	38.44
712	74.00	30.00
713	74.00	30.00
714	74.00	36.28
715	72.43	47.86
716	68.23	59.43
717	73.80	50.00
718	72.52	50.00
719	74.00	45.85
720	72.85	57.18
721	76.38	62.70
722	81.55	60.00
723	80.18	60.00
724	83.60	60.00
725	83.44	56.40
726	86.00	50.00
727	87.35	50.00
728	86.34	50.00
729	86.00	40.11
730	88.29	61.47
731	88.78	63.92
732	86.92	50.00
733	86.76	50.00
734	87.55	42.24
735	88.00	49.34
736	86.00	50.91
737	86.00	67.45
738	86.00	81.88
739	87.13	70.00
740	89.44	77.21
741	91.76	88.78
742	90.07	89.65
743	92.00	80.00
744	92.70	80.00
745	94.00	80.00
746	94.00	80.00
747	94.00	80.00
748	94.00	80.00
749	94.00	81.37
750	94.59	87.05
751	96.00	57.40
752	96.00	42.19
753	96.00	42.33
754	96.00	40.00
755	96.00	38.37
756	96.00	12.83
757	96.00	(1)
758	96.00	(1)
759	96.00	(1)
760	97.74	7.37
761	100.05	19.74
762	102.00	11.83
763	102.00	26.81
764	103.00	49.96
765	104.00	60.00
766	102.37	60.00
767	103.94	60.00
768	104.00	40.00
769	104.00	25.75
770	103.12	(1)
771	100.80	(1)
772	100.00	(1)
773	101.83	44.88
774	102.00	36.40
775	102.00	(1)
776	102.00	(1)
777	100.91	(1)
778	101.40	(1)
779	100.28	(1)
780	97.97	(1)
781	96.00	(1)
782	96.00	10.00
783	96.00	0.23
784	96.00	(1)
785	96.00	(1)
786	94.08	(1)
787	78.00	(1)
788	77.45	(1)
789	71.67	28.96
790	67.18	80.00
791	66.50	87.48
792	71.43	90.00
793	74.13	90.00
794	75.56	92.20
795	74.75	100.00
796	77.07	94.65
797	79.38	83.08
798	80.00	71.51
799	80.01	69.93
800	82.33	58.36
801	84.00	50.00
802	84.00	59.58
803	84.00	76.36
804	84.00	80.00
805	84.00	70.49
806	82.00	80.00
807	81.47	82.66
808	80.00	90.00

Record (seconds)	Percent	
	Normalized revolutions per minute	Normalized torque
809	77.68	90.00
810	74.52	75.24
811	77.58	78.96
812	81.89	80.00
813	80.42	80.00
814	82.00	83.68
815	83.05	79.50
816	84.00	70.00
817	84.00	61.60
818	84.00	50.03
819	86.00	60.00
820	86.00	60.00
821	86.00	69.39
822	88.51	73.73
823	88.43	70.00
824	88.00	70.00
825	94.00	70.99
826	94.51	80.00
827	95.17	80.00
828	95.14	80.00
829	94.54	80.00
830	94.00	80.00
831	94.00	77.89
832	94.00	31.99
833	94.00	43.57
834	94.00	60.28
835	94.00	63.29
836	94.00	76.57
837	94.00	89.86
838	94.29	90.00
839	97.80	87.00
840	102.91	80.00
841	104.00	73.85
842	104.00	62.28
843	104.00	69.29
844	106.00	70.00
845	106.00	62.70
846	106.00	40.00
847	104.88	40.00
848	104.00	32.85
849	104.00	30.00
850	104.00	0.30
851	103.63	11.87
852	100.62	13.12
853	98.00	5.01
854	96.68	10.00
855	96.00	(1)
856	96.00	(1)
857	96.00	(1)
858	95.43	(1)
859	94.00	(1)
860	94.00	(1)
861	95.52	5.18
862	97.83	(1)
863	98.00	(1)
864	98.00	(1)
865	97.22	(1)
866	96.00	6.35
867	96.00	12.98
868	96.00	10.00
869	95.93	10.00
870	92.00	10.00
871	92.00	10.00
872	92.98	14.89
873	94.00	13.54
874	90.79	42.12
875	88.08	40.40
876	86.23	30.00
877	88.00	32.75
878	87.14	44.32
879	84.82	50.00
880	82.51	50.00
881	82.00	50.00
882	82.12	40.00
883	83.13	35.64
884	80.00	20.00
885	84.26	51.95
886	86.62	66.21
887	84.31	60.00
888	81.99	9.96
889	79.35	1.61
890	75.36	19.56
891	73.05	40.00
892	70.73	8.35
893	68.42	(1)
894	47.15	8.95
895	35.79	10.00
896	32.95	7.38
897	29.16	(1)
898	16.47	(1)
899	2.13	(1)
900	0.0	0.0
901	0.0	0.0
902	0.0	0.0
903	0.0	0.0
904	0.0	0.0
905	0.0	0.0
906	0.0	0.0
907	0.0	0.0
908	0.0	0.0
909	0.0	0.0
910	0.0	0.0
911	0.0	0.0
912	0.0	0.0
913	0.0	0.0
914	0.0	0.0
915	0.0	0.0
916	0.0	0.0
917	0.0	0.0
918	0.0	0.0
919	0.0	0.0
920	0.0	0.0
921	0.0	0.0
922	0.0	0.0
923	0.0	0.0
924	0.0	0.0
925	0.0	0.0
926	0.0	0.0
927	0.0	3.67
928	0.0	47.69
929	3.11	59.41
930	9.09	84.54
931	15.62	80.00
932	33.49	80.00
933	37.93	79.29
934	31.20	38.25
935	21.99	26.67
936	30.00	15.10
937	22.23	16.47
938	19.61	28.05
939	20.00	20.38
940	18.33	(1)
941	6.55	(1)
942	15.82	(1)
943	23.63	(1)
944	17.51	(1)
945	14.19	62.52
946	16.64	69.36
947	27.77	60.00
948	37.03	63.79
949	47.36	75.36
950	54.77	80.00

Record (seconds)	Percent	
	Normalized revolutions per minute	Normalized torque
951	57.70	80.00
952	54.03	79.92
953	58.00	65.03
954	58.65	43.23
955	62.88	50.00
956	69.83	50.00
957	72.00	42.05
958	75.81	40.00
959	84.22	42.20
960	83.86	41.28
961	80.55	(1)
962	80.51	(1)
963	78.00	(1)
964	79.79	(1)
965	80.33	30.54
966	85.58	42.12
967	81.78	50.00
968	78.00	50.00
969	80.74	43.16
970	92.10	73.65
971	88.01	(1)
972	84.00	(1)
973	84.00	(1)
974	81.17	(1)
975	70.46	(1)
976	66.00	13.57
977	62.23	29.43
978	64.00	20.00
979	63.48	17.42
980	60.34	10.00
981	56.85	10.00
982	56.00	(1)
983	52.45	(1)
984	39.91	10.00
985	36.38	10.00
986	30.00	10.00
987	27.93	10.00
988	26.00	16.74
989	27.66	3.36
990	28.00	(1)
991	27.41	(1)
992	20.96	(1)
993	12.15	(1)
994	3.81	(1)
995	0.0	0.0
996	0.0	0.0
997	0.0	0.91
998	0.0	7.52
999	0.0	0.0
1,000	0.0	0.0
1,001	0.0	0.0
1,002	0.0	0.0
1,003	0.0	0.0
1,004	0.0	0.0
1,005	0.0	0.0
1,006	0.0	0.0
1,007	0.0	0.0
1,008	0.0	0.0
1,009	0.0	0.0
1,010	0.0	0.0
1,011	0.0	0.0
1,012	0.0	0.0
1,013	0.0	0.0
1,014	0.0	0.0
1,015	0.0	0.0
1,016	0.0	0.0
1,017	0.0	0.0
1,018	0.0	0.0
1,019	0.0	0.0
1,020	0.0	0.0
1,021	0.0	0.0
1,022	0.0	0.0
1,023	0.0	0.0
1,024	0.0	0.0
1,025	0.0	0.0
1,026	0.0	0.0
1,027	0.0	0.0
1,028	0.0	0.0
1,029	0.0	0.0
1,030	0.0	0.0
1,031	1.77	(1)
1,032	1.60	(1)
1,033	0.0	0.0
1,034	0.0	0.0
1,035	2.14	9.28
1,036	3.08	0.0
1,037	0.0	0.0
1,038	0.0	0.0
1,039	0.0	0.0
1,040	0.0	0.0
1,041	0.0	0.0
1,042	0.0	0.0
1,043	0.0	0.0
1,044	0.0	0.0
1,045	0.0	0.0
1,046	0.0	0.0
1,047	0.0	0.0
1,048	0.0	0.0
1,049	0.0	5.51
1,050	0.0	11.34
1,051	0.0	0.0
1,052	0.0	0.0
1,053	0.0	0.0
1,054	0.0	0.0
1,055	0.0	0.0
1,056	0.0	0.0
1,057	0.0	0.0
1,058	0.0	0.0
1,059	0.0	0.0
1,060	0.0	0.21
1,061	0.0	30.00
1,062	0.0	26.78
1,063	0.0	20.00
1,064	0.0	20.00
1,065	0.0	4.12
1,066	0.0	0.0
1,067	0.0	0.0
1,068	0.0	0.0
1,069	0.0	0.0
1,070	0.0	0.0
1,071	0.0	0.0
1,072	0.0	0.0
1,073	0.0	0.0
1,074	0.0	0.0
1,075	0.0	0.0
1,076	0.0	0.0
1,077	0.0	0.0
1,078	0.0	0.0
1,079	0.0	0.0
1,080	0.0	0.0
1,081	0.0	0.0
1,082	0.0	0.0
1,083	0.0	0.0
1,084	0.0	0.0
1,085	0.0	0.0
1,086	0.0	20.00
1,087	0.0	20.00
1,088	0.0	11.73
1,089	0.0	0.0
1,090	0.0	0.0
1,091	0.0	0.0
1,092	0.0	0.0

Record (seconds)	Percent	
	Normalized revolutions per minute	Normalized torque
1,093	0.0	0.0
1,094	0.0	0.0
1,095	0.0	0.0
1,096	0.0	0.0
1,097	0.0	0.0
1,098	0.0	0.0
1,099	0.0	0.0
1,100	0.0	0.0
1,101	0.0	0.0
1,102	0.0	0.0
1,103	0.0	0.0
1,104	0.0	0.0
1,105	0.0	0.0
1,106	0.0	0.0
1,107	0.0	0.0
1,108	0.0	0.0
1,109	0.0	0.0
1,110	0.0	0.0
1,111	0.0	0.0
1,112	0.0	0.0
1,113	0.0	0.0
1,114	0.0	0.0
1,115	0.0	0.0
1,116	0.0	73.41
1,117	0.0	90.00
1,118	31.30	81.30
1,119	41.15	90.00
1,120	44.00	90.00
1,121	46.41	90.00
1,122	51.04	82.41
1,123	66.66	80.00
1,124	75.03	90.00
1,125	89.85	90.00
1,126	96.78	93.88
1,127	96.91	50.94
1,128	94.60	17.02
1,129	99.16	28.60
1,130	100.00	39.83
1,131	100.00	30.00
1,132	100.00	26.69
1,133	100.98	20.00
1,134	100.71	20.00
1,135	100.00	36.06
1,136	96.16	40.00
1,137	95.77	30.00
1,138	94.55	32.75
1,139	96.86	35.68
1,140	99.18	30.00
1,141	100.00	44.93
1,142	101.81	50.00
1,143	86.54	([1])
1,144	63.56	([1])
1,145	56.00	([1])
1,146	46.00	([1])
1,147	41.86	45.18
1,148	38.31	78.47
1,149	35.98	80.00
1,150	31.03	80.00
1,151	25.36	80.00
1,152	23.05	60.97
1,153	18.20	27.34
1,154	12.84	43.71
1,155	10.10	68.95
1,156	3.79	68.95
1,157	1.48	44.28
1,158	0.0	0.0
1,159	0.0	0.0
1,160	0.0	0.0
1,161	0.0	0.0
1,162	0.0	0.0
1,163	0.0	0.0
1,164	0.0	0.0
1,165	0.0	24.97
1,166	0.0	17.16
1,167	0.0	6.20
1,168	0.0	10.00
1,169	0.0	10.00
1,170	0.0	0.0
1,171	0.0	0.0
1,172	0.0	0.0
1,173	0.0	0.0
1,174	0.0	0.0
1,175	0.0	0.0
1,176	0.0	0.0
1,177	0.0	0.0
1,178	0.0	0.0
1,179	0.0	0.0
1,180	0.0	0.0
1,181	0.0	0.0
1,182	0.0	0.0
1,183	0.0	0.0
1,184	0.0	0.0
1,185	0.0	0.0
1,186	0.0	0.0
1,187	0.0	0.0
1,188	0.0	0.0
1,189	0.0	0.0
1,190	0.0	0.0
1,191	0.0	0.0
1,192	0.0	0.0
1,193	0.0	0.0
1,194	0.0	0.0
1,195	0.0	0.0
1,196	0.0	0.0
1,197	0.0	0.0
1,198	0.0	0.0
1,199	0.0	0.0

[1] Closed throttle motoring.

(g) EPA US06 Driving Schedule for Light-Duty Vehicles and Light-Duty Trucks.

EPA US06 DRIVING SCHEDULE

[Speed versus Time Sequence]

Time (sec)	Speed (mph)
0	0.0
1	0.0
2	0.0
3	0.0
4	0.0
5	0.0
6	0.2
7	0.7
8	1.1
9	1.7
10	6.0
11	13.9
12	20.5
13	25.7
14	25.0
15	28.4
16	32.3
17	34.6
18	36.5
19	38.4
20	39.9
21	42.2
22	43.8

EPA US06 DRIVING SCHEDULE—Continued

[Speed versus Time Sequence]

Time (sec)	Speed (mph)
23	44.2
24	43.4
25	42.6
26	40.3
27	39.2
28	38.4
29	38.4
30	39.2
31	38.8
32	38.8
33	36.5
34	32.3
35	27.6
36	22.3
37	17.3
38	11.5
39	5.8
40	1.2
41	0.0
42	0.0
43	0.0
44	0.0
45	0.0
46	0.0
47	0.0
48	0.0
49	0.8
50	9.2
51	14.9
52	18.2
53	22.2
54	27.2
55	31.4
56	33.8
57	37.2
58	40.8
59	44.0
60	46.3
61	47.6
62	49.5
63	51.2
64	53.0
65	54.4
66	55.6
67	56.4
68	56.1
69	56.2
70	55.8
71	55.1
72	54.4
73	54.2
74	54.4
75	54.2
76	53.5
77	52.3
78	52.0
79	51.9
80	51.8
81	51.9
82	52.0
83	52.5
84	53.4
85	54.9
86	56.8
87	58.8
88	60.6
89	62.3
90	64.2
91	66.2
92	67.8

EPA US06 DRIVING SCHEDULE—Continued

[Speed versus Time Sequence]

Time (sec)	Speed (mph)
93	69.4
94	70.4
95	70.6
96	70.7
97	70.3
98	68.2
99	66.5
100	64.9
101	63.7
102	62.5
103	61.0
104	59.3
105	57.7
106	56.0
107	54.5
108	52.8
109	51.2
110	49.5
111	48.0
112	46.3
113	44.0
114	41.1
115	38.8
116	37.7
117	36.6
118	35.3
119	30.0
120	24.4
121	19.8
122	15.5
123	10.8
124	6.3
125	3.2
126	2.1
127	1.2
128	0.0
129	0.0
130	0.0
131	0.0
132	0.0
133	0.0
134	0.0
135	0.0
136	2.7
137	9.2
138	16.1
139	22.7
140	29.2
141	34.2
142	38.8
143	43.0
144	45.3
145	46.8
146	48.0
147	49.5
148	50.3
149	51.5
150	52.2
151	52.6
152	53.0
153	53.8
154	53.8
155	53.8
156	54.6
157	56.3
158	56.9
159	58.1
160	58.4
161	59.6
162	59.9

EPA US06 DRIVING SCHEDULE—Continued

[Speed versus Time Sequence]

Time (sec)	Speed (mph)
163	60.2
164	60.5
165	59.7
166	58.3
167	58.1
168	57.8
169	57.3
170	57.5
171	56.6
172	57.0
173	56.6
174	56.5
175	56.2
176	56.4
177	56.6
178	56.4
179	56.1
180	56.0
181	55.9
182	54.8
183	54.2
184	54.6
185	52.2
186	54.7
187	55.7
188	57.0
189	58.0
190	58.1
191	59.4
192	59.9
193	61.0
194	61.4
195	61.9
196	62.5
197	62.5
198	62.7
199	62.2
200	62.5
201	63.1
202	62.7
203	62.8
204	63.0
205	64.1
206	63.9
207	64.1
208	64.3
209	64.5
210	64.9
211	65.3
212	66.0
213	66.0
214	66.4
215	64.1
216	63.6
217	63.9
218	64.1
219	63.7
220	64.3
221	64.2
222	63.9
223	64.2
224	63.4
225	64.0
226	63.9
227	64.0
228	63.8
229	64.0
230	63.3
231	63.4
232	63.9

EPA US06 DRIVING SCHEDULE—Continued

[Speed versus Time Sequence]

Time (sec)	Speed (mph)
233	64.0
234	64.3
235	64.8
236	65.1
237	64.0
238	64.2
239	63.1
240	63.7
241	63.1
242	63.7
243	63.5
244	63.0
245	63.1
246	63.0
247	63.3
248	63.4
249	63.3
250	62.5
251	62.5
252	62.9
253	62.8
254	62.2
255	62.4
256	62.3
257	62.3
258	62.4
259	62.1
260	62.5
261	62.8
262	62.3
263	62.3
264	62.4
265	61.9
266	62.8
267	62.8
268	62.3
269	62.8
270	62.4
271	62.1
272	61.9
273	61.8
274	62.1
275	62.1
276	62.1
277	62.0
278	62.4
279	62.2
280	62.2
281	62.4
282	62.7
283	62.6
284	63.7
285	64.3
286	64.8
287	65.1
288	65.9
289	66.1
290	67.0
291	67.2
292	67.5
293	68.3
294	68.3
295	68.8
296	69.1
297	69.4
298	71.7
299	72.1
300	74.9
301	72.6
302	72.2

EPA US06 DRIVING SCHEDULE—Continued

[Speed versus Time Sequence]

Time (sec)	Speed (mph)
303	72.2
304	72.0
305	72.5
306	72.8
307	72.7
308	71.8
309	71.4
310	71.1
311	71.1
312	70.9
313	71.0
314	71.0
315	71.2
316	72.1
317	72.6
318	73.6
319	74.8
320	75.7
321	77.3
322	78.4
323	79.3
324	78.2
325	76.0
326	75.6
327	76.4
328	77.6
329	78.0
330	79.1
331	79.5
332	79.9
333	79.9
334	80.3
335	80.3
336	79.5
337	79.5
338	79.1
339	78.7
340	77.6
341	76.5
342	74.3
343	72.6
344	70.8
345	67.6
346	66.4
347	66.7
348	66.1
349	65.9
350	66.2
351	66.1
352	67.1
353	67.4
354	68.3
355	68.3
356	68.7
357	68.2
358	68.1
359	68.0
360	67.1
361	66.4
362	66.1
363	65.7
364	66.0
365	66.4
366	66.0
367	66.3
368	67.0
369	67.5
370	67.9
371	68.1
372	68.5

EPA US06 DRIVING SCHEDULE—Continued

[Speed versus Time Sequence]

Time (sec)	Speed (mph)
373	68.9
374	68.6
375	69.4
376	69.4
377	69.4
378	70.0
379	70.4
380	70.6
381	70.9
382	70.3
383	70.6
384	70.3
385	69.7
386	69.9
387	70.1
388	69.6
389	69.3
390	69.9
391	69.7
392	69.5
393	69.9
394	70.2
395	70.2
396	70.2
397	71.0
398	70.8
399	70.9
400	70.7
401	70.9
402	71.2
403	71.3
404	70.8
405	71.2
406	71.7
407	71.9
408	72.6
409	72.3
410	72.3
411	72.1
412	72.0
413	71.9
414	72.6
415	72.8
416	73.2
417	72.1
418	71.5
419	70.9
420	70.4
421	70.5
422	70.9
423	70.2
424	71.0
425	70.2
426	70.3
427	69.1
428	68.8
429	68.2
430	68.3
431	68.2
432	67.7
433	67.3
434	67.5
435	67.6
436	67.6
437	67.2
438	67.0
439	66.3
440	66.6
441	66.2
442	66.4

EPA US06 DRIVING SCHEDULE—Continued

[Speed versus Time Sequence]

Time (sec)	Speed (mph)
443	65.9
444	66.1
445	65.5
446	62.2
447	62.2
448	61.4
449	61.1
450	61.4
451	61.1
452	61.4
453	61.4
454	61.8
455	61.8
456	61.8
457	61.8
458	62.2
459	61.8
460	62.2
461	62.6
462	62.2
463	62.6
464	62.2
465	62.6
466	62.6
467	63.0
468	62.6
469	62.2
470	61.1
471	59.5
472	58.8
473	56.8
474	55.7
475	54.1
476	51.5
477	49.2
478	48.8
479	47.6
480	44.9
481	41.5
482	37.2
483	34.6
484	33.0
485	29.2
486	22.3
487	17.7
488	17.3
489	14.0
490	10.0
491	6.0
492	2.0
493	0.0
494	0.0
495	0.0
496	0.0
497	0.0
498	0.0
499	0.0
500	0.0
501	0.2
502	4.4
503	10.1
504	15.6
505	20.8
506	25.1
507	27.7
508	28.2
509	26.8
510	24.8
511	22.4
512	17.1

EPA US06 DRIVING SCHEDULE—Continued

[Speed versus Time Sequence]

Time (sec)	Speed (mph)
513	11.3
514	6.9
515	7.5
516	11.1
517	15.4
518	19.9
519	24.2
520	27.1
521	28.5
522	28.2
523	25.6
524	21.7
525	17.3
526	12.1
527	7.5
528	5.8
529	2.4
530	1.2
531	1.9
532	6.7
533	11.8
534	16.8
535	21.7
536	25.9
537	27.7
538	28.0
539	27.1
540	24.4
541	20.2
542	15.2
543	9.3
544	5.0
545	2.9
546	2.4
547	8.4
548	13.5
549	17.8
550	22.2
551	26.2
552	30.0
553	29.8
554	26.0
555	21.3
556	16.2
557	11.4
558	6.6
559	2.6
560	0.0
561	0.0
562	0.0
563	0.0
564	0.0
565	0.0
566	0.0
567	0.0
568	0.3
569	6.4
570	12.7
571	19.2
572	23.8
573	28.2
574	34.9
575	37.5
576	40.3
577	45.0
578	49.9
579	51.6
580	51.2
581	50.6
582	49.9

EPA US06 DRIVING SCHEDULE—Continued

[Speed versus Time Sequence]

Time (sec)	Speed (mph)
583	47.8
584	44.6
585	41.2
586	37.8
587	33.4
588	28.0
589	23.7
590	18.8
591	12.9
592	6.2
593	2.2
594	0.0
595	0.0
596	0.0
597	0.0
598	0.0
599	0.0
600	0.0

(h) EPA SC03 Driving Schedule for Light-Duty Vehicles and Light-Duty Trucks.

EPA SC03 DRIVING SCHEDULE

[Speed versus Time Sequence]

Time (sec)	Speed (mph)
0	0.0
1	0.0
2	0.0
3	0.0
4	0.0
5	0.0
6	0.0
7	0.0
8	0.0
9	0.0
10	0.0
11	0.0
12	0.0
13	0.0
14	0.0
15	0.0
16	0.0
17	0.0
18	0.0
19	0.9
20	3.0
21	2.9
22	3.3
23	3.5
24	2.2
25	1.4
26	0.0
27	0.0
28	0.0
29	0.0
30	0.0
31	0.0
32	0.0
33	0.4
34	3.3
35	6.0
36	8.0
37	8.7
38	10.0
39	12.4
40	13.8

EPA SC03 DRIVING SCHEDULE—Continued

[Speed versus Time Sequence]

Time (sec)	Speed (mph)
41	14.7
42	14.8
43	16.6
44	18.3
45	19.0
46	19.2
47	19.3
48	19.7
49	20.5
50	21.0
51	21.2
52	21.6
53	22.2
54	23.8
55	24.6
56	24.3
57	23.3
58	22.7
59	21.4
60	20.4
61	19.5
62	17.9
63	15.6
64	11.7
65	7.8
66	7.2
67	9.3
68	12.9
69	15.8
70	16.2
71	16.9
72	18.3
73	20.3
74	21.6
75	22.4
76	23.0
77	22.8
78	22.1
79	21.2
80	19.5
81	17.1
82	14.1
83	10.5
84	7.6
85	7.5
86	10.0
87	13.1
88	14.1
89	16.4
90	19.6
91	22.4
92	24.7
93	26.1
94	25.8
95	26.6
96	27.8
97	28.5
98	28.9
99	29.3
100	29.5
101	29.4
102	29.4
103	29.8
104	30.3
105	30.6
106	30.5
107	30.5
108	30.1
109	29.3
110	28.4

EPA SC03 DRIVING SCHEDULE—Continued

[Speed versus Time Sequence]

Time (sec)	Speed (mph)
111	27.6
112	26.8
113	25.5
114	23.7
115	21.7
116	19.3
117	16.7
118	14.4
119	11.5
120	7.9
121	6.6
122	9.4
123	12.4
124	14.8
125	16.1
126	19.3
127	22.6
128	25.5
129	26.4
130	26.7
131	27.8
132	29.4
133	31.1
134	32.5
135	33.6
136	34.6
137	35.4
138	36.1
139	37.0
140	37.7
141	38.1
142	38.3
143	38.1
144	37.8
145	36.6
146	34.8
147	33.2
148	32.4
149	32.3
150	32.3
151	32.4
152	32.4
153	32.4
154	32.5
155	33.3
156	34.4
157	35.5
158	36.6
159	37.4
160	38.0
161	38.4
162	38.5
163	38.6
164	38.4
165	38.2
166	37.5
167	36.9
168	36.3
169	34.8
170	33.0
171	31.4
172	30.7
173	30.3
174	30.0
175	29.3
176	27.4
177	25.1
178	21.8
179	17.2
180	12.5

EPA SC03 DRIVING SCHEDULE—Continued

[Speed versus Time Sequence]

Time (sec)	Speed (mph)
181	8.1
182	4.5
183	2.0
184	1.0
185	0.6
186	0.0
187	0.0
188	0.0
189	0.0
190	0.0
191	0.0
192	0.0
193	0.0
194	0.0
195	0.0
196	0.0
197	0.0
198	0.0
199	0.0
200	0.0
201	0.0
202	0.0
203	0.0
204	0.0
205	1.0
206	0.5
207	2.6
208	7.7
209	12.3
210	15.8
211	17.3
212	19.4
213	23.3
214	27.2
215	31.0
216	33.6
217	34.2
218	35.8
219	37.3
220	38.3
221	39.2
222	40.1
223	40.9
224	41.0
225	40.4
226	39.7
227	39.1
228	38.1
229	36.7
230	35.9
231	35.9
232	35.7
233	34.9
234	33.9
235	32.6
236	31.9
237	31.1
238	30.6
239	30.3
240	30.1
241	29.9
242	29.8
243	29.8
244	29.8
245	29.8
246	29.7
247	29.7
248	29.6
249	28.4
250	25.8

EPA SC03 DRIVING SCHEDULE—Continued

[Speed versus Time Sequence]

Time (sec)	Speed (mph)
251	22.8
252	19.0
253	14.0
254	8.6
255	4.1
256	1.3
257	0.0
258	0.0
259	0.0
260	0.0
261	0.0
262	0.0
263	0.0
264	0.0
265	0.0
266	0.0
267	0.0
268	0.0
269	0.0
270	0.0
271	0.0
272	0.0
273	0.0
274	0.0
275	0.0
276	0.0
277	0.0
278	0.0
279	0.0
280	0.0
281	0.1
282	4.5
283	9.1
284	13.6
285	18.2
286	22.6
287	26.2
288	29.3
289	32.1
290	34.5
291	36.8
292	38.4
293	40.0
294	41.2
295	41.9
296	42.2
297	42.7
298	43.0
299	43.3
300	43.5
301	43.7
302	44.3
303	45.4
304	45.9
305	46.8
306	47.6
307	48.2
308	48.6
309	48.7
310	48.6
311	49.0
312	49.8
313	50.5
314	51.2
315	52.1
316	52.7
317	53.4
318	52.4
319	54.5
320	54.8

EPA SC03 DRIVING SCHEDULE—Continued

[Speed versus Time Sequence]

Time (sec)	Speed (mph)
321	54.8
322	54.7
323	54.3
324	54.0
325	53.8
326	53.5
327	53.3
328	52.9
329	52.6
330	52.0
331	51.6
332	51.0
333	50.3
334	49.3
335	48.1
336	46.5
337	43.6
338	40.7
339	37.2
340	34.4
341	31.4
342	28.6
343	24.2
344	18.1
345	12.3
346	8.1
347	4.8
348	2.6
349	2.1
350	0.0
351	0.0
352	0.0
353	0.0
354	0.0
355	0.0
356	0.0
357	0.0
358	0.0
359	0.0
360	0.0
361	0.0
362	0.0
363	0.0
364	0.0
365	0.0
366	0.0
367	0.0
368	0.0
369	0.0
370	0.0
371	4.3
372	9.1
373	13.2
374	16.3
375	19.1
376	20.9
377	22.7
378	24.8
379	26.9
380	28.8
381	30.0
382	30.4
383	30.6
384	30.9
385	31.1
386	30.8
387	31.1
388	31.5
389	32.4
390	33.1

EPA SC03 DRIVING SCHEDULE—Continued

[Speed versus Time Sequence]

Time (sec)	Speed (mph)
391	33.3
392	33.4
393	33.7
394	34.1
395	34.7
396	35.0
397	35.4
398	35.8
399	36.0
400	36.2
401	36.3
402	36.4
403	36.5
404	36.9
405	37.2
406	37.3
407	37.8
408	38.2
409	38.6
410	38.8
411	38.6
412	38.9
413	39.0
414	38.8
415	38.6
416	38.1
417	37.6
418	37.6
419	37.3
420	37.0
421	36.6
422	36.2
423	36.0
424	36.0
425	35.5
426	34.5
427	33.0
428	31.0
429	27.5
430	22.6
431	20.0
432	19.0
433	19.4
434	19.2
435	20.6
436	22.9
437	24.6
438	25.5
439	26.9
440	27.3
441	28.2
442	29.6
443	30.2
444	30.7
445	31.3
446	31.7
447	32.2
448	32.5
449	33.0
450	33.2
451	33.3
452	33.1
453	32.7
454	32.3
455	31.9
456	31.5
457	31.2
458	30.8
459	30.5
460	30.2

EPA SC03 DRIVING SCHEDULE—Continued

[Speed versus Time Sequence]

Time (sec)	Speed (mph)
461	29.9
462	30.2
463	30.6
464	30.9
465	31.2
466	31.8
467	32.4
468	32.5
469	32.3
470	32.3
471	32.8
472	32.9
473	32.8
474	32.8
475	33.3
476	33.4
477	32.9
478	32.9
479	32.8
480	32.9
481	32.8
482	32.8
483	32.4
484	31.6
485	30.6
486	30.3
487	30.3
488	29.8
489	29.3
490	28.9
491	28.8
492	29.3
493	30.0
494	30.2
495	30.4
496	30.7
497	30.8
498	29.8
499	28.7
500	28.9
501	29.2
502	29.4
503	28.6
504	27.0
505	27.2
506	26.6
507	23.2
508	21.2
509	21.2
510	20.8
511	17.9
512	13.2
513	9.5
514	6.4
515	4.1
516	2.5
517	0.0
518	0.0
519	0.0
520	0.0
521	0.0
522	0.0
523	0.0
524	0.0
525	0.0
526	0.0
527	0.0
528	0.0
529	0.0
530	0.0

EPA SC03 DRIVING SCHEDULE—Continued

[Speed versus Time Sequence]

Time (sec)	Speed (mph)
531	0.0
532	0.0
533	0.0
534	0.0
535	0.0
536	0.0
537	0.6
538	3.3
539	5.9
540	8.9
541	10.2
542	10.4
543	9.9
544	9.9
545	10.5
546	11.3
547	12.4
548	12.8
549	14.0
550	14.6
551	15.5
552	17.0
553	17.5
554	18.1
555	18.4
556	18.5
557	18.2
558	18.5
559	18.3
560	18.2
561	17.9
562	17.7
563	17.7
564	17.3
565	17.4
566	16.8
567	17.5
568	17.7
569	17.5
570	17.6
571	17.3
572	17.4
573	17.6
574	17.6
575	17.9
576	18.0

EPA SC03 DRIVING SCHEDULE—Continued

[Speed versus Time Sequence]

Time (sec)	Speed (mph)
577	17.8
578	17.7
579	17.5
580	17.7
581	17.7
582	18.1
583	18.4
584	19.2
585	18.9
586	18.0
587	15.6
588	13.3
589	10.0
590	7.7
591	5.8
592	3.7
593	2.4
594	0.0
595	0.0
596	0.0
597	0.0
598	0.0
599	0.0
600	0.0

[42 FR 32989, June 28, 1977, as amended at 43 FR 52924, Nov. 14, 1978; 45 FR 4214, Jan. 21, 1980; 48 FR 1465, Jan. 12, 1983; 48 FR 52239, Nov. 16, 1983; 49 FR 48148, Dec. 10, 1984; 52 FR 47876, Dec. 16, 1987; 54 FR 14612, Apr. 11, 1989; 58 FR 16067, Mar. 24, 1993; 61 FR 54901, Oct. 22, 1996; 63 FR 23501, Apr. 29, 1998; 70 FR 40443, July 13, 2005; 79 FR 23737, Apr. 28, 2014; 80 FR 9111, Feb. 19, 2015; 81 FR 73999, Oct. 25, 2016]

APPENDIX II TO PART 86—TEMPERATURE SCHEDULES

(a) Ambient temperature cycle for the diurnal emission portion of the evaporative emission test (see §86.133).

TABLE I—TEMPERATURE VERSUS TIME SEQUENCE

Use linear interpolation between hourly temperatures

Time (min)	Temp. (°F)	Time (min)	Temp. (°F)	Time (min)	Temp. (°F)
0	72.0	60	72.5	120	75.5
180	80.3	240	85.2	300	89.4
360	93.1	420	95.1	480	95.8
540	96.0	600	95.5	660	94.1
720	91.7	780	88.6	840	85.5
900	82.8	960	80.9	1020	79.0
1080	77.2	1140	75.8	1200	74.7
1260	73.9	1320	73.3	1380	72.6
1440	72.0	1500	72.5	1560	75.5
1620	80.3	1680	85.2	1740	89.4
1800	93.1	1860	95.1	1920	95.8
1980	96.0	2040	95.5	2100	94.1
2160	91.7	2220	88.6	2280	85.5
2340	82.8	2400	80.9	2460	79.0
2520	77.2	2580	75.8	2640	74.7
2700	73.9	2760	73.3	2820	72.6
2880	72.0	2940	72.5	3000	75.5
3060	80.3	3120	85.2	3180	89.4

TABLE I—TEMPERATURE VERSUS TIME SEQUENCE—Continued

Use linear interpolation between hourly temperatures					
Time (min)	Temp. (°F)	Time (min)	Temp. (°F)	Time (min)	Temp. (°F)
3240	93.1	3300	95.1	3360	95.8
3420	96.0	3480	95.5	3540	94.1
3600	91.7	3660	88.6	3720	85.5
3780	82.8	3840	80.9	3900	79.0
3960	77.2	4020	75.8	4080	74.7
4140	73.9	4200	73.3	4260	72.6
4320	72.9				

[58 FR 16070, Mar. 24, 1993]

APPENDIX III TO PART 86—CONSTANT VOLUME SAMPLER FLOW CALIBRATION

The following calibration procedure outlines the equipment, the test setup configuration, and the various parameters which must be measured to establish the flow rate of the constant volume sampler pump. All the parameters related to the pump are simultaneously measured with the parameters related to a flowmeter which is connected in series with the pump. The calculated flow rate (ft^3/rev@ pump inlet absolute pressure and temperature) can then be plotted versus a correlation function which is the value of a specific combination of pump parameters. The linear equation which relates the pump flow and the correlation function is then determined. In the event that a CVS has a multiple speed drive, a calibration for each range should be performed.

This calibration procedure is based on the measurement of the absolute values of the pump and flowmeter parameters that relate the flow rate at each point. Three conditions must be maintained to assure the accuracy and integrity of the calibration curve. First, the pump pressures should be measured at taps on the pump rather than at the external piping on the pump inlet and outlet. Pressure taps that are mounted at the top and bottom center of the pump drive headplate are exposed to the actual pump cavity pressures, and therefore reflect the absolute pressure differentials. Secondly, temperature stability must be maintained during the calibration. The laminar flowmeter is sensitive to inlet temperature oscillations which cause the data points to be scattered. Gradual changes (±2 °F) in temperature are acceptable as long as they occur over a period of several minutes. Finally, all connections between the flowmeter and the CVS pump must be absolutely void of any leakage.

During a CVS emissions test the measurement of these same pump parameters enables the user to calculate the flow rate from the calibration equation.

After the calibration curve has been obtained, a verification test of the entire system can be performed by injecting a known mass of gas into the system and comparing the mass indicated by the system to the true mass injected. An indicated error does not necessarily mean that the calibration is wrong, since other factors can influence the accuracy of the system.

Equipment:

The following list of equipment will be needed to perform this calibration procedure. Figure 1 illustrates a typical equipment arrangement used for calibration. All of the equipment involved should conform to the range and accuracy as specified in Figure 1.

Equipment List:

1. LFE—Laminar Flowmeter
2. Micromanometer
3. Thermometer
4. Timer
5. U-Tube Manometers
6. Temperature Indicator with type J Thermocouples
7. A variable flow restrictor with appropriate piping to connect the CVS pump and LFE.

After the system has been connected as shown in Figure 1, set the variable restrictor in the wide open position and run the CVS pump for twenty minutes. Record the calibration data.

CALIBRATION DATA MEASUREMENTS

Parameter	Symbol	Units	Tolerance
Barometric pressure (corrected)	P_B	"Hg	±.01 "Hg.
Ambient temperature	T_A	°F	±.5 °F.
Air Temperature into LFE	ETI	°F	±.1 °F.
Pressure depression upstream of LFE	EPI	"H20	±.1"H20.
Pressure drop across the LFE matrix	EDP	"H20	±.005"H20.
Air temperature at CVS pump inlet	PTI	°F	±.5 °F.

CALIBRATION DATA MEASUREMENTS—Continued

Parameter	Symbol	Units	Tolerance
Pressure depression at CVS pump inlet	PPI	''Fluid	±.05''Fluid.
Specific gravity of manometer fluid	Sp. Gr.		
Pressure head at CVS pump outlet	PPO	''Fluid	±.05''Fluid.
Air temperature at CVS pump outlet (optional)	PTO	°F	±.5 °F.
Pump revolutions during test period	N	Revs	None.
Elapsed time for test period	t	Seconds	±.05 Seconds.

NOTE: The fluid level in the manometer tube should stabilize before the reading is made and the elapsed time for revolution counting should be greater than 120 seconds.

Reset the restrictor valve to a more restricted condition in an increment of pump inlet depression (about 4″ H_2O) that will yield a minimum of six data points for the total calibration.

Allow the system to stabilize for 3 minutes and repeat the data acquisition.

Data Analysis:

The data recorded during the calibration are to be used in the following calculations.

1. The air flow rate at each test point is calculated in standard cubic feet per minute (Qs) from the flowmeter data using the manufacturer's prescribed method.

2. The air flow rate is then converted to pump flow, Vo, in cubic feet per revolution at absolute pump inlet temperature and pressure.

$V_o = Qs/n \times T_p/530 \times 29.92/P_p$

where:

Qs = Meter air flow rate in standard cubic feet per minute (flowmeter standard conditions are 70 °F, 29.92 ''Hg).

n = Pump speed in revolutions per minute.

P_p = Absolute pump inlet pressure, in (''Hg).

$P_p = P_B - PPI$ (SP.GR./13.57), $T_p = PTI + 460$.

3. The correlation function at each test point is then calculated from the calibration data, as follows:

$$X_o = \frac{1}{n}\sqrt{\frac{\Delta P_v}{P_e}}$$

ΔP_p = The pressure differential from pump inlet to pump outlet in (''Hg).

$\Delta P_p = P_e - P_p$

P_e = Absolute pump outlet pressure, in (''Hg).

$P_p = P_B + PPO$ (Sp. Gr./13.57)

See §86.177–22 for other definitions.

4. A linear least squares fit is performed to generate the calibration equations which have the forms

$V_o = D_o - M(X_o)$

$n = A - B(P_p)$

Do, M, A, and B are the slope-intercept constants describing the lines.

A CVS system that has multiple speeds should be calibrated on each speed used. The calibration curves generated for the ranges will be approximately parallel and the intercept values, D_o, will increase as the pump flow range decreases.

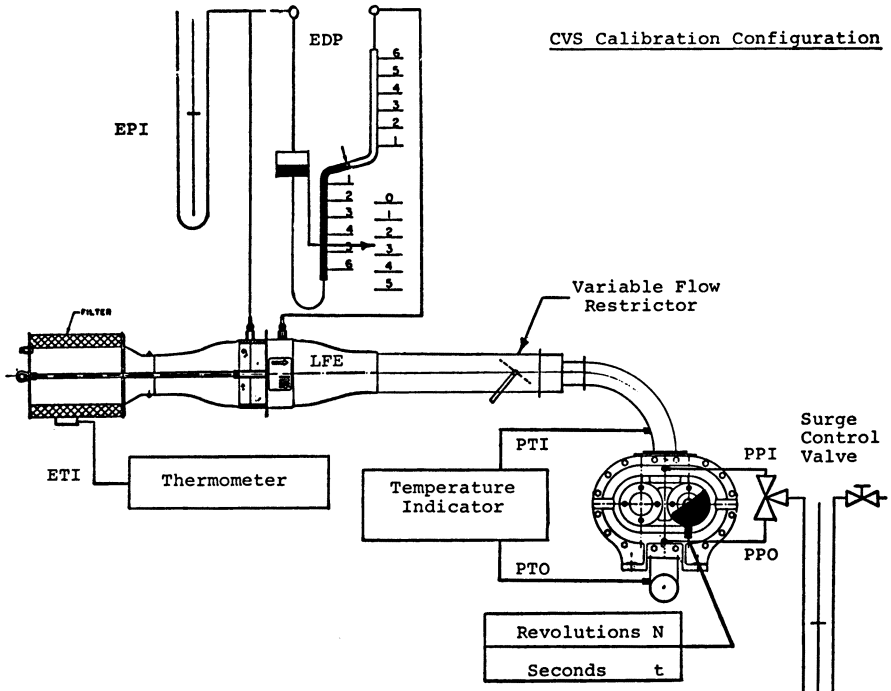

Unit		Range	Accuracy
	ETI	0-100 °F	± .1 °F
LFE	EPI	0-10 "H_2O	± .1 "H_2O
	EDP	0-10 "H_2O	± .005 "H_2O
	PTI	0-250 °F	± .5 °F
	PPI	0-36 "Fluid	± .05 "Fluid
	PPO	0-36 "Fluid	± .05 "Fluid
Pump	PTO	0-250 °F	± .5 °F
	N	0-100,000	± 0
	t	0-10,000 secs.	± .05 secs.

Note: Fluid used in 36 inch manometer should extend range to at least 0-60 "H_2O. Separate manometers for PPI and PPO may be used during calibration.

Figure I—CVS Calibration Configuration

If the calibration has been performed carefully, the calculated V_o values from the equation will be within ±.50% of the measured value of V_o. Values of M will vary from one pump to another, but values of D_o for pumps of the same make, model, and range should agree within ±3 percent of each other. Particulate influx from use will cause the pump slip to decrease as reflected by lower values for M. Calibrations should be performed at 0, 30, 100, 200, 400, etc. hours of pump operation to assure the stability of the pump slip rate. Analysis of mass injection data will also reflect pump slip stability.

CVS System Verification:

The following technique can be used to verify that the CVS and analytical instruments can accurately measure a mass of gas that has been injected into the system.

1. Obtain a small cylinder that has been charged with pure propane or carbon monoxide gas (caution—carbon monoxide is poisonous!). Critical flow orifice devices can also be used for constant flow metering.

2. Determine a reference cylinder weight to the nearest 0.01 gram.

3. Operate the CVS in the normal manner and release a quantity of pure propane or

carbon monoxide into the system during the sampling period.

4. The calculations of §86.177–22 are performed in a normal way except, in the case of propane, the density of propane (17.30 grams/cu./ft./carbon atom) is used in place of the density of exhaust hydrocarbons. In the case of carbon monoxide, the density of 32.97 grams/cu. ft. is used.

5. The gravimetric mass is subtracted from the CVS measured mass and then divided by the gravimetric mass to determine the percent accuracy of the system.

6. The cause for any discrepancy greater than ±2 percent should be found and corrected. The following list of parametric errors may assist the operator in locating the cause of large errors.

Positive Error (Indication is higher than true value):

1. Calculated V_o is greater than actual V_o.

a. Original calibration in error.

2. Pump inlet temperature recorder is reading low. A 6 °F. discrepancy will give a 1 percent error.

3. Pump inlet pressure indicator is reading high. A 3.5 in. H_2O high reading will give 1 percent error.

4. Background concentration reading is too low. Check analyzer zero. Check leakage at floor inlet.

5. Analyzer is reading high. Check span.

6. Barometer reading is in error (too high). Barometric pressure reading should be gravity and temperature corrected.

7. Revolution counter is reading high (Check pump speed and counters.)

8. Mixture is stratified causing the sample to be higher than the average concentration in the mixture. Negative Error (Indication is lower than true value):

1. Calculated V_o is less than actual V_o.

a. Original calibration in error.

b. Pump clearances decreased due to influx of some surface adherent material. Recalibration may be needed.

2. Pump inlet temperature recorder is reading high.

3. Pump inlet pressure indicator is reading low.

4. Background concentration reading is too high.

5. Analyzer is reading low.

6. Barometer reading is in error (too low).

7. Revolution counter is reading low.

8. There is a leak into the sampling system. Pressure check the lines and fittings on the intake side of sample transfer pumps on both the CVS and analyzer console.

[42 FR 33000, June 28, 1977]

APPENDIX IV TO PART 86—DURABILITY DRIVING SCHEDULES

(a) Durability Driving Schedule for Light-Duty Vehicles and Light-Duty Trucks.

The schedule consists basically of 11 laps of a 3.7 mile course. The basic vehicle speed for each lap is listed below:

Lap	Speed miles per hour
1	40
2	30
3	40
4	40
5	35
6	30
7	35
8	45
9	35
10	55
11	70

During each of the first nine laps there are 4 stops with 15 second idle. Normal accelerations and decelerations are used. In addition, there are 5 light decelerations each lap from the base speed to 20 m.p.h. followed by light accelerations to the base speed.

The 10th lap is run at a constant speed of 55 m.p.h.

The 11th lap is begun with a wide open throttle acceleration from stop to 70 m.p.h. A normal deceleration to idle followed by a second wide open throttle acceleration occurs at the midpoint of the lap.

(b) Durability Driving Schedule for Motorcycles. The Durability Driving Schedule for Class III Motorcycles may be used for Light-Duty Vehicles and Light-Duty Trucks.

The schedule consists basically of 11 laps of a 6.0 km (3.7 mi) course. The basic vehicle speed for each lap is listed below:

SPEED (KILOMETERS PER HOUR)

Lap	Class I	Class II	Class III
1	65	65	65
2	45	45	65
3	65	65	55
4	65	65	45
5	55	55	55
6	45	45	55
7	55	55	70
8	70	70	55
9	55	55	46
10	70	90	90
11	70	90	110

During each of the first nine laps there are 4 stops with 15 second idle. Normal accelerations and decelerations are used. In addition, there are 5 light declerations each lap from the base speed to 30 km/h followed by light accelerations to the base speed.

The 10th lap is run at a constant speed.

The 11th lap is begun with a wide open throttle acceleration from stop. A normal deceleration to idle followed by a second wide open throttle acceleration occurs at the midpoint of the lap.

This schedule may be modified with the advance approval of the Administrator if it results in unsafe operation of the vehicle.

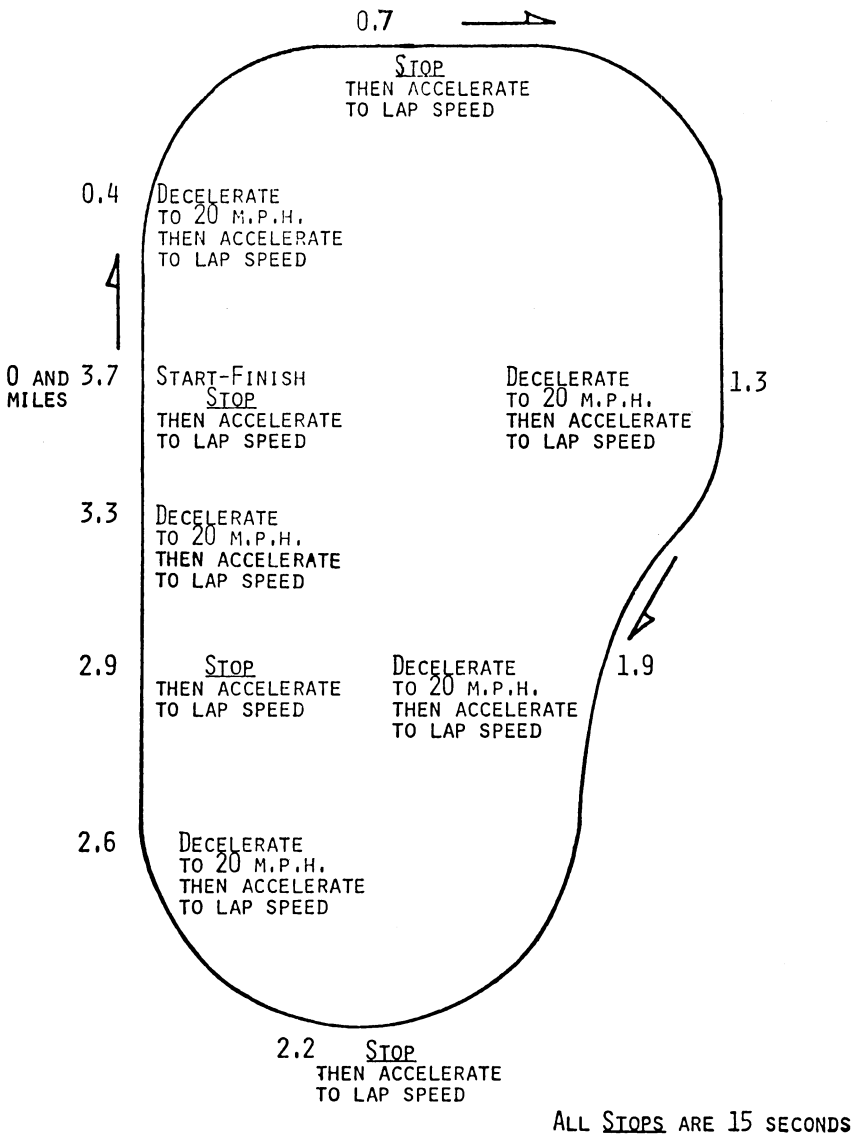

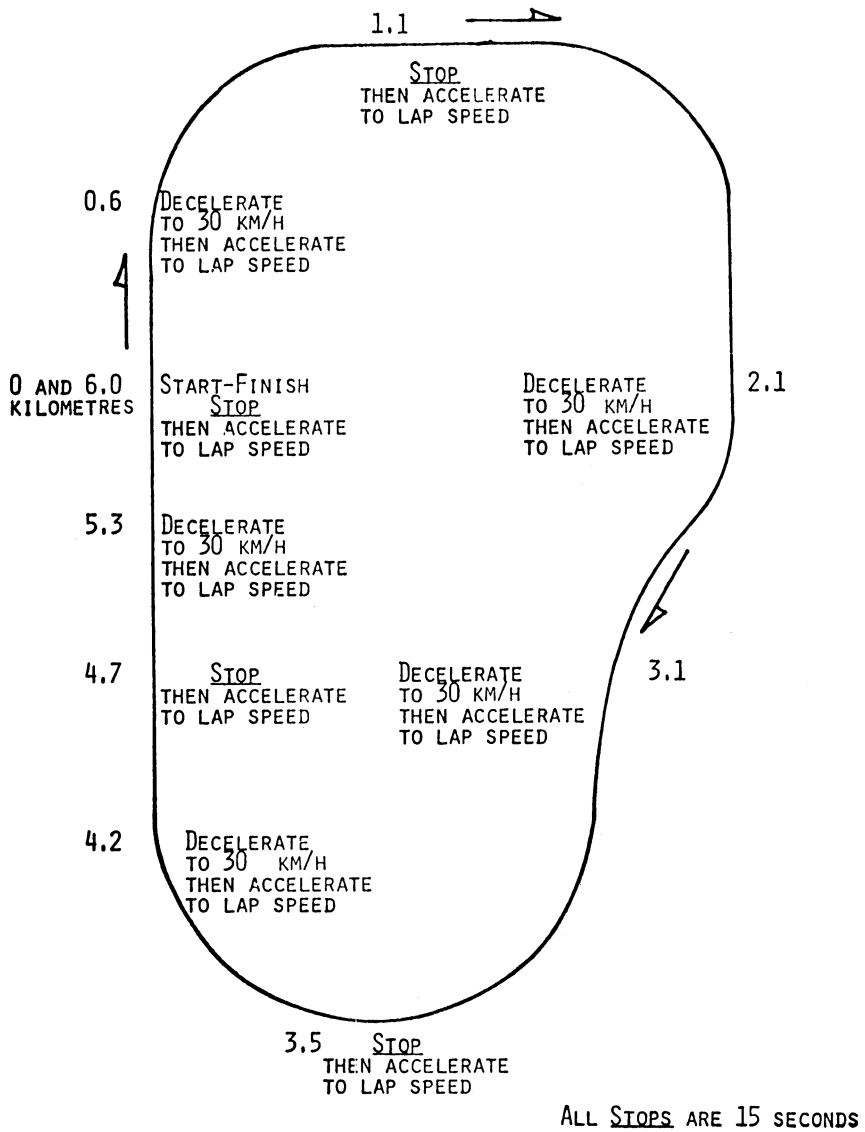

[42 FR 33002, June 28, 1977]

APPENDIX V TO PART 86—THE STANDARD ROAD CYCLE (SRC)

1. The standard road cycle (SRC) is a mileage accumulation cycle that may be used for any vehicle which is covered by the applicability provisions of §86.1801. The vehicle may be run on a track or on a mileage accumulation dynamometer.

2. The cycle consists of 7 laps of a 3.7 mile course. The length of the lap may be changed to accommodate the length of the service-accumulation track.

DESCRIPTION OF THE SRC

Lap	Description	Typical accel rate (MPH/s)
1	(start engine) Idle 10 sec	0
1	Mod accel to 30 MPH	4
1	Cruise at 30 MPH for ¼ lap	0
1	Mod. decel to 20 MPH	−5
1	Mod accel to 30 MPH	4
1	Cruise at 30 MPH for ¼ lap	0
1	Mod. decel to stop	−5
1	Idle 5 sec	0
1	Mod accel to 35 MPH	4
1	Cruise at 35 MPH for ¼ lap	0
1	Mod. decel to 25 MPH	−5
1	Mod accel to 35 MPH	4
1	Cruise at 35 MPH for ¼ lap	0
1	Mod. decel to stop	−5
2	Idle 10 sec	0
2	Mod accel to 40 MPH	3
2	Cruise at 40 MPH for ¼ lap	0
2	Mod. decel to 30 MPH	−5
2	Mod accel to 40 MPH	3
2	Cruise at 40 MPH for ¼ lap	0
2	Mod. decel to stop	−5
2	Idle 5 sec	0
2	Mod accel to 45 MPH	3
2	Cruise at 45 MPH for ¼ lap	0
2	Mod. decel to 35 MPH	−5
2	Mod accel to 45 MPH	3
2	Cruise at 45 MPH for ¼, lap	0
2	Mod. decel to stop	−5
3	Idle 10 sec	0
3	Hard accel to 55 MPH	4
3	Cruise at 55 MPH for ¼ lap	0
3	Mod. decel to 45 MPH	−5
3	Mod accel to 55 MPH	2
3	Cruise at 55 MPH for ¼ lap	0
3	Mod. decel to 45 MPH	−5
3	Mod accel to 60 MPH	2
3	Cruise at 60 MPH for ¼ lap	0
3	Mod. decel to 50 MPH	−5
3	Mod. accel to 60 MPH	2
3	Cruise at 60 MPH for ¼ lap	0
3	Mod. decel to stop	−4
4	Idle 10 sec	0
4	Hard accel to 80 MPH	3
4	Coastdown to 70 MPH	−1
4	Cruise at 70 MPH for ½ Lap	0
4	Mod. decel to 50 MPH	−3
4	Mod accel to 65 MPH	2
4	Cruise at 65 MPH for ½ lap	0
4	Mod. decel to 50 MPH	−3
5	Mod accel to 75 MPH	1
5	Cruise at 75 MPH for ½ lap	0
5	Mod. decel to 50 MPH	−3
5	Lt. accel to 70 MPH	1
5	Cruise at 70 MPH for ½ lap	0
5	Mod. decel 50 MPH	−3
6	Mod accel to 70 MPH	2
6	Coastdown to 60 MPH	−1
6	Cruise at 60 MPH for ½ lap	0
6	Mod. decel to 50 MPH	−4
6	Mod. accel to 65 MPH	1
6	Cruise at 65 MPH for ½ lap	0
6	Mod. decel to stop	−4
7	Idle 45 sec	0
7	Hard accel to 55 MPH	4
7	Cruise at 55 MPH for ¼ lap	0

DESCRIPTION OF THE SRC—Continued

Lap	Description	Typical accel rate (MPH/s)
7	Mod. decel to 40 MPH	−5
7	Mod. accel to 55 MPH	2
7	Cruise at 55 MPH for ¼ lap	0
7	Mod. decel to 40 MPH	−5
7	Mod. accel to 50 MPH	2
7	Cruise at 50 MPH for ¼ lap	0
7	Mod. decel to 40 MPH	−5
7	Mod. accel to 50 MPH	2
7	Cruise at 50 MPH for ¼ lap	0
7	Mod. decel to stop	−5

The standard road cycle is represented graphically in the following figure:

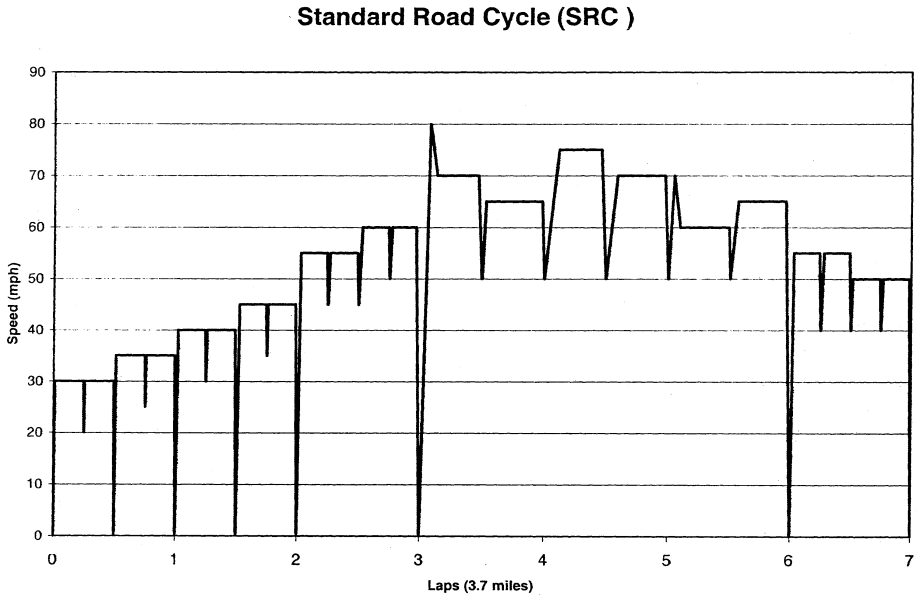

[71 FR 2837, Jan. 17, 2006]

APPENDIX VI TO PART 86—VEHICLE AND ENGINE COMPONENTS

(a) Light-Duty Vehicles, Light-Duty Trucks, Motorcycles, and Gasoline-Fueled Heavy-Duty Engines.

I. Basic Mechanical Components-Engine.

(1) Intake and exhaust valves.

(2) Drive belts.

(3) Manifold and cylinder head bolts.

(4) Engine oil and filter.

(5) Engine coolant.

(6) Cooling system hoses and connections.

(7) Vacuum fittings, hoses, and connections.

(8) Oil injection metering system.

II. Fuel System.

(1) Fuel specification-octane rating, lead content.

(2) Carburetor-idle RPM, mixture ratio.

(3) Choke mechanism.

(4) Fuel system filter and fuel system lines and connections.

(5) Choke plate and linkage.

III. Ignition Components.

(1) Ignition timing and advance systems.

(2) Distributor breaker points and condenser.
(3) Spark plugs.
(4) Ignition wiring.
(5) Operating parts of distributor.
IV. Crankcase Ventilation System.
(1) PCV valve.
(2) Ventilation hoses.
(3) Oil filter breather cap.
(4) Manifold inlet (carburetor spacer, etc.).
V. External Exhaust Emission Control System.
(1) Secondary air injection system hoses.
(2) Air system manifolds.
(3) Control valves and air pump.
(4) Manifold reactors.
(5) Catalytic converters.
(6) Exhaust recirculation.
(7) Water injection.
VI. Evaporative Emission Control System.
(1) Engine compartment hose connections.
(2) Carbon storage media.
(3) Fuel tank pressure-relief valve operation.
(4) Fuel vapor control valves.
VII. Air Inlet Components.
(1) Carburetor air cleaner filter.
(2) Hot air control valve.
(b) Diesel Light-Duty Vehicles, Diesel Light-Duty Trucks, and Diesel Heavy-Duty Engines.
I. Engine Mechanical Components.
(1) Valve train.
(2) Cooling system.
a. Coolant.
b. Thermostat.
c. Filter.
(3) Lubrication.
a. Oil filter.
b. Lubricant.
II. Fuel System.
(1) Fuel type.
(2) Fuel pump.
(3) Fuel filters.
(4) Injectors.
(5) Governor.
III. Air Inlet Components.
(1) Air cleaner.
(2) Inlet ducting.
IV. External Exhaust Emission Control System.
(1) Rack limiting devices (aneroid, throttle delay, etc.).
(2) Manifold reactors.
(3) Catalytic converters.
(4) Exhaust recirculation.
(5) Water injection.

[42 FR 33004, June 28, 1977]

APPENDIX VII TO PART 86—STANDARD BENCH CYCLE (SBC)

1. The standard bench aging durability procedures [Ref. §86.1823–08(d)] consist of aging a catalyst-oxygen-sensor system on an aging bench which follows the standard bench cycle (SBC) described in this appendix.

2. The SBC requires use of an aging bench with an engine as the source of feed gas for the catalyst.

3. The SBC is a 60-second cycle which is repeated as necessary on the aging bench to conduct aging for the required period of time. The SBC is defined based on the catalyst temperature, engine air/fuel (A/F) ratio, and the amount of secondary air injection which is added in front of the first catalyst.

CATALYST TEMPERATURE CONTROL

1. Catalyst temperature shall be measured in the catalyst bed at the location where the highest temperature occurs in the hottest catalyst. Alternatively, the feed gas temperature may be measured and converted to catalyst bed temperature using a linear transform calculated from correlation data collected on the catalyst design and aging bench to be used in the aging process.

2. Control the catalyst temperature at stoichiometric operation (01 to 40 seconds on the cycle) to a minimum of 800 °C (±10 °C) by selecting the appropriate Engine speed, load, and spark timing for the engine. Control the maximum catalyst temperature that occurs during the cycle to 890 °C (±10 °C) by selecting the appropriate A/F ratio of the engine during the ''rich'' phase described in the table below.

3. If a low control temperature other than 800 °C is utilized, the high control temperature shall be 90 °C higher than the low control temperature.

STANDARD BENCH CYCLE (SBC)

Time (seconds)	Engine air/fuel ratio	Secondary air injection
01–40	14.7 (stoichiometric, with load, spark timing, and engine speed controlled to achieve a minimum catalyst temperature of 800 °C).	None
41–45	''Rich'' (A/F ratio selected to achieve a maximum catalyst temperature over the entire cycle of 890 °C, or 90° higher than low control temperature).	None
46–55	''Rich'' (A/F ratio selected to achieve a maximum catalyst temperature over the entire cycle of 890 °C, or 90° higher than low control temperature).	3% (±0.1%)
56–60	14.7 (stoichiometric, same load, spark timing, and engine speed as used in the 01–40 sec period of the cycle).	3% (±0.1%)

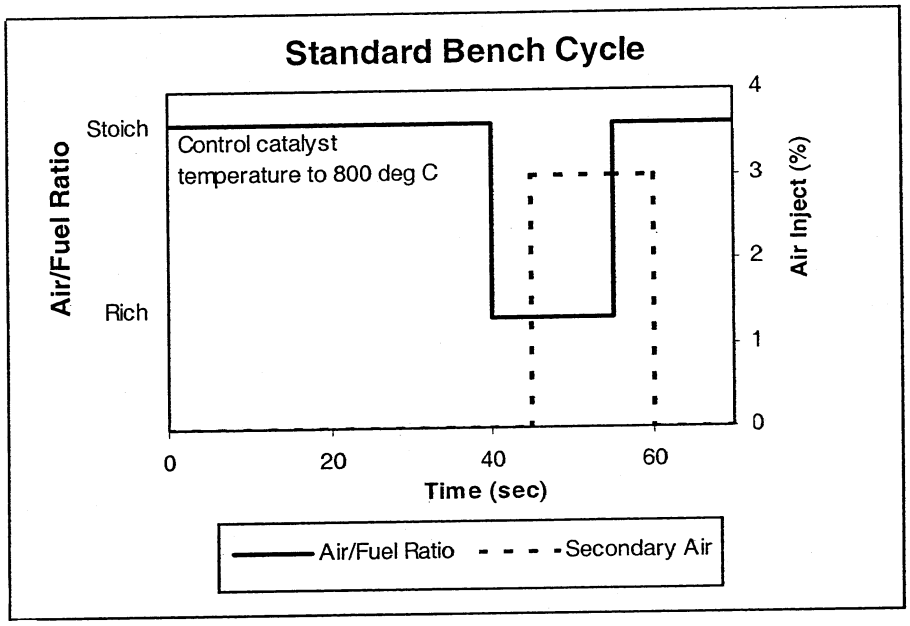

[71 FR 2837, Jan. 17, 2006]

APPENDIX VIII TO PART 86—AGING BENCH EQUIPMENT AND PROCEDURES

This appendix provides specifications for standard aging bench equipment and aging procedures which may be used to conduct bench aging durability under the provisions of §86.1823–08.

1. Aging Bench Configuration

The aging bench must provide the appropriate exhaust flow rate, temperature, air-fuel ratio, exhaust constituents and secondary air injection at the inlet face of the catalyst.

a. The EPA standard aging bench consists of an engine, engine controller, and engine dynamometer. Other configurations may be acceptable (e.g. whole vehicle on a dynamometer, or a burner that provides the correct exhaust conditions), as long as the catalyst inlet conditions and control features specified in this appendix are met.

b. A single aging bench may have the exhaust flow split into several streams providing that each exhaust stream meets the requirements of this appendix. If the bench has more than one exhaust stream, multiple catalyst systems may be aged simultaneously.

2. Fuel and Oil

The fuel used by the engine shall comply with the mileage accumulation fuel provisions of §86.113 for the applicable fuel type (e.g., gasoline or diesel fuel). The oil used in the engine shall be representative of commercial oils and selected using good engineering judgement.

3. Exhaust System Installation

a. The entire catalyst(s)-plus-oxygen-sensor(s) system, together with all exhaust piping which connects these components, [the ''catalyst system''] will be installed on the bench. For engines with multiple exhaust streams (such as some V6 and V8 engines), each bank of the exhaust system will be installed separately on the bench.

b. For exhaust systems that contain multiple in-line catalysts, the entire catalyst system including all catalysts, all oxygen sensors and the associated exhaust piping will be installed as a unit for aging. Alternatively, each individual catalyst may be separately aged for the appropriate period of time.

4. Temperature Measurement

Catalyst temperature shall be measured using a thermocouple placed in the catalyst

bed at the location where the highest temperature occurs in the hottest catalyst (typically this occurs approximately one-inch behind the front face of the first catalyst at its longitudinal axis). Alternatively, the feed gas temperature just before the catalyst inlet face may be measured and converted to catalyst bed temperature using a linear transform calculated from correlation data collected on the catalyst design and aging bench to be used in the aging process. The catalyst temperature must be stored digitally at the speed of 1 hertz (one measurement per second).

5. Air/Fuel Measurement

Provisions must be made for the measurement of the air/fuel (A/F) ratio (such as a wide-range oxygen sensor) as close as possible to the catalyst inlet and outlet flanges. The information from these sensors must be stored digitally at the speed of 1 hertz (one measurement per second).

6. Exhaust Flow Balance

Provisions must be made to assure that the proper amount of exhaust (measured in grams/second at stoichiometry, with a tolerance of ±5 grams/second) flows through each catalyst system that is being aged on the bench. The proper flow rate is determined based upon the exhaust flow that would occur in the original vehicle's engine at the steady state engine speed and load selected for the bench aging in paragraph (7).

7. Setup

a. The engine speed, load, and spark timing are selected to achieve a catalyst bed temperature of 800 °C (±10 °C) at steady-state stoichiometric operation.

b. The air injection system is set to provide the necessary air flow to produce 3.0% oxygen (±0.1%) in the steady-state stoichiometric exhaust stream just in front of the first catalyst. A typical reading at the upstream A/F measurement point (required in paragraph 5) is lambda 1.16 (which is approximately 3% oxygen).

c. With the air injection on, set the ''Rich'' A/F ratio to produce a catalyst bed temperature of 890 °C (±10 °C). A typical A/F value for this step is lambda 0.94 (approximately 2% CO).

8. Aging Cycle

The standard bench aging procedures use the standard bench cycle (SBC) which is described in appendix VII to part 86. The SBC is repeated until the amount of aging calculated from the bench aging time (BAT) equation [ref. §86.1823–08 (d)(3)] is achieved.

9. Quality Assurance

a. The temperatures and A/F ratio information that is required to be measured in paragraphs (4) and (5) shall be reviewed periodically (at least every 50 hours) during aging. Necessary adjustments shall be made to assure that the SBC is being appropriately followed throughout the aging process.

b. After the aging has been completed, the catalyst time-at-temperature collected during the aging process shall be tabulated into a histogram with temperature bins of no larger than 10 °C. The BAT equation and the calculated effective reference temperature for the aging cycle [ref. §86.1823–08(d)] will be used to determine if the appropriate amount of thermal aging of the catalyst has in fact occurred. Bench aging will be extended if the thermal effect of the calculated aging time is not at least 95% of the target thermal aging.

10. Startup and Shutdown

Care should be taken to assure that the maximum catalyst temperature for rapid deterioration (e.g., 1050 °C) does not occur during startup or shutdown. Special low temperature startup and shutdown procedures may be used to alleviate this concern.

[71 FR 2837, Jan. 17, 2006]

APPENDIX IX TO PART 86—EXPERIMENTALLY DETERMINING THE R-FACTOR FOR BENCH AGING DURABILITY PROCEDURES

The R-Factor is the catalyst thermal reactivity coefficient used in the bench aging time (BAT) equation [Ref. §86.1826–08(d)(3)]. Manufacturers may determine the value of R experimentally using the following procedures.

1. Using the applicable bench cycle and aging bench hardware, age several catalysts (minimum of 3 of the same catalyst design) at different control temperatures between the normal operating temperature and the damage limit temperature. Measure emissions (or catalyst inefficiency (1-catalyst efficiency)) for each constituent. Assure that the final testing yields data between one- and two-times the standard.

2. Estimate the value of R and calculate the effective reference temperature (T_r) for the bench aging cycle for each control temperature according to the procedure described in §86.1826–08(d)(4).

3. Plot emissions (or catalyst inefficiency) versus aging time for each catalyst. Calculate the least-squared best-fit line through the data. For the data set to be useful for this purpose the data should have an approximately common intercept between 0 and 4000 miles. See the following graph for an example.

4. Calculate the slope of the best-fit line for each aging temperature.

5. Plot the natural log (ln) of the slope of each best-fit line (determined in step 4)

along the vertical axis, versus the inverse of aging temperature (1/(aging temperature, deg K)) along the horizontal axis, Calculate the least-squared best-fit lines through the data. The slope of the line is the R-factor. See the following graph for an example.

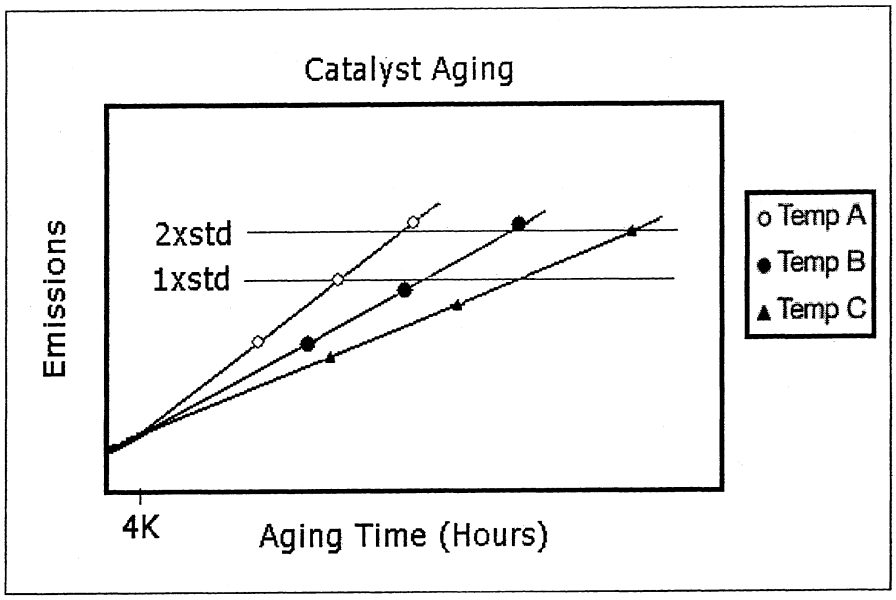

6. Compare the R-factor to the initial value that was used in Step 2. If the calculated R-factor differs from the initial value by more than 5%, choose a new R-factor that is between the initial and calculated values, then repeat Steps 2–6 to derive a new R-factor. Repeat this process until the calculated R-factor is within 5% of the initially assumed R-factor.

7. Compare the R-factor determined separately for each constituent. Use the lowest R-factor (worst case) for the BAT equation.

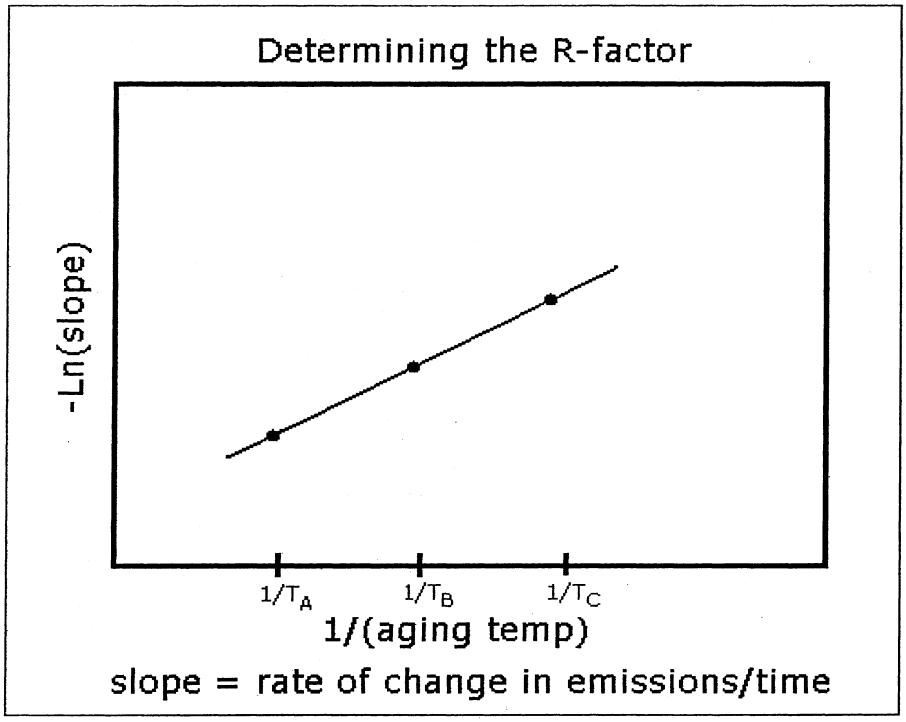

[71 FR 2837, Jan. 17, 2006]

APPENDIX X TO PART 86—SAMPLING PLANS FOR SELECTIVE ENFORCEMENT AUDITING OF HEAVY-DUTY ENGINES AND LIGHT-DUTY TRUCKS

TABLE 1—SAMPLING PLAN CODE LETTER

Annual sales	Code letter
50–99	A.
100–299	B.
300–499	C.
500 or greater	D.

TABLE 2—SAMPLING PLAN FOR CODE LETTER "A"

[Sample inspection criteria]

Stage	Pass No.	Fail No.	Stage	Pass No.	Fail No.
1	(1)	(2)	16	6	11
2	(1)	(2)	17	7	12
3	(1)	(2)	18	7	12
4	0	(2)	19	8	13
5	0	(2)	20	8	13
6	1	6	21	9	14

TABLE 2—SAMPLING PLAN FOR CODE LETTER "A"—Continued

[Sample inspection criteria]

Stage	Pass No.	Fail No.	Stage	Pass No.	Fail No.
7	1	7	22	10	14
8	2	7	23	10	15
9	2	8	24	11	15
10	3	8	25	11	16
11	3	8	26	12	16
12	4	9	27	12	17
13	5	10	28	13	17
14	5	10	29	14	17
15	6	11	30	16	17

[1] Test sample passing not permitted at this stage.
[2] Test sample failure not permitted at this stage.

TABLE 3—SAMPLING PLAN FOR CODE LETTER "B"

[Sample Inspection Criteria]

Stage	Pass No.	Fail No.
1	(1)	(2)
2	(1)	(2)
3	(1)	(2)
4	(1)	(2)
5	0	(2)
6	1	6

TABLE 3—SAMPLING PLAN FOR CODE LETTER "B"—Continued

[Sample Inspection Criteria]

Stage	Pass No.	Fail No.
7	1	7
8	2	7
9	2	8
10	3	8
11	3	9
12	4	9
13	4	10
14	5	10
15	5	11
16	6	12
17	6	12
18	7	13
19	8	13
20	8	14
21	9	14
22	9	15
23	10	15
24	10	16
25	11	16
26	11	17
27	12	17
28	12	18
29	13	18
30	13	19
31	14	19
32	14	20
33	15	20
34	16	21
35	16	21
36	17	22
37	17	22
38	18	22
39	18	22
40	21	22

[1] Test sample passing not permitted at this stage.
[2] Test sample failure not permitted at this stage.

TABLE 4—SAMPLING PLAN FOR CODE LETTER "C"

[Sample Inspection Criteria]

Stage	Pass No.	Fail No.
1	[1]	[2]
2	[1]	[2]
3	[1]	[2]
4	[1]	[2]
5	0	[2]
6	0	6
7	1	7
8	2	7
9	2	8
10	3	9
11	3	9
12	4	10
13	4	10
14	5	11
15	5	11
16	6	12
17	6	12
18	7	13
19	7	13
20	8	14
21	8	14
22	9	15
23	10	15
24	10	16
25	11	16

TABLE 4—SAMPLING PLAN FOR CODE LETTER "C"—Continued

[Sample Inspection Criteria]

Stage	Pass No.	Fail No.
26	11	17
27	12	17
28	12	18
29	13	18
30	13	19
31	14	19
32	14	20
33	15	20
34	15	21
35	16	21
36	16	22
37	17	22
38	18	23
39	18	23
40	19	24
41	19	24
42	20	25
43	20	25
44	21	26
45	21	27
46	22	27
47	22	27
48	23	27
49	23	27
50	26	27

[1] Test sample passing not permitted at this stage.
[2] Test sample failure not permitted at this stage.

TABLE 5—SAMPLING PLAN FOR CODE LETTER "D"

[Sample Inspection Criteria]

Stage	Pass No.	Fail No.
1	([1])	([2])
2	([1])	([2])
3	([1])	([2])
4	([1])	([2])
5	0	([2])
6	0	6
7	1	7
8	2	8
9	2	8
10	3	9
11	3	9
12	4	10
13	4	10
14	5	11
15	5	11
16	6	12
17	6	12
18	7	13
19	7	13
20	8	14
21	8	14
22	9	15
23	9	15
24	10	16
25	11	16
26	11	17
27	12	17
28	12	18
29	13	19
30	13	19
31	14	20
32	14	20
33	15	21
34	15	21

TABLE 5—SAMPLING PLAN FOR CODE LETTER "D"—Continued

[Sample Inspection Criteria]

Stage	Pass No.	Fail No.
35	16	22
36	16	22
37	17	23
38	17	23
39	18	24
40	18	24
41	19	25
42	19	26
43	20	26
44	21	27
45	21	27
46	22	28
47	22	28
48	23	29
49	23	29
50	24	30
51	24	30
52	25	31
53	25	31
54	26	32
55	26	32
56	27	33
57	27	33
58	28	33
59	28	33
60	32	33

[1] Test sample passing not permitted at this stage.
[2] Test sample failure not permitted at this stage.

[48 FR 1414, Jan. 12, 1983, as amended at 48 FR 52209, Nov. 16, 1983]

APPENDIX XI TO PART 86—SAMPLING PLANS FOR SELECTIVE ENFORCEMENT AUDITING OF LIGHT-DUTY VEHICLES

40% AQL

TABLE 1—SAMPLING PLAN CODE LETTER

Annual sales of configuration	Code letter
50–99	A
100–299	B
300–499	C
500 or greater	D

TABLE 2—SAMPLING PLAN FOR CODE LETTER "A" 40% AQL

[Sample inspection criteria]

Stage	Pass No.	Fail No.
1	([1])	([2])
2	([1])	([2])
3	([1])	([2])
4	0	([2])
5	0	([2])
6	1	6
7	1	7
8	2	7
9	2	8
10	3	8
11	3	9
12	4	9

TABLE 2—SAMPLING PLAN FOR CODE LETTER "A" 40% AQL—Continued

[Sample inspection criteria]

Stage	Pass No.	Fail No.
13	5	10
14	5	10
15	6	11
16	6	11
17	7	12
18	7	12
19	8	13
20	8	13
21	9	14
22	10	14
23	10	15
24	11	15
25	11	16
26	12	16
27	12	17
28	13	17
29	14	17
30	16	17

[1] Test sample passing not permitted at this stage.
[2] Test sample failure not permitted at this stage.

TABLE 3—SAMPLING PLAN FOR CODE LETTER "B" 40% AQL

[Sample inspection criteria]

Stage	Pass No.	Fail No.
1	([1])	([2])
2	([1])	([2])
3	([1])	([2])
4	([1])	([2])
5	0	([2])
6	1	6
7	1	7
8	2	7
9	2	8
10	3	8
11	3	9
12	4	9
13	4	10
14	5	10
15	5	11
16	6	12
17	6	12
18	7	13
19	8	13
20	8	14
21	9	14
22	9	15
23	10	15
24	10	16
25	11	16
26	11	17
27	12	17
28	12	18
29	13	18
30	13	19
31	14	19
32	14	20
33	15	20
34	16	21
35	16	21
36	17	22
37	17	22
38	18	22
39	18	22
40	21	22

[1] Test sample passing not permitted at this stage.

[2] Test sample failure not permitted at this stage.

TABLE 4—SAMPLING PLAN FOR CODE LETTER "C" 40% AQL

[Sample inspection criteria]

Stage	Pass No.	Fail No.
1	(1)	(2)
2	(1)	(2)
3	(1)	(2)
4	(1)	(2)
5	0	(2)
6	0	6
7	1	7
8	2	7
9	2	8
10	3	9
11	3	9
12	4	10
13	4	10
14	5	11
15	5	11
16	6	12
17	6	12
18	7	13
19	7	13
20	8	14
21	8	14
22	9	15
23	10	15
24	10	16
25	11	16
26	11	17
27	12	17
28	12	18
29	13	18
30	13	19
31	14	19
32	14	20
33	15	20
34	15	21
35	16	21
36	16	22
37	17	22
38	18	23
39	18	23
40	19	24
41	19	24
42	20	25
43	20	25
44	21	26
45	21	27
46	22	27
47	22	27
48	23	27
49	23	27
50	26	27

[1] Test sample passing not permitted at this stage.
[2] Test sample failure not permitted at this stage.

TABLE 5—SAMPLING PLAN FOR CODE LETTER "D" 40% AQL

[Sample inspection criteria]

Stage	Pass No.	Fail No.
1	(1)	(2)
2	(1)	(2)
3	(1)	(2)
4	(1)	(2)

TABLE 5—SAMPLING PLAN FOR CODE LETTER "D" 40% AQL—Continued

[Sample inspection criteria]

Stage	Pass No.	Fail No.
5	0	(2)
6	0	6
7	1	7
8	2	8
9	2	8
10	3	9
11	3	9
12	4	10
13	4	10
14	5	11
15	5	11
16	6	12
17	6	12
18	7	13
19	7	13
20	8	14
21	8	14
22	9	15
23	9	15
24	10	16
25	11	16
26	11	17
27	12	17
28	12	18
29	13	19
30	13	19
31	14	20
32	14	20
33	15	21
34	15	21
35	16	22
36	16	22
37	17	23
38	17	23
39	18	24
40	18	24
41	19	25
42	19	26
43	20	26
44	21	27
45	21	27
46	22	28
47	22	28
48	23	29
49	23	29
50	24	30
51	24	30
52	25	31
53	25	31
54	26	32
55	26	32
56	27	33
57	27	33
58	28	33
59	28	33
60	32	33

[1] Test sample passing not permitted at this stage.
[2] Test sample failure not permitted at this stage.

[49 FR 48485, Dec. 12, 1984]

APPENDIX XII TO PART 86—TABLES FOR PRODUCTION COMPLIANCE AUDITING OF HEAVY-DUTY ENGINES AND HEAVY-DUTY VEHICLES, INCLUDING LIGHT-DUTY TRUCKS

TABLE 1—COMPLIANCE LEVEL DETERMINATION USING THE PRIMARY PCA SAMPLING PLAN

	Compliance level[2]
PCA test sample size.[1]	
24	15
25	15
26	16
27	17
28	17
29	18
30	18
31	19
32	20
33	20
34	21
35	21
36	22
37	23
38	23
39	24
40	24
41	25
42	26
43	26
44	27
45	27
46	28
47	29
48	29
49	30
50	30
51	31
52	32
53	32
54	33
55	33
56	34
57	35
58	35
59	36
60	36

[1] Including the number of SEA tests if applicable.

[2] Is the test result of the sequence number: (The lowest test result is sequence No. 1).

TABLE 2—VALUES OF K FOR THE REDUCED FIXED PCA SAMPLING PLAN

	Value of K
Sample size:	
3	1.602
4	1.114
5	0.895
6	0.764
7	0.674
8	0.608
9	0.555
10	0.513
11	0.478
12	0.448
13	0.422
14	0.399
15	0.379
16	0.360
17	0.343
18	0.328
19	0.314
20	0.301
21	0.289
22	0.277
23	0.266

TABLE 3—VALUES OF K FOR THE REDUCED SEQUENTIAL PCA SAMPLING PLAN

	Value of K
Sample size:	
4	1.671
8	0.912
12	0.672
16	0.540
20	0.451

[50 FR 35401, Aug. 30, 1985]

FINDING AIDS

A list of CFR titles, subtitles, chapters, subchapters and parts and an alphabetical list of agencies publishing in the CFR are included in the CFR Index and Finding Aids volume to the Code of Federal Regulations which is published separately and revised annually.

Table of CFR Titles and Chapters
Alphabetical List of Agencies Appearing in the CFR
List of CFR Sections Affected

Table of CFR Titles and Chapters

(Revised as of July 1, 2020)

Title 1—General Provisions

I Administrative Committee of the Federal Register (Parts 1—49)
II Office of the Federal Register (Parts 50—299)
III Administrative Conference of the United States (Parts 300—399)
IV Miscellaneous Agencies (Parts 400—599)
VI National Capital Planning Commission (Parts 600—699)

Title 2—Grants and Agreements

SUBTITLE A—OFFICE OF MANAGEMENT AND BUDGET GUIDANCE FOR GRANTS AND AGREEMENTS
I Office of Management and Budget Governmentwide Guidance for Grants and Agreements (Parts 2—199)
II Office of Management and Budget Guidance (Parts 200—299)
SUBTITLE B—FEDERAL AGENCY REGULATIONS FOR GRANTS AND AGREEMENTS
III Department of Health and Human Services (Parts 300—399)
IV Department of Agriculture (Parts 400—499)
VI Department of State (Parts 600—699)
VII Agency for International Development (Parts 700—799)
VIII Department of Veterans Affairs (Parts 800—899)
IX Department of Energy (Parts 900—999)
X Department of the Treasury (Parts 1000—1099)
XI Department of Defense (Parts 1100—1199)
XII Department of Transportation (Parts 1200—1299)
XIII Department of Commerce (Parts 1300—1399)
XIV Department of the Interior (Parts 1400—1499)
XV Environmental Protection Agency (Parts 1500—1599)
XVIII National Aeronautics and Space Administration (Parts 1800—1899)
XX United States Nuclear Regulatory Commission (Parts 2000—2099)
XXII Corporation for National and Community Service (Parts 2200—2299)
XXIII Social Security Administration (Parts 2300—2399)
XXIV Department of Housing and Urban Development (Parts 2400—2499)
XXV National Science Foundation (Parts 2500—2599)
XXVI National Archives and Records Administration (Parts 2600—2699)

Title 2—Grants and Agreements—Continued

Chap.	
XXVII	Small Business Administration (Parts 2700—2799)
XXVIII	Department of Justice (Parts 2800—2899)
XXIX	Department of Labor (Parts 2900—2999)
XXX	Department of Homeland Security (Parts 3000—3099)
XXXI	Institute of Museum and Library Services (Parts 3100—3199)
XXXII	National Endowment for the Arts (Parts 3200—3299)
XXXIII	National Endowment for the Humanities (Parts 3300—3399)
XXXIV	Department of Education (Parts 3400—3499)
XXXV	Export-Import Bank of the United States (Parts 3500—3599)
XXXVI	Office of National Drug Control Policy, Executive Office of the President (Parts 3600—3699)
XXXVII	Peace Corps (Parts 3700—3799)
LVIII	Election Assistance Commission (Parts 5800—5899)
LIX	Gulf Coast Ecosystem Restoration Council (Parts 5900—5999)

Title 3—The President

I	Executive Office of the President (Parts 100—199)

Title 4—Accounts

I	Government Accountability Office (Parts 1—199)

Title 5—Administrative Personnel

I	Office of Personnel Management (Parts 1—1199)
II	Merit Systems Protection Board (Parts 1200—1299)
III	Office of Management and Budget (Parts 1300—1399)
IV	Office of Personnel Management and Office of the Director of National Intelligence (Parts 1400—1499)
V	The International Organizations Employees Loyalty Board (Parts 1500—1599)
VI	Federal Retirement Thrift Investment Board (Parts 1600—1699)
VIII	Office of Special Counsel (Parts 1800—1899)
IX	Appalachian Regional Commission (Parts 1900—1999)
XI	Armed Forces Retirement Home (Parts 2100—2199)
XIV	Federal Labor Relations Authority, General Counsel of the Federal Labor Relations Authority and Federal Service Impasses Panel (Parts 2400—2499)
XVI	Office of Government Ethics (Parts 2600—2699)
XXI	Department of the Treasury (Parts 3100—3199)
XXII	Federal Deposit Insurance Corporation (Parts 3200—3299)
XXIII	Department of Energy (Parts 3300—3399)
XXIV	Federal Energy Regulatory Commission (Parts 3400—3499)
XXV	Department of the Interior (Parts 3500—3599)
XXVI	Department of Defense (Parts 3600—3699)

Title 5—Administrative Personnel—Continued

Chap.	
XXVIII	Department of Justice (Parts 3800—3899)
XXIX	Federal Communications Commission (Parts 3900—3999)
XXX	Farm Credit System Insurance Corporation (Parts 4000—4099)
XXXI	Farm Credit Administration (Parts 4100—4199)
XXXIII	U.S. International Development Finance Corporation (Parts 4300—4399)
XXXIV	Securities and Exchange Commission (Parts 4400—4499)
XXXV	Office of Personnel Management (Parts 4500—4599)
XXXVI	Department of Homeland Security (Parts 4600—4699)
XXXVII	Federal Election Commission (Parts 4700—4799)
XL	Interstate Commerce Commission (Parts 5000—5099)
XLI	Commodity Futures Trading Commission (Parts 5100—5199)
XLII	Department of Labor (Parts 5200—5299)
XLIII	National Science Foundation (Parts 5300—5399)
XLV	Department of Health and Human Services (Parts 5500—5599)
XLVI	Postal Rate Commission (Parts 5600—5699)
XLVII	Federal Trade Commission (Parts 5700—5799)
XLVIII	Nuclear Regulatory Commission (Parts 5800—5899)
XLIX	Federal Labor Relations Authority (Parts 5900—5999)
L	Department of Transportation (Parts 6000—6099)
LII	Export-Import Bank of the United States (Parts 6200—6299)
LIII	Department of Education (Parts 6300—6399)
LIV	Environmental Protection Agency (Parts 6400—6499)
LV	National Endowment for the Arts (Parts 6500—6599)
LVI	National Endowment for the Humanities (Parts 6600—6699)
LVII	General Services Administration (Parts 6700—6799)
LVIII	Board of Governors of the Federal Reserve System (Parts 6800—6899)
LIX	National Aeronautics and Space Administration (Parts 6900—6999)
LX	United States Postal Service (Parts 7000—7099)
LXI	National Labor Relations Board (Parts 7100—7199)
LXII	Equal Employment Opportunity Commission (Parts 7200—7299)
LXIII	Inter-American Foundation (Parts 7300—7399)
LXIV	Merit Systems Protection Board (Parts 7400—7499)
LXV	Department of Housing and Urban Development (Parts 7500—7599)
LXVI	National Archives and Records Administration (Parts 7600—7699)
LXVII	Institute of Museum and Library Services (Parts 7700—7799)
LXVIII	Commission on Civil Rights (Parts 7800—7899)
LXIX	Tennessee Valley Authority (Parts 7900—7999)
LXX	Court Services and Offender Supervision Agency for the District of Columbia (Parts 8000—8099)
LXXI	Consumer Product Safety Commission (Parts 8100—8199)
LXXIII	Department of Agriculture (Parts 8300—8399)

Title 5—Administrative Personnel—Continued

Chap.

LXXIV Federal Mine Safety and Health Review Commission (Parts 8400—8499)

LXXVI Federal Retirement Thrift Investment Board (Parts 8600—8699)

LXXVII Office of Management and Budget (Parts 8700—8799)

LXXX Federal Housing Finance Agency (Parts 9000—9099)

LXXXIII Special Inspector General for Afghanistan Reconstruction (Parts 9300—9399)

LXXXIV Bureau of Consumer Financial Protection (Parts 9400—9499)

LXXXVI National Credit Union Administration (Parts 9600—9699)

XCVII Department of Homeland Security Human Resources Management System (Department of Homeland Security—Office of Personnel Management) (Parts 9700—9799)

XCVIII Council of the Inspectors General on Integrity and Efficiency (Parts 9800—9899)

XCIX Military Compensation and Retirement Modernization Commission (Parts 9900—9999)

C National Council on Disability (Parts 10000—10049)

CI National Mediation Board (Part 10101)

Title 6—Domestic Security

I Department of Homeland Security, Office of the Secretary (Parts 1—199)

X Privacy and Civil Liberties Oversight Board (Parts 1000—1099)

Title 7—Agriculture

SUBTITLE A—OFFICE OF THE SECRETARY OF AGRICULTURE (PARTS 0—26)

SUBTITLE B—REGULATIONS OF THE DEPARTMENT OF AGRICULTURE

I Agricultural Marketing Service (Standards, Inspections, Marketing Practices), Department of Agriculture (Parts 27—209)

II Food and Nutrition Service, Department of Agriculture (Parts 210—299)

III Animal and Plant Health Inspection Service, Department of Agriculture (Parts 300—399)

IV Federal Crop Insurance Corporation, Department of Agriculture (Parts 400—499)

V Agricultural Research Service, Department of Agriculture (Parts 500—599)

VI Natural Resources Conservation Service, Department of Agriculture (Parts 600—699)

VII Farm Service Agency, Department of Agriculture (Parts 700—799)

VIII Agricultural Marketing Service (Federal Grain Inspection Service, Fair Trade Practices Program), Department of Agriculture (Parts 800—899)

Title 7—Agriculture—Continued

Chap.	
IX	Agricultural Marketing Service (Marketing Agreements and Orders; Fruits, Vegetables, Nuts), Department of Agriculture (Parts 900—999)
X	Agricultural Marketing Service (Marketing Agreements and Orders; Milk), Department of Agriculture (Parts 1000—1199)
XI	Agricultural Marketing Service (Marketing Agreements and Orders; Miscellaneous Commodities), Department of Agriculture (Parts 1200—1299)
XIV	Commodity Credit Corporation, Department of Agriculture (Parts 1400—1499)
XV	Foreign Agricultural Service, Department of Agriculture (Parts 1500—1599)
XVI	[Reserved]
XVII	Rural Utilities Service, Department of Agriculture (Parts 1700—1799)
XVIII	Rural Housing Service, Rural Business-Cooperative Service, Rural Utilities Service, and Farm Service Agency, Department of Agriculture (Parts 1800—2099)
XX	[Reserved]
XXV	Office of Advocacy and Outreach, Department of Agriculture (Parts 2500—2599)
XXVI	Office of Inspector General, Department of Agriculture (Parts 2600—2699)
XXVII	Office of Information Resources Management, Department of Agriculture (Parts 2700—2799)
XXVIII	Office of Operations, Department of Agriculture (Parts 2800—2899)
XXIX	Office of Energy Policy and New Uses, Department of Agriculture (Parts 2900—2999)
XXX	Office of the Chief Financial Officer, Department of Agriculture (Parts 3000—3099)
XXXI	Office of Environmental Quality, Department of Agriculture (Parts 3100—3199)
XXXII	Office of Procurement and Property Management, Department of Agriculture (Parts 3200—3299)
XXXIII	Office of Transportation, Department of Agriculture (Parts 3300—3399)
XXXIV	National Institute of Food and Agriculture (Parts 3400—3499)
XXXV	Rural Housing Service, Department of Agriculture (Parts 3500—3599)
XXXVI	National Agricultural Statistics Service, Department of Agriculture (Parts 3600—3699)
XXXVII	Economic Research Service, Department of Agriculture (Parts 3700—3799)
XXXVIII	World Agricultural Outlook Board, Department of Agriculture (Parts 3800—3899)
XLI	[Reserved]
XLII	Rural Business-Cooperative Service and Rural Utilities Service, Department of Agriculture (Parts 4200—4299)

Title 8—Aliens and Nationality

Chap.

I Department of Homeland Security (Parts 1—499)

V Executive Office for Immigration Review, Department of Justice (Parts 1000—1399)

Title 9—Animals and Animal Products

I Animal and Plant Health Inspection Service, Department of Agriculture (Parts 1—199)

II Agricultural Marketing Service (Federal Grain Inspection Service, Fair Trade Practices Program), Department of Agriculture (Parts 200—299)

III Food Safety and Inspection Service, Department of Agriculture (Parts 300—599)

Title 10—Energy

I Nuclear Regulatory Commission (Parts 0—199)

II Department of Energy (Parts 200—699)

III Department of Energy (Parts 700—999)

X Department of Energy (General Provisions) (Parts 1000—1099)

XIII Nuclear Waste Technical Review Board (Parts 1300—1399)

XVII Defense Nuclear Facilities Safety Board (Parts 1700—1799)

XVIII Northeast Interstate Low-Level Radioactive Waste Commission (Parts 1800—1899)

Title 11—Federal Elections

I Federal Election Commission (Parts 1—9099)

II Election Assistance Commission (Parts 9400—9499)

Title 12—Banks and Banking

I Comptroller of the Currency, Department of the Treasury (Parts 1—199)

II Federal Reserve System (Parts 200—299)

III Federal Deposit Insurance Corporation (Parts 300—399)

IV Export-Import Bank of the United States (Parts 400—499)

V (Parts 500—599) [Reserved]

VI Farm Credit Administration (Parts 600—699)

VII National Credit Union Administration (Parts 700—799)

VIII Federal Financing Bank (Parts 800—899)

IX (Parts 900—999)[Reserved]

X Bureau of Consumer Financial Protection (Parts 1000—1099)

XI Federal Financial Institutions Examination Council (Parts 1100—1199)

XII Federal Housing Finance Agency (Parts 1200—1299)

XIII Financial Stability Oversight Council (Parts 1300—1399)

Title 12—Banks and Banking—Continued

Chap.

XIV Farm Credit System Insurance Corporation (Parts 1400—1499)

XV Department of the Treasury (Parts 1500—1599)

XVI Office of Financial Research (Parts 1600—1699)

XVII Office of Federal Housing Enterprise Oversight, Department of Housing and Urban Development (Parts 1700—1799)

XVIII Community Development Financial Institutions Fund, Department of the Treasury (Parts 1800—1899)

Title 13—Business Credit and Assistance

I Small Business Administration (Parts 1—199)

III Economic Development Administration, Department of Commerce (Parts 300—399)

IV Emergency Steel Guarantee Loan Board (Parts 400—499)

V Emergency Oil and Gas Guaranteed Loan Board (Parts 500—599)

Title 14—Aeronautics and Space

I Federal Aviation Administration, Department of Transportation (Parts 1—199)

II Office of the Secretary, Department of Transportation (Aviation Proceedings) (Parts 200—399)

III Commercial Space Transportation, Federal Aviation Administration, Department of Transportation (Parts 400—1199)

V National Aeronautics and Space Administration (Parts 1200—1299)

VI Air Transportation System Stabilization (Parts 1300—1399)

Title 15—Commerce and Foreign Trade

SUBTITLE A—OFFICE OF THE SECRETARY OF COMMERCE (PARTS 0—29)

SUBTITLE B—REGULATIONS RELATING TO COMMERCE AND FOREIGN TRADE

I Bureau of the Census, Department of Commerce (Parts 30—199)

II National Institute of Standards and Technology, Department of Commerce (Parts 200—299)

III International Trade Administration, Department of Commerce (Parts 300—399)

IV Foreign-Trade Zones Board, Department of Commerce (Parts 400—499)

VII Bureau of Industry and Security, Department of Commerce (Parts 700—799)

VIII Bureau of Economic Analysis, Department of Commerce (Parts 800—899)

IX National Oceanic and Atmospheric Administration, Department of Commerce (Parts 900—999)

XI National Technical Information Service, Department of Commerce (Parts 1100—1199)

Title 15—Commerce and Foreign Trade—Continued

Chap.

XIII East-West Foreign Trade Board (Parts 1300—1399)

XIV Minority Business Development Agency (Parts 1400—1499)

SUBTITLE C—REGULATIONS RELATING TO FOREIGN TRADE AGREEMENTS

XX Office of the United States Trade Representative (Parts 2000—2099)

SUBTITLE D—REGULATIONS RELATING TO TELECOMMUNICATIONS AND INFORMATION

XXIII National Telecommunications and Information Administration, Department of Commerce (Parts 2300—2399) [Reserved]

Title 16—Commercial Practices

I Federal Trade Commission (Parts 0—999)

II Consumer Product Safety Commission (Parts 1000—1799)

Title 17—Commodity and Securities Exchanges

I Commodity Futures Trading Commission (Parts 1—199)

II Securities and Exchange Commission (Parts 200—399)

IV Department of the Treasury (Parts 400—499)

Title 18—Conservation of Power and Water Resources

I Federal Energy Regulatory Commission, Department of Energy (Parts 1—399)

III Delaware River Basin Commission (Parts 400—499)

VI Water Resources Council (Parts 700—799)

VIII Susquehanna River Basin Commission (Parts 800—899)

XIII Tennessee Valley Authority (Parts 1300—1399)

Title 19—Customs Duties

I U.S. Customs and Border Protection, Department of Homeland Security; Department of the Treasury (Parts 0—199)

II United States International Trade Commission (Parts 200—299)

III International Trade Administration, Department of Commerce (Parts 300—399)

IV U.S. Immigration and Customs Enforcement, Department of Homeland Security (Parts 400—599) [Reserved]

Title 20—Employees' Benefits

I Office of Workers' Compensation Programs, Department of Labor (Parts 1—199)

II Railroad Retirement Board (Parts 200—399)

III Social Security Administration (Parts 400—499)

Title 20—Employees' Benefits—Continued

Chap.

IV Employees' Compensation Appeals Board, Department of Labor (Parts 500—599)

V Employment and Training Administration, Department of Labor (Parts 600—699)

VI Office of Workers' Compensation Programs, Department of Labor (Parts 700—799)

VII Benefits Review Board, Department of Labor (Parts 800—899)

VIII Joint Board for the Enrollment of Actuaries (Parts 900—999)

IX Office of the Assistant Secretary for Veterans' Employment and Training Service, Department of Labor (Parts 1000—1099)

Title 21—Food and Drugs

I Food and Drug Administration, Department of Health and Human Services (Parts 1—1299)

II Drug Enforcement Administration, Department of Justice (Parts 1300—1399)

III Office of National Drug Control Policy (Parts 1400—1499)

Title 22—Foreign Relations

I Department of State (Parts 1—199)

II Agency for International Development (Parts 200—299)

III Peace Corps (Parts 300—399)

IV International Joint Commission, United States and Canada (Parts 400—499)

V Broadcasting Board of Governors (Parts 500—599)

VII Overseas Private Investment Corporation (Parts 700—799)

IX Foreign Service Grievance Board (Parts 900—999)

X Inter-American Foundation (Parts 1000—1099)

XI International Boundary and Water Commission, United States and Mexico, United States Section (Parts 1100—1199)

XII United States International Development Cooperation Agency (Parts 1200—1299)

XIII Millennium Challenge Corporation (Parts 1300—1399)

XIV Foreign Service Labor Relations Board; Federal Labor Relations Authority; General Counsel of the Federal Labor Relations Authority; and the Foreign Service Impasse Disputes Panel (Parts 1400—1499)

XV African Development Foundation (Parts 1500—1599)

XVI Japan-United States Friendship Commission (Parts 1600—1699)

XVII United States Institute of Peace (Parts 1700—1799)

Title 23—Highways

I Federal Highway Administration, Department of Transportation (Parts 1—999)

Title 23—Highways—Continued

Chap.

II National Highway Traffic Safety Administration and Federal Highway Administration, Department of Transportation (Parts 1200—1299)

III National Highway Traffic Safety Administration, Department of Transportation (Parts 1300—1399)

Title 24—Housing and Urban Development

SUBTITLE A—OFFICE OF THE SECRETARY, DEPARTMENT OF HOUSING AND URBAN DEVELOPMENT (PARTS 0—99)

SUBTITLE B—REGULATIONS RELATING TO HOUSING AND URBAN DEVELOPMENT

I Office of Assistant Secretary for Equal Opportunity, Department of Housing and Urban Development (Parts 100—199)

II Office of Assistant Secretary for Housing-Federal Housing Commissioner, Department of Housing and Urban Development (Parts 200—299)

III Government National Mortgage Association, Department of Housing and Urban Development (Parts 300—399)

IV Office of Housing and Office of Multifamily Housing Assistance Restructuring, Department of Housing and Urban Development (Parts 400—499)

V Office of Assistant Secretary for Community Planning and Development, Department of Housing and Urban Development (Parts 500—599)

VI Office of Assistant Secretary for Community Planning and Development, Department of Housing and Urban Development (Parts 600—699) [Reserved]

VII Office of the Secretary, Department of Housing and Urban Development (Housing Assistance Programs and Public and Indian Housing Programs) (Parts 700—799)

VIII Office of the Assistant Secretary for Housing—Federal Housing Commissioner, Department of Housing and Urban Development (Section 8 Housing Assistance Programs, Section 202 Direct Loan Program, Section 202 Supportive Housing for the Elderly Program and Section 811 Supportive Housing for Persons With Disabilities Program) (Parts 800—899)

IX Office of Assistant Secretary for Public and Indian Housing, Department of Housing and Urban Development (Parts 900—1699)

XII Office of Inspector General, Department of Housing and Urban Development (Parts 2000—2099)

XV Emergency Mortgage Insurance and Loan Programs, Department of Housing and Urban Development (Parts 2700—2799) [Reserved]

XX Office of Assistant Secretary for Housing—Federal Housing Commissioner, Department of Housing and Urban Development (Parts 3200—3899)

XXIV Board of Directors of the HOPE for Homeowners Program (Parts 4000—4099) [Reserved]

XXV Neighborhood Reinvestment Corporation (Parts 4100—4199)

Title 25—Indians

Chap.

I Bureau of Indian Affairs, Department of the Interior (Parts 1—299)

II Indian Arts and Crafts Board, Department of the Interior (Parts 300—399)

III National Indian Gaming Commission, Department of the Interior (Parts 500—599)

IV Office of Navajo and Hopi Indian Relocation (Parts 700—899)

V Bureau of Indian Affairs, Department of the Interior, and Indian Health Service, Department of Health and Human Services (Part 900—999)

VI Office of the Assistant Secretary, Indian Affairs, Department of the Interior (Parts 1000—1199)

VII Office of the Special Trustee for American Indians, Department of the Interior (Parts 1200—1299)

Title 26—Internal Revenue

I Internal Revenue Service, Department of the Treasury (Parts 1—End)

Title 27—Alcohol, Tobacco Products and Firearms

I Alcohol and Tobacco Tax and Trade Bureau, Department of the Treasury (Parts 1—399)

II Bureau of Alcohol, Tobacco, Firearms, and Explosives, Department of Justice (Parts 400—799)

Title 28—Judicial Administration

I Department of Justice (Parts 0—299)

III Federal Prison Industries, Inc., Department of Justice (Parts 300—399)

V Bureau of Prisons, Department of Justice (Parts 500—599)

VI Offices of Independent Counsel, Department of Justice (Parts 600—699)

VII Office of Independent Counsel (Parts 700—799)

VIII Court Services and Offender Supervision Agency for the District of Columbia (Parts 800—899)

IX National Crime Prevention and Privacy Compact Council (Parts 900—999)

XI Department of Justice and Department of State (Parts 1100—1199)

Title 29—Labor

SUBTITLE A—OFFICE OF THE SECRETARY OF LABOR (PARTS 0—99)

SUBTITLE B—REGULATIONS RELATING TO LABOR

I National Labor Relations Board (Parts 100—199)

Title 29—Labor—Continued

Chap.

II Office of Labor-Management Standards, Department of Labor (Parts 200—299)

III National Railroad Adjustment Board (Parts 300—399)

IV Office of Labor-Management Standards, Department of Labor (Parts 400—499)

V Wage and Hour Division, Department of Labor (Parts 500—899)

IX Construction Industry Collective Bargaining Commission (Parts 900—999)

X National Mediation Board (Parts 1200—1299)

XII Federal Mediation and Conciliation Service (Parts 1400—1499)

XIV Equal Employment Opportunity Commission (Parts 1600—1699)

XVII Occupational Safety and Health Administration, Department of Labor (Parts 1900—1999)

XX Occupational Safety and Health Review Commission (Parts 2200—2499)

XXV Employee Benefits Security Administration, Department of Labor (Parts 2500—2599)

XXVII Federal Mine Safety and Health Review Commission (Parts 2700—2799)

XL Pension Benefit Guaranty Corporation (Parts 4000—4999)

Title 30—Mineral Resources

I Mine Safety and Health Administration, Department of Labor (Parts 1—199)

II Bureau of Safety and Environmental Enforcement, Department of the Interior (Parts 200—299)

IV Geological Survey, Department of the Interior (Parts 400—499)

V Bureau of Ocean Energy Management, Department of the Interior (Parts 500—599)

VII Office of Surface Mining Reclamation and Enforcement, Department of the Interior (Parts 700—999)

XII Office of Natural Resources Revenue, Department of the Interior (Parts 1200—1299)

Title 31—Money and Finance: Treasury

SUBTITLE A—OFFICE OF THE SECRETARY OF THE TREASURY (PARTS 0—50)

SUBTITLE B—REGULATIONS RELATING TO MONEY AND FINANCE

I Monetary Offices, Department of the Treasury (Parts 51—199)

II Fiscal Service, Department of the Treasury (Parts 200—399)

IV Secret Service, Department of the Treasury (Parts 400—499)

V Office of Foreign Assets Control, Department of the Treasury (Parts 500—599)

VI Bureau of Engraving and Printing, Department of the Treasury (Parts 600—699)

VII Federal Law Enforcement Training Center, Department of the Treasury (Parts 700—799)

Title 31—Money and Finance: Treasury—Continued

Chap.

VIII Office of Investment Security, Department of the Treasury (Parts 800—899)

IX Federal Claims Collection Standards (Department of the Treasury—Department of Justice) (Parts 900—999)

X Financial Crimes Enforcement Network, Department of the Treasury (Parts 1000—1099)

Title 32—National Defense

SUBTITLE A—DEPARTMENT OF DEFENSE

I Office of the Secretary of Defense (Parts 1—399)

V Department of the Army (Parts 400—699)

VI Department of the Navy (Parts 700—799)

VII Department of the Air Force (Parts 800—1099)

SUBTITLE B—OTHER REGULATIONS RELATING TO NATIONAL DEFENSE

XII Department of Defense, Defense Logistics Agency (Parts 1200—1299)

XVI Selective Service System (Parts 1600—1699)

XVII Office of the Director of National Intelligence (Parts 1700—1799)

XVIII National Counterintelligence Center (Parts 1800—1899)

XIX Central Intelligence Agency (Parts 1900—1999)

XX Information Security Oversight Office, National Archives and Records Administration (Parts 2000—2099)

XXI National Security Council (Parts 2100—2199)

XXIV Office of Science and Technology Policy (Parts 2400—2499)

XXVII Office for Micronesian Status Negotiations (Parts 2700—2799)

XXVIII Office of the Vice President of the United States (Parts 2800—2899)

Title 33—Navigation and Navigable Waters

I Coast Guard, Department of Homeland Security (Parts 1—199)

II Corps of Engineers, Department of the Army, Department of Defense (Parts 200—399)

IV Saint Lawrence Seaway Development Corporation, Department of Transportation (Parts 400—499)

Title 34—Education

SUBTITLE A—OFFICE OF THE SECRETARY, DEPARTMENT OF EDUCATION (PARTS 1—99)

SUBTITLE B—REGULATIONS OF THE OFFICES OF THE DEPARTMENT OF EDUCATION

I Office for Civil Rights, Department of Education (Parts 100—199)

II Office of Elementary and Secondary Education, Department of Education (Parts 200—299)

Title 34—Education—Continued

Chap.

III Office of Special Education and Rehabilitative Services, Department of Education (Parts 300—399)

IV Office of Career, Technical, and Adult Education, Department of Education (Parts 400—499)

V Office of Bilingual Education and Minority Languages Affairs, Department of Education (Parts 500—599) [Reserved]

VI Office of Postsecondary Education, Department of Education (Parts 600—699)

VII Office of Educational Research and Improvement, Department of Education (Parts 700—799) [Reserved]

SUBTITLE C—REGULATIONS RELATING TO EDUCATION

XI (Parts 1100—1199) [Reserved]

XII National Council on Disability (Parts 1200—1299)

Title 35 [Reserved]

Title 36—Parks, Forests, and Public Property

I National Park Service, Department of the Interior (Parts 1—199)

II Forest Service, Department of Agriculture (Parts 200—299)

III Corps of Engineers, Department of the Army (Parts 300—399)

IV American Battle Monuments Commission (Parts 400—499)

V Smithsonian Institution (Parts 500—599)

VI [Reserved]

VII Library of Congress (Parts 700—799)

VIII Advisory Council on Historic Preservation (Parts 800—899)

IX Pennsylvania Avenue Development Corporation (Parts 900—999)

X Presidio Trust (Parts 1000—1099)

XI Architectural and Transportation Barriers Compliance Board (Parts 1100—1199)

XII National Archives and Records Administration (Parts 1200—1299)

XV Oklahoma City National Memorial Trust (Parts 1500—1599)

XVI Morris K. Udall Scholarship and Excellence in National Environmental Policy Foundation (Parts 1600—1699)

Title 37—Patents, Trademarks, and Copyrights

I United States Patent and Trademark Office, Department of Commerce (Parts 1—199)

II U.S. Copyright Office, Library of Congress (Parts 200—299)

III Copyright Royalty Board, Library of Congress (Parts 300—399)

IV National Institute of Standards and Technology, Department of Commerce (Parts 400—599)

Title 38—Pensions, Bonuses, and Veterans' Relief

Chap.

I Department of Veterans Affairs (Parts 0—199)

II Armed Forces Retirement Home (Parts 200—299)

Title 39—Postal Service

I United States Postal Service (Parts 1—999)

III Postal Regulatory Commission (Parts 3000—3099)

Title 40—Protection of Environment

I Environmental Protection Agency (Parts 1—1099)

IV Environmental Protection Agency and Department of Justice (Parts 1400—1499)

V Council on Environmental Quality (Parts 1500—1599)

VI Chemical Safety and Hazard Investigation Board (Parts 1600—1699)

VII Environmental Protection Agency and Department of Defense; Uniform National Discharge Standards for Vessels of the Armed Forces (Parts 1700—1799)

VIII Gulf Coast Ecosystem Restoration Council (Parts 1800—1899)

Title 41—Public Contracts and Property Management

SUBTITLE A—FEDERAL PROCUREMENT REGULATIONS SYSTEM [NOTE]

SUBTITLE B—OTHER PROVISIONS RELATING TO PUBLIC CONTRACTS

50 Public Contracts, Department of Labor (Parts 50–1—50–999)

51 Committee for Purchase From People Who Are Blind or Severely Disabled (Parts 51–1—51–99)

60 Office of Federal Contract Compliance Programs, Equal Employment Opportunity, Department of Labor (Parts 60–1—60–999)

61 Office of the Assistant Secretary for Veterans' Employment and Training Service, Department of Labor (Parts 61–1—61–999)

62—100 [Reserved]

SUBTITLE C—FEDERAL PROPERTY MANAGEMENT REGULATIONS SYSTEM

101 Federal Property Management Regulations (Parts 101–1—101–99)

102 Federal Management Regulation (Parts 102–1—102–299)

103—104 [Reserved]

105 General Services Administration (Parts 105–1—105–999)

109 Department of Energy Property Management Regulations (Parts 109–1—109–99)

114 Department of the Interior (Parts 114–1—114–99)

115 Environmental Protection Agency (Parts 115–1—115–99)

128 Department of Justice (Parts 128–1—128–99)

129—200 [Reserved]

SUBTITLE D—OTHER PROVISIONS RELATING TO PROPERTY MANAGEMENT [RESERVED]

Chap.

SUBTITLE E—FEDERAL INFORMATION RESOURCES MANAGEMENT REGULATIONS SYSTEM [RESERVED]

SUBTITLE F—FEDERAL TRAVEL REGULATION SYSTEM

300 General (Parts 300–1—300–99)

301 Temporary Duty (TDY) Travel Allowances (Parts 301–1—301–99)

302 Relocation Allowances (Parts 302–1—302–99)

303 Payment of Expenses Connected with the Death of Certain Employees (Part 303–1—303–99)

304 Payment of Travel Expenses from a Non-Federal Source (Parts 304–1—304–99)

Title 42—Public Health

I Public Health Service, Department of Health and Human Services (Parts 1—199)

II—III [Reserved]

IV Centers for Medicare & Medicaid Services, Department of Health and Human Services (Parts 400—699)

V Office of Inspector General-Health Care, Department of Health and Human Services (Parts 1000—1099)

Title 43—Public Lands: Interior

SUBTITLE A—OFFICE OF THE SECRETARY OF THE INTERIOR (PARTS 1—199)

SUBTITLE B—REGULATIONS RELATING TO PUBLIC LANDS

I Bureau of Reclamation, Department of the Interior (Parts 400—999)

II Bureau of Land Management, Department of the Interior (Parts 1000—9999)

III Utah Reclamation Mitigation and Conservation Commission (Parts 10000—10099)

Title 44—Emergency Management and Assistance

I Federal Emergency Management Agency, Department of Homeland Security (Parts 0—399)

IV Department of Commerce and Department of Transportation (Parts 400—499)

Title 45—Public Welfare

SUBTITLE A—DEPARTMENT OF HEALTH AND HUMAN SERVICES (PARTS 1—199)

SUBTITLE B—REGULATIONS RELATING TO PUBLIC WELFARE

II Office of Family Assistance (Assistance Programs), Administration for Children and Families, Department of Health and Human Services (Parts 200—299)

Title 45—Public Welfare—Continued

Chap.

III Office of Child Support Enforcement (Child Support Enforcement Program), Administration for Children and Families, Department of Health and Human Services (Parts 300—399)

IV Office of Refugee Resettlement, Administration for Children and Families, Department of Health and Human Services (Parts 400—499)

V Foreign Claims Settlement Commission of the United States, Department of Justice (Parts 500—599)

VI National Science Foundation (Parts 600—699)

VII Commission on Civil Rights (Parts 700—799)

VIII Office of Personnel Management (Parts 800—899)

IX Denali Commission (Parts 900—999)

X Office of Community Services, Administration for Children and Families, Department of Health and Human Services (Parts 1000—1099)

XI National Foundation on the Arts and the Humanities (Parts 1100—1199)

XII Corporation for National and Community Service (Parts 1200—1299)

XIII Administration for Children and Families, Department of Health and Human Services (Parts 1300—1399)

XVI Legal Services Corporation (Parts 1600—1699)

XVII National Commission on Libraries and Information Science (Parts 1700—1799)

XVIII Harry S. Truman Scholarship Foundation (Parts 1800—1899)

XXI Commission of Fine Arts (Parts 2100—2199)

XXIII Arctic Research Commission (Parts 2300—2399)

XXIV James Madison Memorial Fellowship Foundation (Parts 2400—2499)

XXV Corporation for National and Community Service (Parts 2500—2599)

Title 46—Shipping

I Coast Guard, Department of Homeland Security (Parts 1—199)

II Maritime Administration, Department of Transportation (Parts 200—399)

III Coast Guard (Great Lakes Pilotage), Department of Homeland Security (Parts 400—499)

IV Federal Maritime Commission (Parts 500—599)

Title 47—Telecommunication

I Federal Communications Commission (Parts 0—199)

II Office of Science and Technology Policy and National Security Council (Parts 200—299)

III National Telecommunications and Information Administration, Department of Commerce (Parts 300—399)

Title 47—Telecommunication—Continued

Chap.

IV National Telecommunications and Information Administration, Department of Commerce, and National Highway Traffic Safety Administration, Department of Transportation (Parts 400—499)

V The First Responder Network Authority (Parts 500—599)

Title 48—Federal Acquisition Regulations System

1 Federal Acquisition Regulation (Parts 1—99)

2 Defense Acquisition Regulations System, Department of Defense (Parts 200—299)

3 Department of Health and Human Services (Parts 300—399)

4 Department of Agriculture (Parts 400—499)

5 General Services Administration (Parts 500—599)

6 Department of State (Parts 600—699)

7 Agency for International Development (Parts 700—799)

8 Department of Veterans Affairs (Parts 800—899)

9 Department of Energy (Parts 900—999)

10 Department of the Treasury (Parts 1000—1099)

12 Department of Transportation (Parts 1200—1299)

13 Department of Commerce (Parts 1300—1399)

14 Department of the Interior (Parts 1400—1499)

15 Environmental Protection Agency (Parts 1500—1599)

16 Office of Personnel Management, Federal Employees Health Benefits Acquisition Regulation (Parts 1600—1699)

17 Office of Personnel Management (Parts 1700—1799)

18 National Aeronautics and Space Administration (Parts 1800—1899)

19 Broadcasting Board of Governors (Parts 1900—1999)

20 Nuclear Regulatory Commission (Parts 2000—2099)

21 Office of Personnel Management, Federal Employees Group Life Insurance Federal Acquisition Regulation (Parts 2100—2199)

23 Social Security Administration (Parts 2300—2399)

24 Department of Housing and Urban Development (Parts 2400—2499)

25 National Science Foundation (Parts 2500—2599)

28 Department of Justice (Parts 2800—2899)

29 Department of Labor (Parts 2900—2999)

30 Department of Homeland Security, Homeland Security Acquisition Regulation (HSAR) (Parts 3000—3099)

34 Department of Education Acquisition Regulation (Parts 3400—3499)

51 Department of the Army Acquisition Regulations (Parts 5100—5199) [Reserved]

52 Department of the Navy Acquisition Regulations (Parts 5200—5299)

53 Department of the Air Force Federal Acquisition Regulation Supplement (Parts 5300—5399) [Reserved]

Chap.

54 Defense Logistics Agency, Department of Defense (Parts 5400—5499)

57 African Development Foundation (Parts 5700—5799)

61 Civilian Board of Contract Appeals, General Services Administration (Parts 6100—6199)

99 Cost Accounting Standards Board, Office of Federal Procurement Policy, Office of Management and Budget (Parts 9900—9999)

Title 49—Transportation

SUBTITLE A—OFFICE OF THE SECRETARY OF TRANSPORTATION (PARTS 1—99)

SUBTITLE B—OTHER REGULATIONS RELATING TO TRANSPORTATION

I Pipeline and Hazardous Materials Safety Administration, Department of Transportation (Parts 100—199)

II Federal Railroad Administration, Department of Transportation (Parts 200—299)

III Federal Motor Carrier Safety Administration, Department of Transportation (Parts 300—399)

IV Coast Guard, Department of Homeland Security (Parts 400—499)

V National Highway Traffic Safety Administration, Department of Transportation (Parts 500—599)

VI Federal Transit Administration, Department of Transportation (Parts 600—699)

VII National Railroad Passenger Corporation (AMTRAK) (Parts 700—799)

VIII National Transportation Safety Board (Parts 800—999)

X Surface Transportation Board (Parts 1000—1399)

XI Research and Innovative Technology Administration, Department of Transportation (Parts 1400—1499) [Reserved]

XII Transportation Security Administration, Department of Homeland Security (Parts 1500—1699)

Title 50—Wildlife and Fisheries

I United States Fish and Wildlife Service, Department of the Interior (Parts 1—199)

II National Marine Fisheries Service, National Oceanic and Atmospheric Administration, Department of Commerce (Parts 200—299)

III International Fishing and Related Activities (Parts 300—399)

IV Joint Regulations (United States Fish and Wildlife Service, Department of the Interior and National Marine Fisheries Service, National Oceanic and Atmospheric Administration, Department of Commerce); Endangered Species Committee Regulations (Parts 400—499)

V Marine Mammal Commission (Parts 500—599)

Title 50—Wildlife and Fisheries—Continued

Chap.

VI Fishery Conservation and Management, National Oceanic and Atmospheric Administration, Department of Commerce (Parts 600—699)

Alphabetical List of Agencies Appearing in the CFR

(Revised as of July 1, 2020)

Agency	CFR Title, Subtitle or Chapter
Administrative Conference of the United States	1, III
Advisory Council on Historic Preservation	36, VIII
Advocacy and Outreach, Office of	7, XXV
Afghanistan Reconstruction, Special Inspector General for	5, LXXXIII
African Development Foundation	22, XV
Federal Acquisition Regulation	48, 57
Agency for International Development	2, VII; 22, II
Federal Acquisition Regulation	48, 7
Agricultural Marketing Service	7, I, VIII, IX, X, XI; 9, II
Agricultural Research Service	7, V
Agriculture, Department of	2, IV; 5, LXXIII
Advocacy and Outreach, Office of	7, XXV
Agricultural Marketing Service	7, I, VIII, IX, X, XI; 9, II
Agricultural Research Service	7, V
Animal and Plant Health Inspection Service	7, III; 9, I
Chief Financial Officer, Office of	7, XXX
Commodity Credit Corporation	7, XIV
Economic Research Service	7, XXXVII
Energy Policy and New Uses, Office of	2, IX; 7, XXIX
Environmental Quality, Office of	7, XXXI
Farm Service Agency	7, VII, XVIII
Federal Acquisition Regulation	48, 4
Federal Crop Insurance Corporation	7, IV
Food and Nutrition Service	7, II
Food Safety and Inspection Service	9, III
Foreign Agricultural Service	7, XV
Forest Service	36, II
Information Resources Management, Office of	7, XXVII
Inspector General, Office of	7, XXVI
National Agricultural Library	7, XLI
National Agricultural Statistics Service	7, XXXVI
National Institute of Food and Agriculture	7, XXXIV
Natural Resources Conservation Service	7, VI
Operations, Office of	7, XXVIII
Procurement and Property Management, Office of	7, XXXII
Rural Business-Cooperative Service	7, XVIII, XLII
Rural Development Administration	7, XLII
Rural Housing Service	7, XVIII, XXXV
Rural Utilities Service	7, XVII, XVIII, XLII
Secretary of Agriculture, Office of	7, Subtitle A
Transportation, Office of	7, XXXIII
World Agricultural Outlook Board	7, XXXVIII
Air Force, Department of	32, VII
Federal Acquisition Regulation Supplement	48, 53
Air Transportation Stabilization Board	14, VI
Alcohol and Tobacco Tax and Trade Bureau	27, I
Alcohol, Tobacco, Firearms, and Explosives, Bureau of	27, II
AMTRAK	49, VII
American Battle Monuments Commission	36, IV
American Indians, Office of the Special Trustee	25, VII
Animal and Plant Health Inspection Service	7, III; 9, I
Appalachian Regional Commission	5, IX
Architectural and Transportation Barriers Compliance Board	36, XI

Agency	CFR Title, Subtitle or Chapter
Arctic Research Commission	45, XXIII
Armed Forces Retirement Home	5, XI; 38, II
Army, Department of	32, V
Engineers, Corps of	33, II; 36, III
Federal Acquisition Regulation	48, 51
Bilingual Education and Minority Languages Affairs, Office of	34, V
Blind or Severely Disabled, Committee for Purchase from People Who Are	41, 51
Broadcasting Board of Governors	22, V
Federal Acquisition Regulation	48, 19
Career, Technical, and Adult Education, Office of	34, IV
Census Bureau	15, I
Centers for Medicare & Medicaid Services	42, IV
Central Intelligence Agency	32, XIX
Chemical Safety and Hazard Investigation Board	40, VI
Chief Financial Officer, Office of	7, XXX
Child Support Enforcement, Office of	45, III
Children and Families, Administration for	45, II, III, IV, X, XIII
Civil Rights, Commission on	5, LXVIII; 45, VII
Civil Rights, Office for	34, I
Coast Guard	33, I; 46, I; 49, IV
Coast Guard (Great Lakes Pilotage)	46, III
Commerce, Department of	2, XIII; 44, IV; 50, VI
Census Bureau	15, I
Economic Analysis, Bureau of	15, VIII
Economic Development Administration	13, III
Emergency Management and Assistance	44, IV
Federal Acquisition Regulation	48, 13
Foreign-Trade Zones Board	15, IV
Industry and Security, Bureau of	15, VII
International Trade Administration	15, III; 19, III
National Institute of Standards and Technology	15, II; 37, IV
National Marine Fisheries Service	50, II, IV
National Oceanic and Atmospheric Administration	15, IX; 50, II, III, IV, VI
National Technical Information Service	15, XI
National Telecommunications and Information Administration	15, XXIII; 47, III, IV
National Weather Service	15, IX
Patent and Trademark Office, United States	37, I
Secretary of Commerce, Office of	15, Subtitle A
Commercial Space Transportation	14, III
Commodity Credit Corporation	7, XIV
Commodity Futures Trading Commission	5, XLI; 17, I
Community Planning and Development, Office of Assistant Secretary for	24, V, VI
Community Services, Office of	45, X
Comptroller of the Currency	12, I
Construction Industry Collective Bargaining Commission	29, IX
Consumer Financial Protection Bureau	5, LXXXIV; 12, X
Consumer Product Safety Commission	5, LXXI; 16, II
Copyright Royalty Board	37, III
Corporation for National and Community Service	2, XXII; 45, XII, XXV
Cost Accounting Standards Board	48, 99
Council of the Inspectors General on Integrity and Efficiency	5, XCVIII
Council on Environmental Quality	40, V
Court Services and Offender Supervision Agency for the District of Columbia	5, LXX; 28, VIII
Customs and Border Protection	19, I
Defense, Department of	2, XI; 5, XXVI; 32, Subtitle A; 40, VII
Advanced Research Projects Agency	32, I
Air Force Department	32, VII
Army Department	32, V; 33, II; 36, III; 48, 51
Defense Acquisition Regulations System	48, 2
Defense Intelligence Agency	32, I
Defense Logistics Agency	32, I, XII; 48, 54

Agency	CFR Title, Subtitle or Chapter
Engineers, Corps of	33, II; 36, III
National Imagery and Mapping Agency	32, I
Navy, Department of	32, VI; 48, 52
Secretary of Defense, Office of	2, XI; 32, I
Defense Contract Audit Agency	32, I
Defense Intelligence Agency	32, I
Defense Logistics Agency	32, XII; 48, 54
Defense Nuclear Facilities Safety Board	10, XVII
Delaware River Basin Commission	18, III
Denali Commission	45, IX
Disability, National Council on	5, C; 34, XII
District of Columbia, Court Services and Offender Supervision Agency for the	5, LXX; 28, VIII
Drug Enforcement Administration	21, II
East-West Foreign Trade Board	15, XIII
Economic Analysis, Bureau of	15, VIII
Economic Development Administration	13, III
Economic Research Service	7, XXXVII
Education, Department of	2, XXXIV; 5, LIII
Bilingual Education and Minority Languages Affairs, Office of	34, V
Career, Technical, and Adult Education, Office of	34, IV
Civil Rights, Office for	34, I
Educational Research and Improvement, Office of	34, VII
Elementary and Secondary Education, Office of	34, II
Federal Acquisition Regulation	48, 34
Postsecondary Education, Office of	34, VI
Secretary of Education, Office of	34, Subtitle A
Special Education and Rehabilitative Services, Office of	34, III
Educational Research and Improvement, Office of	34, VII
Election Assistance Commission	2, LVIII; 11, II
Elementary and Secondary Education, Office of	34, II
Emergency Oil and Gas Guaranteed Loan Board	13, V
Emergency Steel Guarantee Loan Board	13, IV
Employee Benefits Security Administration	29, XXV
Employees' Compensation Appeals Board	20, IV
Employees Loyalty Board	5, V
Employment and Training Administration	20, V
Employment Policy, National Commission for	1, IV
Employment Standards Administration	20, VI
Endangered Species Committee	50, IV
Energy, Department of	2, IX; 5, XXIII; 10, II, III, X
Federal Acquisition Regulation	48, 9
Federal Energy Regulatory Commission	5, XXIV; 18, I
Property Management Regulations	41, 109
Energy, Office of	7, XXIX
Engineers, Corps of	33, II; 36, III
Engraving and Printing, Bureau of	31, VI
Environmental Protection Agency	2, XV; 5, LIV; 40, I, IV, VII
Federal Acquisition Regulation	48, 15
Property Management Regulations	41, 115
Environmental Quality, Office of	7, XXXI
Equal Employment Opportunity Commission	5, LXII; 29, XIV
Equal Opportunity, Office of Assistant Secretary for	24, I
Executive Office of the President	3, I
Environmental Quality, Council on	40, V
Management and Budget, Office of	2, Subtitle A; 5, III, LXXVII; 14, VI; 48, 99
National Drug Control Policy, Office of	2, XXXVI; 21, III
National Security Council	32, XXI; 47, II
Presidential Documents	3
Science and Technology Policy, Office of	32, XXIV; 47, II
Trade Representative, Office of the United States	15, XX
Export-Import Bank of the United States	2, XXXV; 5, LII; 12, IV
Family Assistance, Office of	45, II

Agency	CFR Title, Subtitle or Chapter
Farm Credit Administration	5, XXXI; 12, VI
Farm Credit System Insurance Corporation	5, XXX; 12, XIV
Farm Service Agency	7, VII, XVIII
Federal Acquisition Regulation	48, 1
Federal Aviation Administration	14, I
Commercial Space Transportation	14, III
Federal Claims Collection Standards	31, IX
Federal Communications Commission	5, XXIX; 47, I
Federal Contract Compliance Programs, Office of	41, 60
Federal Crop Insurance Corporation	7, IV
Federal Deposit Insurance Corporation	5, XXII; 12, III
Federal Election Commission	5, XXXVII; 11, I
Federal Emergency Management Agency	44, I
Federal Employees Group Life Insurance Federal Acquisition Regulation	48, 21
Federal Employees Health Benefits Acquisition Regulation	48, 16
Federal Energy Regulatory Commission	5, XXIV; 18, I
Federal Financial Institutions Examination Council	12, XI
Federal Financing Bank	12, VIII
Federal Highway Administration	23, I, II
Federal Home Loan Mortgage Corporation	1, IV
Federal Housing Enterprise Oversight Office	12, XVII
Federal Housing Finance Agency	5, LXXX; 12, XII
Federal Labor Relations Authority	5, XIV, XLIX; 22, XIV
Federal Law Enforcement Training Center	31, VII
Federal Management Regulation	41, 102
Federal Maritime Commission	46, IV
Federal Mediation and Conciliation Service	29, XII
Federal Mine Safety and Health Review Commission	5, LXXIV; 29, XXVII
Federal Motor Carrier Safety Administration	49, III
Federal Prison Industries, Inc.	28, III
Federal Procurement Policy Office	48, 99
Federal Property Management Regulations	41, 101
Federal Railroad Administration	49, II
Federal Register, Administrative Committee of	1, I
Federal Register, Office of	1, II
Federal Reserve System	12, II
Board of Governors	5, LVIII
Federal Retirement Thrift Investment Board	5, VI, LXXVI
Federal Service Impasses Panel	5, XIV
Federal Trade Commission	5, XLVII; 16, I
Federal Transit Administration	49, VI
Federal Travel Regulation System	41, Subtitle F
Financial Crimes Enforcement Network	31, X
Financial Research Office	12, XVI
Financial Stability Oversight Council	12, XIII
Fine Arts, Commission of	45, XXI
Fiscal Service	31, II
Fish and Wildlife Service, United States	50, I, IV
Food and Drug Administration	21, I
Food and Nutrition Service	7, II
Food Safety and Inspection Service	9, III
Foreign Agricultural Service	7, XV
Foreign Assets Control, Office of	31, V
Foreign Claims Settlement Commission of the United States	45, V
Foreign Service Grievance Board	22, IX
Foreign Service Impasse Disputes Panel	22, XIV
Foreign Service Labor Relations Board	22, XIV
Foreign-Trade Zones Board	15, IV
Forest Service	36, II
General Services Administration	5, LVII; 41, 105
Contract Appeals, Board of	48, 61
Federal Acquisition Regulation	48, 5
Federal Management Regulation	41, 102
Federal Property Management Regulations	41, 101
Federal Travel Regulation System	41, Subtitle F
General	41, 300

Agency	CFR Title, Subtitle or Chapter
Payment From a Non-Federal Source for Travel Expenses	41, 304
Payment of Expenses Connected With the Death of Certain Employees	41, 303
Relocation Allowances	41, 302
Temporary Duty (TDY) Travel Allowances	41, 301
Geological Survey	30, IV
Government Accountability Office	4, I
Government Ethics, Office of	5, XVI
Government National Mortgage Association	24, III
Grain Inspection, Packers and Stockyards Administration	7, VIII; 9, II
Gulf Coast Ecosystem Restoration Council	2, LIX; 40, VIII
Harry S. Truman Scholarship Foundation	45, XVIII
Health and Human Services, Department of	2, III; 5, XLV; 45, Subtitle A
Centers for Medicare & Medicaid Services	42, IV
Child Support Enforcement, Office of	45, III
Children and Families, Administration for	45, II, III, IV, X, XIII
Community Services, Office of	45, X
Family Assistance, Office of	45, II
Federal Acquisition Regulation	48, 3
Food and Drug Administration	21, I
Indian Health Service	25, V
Inspector General (Health Care), Office of	42, V
Public Health Service	42, I
Refugee Resettlement, Office of	45, IV
Homeland Security, Department of	2, XXX; 5, XXXVI; 6, I; 8, I
Coast Guard	33, I; 46, I; 49, IV
Coast Guard (Great Lakes Pilotage)	46, III
Customs and Border Protection	19, I
Federal Emergency Management Agency	44, I
Human Resources Management and Labor Relations Systems	5, XCVII
Immigration and Customs Enforcement Bureau	19, IV
Transportation Security Administration	49, XII
HOPE for Homeowners Program, Board of Directors of	24, XXIV
Housing, Office of, and Multifamily Housing Assistance Restructuring, Office of	24, IV
Housing and Urban Development, Department of	2, XXIV; 5, LXV; 24, Subtitle B
Community Planning and Development, Office of Assistant Secretary for	24, V, VI
Equal Opportunity, Office of Assistant Secretary for	24, I
Federal Acquisition Regulation	48, 24
Federal Housing Enterprise Oversight, Office of	12, XVII
Government National Mortgage Association	24, III
Housing—Federal Housing Commissioner, Office of Assistant Secretary for	24, II, VIII, X, XX
Housing, Office of, and Multifamily Housing Assistance Restructuring, Office of	24, IV
Inspector General, Office of	24, XII
Public and Indian Housing, Office of Assistant Secretary for	24, IX
Secretary, Office of	24, Subtitle A, VII
Housing—Federal Housing Commissioner, Office of Assistant Secretary for	24, II, VIII, X, XX
Immigration and Customs Enforcement Bureau	19, IV
Immigration Review, Executive Office for	8, V
Independent Counsel, Office of	28, VII
Independent Counsel, Offices of	28, VI
Indian Affairs, Bureau of	25, I, V
Indian Affairs, Office of the Assistant Secretary	25, VI
Indian Arts and Crafts Board	25, II
Indian Health Service	25, V
Industry and Security, Bureau of	15, VII
Information Resources Management, Office of	7, XXVII
Information Security Oversight Office, National Archives and Records Administration	32, XX

Agency	CFR Title, Subtitle or Chapter
Inspector General	
Agriculture Department	7, XXVI
Health and Human Services Department	42, V
Housing and Urban Development Department	24, XII, XV
Institute of Peace, United States	22, XVII
Inter-American Foundation	5, LXIII; 22, X
Interior, Department of	2, XIV
American Indians, Office of the Special Trustee	25, VII
Endangered Species Committee	50, IV
Federal Acquisition Regulation	48, 14
Federal Property Management Regulations System	41, 114
Fish and Wildlife Service, United States	50, I, IV
Geological Survey	30, IV
Indian Affairs, Bureau of	25, I, V
Indian Affairs, Office of the Assistant Secretary	25, VI
Indian Arts and Crafts Board	25, II
Land Management, Bureau of	43, II
National Indian Gaming Commission	25, III
National Park Service	36, I
Natural Resource Revenue, Office of	30, XII
Ocean Energy Management, Bureau of	30, V
Reclamation, Bureau of	43, I
Safety and Enforcement Bureau, Bureau of	30, II
Secretary of the Interior, Office of	2, XIV; 43, Subtitle A
Surface Mining Reclamation and Enforcement, Office of	30, VII
Internal Revenue Service	26, I
International Boundary and Water Commission, United States and Mexico, United States Section	22, XI
International Development, United States Agency for	22, II
Federal Acquisition Regulation	48, 7
International Development Cooperation Agency, United States	22, XII
International Development Finance Corporation, U.S.	5, XXXIII; 22, VII
International Joint Commission, United States and Canada	22, IV
International Organizations Employees Loyalty Board	5, V
International Trade Administration	15, III; 19, III
International Trade Commission, United States	19, II
Interstate Commerce Commission	5, XL
Investment Security, Office of	31, VIII
James Madison Memorial Fellowship Foundation	45, XXIV
Japan–United States Friendship Commission	22, XVI
Joint Board for the Enrollment of Actuaries	20, VIII
Justice, Department of	2, XXVIII; 5, XXVIII; 28, I, XI; 40, IV
Alcohol, Tobacco, Firearms, and Explosives, Bureau of	27, II
Drug Enforcement Administration	21, II
Federal Acquisition Regulation	48, 28
Federal Claims Collection Standards	31, IX
Federal Prison Industries, Inc.	28, III
Foreign Claims Settlement Commission of the United States	45, V
Immigration Review, Executive Office for	8, V
Independent Counsel, Offices of	28, VI
Prisons, Bureau of	28, V
Property Management Regulations	41, 128
Labor, Department of	2, XXIX; 5, XLII
Employee Benefits Security Administration	29, XXV
Employees' Compensation Appeals Board	20, IV
Employment and Training Administration	20, V
Employment Standards Administration	20, VI
Federal Acquisition Regulation	48, 29
Federal Contract Compliance Programs, Office of	41, 60
Federal Procurement Regulations System	41, 50
Labor-Management Standards, Office of	29, II, IV
Mine Safety and Health Administration	30, I
Occupational Safety and Health Administration	29, XVII
Public Contracts	41, 50

Agency	CFR Title, Subtitle or Chapter
Secretary of Labor, Office of	29, Subtitle A
Veterans' Employment and Training Service, Office of the Assistant Secretary for	41, 61; 20, IX
Wage and Hour Division	29, V
Workers' Compensation Programs, Office of	20, I, VII
Labor-Management Standards, Office of	29, II, IV
Land Management, Bureau of	43, II
Legal Services Corporation	45, XVI
Libraries and Information Science, National Commission on	45, XVII
Library of Congress	36, VII
Copyright Royalty Board	37, III
U.S. Copyright Office	37, II
Management and Budget, Office of	5, III, LXXVII; 14, VI; 48, 99
Marine Mammal Commission	50, V
Maritime Administration	46, II
Merit Systems Protection Board	5, II, LXIV
Micronesian Status Negotiations, Office for	32, XXVII
Military Compensation and Retirement Modernization Commission	5, XCIX
Millennium Challenge Corporation	22, XIII
Mine Safety and Health Administration	30, I
Minority Business Development Agency	15, XIV
Miscellaneous Agencies	1, IV
Monetary Offices	31, I
Morris K. Udall Scholarship and Excellence in National Environmental Policy Foundation	36, XVI
Museum and Library Services, Institute of	2, XXXI
National Aeronautics and Space Administration	2, XVIII; 5, LIX; 14, V
Federal Acquisition Regulation	48, 18
National Agricultural Library	7, XLI
National Agricultural Statistics Service	7, XXXVI
National and Community Service, Corporation for	2, XXII; 45, XII, XXV
National Archives and Records Administration	2, XXVI; 5, LXVI; 36, XII
Information Security Oversight Office	32, XX
National Capital Planning Commission	1, IV, VI
National Counterintelligence Center	32, XVIII
National Credit Union Administration	5, LXXXVI; 12, VII
National Crime Prevention and Privacy Compact Council	28, IX
National Drug Control Policy, Office of	2, XXXVI; 21, III
National Endowment for the Arts	2, XXXII
National Endowment for the Humanities	2, XXXIII
National Foundation on the Arts and the Humanities	45, XI
National Geospatial-Intelligence Agency	32, I
National Highway Traffic Safety Administration	23, II, III; 47, VI; 49, V
National Imagery and Mapping Agency	32, I
National Indian Gaming Commission	25, III
National Institute of Food and Agriculture	7, XXXIV
National Institute of Standards and Technology	15, II; 37, IV
National Intelligence, Office of Director of	5, IV; 32, XVII
National Labor Relations Board	5, LXI; 29, I
National Marine Fisheries Service	50, II, IV
National Mediation Board	5, CI; 29, X
National Oceanic and Atmospheric Administration	15, IX; 50, II, III, IV, VI
National Park Service	36, I
National Railroad Adjustment Board	29, III
National Railroad Passenger Corporation (AMTRAK)	49, VII
National Science Foundation	2, XXV; 5, XLIII; 45, VI
Federal Acquisition Regulation	48, 25
National Security Council	32, XXI
National Security Council and Office of Science and Technology Policy	47, II
National Technical Information Service	15, XI
National Telecommunications and Information Administration	15, XXIII; 47, III, IV, V
National Transportation Safety Board	49, VIII

Agency	CFR Title, Subtitle or Chapter
Natural Resource Revenue, Office of	30, XII
Natural Resources Conservation Service	7, VI
Navajo and Hopi Indian Relocation, Office of	25, IV
Navy, Department of	32, VI
Federal Acquisition Regulation	48, 52
Neighborhood Reinvestment Corporation	24, XXV
Northeast Interstate Low-Level Radioactive Waste Commission	10, XVIII
Nuclear Regulatory Commission	2, XX; 5, XLVIII; 10, I
Federal Acquisition Regulation	48, 20
Occupational Safety and Health Administration	29, XVII
Occupational Safety and Health Review Commission	29, XX
Ocean Energy Management, Bureau of	30, V
Oklahoma City National Memorial Trust	36, XV
Operations Office	7, XXVIII
Patent and Trademark Office, United States	37, I
Payment From a Non-Federal Source for Travel Expenses	41, 304
Payment of Expenses Connected With the Death of Certain Employees	41, 303
Peace Corps	2, XXXVII; 22, III
Pennsylvania Avenue Development Corporation	36, IX
Pension Benefit Guaranty Corporation	29, XL
Personnel Management, Office of	5, I, IV, XXXV; 45, VIII
Federal Acquisition Regulation	48, 17
Federal Employees Group Life Insurance Federal Acquisition Regulation	48, 21
Federal Employees Health Benefits Acquisition Regulation	48, 16
Human Resources Management and Labor Relations Systems, Department of Homeland Security	5, XCVII
Pipeline and Hazardous Materials Safety Administration	49, I
Postal Regulatory Commission	5, XLVI; 39, III
Postal Service, United States	5, LX; 39, I
Postsecondary Education, Office of	34, VI
President's Commission on White House Fellowships	1, IV
Presidential Documents	3
Presidio Trust	36, X
Prisons, Bureau of	28, V
Privacy and Civil Liberties Oversight Board	6, X
Procurement and Property Management, Office of	7, XXXII
Public Contracts, Department of Labor	41, 50
Public Health Service	42, I
Public and Indian Housing, Office of Assistant Secretary for	24, IX
Railroad Retirement Board	20, II
Reclamation, Bureau of	43, I
Refugee Resettlement, Office of	45, IV
Relocation Allowances	41, 302
Research and Innovative Technology Administration	49, XI
Rural Business-Cooperative Service	7, XVIII, XLII
Rural Development Administration	7, XLII
Rural Housing Service	7, XVIII, XXXV
Rural Utilities Service	7, XVII, XVIII, XLII
Safety and Environmental Enforcement, Bureau of	30, II
Saint Lawrence Seaway Development Corporation	33, IV
Science and Technology Policy, Office of	32, XXIV
Science and Technology Policy, Office of, and National Security Council	47, II
Secret Service	31, IV
Securities and Exchange Commission	5, XXXIV; 17, II
Selective Service System	32, XVI
Small Business Administration	2, XXVII; 13, I
Smithsonian Institution	36, V
Social Security Administration	2, XXIII; 20, III; 48, 23
Soldiers' and Airmen's Home, United States	5, XI
Special Counsel, Office of	5, VIII
Special Education and Rehabilitative Services, Office of	34, III
State, Department of	2, VI; 22, I; 28, XI
Federal Acquisition Regulation	48, 6

Agency	CFR Title, Subtitle or Chapter
Surface Mining Reclamation and Enforcement, Office of	30, VII
Surface Transportation Board	49, X
Susquehanna River Basin Commission	18, VIII
Tennessee Valley Authority	5, LXIX; 18, XIII
Trade Representative, United States, Office of	15, XX
Transportation, Department of	2, XII; 5, L
Commercial Space Transportation	14, III
Emergency Management and Assistance	44, IV
Federal Acquisition Regulation	48, 12
Federal Aviation Administration	14, I
Federal Highway Administration	23, I, II
Federal Motor Carrier Safety Administration	49, III
Federal Railroad Administration	49, II
Federal Transit Administration	49, VI
Maritime Administration	46, II
National Highway Traffic Safety Administration	23, II, III; 47, IV; 49, V
Pipeline and Hazardous Materials Safety Administration	49, I
Saint Lawrence Seaway Development Corporation	33, IV
Secretary of Transportation, Office of	14, II; 49, Subtitle A
Transportation Statistics Bureau	49, XI
Transportation, Office of	7, XXXIII
Transportation Security Administration	49, XII
Transportation Statistics Bureau	49, XI
Travel Allowances, Temporary Duty (TDY)	41, 301
Treasury, Department of the	2, X; 5, XXI; 12, XV; 17, IV; 31, IX
Alcohol and Tobacco Tax and Trade Bureau	27, I
Community Development Financial Institutions Fund	12, XVIII
Comptroller of the Currency	12, I
Customs and Border Protection	19, I
Engraving and Printing, Bureau of	31, VI
Federal Acquisition Regulation	48, 10
Federal Claims Collection Standards	31, IX
Federal Law Enforcement Training Center	31, VII
Financial Crimes Enforcement Network	31, X
Fiscal Service	31, II
Foreign Assets Control, Office of	31, V
Internal Revenue Service	26, I
Investment Security, Office of	31, VIII
Monetary Offices	31, I
Secret Service	31, IV
Secretary of the Treasury, Office of	31, Subtitle A
Truman, Harry S. Scholarship Foundation	45, XVIII
United States and Canada, International Joint Commission	22, IV
United States and Mexico, International Boundary and Water Commission, United States Section	22, XI
U.S. Copyright Office	37, II
Utah Reclamation Mitigation and Conservation Commission	43, III
Veterans Affairs, Department of	2, VIII; 38, I
Federal Acquisition Regulation	48, 8
Veterans' Employment and Training Service, Office of the Assistant Secretary for	41, 61; 20, IX
Vice President of the United States, Office of	32, XXVIII
Wage and Hour Division	29, V
Water Resources Council	18, VI
Workers' Compensation Programs, Office of	20, I, VII
World Agricultural Outlook Board	7, XXXVIII

List of CFR Sections Affected

All changes in this volume of the Code of Federal Regulations (CFR) that were made by documents published in the FEDERAL REGISTER since January 1, 2015 are enumerated in the following list. Entries indicate the nature of the changes effected. Page numbers refer to FEDERAL REGISTER pages. The user should consult the entries for chapters, parts and subparts as well as sections for revisions.

For changes to this volume of the CFR prior to this listing, consult the annual edition of the monthly List of CFR Sections Affected (LSA). The LSA is available at *www.govinfo.gov*. For changes to this volume of the CFR prior to 2001, see the ''List of CFR Sections Affected, 1949–1963, 1964–1972, 1973–1985, and 1986–2000'' published in 11 separate volumes. The ''List of CFR Sections Affected 1986–2000'' is available at *www.govinfo.gov*.

2015

40 CFR

80 FR Page

Chapter I

82 Policy statement 42053
82.8 (b) revised 3887
(c)(1) table revised 61992
82.13 (y) and (z) revised 61992
82.1—82.24 (Subpart A) Appendix L revised 61992
82.154 (a)(1)(iii) added 19490
82.170—82.184 (Subpart G) Appendix R revised 19491
Appendix B amended 42952
Appendix D amended; Appendix U added 42953
85 Hearings; comment period extended 44863
86 Hearings; comment period extended 44863
86.1 (b) revised 9100
86.007-35 Revised 9101
86.095-35 (a)(4) revised; (g) removed 9101
86.101 (b)(1), (2)(i) and (3) revised 9102
86.113-04 (a)(1) revised 9102
86.201 Revised 9103
86.213 (a)(2) Table 1 revised 9103
86.513 (a)(1) revised 9103
86.513-2004 Removed 9104
86.529-98 (b) amended 9104
86.1801-01—86.1871-12 (Subpart S) Heading revised 9104

40 CFR—Continued

80 FR Page

Chapter I—Continued

86.1801-12 (a)(2)(ii) and (3) introductory text revised; (a)(2)(iii) added; (a)(4) removed; (a)(5) redesignated as new (a)(4) 9104
86.1803-01 Amended 9104
86.1805-17 (a), (b) and (c) revised 9104
86.1806-17 (a)(8) revised 9104
86.1810-01 (o) revised; (p) removed 9105
86.1810-17 (h)(1) revised 9105
86.1811-04 (j) revised 9105
86.1811-17 (a), (b)(2), (8), (9) introductory text, (10), (11), (c) and (g) revised; (b)(14) added 9105
86.1813-17 (a)(1)(iv) and (2)(i) revised 9107
86.1816-18 (b)(1)(ii)(C), (8) introductory text, (12)(iii) and (c) revised 9108
86.1829-15 (b)(2), (d)(1) and (e)(9) revised; (d)(6) added 9108
86.1844-01 (d)(3) and (7)(i) revised 9109
86.1845-04 (b)(5), (c)(5) and (f)(2) revised 9109
86.1846-01 (b)(1)(i) and (ii) revised 9110
86.1861-17 (a) and (b)(1) revised 9110
86 Appendix I amended 9111

2016

40 CFR

81 FR Page

Chapter I

82 Policy statement.....32241, 70029
82.3 Amended 6768
82.13 (g)(1)(xii), (3)(v) and (viii)(D) revised 6768
(y) and (z) revised 14394
82.24 (c)(2)(xiii), (4)(v), (viii)(D), (d)(2)(i) and (3)(i) revised.....6768
82.104 (m)(2) revised.....6768
82.150 Revised (OMB number pending) 82349
82.152 Amended (OMB number pending) 82349
82.154 Revised (OMB number pending) 82352
(a)(1) introductory text and (viii) revised.....86881
82.155 Added (OMB number pending) 82353
82.156 Heading and (a) through (h) revised; introductory text, (i) introductory text and (j) added (OMB number pending) 82354
82.157 Added (OMB number pending) 82356
82.158 Revised (OMB number pending) 82360
82.160 Revised (OMB number pending) 82362
82.161 Revised (OMB number pending) 82363
82.162 Removed (OMB number pending) 82364
82.164 Revised (OMB number pending) 82364
82.166 Heading, (m) and (q) introductory text revised; introductory text added; (a) through (i) and (l) removed (OMB number pending) 82364
82.168 Added (OMB number pending) 82364
82.150—82.169 (Subpart F) Appendix A revised (OMB number pending) 82365
Appendix B4 added; appendix D revised (OMB number pending) 82392
Appendix E added (OMB number pending) 82392
82.170—82.184 (Subpart G) Table amended.....86881
Appendixes K and M revised; Appendix O amended 86883

40 CFR—Continued

81 FR Page

Chapter I—Continued

Appendix Q revised; Appendix U amended 86885
Appendix V added.....86889
85.525 Revised 73971
85.1406 (f)(2) revised 73972
85.1508 (c) revised.....73972
85.1513 (e)(4) revised.....73972
85.1701 (a)(1) revised.....73972
85.1703 (b) added.....73972
85.1706 (b) revised.....73972
85.1711 Revised 73972
85.1713 Removed 73972
85.1714 Removed 73972
85.1901 Revised 73972
85.1902 Revised 73973
85.1906 (a) revised.....73973
85.2109 (a)(6) revised.....73973
85.2110 (b) revised.....73973
86.1 (c)(2) added; (g)(4) revised; (g)(5) removed.....73973
86.000-2—86.099-1 (Subpart A) Heading revised 73973
86.001-35 Removed.....73973
86.004-2 Amended 73973
86.004-25 Introductory text, (b)(3)(iii)(A), (4)(i), (iii)(D), (F) and (6)(i)(E) revised; (b)(3)(vi) removed; (i) added.....73973
86.004-28 (i) introductory text revised; (j) added 73974
86.004-30 Removed.....73974
86.007-11 Introductory text, (a)(1)(ii), (iii), (2)(ii) and (g) revised; (j) added 73974
86.007-25 Removed.....73975
86.007-30 (d) removed.....73975
86.007-35 Removed.....73975
86.008-10 Introductory text added; (a)(1)(ii), (iii) and (g) revised; (f) removed 73975
86.016-1 (a)(1) and (2) revised 73975
86.078-6 Revised 73975
86.084-4 Revised 73976
86.085-37 (d) removed.....73976
86.094-14 Revised.....73976
86.094-25 (b)(2) and (7)(iii) revised.....73978
86.094-30 Removed.....73978
86.095-14 Removed.....73978
86.095-35 (a) introductory text, (3)(iii)(B), (H) through (K) and (i) revised; (c) added 73978
86.098-14 Removed.....73979
86.143-96 (b)(1)(i) amended 73979
86.402-78 Amended 73979
86.410-2006 (e) introductory text revised 73979

40 CFR—Continued

81 FR Page

Chapter I—Continued

86.419-78 Removed 73979
86.419-2006 (a)(1) revised 73979
86.432-78 (d) revised 73979
86.443-78 Revised 73979
86.444-78 Revised 73979
86.544-90 Introductory text and (a) revised 73980
86.614-84 Revised 73980
86.615-84 Revised 73980
86.1103-87 Removed 73980
86.1103-2016 Added 73980
86.1104-91 Removed 73980
86.1104-2016 Added 73980
86.1105-87 (e) revised; (j) removed 73981
86.1112-87 (a)(2)(iii), (3)(iii), (d) and (e)(2) revised 73981
86.1113-87 (a)(6), (f) and (g)(3) introductory text revised 73981
86.1115-87 Revised 73981
86.1301 Revised 73981
86.1362 (a) revised 73981
86.1370 (g) and (h) revised; (i) and (j) added 73982
86.1801-12 (a)(2)(ii) removed; (a)(3)(i) revised; (a)(3)(ii), (iii) and (iv) redesignated as (a)(3)(iii), (iv) and (v); new (a)(3)(ii) added 73982
86.1802-01 Revised 73982
86.1803-01 Amended 73983
86.1805-17 (b) revised 73983
86.1811-17 (b)(8)(iii)(C) and (g) revised 73984
86.1813-17 (a)(1)(ii), (2)(iii) and (f)(1) revised 73984
86.1816-18 (a) introductory text, (b)(7)(i) introductory text and (9) revised 73984
86.1817-05 (c) introductory text revised 73985
86.1818-12 (a)(2), (c)(4) and (f)(4) revised 73985
86.1819-14 Added 73985
86.1820-01 (b)(7)(i)(A) revised 73991
86.1823-08 (d)(3) amended 73991
86.1838-01 (b)(1)(i)(B) and (d)(3)(iii) introductory text revised; (b)(1)(i)(C) added 73991
86.1844-01 (d)(4)(ii) revised; (d)(7)(iv) added 73991
86.1845-04 (f)(1) revised 73991
86.1846-01 (b)(1)(i) revised 73991
86.1848-10 (c)(9) revised 73991
86.1853-01 Revised 73992
86.1862-04 (d) revised 73992

40 CFR—Continued

81 FR Page

Chapter I—Continued

86.1863-07 (h) removed 73992
86.1865-12 Revised 73992
86.1866-12 Introductory text added; (b) introductory text revised 73996
86.1867-12 Introductory text revised 73996
86.1868-12 Introductory text, (e)(5), (f)(1), (g)(1) and (3) introductory text revised 73996
86.1869-12 Introductory text added; (b)(2) introductory text, (4)(ii) and (f) revised 73997
86.1870-12 Heading, introductory text and (a) introductory text revised; (a)(3) added 73997
86.1871-12 Introductory text, (a) introductory text, (b)(1) and (d) revised 73998
86.1910 (i) revised 73998
86.1912 Revised 73998
86.1920 (b) introductory text revised 73999
86 Appendix I amended 74000

2017

40 CFR

82 FR Page

Chapter I

82 Policy statement 33809
82.154 (c)(1)(ix) revised 45201, 61184
Regulation 82 FR 45205 withdrawn 60890
82.170—82.184 (Subpart G) Appendix R amended 58128

2018

40 CFR

83 FR Page

Chapter I

82 Determination 18431
82.170—82.184 (Subpart G) Regulation at 82 FR 58128 withdrawn 9703
Appendix R amended 38975
86.000-7 Introductory text reinstated; CFR correction 18436
86.1920 Heading added; CFR correction 30573

2019

40 CFR

84 FR
Page

Chapter I

82 Determination 64765
82.42 (a)(1)(iii)(A) revised 34070
82.42 (a)(1)(iii)(F) revised 44230

2020

(Regulations published from January 1, 2020, through July 1, 2020)

40 CFR

85 FR
Page

Chapter I

82.3 Amended..... 15291
82.4 (f) removed; (j) revised; (r) and (s) added 15291
82.9 (a), (b), (e) and (f) removed; (c) introductory text revised 15292
82.10 Removed 15292
82.12 (a)(1) introductory text revised; (a)(2), (b), and (c) removed 15292
82.13 (a), (c), (f)(2)(xvii) through (xxii), (3)(xiii) through (xvii), (g)(1)(xi), (xv), (xvii) through (xxi), (2)(i), (ii), (iii), (vi), (viii) through (xiii), (3)(i)(A), (vii), (4)(xv) through (xviii), (h) heading, (1) introductory text, (ii), (iii), (2) introductory text, (ii) through (v), (viii), (v), (w)(2), (y), (z), and (aa) revised; (f) heading, (2) heading, (g) heading, (2)(xv), (3) heading, (4) heading, (5) through (10), and (w) heading added; (f)(2)(iv), (v), (xvi), (3)(iv), (ix), (g)(2)(xiv), (4)(vii), (xi), and (i) removed; (f)(2)(xiv), (xv), (3) introductory text, and (g)(1) introductory text amended 15292
82.14 Added 15296
82.15 (g)(5) and (5) redesignated as (g)(6) and (7); (g)(3), new (5), and (8) added 15296

40 CFR—Continued

85 FR
Page

Chapter I—Continued

82.16 (a) heading removed; (a)(1) and (e) revised..... 15296
82.23 (a)(i)(F) removed; (b)(1)(i) and (ii) added 15298
82.24 (a)(1), (b)(2)(iv), (c)(3)(i), (ii), (iii), (vi), (viii) through (xiii), (4)(i)(A), (vii), (d)(1) introductory text, and (iii) revised; (b)(1)(iv), (ix), (xi), (xii), (2)(xiv), (c)(1)(vi), (x), (xi), (2)(xvi), (d)(2), and (g) removed; (b)(1)(viii), (x), (2)(xi), (xiii), and (xiv) amended; (c)(6) through (11) added..... 15298
82.1—82.24 (Subpart A) Appendix K 15299
82.62 Amended 15300
82.64 (h) added..... 15300
82.66 (d)(2)(vi) and (e) revised; (f) added..... 15300
82.104 (c) and (h) revised 15300
82.106 (a) revised 15300
82.154 (a)(2)(i) revised..... 14171
82.157 (a) revised 14171
82.270 (e) revised 15301
86.1818-12 (c)(2)(i)(A), (B), (C), (3)(i)(A), (B), and (D) revised..... 25268
86.1865-12 (k)(5)(v) redesignated as (k)(5)(vi); new (k)(5)(v) added..... 22620
86.1866-12 (b) introductory text revised; (c) added 22620
86.1866-12 (a)(2), (b) introductory text, (1), and (2)(i) revised; (a)(3) removed..... 25269
86.1868-12 (a)(2) table amended; (h)(7) added..... 25270
86.1869-12 (c)(1), (2), and (3) revised..... 22621
86.1869-12 (a) and (d)(2) revised; (b)(1)(ix), (x), (4)(xiii) and (xiv) added..... 25270
86.1870-12 (a)(2) and (b)(2) revised..... 25271