AUTHENTICATED
U.S. GOVERNMENT
INFORMATION
GPO

SUBCHAPTER C—AIR PROGRAMS (CONTINUED)

PART 52—APPROVAL AND PROMULGATION OF IMPLEMENTATION PLANS

Subpart A—General Provisions

Sec.
52.01 Definitions.
52.02 Introduction.
52.04 Classification of regions.
52.05 Public availability of emission data.
52.06 Legal authority.
52.07 Control strategies.
52.08 Rules and regulations.
52.09 Compliance schedules.
52.10 Review of new sources and modifications.
52.11 Prevention of air pollution emergency episodes.
52.12 Source surveillance.
52.13 Air quality surveillance; resources; intergovernmental cooperation.
52.14 State ambient air quality standards.
52.15 Public availability of plans.
52.16 Submission to Administrator.
52.17 Severability of provisions.
52.18 Abbreviations.
52.20 Attainment dates for national standards.
52.21 Prevention of significant deterioration of air quality.
52.23 Violation and enforcement.
52.24 Statutory restriction on new sources.
52.26 [Reserved]
52.27 Protection of visibility from sources in attainment areas.
52.28 Protection of visibility from sources in nonattainment areas.
52.29 [Reserved]
52.30 Criteria for limiting application of sanctions under section 110(m) of the Clean Air Act on a statewide basis.
52.31 Selection of sequence of mandatory sanctions for findings made pursuant to section 179 of the Clean Air Act.
52.32 Sanctions following findings of SIP inadequacy.
52.33 Compliance certifications.
52.34 Action on petitions submitted under section 126 relating to emissions of nitrogen oxides.
52.35 What are the requirements of the Federal Implementation Plans (FIPs) for the Clean Air Interstate Rule (CAIR) relating to emissions of nitrogen oxides?
52.36 What are the requirements of the Federal Implementation Plans (FIPs) for the Clean Air Interstate Rule (CAIR) relating to emissions of sulfur dioxide?
52.37 [Reserved]
52.38 What are the requirements of the Federal Implementation Plans (FIPs) for the Cross-State Air Pollution Rule (CSAPR) relating to emissions of nitrogen oxides?
52.39 What are the requirements of the Federal Implementation Plans (FIPs) for the Cross-State Air Pollution Rule (CSAPR) relating to emissions of sulfur dioxide?

Subpart B—Alabama

52.50 Identification of plan.
52.51 Classification of regions.
52.53 Approval status.
52.54 Interstate pollutant transport provisions; What are the FIP requirements for decreases in emissions of nitrogen oxides?
52.55 Interstate pollutant transport provisions; What are the FIP requirements for decreases in emissions of sulfur dioxide?
52.56 [Reserved]
52.57 Control strategy: Sulfur oxides.
52.58 Control strategy: Lead.
52.60 Significant deterioration of air quality.
52.61 [Reserved]
52.62 Control strategy: Sulfur oxides and particulate matter.
52.63 PM_{10} State Implementation Plan development in group II areas.
52.64 Determination of attainment.
52.65 Control strategy: Nitrogen oxides.
52.66 [Reserved]
52.69 Original identification of plan section.

Subpart C—Alaska

52.70 Identification of plan.
52.71 Classification of regions.
52.72 Approval status.
52.73 Approval of plans.
52.74 Original identification of plan section.
52.75 [Reserved]
52.76 1990 Base Year Emission Inventory.
52.77–52.81 [Reserved]
52.82 Extensions.
52.83–52.95 [Reserved]
52.96 Significant deterioration of air quality.
52.97–52.98 [Reserved]

Subpart D—Arizona

52.119 Identification of plan—conditional approvals.
52.120 Identification of plan.
52.121 Classification of regions.
52.122 Negative declarations.
52.123 Approval status.
52.124 Part D disapproval.
52.125 Control strategy and regulations: Sulfur oxides.
52.126 Control strategy and regulations: Particulate matter.

52.127 Commitment to promulgate and implement reasonably available control measures for the agricultural fields and aprons.
52.128 Rule for unpaved parking lots, unpaved roads and vacant lots.
52.129 Review of new sources and modifications.
52.130 Source surveillance.
52.131 Control Strategy and regulations: Fine Particle Matter.
52.132 [Reserved]
52.133 Rules and regulations.
52.134 Compliance schedules.
52.135 Resources.
52.136 Control strategy for ozone: Oxides of nitrogen.
52.137 [Reserved]
52.138 Conformity procedures.
52.139 [Reserved]
52.140 Monitoring transportation trends.
52.141 [Reserved]
52.142 Federal Implementation Plan for Tri-Cities landfill, Salt River Pima-Maricopa Indian Community.
52.143 [Reserved]
52.144 Significant deterioration of air quality.
52.145 Visibility protection.
52.146 Particulate matter (PM–10) Group II SIP commitments.
52.147 Interstate transport.
52.150 Yavapai-Apache Reservation.
52.151 Operating permits.
52.152 Original identification of plan.

Subpart E—Arkansas

52.170 Identification of plan.
52.171 Classification of regions.
52.172 Approval status.
52.173 Visibility protection.
52.174 Control strategy and regulations: Ozone.
52.175–52.180 [Reserved]
52.181 Significant deterioration of air quality.
52.183 Small business assistance program.
52.184 Interstate pollutant transport provisions; What are the FIP requirements for decreases in emissions of nitrogen oxides?
52.200 Original identification of plan section.

Subpart F—California

52.220 Identification of plan—in part.
52.220a Identification of plan—in part.
52.221 Classifications of regions.
52.222 Negative declarations.
52.223 Approval status.
52.224 General requirements.
52.225 Legal authority.
52.226 Control strategy and regulations: Particulate matter, San Joaquin Valley and Mountain Counties Intrastate Regions.
52.227 Control strategy and regulations: Particulate matter, Metropolitan Los Angeles Intrastate Region.
52.228 Regulations: Particulate matter, Southeast Desert Intrastate Region.
52.229 Control strategy and regulations: Photochemical oxidants (hydrocarbons), Metropolitan Los Angeles Intrastate Region.
52.230 Control strategy and regulations: Nitrogen dioxide.
52.231 Regulations: Sulfur oxides.
52.232 Part D conditional approval.
52.233 Review of new sources and modifications.
52.234 Source surveillance.
52.235 Control strategy for ozone: Oxides of nitrogen.
52.236 Rules and regulations.
52.237 Part D disapproval.
52.238 Commitment to undertake rulemaking.
52.239 Alternate compliance plans.
52.240 Compliance schedules.
52.241 Inspection and maintenance program.
52.242 Disapproved rules and regulations.
52.243 Interim approval of the Carbon Monoxide plan for the South Coast.
52.244 Motor vehicle emissions budgets.
52.245 New Source Review rules.
52.246 Control of dry cleaning solvent vapor losses.
52.247 Control Strategy and regulations: Fine Particle Matter.
52.248 Identification of plan—conditional approval.
52.249–52.251 [Reserved]
52.252 Control of degreasing operations.
52.253 Metal surface coating thinner and reducer.
52.254 Organic solvent usage.
52.255 Gasoline transfer vapor control.
52.256 Control of evaporative losses from the filling of vehicular tanks.
52.257–52.262 [Reserved]
52.263 Priority treatment for buses and carpools—Los Angeles Region.
52.264–52.268 [Reserved]
52.269 Control strategy and regulations: Photochemical oxidants (hydrocarbons) and carbon monoxide.
52.270 Significant deterioration of air quality.
52.271 Malfunction, startup, and shutdown regulations.
52.272 Research operations exemptions.
52.273 Open burning.
52.274 California air pollution emergency plan.
52.275 Particulate matter control.
52.276 Sulfur content of fuels.
52.277 Oxides of nitrogen, combustion gas concentration limitations.
52.278 Oxides of nitrogen control.
52.279 Food processing facilities.
52.280 Fuel burning equipment.
52.281 Visibility protection.

52.282 Control strategy and regulations: Ozone.
52.283 Interstate Transport.

Subpart G—Colorado

52.320 Identification of plan.
52.321 Classification of regions.
52.322 Extensions.
52.323 Approval status.
52.324 Legal authority.
52.325 [Reserved]
52.326 Area-wide nitrogen oxides (NO_X) exemptions.
52.327–52.328 [Reserved]
52.329 Rules and regulations.
52.330 Control strategy: Total suspended particulates.
52.331 Committal SIP for the Colorado Group II PM_{10} areas.
52.332 Control strategy: Particulate matter.
52.333–52.342 [Reserved]
52.343 Significant deterioration of air quality.
52.344 Visibility protection.
52.345 Stack height regulations.
52.346 Air quality monitoring requirements.
52.347 [Reserved]
52.348 Emission inventories.
52.349 Control strategy: Carbon monoxide.
52.350 Control strategy: Ozone.
52.351 United States Postal Service substitute Clean Fuel Fleet Program.
52.352 Interstate transport.
52.353 Section 110(a)(2) infrastructure requirements.
52.354 Original identification of plan.

Subpart H—Connecticut

52.369 [Reserved]
52.370 Identification of plan.
52.371 Classification of regions.
52.372 Extensions.
52.373 Approval status.
52.374 Attainment dates for national standards.
52.375 Certification of no sources.
52.376 Control strategy: Carbon monoxide.
52.377 Control strategy: Ozone.
52.378 Control strategy: PM_{10}
52.379 Control strategy: $PM_{2.5}$.
52.380 Rules and regulations.
52.381 Requirements for State implementation plan revisions relating to new motor vehicles.
52.382 Significant deterioration of air quality.
52.383 Stack height review.
52.384 Emission inventories.
52.385 EPA-approved Connecticut regulations.
52.386 Section 110(a)(2) infrastructure requirements.
52.387 Interstate Transport for the 1997 8-hour ozone and $PM_{2.5}$ NAAQS.

Subpart I—Delaware

52.420 Identification of plan.
52.421 Classification of regions.
52.422 Approval status.
52.423 Base year emissions inventory.
52.424 Conditional approval.
52.425 Determinations of attainment.
52.426 Control Strategy plans for attainment and rate-of-progress: ozone.
52.427 Control strategy: Particulate matter.
52.428–52.429 [Reserved]
52.430 Photochemical assessment monitoring stations (PAMS) program.
52.431 [Reserved]
52.432 Significant deterioration of air quality.
52.433 Nonattainment new source review.
52.440 Interstate pollutant transport provisions; What are the FIP requirements for decreases in emissions of nitrogen oxides?
52.441 Interstate pollutant transport provisions; What are the FIP requirements for decreases in emissions of sulfur dioxide?
52.460 Small business stationary source technical and environmental compliance assistance program.
52.465 Original identification of plan section.

Subpart J—District of Columbia

52.470 Identification of plan.
52.471 Classification of regions.
52.472 Approval status.
52.473 [Reserved]
52.474 Base Year Emissions Inventory.
52.475 Determinations of attainment.
52.476 Control strategy: ozone.
52.477 Control strategy: Particular matter.
52.478 Rules and Regulations.
52.479 [Reserved]
52.480 Photochemical assessment monitoring stations (PAMS) program.
52.481–52.483 [Reserved]
52.484 Interstate pollutant transport provisions; What are the FIP requirements for decreases in emissions of nitrogen oxides?
52.485 Interstate pollutant transport provisions; What are the FIP requirements for decreases in emissions of sulfur dioxide?
52.486–52.498 [Reserved]
52.499 Significant deterioration of air quality.
52.510 Small business assistance program.
52.515 Original identification of plan section.

Subpart K—Florida

52.519 [Reserved]
52.520 Identification of plan.
52.521 Classification of regions.
52.522 Approval status.
52.523 Control strategy: Ozone.

52.524 Compliance schedule.
52.525 General requirements.
52.526 Legal authority.
52.527 [Reserved]
52.528 Control strategy: Sulfur oxides and particulate matter.
52.529 [Reserved]
52.530 Significant deterioration of air quality.
52.532 [Reserved]
52.533 Source surveillance.
52.534 Visibility protection.
52.536 Original identification of plan section.
52.540 Interstate pollutant transport provisions; What are the FIP requirements for decreases in emissions of nitrogen oxides?

Subpart L—Georgia

52.569 [Reserved]
52.570 Identification of plan.
52.571 Classification of regions.
52.572 Approval status.
52.573 Control strategy: General.
52.574–52.575 [Reserved]
52.576 Compliance schedules.
52.577 Determination of attainment.
52.578 Control strategy: Sulfur oxides and particulate matter.
52.579 Economic feasibility considerations.
52.580 [Reserved] protection.
52.581 Significant deterioration of air quality.
52.582 Control strategy: Ozone.
52.583 Additional rules and regulations.
52.584 Interstate pollutant transport provisions; What are the FIP requirements for decreases in emissions of nitrogen oxides?
52.585 Interstate pollutant transport provisions; What are the FIP requirements for decreases in emissions of sulfur dioxide?
52.590 Original identification of plan section.

Subpart M—Hawaii

52.620 Identification of plan.
52.621 Classification of regions.
52.622 Original identification of plan.
52.623 Approval status.
52.624 General requirements.
52.625 Legal authority.
52.626 Compliance schedules.
52.627–52.631 [Reserved]
52.632 Significant deterioration of air quality.
52.633 Visibility protection.
52.634 Particulate matter (PM–10) Group III SIP.

Subpart N—Idaho

52.670 Identification of plan.
52.671 Classification of regions.
52.672 Approval of plans.
52.673 Approval status.
52.674 [Reserved]
52.675 Control strategy: Sulfur oxides—Eastern Idaho Intrastate Air Quality Control Region.
52.676 [Reserved]
52.677 Original identification of plan section.
52.678–52.680 [Reserved]
52.681 Permits to construct and tier II operating permits.
52.682 [Reserved]
52.683 Significant deterioration of air quality.
52.684–52.689 [Reserved]
52.690 Visibility protection.
52.691 Extensions.

Subpart O—Illinois

52.719 [Reserved]
52.720 Identification of plan.
52.721 Classification of regions.
52.722 Approval status.
52.723 [Reserved]
52.724 Control strategy: Sulfur dioxide.
52.725 Control strategy: Particulates.
52.726 Control strategy: Ozone.
52.727 [Reserved]
52.728 Control strategy: Nitrogen dioxide. [Reserved]
52.729 [Reserved]
52.730 Compliance schedules.
52.731 Interstate pollutant transport provisions; What are the FIP requirements for decreases in emissions of nitrogen oxides?
52.732 Interstate pollutant transport provisions; What are the FIP requirements for decreases in emissions of sulfur dioxide?
52.733–52.735 [Reserved]
52.736 Review of new sources and modifications.
52.737 Operating permits.
52.738 Significant deterioration of air quality.
52.739 Permit fees.
52.740 Interstate pollution.
52.741 Control strategy: Ozone control measures for Cook, DuPage, Kane, Lake, McHenry and Will Counties.
52.742 Incorporation by reference.
52.743 Continuous monitoring.
52.744 Small business stationary source technical and environmental compliance assistance program.
52.745–52.746 [Reserved]
52.750 Original identification of plan section.

Subpart P—Indiana

52.769 Identification of plan—conditional approval.
52.770 Identification of plan.
52.771 Classification of regions.
52.772 [Reserved]

52.773 Approval status.
52.774 Determination of attainment.
52.775 Legal authority.
52.776 Control strategy: Particulate matter.
52.777 Control strategy: Photochemical oxidants (hydrocarbons).
52.778 Compliance schedules.
52.779 [Reserved]
52.780 Review of new sources and modifications.
52.781 Rules and regulations.
52.782 Request for 18-month extension.
52.783 [Reserved]
52.784 Transportation and land use controls.
52.785 Control strategy: Carbon monoxide.
52.786 Inspection and maintenance program.
52.787 Gasoline transfer vapor control.
52.788 Operating permits.
52.789 Interstate pollutant transport provisions; What are the FIP requirements for decreases in emissions of nitrogen oxides?
52.790 Interstate pollutant transport provisions; What are the FIP requirements for decreases in emissions of sulfur dioxide?
52.791 Visibility protection.
52.792 [Reserved]
52.793 Significant deterioration of air quality.
52.794 Source surveillance.
52.795 Control strategy: Sulfur dioxide.
52.796 Industrial continuous emission monitoring.
52.797 Control strategy: Lead.
52.798 Small business stationary source technical and environmental compliance assistance program.
52.799 Transportation conformity.
52.800 Original identification of plan section.

Subpart Q—Iowa

52.820 Identification of plan.
52.821 Classification of regions.
52.822 Approval status.
52.823 PM_{10} State Implementation Plan Development in Group II Areas.
52.824 Original identification of plan section.
52.825 Compliance schedules.
52.826–52.827 [Reserved]
52.828 Enforcement.
52.829–52.832 [Reserved]
52.833 Significant deterioration of air quality.
52.834 Control strategy: Sulfur dioxide.
52.840 Interstate pollutant transport provisions; What are the FIP requirements for decreases in emissions of nitrogen oxides?
52.841 Interstate pollutant transport provisions; What are the FIP requirements for decreases in emissions of sulfur dioxide?
52.842 Visibility protection.

Subpart R—Kansas

52.869 [Reserved]
52.870 Identification of plan.
52.871 Classification of regions.
52.872 Operating permits.
52.873 Approval status.
52.874 Legal authority.
52.875 Original identification of plan section.
52.876 Compliance schedules.
52.877–52.880 [Reserved]
52.881 PM_{10} State implementation plan development in group II areas.
52.882 Interstate pollutant transport provisions; What are the FIP requirements for decreases in emissions of nitrogen oxides?
52.883 Interstate pollutant transport provisions; What are the FIP requirements for decreases in emissions of sulfur dioxide?
52.884 Significant deterioration of air quality.

Subpart S—Kentucky

52.919 [Reserved]
52.920 Identification of plan.
52.921 Classification of regions.
52.922 [Reserved]
52.923 Approval status.
52.924 Legal authority.
52.925 General requirements.
52.926 Attainment dates for national standards.
52.927 Compliance schedule.
52.928 Control strategy: Sulphur oxides.
52.929 Determination of attainment.
52.930 Control strategy: Ozone.
52.931 Significant deterioration of air quality.
52.932 Rules and regulations.
52.933 Control strategy: Sulfur oxides and particulate matter.
52.934 [Reserved]
52.935 PM_{10} State implementation plan development in group II areas.
52.936 Visibility protection.
52.937 Review of new sources and modifications.
52.938 General conformity.
52.939 Original identification of plan section.
52.940 Interstate pollutant transport provisions; What are the FIP requirements for decreases in emissions of nitrogen oxides?
52.941 Interstate pollutant transport provisions; What are the FIP requirements for decreases in emissions of sulfur dioxide?

Subpart T—Louisiana

52.970 Identification of plan.
52.971 Classification of regions.
52.972–52.974 [Reserved]
52.975 Redesignations and maintenance plans; ozone.

52.976 Review of new sources and modification.
52.977 Control strategy and regulations: Ozone.
52.978–52.983 [Reserved]
52.984 Interstate pollutant transport provisions; What are the FIP requirements for decreases in emissions of nitrogen oxides?
52.985 Visibility protection.
52.986 Significant deterioration of air quality.
52.987 Control of hydrocarbon emissions.
52.988 [Reserved]
52.990 Stack height regulations
52.991 Small business assistance program.
52.992 Area-wide nitrogen oxides exemptions.
52.993 Emissions inventories.
52.994 [Reserved]
52.995 Enhanced ambient air quality monitoring.
52.996 Disapprovals.
52.999 Original Identification of plan section.
52.1000–52.1018 [Reserved]

AUTHORITY: 42 U.S.C. 7401 *et seq.*

EDITORIAL NOTE: Nomenclature changes to part 52 appear at 81 FR 74586, Oct. 26, 2016.

Subpart A—General Provisions

SOURCE: 37 FR 10846, May 31, 1972, unless otherwise noted.

§ 52.01 Definitions.

All terms used in this part but not defined herein shall have the meaning given them in the Clean Air Act and in parts 51 and 60 of this chapter.

(a) The term *stationary source* means any building, structure, facility, or installation which emits or may emit an air pollutant for which a national standard is in effect.

(b) The term *commenced* means that an owner or operator has undertaken a continuous program of construction or modification.

(c) The term *construction* means fabrication, erection, or installation.

(d) The phrases *modification* or *modified source* mean any physical change in, or change in the method of operation of, a stationary source which increases the emission rate of any pollutant for which a national standard has been promulgated under part 50 of this chapter or which results in the emission of any such pollutant not previously emitted, except that:

(1) Routine maintenance, repair, and replacement shall not be considered a physical change, and

(2) The following shall not be considered a change in the method of operation:

(i) An increase in the production rate, if such increase does not exceed the operating design capacity of the source;

(ii) An increase in the hours of operation;

(iii) Use of an alternative fuel or raw material, if prior to the effective date of a paragraph in this part which imposes conditions on or limits modifications, the source is designed to accommodate such alternative use.

(e) The term *startup* means the setting in operation of a source for any purpose.

(f) [Reserved]

(g) The term *heat input* means the total gross calorific value (where gross calorific value is measured by ASTM Method D2015–66, D240–64, or D1826–64) of all fuels burned.

(h) The term *total rated capacity* means the sum of the rated capacities of all fuel-burning equipment connected to a common stack. The rated capacity shall be the maximum guaranteed by the equipment manufacturer or the maximum normally achieved during use, whichever is greater.

[37 FR 19807, Sept. 22, 1972, as amended at 38 FR 12698, May 14, 1973; 39 FR 42514, Dec. 5, 1974; 43 FR 26410, June 19, 1978]

§ 52.02 Introduction.

(a) This part sets forth the Administrator's approval and disapproval of State plans and the Administrator's promulgation of such plans or portions thereof. Approval of a plan or any portion thereof is based upon a determination by the Administrator that such plan or portion meets the requirements of section 110 of the Act and the provisions of part 51 of this chapter.

(b) Any plan or portion thereof promulgated by the Administrator substitutes for a State plan or portion thereof disapproved by the Administrator or not submitted by a State, or supplements a State plan or portion thereof. The promulgated provisions, together with any portions of a State plan approved by the Administrator,

constitute the applicable plan for purposes of the Act.

(c) Where nonregulatory provisions of a plan are disapproved, the disapproval is noted in this part and a detailed evaluation is provided to the State, but no substitute provisions are promulgated by the Administrator.

(d) All approved plans and plan revisions listed in subparts B through DDD and FFF of this part and on file at the Office of the Federal Register are approved for incorporation by reference by the Director of the Federal Register in accordance with 5 U.S.C. 552(a) and 1 CFR part 51. Notice of amendments to the plans will be published in the FEDERAL REGISTER. The plans and plan revisions are available for inspection at the National Archives and Records Administration (NARA). For information on the availability of this material at NARA, call 202–741–6030, or go to: *http://www.archives.gov/federal_register/code_of_federal_regulations/ibr_locations.html*. In addition the plans and plan revisions are available at the following locations:

(1) Office of Air and Radiation, Docket and Information Center (Air Docket), EPA, 401 M St., SW., Room M1500, Washington, DC 20460.

(2) The appropriate EPA Regional Office as listed below:

(i) Connecticut, Maine, Massachusetts, New Hampshire, Rhode Island, and Vermont. Environmental Protection Agency, Region 1, 5 Post Office Square—Suite 100, Boston, MA 02109–3912.

(ii) New York, New Jersey, Puerto Rico, and Virgin Islands. Environmental Protection Agency, Region 2, 290 Broadway, New York, NY 10007–1866.

(iii) Delaware, District of Columbia, Pennsylvania, Maryland, Virginia, and West Virginia. Environmental Protection Agency, Region 3, 1650 Arch Street, Philadelphia, PA 19103–2029.

(iv) Alabama, Florida, Georgia, Kentucky, Mississippi, North Carolina, South Carolina, and Tennessee. Environmental Protection Agency, Region 4, 61 Forsyth Street, Atlanta, Georgia 30303.

(v) Illinois, Indiana, Michigan, Minnesota, Ohio, and Wisconsin. Environmental Protection Agency, Region 5, 77 West Jackson Boulevard, Chicago, IL 60604–3507.

(vi) Arkansas, Louisiana, New Mexico, Oklahoma, and Texas. Environmental Protection Agency, Region 6, Fountain Place, 1445 Ross Avenue, Suite 1200, Dallas TX 75202–2733.

(vii) Iowa, Kansas, Missouri, and Nebraska. Environmental Protection Agency, Region 7, 11201 Renner Boulevard, Lenexa, Kansas 66219.

(viii) Colorado, Montana, North Dakota, South Dakota, Utah, and Wyoming. Environmental Protection Agency, Region 8, 1595 Wynkoop Street, Denver, CO 80202–1129.

(ix) Arizona, California, Hawaii, Nevada, American Samoa, Commonwealth of the Northern Mariana Islands, and Guam. Environmental Protection Agency, Region 9, 75 Hawthorne Street, San Francisco, CA 94105.

(x) Alaska, Idaho, Oregon, and Washington. Environmental Protection Agency, Region 10, 1200 6th Avenue Seattle, WA 98101.

(e) Each State's plan is dealt with in a separate subpart, which includes an introductory section identifying the plan by name and the date of its submittal, a section classifying regions, and a section setting forth dates for attainment of the national standards. Additional sections are included as necessary to specifically identify disapproved provisions, to set forth reasons for disapproval, and to set forth provisions of the plan promulgated by the Administrator. Except as otherwise specified, all supplemental information submitted to the Administrator with respect to any plan has been submitted by the Governor of the State.

(f) Revisions to applicable plans will be included in this part when approved or promulgated by the Administrator.

[37 FR 10846, May 31, 1972, as amended at 37 FR 15080, July 27, 1972; 47 FR 38886, Sept. 3, 1982; 61 FR 16060, Apr. 11, 1996; 72 FR 38793, July 16, 2007; 76 FR 49671, Aug. 11, 2011; 78 FR 37975, June 25, 2013; 79 FR 22035, Apr. 21, 2014]

§ 52.04 Classification of regions.

Each subpart sets forth the priority classification, by pollutant, for each region in the State. Each plan for each region was evaluated according to the requirements of part 51 of this chapter applicable to regions of that priority.

§ 52.05 Public availability of emission data.

Each subpart sets forth the Administrator's disapproval of plan procedures for making emission data available to the public after correlation with applicable emission limitations, and includes the promulgation of requirements that sources report emission data to the Administrator for correlation and public disclosure.

§ 52.06 Legal authority.

(a) The Administrator's determination of the absence or inadequacy of legal authority required to be included in the plan is set forth in each subpart. This includes the legal authority of local agencies and State governmental agencies other than an air pollution control agency if such other agencies are assigned responsibility for carrying out a plan or portion thereof.

(b) No legal authority as such is promulgated by the Administrator. Where required regulatory provisions are not included in the plan by the State because of inadequate legal authority, substitute provisions are promulgated by the Administrator.

[37 FR 10846, May 31, 1972, as amended at 60 FR 33922, June 29, 1995]

§ 52.07 Control strategies.

(a) Each subpart specifies in what respects the control strategies are approved or disapproved. Where emission limitations with a future effective date are employed to carry out a control strategy, approval of the control strategy and the implementing regulations does not supersede the requirements of subpart N of this chapter relating to compliance schedules for individual sources or categories of sources. Compliance schedules for individual sources or categories of sources must require such sources to comply with applicable requirements of the plan as expeditiously as practicable, where the requirement is part of a control strategy designed to attain a primary standard, or within a reasonable time, where the requirement is part of a control strategy designed to attain a secondary standard. All sources must be required to comply with applicable requirements of the plan no later than the date specified in this part for attainment of the national standard which the requirement is intended to implement.

(b) A control strategy may be disapproved as inadequate because it is not sufficiently comprehensive, although all regulations provided to carry out the strategy may themselves be approved. In this case, regulations for carrying out necessary additional measures are promulgated in the subpart.

(c) Where a control strategy is adequate to attain and maintain a national standard but one or more of the regulations to carry it out is not adopted or not enforceable by the State, the control strategy is approved and the necessary regulations are promulgated by the Administrator.

(d) Where a control strategy is adequate to attain and maintain air quality better than that provided for by a national standard but one or more of the regulations to carry it out is not adopted or not enforceable by the State, the control strategy is approved and substitute regulations necessary to attain and maintain the national standard are promulgated.

[37 FR 10846, May 31, 1972, as amended at 37 FR 19807, Sept. 22, 1972; 51 FR 40676, Nov. 7, 1986]

§ 52.08 Rules and regulations.

Each subpart identifies the regulations, including emission limitations, which are disapproved by the Administrator, and includes the regulations which the Administrator promulgates.

§ 52.09 Compliance schedules.

(a) In each subpart, compliance schedules disapproved by the Administrator are identified, and compliance schedules promulgated by the Administrator are set forth.

(b) Individual source compliance schedules submitted with certain plans have not yet been evaluated, and are not approved or disapproved.

(c) The Administrator's approval or promulgation of any compliance schedule shall not affect the responsibility of the owner or operator to comply with any applicable emission limitation on and after the date for final

compliance specified in the applicable schedule.

[37 FR 10846, May 31, 1972, as amended at 38 FR 30877, Nov. 8, 1973]

§ 52.10 Review of new sources and modifications.

In any plan where the review procedure for new sources and source modifications does not meet the requirements of subpart I of this chapter, provisions are promulgated which enable the Administrator to obtain the necessary information and to prevent construction or modification.

[37 FR 10846, May 31, 1972, as amended at 51 FR 40677, Nov. 7, 1986]

§ 52.11 Prevention of air pollution emergency episodes.

(a) Each subpart identifies portions of the air pollution emergency episode contingency plan which are disapproved, and sets forth the Administrator's promulgation of substitute provisions.

(b) No provisions are promulgated to replace any disapproved air quality monitoring or communications portions of a contingency plan, but detailed critiques of such portions are provided to the State.

(c) Where a State plan does not provide for public announcement regarding air pollution emergency episodes or where the State fails to give any such public announcement, the Administrator will issue a public announcement that an episode stage has been reached. When making such an announcement, the Administrator will be guided by the suggested episode criteria and emission control actions suggested in Appendix L of part 51 of this chapter or those in the approved plan.

[37 FR 10846, May 31, 1972, as amended at 37 FR 19807, Sept. 22, 1972]

§ 52.12 Source surveillance.

(a) Each subpart identifies the plan provisions for source surveillance which are disapproved, and sets forth the Administrator's promulgation of necessary provisions for requiring sources to maintain records, make reports, and submit information.

(b) No provisions are promulgated for any disapproved State or local agency procedures for testing, inspection, investigation, or detection, but detailed critiques of such portions are provided to the State.

(c) For purposes of Federal enforcement, the following test procedures and methods shall be used, provided that for the purpose of establishing whether or not a person has violated or is in violation of any provision of the plan, nothing in this part shall preclude the use, including the exclusive use, of any credible evidence or information, relevant to whether a source would have been in compliance with applicable requirements if the appropriate performance or compliance test procedures or methods had been performed:

(1) Sources subject to plan provisions which do not specify a test procedure and sources subject to provisions promulgated by the Administrator will be tested by means of the appropriate procedures and methods prescribed in part 60 of this chapter unless otherwise specified in this part.

(2) Sources subject to approved provisions of a plan wherein a test procedure is specified will be tested by the specified procedure.

[37 FR 10846, May 31, 1972, as amended at 40 FR 26032, June 20, 1975; 62 FR 8328, Feb. 24, 1997]

§ 52.13 Air quality surveillance; resources; intergovernmental cooperation.

Disapproved portions of the plan related to the air quality surveillance system, resources, and intergovernmental cooperation are identified in each subpart, and detailed critiques of such portions are provided to the State. No provisions are promulgated by the Administrator.

§ 52.14 State ambient air quality standards.

Any ambient air quality standard submitted with a plan which is less stringent than a national standard is not considered part of the plan.

§ 52.15 Public availability of plans.

Each State shall make available for public inspection at least one copy of

the plan in at least one city in each region to which such plan is applicable. All such copies shall be kept current.

§ 52.16 Submission to Administrator.

(a) All requests, reports, applications, submissions, and other communications to the Administrator pursuant to this part shall be submitted in duplicate and addressed to the appropriate Regional Office of the Environmental Protection Agency. For any submission pursuant to this part that is also a submission of a plan or plan revision pursuant to 40 CFR part 51, the submission shall conform to the requirements of appendix V to 40 CFR part 51, rather than the requirements of this paragraph.

(b) The Regional Offices are as follows:

(1) Connecticut, Maine, Massachusetts, New Hampshire, Rhode Island, and Vermont. EPA Region 1, 5 Post Office Square—Suite 100, Boston, MA 02109–3912.

(2) New York, New Jersey, Puerto Rico, and Virgin Islands. EPA Region 2, 290 Broadway, New York, NY 10007–1866.

(3) Delaware, District of Columbia, Pennsylvania, Maryland, Virginia, and West Virginia. EPA Region 3, 1650 Arch Street, Philadelphia, PA 19103–2029.

(4) Alabama, Florida, Georgia, Kentucky, Mississippi, North Carolina, South Carolina, and Tennessee. EPA Region 4, 61 Forsyth Street, Atlanta, Georgia 30303.

(5) Illinois, Indiana, Michigan, Minnesota, Ohio, and Wisconsin. EPA Region 5, 77 West Jackson Boulevard, Chicago, IL 60604–3507.

(6) Arkansas, Louisiana, New Mexico, Oklahoma, and Texas. EPA Region 6, Fountain Place, 1445 Ross Avenue, Suite 1200, Dallas, TX 75202–2733.

(7) Iowa, Kansas, Missouri, and Nebraska. Environmental Protection Agency, Region 7, 11201 Renner Boulevard, Lenexa, Kansas 66219.

(8) Colorado, Montana, North Dakota, South Dakota, Utah, and Wyoming. EPA, Region 8, 1595 Wynkoop Street, Denver, CO 80202–1129.

(9) Arizona, California, Hawaii, Nevada, American Samoa, Commonwealth of the Northern Mariana Islands, and Guam. EPA, Region 9, 75 Hawthorne Street, San Francisco, CA 94105.

(10) Alaska, Idaho, Oregon, and Washington. EPA, Region 10, 1200 6th Avenue, Seattle, WA 98101.

[61 FR 16061, Apr. 11, 1996, as amended at 72 FR 38793, July 16, 2007; 76 FR 49671, Aug. 11, 2011; 78 FR 37975, June 25, 2013; 79 FR 22035, Apr. 21, 2014; 80 FR 7341, Feb. 10, 2015]

§ 52.17 Severability of provisions.

The provisions promulgated in this part and the various applications thereof are distinct and severable. If any provision of this part or the application thereof to any person or circumstances is held invalid, such invalidity shall not affect other provisions or application of such provision to other persons or circumstances which can be given effect without the invalid provision or application.

[37 FR 19808, Sept. 22, 1972]

§ 52.18 Abbreviations.

Abbreviations used in this part shall be those set forth in part 60 of this chapter.

[38 FR 12698, May 14, 1973]

§ 52.20 Attainment dates for national standards.

Each subpart contains a section which specifies the latest dates by which national standards are to be attained in each region in the State. An attainment date which only refers to a month and a year (such as July 1975) shall be construed to mean the last day of the month in question. However, the specification of attainment dates for national standards does not relieve any State from the provisions of subpart N of this chapter which require all sources and categories of sources to comply with applicable requirements of the plan—

(a) As expeditiously as practicable where the requirement is part of a control strategy designed to attain a primary standard, and

(b) Within a reasonable time where the requirement is part of a control strategy designed to attain a secondary standard.

[37 FR 19808, Sept. 22, 1972, as amended at 39 FR 34535, Sept. 26, 1974; 51 FR 40676, Nov. 7, 1986]

§ 52.21 Prevention of significant deterioration of air quality.

(a)(1) *Plan disapproval.* The provisions of this section are applicable to any State implementation plan which has been disapproved with respect to prevention of significant deterioration of air quality in any portion of any State where the existing air quality is better than the national ambient air quality standards. Specific disapprovals are listed where applicable, in subparts B through DDD and FFF of this part. The provisions of this section have been incorporated by reference into the applicable implementation plans for various States, as provided in subparts B through DDD and FFF of this part. Where this section is so incorporated, the provisions shall also be applicable to all lands owned by the Federal Government and Indian Reservations located in such State. No disapproval with respect to a State's failure to prevent significant deterioration of air quality shall invalidate or otherwise affect the obligations of States, emission sources, or other persons with respect to all portions of plans approved or promulgated under this part.

(2) *Applicability procedures.* (i) The requirements of this section apply to the construction of any new major stationary source (as defined in paragraph (b)(1) of this section) or any project at an existing major stationary source in an area designated as attainment or unclassifiable under sections 107(d)(1)(A)(ii) or (iii) of the Act.

(ii) The requirements of paragraphs (j) through (r) of this section apply to the construction of any new major stationary source or the major modification of any existing major stationary source, except as this section otherwise provides.

(iii) No new major stationary source or major modification to which the requirements of paragraphs (j) through (r)(5) of this section apply shall begin actual construction without a permit that states that the major stationary source or major modification will meet those requirements. The Administrator has authority to issue any such permit.

(iv) The requirements of the program will be applied in accordance with the principles set out in paragraphs (a)(2)(iv)(*a*) through (*f*) of this section.

(*a*) Except as otherwise provided in paragraphs (a)(2)(v) and (vi) of this section, and consistent with the definition of major modification contained in paragraph (b)(2) of this section, a project is a major modification for a regulated NSR pollutant if it causes two types of emissions increases—a significant emissions increase (as defined in paragraph (b)(40) of this section), and a significant net emissions increase (as defined in paragraphs (b)(3) and (b)(23) of this section). The project is not a major modification if it does not cause a significant emissions increase. If the project causes a significant emissions increase, then the project is a major modification only if it also results in a significant net emissions increase.

(*b*) The procedure for calculating (before beginning actual construction) whether a significant emissions increase (i.e., the first step of the process) will occur depends upon the type of emissions units being modified, according to paragraphs (a)(2)(iv)(*c*) through (*f*) of this section. The procedure for calculating (before beginning actual construction) whether a significant net emissions increase will occur at the major stationary source (i.e., the second step of the process) is contained in the definition in paragraph (b)(3) of this section. Regardless of any such preconstruction projections, a major modification results if the project causes a significant emissions increase and a significant net emissions increase.

(*c*) *Actual-to-projected-actual applicability test for projects that only involve existing emissions units.* A significant emissions increase of a regulated NSR pollutant is projected to occur if the sum of the difference between the projected actual emissions (as defined in paragraph (b)(41) of this section) and the baseline actual emissions (as defined in paragraphs (b)(48)(i) and (ii) of this section), for each existing emissions unit, equals or exceeds the significant amount for that pollutant (as defined in paragraph (b)(23) of this section).

(*d*) *Actual-to-potential test for projects that only involve construction of a new*

emissions unit(s). A significant emissions increase of a regulated NSR pollutant is projected to occur if the sum of the difference between the potential to emit (as defined in paragraph (b)(4) of this section) from each new emissions unit following completion of the project and the baseline actual emissions (as defined in paragraph (b)(48)(iii) of this section) of these units before the project equals or exceeds the significant amount for that pollutant (as defined in paragraph (b)(23) of this section).

(*e*) [Reserved]

(*f*) *Hybrid test for projects that involve multiple types of emissions units*. A significant emissions increase of a regulated NSR pollutant is projected to occur if the sum of the emissions increases for each emissions unit, using the method specified in paragraphs (a)(2)(iv)(*c*) through (*d*) of this section as applicable with respect to each emissions unit, for each type of emissions unit equals or exceeds the significant amount for that pollutant (as defined in paragraph (b)(23) of this section).

(v) For any major stationary source for a PAL for a regulated NSR pollutant, the major stationary source shall comply with the requirements under paragraph (aa) of this section.

(b) *Definitions*. For the purposes of this section:

(1)(i) *Major stationary source* means:

(*a*) Any of the following stationary sources of air pollutants which emits, or has the potential to emit, 100 tons per year or more of any regulated NSR pollutant: Fossil fuel-fired steam electric plants of more than 250 million British thermal units per hour heat input, coal cleaning plants (with thermal dryers), kraft pulp mills, portland cement plants, primary zinc smelters, iron and steel mill plants, primary aluminum ore reduction plants (with thermal dryers), primary copper smelters, municipal incinerators capable of charging more than 250 tons of refuse per day, hydrofluoric, sulfuric, and nitric acid plants, petroleum refineries, lime plants, phosphate rock processing plants, coke oven batteries, sulfur recovery plants, carbon black plants (furnace process), primary lead smelters, fuel conversion plants, sintering plants, secondary metal production plants, chemical process plants (which does not include ethanol production facilities that produce ethanol by natural fermentation included in NAICS codes 325193 or 312140), fossil-fuel boilers (or combinations thereof) totaling more than 250 million British thermal units per hour heat input, petroleum storage and transfer units with a total storage capacity exceeding 300,000 barrels, taconite ore processing plants, glass fiber processing plants, and charcoal production plants;

(*b*) Notwithstanding the stationary source size specified in paragraph (b)(1)(i) of this section, any stationary source which emits, or has the potential to emit, 250 tons per year or more of a regulated NSR pollutant; or

(*c*) Any physical change that would occur at a stationary source not otherwise qualifying under paragraph (b)(1) of this section, as a major stationary source, if the changes would constitute a major stationary source by itself.

(ii) A major source that is major for volatile organic compounds or NO_X shall be considered major for ozone.

(iii) The fugitive emissions of a stationary source shall not be included in determining for any of the purposes of this section whether it is a major stationary source, unless the source belongs to one of the following categories of stationary sources:

(*a*) Coal cleaning plants (with thermal dryers);

(*b*) Kraft pulp mills;

(*c*) Portland cement plants;

(*d*) Primary zinc smelters;

(*e*) Iron and steel mills;

(*f*) Primary aluminum ore reduction plants;

(*g*) Primary copper smelters;

(*h*) Municipal incinerators capable of charging more than 250 tons of refuse per day;

(*i*) Hydrofluoric, sulfuric, or nitric acid plants;

(*j*) Petroleum refineries;

(*k*) Lime plants;

(*l*) Phosphate rock processing plants;

(*m*) Coke oven batteries;

(*n*) Sulfur recovery plants;

(*o*) Carbon black plants (furnace process);

(*p*) Primary lead smelters;

(*q*) Fuel conversion plants;

(*r*) Sintering plants;

(*s*) Secondary metal production plants;

(*t*) Chemical process plants—The term chemical processing plant shall not include ethanol production facilities that produce ethanol by natural fermentation included in NAICS codes 325193 or 312140;

(*u*) Fossil-fuel boilers (or combination thereof) totaling more than 250 million British thermal units per hour heat input;

(*v*) Petroleum storage and transfer units with a total storage capacity exceeding 300,000 barrels;

(*w*) Taconite ore processing plants;

(*x*) Glass fiber processing plants;

(*y*) Charcoal production plants;

(*z*) Fossil fuel-fired steam electric plants of more that 250 million British thermal units per hour heat input, and

(*aa*) Any other stationary source category which, as of August 7, 1980, is being regulated under section 111 or 112 of the Act.

(2)(i) *Major modification* means any physical change in or change in the method of operation of a major stationary source that would result in: a significant emissions increase (as defined in paragraph (b)(40) of this section) of a regulated NSR pollutant (as defined in paragraph (b)(50) of this section); and a significant net emissions increase of that pollutant from the major stationary source.

(ii) Any significant emissions increase (as defined at paragraph (b)(40) of this section) from any emissions units or net emissions increase (as defined in paragraph (b)(3) of this section) at a major stationary source that is significant for volatile organic compounds or NO_X shall be considered significant for ozone.

(iii) A physical change or change in the method of operation shall not include:

(*a*) Routine maintenance, repair and replacement. Routine maintenance, repair and replacement shall include, but not be limited to, any activity(s) that meets the requirements of the equipment replacement provisions contained in paragraph (cc) of this section;

NOTE TO PARAGRAPH (b)(2)(iii)(*a*): By court order on December 24, 2003, the second sentence of this paragraph (b)(2)(iii)(a) is stayed indefinitely. The stayed provisions will become effective immediately if the court terminates the stay. At that time, EPA will publish a document in the FEDERAL REGISTER advising the public of the termination of the stay.

(*b*) Use of an alternative fuel or raw material by reason of an order under sections 2 (a) and (b) of the Energy Supply and Environmental Coordination Act of 1974 (or any superseding legislation) or by reason of a natural gas curtailment plant pursuant to the Federal Power Act;

(*c*) Use of an alternative fuel by reason of an order or rule under section 125 of the Act;

(*d*) Use of an alternative fuel at a steam generating unit to the extent that the fuel is generated from municipal solid waste;

(*e*) Use of an alternative fuel or raw material by a stationary source which:

(*1*) The source was capable of accommodating before January 6, 1975, unless such change would be prohibited under any federally enforceable permit condition which was established after January 6, 1975 pursuant to 40 CFR 52.21 or under regulations approved pursuant to 40 CFR subpart I or 40 CFR 51.166; or

(*2*) The source is approved to use under any permit issued under 40 CFR 52.21 or under regulations approved pursuant to 40 CFR 51.166;

(*f*) An increase in the hours of operation or in the production rate, unless such change would be prohibited under any federally enforceable permit condition which was established after January 6, 1975, pursuant to 40 CFR 52.21 or under regulations approved pursuant to 40 CFR subpart I or 40 CFR 51.166.

(*g*) Any change in ownership at a stationary source.

(*h*) [Reserved]

(*i*) The installation, operation, cessation, or removal of a temporary clean coal technology demonstration project, provided that the project complies with:

(*1*) The State implementation plan for the State in which the project is located, and

(*2*) Other requirements necessary to attain and maintain the national ambient air quality standards during the project and after it is terminated.

(*j*) The installation or operation of a permanent clean coal technology demonstration project that constitutes repowering, provided that the project does not result in an increase in the potential to emit of any regulated pollutant emitted by the unit. This exemption shall apply on a pollutant-by-pollutant basis.

(*k*) The reactivation of a very clean coal-fired electric utility steam generating unit.

(iv) This definition shall not apply with respect to a particular regulated NSR pollutant when the major stationary source is complying with the requirements under paragraph (aa) of this section for a PAL for that pollutant. Instead, the definition at paragraph (aa)(2)(viii) of this section shall apply.

(v) Fugitive emissions shall not be included in determining for any of the purposes of this section whether a physical change in or change in the method of operation of a major stationary source is a major modification, unless the source belongs to one of the source categories listed in paragraph (b)(1)(iii) of this section.

(3)(i) *Net emissions increase* means, with respect to any regulated NSR pollutant emitted by a major stationary source, the amount by which the sum of the following exceeds zero:

(*a*) The increase in emissions from a particular physical change or change in the method of operation at a stationary source as calculated pursuant to paragraph (a)(2)(iv) of this section; and

(*b*) Any other increases and decreases in actual emissions at the major stationary source that are contemporaneous with the particular change and are otherwise creditable. Baseline actual emissions for calculating increases and decreases under this paragraph (b)(3)(i)(*b*) shall be determined as provided in paragraph (b)(48) of this section, except that paragraphs (b)(48)(i)(*c*) and (b)(48)(ii)(*d*) of this section shall not apply.

(ii) An increase or decrease in actual emissions is contemporaneous with the increase from the particular change only if it occurs between:

(*a*) The date five years before construction on the particular change commences; and

(*b*) The date that the increase from the particular change occurs.

(iii) An increase or decrease in actual emissions is creditable only if:

(*a*) The Administrator or other reviewing authority has not relied on it in issuing a permit for the source under this section, which permit is in effect when the increase in actual emissions from the particular change occurs; and

(*b*) The increase or decrease in emissions did not occur at a Clean Unit except as provided in paragraphs (x)(8) and (y)(10) of this section.

(*c*) As it pertains to an increase or decrease in fugitive emissions (to the extent quantifiable), it occurs at an emissions unit that is part of one of the source categories listed in paragraph (b)(1)(iii) of this section or it occurs at an emission unit that is located at a major stationary source that belongs to one of the listed source categories.(iv) An increase or decrease in actual emissions of sulfur dioxide, particulate matter, or nitrogen oxides that occurs before the applicable minor source baseline date is creditable only if it is required to be considered in calculating the amount of maximum allowable increases remaining available.

(v) An increase in actual emissions is creditable only to the extent that the new level of actual emissions exceeds the old level.

(vi) A decrease in actual emissions is creditable only to the extent that:

(*a*) The old level of actual emissions or the old level of allowable emissions, whichever is lower, exceeds the new level of actual emissions;

(*b*) It is enforceable as a practical matter at and after the time that actual construction on the particular change begins.

(*c*) It has approximately the same qualitative significance for public health and welfare as that attributed to the increase from the particular change; and

(vii) [Reserved]

(viii) An increase that results from a physical change at a source occurs when the emissions unit on which construction occurred becomes operational and begins to emit a particular

pollutant. Any replacement unit that requires shakedown becomes operational only after a reasonable shakedown period, not to exceed 180 days.

(ix) Paragraph (b)(21)(ii) of this section shall not apply for determining creditable increases and decreases.

(4) *Potential to emit* means the maximum capacity of a stationary source to emit a pollutant under its physical and operational design. Any physical or operational limitation on the capacity of the source to emit a pollutant, including air pollution control equipment and restrictions on hours of operation or on the type or amount of material combusted, stored, or processed, shall be treated as part of its design if the limitation or the effect it would have on emissions is federally enforceable. Secondary emissions do not count in determining the potential to emit of a stationary source.

(5) *Stationary source* means any building, structure, facility, or installation which emits or may emit a regulated NSR pollutant.

(6)(i) *Building, structure, facility, or installation* means all of the pollutant-emitting activities which belong to the same industrial grouping, are located on one or more contiguous or adjacent properties, and are under the control of the same person (or persons under common control) except the activities of any vessel. Pollutant-emitting activities shall be considered as part of the same industrial grouping if they belong to the same ''Major Group'' (*i.e.*, which have the same first two digit code) as described in the *Standard Industrial Classification Manual, 1972*, as amended by the 1977 Supplement (U.S. Government Printing Office stock numbers 4101–0066 and 003–005–00716–0, respectively).

(ii) Notwithstanding the provisions of paragraph (b)(6)(i) of this section, *building, structure, facility, or installation* means, for onshore activities under Standard Industrial Classification (SIC) Major Group 13: Oil and Gas Extraction, all of the pollutant-emitting activities included in Major Group 13 that are located on one or more contiguous or adjacent properties, and are under the control of the same person (or persons under common control). Pollutant emitting activities shall be considered adjacent if they are located on the same surface site; or if they are located on surface sites that are located within ¼ mile of one another (measured from the center of the equipment on the surface site) and they share equipment. Shared equipment includes, but is not limited to, produced fluids storage tanks, phase separators, natural gas dehydrators or emissions control devices. Surface site, as used in this paragraph (b)(6)(ii), has the same meaning as in 40 CFR 63.761.

(7) *Emissions unit* means any part of a stationary source that emits or would have the potential to emit any regulated NSR pollutant and includes an electric utility steam generating unit as defined in paragraph (b)(31) of this section. For purposes of this section, there are two types of emissions units as described in paragraphs (b)(7)(i) and (ii) of this section.

(i) A new emissions unit is any emissions unit that is (or will be) newly constructed and that has existed for less than 2 years from the date such emissions unit first operated.

(ii) An existing emissions unit is any emissions unit that does not meet the requirements in paragraph (b)(7)(i) of this section. A replacement unit, as defined in paragraph (b)(33) of this section, is an existing emissions unit.

(8) *Construction* means any physical change or change in the method of operation (including fabrication, erection, installation, demolition, or modification of an emissions unit) that would result in a change in emissions.

(9) *Commence* as applied to construction of a major stationary source or major modification means that the owner or operator has all necessary preconstruction approvals or permits and either has:

(i) Begun, or caused to begin, a continuous program of actual on-site construction of the source, to be completed within a reasonable time; or

(ii) Entered into binding agreements or contractual obligations, which cannot be cancelled or modified without substantial loss to the owner or operator, to undertake a program of actual construction of the source to be completed within a reasonable time.

(10) *Necessary preconstruction approvals or permits* means those permits or

approvals required under Federal air quality control laws and regulations and those air quality control laws and regulations which are part of the applicable State Implementation Plan.

(11) *Begin actual construction* means, in general, initiation of physical on-site construction activities on an emissions unit which are of a permanent nature. Such activities include, but are not limited to, installation of building supports and foundations, laying underground pipework and construction of permanent storage structures. With respect to a change in method of operations, this term refers to those on-site activities other than preparatory activities which mark the initiation of the change.

(12) *Best available control technology* means an emissions limitation (including a visible emission standard) based on the maximum degree of reduction for each pollutant subject to regulation under Act which would be emitted from any proposed major stationary source or major modification which the Administrator, on a case-by-case basis, taking into account energy, environmental, and economic impacts and other costs, determines is achievable for such source or modification through application of production processes or available methods, systems, and techniques, including fuel cleaning or treatment or innovative fuel combustion techniques for control of such pollutant. In no event shall application of best available control technology result in emissions of any pollutant which would exceed the emissions allowed by any applicable standard under 40 CFR parts 60 and 61. If the Administrator determines that technological or economic limitations on the application of measurement methodology to a particular emissions unit would make the imposition of an emissions standard infeasible, a design, equipment, work practice, operational standard, or combination thereof, may be prescribed instead to satisfy the requirement for the application of best available control technology. Such standard shall, to the degree possible, set forth the emissions reduction achievable by implementation of such design, equipment, work practice or operation, and shall provide for compliance by means which achieve equivalent results.

(13)(i) *Baseline concentration* means that ambient concentration level that exists in the baseline area at the time of the applicable minor source baseline date. A baseline concentration is determined for each pollutant for which a minor source baseline date is established and shall include:

(*a*) The actual emissions, as defined in paragraph (b)(21) of this section, representative of sources in existence on the applicable minor source baseline date, except as provided in paragraph (b)(13)(ii) of this section; and

(*b*) The allowable emissions of major stationary sources that commenced construction before the major source baseline date, but were not in operation by the applicable minor source baseline date.

(ii) The following will not be included in the baseline concentration and will affect the applicable maximum allowable increase(s):

(*a*) Actual emissions, as defined in paragraph (b)(21) of this section, from any major stationary source on which construction commenced after the major source baseline date; and

(*b*) Actual emissions increases and decreases, as defined in paragraph (b)(21) of this section, at any stationary source occurring after the minor source baseline date.

(14)(i) *Major source baseline date* means:

(*a*) In the case of PM_{10} and sulfur dioxide, January 6, 1975;

(*b*) In the case of nitrogen dioxide, February 8, 1988; and

(*c*) In the case of $PM_{2.5}$, October 20, 2010.

(ii) ''Minor source baseline date'' means the earliest date after the trigger date on which a major stationary source or a major modification subject to 40 CFR 52.21 or to regulations approved pursuant to 40 CFR 51.166 submits a complete application under the relevant regulations. The trigger date is:

(*a*) In the case of PM_{10} and sulfur dioxide, August 7, 1977;

(*b*) In the case of nitrogen dioxide, February 8, 1988; and

(*c*) In the case of $PM_{2.5}$, October 20, 2011.

(iii) The baseline date is established for each pollutant for which increments or other equivalent measures have been established if:

(*a*) The area in which the proposed source or modification would construct is designated as attainment or unclassifiable under section 107(d)(1)(A)(ii) or (iii) of the Act for the pollutant on the date of its complete application under 40 CFR 52.21 or under regulations approved pursuant to 40 CFR 51.166; and

(*b*) In the case of a major stationary source, the pollutant would be emitted in significant amounts, or, in the case of a major modification, there would be a significant net emissions increase of the pollutant.

(iv) Any minor source baseline date established originally for the TSP increments shall remain in effect and shall apply for purposes of determining the amount of available PM–10 increments, except that the Administrator shall rescind a minor source baseline date where it can be shown, to the satisfaction of the Administrator, that the emissions increase from the major stationary source, or net emissions increase from the major modification, responsible for triggering that date did not result in a significant amount of PM–10 emissions.

(15)(i) *Baseline area* means any intrastate area (and every part thereof) designated as attainment or unclassifiable under section 107(d)(1)(A)(ii) or (iii) of the Act in which the major source or major modification establishing the minor source baseline date would construct or would have an air quality impact for the pollutant for which the baseline date is established, as follows: equal to or greater than 1 $\mu g/m^3$ (annual average) for SO_2, NO_2, or PM_{10}; or equal or greater than 0.3 $\mu g/m^3$ (annual average) for $PM_{2.5}$.

(ii) Area redesignations under section 107(d)(1)(A)(ii) or (iii) of the Act cannot intersect or be smaller than the area of impact of any major stationary source or major modification which:

(*a*) Establishes a minor source baseline date; or

(*b*) Is subject to 40 CFR 52.21 and would be constructed in the same state as the state proposing the redesignation.

(iii) Any baseline area established originally for the TSP increments shall remain in effect and shall apply for purposes of determining the amount of available PM–10 increments, except that such baseline area shall not remain in effect if the Administrator rescinds the corresponding minor source baseline date in accordance with paragraph (b)(14)(iv) of this section.

(16) *Allowable emissions* means the emissions rate of a stationary source calculated using the maximum rated capacity of the source (unless the source is subject to federally enforceable limits which restrict the operating rate, or hours of operation, or both) and the most stringent of the following:

(i) The applicable standards as set forth in 40 CFR parts 60 and 61;

(ii) The applicable State Implementation Plan emissions limitation, including those with a future compliance date; or

(iii) The emissions rate specified as a federally enforceable permit condition, including those with a future compliance date.

(17) *Federally enforceable* means all limitations and conditions which are enforceable by the Administrator, including those requirements developed pursuant to 40 CFR parts 60 and 61, requirements within any applicable State implementation plan, any permit requirements established pursuant to 40 CFR 52.21 or under regulations approved pursuant to 40 CFR part 51, subpart I, including operating permits issued under an EPA-approved program that is incorporated into the State implementation plan and expressly requires adherence to any permit issued under such program.

(18) *Secondary emissions* means emissions which would occur as a result of the construction or operation of a major stationary source or major modification, but do not come from the major stationary source or major modification itself. Secondary emissions include emissions from any offsite support facility which would not be constructed or increase its emissions except as a result of the construction or operation of the major stationary source or major modification. Secondary emissions do not include

any emissions which come directly from a mobile source, such as emissions from the tailpipe of a motor vehicle, from a train, or from a vessel.

(i) Emissions from ships or trains coming to or from the new or modified stationary source; and

(ii) Emissions from any offsite support facility which would not otherwise be constructed or increase its emissions as a result of the construction or operation of the major stationary source or major modification.

(19) *Innovative control technology* means any system of air pollution control that has not been adequately demonstrated in practice, but would have a substantial likelihood of achieving greater continuous emissions reduction than any control system in current practice or of achieving at least comparable reductions at lower cost in terms of energy, economics, or nonair quality environmental impacts.

(20) *Fugitive emissions* means those emissions which could not reasonably pass through a stack, chimney, vent, or other functionally equivalent opening.

(21)(i) *Actual emissions* means the actual rate of emissions of a regulated NSR pollutant from an emissions unit, as determined in accordance with paragraphs (b)(21)(ii) through (iv) of this section, except that this definition shall not apply for calculating whether a significant emissions increase has occurred, or for establishing a PAL under paragraph (aa) of this section. Instead, paragraphs (b)(41) and (b)(48) of this section shall apply for those purposes.

(ii) In general, actual emissions as of a particular date shall equal the average rate, in tons per year, at which the unit actually emitted the pollutant during a consecutive 24-month period which precedes the particular date and which is representative of normal source operation. The Administrator shall allow the use of a different time period upon a determination that it is more representative of normal source operation. Actual emissions shall be calculated using the unit's actual operating hours, production rates, and types of materials processed, stored, or combusted during the selected time period.

(iii) The Administrator may presume that source-specific allowable emissions for the unit are equivalent to the actual emissions of the unit.

(iv) For any emissions unit that has not begun normal operations on the particular date, actual emissions shall equal the potential to emit of the unit on that date.

(22) *Complete* means, in reference to an application for a permit, that the application contains all of the information necessary for processing the application.

(23)(i) Significant means, in reference to a net emissions increase or the potential of a source to emit any of the following pollutants, a rate of emissions that would equal or exceed any of the following rates:

POLLUTANT AND EMISSIONS RATE

Carbon monoxide: 100 tons per year (tpy)
Nitrogen oxides: 40 tpy
Sulfur dioxide: 40 tpy
Particulate matter: 25 tpy of particulate matter emissions
PM_{10}: 15 tpy
$PM_{2.5}$: 10 tpy of direct $PM_{2.5}$ emissions; 40 tpy of sulfur dioxide emissions; 40 tpy of nitrogen oxide emissions unless demonstrated not to be a $PM_{2.5}$ precursor under paragraph (b)(50) of this section
Ozone: 40 tpy of volatile organic compounds or nitrogen oxides
Lead: 0.6 tpy
Fluorides: 3 tpy
Sulfuric acid mist: 7 tpy
Hydrogen sulfide (H_2S): 10 tpy
Total reduced sulfur (including H_2S): 10 tpy
Reduced sulfur compounds (including H_2S): 10 tpy
Municipal waste combustor organics (measured as total tetra-through octa-chlorinated dibenzo-p-dioxins and dibenzofurans): 3.2×10^{-6} megagrams per year (3.5×10^{-6} tons per year)
Municipal waste combustor metals (measured as particulate matter): 14 megagrams per year (15 tons per year)
Municipal waste combustor acid gases (measured as sulfur dioxide and hydrogen chloride): 36 megagrams per year (40 tons per year)
Municipal solid waste landfills emissions (measured as nonmethane organic compounds): 45 megagrams per year (50 tons per year)

(ii) *Significant* means, in reference to a net emissions increase or the potential of a source to emit a regulated NSR pollutant that paragraph (b)(23)(i) of this section, does not list, any emissions rate.

(iii) Notwithstanding paragraph (b)(23)(i) of this section, *significant* means any emissions rate or any net emissions increase associated with a major stationary source or major modification, which would construct within 10 kilometers of a Class I area, and have an impact on such area equal to or greater than 1 $\mu g/m^3$, (24-hour average).

(24) *Federal Land Manager* means, with respect to any lands in the United States, the Secretary of the department with authority over such lands.

(25) *High terrain* means any area having an elevation 900 feet or more above the base of the stack of a source.

(26) *Low terrain* means any area other than high terrain.

(27) *Indian Reservation* means any federally recognized reservation established by Treaty, Agreement, executive order, or act of Congress.

(28) *Indian Governing Body* means the governing body of any tribe, band, or group of Indians subject to the jurisdiction of the United States and recognized by the United States as possessing power of self government.

(29) *Adverse impact on visibility* means visibility impairment which interferes with the management, protection, preservation or enjoyment of the visitor's visual experience of the Federal Class I area. This determination must be made on a case-by-case basis taking into account the geographic extent, intensity, duration, frequency and time of visibility impairment, and how these factors correlate with (1) times of visitor use of the Federal Class I area, and (2) the frequency and timing of natural conditions that reduce visibility.

(30) *Volatile organic compounds (VOC)* is as defined in §51.100(s) of this chapter.

(31) *Electric utility steam generating unit* means any steam electric generating unit that is constructed for the purpose of supplying more than one-third of its potential electric output capacity and more than 25 MW electrical output to any utility power distribution system for sale. Any steam supplied to a steam distribution system for the purpose of providing steam to a steam-electric generator that would produce electrical energy for sale is also considered in determining the electrical energy output capacity of the affected facility.

(32) [Reserved]

(33) *Replacement unit* means an emissions unit for which all the criteria listed in paragraphs (b)(33)(i) through (iv) of this section are met. No creditable emission reductions shall be generated from shutting down the existing emissions unit that is replaced.

(i) The emissions unit is a reconstructed unit within the meaning of §60.15(b)(1) of this chapter, or the emissions unit completely takes the place of an existing emissions unit.

(ii) The emissions unit is identical to or functionally equivalent to the replaced emissions unit.

(iii) The replacement does not alter the basic design parameters (as discussed in paragraph (cc)(2) of this section) of the process unit.

(iv) The replaced emissions unit is permanently removed from the major stationary source, otherwise permanently disabled, or permanently barred from operation by a permit that is enforceable as a practical matter. If the replaced emissions unit is brought back into operation, it shall constitute a new emissions unit.

(34) *Clean coal technology* means any technology, including technologies applied at the precombustion, combustion, or post combustion stage, at a new or existing facility which will achieve significant reductions in air emissions of sulfur dioxide or oxides of nitrogen associated with the utilization of coal in the generation of electricity, or process steam which was not in widespread use as of November 15, 1990.

(35) *Clean coal technology demonstration project* means a project using funds appropriated under the heading ''Department of Energy-Clean Coal Technology'', up to a total amount of $2,500,000,000 for commercial demonstration of clean coal technology, or similar projects funded through appropriations for the Environmental Protection Agency. The Federal contribution for a qualifying project shall be at least 20 percent of the total cost of the demonstration project.

(36) *Temporary clean coal technology demonstration project* means a clean coal technology demonstration project

that is operated for a period of 5 years or less, and which complies with the State implementation plans for the State in which the project is located and other requirements necessary to attain and maintain the national ambient air quality standards during the project and after it is terminated.

(37) (i) *Repowering* means replacement of an existing coal-fired boiler with one of the following clean coal technologies: atmospheric or pressurized fluidized bed combustion, integrated gasification combined cycle, magnetohydrodynamics, direct and indirect coal-fired turbines, integrated gasification fuel cells, or as determined by the Administrator, in consultation with the Secretary of Energy, a derivative of one or more of these technologies, and any other technology capable of controlling multiple combustion emissions simultaneously with improved boiler or generation efficiency and with significantly greater waste reduction relative to the performance of technology in widespread commercial use as of November 15, 1990.

(ii) Repowering shall also include any oil and/or gas-fired unit which has been awarded clean coal technology demonstration funding as of January 1, 1991, by the Department of Energy.

(iii) The Administrator shall give expedited consideration to permit applications for any source that satisfies the requirements of this subsection and is granted an extension under section 409 of the Clean Air Act.

(38) *Reactivation of a very clean coal-fired electric utility steam generating unit* means any physical change or change in the method of operation associated with the commencement of commercial operations by a coal-fired utility unit after a period of discontinued operation where the unit:

(i) Has not been in operation for the two-year period prior to the enactment of the Clean Air Act Amendments of 1990, and the emissions from such unit continue to be carried in the permitting authority's emissions inventory at the time of enactment;

(ii) Was equipped prior to shut-down with a continuous system of emissions control that achieves a removal efficiency for sulfur dioxide of no less than 85 percent and a removal efficiency for particulates of no less than 98 percent;

(iii) Is equipped with low-NO_X burners prior to the time of commencement of operations following reactivation; and

(iv) Is otherwise in compliance with the requirements of the Clean Air Act.

(39) *Pollution prevention* means any activity that through process changes, product reformulation or redesign, or substitution of less polluting raw materials, eliminates or reduces the release of air pollutants (including fugitive emissions) and other pollutants to the environment prior to recycling, treatment, or disposal; it does not mean recycling (other than certain ''in-process recycling'' practices), energy recovery, treatment, or disposal.

(40) *Significant emissions increase* means, for a regulated NSR pollutant, an increase in emissions that is significant (as defined in paragraph (b)(23) of this section) for that pollutant.

(41)(i) *Projected actual emissions* means the maximum annual rate, in tons per year, at which an existing emissions unit is projected to emit a regulated NSR pollutant in any one of the 5 years (12-month period) following the date the unit resumes regular operation after the project, or in any one of the 10 years following that date, if the project involves increasing the emissions unit's design capacity or its potential to emit that regulated NSR pollutant and full utilization of the unit would result in a significant emissions increase or a significant net emissions increase at the major stationary source.

(ii) In determining the projected actual emissions under paragraph (b)(41)(i) of this section (before beginning actual construction), the owner or operator of the major stationary source:

(*a*) Shall consider all relevant information, including but not limited to, historical operational data, the company's own representations, the company's expected business activity and the company's highest projections of business activity, the company's filings with the State or Federal regulatory authorities, and compliance plans under the approved State Implementation Plan; and

(*b*) Shall include fugitive emissions to the extent quantifiable, and emissions associated with startups, shutdowns, and malfunctions; and

(*c*) Shall exclude, in calculating any increase in emissions that results from he particular project, that portion of the unit's emissions following the project that an existing unit could have accommodated during the consecutive 24-month period used to establish the baseline actual emissions under paragraph (b)(48) of this section and that are also unrelated to the particular project, including any increased utilization due to product demand growth; or

(*d*) In lieu of using the method set out in paragraphs (a)(41)(ii)(*a*) through (*c*) of this section, may elect to use the emissions unit's potential to emit, in tons per year, as defined under paragraph (b)(4) of this section.

(42) [Reserved]

(43) *Prevention of Significant Deterioration (PSD) program* means the EPA-implemented major source preconstruction permit programs under this section or a major source preconstruction permit program that has been approved by the Administrator and incorporated into the State Implementation Plan pursuant to §51.166 of this chapter to implement the requirements of that section. Any permit issued under such a program is a major NSR permit.

(44) *Continuous emissions monitoring system (CEMS)* means all of the equipment that may be required to meet the data acquisition and availability requirements of this section, to sample, condition (if applicable), analyze, and provide a record of emissions on a continuous basis.

(45) *Predictive emissions monitoring system (PEMS)* means all of the equipment necessary to monitor process and control device operational parameters (for example, control device secondary voltages and electric currents) and other information (for example, gas flow rate, O_2 or CO_2 concentrations), and calculate and record the mass emissions rate (for example, lb/hr) on a continuous basis.

(46) *Continuous parameter monitoring system (CPMS)* means all of the equipment necessary to meet the data acquisition and availability requirements of this section, to monitor process and control device operational parameters (for example, control device secondary voltages and electric currents) and other information (for example, gas flow rate, O_2 or CO_2 concentrations), and to record average operational parameter value(s) on a continuous basis.

(47) *Continuous emissions rate monitoring system (CERMS)* means the total equipment required for the determination and recording of the pollutant mass emissions rate (in terms of mass per unit of time).

(48) *Baseline actual emissions* means the rate of emissions, in tons per year, of a regulated NSR pollutant, as determined in accordance with paragraphs (b)(48)(i) through (iv) of this section.

(i) For any existing electric utility steam generating unit, baseline actual emissions means the average rate, in tons per year, at which the unit actually emitted the pollutant during any consecutive 24-month period selected by the owner or operator within the 5-year period immediately preceding when the owner or operator begins actual construction of the project. The Administrator shall allow the use of a different time period upon a determination that it is more representative of normal source operation.

(*a*) The average rate shall include fugitive emissions to the extent quantifiable, and emissions associated with startups, shutdowns, and malfunctions.

(*b*) The average rate shall be adjusted downward to exclude any non-compliant emissions that occurred while the source was operating above any emission limitation that was legally enforceable during the consecutive 24-month period.

(*c*) For a regulated NSR pollutant, when a project involves multiple emissions units, only one consecutive 24-month period must be used to determine the baseline actual emissions for the emissions units being changed. A different consecutive 24-month period can be used For each regulated NSR pollutant.

(*d*) The average rate shall not be based on any consecutive 24-month period for which there is inadequate information for determining annual

emissions, in tons per year, and for adjusting this amount if required by paragraph (b)(48)(i)(*b*) of this section.

(ii) For an existing emissions unit (other than an electric utility steam generating unit), baseline actual emissions means the average rate, in tons per year, at which the emissions unit actually emitted the pollutant during any consecutive 24-month period selected by the owner or operator within the 10-year period immediately preceding either the date the owner or operator begins actual construction of the project, or the date a complete permit application is received by the Administrator for a permit required under this section or by the reviewing authority for a permit required by a plan, whichever is earlier, except that the 10-year period shall not include any period earlier than November 15, 1990.

(*a*) The average rate shall include fugitive emissions to the extent quantifiable, and emissions associated with startups, shutdowns, and malfunctions.

(*b*) The average rate shall be adjusted downward to exclude any non-compliant emissions that occurred while the source was operating above an emission limitation that was legally enforceable during the consecutive 24-month period.

(*c*) The average rate shall be adjusted downward to exclude any emissions that would have exceeded an emission limitation with which the major stationary source must currently comply, had such major stationary source been required to comply with such limitations during the consecutive 24-month period. However, if an emission limitation is part of a maximum achievable control technology standard that the Administrator proposed or promulgated under part 63 of this chapter, the baseline actual emissions need only be adjusted if the State has taken credit for such emissions reductions in an attainment demonstration or maintenance plan consistent with the requirements of § 51.165(a)(3)(ii)(G) of this chapter.

(*d*) For a regulated NSR pollutant, when a project involves multiple emissions units, only one consecutive 24-month period must be used to determine the baseline actual emissions for all the emissions units being changed. A different consecutive 24-month period can be used For each regulated NSR pollutant.

(*e*) The average rate shall not be based on any consecutive 24-month period for which there is inadequate information for determining annual emissions, in tons per year, and for adjusting this amount if required by paragraphs (b)(48)(ii)(*b*) and (*c*) of this section.

(iii) For a new emissions unit, the baseline actual emissions for purposes of determining the emissions increase that will result from the initial construction and operation of such unit shall equal zero; and thereafter, for all other purposes, shall equal the unit's potential to emit.

(iv) For a PAL for a stationary source, the baseline actual emissions shall be calculated for existing electric utility steam generating units in accordance with the procedures contained in paragraph (b)(48)(i) of this section, for other existing emissions units in accordance with the procedures contained in paragraph (b)(48)(ii) of this section, and for a new emissions unit in accordance with the procedures contained in paragraph (b)(48)(iii) of this section.

(49) *Subject to regulation* means, for any air pollutant, that the pollutant is subject to either a provision in the Clean Air Act, or a nationally-applicable regulation codified by the Administrator in subchapter C of this chapter, that requires actual control of the quantity of emissions of that pollutant, and that such a control requirement has taken effect and is operative to control, limit or restrict the quantity of emissions of that pollutant released from the regulated activity. Except that:

(i) *Greenhouse gases (GHGs),* the air pollutant defined in § 86.1818–12(a) of this chapter as the aggregate group of six greenhouse gases: Carbon dioxide, nitrous oxide, methane, hydrofluorocarbons, perfluorocarbons, and sulfur hexafluoride, shall not be subject to regulation except as provided in paragraphs (b)(49)(iv) through (v) of this section and shall not be subject to regulation if the stationary source maintains its total source-wide emissions below the GHG PAL level,

meets the requirements in paragraphs (aa)(1) through (15) of this section, and complies with the PAL permit containing the GHG PAL.

(ii) For purposes of paragraphs (b)(49)(iii) through (v) of this section, the term tpy *CO_2 equivalent emissions (CO_2e)* shall represent an amount of GHGs emitted, and shall be computed as follows:

(*a*) Multiplying the mass amount of emissions (tpy), for each of the six greenhouse gases in the pollutant GHGs, by the gas's associated global warming potential published at Table A–1 to subpart A of part 98 of this chapter—Global Warming Potentials. For purposes of this paragraph, prior to July 21, 2014, the mass of the greenhouse gas carbon dioxide shall not include carbon dioxide emissions resulting from the combustion or decomposition of non-fossilized and biodegradable organic material originating from plants, animals, or micro-organisms (including products, by-products, residues and waste from agriculture, forestry and related industries as well as the non-fossilized and biodegradable organic fractions of industrial and municipal wastes, including gases and liquids recovered from the decomposition of non-fossilized and biodegradable organic material).

(*b*) Sum the resultant value from paragraph (b)(49)(ii)(*a*) of this section for each gas to compute a tpy CO_2e.

(iii) The term *emissions increase* as used in paragraphs (b)(49)(iv) through (v) of this section shall mean that both a significant emissions increase (as calculated using the procedures in paragraph (a)(2)(iv) of this section) and a significant net emissions increase (as defined in paragraphs (b)(3) and (b)(23) of this section) occur. For the pollutant GHGs, an emissions increase shall be based on tpy CO_2e, and shall be calculated assuming the pollutant GHGs is a regulated NSR pollutant, and ''significant'' is defined as 75,000 tpy CO_2e instead of applying the value in paragraph (b)(23)(ii) of this section.

(iv) Beginning January 2, 2011, the pollutant GHGs is subject to regulation if:

(*a*) The stationary source is a new major stationary source for a regulated NSR pollutant that is not GHGs, and also will emit or will have the potential to emit 75,000 tpy CO_2e or more; or

(*b*) The stationary source is an existing major stationary source for a regulated NSR pollutant that is not GHGs, and also will have an emissions increase of a regulated NSR pollutant, and an emissions increase of 75,000 tpy CO_2e or more; and,

(50) *Regulated NSR pollutant*, for purposes of this section, means the following:

(i) Any pollutant for which a national ambient air quality standard has been promulgated. This includes, but is not limited to, the following:

(*a*) $PM_{2.5}$ emissions and PM_{10} emissions shall include gaseous emissions from a source or activity, which condense to form particulate matter at ambient temperatures. On or after January 1, 2011, such condensable particulate matter shall be accounted for in applicability determinations and in establishing emissions limitations for $PM_{2.5}$ and PM_{10} in PSD permits. Compliance with emissions limitations for $PM_{2.5}$ and PM_{10} issued prior to this date shall not be based on condensable particulate matter unless required by the terms and conditions of the permit or the applicable implementation plan. Applicability determinations made prior to this date without accounting for condensable particulate matter shall not be considered in violation of this section unless the applicable implementation plan required condensable particulate matter to be included.

(*b*) Any pollutant identified under this paragraph (b)(50)(i)(*b*) as a constituent or precursor for a pollutant for which a national ambient air quality standard has been promulgated. Precursors identified by the Administrator for purposes of NSR are the following:

(*1*) Volatile organic compounds and nitrogen oxides are precursors to ozone in all attainment and unclassifiable areas.

(*2*) Sulfur dioxide is a precursor to $PM_{2.5}$ in all attainment and unclassifiable areas.

(*3*) Nitrogen oxides are presumed to be precursors to $PM_{2.5}$ in all attainment and unclassifiable areas, unless

the State demonstrates to the Administrator's satisfaction or EPA demonstrates that emissions of nitrogen oxides from sources in a specific area are not a significant contributor to that area's ambient $PM_{2.5}$ concentrations.

(*4*) Volatile organic compounds are presumed not to be precursors to $PM_{2.5}$ in any attainment or unclassifiable area, unless the State demonstrates to the Administrator's satisfaction or EPA demonstrates that emissions of volatile organic compounds from sources in a specific area are a significant contributor to that area's ambient $PM_{2.5}$ concentrations.

(ii) Any pollutant that is subject to any standard promulgated under section 111 of the Act;

(iii) Any Class I or II substance subject to a standard promulgated under or established by title VI of the Act;

(iv) Any pollutant that otherwise is subject to regulation under the Act as defined in paragraph (b)(49) of this section.

(v) Notwithstanding paragraphs (b)(50)(i) through (iv) of this section, the term *regulated NSR pollutant* shall not include any or all hazardous air pollutants either listed in section 112 of the Act, or added to the list pursuant to section 112(b)(2) of the Act, and which have not been delisted pursuant to section 112(b)(3) of the Act, unless the listed hazardous air pollutant is also regulated as a constituent or precursor of a general pollutant listed under section 108 of the Act.

(51) *Reviewing authority* means the State air pollution control agency, local agency, other State agency, Indian tribe, or other agency authorized by the Administrator to carry out a permit program under § 51.165 and § 51.166 of this chapter, or the Administrator in the case of EPA-implemented permit programs under this section.

(52) *Project* means a physical change in, or change in the method of operation of, an existing major stationary source.

(53) *Lowest achievable emission rate (LAER)* is as defined in § 51.165(a)(1)(xiii) of this chapter.

(54) *Reasonably available control technology (RACT)* is as defined in § 51.100(o) of this chapter.

(55)(i) In general, *process unit* means any collection of structures and/or equipment that processes, assembles, applies, blends, or otherwise uses material inputs to produce or store an intermediate or a completed product. A single stationary source may contain more than one process unit, and a process unit may contain more than one emissions unit.

(ii) Pollution control equipment is not part of the process unit, unless it serves a dual function as both process and control equipment. Administrative and warehousing facilities are not part of the process unit.

(iii) For replacement cost purposes, components shared between two or more process units are proportionately allocated based on capacity.

(iv) The following list identifies the process units at specific categories of stationary sources.

(*a*) For a steam electric generating facility, the process unit consists of those portions of the plant that contribute directly to the production of electricity. For example, at a pulverized coal-fired facility, the process unit would generally be the combination of those systems from the coal receiving equipment through the emission stack (excluding post-combustion pollution controls), including the coal handling equipment, pulverizers or coal crushers, feedwater heaters, ash handling, boiler, burners, turbine-generator set, condenser, cooling tower, water treatment system, air preheaters, and operating control systems. Each separate generating unit is a separate process unit.

(*b*) For a petroleum refinery, there are several categories of process units: those that separate and/or distill petroleum feedstocks; those that change molecular structures; petroleum treating processes; auxiliary facilities, such as steam generators and hydrogen production units; and those that load, unload, blend or store intermediate or completed products.

(*c*) For an incinerator, the process unit would consist of components from the feed pit or refuse pit to the stack, including conveyors, combustion devices, heat exchangers and steam generators, quench tanks, and fans.

NOTE TO PARAGRAPH (b)(55): By a court order on December 24, 2003, this paragraph (b)(55) is stayed indefinitely. The stayed provisions will become effective immediately if the court terminates the stay. At that time, EPA will publish a document in the FEDERAL REGISTER advising the public of the termination of the stay.

(56) *Functionally equivalent component* means a component that serves the same purpose as the replaced component.

NOTE TO PARAGRAPH (b)(56): By a court order on December 24, 2003, this paragraph (b)(56) is stayed indefinitely. The stayed provisions will become effective immediately if the court terminates the stay. At that time, EPA will publish a document in the FEDERAL REGISTER advising the public of the termination of the stay.

(57) *Fixed capital cost* means the capital needed to provide all the depreciable components. ''Depreciable components'' refers to all components of fixed capital cost and is calculated by subtracting land and working capital from the total capital investment, as defined in paragraph (b)(58) of this section.

NOTE TO PARAGRAPH (b)(57): By a court order on December 24, 2003, this paragraph (b)(57) is stayed indefinitely. The stayed provisions will become effective immediately if the court terminates the stay. At that time, EPA will publish a document in the FEDERAL REGISTER advising the public of the termination of the stay.

(58) *Total capital investment* means the sum of the following: all costs required to purchase needed process equipment (purchased equipment costs); the costs of labor and materials for installing that equipment (direct installation costs); the costs of site preparation and buildings; other costs such as engineering, construction and field expenses, fees to contractors, startup and performance tests, and contingencies (indirect installation costs); land for the process equipment; and working capital for the process equipment.

NOTE TO PARAGRAPH (b)(58): By a court order on December 24, 2003, this paragraph (b)(58) is stayed indefinitely. The stayed provisions will become effective immediately if the court terminates the stay. At that time, EPA will publish a document in the FEDERAL REGISTER advising the public of the termination of the stay.

(c) *Ambient air increments*. In areas designated as Class I, II or III, increases in pollutant concentration over the baseline concentration shall be limited to the following:

Pollutant	Maximum allowable increase (micrograms per cubic meter)
Class I Area	
$PM_{2.5}$:	
Annual arithmetic mean	1
24-hr maximum	2
PM_{10}:	
Annual arithmetic mean	4
24-hr maximum	8
Sulfur dioxide:	
Annual arithmetic mean	2
24-hr maximum	5
3-hr maximum	25
Nitrogen dioxide:	
Annual arithmetic mean	2.5
Class II Area	
$PM_{2.5}$:	
Annual arithmetic mean	4
24-hr maximum	9
PM_{10}:	
Annual arithmetic mean	17
24-hr maximum	30
Sulfur dioxide:	
Annual arithmetic mean	20
24-hr maximum	91
3-hr maximum	512
Nitrogen dioxide:	
Annual arithmetic mean	25
Class III Area	
$PM_{2.5}$:	
Annual arithmetic mean	8
24-hr maximum	18
PM_{10}:	
Annual arithmetic mean	34
24-hr maximum	60
Sulfur dioxide:	
Annual arithmetic mean	40
24-hr maximum	182
3-hr maximum	700
Nitrogen dioxide:	
Annual arithmetic mean	50

For any period other than an annual period, the applicable maximum allowable increase may be exceeded during one such period per year at any one location.

(d) *Ambient air ceilings*. No concentration of a pollutant shall exceed:

(1) The concentration permitted under the national secondary ambient air quality standard, or

(2) The concentration permitted under the national primary ambient air quality standard, whichever concentration is lowest for the pollutant for a period of exposure.

(e) *Restrictions on area classifications.* (1) All of the following areas which were in existence on August 7, 1977, shall be Class I areas and may not be redesignated:

(i) International parks,

(ii) National wilderness areas which exceed 5,000 acres in size,

(iii) National memorial parks which exceed 5,000 acres in size, and

(iv) National parks which exceed 6,000 acres in size.

(2) Areas which were redesignated as Class I under regulations promulgated before August 7, 1977, shall remain Class I, but may be redesignated as provided in this section.

(3) Any other area, unless otherwise specified in the legislation creating such an area, is initially designated Class II, but may be redesignated as provided in this section.

(4) The following areas may be redesignated only as Class I or II:

(i) An area which as of August 7, 1977, exceeded 10,000 acres in size and was a national monument, a national primitive area, a national preserve, a national recreational area, a national wild and scenic river, a national wildlife refuge, a national lakeshore or seashore; and

(ii) A national park or national wilderness area established after August 7, 1977, which exceeds 10,000 acres in size.

(f) [Reserved]

(g) *Redesignation.* (1) All areas (except as otherwise provided under paragraph (e) of this section) are designated Class II as of December 5, 1974. Redesignation (except as otherwise precluded by paragraph (e) of this section) may be proposed by the respective States or Indian Governing Bodies, as provided below, subject to approval by the Administrator as a revision to the applicable State implementation plan.

(2) The State may submit to the Administrator a proposal to redesignate areas of the State Class I or Class II provided that:

(i) At least one public hearing has been held in accordance with procedures established in § 51.102 of this chapter;

(ii) Other States, Indian Governing Bodies, and Federal Land Managers whose lands may be affected by the proposed redesignation were notified at least 30 days prior to the public hearing;

(iii) A discussion of the reasons for the proposed redesignation, including a satisfactory description and analysis of the health, environmental, economic, social and energy effects of the proposed redesignation, was prepared and made available for public inspection at least 30 days prior to the hearing and the notice announcing the hearing contained appropriate notification of the availability of such discussion;

(iv) Prior to the issuance of notice respecting the redesignation of an area that includes any Federal lands, the State has provided written notice to the appropriate Federal Land Manager and afforded adequate opportunity (not in excess of 60 days) to confer with the State respecting the redesignation and to submit written comments and recommendations. In redesignating any area with respect to which any Federal Land Manager had submitted written comments and recommendations, the State shall have published a list of any inconsistency between such redesignation and such comments and recommendations (together with the reasons for making such redesignation against the recommendation of the Federal Land Manager); and

(v) The State has proposed the redesignation after consultation with the elected leadership of local and other substate general purpose governments in the area covered by the proposed redesignation.

(3) Any area other than an area to which paragraph (e) of this section refers may be redesignated as Class III if—

(i) The redesignation would meet the requirements of paragraph (g)(2) of this section;

(ii) The redesignation, except any established by an Indian Governing Body, has been specifically approved by the Governor of the State, after consultation with the appropriate committees of the legislature, if it is in session, or with the leadership of the legislature, if it is not in session (unless State law provides that the redesignation must be specifically approved by State legislation) and if general purpose units of local government representing a majority of the residents of the area to be

redesignated enact legislation or pass resolutions concurring in the redesignation:

(iii) The redesignation would not cause, or contribute to, a concentration of any air pollutant which would exceed any maximum allowable increase permitted under the classification of any other area or any national ambient air quality standard; and

(iv) Any permit application for any major stationary source or major modification, subject to review under paragraph (l) of this section, which could receive a permit under this section only if the area in question were redesignated as Class III, and any material submitted as part of that application, were available insofar as was practicable for public inspection prior to any public hearing on redesignation of the area as Class III.

(4) Lands within the exterior boundaries of Indian Reservations may be redesignated only by the appropriate Indian Governing Body. The appropriate Indian Governing Body may submit to the Administrator a proposal to redesignate areas Class I, Class II, or Class III: *Provided*, That:

(i) The Indian Governing Body has followed procedures equivalent to those required of a State under paragraphs (g)(2), (g)(3)(iii), and (g)(3)(iv) of this section; and

(ii) Such redesignation is proposed after consultation with the State(s) in which the Indian Reservation is located and which border the Indian Reservation.

(5) The Administrator shall disapprove, within 90 days of submission, a proposed redesignation of any area only if he finds, after notice and opportunity for public hearing, that such redesignation does not meet the procedural requirements of this paragraph or is inconsistent with paragraph (e) of this section. If any such disapproval occurs, the classification of the area shall be that which was in effect prior to the redesignation which was disapproved.

(6) If the Administrator disapproves any proposed redesignation, the State or Indian Governing Body, as appropriate, may resubmit the proposal after correcting the deficiencies noted by the Administrator.

(h) *Stack heights.* (1) The degree of emission limitation required for control of any air pollutant under this section shall not be affected in any manner by—

(i) So much of the stack height of any source as exceeds good engineering practice, or

(ii) Any other dispersion technique.

(2) Paragraph (h)(1) of this section shall not apply with respect to stack heights in existence before December 31, 1970, or to dispersion techniques implemented before then.

(i) *Exemptions.* (1) The requirements of paragraphs (j) through (r) of this section shall not apply to a particular major stationary source or major modification, if;

(i) Construction commenced on the source or modification before August 7, 1977. The regulations at 40 CFR 52.21 as in effect before August 7, 1977, shall govern the review and permitting of any such source or modification; or

(ii) The source or modification was subject to the review requirements of 40 CFR 52.21(d)(1) as in effect before March 1, 1978, and the owner or operator:

(*a*) Obtained under 40 CFR 52.21 a final approval effective before March 1, 1978;

(*b*) Commenced construction before March 19, 1979; and

(*c*) Did not discontinue construction for a period of 18 months or more and completed construction within a reasonable time; or

(iii) The source or modification was subject to 40 CFR 52.21 as in effect before March 1, 1978, and the review of an application for approval for the stationary source or modification under 40 CFR 52.21 would have been completed by March 1, 1978, but for an extension of the public comment period pursuant to a request for such an extension. In such a case, the application shall continue to be processed, and granted or denied, under 40 CFR 52.21 as in effect prior to March 1, 1978; or

(iv) The source or modification was not subject to 40 CFR 52.21 as in effect before March 1, 1978, and the owner or operator:

(*a*) Obtained all final Federal, state and local preconstruction approvals or permits necessary under the applicable

State Implementation Plan before March 1, 1978;

(*b*) Commenced construction before March 19, 1979; and

(*c*) Did not discontinue construction for a period of 18 months or more and completed construction within a reasonable time; or

(v) The source or modification was not subject to 40 CFR 52.21 as in effect on June 19, 1978 or under the partial stay of regulations published on February 5, 1980 (45 FR 7800), and the owner or operator:

(*a*) Obtained all final Federal, state and local preconstruction approvals or permits necessary under the applicable State Implementation Plan before August 7, 1980;

(*b*) Commenced construction within 18 months from August 7, 1980, or any earlier time required under the applicable State Implementation Plan; and

(*c*) Did not discontinue construction for a period of 18 months or more and completed construction within a reasonable time; or

(vi) The source or modification would be a nonprofit health or nonprofit educational institution, or a major modification would occur at such an institution, and the governor of the state in which the source or modification would be located requests that it be exempt from those requirements; or

(vii) The source or modification would be a major stationary source or major modification only if fugitive emissions, to the extent quantifiable, are considered in calculating the potential to emit of the stationary source or modification and the source does not belong to any of the following categories:

(*a*) Coal cleaning plants (with thermal dryers);

(*b*) Kraft pulp mills;

(*c*) Portland cement plants;

(*d*) Primary zinc smelters;

(*e*) Iron and steel mills;

(*f*) Primary aluminum ore reduction plants;

(*g*) Primary copper smelters;

(*h*) Municipal incinerators capable of charging more than 250 tons of refuse per day;

(*i*) Hydrofluoric, sulfuric, or nitric acid plants;

(*j*) Petroleum refineries;

(*k*) Lime plants;

(*l*) Phosphate rock processing plants;

(*m*) Coke oven batteries;

(*n*) Sulfur recovery plants;

(*o*) Carbon black plants (furnace process);

(*p*) Primary lead smelters;

(*q*) Fuel conversion plants;

(*r*) Sintering plants;

(*s*) Secondary metal production plants;

(*t*) Chemical process plants—The term chemical processing plant shall not include ethanol production facilities that produce ethanol by natural fermentation included in NAICS codes 325193 or 312140;

(*u*) Fossil-fuel boilers (or combination thereof) totaling more than 250 million British thermal units per hour heat input;

(*v*) Petroleum storage and transfer units with a total storage capacity exceeding 300,000 barrels;

(*w*) Taconite ore processing plants;

(*x*) Glass fiber processing plants;

(*y*) Charcoal production plants;

(*z*) Fossil fuel-fired steam electric plants of more than 250 million British thermal units per hour heat input;

(*aa*) Any other stationary source category which, as of August 7, 1980, is being regulated under section 111 or 112 of the Act; or

(viii) The source is a portable stationary source which has previously received a permit under this section, and

(*a*) The owner or operator proposes to relocate the source and emissions of the source at the new location would be temporary; and

(*b*) The emissions from the source would not exceed its allowable emissions; and

(*c*) The emissions from the source would impact no Class I area and no area where an applicable increment is known to be violated; and

(*d*) Reasonable notice is given to the Administrator prior to the relocation identifying the proposed new location and the probable duration of operation at the new location. Such notice shall be given to the Administrator not less than 10 days in advance of the proposed relocation unless a different time duration is previously approved by the Administrator.

(ix) The source or modification was not subject to §52.21, with respect to particulate matter, as in effect before July 31, 1987, and the owner or operator:

(*a*) Obtained all final Federal, State, and local preconstruction approvals or permits necessary under the applicable State implementation plan before July 31, 1987;

(*b*) Commenced construction within 18 months after July 31, 1987, or any earlier time required under the State implementation plan; and

(*c*) Did not discontinue construction for a period of 18 months or more and completed construction within a reasonable period of time.

(x) The source or modification was subject to 40 CFR 52.21, with respect to particulate matter, as in effect before July 31, 1987 and the owner or operator submitted an application for a permit under this section before that date, and the Administrator subsequently determines that the application as submitted was complete with respect to the particular matter requirements then in effect in the section. Instead, the requirements of paragraphs (j) through (r) of this section that were in effect before July 31, 1987 shall apply to such source or modification.

(2) The requirements of paragraphs (j) through (r) of this section shall not apply to a major stationary source or major modification with respect to a particular pollutant if the owner or operator demonstrates that, as to that pollutant, the source or modification is located in an area designated as nonattainment under section 107 of the Act. Nonattainment designations for revoked NAAQS, as contained in 40 CFR part 81, shall not be viewed as current designations under section 107 of the Act for purposes of determining the applicability of paragraphs (j) through (r) of this section to a major stationary source or major modification after the revocation of that NAAQS is effective.

(3) The requirements of paragraphs (k), (m) and (o) of this section shall not apply to a major stationary source or major modification with respect to a particular pollutant, if the allowable emissions of that pollutant from the source, or the net emissions increase of that pollutant from the modification:

(i) Would impact no Class I area and no area where an applicable increment is known to be violated, and

(ii) Would be temporary.

(4) The requirements of paragraphs (k), (m) and (o) of this section as they relate to any maximum allowable increase for a Class II area shall not apply to a major modification at a stationary source that was in existence on March 1, 1978, if the net increase in allowable emissions of each regulated NSR pollutant from the modification after the application of best available control technology would be less than 50 tons per year.

(5) The Administrator may exempt a stationary source or modification from the requirements of paragraph (m) of this section, with respect to monitoring for a particular pollutant if:

(i) The emissions increase of the pollutant from the new source or the net emissions increase of the pollutant from the modification would cause, in any area, air quality impacts less than the following amounts:

(*a*) Carbon monoxide—575 μg/m^3, 8-hour average;

(*b*) Nitrogen dioxide—14 μg/m^3, annual average;

(*c*) $PM_{2.5}$—0 μg/m^3;

(*c*) Note to paragraph (i)(5)(i)(*c*): In accordance with *Sierra Club* v. *EPA*, 706 F.3d 428 (DC Cir. 2013), no exemption is available with regard to $PM_{2.5}$.

(*d*) PM_{10}—10 μg/m^3, 24-hour average;

(*e*) Sulfur dioxide—13 μg/m^3, 24-hour average;

(*f*) Ozone;

(*g*) Lead—0.1 μg/m^3, 3-month average;

(*h*) Fluorides—0.25 μg/m^3, 24-hour average;

(*i*) Total reduced sulfur—10 μg/m^3, 1-hour average;

(*j*) Hydrogen sulfide—0.2 μg/m^3, 1-hour average;

(*k*) Reduced sulfur compounds—10 μg/m^3, 1-hour average; or

NOTE TO PARAGRAPH (c)(50)(i)(f): No *de minimis* air quality level is provided for ozone. However, any net emissions increase of 100 tons per year or more of volatile organic compounds or nitrogen oxides subject to PSD would be required to perform an ambient impact analysis, including the gathering of ambient air quality data.

(ii) The concentrations of the pollutant in the area that the source or modification would affect are less than

the concentrations listed in paragraph (i)(5)(i) of this section; or

(iii) The pollutant is not listed in paragraph (i)(5)(i) of this section.

(6) The requirements for best available control technology in paragraph (j) of this section and the requirements for air quality analyses in paragraph (m)(1) of this section, shall not apply to a particular stationary source or modification that was subject to 40 CFR 52.21 as in effect on June 19, 1978, if the owner or operator of the source or modification submitted an application for a permit under those regulations before August 7, 1980, and the Administrator subsequently determines that the application as submitted before that date was complete. Instead, the requirements at 40 CFR 52.21(j) and (n) as in effect on June 19, 1978 apply to any such source or modification.

(7)(i) The requirements for air quality monitoring in paragraphs (m)(1) (ii) through (iv) of this section shall not apply to a particular source or modification that was subject to 40 CFR 52.21 as in effect on June 19, 1978, if the owner or operator of the source or modification submits an application for a permit under this section on or before June 8, 1981, and the Administrator subsequently determines that the application as submitted before that date was complete with respect to the requirements of this section other than those in paragraphs (m)(1) (ii) through (iv) of this section, and with respect to the requirements for such analyses at 40 CFR 52.21(m)(2) as in effect on June 19, 1978. Instead, the latter requirements shall apply to any such source or modification.

(ii) The requirements for air quality monitoring in paragraphs (m)(1) (ii) through (iv) of this section shall not apply to a particular source or modification that was not subject to 40 CFR 52.21 as in effect on June 19, 1978, if the owner or operator of the source or modification submits an application for a permit under this section on or before June 8, 1981, and the Administrator subsequently determines that the application as submitted before that date was complete, except with respect to the requirements in paragraphs (m)(1) (ii) through (iv).

(8)(i) At the discretion of the Administrator, the requirements for air quality monitoring of PM_{10} in paragraphs (m)(1) (i)–(iv) of this section may not apply to a particular source or modification when the owner or operator of the source or modification submits an application for a permit under this section on or before June 1, 1988 and the Administrator subsequently determines that the application as submitted before that date was complete, except with respect to the requirements for monitoring particulate matter in paragraphs (m)(1) (i)–(iv).

(ii) The requirements for air quality monitoring pf PM_{10} in paragraphs (m)(1), (ii) and (iv) and (m)(3) of this section shall apply to a particular source or modification if the owner or operator of the source or modification submits an application for a permit under this section after June 1, 1988 and no later than December 1, 1988. The data shall have been gathered over at least the period from February 1, 1988 to the date the application becomes otherwise complete in accordance with the provisions set forth under paragraph (m)(1)(viii) of this section, except that if the Administrator determines that a complete and adequate analysis can be accomplished with monitoring data over a shorter period (not to be less than 4 months), the data that paragraph (m)(1)(iii) requires shall have been gathered over a shorter period.

(9) The requirements of paragraph (k)(1)(ii) of this section shall not apply to a stationary source or modification with respect to any maximum allowable increase for nitrogen oxides if the owner or operator of the source or modification submitted an application for a permit under this section before the provisions embodying the maximum allowable increase took effect as part of the applicable implementation plan and the Administrator subsequently determined that the application as submitted before that date was complete.

(10) The requirements in paragraph (k)(1)(ii) of this section shall not apply to a stationary source or modification with respect to any maximum allowable increase for PM–10 if (i) the owner

or operator of the source or modification submitted an application for a permit under this section before the provisions embodying the maximum allowable increases for PM–10 took effect in an implementation plan to which this section applies, and (ii) the Administrator subsequently determined that the application as submitted before that date was otherwise complete. Instead, the requirements in paragraph (k)(1)(ii) shall apply with respect to the maximum allowable increases for TSP as in effect on the date the application was submitted.

(11) The requirements of paragraph (k)(1) of this section shall not apply to a stationary source or modification with respect to the national ambient air quality standards for $PM_{2.5}$ in effect on March 18, 2013 if:

(i) The Administrator has determined a permit application subject to this section to be complete on or before December 14, 2012. Instead, the requirements in paragraph (k)(1) of this section shall apply with respect to the national ambient air quality standards for $PM_{2.5}$ in effect at the time the Administrator determined the permit application to be complete; or

(ii) The Administrator has first published before March 18, 2013 a public notice that a draft permit subject to this section has been prepared. Instead, the requirements in paragraph (k)(1) of this section shall apply with respect to the national ambient air quality standards for $PM_{2.5}$ in effect on the date the Administrator first published a public notice that a draft permit has been prepared.

(12) The requirements of paragraph (k)(1) of this section shall not apply to a permit application for a stationary source or modification with respect to the revised national ambient air quality standards for ozone published on October 26, 2015 if:

(i) The Administrator has determined the permit application subject to this section to be complete on or before October 1, 2015. Instead, the requirements in paragraph (k)(1) of this section shall apply with respect to the national ambient air quality standards for ozone in effect at the time the Administrator determined the permit application to be complete; or

(ii) The Administrator has first published before December 28, 2015 a public notice of a preliminary determination or draft permit for the permit application subject to this section. Instead, the requirements in paragraph (k)(1) of this section shall apply with respect to the national ambient air quality standards for ozone in effect on the date the Administrator first published a public notice of a preliminary determination or draft permit.

(j) *Control technology review.* (1) A major stationary source or major modification shall meet each applicable emissions limitation under the State Implementation Plan and each applicable emissions standard and standard of performance under 40 CFR parts 60 and 61.

(2) A new major stationary source shall apply best available control technology for each regulated NSR pollutant that it would have the potential to emit in significant amounts.

(3) A major modification shall apply best available control technology for each regulated NSR pollutant for which it would result in a significant net emissions increase at the source. This requirement applies to each proposed emissions unit at which a net emissions increase in the pollutant would occur as a result of a physical change or change in the method of operation in the unit.

(4) For phased construction projects, the determination of best available control technology shall be reviewed and modified as appropriate at the latest reasonable time which occurs no later than 18 months prior to commencement of construction of each independent phase of the project. At such time, the owner or operator of the applicable stationary source may be required to demonstrate the adequacy of any previous determination of best available control technology for the source.

(k) *Source impact analysis*—(1) *Required demonstration.* The owner or operator of the proposed source or modification shall demonstrate that allowable emission increases from the proposed source or modification, in conjunction with all other applicable emissions increases or reductions (including secondary emissions), would

not cause or contribute to air pollution in violation of:

(i) Any national ambient air quality standard in any air quality control region; or

(ii) Any applicable maximum allowable increase over the baseline concentration in any area.

(2) [Reserved]

(l) *Air quality models.* (1) All estimates of ambient concentrations required under this paragraph shall be based on applicable air quality models, data bases, and other requirements specified in appendix W of part 51 of this chapter (Guideline on Air Quality Models).

(2) Where an air quality model specified in appendix W of part 51 of this chapter (Guideline on Air Quality Models) is inappropriate, the model may be modified or another model substituted. Such a modification or substitution of a model may be made on a case-by-case basis or, where appropriate, on a generic basis for a specific state program. Written approval of the Administrator must be obtained for any modification or substitution. In addition, use of a modified or substituted model must be subject to notice and opportunity for public comment under procedures developed in accordance with paragraph (q) of this section.

(m) *Air quality analysis*—(1) *Preapplication analysis.* (i) Any application for a permit under this section shall contain an analysis of ambient air quality in the area that the major stationary source or major modification would affect for each of the following pollutants:

(*a*) For the source, each pollutant that it would have the potential to omit in a significant amount;

(*b*) For the modification, each pollutant for which it would result in a significant net emissions increase.

(ii) With respect to any such pollutant for which no National Ambient Air Quality Standard exists, the analysis shall contain such air quality monitoring data as the Administrator determines is necessary to assess ambient air quality for that pollutant in any area that the emissions of that pollutant would affect.

(iii) With respect to any such pollutant (other than nonmethane hydrocarbons) for which such a standard does exist, the analysis shall contain continuous air quality monitoring data gathered for purposes of determining whether emissions of that pollutant would cause or contribute to a violation of the standard or any maximum allowable increase.

(iv) In general, the continuous air quality monitoring data that is required shall have been gathered over a period of at least one year and shall represent at least the year preceding receipt of the application, except that, if the Administrator determines that a complete and adequate analysis can be accomplished with monitoring data gathered over a period shorter than one year (but not to be less than four months), the data that is required shall have been gathered over at least that shorter period.

(v) For any application which becomes complete, except as to the requirements of paragraphs (m)(1) (iii) and (iv) of this section, between June 8, 1981, and February 9, 1982, the data that paragraph (m)(1)(iii) of this section, requires shall have been gathered over at least the period from February 9, 1981, to the date the application becomes otherwise complete, except that:

(*a*) If the source or modification would have been major for that pollutant under 40 CFR 52.21 as in effect on June 19, 1978, any monitoring data shall have been gathered over at least the period required by those regulations.

(*b*) If the Administrator determines that a complete and adequate analysis can be accomplished with monitoring data over a shorter period (not to be less than four months), the data that paragraph (m)(1)(iii) of this section, requires shall have been gathered over at least that shorter period.

(*c*) If the monitoring data would relate exclusively to ozone and would not have been required under 40 CFR 52.21 as in effect on June 19, 1978, the Administrator may waive the otherwise applicable requirements of this paragraph (v) to the extent that the applicant shows that the monitoring data would be unrepresentative of air quality over a full year.

(vi) The owner or operator of a proposed stationary source or modification of volatile organic compounds who

satisfies all conditions of 40 CFR part 51 Appendix S, section IV may provide post-approval monitoring data for ozone in lieu of providing preconstruction data as required under paragraph (m)(1) of this section.

(vii) For any application that becomes complete, except as to the requirements of paragraphs (m)(1) (iii) and (iv) pertaining to PM_{10}, after December 1, 1988 and no later than August 1, 1989 the data that paragraph (m)(1)(iii) requires shall have been gathered over at least the period from August 1, 1988 to the date the application becomes otherwise complete, except that if the Administrator determines that a complete and adequate analysis can be accomplished with monitoring data over a shorter period (not to be less than 4 months), the data that paragraph (m)(1)(iii) requires shall have been gathered over that shorter period.

(viii) With respect to any requirements for air quality monitoring of PM_{10} under paragraphs (i)(11) (i) and (ii) of this section the owner or operator of the source or modification shall use a monitoring method approved by the Administrator and shall estimate the ambient concentrations of PM_{10} using the data collected by such approved monitoring method in accordance with estimating procedures approved by the Administrator.

(2) Post-construction monitoring. The owner or operator of a major stationary source or major modification shall, after construction of the stationary source or modification, conduct such ambient monitoring as the Administrator determines is necessary to determine the effect emissions from the stationary source or modification may have, or are having, on air quality in any area.

(3) Operations of monitoring stations. The owner or operator of a major stationary source or major modification shall meet the requirements of Appendix B to part 58 of this chapter during the operation of monitoring stations for purposes of satisfying paragraph (m) of this section.

(n) *Source information.* The owner or operator of a proposed source or modification shall submit all information necessary to perform any analysis or make any determination required under this section.

(1) With respect to a source or modification to which paragraphs (j), (l), (n) and (p) of this section apply, such information shall include:

(i) A description of the nature, location, design capacity, and typical operating schedule of the source or modification, including specifications and drawings showing its design and plant layout;

(ii) A detailed schedule for construction of the source or modification;

(iii) A detailed description as to what system of continuous emission reduction is planned for the source or modification, emission estimates, and any other information necessary to determine that best available control technology would be applied.

(2) Upon request of the Administrator, the owner or operator shall also provide information on:

(i) The air quality impact of the source or modification, including meteorological and topographical data necessary to estimate such impact; and

(ii) The air quality impacts, and the nature and extent of any or all general commercial, residential, industrial, and other growth which has occurred since August 7, 1977, in the area the source or modification would affect.

(o) *Additional impact analyses.* (1) The owner or operator shall provide an analysis of the impairment to visibility, soils and vegetation that would occur as a result of the source or modification and general commercial, residential, industrial and other growth associated with the source or modification. The owner or operator need not provide an analysis of the impact on vegetation having no significant commercial or recreational value.

(2) The owner or operator shall provide an analysis of the air quality impact projected for the area as a result of general commercial, residential, industrial and other growth associated with the source or modification.

(3) *Visibility monitoring.* The Administrator may require monitoring of visibility in any Federal class I area near the proposed new stationary source for major modification for such purposes

and by such means as the Administrator deems necessary and appropriate.

(p) *Sources impacting Federal Class I areas—additional requirements*—(1) *Notice to Federal land managers*. The Administrator shall provide written notice of any permit application for a proposed major stationary source or major modification, the emissions from which may affect a Class I area, to the Federal land manager and the Federal official charged with direct responsibility for management of any lands within any such area. Such notification shall include a copy of all information relevant to the permit application and shall be given within 30 days of receipt and at least 60 days prior to any public hearing on the application for a permit to construct. Such notification shall include an analysis of the proposed source's anticipated impacts on visibility in the Federal Class I area. The Administrator shall also provide the Federal land manager and such Federal officials with a copy of the preliminary determination required under paragraph (q) of this section, and shall make available to them any materials used in making that determination, promptly after the Administrator makes such determination. Finally, the Administrator shall also notify all affected Federal land managers within 30 days of receipt of any advance notification of any such permit application.

(2) *Federal Land Manager*. The Federal Land Manager and the Federal official charged with direct responsibility for management of such lands have an affirmative responsibility to protect the air quality related values (including visibility) of such lands and to consider, in consultation with the Administrator, whether a proposed source or modification will have an adverse impact on such values.

(3) *Visibility analysis*. The Administrator shall consider any analysis performed by the Federal land manager, provided within 30 days of the notification required by paragraph (p)(1) of this section, that shows that a proposed new major stationary source or major modification may have an adverse impact on visibility in any Federal Class I area. Where the Administrator finds that such an analysis does not demonstrate to the satisfaction of the Administrator that an adverse impact on visibility will result in the Federal Class I area, the Administrator must, in the notice of public hearing on the permit application, either explain his decision or give notice as to where the explanation can be obtained.

(4) *Denial—impact on air quality related values*. The Federal Land Manager of any such lands may demonstrate to the Administrator that the emissions from a proposed source or modification would have an adverse impact on the air quality-related values (including visibility) of those lands, notwithstanding that the change in air quality resulting from emissions from such source or modification would not cause or contribute to concentrations which would exceed the maximum allowable increases for a Class I area. If the Administrator concurs with such demonstration, then he shall not issue the permit.

(5) *Class I variances*. The owner or operator of a proposed source or modification may demonstrate to the Federal Land Manager that the emissions from such source or modification would have no adverse impact on the air quality related values of any such lands (including visibility), notwithstanding that the change in air quality resulting from emissions from such source or modification would cause or contribute to concentrations which would exceed the maximum allowable increases for a Class I area. If the Federal land manager concurs with such demonstration and he so certifies, the State may authorize the Administrator: *Provided*, That the applicable requirements of this section are otherwise met, to issue the permit with such emission limitations as may be necessary to assure that emissions of sulfur dioxide, $PM_{2.5}$, PM_{10}, and nitrogen oxides would not exceed the following maximum allowable increases over minor source baseline concentration for such pollutants:

Pollutant	Maximum allowable increase (micrograms per cubic meter)
$PM_{2.5}$:	
Annual arithmetic mean	4
24-hr maximum	9

Pollutant	Maximum allowable increase (micrograms per cubic meter)
PM_{10}:	
Annual arithmetic mean	17
24-hr maximum	30
Sulfur dioxide:	
Annual arithmetic mean	20
24-hr maximum	91
3-hr maximum	325
Nitrogen dioxide:	
Annual arithmetic mean	25

(6) *Sulfur dioxide variance by Governor with Federal Land Manager's concurrence.* The owner or operator of a proposed source or modification which cannot be approved under paragraph (q)(4) of this section may demonstrate to the Governor that the source cannot be constructed by reason of any maximum allowable increase for sulfur dioxide for a period of twenty-four hours or less applicable to any Class I area and, in the case of Federal mandatory Class I areas, that a variance under this clause would not adversely affect the air quality related values of the area (including visibility). The Governor, after consideration of the Federal Land Manager's recommendation (if any) and subject to his concurrence, may, after notice and public hearing, grant a variance from such maximum allowable increase. If such variance is granted, the Administrator shall issue a permit to such source or modification pursuant to the requirements of paragraph (q)(7) of this section: *Provided,* That the applicable requirements of this section are otherwise met.

(7) *Variance by the Governor with the President's concurrence.* In any case where the Governor recommends a variance in which the Federal Land Manager does not concur, the recommendations of the Governor and the Federal Land Manager shall be transmitted to the President. The President may approve the Governor's recommendation if he finds that the variance is in the national interest. If the variance is approved, the Administrator shall issue a permit pursuant to the requirements of paragraph (q)(7) of this section: *Provided,* That the applicable requirements of this section are otherwise met.

(8) *Emission limitations for Presidential or gubernatorial variance.* In the case of a permit issued pursuant to paragraph (q) (5) or (6) of this section the source or modification shall comply with such emission limitations as may be necessary to assure that emissions of sulfur dioxide from the source or modification would not (during any day on which the otherwise applicable maximum allowable increases are exceeded) cause or contribute to concentrations which would exceed the following maximum allowable increases over the baseline concentration and to assure that such emissions would not cause or contribute to concentrations which exceed the otherwise applicable maximum allowable increases for periods of exposure of 24 hours or less for more than 18 days, not necessarily consecutive, during any annual period:

MAXIMUM ALLOWABLE INCREASE

[Micrograms per cubic meter]

Period of exposure	Terrain areas	
	Low	High
24-hr maximum	36	62
3-hr maximum	130	221

(q) *Public participation.* The administrator shall follow the applicable procedures of 40 CFR part 124 in processing applications under this section.

(r) *Source obligation.* (1) Any owner or operator who constructs or operates a source or modification not in accordance with the application submitted pursuant to this section or with the terms of any approval to construct, or any owner or operator of a source or modification subject to this section who commences construction after the effective date of these regulations without applying for and receiving approval hereunder, shall be subject to appropriate enforcement action.

(2) Approval to construct shall become invalid if construction is not commenced within 18 months after receipt of such approval, if construction is discontinued for a period of 18 months or more, or if construction is not completed within a reasonable time. The Administrator may extend the 18-month period upon a satisfactory showing that an extension is justified. This provision does not apply to the time period between construction

of the approved phases of a phased construction project; each phase must commence construction within 18 months of the projected and approved commencement date.

(3) Approval to construct shall not relieve any owner or operator of the responsibility to comply fully with applicable provisions of the State implementation plan and any other requirements under local, State, or Federal law.

(4) At such time that a particular source or modification becomes a major stationary source or major modification solely by virtue of a relaxation in any enforceable limitation which was established after August 7, 1980, on the capacity of the source or modification otherwise to emit a pollutant, such as a restriction on hours of operation, then the requirements or paragraphs (j) through (s) of this section shall apply to the source or modification as though construction had not yet commenced on the source or modification.

(5) [Reserved]

(6) Except as otherwise provided in paragraph (r)(6)(vi)(*b*) of this section, the provisions of this paragraph (r)(6) apply with respect to any regulated NSR pollutant emitted from projects at existing emissions units at a major stationary source (other than projects at a source with a PAL) in circumstances where there is a reasonable possibility, within the meaning of paragraph (r)(6)(vi) of this section, that a project that is not a part of a major modification may result in a significant emissions increase of such pollutant, and the owner or operator elects to use the method specified in paragraphs (b)(41)(ii)(*a*) through (*c*) of this section for calculating projected actual emissions.

(i) Before beginning actual construction of the project, the owner or operator shall document and maintain a record of the following information:

(*a*) A description of the project;

(*b*) Identification of the emissions unit(s) whose emissions of a regulated NSR pollutant could be affected by the project; and

(*c*) A description of the applicability test used to determine that the project is not a major modification for any regulated NSR pollutant, including the baseline actual emissions, the projected actual emissions, the amount of emissions excluded under paragraph (b)(41)(ii)(*c*) of this section and an explanation for why such amount was excluded, and any netting calculations, if applicable.

(ii) If the emissions unit is an existing electric utility steam generating unit, before beginning actual construction, the owner or operator shall provide a copy of the information set out in paragraph (r)(6)(i) of this section to the Administrator. Nothing in this paragraph (r)(6)(ii) shall be construed to require the owner or operator of such a unit to obtain any determination from the Administrator before beginning actual construction.

(iii) The owner or operator shall monitor the emissions of any regulated NSR pollutant that could increase as a result of the project and that is emitted by any emissions unit identified in paragraph (r)(6)(i)(*b*) of this section; and calculate and maintain a record of the annual emissions, in tons per year on a calendar year basis, for a period of 5 years following resumption of regular operations after the change, or for a period of 10 years following resumption of regular operations after the change if the project increases the design capacity or potential to emit that regulated NSR pollutant at such emissions unit.

(iv) If the unit is an existing electric utility steam generating unit, the owner or operator shall submit a report to the Administrator within 60 days after the end of each year during which records must be generated under paragraph (r)(6)(iii) of this section setting out the unit's annual emissions during the calendar year that preceded submission of the report.

(v) If the unit is an existing unit other than an electric utility steam generating unit, the owner or operator shall submit a report to the Administrator if the annual emissions, in tons per year, from the project identified in paragraph (r)(6)(i) of this section, exceed the baseline actual emissions (as documented and maintained pursuant to paragraph (r)(6)(i)(*c*) of this section), by a significant amount (as defined in paragraph (b)(23) of this section) for

that regulated NSR pollutant, and if such emissions differ from the preconstruction projection as documented and maintained pursuant to paragraph (r)(6)(i)(*c*) of this section. Such report shall be submitted to the Administrator within 60 days after the end of such year. The report shall contain the following:

(*a*) The name, address and telephone number of the major stationary source;

(*b*) The annual emissions as calculated pursuant to paragraph (r)(6)(iii) of this section; and

(*c*) Any other information that the owner or operator wishes to include in the report (e.g., an explanation as to why the emissions differ from the preconstruction projection).

(vi) A ''reasonable possibility'' under paragraph (r)(6) of this section occurs when the owner or operator calculates the project to result in either:

(*a*) A projected actual emissions increase of at least 50 percent of the amount that is a ''significant emissions increase,'' as defined under paragraph (b)(40) of this section (without reference to the amount that is a significant net emissions increase), for the regulated NSR pollutant; or

(*b*) A projected actual emissions increase that, added to the amount of emissions excluded under paragraph (b)(41)(ii)(*c*) of this section, sums to at least 50 percent of the amount that is a ''significant emissions increase,'' as defined under paragraph (b)(40) of this section (without reference to the amount that is a significant net emissions increase), for the regulated NSR pollutant. For a project for which a reasonable possibility occurs only within the meaning of paragraph (r)(6)(vi)(*b*) of this section, and not also within the meaning of paragraph (r)(6)(vi)(*a*) of this section, then provisions (r)(6)(ii) through (v) do not apply to the project.

(7) The owner or operator of the source shall make the information required to be documented and maintained pursuant to paragraph (r)(6) of this section available for review upon a request for inspection by the Administrator or the general public pursuant to the requirements contained in § 70.4(b)(3)(viii) of this chapter.

(s) *Environmental impact statements.* Whenever any proposed source or modification is subject to action by a Federal Agency which might necessitate preparation of an environmental impact statement pursuant to the National Environmental Policy Act (42 U.S.C. 4321), review by the Administrator conducted pursuant to this section shall be coordinated with the broad environmental reviews under that Act and under section 309 of the Clean Air Act to the maximum extent feasible and reasonable.

(t) *Disputed permits or redesignations.* If any State affected by the redesignation of an area by an Indian Governing Body, or any Indian Governing Body of a tribe affected by the redesignation of an area by a State, disagrees with such redesignation, or if a permit is proposed to be issued for any major stationary source or major modification proposed for construction in any State which the Governor of an affected State or Indian Governing Body of an affected tribe determines will cause or contribute to a cumulative change in air quality in excess of that allowed in this part within the affected State or Indian Reservation, the Governor or Indian Governing Body may request the Administrator to enter into negotiations with the parties involved to resolve such dispute. If requested by any State or Indian Governing Body involved, the Administrator shall make a recommendation to resolve the dispute and protect the air quality related values of the lands involved. If the parties involved do not reach agreement, the Administrator shall resolve the dispute and his determination, or the results of agreements reached through other means, shall become part of the applicable State implementation plan and shall be enforceable as part of such plan. In resolving such disputes relating to area redesignation, the Administrator shall consider the extent to which the lands involved are of sufficient size to allow effective air quality management or have air quality related values of such an area.

(u) *Delegation of authority.* (1) The Administrator shall have the authority to delegate his responsibility for conducting source review pursuant to this

section, in accordance with paragraph (u)(2) of this section.

(2) Where the Administrator delegates the responsibility for conducting source review under this section to any agency other than a Regional Office of the Environmental Protection Agency, the following provisions shall apply:

(i) Where the delegate agency is not an air pollution control agency, it shall consult with the appropriate state, tribe, and local air pollution control agency prior to making any determination under this section. Similarly, where the delegate agency does not have continuing responsibility for managing land use, it shall consult with the appropriate state, tribe, and local agency primarily responsible for managing land use prior to making any determination under this section.

(ii) The delegate agency shall send a copy of any public comment notice required under paragraph (r) of this section to the Administrator through the appropriate Regional Office.

(3) In the case of a source or modification which proposes to construct in a class III area, emissions from which would cause or contribute to air quality exceeding the maximum allowable increase applicable if the area were designated a class II area, and where no standard under section 111 of the act has been promulgated for such source category, the Administrator must approve the determination of best available control technology as set forth in the permit.

(v) *Innovative control technology*. (1) An owner or operator of a proposed major stationary source or major modification may request the Administrator in writing no later than the close of the comment period under 40 CFR 124.10 to approve a system of innovative control technology.

(2) The Administrator shall, with the consent of the governor(s) of the affected state(s), determine that the source or modification may employ a system of innovative control technology, if:

(i) The proposed control system would not cause or contribute to an unreasonable risk to public health, welfare, or safety in its operation or function;

(ii) The owner or operator agrees to achieve a level of continuous emissions reduction equivalent to that which would have been required under paragraph (j)(2) of this section, by a date specified by the Administrator. Such date shall not be later than 4 years from the time of startup or 7 years from permit issuance;

(iii) The source or modification would meet the requirements of paragraphs (j) and (k) of this section, based on the emissions rate that the stationary source employing the system of innovative control technology would be required to meet on the date specified by the Administrator;

(iv) The source or modification would not before the date specified by the Administrator:

(*a*) Cause or contribute to a violation of an applicable national ambient air quality standard; or

(*b*) Impact any area where an applicable increment is known to be violated; and

(v) All other applicable requirements including those for public participation have been met.

(vi) The provisions of paragraph (p) of this section (relating to Class I areas) have been satisfied with respect to all periods during the life of the source or modification.

(3) The Administrator shall withdraw any approval to employ a system of innovative control technology made under this section, if:

(i) The proposed system fails by the specified date to achieve the required continuous emissions reduction rate; or

(ii) The proposed system fails before the specified date so as to contribute to an unreasonable risk to public health, welfare, or safety; or

(iii) The Administrator decides at any time that the proposed system is unlikely to achieve the required level of control or to protect the public health, welfare, or safety.

(4) If a source or modification fails to meet the required level of continuous emission reduction within the specified time period or the approval is withdrawn in accordance with paragraph (v)(3) of this section, the Administrator may allow the source or modification up to an additional 3 years to meet the

requirement for the application of best available control technology through use of a demonstrated system of control.

(w) *Permit rescission*. (1) Any permit issued under this section or a prior version of this section shall remain in effect, unless and until it expires under paragraph (r) of this section or is rescinded under this paragraph (w).

(2) An owner or operator of a stationary source or modification who holds a permit issued under this section for the construction of a new source or modification that meets the requirement in paragraph (w)(3) of this section may request that the Administrator rescind the permit or a particular portion of the permit.

(3) The Administrator may grant an application for rescission if the application shows that this section would not apply to the source or modification.

(4) If the Administrator rescinds a permit under this paragraph, the Administrator shall post a notice of the rescission determination on a public Web site identified by the Administrator within 60 days of the rescission.

(x)–(z) [Reserved]

(aa) *Actuals PALs*. The provisions in paragraphs (aa)(1) through (15) of this section govern actuals PALs.

(1) *Applicability*. (i) The Administrator may approve the use of an actuals PAL, including for GHGs on either a mass basis or a CO_2e basis, for any existing major stationary source or any existing GHG-only source if the PAL meets the requirements in paragraphs (aa)(1) through (15) of this section. The term ''PAL'' shall mean ''actuals PAL'' throughout paragraph (aa) of this section.

(ii) Any physical change in or change in the method of operation of a major stationary source or a GHG-only source that maintains its total sourcewide emissions below the PAL level, meets the requirements in paragraphs (aa)(1) through (15) of this section, and complies with the PAL permit:

(*a*) Is not a major modification for the PAL pollutant;

(*b*) Does not have to be approved through the PSD program;

(*c*) Is not subject to the provisions in paragraph (r)(4) of this section (restrictions on relaxing enforceable emission limitations that the major stationary source used to avoid applicability of the major NSR program); and

(*d*) Does not make GHGs subject to regulation as defined by paragraph (b)(49) of this section.

(iii) Except as provided under paragraph (aa)(1)(ii)(*c*) of this section, a major stationary source or a GHG-only source shall continue to comply with all applicable Federal or State requirements, emission limitations, and work practice requirements that were established prior to the effective date of the PAL.

(2) *Definitions*. For the purposes of this section, the definitions in paragraphs (aa)(2)(i) through (xi) of this section apply. When a term is not defined in these paragraphs, it shall have the meaning given in paragraph (b) of this section or in the Act.

(i) *Actuals PAL* for a major stationary source means a PAL based on the baseline actual emissions (as defined in paragraph (b)(48) of this section) of all emissions units (as defined in paragraph (b)(7) of this section) at the source, that emit or have the potential to emit the PAL pollutant. For a GHG-only source, *actuals PAL* means a PAL based on the baseline actual emissions (as defined in paragraph (aa)(2)(xiii) of this section) of all emissions units (as defined in paragraph (aa)(2)(xiv) of this section) at the source, that emit or have the potential to emit GHGs.

(ii) *Allowable emissions* means ''allowable emissions'' as defined in paragraph (b)(16) of this section, except as this definition is modified according to paragraphs (aa)(2)(ii)(*a*) and (*b*) of this section.

(*a*) The allowable emissions for any emissions unit shall be calculated considering any emission limitations that are enforceable as a practical matter on the emissions unit's potential to emit.

(*b*) An emissions unit's potential to emit shall be determined using the definition in paragraph (b)(4) of this section, except that the words ''or enforceable as a practical matter'' should be added after ''federally enforceable.''

(iii) *Small emissions unit* means an emissions unit that emits or has the potential to emit the PAL pollutant in

an amount less than the significant level for that PAL pollutant, as defined in paragraph (b)(23) of this section or in the Act, whichever is lower. For a GHG PAL issued on a CO_2e basis, *small emissions unit* means an emissions unit that emits or has the potential to emit less than the amount of GHGs on a CO_2e basis defined as ''significant'' for the purposes of paragraph (b)(49)(iii) of this section at the time the PAL permit is being issued.

(iv) *Major emissions unit* means:

(*a*) Any emissions unit that emits or has the potential to emit 100 tons per year or more of the PAL pollutant in an attainment area; or

(*b*) Any emissions unit that emits or has the potential to emit the PAL pollutant in an amount that is equal to or greater than the major source threshold for the PAL pollutant as defined by the Act for nonattainment areas. For example, in accordance with the definition of major stationary source in section 182(c) of the Act, an emissions unit would be a major emissions unit for VOC if the emissions unit is located in a serious ozone nonattainment area and it emits or has the potential to emit 50 or more tons of VOC per year.

(*c*) For a GHG PAL issued on a CO_2e basis, any emissions unit that emits or has the potential to emit equal to or greater than the amount of GHGs on a CO_2e basis that would be sufficient for a new source to trigger permitting requirements under paragraph (b)(49) of this section at the time the PAL permit is being issued.

(v) *Plantwide applicability limitation (PAL)* means an emission limitation expressed on a mass basis in tons per year, or expressed in tons per year CO_2e for a CO_2e-based GHG emission limitation, for a pollutant at a major stationary source or GHG-only source, that is enforceable as a practical matter and established source-wide in accordance with paragraphs (aa)(1) through (15) of this section.

(vi) *PAL effective date* generally means the date of issuance of the PAL permit. However, the PAL effective date for an increased PAL is the date any emissions unit that is part of the PAL major modification becomes operational and begins to emit the PAL pollutant.

(vii) *PAL effective period* means the period beginning with the PAL effective date and ending 10 years later.

(viii) *PAL major modification* means, notwithstanding paragraphs (b)(2), (b)(3), and (b)(49) of this section (the definitions for major modification, net emissions increase, and subject to regulation), any physical change in or change in the method of operation of the PAL source that causes it to emit the PAL pollutant at a level equal to or greater than the PAL.

(ix) *PAL permit* means the major NSR permit, the minor NSR permit, or the State operating permit under a program that is approved into the State Implementation Plan, or the title V permit issued by the Administrator that establishes a PAL for a major stationary source or a GHG-only source.

(x) *PAL pollutant* means the pollutant for which a PAL is established at a major stationary source or a GHG-only source. For a GHG-only source, the only available PAL pollutant is greenhouse gases.

(xi) *Significant emissions unit* means an emissions unit that emits or has the potential to emit a PAL pollutant in an amount that is equal to or greater than the significant level (as defined in paragraph (b)(23) of this section or in the Act, whichever is lower) for that PAL pollutant, but less than the amount that would qualify the unit as a major emissions unit as defined in paragraph (aa)(2)(iv) of this section. For a GHG PAL issued on a CO_2e basis, *significant emissions unit* means any emissions unit that emits or has the potential to emit GHGs on a CO_2e basis in amounts equal to or greater than the amount that would qualify the unit as small emissions unit as defined in paragraph (aa)(2)(iii) of this section, but less than the amount that would qualify the unit as a major emissions unit as defined in paragraph (aa)(2)(iv)(*c*) of this section.

(xii) *GHG-only source* means any existing stationary source that emits or has the potential to emit GHGs in the amount equal to or greater than the amount of GHGs on a mass basis that would be sufficient for a new source to trigger permitting requirements for GHGs under paragraph (b)(1) of this section and the amount of GHGs on a

CO_2e basis that would be sufficient for a new source to trigger permitting requirements for GHGs under paragraph (b)(49) of this section at the time the PAL permit is being issued, but does not emit or have the potential to emit any other non-GHG regulated NSR pollutant at or above the applicable major source threshold. A GHG-only source may only obtain a PAL for GHG emissions under paragraph (aa) of this section.

(xiii) *Baseline actual emissions* for a GHG PAL means the average rate, in tons per year CO_2e or tons per year GHG, as applicable, at which the emissions unit actually emitted GHGs during any consecutive 24-month period selected by the owner or operator within the 10-year period immediately preceding either the date the owner or operator begins actual construction of the project, or the date a complete permit application is received by the Administrator for a permit required under this section or by the permitting authority for a permit required by a plan, whichever is earlier. For any existing electric utility steam generating unit, *baseline actual emissions* for a GHG PAL means the average rate, in tons per year CO_2e or tons per year GHG, as applicable, at which the emissions unit actually emitted the GHGs during any consecutive 24-month period selected by the owner or operator within the 5-year period immediately preceding either the date the owner or operator begins actual construction of the project, except that the Administrator shall allow the use of a different time period upon a determination that it is more representative of normal source operation.

(*a*) The average rate shall include fugitive emissions to the extent quantifiable, and emissions associated with startups, shutdowns, and malfunctions.

(*b*) The average rate shall be adjusted downward to exclude any non-compliant emissions that occurred while the source was operating above an emission limitation that was legally enforceable during the consecutive 24-month period.

(*c*) The average rate shall be adjusted downward to exclude any emissions that would have exceeded an emission limitation with which the stationary source must currently comply, had such stationary source been required to comply with such limitations during the consecutive 24-month period.

(*d*) The average rate shall not be based on any consecutive 24-month period for which there is inadequate information for determining annual GHG emissions and for adjusting this amount if required by paragraphs (aa)(2)(xiii)(*b*) and (*c*) of this section.

(xiv) *Emissions unit* with respect to GHGs means any part of a stationary source that emits or has the potential to emit GHGs. For purposes of this section, there are two types of emissions units as described in the following:

(*a*) A new emissions unit is any emissions unit that is (or will be) newly constructed and that has existed for less than 2 years from the date such emissions unit first operated.

(*b*) An existing emissions unit is any emissions unit that does not meet the requirements in paragraph (aa)(2)(xiv)(*a*) of this section.

(xv) *Minor source* means any stationary source that does not meet the definition of major stationary source in paragraph (b)(1) of this section for any pollutant at the time the PAL is issued.

(3) *Permit application requirements.* As part of a permit application requesting a PAL, the owner or operator of a major stationary source or a GHG-only source shall submit the following information to the Administrator for approval:

(i) A list of all emissions units at the source designated as small, significant or major based on their potential to emit. In addition, the owner or operator of the source shall indicate which, if any, Federal or State applicable requirements, emission limitations, or work practices apply to each unit.

(ii) Calculations of the baseline actual emissions (with supporting documentation). Baseline actual emissions are to include emissions associated not only with operation of the unit, but also emissions associated with startup, shutdown, and malfunction.

(iii) The calculation procedures that the major stationary source owner or operator proposes to use to convert the monitoring system data to monthly emissions and annual emissions based

on a 12-month rolling total for each month as required by paragraph (aa)(13)(i) of this section.

(iv) As part of a permit application requesting a GHG PAL, the owner or operator of a major stationary source or a GHG-only source shall submit a statement by the source owner or operator that clarifies whether the source is an existing major source as defined in paragraph (b)(1)(i)(*a*) and (*b*) of this section or a GHG-only source as defined in paragraph (aa)(2)(xii) of this section.

(4) *General requirements for establishing PALs.* (i) The Administrator is allowed to establish a PAL at a major stationary source or a GHG-only source, provided that at a minimum, the requirements in paragraphs (aa)(4)(i)(*a*) through (*g*) of this section are met.

(*a*) The PAL shall impose an annual emission limitation expressed on a mass basis in tons per year, or expressed in tons per year CO_2e, that is enforceable as a practical matter, for the entire major stationary source or GHG-only source. For each month during the PAL effective period after the first 12 months of establishing a PAL, the major stationary source or GHG-only source owner or operator shall show that the sum of the monthly emissions from each emissions unit under the PAL for the previous 12 consecutive months is less than the PAL (a 12-month average, rolled monthly). For each month during the first 11 months from the PAL effective date, the major stationary source or GHG-only source owner or operator shall show that the sum of the preceding monthly emissions from the PAL effective date for each emissions unit under the PAL is less than the PAL.

(*b*) The PAL shall be established in a PAL permit that meets the public participation requirements in paragraph (aa)(5) of this section.

(*c*) The PAL permit shall contain all the requirements of paragraph (aa)(7) of this section.

(*d*) The PAL shall include fugitive emissions, to the extent quantifiable, from all emissions units that emit or have the potential to emit the PAL pollutant at the major stationary source or GHG-only source.

(*e*) Each PAL shall regulate emissions of only one pollutant.

(*f*) Each PAL shall have a PAL effective period of 10 years.

(*g*) The owner or operator of the major stationary source or GHG-only source with a PAL shall comply with the monitoring, recordkeeping, and reporting requirements provided in paragraphs (aa)(12) through (14) of this section for each emissions unit under the PAL through the PAL effective period.

(ii) At no time (during or after the PAL effective period) are emissions reductions of a PAL pollutant that occur during the PAL effective period creditable as decreases for purposes of offsets under § 51.165(a)(3)(ii) of this chapter unless the level of the PAL is reduced by the amount of such emissions reductions and such reductions would be creditable in the absence of the PAL.

(5) *Public participation requirements for PALs.* PALs for existing major stationary sources or GHG-only sources shall be established, renewed, or increased through a procedure that is consistent with §§ 51.160 and 51.161 of this chapter. This includes the requirement that the Administrator provide the public with notice of the proposed approval of a PAL permit and at least a 30-day period for submittal of public comment. The Administrator must address all material comments before taking final action on the permit.

(6) *Setting the 10-year actuals PAL level.* (i) Except as provided in paragraph (aa)(6)(ii) and (iii) of this section, the plan shall provide that the actuals PAL level for a major stationary source or a GHG-only source shall be established as the sum of the baseline actual emissions (as defined in paragraph (b)(48) of this section or, for GHGs, paragraph (aa)(2)(xiii) of this section) of the PAL pollutant for each emissions unit at the source; plus an amount equal to the applicable significant level for the PAL pollutant under paragraph (b)(23) of this section or under the Act, whichever is lower. When establishing the actuals PAL level, for a PAL pollutant, only one consecutive 24-month period must be used to determine the baseline actual emissions for all existing emissions units. However, a different consecutive

24-month period may be used for each different PAL pollutant. Emissions associated with units that were permanently shut down after this 24-month period must be subtracted from the PAL level. The reviewing authority shall specify a reduced PAL level(s) (in tons/yr) in the PAL permit to become effective on the future compliance date(s) of any applicable Federal or State regulatory requirement(s) that the reviewing authority is aware of prior to issuance of the PAL permit. For instance, if the source owner or operator will be required to reduce emissions from industrial boilers in half from baseline emissions of 60 ppm NO_X to a new rule limit of 30 ppm, then the permit shall contain a future effective PAL level that is equal to the current PAL level reduced by half of the original baseline emissions of such unit(s).

(ii) For newly constructed units (which do not include modifications to existing units) on which actual construction began after the 24-month period, in lieu of adding the baseline actual emissions as specified in paragraph (aa)(6)(i) of this section, the emissions must be added to the PAL level in an amount equal to the potential to emit of the units.

(iii) For CO_2e based GHG PAL, the actuals PAL level shall be established as the sum of the GHGs baseline actual emissions (as defined in paragraph (aa)(2)(xiii) of this section) of GHGs for each emissions unit at the source, plus an amount equal to the amount defined as ''significant'' on a CO_2e basis for the purposes of paragraph (b)(49)(iii) at the time the PAL permit is being issued. When establishing the actuals PAL level for a CO_2e-based PAL, only one consecutive 24-month period must be used to determine the baseline actual emissions for all existing emissions units. Emissions associated with units that were permanently shut down after this 24-month period must be subtracted from the PAL level. The reviewing authority shall specify a reduced PAL level (in tons per year CO_2e) in the PAL permit to become effective on the future compliance date(s) of any applicable Federal or state regulatory requirement(s) that the reviewing authority is aware of prior to issuance of the PAL permit.

(7) *Contents of the PAL permit.* The PAL permit must contain, at a minimum, the information in paragraphs (aa)(7)(i) through (xi) of this section.

(i) The PAL pollutant and the applicable source-wide emission limitation in tons per year or tons per year CO_2e.

(ii) The PAL permit effective date and the expiration date of the PAL (PAL effective period).

(iii) Specification in the PAL permit that if a major stationary source or a GHG-only source owner or operator applies to renew a PAL in accordance with paragraph (aa)(10) of this section before the end of the PAL effective period, then the PAL shall not expire at the end of the PAL effective period. It shall remain in effect until a revised PAL permit is issued by a reviewing authority.

(iv) A requirement that emission calculations for compliance purposes must include emissions from startups, shutdowns, and malfunctions.

(v) A requirement that, once the PAL expires, the major stationary source or GHG-only source is subject to the requirements of paragraph (aa)(9) of this section.

(vi) The calculation procedures that the major stationary source or GHG-only source owner or operator shall use to convert the monitoring system data to monthly emissions and annual emissions based on a 12-month rolling total as required by paragraph (aa)(13)(i) of this section.

(vii) A requirement that the major stationary source or GHG-only source owner or operator monitor all emissions units in accordance with the provisions under paragraph (aa)(12) of this section.

(viii) A requirement to retain the records required under paragraph (aa)(13) of this section on site. Such records may be retained in an electronic format.

(ix) A requirement to submit the reports required under paragraph (aa)(14) of this section by the required deadlines.

(x) Any other requirements that the Administrator deems necessary to implement and enforce the PAL.

(xi) A permit for a GHG PAL issued to a GHG-only source shall also include

a statement denoting that GHG emissions at the source will not be subject to regulation under paragraph (b)(49) of this section as long as the source complies with the PAL.

(8) *PAL effective period and reopening of the PAL permit.* The requirements in paragraphs (aa)(8)(i) and (ii) of this section apply to actuals PALs.

(i) *PAL effective period.* The Administrator shall specify a PAL effective period of 10 years.

(ii) *Reopening of the PAL permit.* (*a*) During the PAL effective period, the Administrator must reopen the PAL permit to:

(*1*) Correct typographical/calculation errors made in setting the PAL or reflect a more accurate determination of emissions used to establish the PAL;

(*2*) Reduce the PAL if the owner or operator of the major stationary source creates creditable emissions reductions for use as offsets under § 51.165(a)(3)(ii) of this chapter; and

(*3*) Revise the PAL to reflect an increase in the PAL as provided under paragraph (aa)(11) of this section.

(*b*) The Administrator shall have discretion to reopen the PAL permit for the following:

(*1*) Reduce the PAL to reflect newly applicable Federal requirements (for example, NSPS) with compliance dates after the PAL effective date;

(*2*) Reduce the PAL consistent with any other requirement, that is enforceable as a practical matter, and that the State may impose on the major stationary source or GHG-only source under the State Implementation Plan; and

(*3*) Reduce the PAL if the reviewing authority determines that a reduction is necessary to avoid causing or contributing to a NAAQS or PSD increment violation, or to an adverse impact on an air quality related value that has been identified for a Federal Class I area by a Federal Land Manager and for which information is available to the general public.

(*c*) Except for the permit reopening in paragraph (aa)(8)(ii)(*a*)(*1*) of this section for the correction of typographical/calculation errors that do not increase the PAL level, all other reopenings shall be carried out in accordance with the public participation requirements of paragraph (aa)(5) of this section.

(9) *Expiration of a PAL.* Any PAL that is not renewed in accordance with the procedures in paragraph (aa)(10) of this section shall expire at the end of the PAL effective period, and the requirements in paragraphs (aa)(9)(i) through (v) of this section shall apply.

(i) Each emissions unit (or each group of emissions units) that existed under the PAL shall comply with an allowable emission limitation under a revised permit established according to the procedures in paragraphs (aa)(9)(i)(*a*) and (*b*) of this section.

(*a*) Within the time frame specified for PAL renewals in paragraph (aa)(10)(ii) of this section, the major stationary source or GHG-only source shall submit a proposed allowable emission limitation for each emissions unit (or each group of emissions units, if such a distribution is more appropriate as decided by the Administrator) by distributing the PAL allowable emissions for the major stationary source or GHG-only source among each of the emissions units that existed under the PAL. If the PAL had not yet been adjusted for an applicable requirement that became effective during the PAL effective period, as required under paragraph (aa)(10)(v) of this section, such distribution shall be made as if the PAL had been adjusted.

(*b*) The Administrator shall decide whether and how the PAL allowable emissions will be distributed and issue a revised permit incorporating allowable limits for each emissions unit, or each group of emissions units, as the Administrator determines is appropriate.

(ii) Each emissions unit(s) shall comply with the allowable emission limitation on a 12-month rolling basis. The Administrator may approve the use of monitoring systems (source testing, emission factors, etc.) other than CEMS, CERMS, PEMS, or CPMS to demonstrate compliance with the allowable emission limitation.

(iii) Until the Administrator issues the revised permit incorporating allowable limits for each emissions unit, or each group of emissions units, as required under paragraph (aa)(9)(i)(*b*) of this section, the source shall continue

to comply with a source-wide, multi-unit emissions cap equivalent to the level of the PAL emission limitation.

(iv) Any physical change or change in the method of operation at the major stationary source or GHG-only source will be subject to major NSR requirements if such change meets the definition of major modification in paragraph (b)(2) of this section.

(v) The major stationary source or GHG-only source owner or operator shall continue to comply with any State or Federal applicable requirements (BACT, RACT, NSPS, etc.) that may have applied either during the PAL effective period or prior to the PAL effective period except for those emission limitations that had been established pursuant to paragraph (r)(4) of this section, but were eliminated by the PAL in accordance with the provisions in paragraph (aa)(1)(ii)(*c*) of this section.

(10) *Renewal of a PAL.* (i) The Administrator shall follow the procedures specified in paragraph (aa)(5) of this section in approving any request to renew a PAL for a major stationary source or a GHG-only source, and shall provide both the proposed PAL level and a written rationale for the proposed PAL level to the public for review and comment. During such public review, any person may propose a PAL level for the source for consideration by the Administrator.

(ii) *Application deadline.* A major stationary source or GHG-only source owner or operator shall submit a timely application to the Administrator to request renewal of a PAL. A timely application is one that is submitted at least 6 months prior to, but not earlier than 18 months from, the date of permit expiration. This deadline for application submittal is to ensure that the permit will not expire before the permit is renewed. If the owner or operator of a major stationary source or GHG-only source submits a complete application to renew the PAL within this time period, then the PAL shall continue to be effective until the revised permit with the renewed PAL is issued.

(iii) *Application requirements.* The application to renew a PAL permit shall contain the information required in paragraphs (aa)(10)(iii)(*a*) through (*d*) of this section.

(*a*) The information required in paragraphs (aa)(3)(i) through (iii) of this section.

(*b*) A proposed PAL level.

(*c*) The sum of the potential to emit of all emissions units under the PAL (with supporting documentation).

(*d*) Any other information the owner or operator wishes the Administrator to consider in determining the appropriate level for renewing the PAL.

(iv) *PAL adjustment.* In determining whether and how to adjust the PAL, the Administrator shall consider the options outlined in paragraphs (aa)(10)(iv)(*a*) and (*b*) of this section. However, in no case may any such adjustment fail to comply with paragraph (aa)(10)(iv)(*c*) of this section.

(*a*) If the emissions level calculated in accordance with paragraph (aa)(6) of this section is equal to or greater than 80 percent of the PAL level, the Administrator may renew the PAL at the same level without considering the factors set forth in paragraph (aa)(10)(iv)(*b*) of this section; or

(*b*) The Administrator may set the PAL at a level that he or she determines to be more representative of the source's baseline actual emissions, or that he or she determines to be more appropriate considering air quality needs, advances in control technology, anticipated economic growth in the area, desire to reward or encourage the source's voluntary emissions reductions, or other factors as specifically identified by the Administrator in his or her written rationale.

(*c*) Notwithstanding paragraphs (aa)(10)(iv)(a) and (b) of this section:

(*1*) If the potential to emit of the major stationary source or GHG-only source is less than the PAL, the Administrator shall adjust the PAL to a level no greater than the potential to emit of the source; and

(*2*) The Administrator shall not approve a renewed PAL level higher than the current PAL, unless the major stationary source or GHG-only source has complied with the provisions of paragraph (aa)(11) of this section (increasing a PAL).

(v) If the compliance date for a State or Federal requirement that applies to

the PAL source occurs during the PAL effective period, and if the Administrator has not already adjusted for such requirement, the PAL shall be adjusted at the time of PAL permit renewal or title V permit renewal, whichever occurs first.

(11) *Increasing a PAL during the PAL effective period.* (i) The Administrator may increase a PAL emission limitation only if the major stationary source or GHG-only source complies with the provisions in paragraphs (aa)(11)(i)(*a*) through (*d*) of this section.

(*a*) The owner or operator of the major stationary source or GHG-only source shall submit a complete application to request an increase in the PAL limit for a PAL major modification. Such application shall identify the emissions unit(s) contributing to the increase in emissions so as to cause the major stationary or GHG-only source's emissions to equal or exceed its PAL.

(*b*) As part of this application, the major stationary source or GHG-only source owner or operator shall demonstrate that the sum of the baseline actual emissions of the small emissions units, plus the sum of the baseline actual emissions of the significant and major emissions units assuming application of BACT equivalent controls, plus the sum of the allowable emissions of the new or modified emissions unit(s) exceeds the PAL. The level of control that would result from BACT equivalent controls on each significant or major emissions unit shall be determined by conducting a new BACT analysis at the time the application is submitted, unless the emissions unit is currently required to comply with a BACT or LAER requirement that was established within the preceding 10 years. In such a case, the assumed control level for that emissions unit shall be equal to the level of BACT or LAER with which that emissions unit must currently comply.

(*c*) The owner or operator obtains a major NSR permit for all emissions unit(s) identified in paragraph (aa)(11)(i)(*a*) of this section, regardless of the magnitude of the emissions increase resulting from them (that is, no significant levels apply). These emissions unit(s) shall comply with any emissions requirements resulting from the major NSR process (for example, BACT), even though they have also become subject to the PAL or continue to be subject to the PAL.

(*d*) The PAL permit shall require that the increased PAL level shall be effective on the day any emissions unit that is part of the PAL major modification becomes operational and begins to emit the PAL pollutant.

(ii) The Administrator shall calculate the new PAL as the sum of the allowable emissions for each modified or new emissions unit, plus the sum of the baseline actual emissions of the significant and major emissions units (assuming application of BACT equivalent controls as determined in accordance with paragraph (aa)(11)(i)(*b*)), plus the sum of the baseline actual emissions of the small emissions units.

(iii) The PAL permit shall be revised to reflect the increased PAL level pursuant to the public notice requirements of paragraph (aa)(5) of this section.

(12) *Monitoring requirements for PALs.* (i) *General requirements.* (*a*) Each PAL permit must contain enforceable requirements for the monitoring system that accurately determines plantwide emissions of the PAL pollutant in terms of mass per unit of time or CO_2e per unit of time. Any monitoring system authorized for use in the PAL permit must be based on sound science and meet generally acceptable scientific procedures for data quality and manipulation. Additionally, the information generated by such system must meet minimum legal requirements for admissibility in a judicial proceeding to enforce the PAL permit.

(*b*) The PAL monitoring system must employ one or more of the four general monitoring approaches meeting the minimum requirements set forth in paragraphs (aa)(12)(ii)(*a*) through (*d*) of this section and must be approved by the Administrator.

(*c*) Notwithstanding paragraph (aa)(12)(i)(*b*) of this section, you may also employ an alternative monitoring approach that meets paragraph (aa)(12)(i)(*a*) of this section if approved by the Administrator.

(*d*) Failure to use a monitoring system that meets the requirements of this section renders the PAL invalid.

(ii) Minimum performance requirements for approved monitoring approaches. The following are acceptable general monitoring approaches when conducted in accordance with the minimum requirements in paragraphs (aa)(12)(iii) through (ix) of this section:

(*a*) Mass balance calculations for activities using coatings or solvents;

(*b*) CEMS;

(*c*) CPMS or PEMS; and

(*d*) Emission factors.

(iii) *Mass balance calculations.* An owner or operator using mass balance calculations to monitor PAL pollutant emissions from activities using coating or solvents shall meet the following requirements:

(*a*) Provide a demonstrated means of validating the published content of the PAL pollutant that is contained in or created by all materials used in or at the emissions unit;

(*b*) Assume that the emissions unit emits all of the PAL pollutant that is contained in or created by any raw material or fuel used in or at the emissions unit, if it cannot otherwise be accounted for in the process; and

(*c*) Where the vendor of a material or fuel, which is used in or at the emissions unit, publishes a range of pollutant content from such material, the owner or operator must use the highest value of the range to calculate the PAL pollutant emissions unless the Administrator determines there is site-specific data or a site-specific monitoring program to support another content within the range.

(iv) *CEMS.* An owner or operator using CEMS to monitor PAL pollutant emissions shall meet the following requirements:

(*a*) CEMS must comply with applicable Performance Specifications found in 40 CFR part 60, appendix B; and

(*b*) CEMS must sample, analyze and record data at least every 15 minutes while the emissions unit is operating.

(v) *CPMS or PEMS.* An owner or operator using CPMS or PEMS to monitor PAL pollutant emissions shall meet the following requirements:

(*a*) The CPMS or the PEMS must be based on current site-specific data demonstrating a correlation between the monitored parameter(s) and the PAL pollutant emissions across the range of operation of the emissions unit; and

(*b*) Each CPMS or PEMS must sample, analyze, and record data at least every 15 minutes, or at another less frequent interval approved by the Administrator, while the emissions unit is operating.

(vi) *Emission factors.* An owner or operator using emission factors to monitor PAL pollutant emissions shall meet the following requirements:

(*a*) All emission factors shall be adjusted, if appropriate, to account for the degree of uncertainty or limitations in the factors' development;

(*b*) The emissions unit shall operate within the designated range of use for the emission factor, if applicable; and

(*c*) If technically practicable, the owner or operator of a significant emissions unit that relies on an emission factor to calculate PAL pollutant emissions shall conduct validation testing to determine a site-specific emission factor within 6 months of PAL permit issuance, unless the Administrator determines that testing is not required.

(vii) A source owner or operator must record and report maximum potential emissions without considering enforceable emission limitations or operational restrictions for an emissions unit during any period of time that there is no monitoring data, unless another method for determining emissions during such periods is specified in the PAL permit.

(viii) Notwithstanding the requirements in paragraphs (aa)(12)(iii) through (vii) of this section, where an owner or operator of an emissions unit cannot demonstrate a correlation between the monitored parameter(s) and the PAL pollutant emissions rate at all operating points of the emissions unit, the Administrator shall, at the time of permit issuance:

(*a*) Establish default value(s) for determining compliance with the PAL based on the highest potential emissions reasonably estimated at such operating point(s); or

(*b*) Determine that operation of the emissions unit during operating conditions when there is no correlation between monitored parameter(s) and the

PAL pollutant emissions is a violation of the PAL.

(ix) *Re-validation*. All data used to establish the PAL pollutant must be revalidated through performance testing or other scientifically valid means approved by the Administrator. Such testing must occur at least once every 5 years after issuance of the PAL.

(13) *Recordkeeping requirements*. (i) The PAL permit shall require an owner or operator to retain a copy of all records necessary to determine compliance with any requirement of paragraph (aa) of this section and of the PAL, including a determination of each emissions unit's 12-month rolling total emissions, for 5 years from the date of such record.

(ii) The PAL permit shall require an owner or operator to retain a copy of the following records for the duration of the PAL effective period plus 5 years:

(*a*) A copy of the PAL permit application and any applications for revisions to the PAL; and

(*b*) Each annual certification of compliance pursuant to title V and the data relied on in certifying the compliance.

(14) *Reporting and notification requirements*. The owner or operator shall submit semi-annual monitoring reports and prompt deviation reports to the Administrator in accordance with the applicable title V operating permit program. The reports shall meet the requirements in paragraphs (aa)(14)(i) through (iii) of this section.

(i) *Semi-annual report*. The semi-annual report shall be submitted to the Administrator within 30 days of the end of each reporting period. This report shall contain the information required in paragraphs (aa)(14)(i)(*a*) through (*g*) of this section.

(*a*) The identification of owner and operator and the permit number.

(*b*) Total annual emissions (expressed on a mass-basis in tons per year, or expressed in tons per year CO_2e) based on a 12-month rolling total for each month in the reporting period recorded pursuant to paragraph (aa)(13)(i) of this section.

(*c*) All data relied upon, including, but not limited to, any Quality Assurance or Quality Control data, in calculating the monthly and annual PAL pollutant emissions.

(*d*) A list of any emissions units modified or added to the major stationary source or GHG-only source during the preceding 6-month period.

(*e*) The number, duration, and cause of any deviations or monitoring malfunctions (other than the time associated with zero and span calibration checks), and any corrective action taken.

(*f*) A notification of a shutdown of any monitoring system, whether the shutdown was permanent or temporary, the reason for the shutdown, the anticipated date that the monitoring system will be fully operational or replaced with another monitoring system, and whether the emissions unit monitored by the monitoring system continued to operate, and the calculation of the emissions of the pollutant or the number determined by method included in the permit, as provided by (aa)(12)(vii).

(*g*) A signed statement by the responsible official (as defined by the applicable title V operating permit program) certifying the truth, accuracy, and completeness of the information provided in the report.

(ii) *Deviation report*. The major stationary source or GHG-only source owner or operator shall promptly submit reports of any deviations or exceedance of the PAL requirements, including periods where no monitoring is available. A report submitted pursuant to § 70.6(a)(3)(iii)(B) of this chapter shall satisfy this reporting requirement. The deviation reports shall be submitted within the time limits prescribed by the applicable program implementing § 70.6(a)(3)(iii)(B) of this chapter. The reports shall contain the following information:

(*a*) The identification of owner and operator and the permit number;

(*b*) The PAL requirement that experienced the deviation or that was exceeded;

(*c*) Emissions resulting from the deviation or the exceedance; and

(*d*) A signed statement by the responsible official (as defined by the applicable title V operating permit program) certifying the truth, accuracy, and

completeness of the information provided in the report.

(iii) *Re-validation results.* The owner or operator shall submit to the Administrator the results of any re-validation test or method within 3 months after completion of such test or method.

(15) *Transition requirements.* (i) The Administrator may not issue a PAL that does not comply with the requirements in paragraphs (aa)(1) through (15) of this section after March 3, 2003.

(ii) The Administrator may supersede any PAL that was established prior to March 3, 2003 with a PAL that complies with the requirements of paragraphs (aa)(1) through (15) of this section.

(bb) If any provision of this section, or the application of such provision to any person or circumstance, is held invalid, the remainder of this section, or the application of such provision to persons or circumstances other than those as to which it is held invalid, shall not be affected thereby.

(cc) Without regard to other considerations, routine maintenance, repair and replacement includes, but is not limited to, the replacement of any component of a process unit with an identical or functionally equivalent component(s), and maintenance and repair activities that are part of the replacement activity, provided that all of the requirements in paragraphs (cc)(1) through (3) of this section are met.

(1) *Capital cost threshold for equipment replacement.* (i) For an *electric utility steam generating unit,* as defined in §52.21(b)(31), the fixed capital cost of the replacement component(s) plus the cost of any associated maintenance and repair activities that are part of the replacement shall not exceed 20 percent of the replacement value of the process unit, at the time the equipment is replaced. For a process unit that is not an electric utility steam generating unit the fixed capital cost of the replacement component(s) plus the cost of any associated maintenance and repair activities that are part of the replacement shall not exceed 20 percent of the replacement value of the process unit, at the time the equipment is replaced.

(ii) In determining the replacement value of the process unit; and, except as otherwise allowed under paragraph (cc)(1)(iii) of this section, the owner or operator shall determine the replacement value of the process unit on an estimate of the fixed capital cost of constructing a new process unit, or on the current appraised value of the process unit.

(iii) As an alternative to paragraph (cc)(1)(ii) of this section for determining the replacement value of a process unit, an owner or operator may choose to use insurance value (where the insurance value covers only complete replacement), investment value adjusted for inflation, or another accounting procedure if such procedure is based on Generally Accepted Accounting Principles, provided that the owner or operator sends a notice to the reviewing authority. The first time that an owner or operator submits such a notice for a particular process unit, the notice may be submitted at any time, but any subsequent notice for that process unit may be submitted only at the beginning of the process unit's fiscal year. Unless the owner or operator submits a notice to the reviewing authority, then paragraph (cc)(1)(ii) of this section will be used to establish the replacement value of the process unit. Once the owner or operator submits a notice to use an alternative accounting procedure, the owner or operator must continue to use that procedure for the entire fiscal year for that process unit. In subsequent fiscal years, the owner or operator must continue to use this selected procedure unless and until the owner or operator sends another notice to the reviewing authority selecting another procedure consistent with this paragraph or paragraph (cc)(1)(ii) of this section at the beginning of such fiscal year.

(2) *Basic design parameters.* The replacement does not change the basic design parameter(s) of the process unit to which the activity pertains.

(i) Except as provided in paragraph (cc)(2)(iii) of this section, for a process unit at a steam electric generating facility, the owner or operator may select as its basic design parameters either maximum hourly heat input and maximum hourly fuel consumption rate or maximum hourly electric output rate and maximum steam flow

rate. When establishing fuel consumption specifications in terms of weight or volume, the minimum fuel quality based on British Thermal Units content shall be used for determining the basic design parameter(s) for a coal-fired electric utility steam generating unit.

(ii) Except as provided in paragraph (cc)(2)(iii) of this section, the basic design parameter(s) for any process unit that is not at a steam electric generating facility are maximum rate of fuel or heat input, maximum rate of material input, or maximum rate of product output. Combustion process units will typically use maximum rate of fuel input. For sources having multiple end products and raw materials, the owner or operator should consider the primary product or primary raw material when selecting a basic design parameter.

(iii) If the owner or operator believes the basic design parameter(s) in paragraphs (cc)(2)(i) and (ii) of this section is not appropriate for a specific industry or type of process unit, the owner or operator may propose to the reviewing authority an alternative basic design parameter(s) for the source's process unit(s). If the reviewing authority approves of the use of an alternative basic design parameter(s), the reviewing authority shall issue a permit that is legally enforceable that records such basic design parameter(s) and requires the owner or operator to comply with such parameter(s).

(iv) The owner or operator shall use credible information, such as results of historic maximum capability tests, design information from the manufacturer, or engineering calculations, in establishing the magnitude of the basic design parameter(s) specified in paragraphs (cc)(2)(i) and (ii) of this section.

(v) If design information is not available for a process unit, then the owner or operator shall determine the process unit's basic design parameter(s) using the maximum value achieved by the process unit in the five-year period immediately preceding the planned activity.

(vi) Efficiency of a process unit is not a basic design parameter.

(3) The replacement activity shall not cause the process unit to exceed any emission limitation, or operational limitation that has the effect of constraining emissions, that applies to the process unit and that is legally enforceable.

NOTE TO PARAGRAPH (cc): By a court order on December 24, 2003, this paragraph (cc) is stayed indefinitely. The stayed provisions will become effective immediately if the court terminates the stay. At that time, EPA will publish a document in the FEDERAL REGISTER advising the public of the termination of the stay.

[43 FR 26403, June 19, 1978]

EDITORIAL NOTE: For FEDERAL REGISTER citations affecting § 52.21, see the List of CFR Sections Affected, which appears in the Finding Aids section of the printed volume and at *www.fdsys.gov*.

EFFECTIVE DATE NOTE: At 76 FR 17556, Mar. 30, 2011, § 52.21(b)(2)(v) and (b)(3)(iii)(*c*) were stayed indefinitely.

§ 52.23 Violation and enforcement.

Failure to comply with any provisions of this part, or with any approved regulatory provision of a State implementation plan, or with any permit condition or permit denial issued pursuant to approved or promulgated regulations for the review of new or modified stationary or indirect sources, or with any permit limitation or condition contained within an operating permit issued under an EPA-approved program that is incorporated into the State implementation plan, shall render the person or governmental entity so failing to comply in violation of a requirement of an applicable implementation plan and subject to enforcement action under section 113 of the Clean Air Act. With regard to compliance schedules, a person or Governmental entity will be considered to have failed to comply with the requirements of this part if it fails to timely submit any required compliance schedule, if the compliance schedule when submitted does not contain each of the elements it is required to contain, or if the person or Governmental entity fails to comply with such schedule.

[39 FR 33512, Sept. 18, 1974, as amended at 54 FR 27285, June 28, 1989]

§52.24 Statutory restriction on new sources.

(a) Any area designated nonattainment pursuant to section 107(d) of the Act to which, immediately prior to the enactment of the Amendments to the Act of 1990 (November 15, 1990), a prohibition of construction or modification of major stationary sources was applied, shall retain that prohibition if such prohibition was applied by virtue of a finding of the Administrator that the State containing such an area:

(1) Failed to submit an implementation plan meeting the requirements of an approvable new source review permitting program; or

(2) Failed to submit an implementation plan that provided for timely attainment of the national ambient air quality standard for sulfur dioxide by December 31, 1982. This prohibition shall apply until the Administrator approves a plan for such area as meeting the applicable requirements of part D of title I of the Act as amended (NSR permitting requirements) or subpart 5 of part D of title I of the Act as amended (relating to attainment of the national ambient air quality standards for sulfur dioxide), as applicable.

(b) Permits to construct and operate as required by permit programs under section 172(c)(5) of the Act may not be issued for new or modified major stationary sources proposing to locate in nonattainment areas or areas in a transport region where the Administrator has determined that the applicable implementation plan is not being adequately implemented for the nonattainment area or transport region in which the proposed source is to be constructed or modified in accordance with the requirements of part D of title I of the Act.

(c) Whenever, on the basis of any information, the Administrator finds that a State is not in compliance with any requirement or prohibition of the Act relating to the construction of new sources or the modification of existing sources, the Administrator may issue an order under section 113(a)(5) of the Act prohibiting the construction or modification of any major stationary source in any area to which such requirement applies.

(d) The restrictions in paragraphs (a) and (b) of this section apply only to major stationary sources of emissions that cause or contribute to concentrations of the pollutant (or precursors, as applicable) for which the transport region or nonattainment area was designated such, and for which the applicable implementation plan is not being carried out in accordance with, or does not meet, the requirements of part D of title I of the Act.

(e) For any transport region or any area designated as nonattainment for any national ambient air quality standard, the restrictions in paragraphs (a) and (b) of this section shall apply to any major stationary source or major modification that would be major for the pollutant (or precursors, where applicable) for which the area is designated nonattainment or a transport region, if the stationary source or major modification would be constructed anywhere in the designated nonattainment area or transport region.

(f) The provisions in §51.165 of this chapter shall apply in interpreting the terms under this section.

(g) At such time that a particular source or modification becomes a major stationary source or major modification solely by virtue of a relaxation in any enforceable limitation which was established after August 7, 1980, on the capacity of the source or modification otherwise to emit a pollutant, such as a restriction on hours of operation, then:

(1) If the construction moratorium imposed pursuant to this section is still in effect for the nonattainment area or transport region in which the source or modification is located, then the permit may not be so revised; or

(2) If the construction moratorium is no longer in effect in that area, then the requirements of §51.165 of this chapter shall apply to the source or modification as though construction had not yet commenced on the source or modification.

(h) This section does not apply to major stationary sources or major modifications locating in a clearly defined part of a nonattainment area or transport region (such as a political subdivision of a State), where EPA

finds that a plan which meets the requirements of part D of title I of the Act is in effect and is being implemented in that part.

(i)–(j) [Reserved]

(k) For an area designated as nonattainment after July 1, 1979, the Emission Offset Interpretative Ruling, 40 CFR part 51, appendix S shall govern permits to construct and operate applied for during the period between the date of designation as nonattainment and the date the NSR permit program meeting the requirements of part D is approved. The Emission Offset Interpretative Ruling, 40 CFR part 51, appendix S, shall also govern permits to construct and operate applied for in any area designated under section 107(d) of the CAA as attainment or unclassifiable for ozone that is located in an ozone transport region prior to the date the NSR permitting program meeting the requirements of part D is approved.

[70 FR 71704, Nov. 29, 2005]

EDITORIAL NOTE: For FEDERAL REGISTER citations affecting § 52.24, see the List of CFR Sections Affected, which appears in the Finding Aids section of the printed volume and at *www.fdsys.gov*.

§ 52.26 [Reserved]

§ 52.27 Protection of visibility from sources in attainment areas.

(a) *Plan disapproval.* The provisions of this section are applicable to any State implementation plan which has been disapproved with respect to protection of visibility, in mandatory Class I Federal areas, from sources emitting pollutants in any portion of any State where the existing air quality is better than the national ambient air quality standards for such pollutants, and where a State PSD program has been approved as part of the applicable SIP pursuant to 40 CFR 51.24. Specific disapprovals are listed where applicable in Subparts B through DDD of this part. The provisions of this section have been incorporated by reference into the applicable implementation plans for various States, as provided in Subparts B through DDD of this part.

(b) *Definitions.* For purposes of this section, all terms shall have the meaning ascribed to them in the Clean Air Act, in the prevention of significant deterioration (PSD) program approved as part of the applicable SIP pursuant to 40 CFR 51.24 for the State, or in the protection of visibility program (40 CFR 51.301), all as in effect on July 12, 1985.

(c) *Federal visibility analysis.* Any person shall have the right, in connection with any application for a permit to construct a major stationary source or major modification, to request that the administrator take responsibility from the State for conducting the required review of a proposed source's impact on visibility in any Federal Class I area. If requested, the Administrator shall take such responsibility and conduct such review pursuant to paragraphs (e), (f) and (g) of this section in any case where the State fails to provide all of the procedural steps listed in paragraph (d) of this section. A request pursuant to this paragraph must be made within 60 days of the notice soliciting public comment on a permit, unless such notice is not properly given. The Administrator will not entertain requests challenging the substance of any State action concerning visibility where the State has provided all of the procedural steps listed in paragraph (d) of this section.

(d) *Procedural steps in visibility review.* (1) The reviewing authority must provide written notification to all affected Federal land managers of any permit application for any proposed new major stationary source or major modification that may affect visibility in any Federal Class I area. Such notification shall include a copy of all information relevant to the permit application and shall be given within 30 days of receipt and at least 60 days prior to any public hearing on the application for a permit to construct. Such notification shall include the proposed source's anticipated impacts on visibility in any Federal Class I area as provided by the applicant. Notification must also be given to all affected Federal land managers within 30 days of receipt of any advance notification of any such permit application.

(2) The reviewing authority must consider any analysis performed by the Federal land managers, provided within 30 days of the notification required

by paragraph (d)(1) of this section, that shows that such proposed new major stationary source or major modification may have:

(i) An adverse impact on visibility in any Federal Class I area, or

(ii) An adverse impact on visibility in an integral vista codified in part 81 of this title.

(3) Where the reviewing authority finds that such an analysis does not demonstrate that the effect in paragraphs (d)(2) (i) or (ii) of this section will occur, either an explanation of its decision or notification as to where the explanation can be obtained must be included in the notice of public hearing.

(4) Where the reviewing authority finds that such an analysis does demonstrate that the effect in paragraph (d)(2)(i) of this section will occur, the permit shall not be issued.

(5) Where the reviewing authority finds that such an analysis does demonstrate that the effect in paragraph (d)(2)(ii) of this section will occur, the reviewing authority may issue a permit if the emissions from the source or modification will be consistent with reasonable progress toward the national goal. In making this decision, the reviewing authority may take into account the costs of compliance, the time necessary for compliance, the energy and nonair quality environmental impacts of compliance, and the useful life of the source.

(e) *Federal land manager notification.* The Administrator shall provide all of the procedural steps listed in paragraph (d) of this section in conducting reviews pursuant to this section.

(f) *Monitoring.* The Administrator may require monitoring of visibility in any Federal Class I area near the proposed new stationary source or major modification for such purposes and by such means as the Administrator deems necessary and appropriate.

(g) *Public participation.* The Administrator shall follow the applicable procedures at 40 CFR part 124 in conducting reviews under this section. The Administrator shall follow the procedures at 40 CFR 52.21(q) as in effect on August 7, 1980, to the extent that the procedures of 40 CFR part 124 do not apply.

(h) *Federal permit.* In any case where the Administrator has made a finding that a State consistently fails or is unable to provide the procedural steps listed in paragraph (d) of this section, the Administrator shall require all prospective permit applicants in such State to apply directly to the Administrator, and the Administrator shall conduct a visibility review pursuant to this section for all permit applications.

[50 FR 28551, July 12, 1985, as amended at 52 FR 45137, Nov. 24, 1987]

§ 52.28 Protection of visibility from sources in nonattainment areas.

(a) *Plan disapproval.* The provisions of this section are applicable to any State implementation plan which has been disapproved with respect to protection of visibility, in mandatory Class I Federal areas where visibility is considered an important value, from sources emitting pollutants in any portion of any State where the existing air quality is not in compliance with the national ambient air quality standards for such pollutants. Specific disapprovals are listed where applicable in Subparts B through DDD of this part. The provisions of this section have been incorporated into the applicable implementation plans for various States, as provided in Subparts B through DDD of this part.

(b) *Definitions.* For the purposes of this section:

(1) *Visibility protection area* means any area listed in 40 CFR 81.401–81.436 (1984).

(2) All other terms shall have the meaning ascribed to them in the protection of visibility program (40 CFR 51.301) or the prevention of significant deterioration (PSD) program either approved as part of the applicable SIP pursuant to 40 CFR 51.24 or in effect for the applicable SIP pursuant to 40 CFR 52.21, all as in effect on July 12, 1985.

(c) *Review of major stationary sources and major modifications—source applicability and exemptions.* (1) No stationary source or modification to which the requirements of this section apply shall begin actual construction without a permit which states that the stationary source or modification would meet those requirements. The Administrator has sole authority to issue any such permit unless the authority has

been delegated pursuant to paragraph (i) of this section.

(2) The requirements of this section shall apply to construction of any new major stationary source or major modification that would both be constructed in an area classified as nonattainment under section 107(d)(1)(A), (B) or (C) of the Clean Air Act and potentially have an impact on visibility in any visibility protection area.

(3) The requirements of this section shall apply to any such major stationary source and any such major modification with respect to each pollutant subject to regulation under the Clean Air Act that it would emit, except as this section otherwise provides.

(4) The requirements of this section shall not apply to a particular major stationary source or major modification, if:

(i) The source or modification would be a nonprofit health or nonprofit educational institution, or a major modification would occur at such an institution, and the governor of the State in which the source or modification would be located requests that it be exempt from those requirements; or

(ii) The source or modification would be a major stationary source or major modification only if fugitive emissions, to the extent quantifiable, are considered in calculating the potential to emit of the stationary source or modification and the source does not belong to any of the following categories:

(A) Coal cleaning plants (with thermal dryers);

(B) Kraft pulp mills;

(C) Portland cement plants;

(D) Primary zinc smelters;

(E) Iron and steel mills;

(F) Primary aluminum ore reduction plants;

(G) Primary copper smelters;

(H) Municipal incinerators capable of charging more than 250 tons of refuse per day;

(I) Hydrofluoric, sulfuric, or nitric acid plants;

(J) Petroleum refineries;

(K) Lime plants;

(L) Phosphate rock processing plants;

(M) Coke oven batteries;

(N) Sulfur recovery plants;

(O) Carbon black plants (furnace process);

(P) Primary lead smelters;

(Q) Fuel conversion plants;

(R) Sintering plants;

(S) Secondary metal production plants;

(T) Chemical process plants;

(U) Fossil-fuel boiler (or combination thereof) totaling more than 250 million British thermal units per hour heat input;

(V) Petroleum storage and transfer units with a total storage capacity exceeding 300,000 barrels;

(W) Taconite ore processing plants;

(X) Glass fiber processing plants;

(Y) Charcoal production plants;

(Z) Fossil fuel-fired steam electric plants of more than 250 million British thermal units per hour heat input;

(AA) Any other stationary source category which, as of August 7, 1980, is being regulated under section 111 or 112 of the Act; or

(iii) The source is a portable stationary source which has previously received a permit under this section, and

(A) The owner or operator proposes to relocate the source and emissions of the source at the new location would be temporary; and

(B) The emissions from the source would not exceed its allowable emissions; and

(C) The emissions from the source would impact no Class I area and no area where an applicable increment is known to be violated; and

(D) Reasonable notice is given to the Administrator, prior to the relocation, identifying the proposed new location and the probable duration of operation at the new location. Such notice shall be given to the Administrator not less than 10 days in advance of the proposed relocation, unless a different time duration is previously approved by the Administrator.

(5) The requirements of this section shall not apply to a major stationary source or major modification with respect to a particular pollutant if the owner or operator demonstrates that, as to that pollutant, the source or modification is located in an area designated as attainment under section 107 of the Clean Air Act.

(6) The requirements of this section shall not apply to a major stationary

source or major modification with respect to a particular pollutant, if the allowable emissions of that pollutant from the source, or the net emissions increase of that pollutant from the modification:

(i) Would impact no Class I area and no area where an applicable increment is known to be violated, and

(ii) Would be temporary.

(d) *Visibility Impact Analyses.* The owner or operator of a source shall provide an analysis of the impairment to visibility that would occur as a result of the source or modification and general commercial, residential, industrial and other growth associated with the source or modification.

(e) *Federal land manager notification.* (1) The Federal land manager and the Federal official charged with direct responsibility for management of Federal Class I areas have an affirmative responsibility to protect the air quality related values (including visibility) of such lands and to consider, in consultation with the Administrator, whether a proposed source or modification will have an adverse impact on such values.

(2) The Administrator shall provide written notification to all affected Federal land managers of any permit application for any proposed new major stationary source or major modification that may affect visibility in any visibility protection area. The Administrator shall also provide for such notification to the Federal official charged with direct responsibility for management of any lands within any such area. Such notification shall include a copy of all information relevant to the permit application and shall be given within 30 days of receipt and at least 60 days prior to any public hearing on the application for a permit to construct. Such notification shall include an analysis of the proposed source's anticipated impacts on visibility in any visibility protection area. The Administrator shall also notify all affected FLM's within 30 days of receipt of any advance notification of any such permit application.

(3) The Administrator shall consider any analysis performed by the Federal land manager, provided within 30 days of the notification required by paragraph (e)(2) of this section, that such proposed new major stationary source or major modification may have an adverse impact on visibility in any visibility protection area. Where the Administrator finds that such an analysis does not demonstrate to the satisfaction of the Administrator that an adverse impact on visibility will result in the visibility protection area, the Administrator must, in the notice of public hearing, either explain his decision or give notice as to where the explanation can be obtained.

(f) *Public participation.* The Administrator shall follow the applicable procedures of 40 CFR part 124 in processing applications under this section. The Administrator shall follow the procedures at 40 CFR 52.21(q) as in effect on August 7, 1980, to the extent that the procedures of 40 CFR part 124 do not apply.

(g) *National visibility goal.* The Administrator shall only issue permits to those sources whose emissions will be consistent with making reasonable progress toward the national goal of preventing any future, and remedying any existing, impairment of visibility in visibility protection areas which impairment results from man-made air pollution. In making the decision to issue a permit, the Administrator may take into account the costs of compliance, the time necessary for compliance, the energy and nonair quality environmental impacts of compliance, and the useful life of the source.

(h) *Monitoring.* The Administrator may require monitoring of visibility in any visibility protection area near the proposed new stationary source or major modification for such purposes and by such means as the Administrator deems necessary and appropriate.

(i) *Delegation of authority.* (1) The Administrator shall have the authority to delegate the responsibility for conducting source review pursuant to this section to any agency in accordance with paragraphs (i)(2) and (3) of this section.

(2) Where the Administrator delegates the responsibility for conducting source review under this section to any agency other than a Regional Office of the Environmental Protection Agency, the following provisions shall apply:

(i) Where the delegate agency is not an air pollution control agency it shall consult with the appropriate State and local air pollution control agency prior to making any determination under this section. Similarly, where the delegate agency does not have continuing responsibility for managing land use, it shall consult with the appropriate State and local agency primarily responsible for managing land use prior to making any determination under this section.

(ii) The delegate agency shall submit a copy of any public comment notice required under paragraph (f) of this section to the Administrator through the appropriate Regional Office.

(3) The Administrator's authority for reviewing a source or modification located on an Indian Reservation shall not be redelegated other than to a Regional Office of the Environmental Protection Agency, except where the State has assumed jurisdiction over such land under other laws. Where the State has assumed such jurisdiction, the Administrator may delegate his authority to the States in accordance with paragraph (i)(2) of this section.

[50 FR 28551, July 12, 1985]

§ 52.29 [Reserved]

§ 52.30 Criteria for limiting application of sanctions under section 110(m) of the Clean Air Act on a statewide basis.

(a) *Definitions.* For the purpose of this section:

(1) The term ''political subdivision'' refers to the representative body that is responsible for adopting and/or implementing air pollution controls for one, or any combination of one or more of the following: city, town, borough, county, parish, district, or any other geographical subdivision created by, or pursuant to, Federal or State law. This will include any agency designated under section 174, 42 U.S.C. 7504, by the State to carry out the air planning responsibilities under part D.

(2) The term ''required activity'' means the submission of a plan or plan item, or the implementation of a plan or plan item.

(3) The term ''deficiency'' means the failure to perform a required activity as defined in paragraph (a)(2) of this section.

(4) For purposes of § 52.30, the terms ''plan'' or ''plan item'' mean an implementation plan or portion of an implementation plan or action needed to prepare such plan required by the Clean Air Act, as amended in 1990, or in response to a SIP call issued pursuant to section 110(k)(5) of the Act.

(b) *Sanctions.* During the 24 months after a finding, determination, or disapproval under section 179(a) of the Clean Air Act is made, EPA will not impose sanctions under section 110(m) of the Act on a statewide basis if the Administrator finds that one or more political subdivisions of the State are principally responsible for the deficiency on which the finding, disapproval, or determination as provided under section 179(a)(1) through (4) is based.

(c) *Criteria.* For the purposes of this provision, EPA will consider a political subdivision to be principally responsible for the deficiency on which a section 179(a) finding is based, if all five of the following criteria are met.

(1) The State has provided adequate legal authority to a political subdivision to perform the required activity.

(2) The required activity is one which has traditionally been performed by the local political subdivision, or the responsibility for performing the required activity has been delegated to the political subdivision.

(3) The State has provided adequate funding or authority to obtain funding (when funding is necessary to carry out the required activity) to the political subdivision to perform the required activity.

(4) The political subdivision has agreed to perform (and has not revoked that agreement), or is required by State law to accept responsibility for performing, the required activity.

(5) The political subdivision has failed to perform the required activity.

(d) *Imposition of sanctions.* (1) If all of the criteria in paragraph (c) of this section have been met through the action or inaction of one political subdivision, EPA will not impose sanctions on a statewide basis.

(2) If not all of the criteria in paragraph (c) of this section have been met

through the action or inaction of one political subdivision, EPA will determine the area for which it is reasonable and appropriate to apply sanctions.

[59 FR 1484, Jan. 11, 1994]

§ 52.31 Selection of sequence of mandatory sanctions for findings made pursuant to section 179 of the Clean Air Act.

(a) *Purpose*. The purpose of this section is to implement 42 U.S.C. 7509(a) of the Act, with respect to the sequence in which sanctions will automatically apply under 42 U.S.C. 7509(b), following a finding made by the Administrator pursuant to 42 U.S.C. 7509(a).

(b) *Definitions*. All terms used in this section, but not specifically defined herein, shall have the meaning given them in § 52.01.

(1) *1990 Amendments* means the 1990 Amendments to the Clean Air Act (Pub. L. No. 101–549, 104 Stat. 2399).

(2) *Act* means Clean Air Act, as amended in 1990 (42 U.S.C. 7401 *et seq.* (1991)).

(3) *Affected area* means the geographic area subject to or covered by the Act requirement that is the subject of the finding and either, for purposes of the offset sanction under paragraph (e)(1) of this section and the highway sanction under paragraph (e)(2) of this section, is or is within an area designated nonattainment under 42 U.S.C. 7407(d) or, for purposes of the offset sanction under paragraph (e)(1) of this section, is or is within an area otherwise subject to the emission offset requirements of 42 U.S.C. 7503.

(4) *Criteria pollutant* means a pollutant for which the Administrator has promulgated a national ambient air quality standard pursuant to 42 U.S.C. 7409 (i.e., ozone, lead, sulfur dioxide, particulate matter, carbon monoxide, nitrogen dioxide).

(5) *Findings* or *Finding* refer(s) to one or more of the findings, disapprovals, and determinations described in subsection 52.31 (c).

(6) *NAAQS* means national ambient air quality standard the Administrator has promulgated pursuant to 42 U.S.C. 7409.

(7) *Ozone precursors* mean nitrogen oxides (NO_X) and volatile organic compounds (VOC).

(8) *Part D* means part D of title I of the Act.

(9) *Part D SIP or SIP revision* or *plan* means a State implementation plan or plan revision that States are required to submit or revise pursuant to part D.

(10) *Precursor* means pollutant which is transformed in the atmosphere (later in time and space from point of emission) to form (or contribute to the formation of) a criteria pollutant.

(c) *Applicability*. This section shall apply to any State in which an affected area is located and for which the Administrator has made one of the following findings, with respect to any part D SIP or SIP revision required under the Act:

(1) A finding that a State has failed, for an area designated nonattainment under 42 U.S.C. 7407(d), to submit a plan, or to submit one or more of the elements (as determined by the Administrator) required by the provisions of the Act applicable to such an area, or has failed to make a submission for such an area that satisfies the minimum criteria established in relation to any such element under 42 U.S.C. 7410(k);

(2) A disapproval of a submission under 42 U.S.C. 7410(k), for an area designated nonattainment under 42 U.S.C. 7407(d), based on the submission's failure to meet one or more of the elements required by the provisions of the Act applicable to such an area;

(3)(i) A determination that a State has failed to make any submission required under the Act, other than one described under paragraph (c)(1) or (c)(2) of this section, including an adequate maintenance plan, or has failed to make any submission, required under the Act, other than one described under paragraph (c)(1) or (c)(2) of this section, that satisfies the minimum criteria established in relation to such submission under 42 U.S.C. 7410(k)(1)(A); or

(ii) A disapproval in whole or in part of a submission described under paragraph (c)(3)(i) of this section; or

(4) A finding that any requirement of an approved plan (or approved part of a plan) is not being implemented.

(d) *Sanction application sequencing.* (1) To implement 42 U.S.C. 7509(a), the offset sanction under paragraph (e)(1) of this section shall apply in an affected area 18 months from the date when the Administrator makes a finding under paragraph (c) of this section unless the Administrator affirmatively determines that the deficiency forming the basis of the finding has been corrected. To further implement 42 U.S.C. 7509(a), the highway sanction under paragraph (e)(2) of this section shall apply in an affected area 6 months from the date the offset sanction under paragraph (e)(1) of this section applies, unless the Administrator affirmatively determines that the deficiency forming the basis of the finding has been corrected. For the findings under paragraphs (c)(2), (c)(3)(ii), and (c)(4) of this section, the date of the finding shall be the effective date as defined in the final action triggering the sanctions clock.

(2)(i) Notwithstanding paragraph (d)(1) of this section, to further implement 42 U.S.C. 7509(a), following the findings under paragraphs (c)(2) and (c)(3)(ii) of this section, if the State has submitted a revised plan to correct the deficiency prompting the finding and the Administrator, prior to 18 months from the finding, has proposed to fully or conditionally approve the revised plan and has issued an interim final determination that the revised plan corrects the deficiency prompting the finding, application of the offset sanction under paragraph (e)(1) of this section shall be deferred unless and until the Administrator proposes to or takes final action to disapprove the plan in whole or in part. If the Administrator issues such a proposed or final disapproval of the plan, the offset sanction under paragraph (e)(1) of this section shall apply in the affected area on the later of the date the Administrator issues such a proposed or final disapproval, or 18 months following the finding that started the sanctions clock. The highway sanction under paragraph (e)(2) of this section shall apply in the affected area 6 months after the date the offset sanction under paragraph (e)(1) of this section applies, unless the Administrator determines that the deficiency forming the basis of the finding has been corrected.

(ii) Notwithstanding paragraph (d)(1) of this section, to further implement 42 U.S.C. 7509(a), following the findings under paragraphs (c)(2) and (c)(3)(ii) of this section, if the State has submitted a revised plan to correct the deficiency prompting the finding and after 18 but before 24 months from the finding the Administrator has proposed to fully or conditionally approve the revised plan and has issued an interim final determination that the revised plan corrects the deficiency prompting the finding, application of the offset sanction under paragraph (e)(1) of this section shall be stayed and application of the highway sanction under paragraph (e)(2) of this section shall be deferred unless and until the Administrator proposes to or takes final action to disapprove the plan in whole or in part. If the Administrator issues such a proposed or final disapproval of the plan, the offset sanction under paragraph (e)(1) of this section shall reapply in the affected area on the date the Administrator issues such a proposed or final disapproval. The highway sanction under paragraph (e)(2) of this section shall apply in the affected area on the later of 6 months from the date the offset sanction under paragraph (e)(1) of this section first applied in the affected area, unless the Administrator determines that the deficiency forming the basis of the finding has been corrected, or immediately if the proposed or final disapproval occurs more than 6 months after initial application of the offset sanction under paragraph (e)(1) of this section.

(iii) Notwithstanding paragraph (d)(1) of this section, to further implement 42 U.S.C. 7509(a), following the findings under paragraphs (c)(2) and (c)(3)(ii) of this section, if the State has submitted a revised plan to correct the deficiency prompting the finding and more than 24 months after the finding the Administrator has proposed to fully or conditionally approve the revised plan and has issued an interim final determination that the revised plan corrects the deficiency prompting the finding, application of the offset sanction under paragraph (e)(1) of this section and application of the highway sanction under paragraph (e)(2) of this section

shall be stayed unless and until the Administrator proposes to or takes final action to disapprove the plan in whole or in part. If the Administrator issues such a proposed or final disapproval, the offset sanction under paragraph (e)(1) of this section and the highway sanction under paragraph (e)(2) of this section shall reapply in the affected area on the date the Administrator issues such proposed or final disapproval.

(3)(i) Notwithstanding paragraph (d)(1) of this section, to further implement 42 U.S.C. 7509(a), following the findings under paragraphs (c)(2) and (c)(3)(ii) of this section, if the State has submitted a revised plan to correct the deficiency prompting the finding and the Administrator, prior to 18 months from the finding, has conditionally-approved the revised plan and has issued an interim final determination that the revised plan corrects the deficiency prompting the finding, application of the offset sanction under paragraph (e)(1) of this section shall be deferred unless and until the conditional approval converts to a disapproval or the Administrator proposes to or takes final action to disapprove in whole or in part the revised SIP the State submits to fulfill the commitment in the conditionally-approved plan. If the conditional approval so becomes a disapproval or the Administrator issues such a proposed or final disapproval, the offset sanction under paragraph (e)(1) of this section shall apply in the affected area on the later of the date the approval becomes a disapproval or the Administrator issues such a proposed or final disapproval, whichever is applicable, or 18 months following the finding that started the sanctions clock. The highway sanction under paragraph (e)(2) of this section shall apply in the affected area 6 months after the date the offset sanction under paragraph (e)(1) of this section applies, unless the Administrator determines that the deficiency forming the basis of the finding has been corrected.

(ii) Notwithstanding paragraph (d)(1) of this section, to further implement 42 U.S.C. 7509(a), following the findings under paragraphs (c)(2) and (c)(3)(ii) of this section, if the State has submitted a revised plan to correct the deficiency prompting the finding and after 18 but before 24 months from the finding the Administrator has conditionally approved the revised plan and has issued an interim final determination that the revised plan corrects the deficiency prompting the finding, application of the offset sanction under paragraph (e)(1) of this section shall be stayed and application of the highway sanction under paragraph (e)(2) of this section shall be deferred unless and until the conditional approval converts to a disapproval or the Administrator proposes to or takes final action to disapprove in whole or in part the revised SIP the State submits to fulfill the commitment in the conditionally-approved plan. If the conditional approval so becomes a disapproval or the Administrator issues such a proposed or final disapproval, the offset sanction under paragraph (e)(1) of this section shall reapply in the affected area on the date the approval becomes a disapproval or the Administrator issues such a proposed or final disapproval, whichever is applicable. The highway sanction under paragraph (e)(2) of this section shall apply in the affected area on the later of 6 months from the date the offset sanction under paragraph (e)(1) of this section first applied in the affected area, unless the Administrator determines that the deficiency forming the basis of the finding has been corrected, or immediately if the conditional approval becomes a disapproval or the Administrator issues such a proposed or final disapproval, whichever is applicable, more than 6 months after initial application of the offset sanction under paragraph (e)(1) of this section.

(iii) Notwithstanding paragraph (d)(1) of this section, to further implement 42 U.S.C. 7509(a), following the findings under paragraphs (c)(2) and (c)(3)(ii) of this section, if the State has submitted a revised plan to correct the deficiency prompting the finding and after 24 months from the finding the Administrator has conditionally approved the revised plan and has issued an interim final determination that the revised plan corrects the deficiency prompting the finding, application of the offset sanction under paragraph (e)(1) of this section and application of the highway sanction under paragraph (e)(2) of this

section shall be stayed unless and until the conditional approval converts to a disapproval or the Administrator proposes to or takes final action to disapprove in whole or in part the revised SIP the State submits to fulfill its commitment in the conditionally-approved plan. If the conditional approval so becomes a disapproval or the Administrator issues such a proposed or final disapproval, the offset sanction under paragraph (e)(1) of this section and the highway sanction under paragraph (e)(2) of this section shall reapply in the affected area on the date the conditional approval becomes a disapproval or the Administrator issues such a proposed or final disapproval, whichever is applicable.

(4)(i) Notwithstanding paragraph (d)(1) of this section, to further implement 42 U.S.C. 7509(a), following findings under paragraph (c)(4) of this section, if the Administrator, prior to 18 months from the finding, has proposed to find that the State is implementing the approved plan and has issued an interim final determination that the deficiency prompting the finding has been corrected, application of the offset sanction under paragraph (e)(1) of this section shall be deferred unless and until the Administrator preliminarily or finally determines, through a proposed or final finding, that the State is not implementing the approved plan and that, therefore, the State has not corrected the deficiency. If the Administrator so preliminarily or finally determines that the State has not corrected the deficiency, the offset sanction under paragraph (e)(1) of this section shall apply in the affected area on the later of the date the Administrator proposes to take action or takes final action to find that the finding of nonimplementation has not been corrected, or 18 months following the finding that started the sanctions clock. The highway sanction under paragraph (e)(2) of this section shall apply in the affected area 6 months after the date the offset sanction under paragraph (e)(1) of this section first applies, unless the Administrator preliminarily or finally determines that the deficiency forming the basis of the finding has been corrected.

(ii) Notwithstanding paragraph (d)(1) of this section, to further implement 42 U.S.C. 7509(a), following findings under paragraph (c)(4) of this section, if after 18 months but before 24 months from the finding the Administrator has proposed to find that the State is implementing the approved plan and has issued an interim final determination that the deficiency prompting the finding has been corrected, application of the offset sanction under paragraph (e)(1) of this section shall be stayed and application of the highway sanction under paragraph (e)(2) of this section shall be deferred unless and until the Administrator preliminarily or finally determines, through a proposed or final finding, that the State is not implementing the approved plan and that, therefore, the State has not corrected the deficiency. If the Administrator so preliminarily or finally determines that the State has not corrected the deficiency, the offset sanction under paragraph (e)(1) of this section shall reapply in the affected area on the date the Administrator proposes to take action or takes final action to find that the finding of nonimplementation has not been corrected. The highway sanction under paragraph (e)(2) of this section shall apply in the affected area on the later of 6 months from the date the offset sanction under paragraph (e)(1) of this section first applied in the affected area, unless the Administrator preliminarily or finally determines that the deficiency forming the basis of the finding has been corrected, or immediately if EPA's proposed or final action finding the deficiency has not been corrected occurs more than 6 months after initial application of the offset sanction under paragraph (e)(1) of this section.

(iii) Notwithstanding paragraph (d)(1) of this section, to further implement 42 U.S.C. 7509(a), following findings under paragraph (c)(4) of this section, if after 24 months from the finding the Administrator has proposed to find that the State is implementing the approved plan and has issued an interim final determination that the deficiency prompting the finding has been corrected, application of the offset sanction under paragraph (e)(1) of this section and the highway sanction under

paragraph (e)(2) of this section shall be stayed unless and until the Administrator preliminarily or finally determines, through a proposed or final finding, that the State is not implementing the approved plan, and that, therefore, the State has not corrected the deficiency. If the Administrator so preliminarily or finally determines that the State has not corrected the deficiency, the offset sanction under paragraph (e)(1) of this section and the highway sanction under paragraph (e)(2) of this section shall reapply in the affected area on the date the Administrator proposes to take action or takes final action to find that the finding of nonimplementation has not been corrected.

(5) Any sanction clock started by a finding under paragraph (c) of this section will be permanently stopped and sanctions applied, stayed or deferred will be permanently lifted upon a final EPA finding that the deficiency forming the basis of the finding has been corrected. For a sanctions clock and applied sanctions based on a finding under paragraphs (c)(1) and (c)(3)(i) of this section, a finding that the deficiency has been corrected will occur by letter from the Administrator to the State governor. For a sanctions clock or applied, stayed or deferred sanctions based on a finding under paragraphs (c)(2) and (c)(3)(ii) of this section, a finding that the deficiency has been corrected will occur through a final notice in the FEDERAL REGISTER fully approving the revised SIP. For a sanctions clock or applied, stayed or deferred sanctions based on a finding under paragraph (c)(4) of this section, a finding that the deficiency has been corrected will occur through a final notice in the FEDERAL REGISTER finding that the State is implementing the approved SIP.

(6) Notwithstanding paragraph (d)(1) of this section, nothing in this section will prohibit the Administrator from determining through notice-and-comment rulemaking that in specific circumstances the highway sanction, rather than the offset sanction, shall apply 18 months after the Administrator makes one of the findings under paragraph (c) of this section, and that the offset sanction, rather than the highway sanction, shall apply 6 months from the date the highway sanction applies.

(e) *Available sanctions and method for implementation*—(1) *Offset sanction.* (i) As further set forth in paragraphs (e)(1)(ii)–(e)(1)(vi) of this section, the State shall apply the emissions offset requirement in the timeframe prescribed under paragraph (d) of this section on those affected areas subject under paragraph (d) of this section to the offset sanction. The State shall apply the emission offset requirements in accordance with 42 U.S.C. 7503 and 7509(b)(2), at a ratio of at least two units of emission reductions for each unit of increased emissions of the pollutant(s) and its (their) precursors for which the finding(s) under paragraph (c) of this section is (are) made. If the deficiency prompting the finding under paragraph (c) of this section is not specific to one or more particular pollutants and their precursors, the 2-to-1 ratio shall apply to all pollutants (and their precursors) for which an affected area within the State listed in paragraph (e)(1)(i) of this section is required to meet the offset requirements of 42 U.S.C. 7503.

(ii) Notwithstanding paragraph (e)(1)(i) of this section, when a finding is made with respect to a requirement for the criteria pollutant ozone or when the finding is not pollutant-specific, the State shall not apply the emissions offset requirements at a ratio of at least 2-to-1 for emission reductions to increased emissions for nitrogen oxides where, under 42 U.S.C. 7511a(f), the Administrator has approved an NO_X exemption for the affected area from the Act's new source review requirements under 42 U.S.C. 7501–7515 for NO_X or where the affected area is not otherwise subject to the Act's new source review requirements for emission offsets under 42 U.S.C. 7501–7515 for NO_X.

(iii) Notwithstanding paragraph (e)(1)(i) of this section, when a finding under paragraph (c) of this section is made with respect to PM–10, or the finding is not pollutant-specific, the State shall not apply the emissions offset requirements, at a ratio of at least 2-to-1 for emission reductions to increased emissions to PM–10 precursors

if the Administrator has determined under 42 U.S.C. 7513a(e) that major stationary sources of PM–10 precursors do not contribute significantly to PM–10 levels which exceed the NAAQS in the affected area.

(iv) For purposes of applying the emissions offset requirement set forth in 42 U.S.C. 7503, at the 2-to-1 ratio required under this section, the State shall comply with the provisions of a State-adopted new source review (NSR) program that EPA has approved under 42 U.S.C. 7410(k)(3) as meeting the nonattainment area NSR requirements of 42 U.S.C. 7501–7515, as amended by the 1990 Amendments, or, if no plan has been so approved, the State shall comply directly with the nonattainment area NSR requirements specified in 42 U.S.C. 7501–7515, as amended by the 1990 Amendments, or cease issuing permits to construct and operate major new or modified sources as defined in those requirements. For purposes of applying the offset requirement under 42 U.S.C. 7503 where EPA has not fully approved a State's NSR program as meeting the requirements of part D, the specifications of those provisions shall supersede any State requirement that is less stringent or inconsistent.

(v) For purposes of applying the emissions offset requirement set forth in 42 U.S.C. 7503, any permit required pursuant to 42 U.S.C. 7503 and issued on or after the date the offset sanction applies under paragraph (d) of this section shall be subject to the enhanced 2-to-1 ratio under paragraph (e)(1)(i) of this section.

(2) *Highway funding sanction.* The highway sanction shall apply, as provided in 42 U.S.C. 7509(b)(1), in the timeframe prescribed under paragraph (d) of this section on those affected areas subject under paragraph (d) of this section to the highway sanction, but shall apply only to those portions of affected areas that are designated nonattainment under 40 CFR part 81.

[59 FR 39859, Aug. 4, 1994]

§ 52.32 Sanctions following findings of SIP inadequacy.

For purposes of the SIP revisions required by § 51.120, EPA may make a finding under section 179(a) (1)–(4) of the Clean Air Act, 42 U.S.C. 7509(a) (1)–(4), starting the sanctions process set forth in section 179(a) of the Clean Air Act. Any such finding will be deemed a finding under § 52.31(c) and sanctions will be imposed in accordance with the order of sanctions and the terms for such sanctions established in § 52.31.

[60 FR 4737, Jan. 24, 1995]

§ 52.33 Compliance certifications.

(a) For the purpose of submitting compliance certifications, nothing in this part or in a plan promulgated by the Administrator shall preclude the use, including the exclusive use, of any credible evidence or information, relevant to whether a source would have been in compliance with applicable requirements if the appropriate performance or compliance test had been performed.

(b) For all federal implementation plans, paragraph (a) of this section is incorporated into the plan.

[62 FR 8328, Feb. 24, 1997]

§ 52.34 Action on petitions submitted under section 126 relating to emissions of nitrogen oxides.

(a) *Definitions.* For purposes of this section, the following definitions apply:

(1) *Administrator* means the Administrator of the United States Environmental Protection Agency or the Administrator's duly authorized representative.

(2) *Large Electric Generating Units (large EGUs)* means:

(i) For units that commenced operation before January 1, 1997, a unit serving during 1995 or 1996 a generator that had a nameplate capacity greater than 25 MWe and produced electricity for sale under a firm contract to the electric grid.

(ii) For units that commenced operation on or after January 1, 1997 and before January 1, 1999, a unit serving at any time during 1997 or 1998 a generator that had a nameplate capacity greater than 25 MWe and produced electricity for sale under a firm contract to the electric grid.

(iii) For units that commence operation on or after January 1, 1999, a unit serving at any time a generator that has a nameplate capacity greater than

25 MWe and produces electricity for sale.

(3) *Large Non-Electric Generating Units (large non-EGUs)* means:

(i) For units that commenced operation before January 1, 1997, a unit that has a maximum design heat input greater than 250 mmBtu/hr and that did not serve during 1995 or 1996 a generator producing electricity for sale under a firm contract to the electric grid.

(ii) For units that commenced operation on or after January 1, 1997 and before January 1, 1999, a unit that has a maximum design heat input greater than 250 mmBtu/hr and that did not serve at any time during 1997 or 1998 a generator producing electricity for sale under a firm contract to the electric grid.

(iii) For units that commence operation on or after January 1, 1999, a unit with a maximum design heat input greater than 250 mmBtu/hr that:

(A) At no time serves a generator producing electricity for sale; or

(B) At any time serves a generator producing electricity for sale, if any such generator has a nameplate capacity of 25 MWe or less and has the potential to use 50 percent or less of the potential electrical output capacity of the unit.

(4) *New sources* means new and modified sources.

(5) *NO_X* means oxides of nitrogen.

(6) *OTAG* means the Ozone Transport Assessment Group (active 1995–1997), a national work group that addressed the problem of ground-level ozone and the long-range transport of air pollution across the Eastern United States. The OTAG was a partnership between EPA, the Environmental Council of the States, and various industry and environmental groups.

(7) *Ozone season* means the period of time beginning May 1 of a year and ending on September 30 of the same year, inclusive.

(8) *Potential electrical output capacity* means, with regard to a unit, 33 percent of the maximum design heat input of the unit.

(9) *Unit* means a fossil-fuel fired stationary boiler, combustion turbine, or combined cycle system.

(b) *Purpose and applicability*. Paragraphs (c), (e)(1) and (e)(2), (g), and (h)(1) and (h)(2) of this section set forth the Administrator's findings with respect to the 1-hour national ambient air quality standard (NAAQS) for ozone that certain new and existing sources of emissions of nitrogen oxides (''NO_X'') in certain States emit or would emit NO_X in violation of the prohibition in section 110(a)(2)(D)(i) of the Clean Air Act (CAA) on emissions in amounts that contribute significantly to nonattainment in certain States that submitted petitions in 1997–1998 addressing such NO_X emissions under section 126 of the CAA. Paragraphs (d), (e)(3) and (e)(4), (f), and (h)(3) and (h)(4) of this section set forth the Administrator's affirmative technical determinations with respect to the 8-hour NAAQS for ozone that certain new and existing sources of emissions of NO_X in certain States emit or would emit NO_X in violation of the prohibition in section 110(a)(2)(D)(i) of the CAA on emissions in amounts that contribute significantly to nonattainment in, or interfere with maintenance by, certain States that submitted petitions in 1997–1998 addressing such NO_X emissions under section 126 of the CAA. (As used in this section, the term new source includes modified sources, as well.) Paragraph (i) of this section explains the circumstances under which the findings for sources in a specific State would be withdrawn. Paragraph (j) of this section sets forth the control requirements that apply to the sources of NO_X emissions affected by the findings. Paragraph (k) of this section indefinitely stays the effectiveness of the affirmative technical determinations with respect to the 8-hour ozone standard.

(1) The States that submitted such petitions are Connecticut, Maine, Massachusetts, New Hampshire, New York, Pennsylvania, Rhode Island, and Vermont (each of which, hereinafter in this section, may be referred to also as a ''petitioning State'').

(2) The new and existing sources of NO_X emissions covered by the petitions that emit or would emit NO_X emissions in amounts that make such significant

contributions are large electric generating units (EGUs) and large non-EGUs.

(c) *Section 126(b) findings relating to impacts on ozone levels in Connecticut*—(1) *Section 126(b) findings with respect to the 1-hour ozone standard in Connecticut*. The Administrator finds that any existing or new major source or group of stationary sources emits or would emit NO_X in violation of the Clean Air Act section 110(a)(2)(d)(i) prohibition with respect to the 1-hour ozone standard in the State of Connecticut if it is or will be:

(i) In a category of large EGUs or large non-EGUs;

(ii) Located in one of the States (or portions thereof) listed in paragraph (c)(2) of this section; and

(iii) Within one of the ''Named Source Categories'' listed in the portion of Table F–1 in appendix F of this part describing the sources of NO_X emissions covered by the petition of the State of Connecticut.

(2) *States or portions of States that contain sources for which the Administrator is making section 126(b) findings with respect to the 1-hour ozone standard in Connecticut*. The States, or portions of States, that contain sources of NO_X emissions for which the Administrator is making section 126(b) findings under paragraph (c)(1) of this section are:

(i) Delaware.

(ii) District of Columbia.

(iii) Portion of Indiana located in OTAG Subregions 2 and 6, as shown in appendix F, Figure F–2, of this part.

(iv) Portion of Kentucky located in OTAG Subregion 6, as shown in appendix F, Figure F–2, of this part.

(v) Maryland.

(vi) Portion of Michigan located south of 44 degrees latitude in OTAG Subregion 2, as shown in appendix F, Figure F–2, of this part.

(vii) Portion of North Carolina located in OTAG Subregion 7, as shown in appendix F, Figure F–2, of this part.

(viii) New Jersey.

(ix) Portion of New York extending west and south of Connecticut, as shown in appendix F, Figure F–2, of this part.

(x) Ohio.

(xi) Pennsylvania.

(xii) Virginia.

(xiii) West Virginia.

(d) *Affirmative technical determinations relating to impacts on ozone levels in Maine*—(1) *Affirmative technical determinations with respect to the 8-hour ozone standard in Maine*. The Administrator of EPA finds that any existing or new major source or group of stationary sources emits or would emit NO_X in amounts that contribute significantly to nonattainment in the State of Maine, with respect to the 8-hour NAAQS for ozone if it is or will be:

(i) In a category of large EGUs or large non-EGUs;

(ii) Located in one of the States (or portions thereof) listed in paragraph (d)(2) of this section; and

(iii) Within one of the ''Named Source Categories'' listed in the portion of Table F–1 of appendix F of this part describing the sources of NO_X emissions covered by the petition of the State of Maine.

(2) *States or portions of States that contain sources for which EPA is making an affirmative technical determination with respect to the 8-hour ozone standard in Maine*. The States that contain sources for which EPA is making an affirmative technical determination are:

(i) Connecticut.

(ii) Delaware.

(iii) District of Columbia.

(iv) Maryland.

(v) Massachusetts.

(vi) New Jersey.

(vii) New York.

(viii) Pennsylvania.

(ix) Rhode Island.

(x) Virginia.

(e) *Section 126(b) findings and affirmative technical determinations relating to impacts on ozone levels in Massachusetts*—(1) *Section 126(b) findings with respect to the 1-hour ozone standard in Massachusetts*. The Administrator finds that any existing major source or group of stationary sources emits NO_X in violation of the Clean Air Act section 110(a)(2)(d)(i) prohibition with respect to the 1-hour ozone standard in the State of Massachusetts if it is:

(i) In a category of large EGUs or large non-EGUs;

(ii) Located in one of the States (or portions thereof) listed in paragraph (e)(2) of this section; and

(iii) Within one of the ''Named Source Categories'' listed in the portion of Table F–1 in appendix F of this part describing the sources of NO_X emissions covered by the petition of the State of Massachusetts.

(2) *States that contain sources for which the Administrator is making section 126(b) findings with respect to the 1-hour ozone standard in Massachusetts.* The portions of States that contain sources of NO_X emissions for which the Administrator is making section 126(b) findings under paragraph (e)(1) of this section are:

(i) All counties in West Virginia located within a 3-county-wide band of the Ohio River, as shown in appendix F, Figure F–4, of this part.

(ii) [Reserved]

(3) *Affirmative technical determinations with respect to the 8-hour ozone standard in Massachusetts.* The Administrator of EPA finds that any existing major source or group of stationary sources emits NO_X in amounts that contribute significantly to nonattainment in, or interfere with maintenance by, the State of Massachusetts, with respect to the 8-hour NAAQS for ozone if it is:

(i) In a category of large EGUs or large non-EGUs;

(ii) Located in one of the States (or portions thereof) listed in paragraph (e)(4) of this section; and

(iii) Within one of the ''Named Source Categories'' listed in the portion of Table F–1 in appendix F of this part describing the sources of NO_X emissions covered by the petition of the State of Massachusetts.

(4) *States or portions of States that contain sources for which EPA is making an affirmative technical determination with respect to the 8-hour ozone standard in Massachusetts.* The portions of States that contain sources for which EPA is making an affirmative technical determination are:

(i) All counties in Ohio located within a 3-county-wide band of the Ohio River, as shown in appendix F, Figure F–4, of this part.

(ii) All counties in West Virginia located within a 3-county-wide band of the Ohio River, as shown in appendix F, Figure F–4, of this part.

(f) *Affirmative technical determinations relating to impacts on ozone levels in New Hampshire*—(1) *Affirmative technical determinations with respect to the 8-hour ozone standard in New Hampshire.* The Administrator of EPA finds that any existing or new major source or group of stationary sources emits or would emit NO_X in amounts that contribute significantly to nonattainment in, or interfere with maintenance by, the State of New Hampshire, with respect to the 8-hour NAAQS for ozone if it is or will be:

(i) In a category of large EGUs or large non-EGUs;

(ii) Located in one of the States (or portions thereof) listed in paragraph (f)(2) of this section; and

(iii) Within one of the ''Named Source Categories'' listed in the portion of Table F–1 of appendix F of this part describing the sources of NO_X emissions covered by the petition of the State of New Hampshire.

(2) *States or portions of States that contain sources for which EPA is making an affirmative technical determination with respect to the 8-hour ozone standard in New Hampshire.* The States that contain sources for which EPA is making an affirmative technical determination are:

(i) Connecticut.

(ii) Delaware.

(iii) District of Columbia.

(iv) Maryland.

(v) Massachusetts.

(vi) New Jersey.

(vii) New York.

(viii) Pennsylvania.

(ix) Rhode Island.

(g) *Section 126(b) findings relating to impacts on ozone levels in the State of New York*—(1) *Section 126(b) findings with respect to the 1-hour ozone standard in the State of New York.* The Administrator finds that any existing or new major source or group of stationary sources emits or would emit NO_X in violation of the Clean Air Act section 110(a)(2)(d)(i) prohibition with respect to the 1-hour ozone standard in the State of New York if it is or will be:

(i) In a category of large EGUs or large non-EGUs;

(ii) Located in one of the States (or portions thereof) listed in paragraph (g)(2) of this section; and

(iii) Within one of the ''Named Source Categories'' listed in the portion of Table F–1 in appendix F of this part describing the sources of NO_X emissions covered by the petition of the State of New York.

(2) *States or portions of States that contain sources for which the Administrator is making section 126(b) findings with respect to the 1-hour ozone standard in New York.* The States, or portions of States, that contain sources of NO_X emissions for which the Administrator is making section 126(b) findings under paragraph (g)(1) of this section are:

(i) Delaware.

(ii) District of Columbia.

(iii) Portion of Indiana located in OTAG Subregions 2 and 6, as shown in appendix F, Figure F–6, of this part.

(iv) Portion of Kentucky located in OTAG Subregion 6, as shown in appendix F, Figure F–6, of this part.

(v) Maryland.

(vi) Portion of Michigan located south of 44 degrees latitude in OTAG Subregion 2, as shown in appendix F, Figure F–6, of this part.

(vii) Portion of North Carolina located in OTAG Subregions 6 and 7, as shown in appendix F, Figure F–6, of this part.

(viii) New Jersey.

(ix) Ohio.

(x) Pennsylvania.

(xi) Virginia.

(xii) West Virginia.

(h) *Section 126(b) findings and affirmative technical determinations relating to impacts on ozone levels in the State of Pennsylvania*—(1) *Section 126(b) findings with respect to the 1-hour ozone standard in the State of Pennsylvania.* The Administrator finds that any existing or new major source or group of stationary sources emits or would emit NO_X in violation of the Clean Air Act section 110(a)(2)(d)(i) prohibition with respect to the 1-hour ozone standard in the State of Pennsylvania if it is or will be:

(i) In a category of large EGUs or large non-EGUs;

(ii) Located in one of the States (or portions thereof) listed in paragraph (h)(2) of this section; and (iii) Within one of the ''Named Source Categories'' listed in the portion of Table F–1 in appendix F of this part describing the sources of NO_X emissions covered by the petition of the State of Pennsylvania.

(2) *States that contain sources for which the Administrator is making section 126(b) findings with respect to the 1-hour ozone standard in Pennsylvania.* The States that contain sources of NO_X emissions for which the Administrator is making section 126(b) findings under paragraph (h)(1) of this section are:

(i) North Carolina.

(ii) Ohio.

(iii) Virginia.

(iv) West Virginia.

(3) *Affirmative technical determinations with respect to the 8-hour ozone standard in Pennsylvania.* The Administrator of EPA finds that any existing or new major source or group of stationary sources emits or would emit NO_X in amounts that contribute significantly to nonattainment in, or interfere with maintenance by, the State of Pennsylvania, with respect to the 8-hour NAAQS for ozone:

(i) In a category of large EGUs or large non-EGUs;

(ii) Located in one of the States (or portions thereof) listed in paragraph (h)(4) of this section; and

(iii) Within one of the ''Named Source Categories'' listed in the portion of Table F–1 in appendix F of this part describing the sources of NO_X emissions covered by the petition of the State of Pennsylvania.

(4) *States or portions of States that contain sources for which EPA is making an affirmative technical determination with respect to the 8-hour ozone standard in Pennsylvania.* The States that contain sources for which EPA is making an affirmative technical determination are:

(i) Alabama.

(ii) Illinois.

(iii) Indiana.

(iv) Kentucky.

(v) Michigan.

(vi) Missouri.

(vii) North Carolina.

(viii) Ohio.

(ix) Tennessee.

(x) Virginia.

(xi) West Virginia.

(i) *Withdrawal of section 126 findings.* Notwithstanding any other provision of this subpart, a finding under paragraphs (c), (e)(1) and (e)(2), (g), and

(h)(1) and (h)(2) of this section as to a particular major source or group of stationary sources in a particular State will be deemed to be withdrawn, and the corresponding part of the relevant petition(s) denied, if the Administrator issues a final action putting in place implementation plan provisions that comply with the requirements of §§51.121 and 51.122 of this chapter for such State.

(j) *Section 126 control remedy*. The Federal NO_X Budget Trading Program in part 97 of this chapter applies to the owner or operator of any new or existing large EGU or large non-EGU as to which the Administrator makes a finding under section 126(b) of the Clean Air Act pursuant to the provisions of paragraphs (c), (e)(1) and (e)(2), (g), and (h)(1) and (h)(2) of this section.

(k) *Stay of findings with respect to the 8-hour ozone standard*. Notwithstanding any other provisions of this subpart, the effectiveness of paragraphs (d), (e)(3) and (e)(4), (f), (h)(3) and (h)(4) of this section is stayed.

(l) *Temporary stay of rules*. Notwithstanding any other provisions of this subpart, the effectiveness of this section is stayed from July 26, 1999 until February 17, 2000.

[64 FR 28318, May 25, 1999, as amended at 64 FR 33961, June 24, 1999; 65 FR 2042, Jan. 13, 2000; 65 FR 2726, Jan. 18, 2000; 69 FR 31505, June 3, 2004]

§52.35 What are the requirements of the Federal Implementation Plans (FIPs) for the Clean Air Interstate Rule (CAIR) relating to emissions of nitrogen oxides?

(a)(1) The Federal CAIR NO_X Annual Trading Program provisions of part 97 of this chapter constitute the Clean Air Interstate Rule Federal Implementation Plan provisions that relate to annual emissions of nitrogen oxides (NO_X). Each State that is described in §51.123(c)(1) and (2) of this chapter received a finding by the Administrator that the State failed to submit a State Implementation Plan (SIP) to satisfy the requirements of section 110(a)(2)(D)(i)(I) of the Clean Air Act for the $PM_{2.5}$ NAAQS. The provisions of subparts AA through II of part 97 of this chapter, regarding the CAIR NO_X Annual Trading Program, apply to the sources in each of these States that has not promulgated a SIP approved by the Administrator as correcting that deficiency. Following promulgation of an approval by the Administrator of a State's SIP as meeting the requirements of CAIR for $PM_{2.5}$ relating to NO_X under §51.123 of this chapter, these provisions of part 97 of this chapter will no longer apply to the sources in that State, except to the extent the Administrator's approval of the SIP is partial or conditional or unless such approval is under §51.123(p) of this chapter.

(2) Notwithstanding any provisions of paragraph (a)(1) of this section, if, at the time of such approval of the State's SIP, the Administrator has already allocated any CAIR NO_X allowances to sources in the State for any years, the provisions of part 97 of this chapter authorizing the Administrator to complete the allocation of CAIR NO_X allowances for those years shall continue to apply, unless the Administrator approves a SIP that provides for the allocation of the remaining CAIR NO_X allowances for those years.

(b)(1) The Federal CAIR NO_X Ozone Season Trading Program provisions of part 97 of this chapter constitute the Clean Air Interstate Rule Federal Implementation Plan provisions that relate to emissions of nitrogen oxides (NO_X) during the ozone season, as defined in §97.302 of this chapter. Each State that is described in §51.123(c)(1) and (3) of this chapter received a finding by the Administrator that the State failed to submit a State Implementation Plan (SIP) to satisfy the requirements of section 110(a)(2)(D)(i)(I) of the Clean Air Act for the 8-hour ozone NAAQS. The provisions of subparts AAAA through IIII of part 97 of this chapter, regarding the CAIR NO_X Ozone Season Trading Program, apply to sources in each of these States that has not promulgated a SIP revision approved by the Administrator as correcting that deficiency. Following promulgation of an approval by the Administrator of a State's SIP as meeting the requirements of CAIR for ozone relating to NO_X under §51.123 of this chapter, these provisions of part 97 of this chapter will no longer apply to

sources in that State, except to the extent the Administrator's approval of the SIP is partial or conditional or unless such approval is under § 51.123(ee) of this chapter.

(2) Notwithstanding any provisions of paragraph (b)(1) of this section, if, at the time of such approval of the State's SIP, the Administrator has already allocated any CAIR NO_X Ozone Season allowances to sources in the State for any years, the provisions of part 97 of this chapter authorizing the Administrator to complete the allocation of CAIR NO_X Ozone Season allowances for those years shall continue to apply, unless the Administrator approves a SIP that provides for the allocation of the remaining CAIR NO_X Ozone Season allowances for those years.

(c) The provisions of this section do not invalidate or otherwise affect the obligations of States, emissions sources, or other responsible entities with respect to all portions of plans approved or promulgated under this part or the obligations of States under the requirements of §§ 51.123 and 51.125 of this chapter.

(d)(1) The States with SIPs approved by the Administrator as meeting the requirements of CAIR for $PM_{2.5}$ relating to NO_X under § 51.123(o) of this chapter are: Indiana, and Ohio.

(2) The States with SIPs approved by the Administrator as meeting the requirements of CAIR for ozone relating to NO_X under § 51.123(aa) of this chapter, are: Indiana, and Ohio.

(e) Notwithstanding paragraphs (a) and (b) of this section, such paragraphs are not applicable as they relate to sources in the State of Minnesota as of December 3, 2009, except as provided in § 52.1240(b).

(f) Notwithstanding any provisions of paragraphs (a) through (d) of this section, subparts AA through II and AAAA through IIII of part 97 of this chapter, and any State's SIP to the contrary:

(1) With regard to any control period that begins after December 31, 2014,

(i) The provisions in paragraphs (a) through (d) of this section relating to NO_X annual or ozone season emissions shall not be applicable; and

(ii) The Administrator will not carry out any of the functions set forth for the Administrator in subparts AA through II and AAAA through IIII of part 97 of this chapter;

(2) The Administrator will not deduct for excess emissions any CAIR NO_X allowances or CAIR NO_X Ozone Season allowances allocated for 2015 or any year thereafter;

(3) By March 3, 2015, the Administrator will remove from the CAIR NO_X Allowance Tracking System accounts all CAIR NO_X allowances allocated for a control period in 2015 and any subsequent year, and, thereafter, no holding or surrender of CAIR NO_X allowances will be required with regard to emissions or excess emissions for such control periods; and

(4) By March 3, 2015, the Administrator will remove from the CAIR NO_X Ozone Season Allowance Tracking System accounts all CAIR NO_X Ozone Season allowances allocated for a control period in 2015 and any subsequent year, and, thereafter, no holding or surrender of CAIR NO_X allowances will be required with regard to emissions or excess emissions for such control periods.

[72 FR 62343, Nov. 2, 2007, as amended at 74 FR 48862, Sept. 25, 2009; 74 FR 56726, Nov. 3, 2009; 75 FR 72962, Nov. 29, 2010; 76 FR 48353, Aug. 8, 2011; 79 FR 71671, Dec. 3, 2014]

§ 52.36 What are the requirements of the Federal Implementation Plans (FIPs) for the Clean Air Interstate Rule (CAIR) relating to emissions of sulfur dioxide?

(a) The Federal CAIR SO2 Trading Program provisions of part 97 of this chapter constitute the Clean Air Interstate Rule Federal Implementation Plan provisions for emissions of sulfur dioxide (SO_2). Each State that is described in § 51.124(c) of this chapter is subject to a finding by the Administrator that the State failed to submit a State Implementation Plan (SIP) to satisfy the requirements of section 110(a)(2)(D)(i)(I) of the Clean Air Act for the $PM_{2.5}$ NAAQS. The provisions of subparts AAA through III of part 97 of this chapter, regarding the CAIR SO_2 Trading Program, apply to sources in each of these States that has not promulgated a SIP revision approved by the Administrator as correcting that deficiency. Following promulgation of

an approval by the Administrator of a State's SIP as meeting the requirements of CAIR for $PM_{2.5}$ relating to SO_2 under § 51.124 of this chapter, these provisions of part 97 of this chapter will no longer apply to sources in that State, except to the extent the Administrator's approval of the SIP is partial or conditional or unless such approval is under § 51.124(r) of this chapter.

(b) The provisions of this section do not invalidate or otherwise affect the obligations of States, emissions sources, or other responsible entities with respect to all portions of plans approved or promulgated under this part or the obligations of States under the requirements of §§ 51.124 and 51.125 of this chapter.

(c) The States with SIPs approved by the Administrator as meeting the requirements of CAIR for $PM_{2.5}$ relating to SO_2 under § 51.124(o) of this chapter are: Indiana, and Ohio

(d) Notwithstanding paragraph (a) of this section, such paragraph is not applicable as it relates to sources in the State of Minnesota as of December 3, 2009.

(e) Notwithstanding any provisions of paragraphs (a) through (c) of this section, subparts AAA through III of part 97 of this chapter and any State's SIP to the contrary:

(1) With regard to any control period that begins after December 31, 2014,

(i) The provisions of paragraphs (a) through (c) of this section relating to SO_2 emissions shall not be applicable; and

(ii) The Administrator will not carry out any of the functions set forth for the Administrator in subparts AAA through III of part 97 of this chapter; and

(2) The Administrator will not deduct for excess emissions any CAIR SO_2 allowances allocated for 2015 or any year thereafter.

[72 FR 62343, Nov. 2, 2007, as amended at 74 FR 48863, Sept. 25, 2009; 74 FR 56726, Nov. 3, 2009; 75 FR 72962, Nov. 29, 2010; 76 FR 48354, Aug. 8, 2011; 79 FR 71671, Dec. 3, 2014; 81 FR 74586, Oct. 26, 2016]

§ 52.37 [Reserved]

§ 52.38 What are the requirements of the Federal Implementation Plans (FIPs) for the Cross-State Air Pollution Rule (CSAPR) relating to emissions of nitrogen oxides?

(a) *Annual emissions.* (1) The CSAPR NO_X Annual Trading Program provisions set forth in subpart AAAAA of part 97 of this chapter constitute the CSAPR Federal Implementation Plan provisions that relate to annual emissions of nitrogen oxides (NO_X).

(2)(i) The provisions of subpart AAAAA of part 97 of this chapter apply to sources in each of the following States and Indian country located within the borders of such States with regard to emissions occurring in 2015 and each subsequent year: Alabama, Georgia, Illinois, Indiana, Iowa, Kansas, Kentucky, Maryland, Michigan, Minnesota, Missouri, Nebraska, New Jersey, New York, North Carolina, Ohio, Pennsylvania, South Carolina, Tennessee, Virginia, West Virginia, and Wisconsin.

(ii) The provisions of subpart AAAAA of part 97 of this chapter apply to sources in each of the following States and Indian country located within the borders of such States with regard to emissions occurring in 2015 and 2016 only: Texas.

(3) Notwithstanding the provisions of paragraph (a)(1) of this section, a State listed in paragraph (a)(2)(i) or (ii) of this section may adopt and include in a SIP revision, and the Administrator will approve, as CSAPR NO_X Annual allowance allocation provisions replacing the provisions in § 97.411(a) of this chapter with regard to the State and the control period in 2016, a list of CSAPR NO_X Annual units and the amount of CSAPR NO_X Annual allowances allocated to each unit on such list, provided that the list of units and allocations meets the following requirements:

(i) All of the units on the list must be units that are in the State and commenced commercial operation before January 1, 2010;

(ii) The total amount of CSAPR NO_X Annual allowance allocations on the list must not exceed the amount, under § 97.410(a) of this chapter for the State

and the control period in 2016, of the CSAPR NO_X Annual trading budget minus the sum of the new unit set-aside and Indian country new unit set-aside;

(iii) The list must be submitted electronically in a format specified by the Administrator; and

(iv) The SIP revision must not provide for any change in the units and allocations on the list after approval of the SIP revision by the Administrator and must not provide for any change in any allocation determined and recorded by the Administrator under subpart AAAAA of part 97 of this chapter;

(v) Provided that:

(A) By October 17, 2011, the State must notify the Administrator electronically in a format specified by the Administrator of the State's intent to submit to the Administrator a complete SIP revision meeting the requirements of paragraphs (a)(3)(i) through (iv) of this section by April 1, 2015; and

(B) The State must submit to the Administrator a complete SIP revision described in paragraph (a)(3)(v)(A) of this section by April 1, 2015.

(4) Notwithstanding the provisions of paragraph (a)(1) of this section, a State listed in paragraph (a)(2)(i) of this section may adopt and include in a SIP revision, and the Administrator will approve, regulations revising subpart AAAAA of part 97 of this chapter as follows and not making any other substantive revisions of that subpart:

(i) The State may adopt, as CSAPR NO_X Annual allowance allocation or auction provisions replacing the provisions in §§ 97.411(a) and (b)(1) and 97.412(a) of this chapter with regard to the State and the control period in 2017 or any subsequent year, any methodology under which the State or the permitting authority allocates or auctions CSAPR NO_X Annual allowances, and may adopt, in addition to the definitions in § 97.402 of this chapter, one or more definitions that shall apply only to terms as used in the adopted CSAPR NO_X Annual allowance allocation or auction provisions, if such methodology—

(A) Requires the State or the permitting authority to allocate and, if applicable, auction a total amount of CSAPR NO_X Annual allowances for any such control period not exceeding the amount, under §§ 97.410(a) and 97.421 of this chapter for the State and such control period, of the CSAPR NO_X Annual trading budget minus the sum of the Indian country new unit set-aside and the amount of any CSAPR NO_X Annual allowances already allocated and recorded by the Administrator.

(B) Requires, to the extent the State adopts provisions for allocations or auctions of CSAPR NO_X Annual allowances for any such control period to any CSAPR NO_X Annual units covered by § 97.411(a) of this chapter, that the State or the permitting authority submit such allocations or the results of such auctions for such control period (except allocations or results of auctions to such units of CSAPR NO_X Annual allowances remaining in a set-aside after completion of the allocations or auctions for which the set-aside was created) to the Administrator no later than the following dates:

Year of the control period for which CSAPR NO_X Annual allowances are allocated or auctioned	Deadline for submission of allocations or auction results to the Administrator
2017	June 1, 2016.
2018	June 1, 2016.
2019	June 1, 2017.
2020	June 1, 2017.
2021	June 1, 2018.
2022	June 1, 2018.
2023 and any year thereafter	June 1 of the fourth year before the year of the control period.

(C) Requires, to the extent the State adopts provisions for allocations or auctions of CSAPR NO_X Annual allowances for any such control period to any CSAPR NO_X Annual units covered by §§ 97.411(b)(1) and 97.412(a) of this chapter, that the State or the permitting authority submit such allocations or the results of such auctions (except allocations or results of auctions to such units of CSAPR NO_X Annual allowances remaining in a set-aside after completion of the allocations or auctions for which the set-aside was created) to the Administrator by July 1 of the year of such control period.

(D) Does not provide for any change, after the submission deadlines in paragraphs (a)(4)(i)(B) and (C) of this section, in the allocations submitted to the Administrator by such deadlines

and does not provide for any change in any allocation determined and recorded by the Administrator under subpart AAAAA of part 97 of this chapter;

(ii) Provided that the State must submit a complete SIP revision meeting the requirements of paragraph (a)(4)(i) of this section by December 1 of the year before the year of the deadlines for submission of allocations or auction results under paragraphs (a)(4)(i)(B) and (C) of this section applicable to the first control period for which the State wants to make allocations or hold an auction under paragraph (a)(4)(i) of this section.

(5) Notwithstanding the provisions of paragraph (a)(1) of this section, a State listed in paragraph (a)(2)(i) of this section may adopt and include in a SIP revision, and the Administrator will approve, as correcting the deficiency in the SIP that is the basis for the CSAPR Federal Implementation Plan set forth in paragraphs (a)(1), (a)(2)(i), and (a)(3) and (4) of this section with regard to sources in the State (but not sources in any Indian country within the borders of the State), regulations that are substantively identical to the provisions of the CSAPR NO_X Annual Trading Program set forth in §§ 97.402 through 97.435 of this chapter, except that the SIP revision:

(i) May adopt, as CSAPR NO_X Annual allowance allocation or auction provisions replacing the provisions in §§ 97.411(a) and (b)(1) and 97.412(a) of this chapter with regard to the State and the control period in 2017 or any subsequent year, any methodology under which the State or the permitting authority allocates or auctions CSAPR NO_X Annual allowances and that—

(A) Requires the State or the permitting authority to allocate and, if applicable, auction a total amount of CSAPR NO_X Annual allowances for any such control period not exceeding the amount, under §§ 97.410(a) and 97.421 of this chapter for the State and such control period, of the CSAPR NO_X Annual trading budget minus the sum of the Indian country new unit set-aside and the amount of any CSAPR NO_X Annual allowances already allocated and recorded by the Administrator.

(B) Requires, to the extent the State adopts provisions for allocations or auctions of CSAPR NO_X Annual allowances for any such control period to any CSAPR NO_X Annual units covered by § 97.411(a) of this chapter, that the State or the permitting authority submit such allocations or the results of such auctions for such control period (except allocations or results of auctions to such units of CSAPR NO_X Annual allowances remaining in a set-aside after completion of the allocations or auctions for which the set-aside was created) to the Administrator no later than the following dates:

Year of the control period for which CSAPR NO_X Annual allowances are allocated or auctioned	Deadline for submission of allocations or auction results to the Administrator
2017	June 1, 2016.
2018	June 1, 2016.
2019	June 1, 2017.
2020	June 1, 2017.
2021	June 1, 2018.
2022	June 1, 2018.
2023 and any year thereafter	June 1 of the fourth year before the year of the control period.

(C) Requires, to the extent the State adopts provisions for allocations or auctions of CSAPR NO_X Annual allowances for any such control period to any CSAPR NO_X Annual units covered by §§ 97.411(b)(1) and 97.412(a) of this chapter, that the State or the permitting authority submit such allocations or the results of such auctions (except allocations or results of auctions to such units of CSAPR NO_X Annual allowances remaining in a set-aside after completion of the allocations or auctions for which the set-aside was created) to the Administrator by July 1 of the year of such control period.

(D) Does not provide for any change, after the submission deadlines in paragraphs (a)(5)(i)(B) and (C) of this section, in the allocations submitted to the Administrator by such deadlines and does not provide for any change in any allocation determined and recorded by the Administrator under subpart AAAAA of part 97 of this chapter;

(ii) May adopt, in addition to the definitions in § 97.402 of this chapter, one or more definitions that shall apply only to terms as used in the

CSAPR NO_X Annual allowance allocation or auction provisions adopted under paragraph (a)(5)(i) of this section;

(iii) May substitute the name of the State for the term ''State'' as used in subpart AAAAA of part 97 of this chapter, to the extent the Administrator determines that such substitutions do not make substantive changes in the provisions in §§ 97.402 through 97.435 of this chapter; and

(iv) Must not include any of the requirements imposed on any unit in Indian country within the borders of the State in the provisions in §§ 97.402 through 97.435 of this chapter and must not include the provisions in §§ 97.411(b)(2) and (c)(5)(iii), 97.412(b), and 97.421(h) and (j) of this chapter, all of which provisions will continue to apply under any portion of the CSAPR Federal Implementation Plan that is not replaced by the SIP revision;

(v) Provided that, if and when any covered unit is located in Indian country within the borders of the State, the Administrator may modify his or her approval of the SIP revision to exclude the provisions in §§ 97.402 (definitions of ''common designated representative'', ''common designated representative's assurance level'', and ''common designated representative's share''), 97.406(c)(2), and 97.425 of this chapter and the portions of other provisions of subpart AAAAA of part 97 of this chapter referencing these sections and may modify any portion of the CSAPR Federal Implementation Plan that is not replaced by the SIP revision to include these provisions;

(vi) Provided that the State must submit a complete SIP revision meeting the requirements of paragraphs (a)(5)(i) through (iv) of this section by December 1 of the year before the year of the deadlines for submission of allocations or auction results under paragraphs (a)(5)(i)(B) and (C) of this section applicable to the first control period for which the State wants to make allocations or hold an auction under paragraph (a)(5)(i) of this section.

(6) Following promulgation of an approval by the Administrator of a State's SIP revision as correcting the SIP's deficiency that is the basis for the CSAPR Federal Implementation Plan set forth in paragraphs (a)(1), (a)(2)(i), and (a)(3) and (4) of this section for sources in the State, the provisions of paragraph (a)(2)(i) of this section will no longer apply to sources in the State, unless the Administrator's approval of the SIP revision is partial or conditional, and will continue to apply to sources in any Indian country within the borders of the State, provided that if the CSAPR Federal Implementation Plan was promulgated as a partial rather than full remedy for an obligation of the State to address interstate air pollution, the SIP revision likewise will constitute a partial rather than full remedy for the State's obligation unless provided otherwise in the Administrator's approval of the SIP revision.

(7) Notwithstanding the provisions of paragraph (a)(6) of this section, if, at the time of such approval of the State's SIP revision, the Administrator has already started recording any allocations of CSAPR NO_X Annual allowances under subpart AAAAA of part 97 of this chapter to units in the State for a control period in any year, the provisions of subpart AAAAA of part 97 of this chapter authorizing the Administrator to complete the allocation and recordation of CSAPR NO_X Annual allowances to units in the State for each such control period shall continue to apply, unless provided otherwise by such approval of the State's SIP revision.

(8) The following States have SIP revisions approved by the Administrator under paragraph (a)(3), (4), or (5) of this section:

(i) For each of the following States, the Administrator has approved a SIP revision under paragraph (a)(3) of this section as replacing the CSAPR NO_X Annual allowance allocation provisions in § 97.411(a) of this chapter with regard to the State and the control period in 2016: Alabama, Kansas, Missouri, and Nebraska.

(ii) For each of the following States, the Administrator has approved a SIP revision under paragraph (a)(4) of this section as replacing the CSAPR NO_X Annual allowance allocation provisions in §§ 97.411(a) and (b)(1) and 97.412(a) of this chapter with regard to the State and the control period in 2017 or any

subsequent year: Kansas, Missouri, and New York.

(iii) For each of the following States, the Administrator has approved a SIP revision under paragraph (a)(5) of this section as correcting the SIP's deficiency that is the basis for the CSAPR Federal Implementation Plan set forth in paragraphs (a)(1), (a)(2)(i), and (a)(3) and (4) of this section with regard to sources in the State (but not sources in any Indian country within the borders of the State): Alabama, Georgia, and South Carolina.

(b) *Ozone season emissions.* (1) The CSAPR NO_X Ozone Season Group 1 Trading Program provisions and the CSAPR NO_X Ozone Season Group 2 Trading Program provisions set forth respectively in subparts BBBBB and EEEEE of part 97 of this chapter constitute the CSAPR Federal Implementation Plan provisions that relate to emissions of NO_X during the ozone season, defined as May 1 through September 30 of a calendar year.

(2)(i) The provisions of subpart BBBBB of part 97 of this chapter apply to sources in each of the following States and Indian country located within the borders of such States with regard to emissions occurring in 2015 and each subsequent year: Georgia.

(ii) The provisions of subpart BBBBB of part 97 of this chapter apply to sources in each of the following States and Indian country located within the borders of such States with regard to emissions occurring in 2015 and 2016 only: Alabama, Arkansas, Florida, Illinois, Indiana, Iowa, Kentucky, Louisiana, Maryland, Michigan, Mississippi, Missouri, New Jersey, New York, North Carolina, Ohio, Oklahoma, Pennsylvania, South Carolina, Tennessee, Texas, Virginia, West Virginia, and Wisconsin.

(iii) The provisions of subpart EEEEE of part 97 of this chapter apply to sources in each of the following States and Indian country located within the borders of such States with regard to emissions occurring in 2017 and each subsequent year: Alabama, Arkansas, Illinois, Indiana, Iowa, Kansas, Kentucky, Louisiana, Maryland, Michigan, Mississippi, Missouri, New Jersey, New York, Ohio, Oklahoma, Pennsylvania, Tennessee, Texas, Virginia, West Virginia, and Wisconsin.

(3) Notwithstanding the provisions of paragraph (b)(1) of this section, a State listed in paragraph (b)(2)(i) or (ii) of this section may adopt and include in a SIP revision, and the Administrator will approve, as CSAPR NO_X Ozone Season Group 1 allowance allocation provisions replacing the provisions in §97.511(a) of this chapter with regard to the State and the control period in 2016, a list of CSAPR NO_X Ozone Season Group 1 units and the amount of CSAPR NO_X Ozone Season Group 1 allowances allocated to each unit on such list, provided that the list of units and allocations meets the following requirements:

(i) All of the units on the list must be units that are in the State and commenced commercial operation before January 1, 2010;

(ii) The total amount of CSAPR NO_X Ozone Season Group 1 allowance allocations on the list must not exceed the amount, under §97.510(a) of this chapter for the State and the control period in 2016, of the CSAPR NO_X Ozone Season Group 1 trading budget minus the sum of the new unit set-aside and Indian country new unit set-aside;

(iii) The list must be submitted electronically in a format specified by the Administrator; and

(iv) The SIP revision must not provide for any change in the units and allocations on the list after approval of the SIP revision by the Administrator and must not provide for any change in any allocation determined and recorded by the Administrator under subpart BBBBB of part 97 of this chapter;

(v) Provided that:

(A) By October 17, 2011 or, for Iowa, Michigan, Missouri, Oklahoma, and Wisconsin, March 6, 2015, the State must notify the Administrator electronically in a format specified by the Administrator of the State's intent to submit to the Administrator a complete SIP revision meeting the requirements of paragraphs (b)(3)(i) through (iv) of this section by April 1, 2015 or, for Iowa, Michigan, Missouri, Oklahoma, and Wisconsin, October 1, 2015; and

(B) The State must submit to the Administrator a complete SIP revision

described in paragraph (b)(3)(v)(A) of this section by April 1, 2015 or, for Iowa, Michigan, Missouri, Oklahoma, and Wisconsin, October 1, 2015.

(4) Notwithstanding the provisions of paragraph (b)(1) of this section, a State listed in paragraph (b)(2)(i) of this section may adopt and include in a SIP revision, and the Administrator will approve, regulations revising subpart BBBBB of part 97 of this chapter as follows and not making any other substantive revisions of that subpart:

(i) The State may adopt, as applicability provisions replacing the provisions in § 97.504(a)(1) and (2) of this chapter with regard to the State, provisions substantively identical to those provisions, except that the words ''more than 25 MWe'' are replaced, wherever such words appear, by words specifying a uniform lower limit on the amount of megawatts that is not greater than the amount specified by the words ''more than 25 MWe'' and is not less than the amount specified by the words ''15 MWe or more''; and

(ii) The State may adopt, as CSAPR NO_X Ozone Season Group 1 allowance allocation or auction provisions replacing the provisions in §§ 97.511(a) and (b)(1) and 97.512(a) of this chapter with regard to the State and the control period in 2017 or any subsequent year, any methodology under which the State or the permitting authority allocates or auctions CSAPR NO_X Ozone Season Group 1 allowances, and may adopt, in addition to the definitions in § 97.502 of this chapter, one or more definitions that shall apply only to terms as used in the adopted CSAPR NO_X Ozone Season Group 1 allowance allocation or auction provisions, if such methodology—

(A) Requires the State or the permitting authority to allocate and, if applicable, auction a total amount of CSAPR NO_X Ozone Season Group 1 allowances for any such control period not exceeding the amount, under §§ 97.510(a) and 97.521 of this chapter for the State and such control period, of the CSAPR NO_X Ozone Season Group 1 trading budget minus the sum of the Indian country new unit set-aside and the amount of any CSAPR NO_X Ozone Season Group 1 allowances already allocated and recorded by the Administrator.

(B) Requires, to the extent the State adopts provisions for allocations or auctions of CSAPR NO_X Ozone Season Group 1 allowances for any such control period to any CSAPR NO_X Ozone Season Group 1 units covered by § 97.511(a) of this chapter, that the State or the permitting authority submit such allocations or the results of such auctions for such control period (except allocations or results of auctions to such units of CSAPR NO_X Ozone Season Group 1 allowances remaining in a set-aside after completion of the allocations or auctions for which the set-aside was created) to the Administrator no later than the following dates:

Year of the control period for which CSAPR NO_X Ozone Season Group 1 allowances are allocated or auctioned	Deadline for submission of allocations or auction results to the Administrator
2017	June 1, 2016.
2018	June 1, 2016.
2019	June 1, 2017.
2020	June 1, 2017.
2021	June 1, 2018.
2022	June 1, 2018.
2023 and any year thereafter	June 1 of the fourth year before the year of the control period.

(C) Requires, to the extent the State adopts provisions for allocations or auctions of CSAPR NO_X Ozone Season Group 1 allowances for any such control period to any CSAPR NO_X Ozone Season Group 1 units covered by §§ 97.511(b)(1) and 97.512(a) of this chapter, that the State or the permitting authority submit such allocations or the results of such auctions (except allocations or results of auctions to such units of CSAPR NO_X Ozone Season Group 1 allowances remaining in a set-aside after completion of the allocations or auctions for which the set-aside was created) to the Administrator by July 1 of the year of such control period.

(D) Does not provide for any change, after the submission deadlines in paragraphs (b)(4)(ii)(B) and (C) of this section, in the allocations submitted to the Administrator by such deadlines and does not provide for any change in any allocation determined and recorded by the Administrator under subpart BBBBB of part 97 of this chapter;

(iii) Provided that the State must submit a complete SIP revision meeting the requirements of paragraph (b)(4)(i) or (ii) of this section by December 1 of the year before the year of the deadlines for submission of allocations or auction results under paragraphs (b)(4)(ii)(B) and (C) of this section applicable to the first control period for which the State wants to replace the applicability provisions, make allocations, or hold an auction under paragraph (b)(4)(i) or (ii) of this section.

(5) Notwithstanding the provisions of paragraph (b)(1) of this section, a State listed in paragraph (b)(2)(i) of this section may adopt and include in a SIP revision, and the Administrator will approve, as correcting the deficiency in the SIP that is the basis for the CSAPR Federal Implementation Plan set forth in paragraphs (b)(1), (b)(2)(i), and (b)(3) and (4) of this section with regard to sources in the State (but not sources in any Indian country within the borders of the State), regulations that are substantively identical to the provisions of the CSAPR NO_X Ozone Season Group 1 Trading Program set forth in §§ 97.502 through 97.535 of this chapter, except that the SIP revision:

(i) May adopt, as applicability provisions replacing the provisions in § 97.504(a)(1) and (2) of this chapter with regard to the State, provisions substantively identical to those provisions, except that the words ''more than 25 MWe'' are replaced, wherever such words appear, by words specifying a uniform lower limit on the amount of megawatts that is not greater than the amount specified by the words ''more than 25 MWe'' and is not less than the amount specified by the words ''15 MWe or more''; and

(ii) May adopt, as CSAPR NO_X Ozone Season Group 1 allowance allocation provisions replacing the provisions in §§ 97.511(a) and (b)(1) and 97.512(a) of this chapter with regard to the State and the control period in 2017 or any subsequent year, any methodology under which the State or the permitting authority allocates or auctions CSAPR NO_X Ozone Season Group 1 allowances and that—

(A) Requires the State or the permitting authority to allocate and, if applicable, auction a total amount of CSAPR NO_X Ozone Season Group 1 allowances for any such control period not exceeding the amount, under §§ 97.510(a) and 97.521 of this chapter for the State and such control period, of the CSAPR NO_X Ozone Season Group 1 trading budget minus the sum of the Indian country new unit set-aside and the amount of any CSAPR NO_X Ozone Season Group 1 allowances already allocated and recorded by the Administrator.

(B) Requires, to the extent the State adopts provisions for allocations or auctions of CSAPR NO_X Ozone Season Group 1 allowances for any such control period to any CSAPR NO_X Ozone Season Group 1 units covered by § 97.511(a) of this chapter, that the State or the permitting authority submit such allocations or the results of such auctions for such control period (except allocations or results of auctions to such units of CSAPR NO_X Ozone Season Group 1 allowances remaining in a set-aside after completion of the allocations or auctions for which the set-aside was created) to the Administrator no later than the following dates:

Year of the control period for which CSAPR NO_X Ozone Season Group 1 allowances are allocated or auctioned	Deadline for submission of allocations or auction results to the Administrator
2017	June 1, 2016.
2018	June 1, 2016.
2019	June 1, 2017.
2020	June 1, 2017.
2021	June 1, 2018.
2022	June 1, 2018.
2023 and any year thereafter	June 1 of the fourth year before the year of the control period.

(C) Requires, to the extent the State adopts provisions for allocations or auctions of CSAPR NO_X Ozone Season Group 1 allowances for any such control period to any CSAPR NO_X Ozone Season Group 1 units covered by §§ 97.511(b)(1) and 97.512(a) of this chapter, that the State or the permitting authority submit such allocations or the results of such auctions (except allocations or results of auctions to such units of CSAPR NO_X Ozone Season Group 1 allowances remaining in a set-aside after completion of the allocations or auctions for which the set-

aside was created) to the Administrator by July 1 of the year of such control period.

(D) Does not provide for any change, after the submission deadlines in paragraphs (b)(5)(ii)(B) and (C) of this section, in the allocations submitted to the Administrator by such deadlines and does not provide for any change in any allocation determined and recorded by the Administrator under subpart BBBBB of part 97 of this chapter;

(iii) May adopt, in addition to the definitions in § 97.502 of this chapter, one or more definitions that shall apply only to terms as used in the CSAPR NO_X Ozone Season Group 1 allowance allocation or auction provisions adopted under paragraph (b)(5)(ii) of this section;

(iv) May substitute the name of the State for the term ''State'' as used in subpart BBBBB of part 97 of this chapter, to the extent the Administrator determines that such substitutions do not make substantive changes in the provisions in §§ 97.502 through 97.535 of this chapter; and

(v) Must not include any of the requirements imposed on any unit in Indian country within the borders of the State in the provisions in §§ 97.502 through 97.535 of this chapter and must not include the provisions in §§ 97.511(b)(2) and (c)(5)(iii), 97.512(b), and 97.521(h) and (j) of this chapter, all of which provisions will continue to apply under any portion of the CSAPR Federal Implementation Plan that is not replaced by the SIP revision;

(vi) Provided that, if and when any covered unit is located in Indian country within the borders of the State, the Administrator may modify his or her approval of the SIP revision to exclude the provisions in §§ 97.502 (definitions of ''common designated representative'', ''common designated representative's assurance level'', and ''common designated representative's share''), 97.506(c)(2), and 97.525 of this chapter and the portions of other provisions of subpart BBBBB of part 97 of this chapter referencing these sections and may modify any portion of the CSAPR Federal Implementation Plan that is not replaced by the SIP revision to include these provisions;

(vii) Provided that the State must submit a complete SIP revision meeting the requirements of paragraphs (b)(5)(i) through (v) of this section by December 1 of the year before the year of the deadlines for submission of allocations or auction results under paragraphs (b)(5)(ii)(B) and (C) of this section applicable to the first control period for which the State wants to replace the applicability provisions, make allocations, or hold an auction under paragraph (b)(5)(i) or (ii) of this section.

(6) Notwithstanding the provisions of paragraph (b)(1) of this section, a State listed in paragraph (b)(2)(i) of this section may adopt and include in a SIP revision, and the Administrator will approve, as correcting the deficiency in the SIP that is the basis for the CSAPR Federal Implementation Plan set forth in paragraphs (b)(1), (b)(2)(i), and (b)(3) and (4) of this section with regard to sources in the State (but not sources in any Indian country within the borders of the State), regulations that are substantively identical to the provisions of the CSAPR NO_X Ozone Season Group 2 Trading Program set forth in §§ 97.802 through 97.835 of this chapter, subject to the following requirements and exceptions:

(i) The provisions of paragraphs (b)(9)(i) through (viii) of this section apply to any such SIP revision.

(ii) Following promulgation of an approval by the Administrator of such a SIP revision:

(A) The provisions of the SIP revision will apply to sources in the State with regard to emissions occurring in the control period that begins May 1 immediately after promulgation of such approval, or such later control period as may be adopted by the State in its regulations and approved by the Administrator in the SIP revision, and in each subsequent control period.

(B) Notwithstanding the provisions of paragraph (b)(6)(ii)(A) of this section, if, at the time of the approval of the SIP revision, the Administrator has already started recording any allocations of CSAPR NO_X Ozone Season Group 1 allowances to units in the State for a control period in any year, the Administrator will not record allocations of

CSAPR NO_X Ozone Season Group 2 allowances to units in the State for any such control period under the provisions of the SIP revision but instead will allocate and record CSAPR NO_X Ozone Season Group 2 allowances in place of CSAPR NO_X Ozone Season Group 1 allowances under §97.526(c)(2) of this chapter, unless provided otherwise by such approval of the SIP revision.

(7) Notwithstanding the provisions of paragraph (b)(1) of this section, a State listed in paragraph (b)(2)(iii) of this section may adopt and include in a SIP revision, and the Administrator will approve, as CSAPR NO_X Ozone Season Group 2 allowance allocation provisions replacing the provisions in §97.811(a) of this chapter with regard to the State and the control period in 2018, a list of CSAPR NO_X Ozone Season Group 2 units and the amount of CSAPR NO_X Ozone Season Group 2 allowances allocated to each unit on such list, provided that the list of units and allocations meets the following requirements:

(i) All of the units on the list must be units that are in the State and commenced commercial operation before January 1, 2015;

(ii) The total amount of CSAPR NO_X Ozone Season Group 2 allowance allocations on the list must not exceed the amount, under §97.810(a) of this chapter for the State and the control period in 2018, of the CSAPR NO_X Ozone Season Group 2 trading budget minus the sum of the new unit set-aside and Indian country new unit set-aside;

(iii) The list must be submitted electronically in a format specified by the Administrator; and

(iv) The SIP revision must not provide for any change in the units and allocations on the list after approval of the SIP revision by the Administrator and must not provide for any change in any allocation determined and recorded by the Administrator under subpart EEEEE of part 97 of this chapter;

(v) Provided that:

(A) By December 27, 2016, the State must notify the Administrator electronically in a format specified by the Administrator of the State's intent to submit to the Administrator a complete SIP revision meeting the requirements of paragraphs (b)(7)(i) through (iv) of this section by April 1, 2017; and

(B) The State must submit to the Administrator a complete SIP revision described in paragraph (b)(7)(v)(A) of this section by April 1, 2017.

(8) Notwithstanding the provisions of paragraph (b)(1) of this section, a State listed in paragraph (b)(2)(iii) of this section may adopt and include in a SIP revision, and the Administrator will approve, regulations revising subpart EEEEE of part 97 of this chapter as follows and not making any other substantive revisions of that subpart:

(i) The State may adopt, as applicability provisions replacing the provisions in §97.804(a)(1) and (2) of this chapter with regard to the State, provisions substantively identical to those provisions, except that the words ''more than 25 MWe'' are replaced, wherever such words appear, by words specifying a uniform lower limit on the amount of megawatts that is not greater than the amount specified by the words ''more than 25 MWe'' and is not less than the amount specified by the words ''15 MWe or more'';

(ii) Such a State listed in §51.121(c) of this chapter may adopt, as applicability provisions replacing the provisions in §97.804(a) and (b) of this chapter with regard to the State, provisions substantively identical to those provisions, except that applicability is expanded to include, in addition to all units in the State that would be CSAPR NO_X Ozone Season Group 2 units under §97.804(a) and (b) of this chapter and any units to which the State elects to expand applicability pursuant to paragraph (b)(8)(i) of this section, all other units that would have been subject to the State's emissions trading program regulations approved as a SIP revision under §51.121(p) of this chapter except units to which the State is authorized to expand applicability under paragraph (b)(8)(i) of this section; and

(iii) The State may adopt, as CSAPR NO_X Ozone Season Group 2 allowance allocation or auction provisions replacing the provisions in §§97.811(a) and (b)(1) and 97.812(a) of this chapter with regard to the State and the control period in 2019 or any subsequent year, any methodology under which the

State or the permitting authority allocates or auctions CSAPR NO_X Ozone Season Group 2 allowances and may adopt, in addition to the definitions in § 97.802 of this chapter, one or more definitions that shall apply only to terms as used in the adopted CSAPR NO_X Ozone Season Group 2 allowance allocation or auction provisions, if such methodology—

(A) Requires the State or the permitting authority to allocate and, if applicable, auction a total amount of CSAPR NO_X Ozone Season Group 2 allowances for any such control period not exceeding the amount, under §§ 97.810(a) and 97.821 of this chapter for the State and such control period, of the CSAPR NO_X Ozone Season Group 2 trading budget minus the sum of the Indian country new unit set-aside and the amount of any CSAPR NO_X Ozone Season Group 2 allowances already allocated and recorded by the Administrator, plus, if the State adopts regulations expanding applicability to additional units pursuant to paragraph (b)(8)(ii) of this section, an additional amount of CSAPR NO_X Ozone Season Group 2 allowances not exceeding the lesser of:

(*1*) The highest of the sum, for all additional units in the State to which applicability is expanded pursuant to paragraph (b)(8)(ii) of this section, of the NO_X emissions reported in accordance with part 75 of this chapter for the ozone season in the year before the year of the submission deadline for the SIP revision under paragraph (b)(8)(iv) of this section and the corresponding sums of the NO_X emissions reported in accordance with part 75 of this chapter for each of the two immediately preceding ozone seasons, provided that each such seasonal sum shall exclude the amount of any NO_X emissions reported by any unit for all hours in any calendar day during which the unit did not have at least one quality-assured monitor operating hour, as defined in § 72.2 of this chapter; or

(*2*) The portion of the emissions budget under the State's emissions trading program regulations approved as a SIP revision under § 51.121(p) of this chapter that is attributable to the units to which applicability is expanded pursuant to paragraph (b)(8)(ii) of this section.

(B) Requires, to the extent the State adopts provisions for allocations or auctions of CSAPR NO_X Ozone Season Group 2 allowances for any such control period to any CSAPR NO_X Ozone Season Group 2 units covered by § 97.811(a) of this chapter, that the State or the permitting authority submit such allocations or the results of such auctions for such control period (except allocations or results of auctions to such units of CSAPR NO_X Ozone Season Group 2 allowances remaining in a set-aside after completion of the allocations or auctions for which the set-aside was created) to the Administrator no later than the following dates:

Year of the control period for which CSAPR NO_X Ozone Season Group 2 allowances are allocated or auctioned	Deadline for submission of allocations or auction results to the Administrator
2019	June 1, 2018.
2020	June 1, 2018.
2021	June 1, 2019.
2022	June 1, 2019.
2023	June 1, 2020.
2024	June 1, 2020.
2025 and any year thereafter	June 1 of the fourth year before the year of the control period.

(C) Requires, to the extent the State adopts provisions for allocations or auctions of CSAPR NO_X Ozone Season Group 2 allowances for any such control period to any CSAPR NO_X Ozone Season Group 2 units covered by §§ 97.811(b)(1) and 97.812(a) of this chapter, that the State or the permitting authority submit such allocations or the results of such auctions (except allocations or results of auctions to such units of CSAPR NO_X Ozone Season Group 2 allowances remaining in a set-aside after completion of the allocations or auctions for which the set-aside was created) to the Administrator by July 1 of the year of such control period.

(D) Does not provide for any change, after the submission deadlines in paragraphs (b)(8)(iii)(B) and (C) of this section, in the allocations submitted to the Administrator by such deadlines and does not provide for any change in

any allocation determined and recorded by the Administrator under subpart EEEEE of part 97 of this chapter or § 97.526(c) of this chapter;

(iv) Provided that the State must submit a complete SIP revision meeting the requirements of paragraph (b)(8)(i), (ii), or (iii) of this section by December 1 of the year before the year of the deadlines for submission of allocations or auction results under paragraphs (b)(8)(iii)(B) and (C) of this section applicable to the first control period for which the State wants to replace the applicability provisions, make allocations, or hold an auction under paragraph (b)(8)(i), (ii), or (iii) of this section.

(9) Notwithstanding the provisions of paragraph (b)(1) of this section, a State listed in paragraph (b)(2)(iii) of this section may adopt and include in a SIP revision, and the Administrator will approve, as correcting the deficiency in the SIP that is the basis for the CSAPR Federal Implementation Plan set forth in paragraphs (b)(1), (b)(2)(iii), and (b)(7) and (8) of this section with regard to sources in the State (but not sources in any Indian country within the borders of the State), regulations that are substantively identical to the provisions of the CSAPR NO_X Ozone Season Group 2 Trading Program set forth in §§ 97.802 through 97.835 of this chapter, except that the SIP revision:

(i) May adopt, as applicability provisions replacing the provisions in § 97.804(a)(1) and (2) of this chapter with regard to the State, provisions substantively identical to those provisions, except that the words ''more than 25 MWe'' are replaced, wherever such words appear, by words specifying a uniform lower limit on the amount of megawatts that is not greater than the amount specified by the words ''more than 25 MWe'' and is not less than the amount specified by the words ''15 MWe or more'';

(ii) In the case of such a State listed in § 51.121(c) of this chapter, may adopt, as applicability provisions replacing the provisions in § 97.804(a) and (b) of this chapter with regard to the State, provisions substantively identical to those provisions, except that applicability is expanded to include, in addition to all units in the State that would be CSAPR NO_X Ozone Season Group 2 units under § 97.804(a) and (b) of this chapter and any units to which the State elects to expand applicability pursuant to paragraph (b)(9)(i) of this section, all other units that would have been subject to the State's emissions trading program regulations approved as a SIP revision under § 51.121(p) of this chapter except units to which the State is authorized to expand applicability under paragraph (b)(9)(i) of this section; and

(iii) May adopt, as CSAPR NO_X Ozone Season Group 2 allowance allocation provisions replacing the provisions in §§ 97.811(a) and (b)(1) and 97.812(a) of this chapter with regard to the State and the control period in 2019 or any subsequent year, any methodology under which the State or the permitting authority allocates or auctions CSAPR NO_X Ozone Season Group 2 allowances and that—

(A) Requires the State or the permitting authority to allocate and, if applicable, auction a total amount of CSAPR NO_X Ozone Season Group 2 allowances for any such control period not exceeding the amount, under §§ 97.810(a) and 97.821 of this chapter for the State and such control period, of the CSAPR NO_X Ozone Season Group 2 trading budget minus the sum of the Indian country new unit set-aside and the amount of any CSAPR NO_X Ozone Season Group 2 allowances already allocated and recorded by the Administrator, plus, if the State adopts regulations expanding applicability to additional units pursuant to paragraph (b)(9)(ii) of this section, an additional amount of CSAPR NO_X Ozone Season Group 2 allowances not exceeding the lesser of:

(*1*) The highest of the sum, for all additional units in the State to which applicability is expanded pursuant to paragraph (b)(9)(ii) of this section, of the NO_X emissions reported in accordance with part 75 of this chapter for the ozone season in the year before the year of the submission deadline for the SIP revision under paragraph (b)(9)(viii) of this section and the corresponding sums of the NO_X emissions reported in accordance with part 75 of

this chapter for each of the two immediately preceding ozone seasons, provided that each such seasonal sum shall exclude the amount of any NO_X emissions reported by any unit for all hours in any calendar day during which the unit did not have at least one quality-assured monitor operating hour, as defined in § 72.2 of this chapter; or

(*2*) The portion of the emissions budget under the State's emissions trading program regulations approved as a SIP revision under § 51.121(p) of this chapter that is attributable to the units to which applicability is expanded pursuant to paragraph (b)(9)(ii) of this section.

(B) Requires, to the extent the State adopts provisions for allocations or auctions of CSAPR NO_X Ozone Season Group 2 allowances for any such control period to any CSAPR NO_X Ozone Season Group 2 units covered by § 97.811(a) of this chapter, that the State or the permitting authority submit such allocations or the results of such auctions for such control period (except allocations or results of auctions to such units of CSAPR NO_X Ozone Season Group 2 allowances remaining in a set-aside after completion of the allocations or auctions for which the set-aside was created) to the Administrator no later than the following dates:

Year of the control period for which CSAPR NO_X Ozone Season Group 2 allowances are allocated or auctioned	Deadline for submission of allocations or auction results to the Administrator
2019	June 1, 2018.
2020	June 1, 2018.
2021	June 1, 2019.
2022	June 1, 2019.
2023	June 1, 2020.
2024	June 1, 2020.
2025 and any year thereafter	June 1 of the fourth year before the year of the control period.

(C) Requires, to the extent the State adopts provisions for allocations or auctions of CSAPR NO_X Ozone Season Group 2 allowances for any such control period to any CSAPR NO_X Ozone Season Group 2 units covered by §§ 97.811(b)(1) and 97.812(a) of this chapter, that the State or the permitting authority submit such allocations or the results of such auctions (except allocations or results of auctions to such units of CSAPR NO_X Ozone Season Group 2 allowances remaining in a set-aside after completion of the allocations or auctions for which the set-aside was created) to the Administrator by July 1 of the year of such control period.

(D) Does not provide for any change, after the submission deadlines in paragraphs (b)(9)(iii)(B) and (C) of this section, in the allocations submitted to the Administrator by such deadlines and does not provide for any change in any allocation determined and recorded by the Administrator under subpart EEEEE of part 97 of this chapter or § 97.526(c) of this chapter;

(iv) May adopt, in addition to the definitions in § 97.802 of this chapter, one or more definitions that shall apply only to terms as used in the CSAPR NO_X Ozone Season Group 2 allowance allocation or auction provisions adopted under paragraph (b)(9)(iii) of this section;

(v) May substitute the name of the State for the term ''State'' as used in subpart EEEEE of part 97 of this chapter, to the extent the Administrator determines that such substitutions do not make substantive changes in the provisions in §§ 97.802 through 97.835 of this chapter; and

(vi) Must not include any of the requirements imposed on any unit in Indian country within the borders of the State in the provisions in §§ 97.802 through 97.835 of this chapter and must not include the provisions in §§ 97.811(b)(2) and (c)(5)(iii), 97.812(b), and 97.821(h) and (j) of this chapter, all of which provisions will continue to apply under any portion of the CSAPR Federal Implementation Plan that is not replaced by the SIP revision;

(vii) Provided that, if and when any covered unit is located in Indian country within the borders of the State, the Administrator may modify his or her approval of the SIP revision to exclude the provisions in §§ 97.802 (definitions of ''base CSAPR NO_X Ozone Season Group 2 source'', ''base CSAPR NO_X Ozone Season Group 2 unit'', ''common designated representative'', ''common designated representative's assurance level'', and ''common designated representative's share''), 97.806(c)(2), and 97.825 of this chapter and the portions of other provisions of subpart EEEEE

of part 97 of this chapter referencing these sections and may modify any portion of the CSAPR Federal Implementation Plan that is not replaced by the SIP revision to include these provisions;

(viii) Provided that the State must submit a complete SIP revision meeting the requirements of paragraphs (b)(9)(i) through (vi) of this section by December 1 of the year before the year of the deadlines for submission of allocations or auction results under paragraphs (b)(9)(iii)(B) and (C) of this section applicable to the first control period for which the State wants to replace the applicability provisions, make allocations, or hold an auction under paragraph (b)(9)(i), (ii), or (iii) of this section.

(10) Following promulgation of an approval by the Administrator of a State's SIP revision as correcting the SIP's deficiency that is the basis for the CSAPR Federal Implementation Plan set forth in paragraphs (b)(1), (b)(2)(i), and (b)(3) and (4) of this section or paragraphs (b)(1), (b)(2)(iii), and (b)(7) and (8) of this section for sources in the State—

(i) The provisions of paragraph (b)(2)(i) or (iii) of this section, as applicable, will no longer apply to sources in the State, unless the Administrator's approval of the SIP revision is partial or conditional, and will continue to apply to sources in any Indian country within the borders of the State, provided that if the CSAPR Federal Implementation Plan was promulgated as a partial rather than full remedy for an obligation of the State to address interstate air pollution, the SIP revision likewise will constitute a partial rather than full remedy for the State's obligation unless provided otherwise in the Administrator's approval of the SIP revision; and

(ii) For a State listed in §51.121(c) of this chapter, the State's adoption of the regulations included in such approved SIP revision will satisfy with regard to the sources subject to such regulations, including any sources made subject to such regulations pursuant to paragraph (b)(9)(ii) of this section, the requirement under §51.121(r)(2) of this chapter for the State to revise its SIP to adopt control measures with regard to such sources.

(11) Notwithstanding the provisions of paragraph (b)(10)(i) of this section—

(i) If, at the time of such approval of the State's SIP revision, the Administrator has already started recording any allocations of CSAPR NO_X Ozone Season Group 1 allowances under subpart BBBBB of part 97 of this chapter, or allocations of CSAPR NO_X Ozone Season Group 2 allowances under subpart EEEEE of part 97 of this chapter, to units in the State for a control period in any year, the provisions of subpart BBBBB of part 97 of this chapter authorizing the Administrator to complete the allocation and recordation of CSAPR NO_X Ozone Season Group 1 allowances, or of subpart EEEEE of part 97 of this chapter authorizing the Administrator to complete the allocation and recordation of CSAPR NO_X Ozone Season Group 2 allowances, as applicable, to units in the State for each such control period shall continue to apply, unless provided otherwise by such approval of the State's SIP revision; and

(ii) The provisions of §97.526(c)(1) through (6) of this chapter authorizing the Administrator to remove CSAPR NO_X Ozone Season Group 1 allowances from any account where such allowances are held and to allocate and record amounts of CSAPR NO_X Ozone Season Group 2 allowances in place of any CSAPR NO_X Ozone Season Group 1 allowances that have been so removed or that have not been initially recorded, and the provisions of §97.526(c)(7) of this chapter authorizing the use of CSAPR NO_X Ozone Season Group 2 allowances to satisfy requirements to hold CSAPR NO_X Ozone Season Group 1 allowances, will continue to apply.

(12) The following States have SIP revisions approved by the Administrator under paragraph (b)(3), (4), or (5) of this section:

(i) For each of the following States, the Administrator has approved a SIP revision under paragraph (b)(3) of this section as replacing the CSAPR NO_X Ozone Season Group 1 allowance allocation provisions in §97.511(a) of this chapter with regard to the State and the control period in 2016: Alabama and Missouri.

(ii) For each of the following States, the Administrator has approved a SIP revision under paragraph (b)(4) of this section as replacing the CSAPR NO_X Ozone Season Group 1 applicability provisions in § 97.504(a)(1) and (2) of this chapter or the CSAPR NO_X Ozone Season Group 1 allowance allocation provisions in §§ 97.511(a) and (b)(1) and 97.512(a) of this chapter with regard to the State and the control period in 2017 or any subsequent year: [none].

(iii) For each of the following States, the Administrator has approved a SIP revision under paragraph (b)(5) of this section as correcting the SIP's deficiency that is the basis for the CSAPR Federal Implementation Plan set forth in paragraphs (b)(1), (b)(2)(i), and (b)(3) and (4) of this section with regard to sources in the State (but not sources in any Indian country within the borders of the State): Georgia.

(13) The following States have SIP revisions approved by the Administrator under paragraph (b)(6), (7), (8), or (9) of this section:

(i) For each of the following States, the Administrator has approved a SIP revision under paragraph (b)(6) of this section as correcting the SIP's deficiency that is the basis for the CSAPR Federal Implementation Plan set forth in paragraphs (b)(1), (b)(2)(i), and (b)(3) and (4) of this section with regard to sources in the State (but not sources in any Indian country within the borders of the State): [none].

(ii) For each of the following States, the Administrator has approved a SIP revision under paragraph (b)(7) of this section as replacing the CSAPR NO_X Ozone Season Group 2 allowance allocation provisions in § 97.811(a) of this chapter with regard to the State and the control period in 2018: [none].

(iii) For each of the following States, the Administrator has approved a SIP revision under paragraph (b)(8) of this section as replacing the CSAPR NO_X Ozone Season Group 2 applicability provisions in § 97.804(a) and (b) or § 97.804(a)(1) and (2) of this chapter or the CSAPR NO_X Ozone Season Group 2 allowance allocation provisions in §§ 97.811(a) and (b)(1) and 97.812(a) of this chapter with regard to the State and the control period in 2019 or any subsequent year: [none].

(iv) For each of the following States, the Administrator has approved a SIP revision under paragraph (b)(9) of this section as correcting the SIP's deficiency that is the basis for the CSAPR Federal Implementation Plan set forth in paragraphs (b)(1), (b)(2)(iii), and (b)(7) and (8) of this section with regard to sources in the State (but not sources in any Indian country within the borders of the State): Alabama.

[76 FR 48354, Aug. 8, 2011, as amended at 76 FR 80774, Dec. 27, 2011; 79 FR 71671, Dec. 3, 2014; 81 FR 74586, Oct. 26, 2016; 82 FR 45496, Sept. 29, 2017; 82 FR 46677, Oct. 6, 2017; 82 FR 47934, 47939, Oct. 13, 2017; 82 FR 57366, Dec. 5, 2017]

§ 52.39 What are the requirements of the Federal Implementation Plans (FIPs) for the Cross-State Air Pollution Rule (CSAPR) relating to emissions of sulfur dioxide?

(a) The CSAPR SO_2 Group 1 Trading Program provisions and the CSAPR SO_2 Group 2 Trading Program provisions set forth respectively in subparts CCCCC and DDDDD of part 97 of this chapter constitute the CSAPR Federal Implementation Plan provisions that relate to emissions of sulfur dioxide (SO_2).

(b) The provisions of subpart CCCCC of part 97 of this chapter apply to sources in each of the following States and Indian country located within the borders of such States with regard to emissions occurring in 2015 and each subsequent year: Illinois, Indiana, Iowa, Kentucky, Maryland, Michigan, Missouri, New Jersey, New York, North Carolina, Ohio, Pennsylvania, Tennessee, Virginia, West Virginia, and Wisconsin.

(c)(1) The provisions of subpart DDDDD of part 97 of this chapter apply to sources in each of the following States and Indian country located within the borders of such States with regard to emissions occurring in 2015 and each subsequent year: Alabama, Georgia, Kansas, Minnesota, Nebraska, and South Carolina.

(2) The provisions of subpart DDDDD of part 97 of this chapter apply to sources in each of the following States and Indian country located within the borders of such States with regard to emissions occurring in 2015 and 2016 only: Texas.

(d) Notwithstanding the provisions of paragraph (a) of this section, a State listed in paragraph (b) of this section may adopt and include in a SIP revision, and the Administrator will approve, as CSAPR SO_2 Group 1 allowance allocation provisions replacing the provisions in § 97.611(a) of this chapter with regard to the State and the control period in 2016, a list of CSAPR SO_2 Group 1 units and the amount of CSAPR SO_2 Group 1 allowances allocated to each unit on such list, provided that the list of units and allocations meets the following requirements:

(1) All of the units on the list must be units that are in the State and commenced commercial operation before January 1, 2010;

(2) The total amount of CSAPR SO_2 Group 1 allowance allocations on the list must not exceed the amount, under § 97.610(a) of this chapter for the State and the control period in 2016, of the CSAPR SO_2 Group 1 trading budget minus the sum of the new unit set-aside and Indian country new unit set-aside;

(3) The list must be submitted electronically in a format specified by the Administrator; and

(4) The SIP revision must not provide for any change in the units and allocations on the list after approval of the SIP revision by the Administrator and must not provide for any change in any allocation determined and recorded by the Administrator under subpart CCCCC of part 97 of this chapter;

(5) Provided that:

(i) By October 17, 2011, the State must notify the Administrator electronically in a format specified by the Administrator of the State's intent to submit to the Administrator a complete SIP revision meeting the requirements of paragraphs (d)(1) through (4) of this section by April 1, 2015; and

(ii) The State must submit to the Administrator a complete SIP revision described in paragraph (d)(5)(i) of this section by April 1, 2015.

(e) Notwithstanding the provisions of paragraph (a) of this section, a State listed in paragraph (b) of this section may adopt and include in a SIP revision, and the Administrator will approve, regulations revising subpart CCCCC of part 97 of this chapter as follows and not making any other substantive revisions of that subpart:

(1) The State may adopt, as CSAPR SO_2 Group 1 allowance allocation or auction provisions replacing the provisions in §§ 97.611(a) and (b)(1) and 97.612(a) of this chapter with regard to the State and the control period in 2017 or any subsequent year, any methodology under which the State or the permitting authority allocates or auctions CSAPR SO_2 Group 1 allowances and may adopt, in addition to the definitions in § 97.602 of this chapter, one or more definitions that shall apply only to terms as used in the adopted CSAPR SO_2 Group 1 allowance allocation or auction provisions, if such methodology—

(i) Requires the State or the permitting authority to allocate and, if applicable, auction a total amount of CSAPR SO_2 Group 1 allowances for any such control period not exceeding the amount, under §§ 97.610(a) and 97.621 of this chapter for the State and such control period, of the CSAPR SO_2 Group 1 trading budget minus the sum of the Indian country new unit set-aside and the amount of any CSAPR SO_2 Group 1 allowances already allocated and recorded by the Administrator.

(ii) Requires, to the extent the State adopts provisions for allocations or auctions of CSAPR SO_2 Group 1 allowances for any such control period to any CSAPR SO_2 Group 1 units covered by § 97.611(a) of this chapter, that the State or the permitting authority submit such allocations or the results of such auctions for such control period (except allocations or results of auctions to such units of CSAPR SO_2 Group 1 allowances remaining in a set-aside after completion of the allocations or auctions for which the set-aside was created) to the Administrator no later than the following dates:

Year of the control period for which CSAPR SO_2 Group 1 allowances are allocated or auctioned	Deadline for submission of allocations or auction results to the Administrator
2017	June 1, 2016.
2018	June 1, 2016.
2019	June 1, 2017.
2020	June 1, 2017.
2021	June 1, 2018.

Year of the control period for which CSAPR SO_2 Group 1 allowances are allocated or auctioned	Deadline for submission of allocations or auction results to the Administrator
2022	June 1, 2018.
2023 and any year thereafter	June 1 of the fourth year before the year of the control period.

(iii) Requires, to the extent the State adopts provisions for allocations or auctions of CSAPR SO_2 Group 1 allowances for any such control period to any CSAPR SO_2 Group 1 units covered by §§ 97.611(b)(1) and 97.612(a) of this chapter, that the State or the permitting authority submit such allocations or the results of such auctions (except allocations or results of auctions to such units of CSAPR SO_2 Group 1 allowances remaining in a set-aside after completion of the allocations or auctions for which the set-aside was created) to the Administrator by July 1 of the year of such control period.

(iv) Does not provide for any change, after the submission deadlines in paragraphs (e)(1)(ii) and (iii) of this section, in the allocations submitted to the Administrator by such deadlines and does not provide for any change in any allocation determined and recorded by the Administrator under subpart CCCCC of part 97 of this chapter;

(2) Provided that the State must submit a complete SIP revision meeting the requirements of paragraph (e)(1) of this section by December 1 of the year before the year of the deadlines for submission of allocations or auction results under paragraphs (e)(1)(ii) and (iii) of this section applicable to the first control period for which the State wants to make allocations or hold an auction under paragraph (e)(1) of this section.

(f) Notwithstanding the provisions of paragraph (a) of this section, a State listed in paragraph (b) of this section may adopt and include in a SIP revision, and the Administrator will approve, as correcting the deficiency in the SIP that is the basis for the CSAPR Federal Implementation Plan set forth in paragraphs (a), (b), (d), and (e) of this section with regard to sources in the State (but not sources in any Indian country within the borders of the State), regulations that are substantively identical to the provisions of the CSAPR SO_2 Group 1 Trading Program set forth in §§ 97.602 through 97.635 of this chapter, except that the SIP revision:

(1) May adopt, as CSAPR SO_2 Group 1 allowance allocation or auction provisions replacing the provisions in §§ 97.611(a) and (b)(1) and 97.612(a) of this chapter with regard to the State and the control period in 2017 or any subsequent year, any methodology under which the State or the permitting authority allocates or auctions CSAPR SO_2 Group 1 allowances and that—

(i) Requires the State or the permitting authority to allocate and, if applicable, auction a total amount of CSAPR SO_2 Group 1 allowances for any such control period not exceeding the amount, under §§ 97.610(a) and 97.621 of this chapter for the State and such control period, of the CSAPR SO_2 Group 1 trading budget minus the sum of the Indian country new unit set-aside and the amount of any CSAPR SO_2 Group 1 allowances already allocated and recorded by the Administrator.

(ii) Requires, to the extent the State adopts provisions for allocations or auctions of CSAPR SO_2 Group 1 allowances for any such control period to any CSAPR SO_2 Group 1 units covered by § 97.611(a) of this chapter, that the State or the permitting authority submit such allocations or the results of such auctions for such control period (except allocations or results of auctions to such units of CSAPR SO_2 Group 1 allowances remaining in a set-aside after completion of the allocations or auctions for which the set-aside was created) to the Administrator no later than the following dates:

Year of the control period for which CSAPR SO_2 Group 1 allowances are allocated or auctioned	Deadline for submission of allocations or auction results to the Administrator
2017	June 1, 2016.
2018	June 1, 2016.
2019	June 1, 2017.
2020	June 1, 2017.
2021	June 1, 2018.
2022	June 1, 2018.
2023 and any year thereafter	June 1 of the fourth year before the year of the control period.

(iii) Requires, to the extent the State adopts provisions for allocations or auctions of CSAPR SO_2 Group 1 allowances for any such control period to any CSAPR SO_2 Group 1 units covered by §§ 97.611(b)(1) and 97.612(a) of this chapter, that the State or the permitting authority submit such allocations or the results of such auctions (except allocations or results of auctions to such units of CSAPR SO_2 Group 1 allowances remaining in a set-aside after completion of the allocations or auctions for which the set-aside was created) to the Administrator by July 1 of the year of such control period.

(iv) Does not provide for any change, after the submission deadlines in paragraphs (f)(1)(ii) and (iii) of this section, in the allocations submitted to the Administrator by such deadlines and does not provide for any change in any allocation determined and recorded by the Administrator under subpart CCCCC of part 97 of this chapter;

(2) May adopt, in addition to the definitions in § 97.602 of this chapter, one or more definitions that shall apply only to terms as used in the CSAPR SO_2 Group 1 allowance allocation or auction provisions adopted under paragraph (f)(1) of this section;

(3) May substitute the name of the State for the term ''State'' as used in subpart CCCCC of part 97 of this chapter, to the extent the Administrator determines that such substitutions do not make substantive changes in the provisions in §§ 97.602 through 97.635 of this chapter; and

(4) Must not include any of the requirements imposed on any unit in Indian country within the borders of the State in the provisions in §§ 97.602 through 97.635 of this chapter and must not include the provisions in §§ 97.611(b)(2) and (c)(5)(iii), 97.612(b), and 97.621(h) and (j) of this chapter, all of which provisions will continue to apply under any portion of the CSAPR Federal Implementation Plan that is not replaced by the SIP revision;

(5) Provided that, if and when any covered unit is located in Indian country within the borders of the State, the Administrator may modify his or her approval of the SIP revision to exclude the provisions in §§ 97.602 (definitions of ''common designated representative'', ''common designated representative's assurance level'', and ''common designated representative's share''), 97.606(c)(2), and 97.625 of this chapter and the portions of other provisions of subpart CCCCC of part 97 of this chapter referencing these sections and may modify any portion of the CSAPR Federal Implementation Plan that is not replaced by the SIP revision to include these provisions;

(6) Provided that the State must submit a complete SIP revision meeting the requirements of paragraphs (f)(1) through (4) of this section by December 1 of the year before the year of the deadlines for submission of allocations or auction results under paragraphs (f)(1)(ii) and (iii) of this section applicable to the first control period for which the State wants to make allocations or hold an auction under paragraph (f)(1) of this section.

(g) Notwithstanding the provisions of paragraph (a) of this section, a State listed in paragraph (c)(1) or (2) of this section may adopt and include in a SIP revision, and the Administrator will approve, as CSAPR SO_2 Group 2 allowance allocation provisions replacing the provisions in § 97.711(a) of this chapter with regard to the State and the control period in 2016, a list of CSAPR SO_2 Group 2 units and the amount of CSAPR SO_2 Group 2 allowances allocated to each unit on such list, provided that the list of units and allocations meets the following requirements:

(1) All of the units on the list must be units that are in the State and commenced commercial operation before January 1, 2010;

(2) The total amount of CSAPR SO_2 Group 2 allowance allocations on the list must not exceed the amount, under § 97.710(a) of this chapter for the State and the control period in 2016, of the CSAPR SO_2 Group 2 trading budget minus the sum of the new unit set-aside and Indian country new unit set-aside;

(3) The list must be submitted electronically in a format specified by the Administrator; and

(4) The SIP revision must not provide for any change in the units and allocations on the list after approval of the SIP revision by the Administrator and

must not provide for any change in any allocation determined and recorded by the Administrator under subpart DDDDD of part 97 of this chapter;

(5) Provided that:

(i) By October 17, 2011, the State must notify the Administrator electronically in a format specified by the Administrator of the State's intent to submit to the Administrator a complete SIP revision meeting the requirements of paragraphs (g)(1) through (4) of this section by April 1, 2015; and

(ii) The State must submit to the Administrator a complete SIP revision described in paragraph (g)(5)(i) of this section by April 1, 2015.

(h) Notwithstanding the provisions of paragraph (a) of this section, a State listed in paragraph (c)(1) of this section may adopt and include in a SIP revision, and the Administrator will approve, regulations revising subpart DDDDD of part 97 of this chapter as follows and not making any other substantive revisions of that subpart:

(1) The State may adopt, as CSAPR SO_2 Group 2 allowance allocation or auction provisions replacing the provisions in §§ 97.711(a) and (b)(1) and 97.712(a) of this chapter with regard to the State and the control period in 2017 or any subsequent year, any methodology under which the State or the permitting authority allocates or auctions CSAPR SO_2 Group 2 allowances and may adopt, in addition to the definitions in § 97.702 of this chapter, one or more definitions that shall apply only to terms as used in the adopted CSAPR SO_2 Group 2 allowance allocation or auction provisions, if such methodology—

(i) Requires the State or the permitting authority to allocate and, if applicable, auction a total amount of CSAPR SO_2 Group 2 allowances for any such control period not exceeding the amount, under §§ 97.710(a) and 97.721 of this chapter for the State and such control period, of the CSAPR SO_2 Group 2 trading budget minus the sum of the Indian country new unit set-aside and the amount of any CSAPR SO_2 Group 2 allowances already allocated and recorded by the Administrator.

(ii) Requires, to the extent the State adopts provisions for allocations or auctions of CSAPR SO_2 Group 2 allowances for any such control period to any CSAPR SO_2 Group 2 units covered by § 97.711(a) of this chapter, that the State or the permitting authority submit such allocations or the results of such auctions for such control period (except allocations or results of auctions to such units of CSAPR SO_2 Group 2 allowances remaining in a set-aside after completion of the allocations or auctions for which the set-aside was created) to the Administrator no later than the following dates:

Year of the control period for which CSAPR SO_2 Group 2 allowances are allocated or auctioned	Deadline for submission of allocations or auction results to the Administrator
2017	June 1, 2016.
2018	June 1, 2016.
2019	June 1, 2017.
2020	June 1, 2017.
2021	June 1, 2018.
2022	June 1, 2018.
2023 and any year thereafter	June 1 of the fourth year before the year of the control period.

(iii) Requires, to the extent the State adopts provisions for allocations or auctions of CSAPR SO_2 Group 2 allowances for any such control period to any CSAPR SO_2 Group 2 units covered by §§ 97.711(b)(1) and 97.712(a) of this chapter, that the State or the permitting authority submit such allocations or the results of such auctions (except allocations or results of auctions to such units of CSAPR SO_2 Group 2 allowances remaining in a set-aside after completion of the allocations or auctions for which the set-aside was created) to the Administrator by July 1 of the year of such control period.

(iv) Does not provide for any change, after the submission deadlines in paragraphs (h)(1)(ii) and (iii) of this section, in the allocations submitted to the Administrator by such deadlines and does not provide for any change in any allocation determined and recorded by the Administrator under subpart DDDDD of part 97 of this chapter;

(2) Provided that the State must submit a complete SIP revision meeting the requirements of paragraph (h)(1) of this section by December 1 of the year before the year of the deadlines for submission of allocations or auction results under paragraphs (h)(1)(ii) and

(iii) of this section applicable to the first control period for which the State wants to make allocations or hold an auction under paragraph (h)(1) of this section.

(i) Notwithstanding the provisions of paragraph (a) of this section, a State listed in paragraph (c)(1) of this section may adopt and include in a SIP revision, and the Administrator will approve, as correcting the deficiency in the SIP that is the basis for the CSAPR Federal Implementation Plan set forth in paragraphs (a), (c)(1), (g), and (h) of this section with regard to sources in the State (but not sources in any Indian country within the borders of the State), regulations that are substantively identical to the provisions of the CSAPR SO_2 Group 2 Trading Program set forth in §§97.702 through 97.735 of this chapter, except that the SIP revision:

(1) May adopt, as CSAPR SO_2 Group 2 allowance allocation or auction provisions replacing the provisions in §§97.711(a) and (b)(1) and 97.712(a) of this chapter with regard to the State and the control period in 2017 or any subsequent year, any methodology under which the State or the permitting authority allocates or auctions CSAPR SO_2 Group 2 allowances and that—

(i) Requires the State or the permitting authority to allocate and, if applicable, auction a total amount of CSAPR SO_2 Group 2 allowances for any such control period not exceeding the amount, under §§97.710(a) and 97.721 of this chapter for the State and such control period, of the CSAPR SO_2 Group 2 trading budget minus the sum of the Indian country new unit set-aside and the amount of any CSAPR SO_2 Group 2 allowances already allocated and recorded by the Administrator.

(ii) Requires, to the extent the State adopts provisions for allocations or auctions of CSAPR SO_2 Group 2 allowances for any such control period to any CSAPR SO_2 Group 2 units covered by §97.711(a) of this chapter, that the State or the permitting authority submit such allocations or the results of such auctions for such control period (except allocations or results of auctions to such units of CSAPR SO_2 Group 2 allowances remaining in a set-aside after completion of the allocations or auctions for which the set-aside was created) to the Administrator no later than the following dates:

Year of the control period for which CSAPR SO_2 Group 2 allowances are allocated or auctioned	Deadline for submission of allocations or auction results to the Administrator
2017	June 1, 2016.
2018	June 1, 2016.
2019	June 1, 2017.
2020	June 1, 2017.
2021	June 1, 2018.
2022	June 1, 2018.
2023 and any year thereafter	June 1 of the fourth year before the year of the control period.

(iii) Requires, to the extent the State adopts provisions for allocations or auctions of CSAPR SO_2 Group 2 allowances for any such control period to any CSAPR SO_2 Group 2 units covered by §§97.711(b)(1) and 97.712(a) of this chapter, that the State or the permitting authority submit such allocations or the results of such auctions (except allocations or results of auctions to such units of CSAPR SO_2 Group 2 allowances remaining in a set-aside after completion of the allocations or auctions for which the set-aside was created) to the Administrator by July 1 of the year of such control period.

(iv) Does not provide for any change, after the submission deadlines in paragraphs (i)(1)(ii) and (iii) of this section, in the allocations submitted to the Administrator by such deadlines and does not provide for any change in any allocation determined and recorded by the Administrator under subpart DDDDD of part 97 of this chapter;

(2) May adopt, in addition to the definitions in §97.702 of this chapter, one or more definitions that shall apply only to terms as used in the CSAPR SO_2 Group 2 allowance allocation or auction provisions adopted under paragraph (i)(1) of this section;

(3) May substitute the name of the State for the term ''State'' as used in subpart DDDDD of part 97 of this chapter, to the extent the Administrator determines that such substitutions do not make substantive changes in the provisions in §§97.702 through 97.735 of this chapter; and

(4) Must not include any of the requirements imposed on any unit in Indian country within the borders of the State in the provisions in §§ 97.702 through 97.735 of this chapter and must not include the provisions in §§ 97.711(b)(2) and (c)(5)(iii), 97.712(b), and 97.721(h) and (j) of this chapter, all of which provisions will continue to apply under any portion of the CSAPR Federal Implementation Plan that is not replaced by the SIP revision;

(5) Provided that, if and when any covered unit is located in Indian country within the borders of the State, the Administrator may modify his or her approval of the SIP revision to exclude the provisions in §§ 97.702 (definitions of ''common designated representative'', ''common designated representative's assurance level'', and ''common designated representative's share''), 97.706(c)(2), and 97.725 of this chapter and the portions of other provisions of subpart DDDDD of part 97 of this chapter referencing these sections and may modify any portion of the CSAPR Federal Implementation Plan that is not replaced by the SIP revision to include these provisions;

(6) Provided that the State must submit a complete SIP revision meeting the requirements of paragraphs (i)(1) through (4) of this section by December 1 of the year before the year of the deadlines for submission of allocations or auction results under paragraphs (i)(1)(ii) and (iii) of this section applicable to the first control period for which the State wants to make allocations or hold an auction under paragraph (i)(1) of this section.

(j) Following promulgation of an approval by the Administrator of a State's SIP revision as correcting the SIP's deficiency that is the basis for the CSAPR Federal Implementation Plan set forth in paragraphs (a), (b), (d), and (e) of this section or paragraphs (a), (c)(1), (g), and (h) of this section for sources in the State, the provisions of paragraph (b) or (c)(1) of this section, as applicable, will no longer apply to sources in the State, unless the Administrator's approval of the SIP revision is partial or conditional, and will continue to apply to sources in any Indian country within the borders of the State, provided that if the CSAPR Federal Implementation Plan was promulgated as a partial rather than full remedy for an obligation of the State to address interstate air pollution, the SIP revision likewise will constitute a partial rather than full remedy for the State's obligation unless provided otherwise in the Administrator's approval of the SIP revision.

(k) Notwithstanding the provisions of paragraph (j) of this section, if, at the time of such approval of the State's SIP revision, the Administrator has already started recording any allocations of CSAPR SO_2 Group 1 allowances under subpart CCCCC of part 97 of this chapter, or allocations of CSAPR SO_2 Group 2 allowances under subpart DDDDD of part 97 of this chapter, to units in the State for a control period in any year, the provisions of subpart CCCCC of part 97 of this chapter authorizing the Administrator to complete the allocation and recordation of CSAPR SO_2 Group 1 allowances, or of subpart DDDDD of part 97 of this chapter authorizing the Administrator to complete the allocation and recordation of CSAPR SO_2 Group 2 allowances, as applicable, to units in the State for each such control period shall continue to apply, unless provided otherwise by such approval of the State's SIP revision.

(l) The following States have SIP revisions approved by the Administrator under paragraph (d), (e), or (f) of this section:

(1) For each of the following States, the Administrator has approved a SIP revision under paragraph (d) of this section as replacing the CSAPR SO_2 Group 1 allowance allocation provisions in § 97.611(a) of this chapter with regard to the State and the control period in 2016: [none].

(2) For each of the following States, the Administrator has approved a SIP revision under paragraph (e) of this section as replacing the CSAPR SO_2 Group 1 allowance allocation provisions in §§ 97.611(a) and (b)(1) and 97.612(a) of this chapter with regard to the State and the control period in 2017 or any subsequent year: Missouri and New York.

(3) For each of the following States, the Administrator has approved a SIP

revision under paragraph (f) of this section as correcting the SIP's deficiency that is the basis for the CSAPR Federal Implementation Plan set forth in paragraphs (a), (b), (d), and (e) of this section with regard to sources in the State (but not sources in any Indian country within the borders of the State): [none].

(m) The following States have SIP revisions approved by the Administrator under paragraph (g), (h), or (i) of this section:

(1) For each of the following States, the Administrator has approved a SIP revision under paragraph (g) of this section as replacing the CSAPR SO_2 Group 2 allowance allocation provisions in § 97.711(a) of this chapter with regard to the State and the control period in 2016: Alabama and Nebraska.

(2) For each of the following States, the Administrator has approved a SIP revision under paragraph (h) of this section as replacing the CSAPR SO_2 Group 2 allowance allocation provisions in §§ 97.711(a) and (b)(1) and 97.712(a) of this chapter with regard to the State and the control period in 2017 or any subsequent year: [none].

(3) For each of the following States, the Administrator has approved a SIP revision under paragraph (i) of this section as correcting the SIP's deficiency that is the basis for the CSAPR Federal Implementation Plan set forth in paragraphs (a), (c)(1), (g), and (h) of this section with regard to sources in the State (but not sources in any Indian country within the borders of the State): Alabama, Georgia, and South Carolina.

[76 FR 48357, Aug. 8, 2011, as amended at 77 FR 10334, Feb. 21, 2012; 79 FR 71671, Dec. 3, 2014; 81 FR 74586 and 74591, Oct. 26, 2016; 82 FR 45496, Sept. 29, 2017; 82 FR 47934, 47939, Oct. 13, 2017; 82 FR 57366, Dec. 5, 2017]

Subpart B—Alabama

§ 52.50 Identification of plan.

(a) *Purpose and scope.* This section sets forth the applicable State implementation plan for Alabama under section 110 of the Clean Air Act, 42 U.S.C. 7401, and 40 CFR part 51 to meet national ambient air quality standards.

(b) *Incorporation by reference.* (1) Material listed in paragraphs (c) and (d) of this section with an EPA approval date prior to October 1, 2017, was approved for incorporation by reference by the Director of the Federal Register in accordance with 5 U.S.C. 552(a) and 1 CFR part 51. Material is incorporated as it exists on the date of the approval, and notice of any change in the material will be published in the FEDERAL REGISTER. Entries in paragraphs (c) and (d) of this section with EPA approval dates after October 1, 2017, will be incorporated by reference in the next update to the SIP compilation.

(2) EPA Region 4 certifies that the rules/regulations provided by EPA in the SIP compilation at the addresses in paragraph (b)(3) of this section are an exact duplicate of the officially promulgated State rules/regulations which have been approved as part of the State Implementation Plan as of the dates referenced in paragraph (b)(1).

(3) Copies of the materials incorporated by reference may be inspected at the Region 4 EPA Office at 61 Forsyth Street SW, Atlanta, GA 30303. To obtain the material, please call (404) 562–9022. You may inspect the material with an EPA approval date prior to October 1, 2017, for Alabama at the National Archives and Records Administration. For information on the availability of this material at NARA go to: *http://www.archives.gov/federal-register/cfr/ibr-locations.html.*

(c) *EPA Approved Alabama Regulations.*

EPA-APPROVED ALABAMA REGULATIONS

State citation	Title/subject	State effective date	EPA approval date	Explanation
Chapter No. 335–3–1 General Provision				
Section 335–3–1–.01	Purpose	6/22/1989	3/19/1990, 55 FR 10062	
Section 335–3–1–.02	Definitions	5/19/2017	10/13/2017, 82 FR 47631	
Section 335–3–1–.03	Ambient Air Quality Standards	10/13/1998	3/1/1999, 64 FR 9918	

EPA-APPROVED ALABAMA REGULATIONS—Continued

State citation	Title/subject	State effective date	EPA approval date	Explanation
Section 335–3–1–.04 ...	Monitoring, Records, and Reporting.	10/15/1996	6/6/1997, 62 FR 30991	
Section 335–3–1–.05 ...	Sampling and Testing Methods ...	6/22/1989	3/19/1990, 55 FR 10062	
Section 335–3–1–.06 ...	Compliance Schedule	10/15/1996	6/6/1997, 62 FR 30991	
Section 335–3–1–.07 ...	Maintenance and Malfunctioning of Equipment; Reporting.	10/15/1989	3/19/1990, 55 FR 10062	
Section 335–3–1–.08 ...	Prohibition of Air Pollution	8/10/2000	12/8/2000, 65 FR 76938	
Section 335–3–1–.09 ...	Variances	10/15/1996	6/6/1997, 62 FR 30991	
Section 335–3–1–.10 ...	Circumvention	6/22/1989	3/19/1990, 55 FR 10062	
Section 335–3–1–.11 ...	Severability	10/15/1996	6/6/1997, 62 FR 30991	
Section 335–3–1–.12 ...	Bubble Provision	6/22/1989	3/19/1990, 55 FR 10062	
Section 335–3–1–.13 ...	Credible Evidence	4/13/1999	11/3/1999, 64 FR 59633	
Section 335–3–1–.14 ...	Emissions Reporting Requirements Relating to Budgets for NO_X Emissions.	4/6/2001	7/16/2001, 66 FR 36921	
Section 335–3–1–.15 ...	Emissions Inventory Reporting Requirements.	4/3/2003	4/24/2003, 68 FR 20077	
Chapter No. 335–3–2 Air Pollution Emergency				
Section 335–3–2–.01 ...	Air Pollution Emergency	6/22/1989	3/19/1990, 55 FR 10062	
Section 335–3–2–.02 ...	Episode Criteria	8/10/2000	12/8/2000, 65 FR 76940	
Section 335–3–2–.03 ...	Special Episode Criteria	6/22/1989	3/19/1990, 55 FR 10062	
Section 335–3–2–.04 ...	Emission Reduction Plans	6/22/1989	3/19/1990, 55 FR 10062	
Section 335–3–2–.05 ...	Two Contaminant Episode	6/22/1989	3/19/1990, 55 FR 10062	
Section 335–3–2–.06 ...	General Episodes	6/22/1989	3/19/1990, 55 FR 10062	
Section 335–3–2–.07 ...	Local Episodes	6/22/1989	3/19/1990, 55 FR 10062	
Section 335–3–2–.08 ...	Other Sources	10/15/1996	6/6/1997, 62 FR 30991	
Section 335–3–2–.09 ...	Other Authority Not Affected	6/22/1989	3/19/1990, 55 FR 10062	
Chapter No. 335–3–3 Control of Open Burning and Incineration				
Section 335–3–3–.01 ...	Open Burning	1/22/2008	9/15/2008, 73 FR 53134	
Section 335–3–3–.02 ...	Incinerators	6/22/1989	3/19/1990, 55 FR 10062	
Section 335–3–3–.03 ...	Incineration of Wood, Peanut, and Cotton Ginning Waste.	8/10/2000	12/8/2000, 65 FR 76938	
Chapter No. 335–3–4 Control of Particulate Emissions				
Section 335–3–4–.01 ...	Visible Emissions	9/30/2008	10/15/2008, 73 FR 60957	
Section 335–3–4–.02 ...	Fugitive Dust and Fugitive Emissions.	10/15/1996	6/6/1997, 62 FR 30991	
Section 335–3–4–.03 ...	Fuel Burning Equipment	10/15/1996	6/6/1997, 62 FR 30991	
Section 335–3–4–.04 ...	Process Industries—General	10/15/1996	6/6/1997, 62 FR 30991	
Section 335–3–4–.05 ...	Small Foundry Cupola	6/22/1989	3/19/1990, 55 FR 10062	
Section 335–3–4–.06 ...	Cotton Gins	6/22/1989	3/19/1990, 55 FR 10062	
Section 335–3–4–.07 ...	Kraft Pulp Mills	10/15/1996	6/6/1997, 62 FR 30991	
Section 335–3–4–.08 ...	Wood Waste Boilers	6/9/2017	10/13/2017, 82 FR 47631	
Section 335–3–4–.09 ...	Coke Ovens	8/10/2000	12/8/2000, 65 FR 76940	
Section 335–3–4–.10 ...	Primary Aluminum Plants	6/22/1989	3/19/1990, 55 FR 10062	
Section 335–3–4–.11 ...	Cement Plants	10/15/1996	6/6/1997, 62 FR 30991	
Section 335–3–4–.12 ...	Xylene Oxidation Process	6/22/1989	3/19/1990, 55 FR 10062	
Section 335–3–4–.13 ...	Sintering Plants	6/22/1989	3/19/1990, 55 FR 10062	
Section 335–3–4–.14 ...	Grain Elevators	10/15/1996	6/6/1997, 62 FR 30991	
Section 335–3–4–.15 ...	Secondary Lead Smelters	10/15/1996	6/6/1997, 62 FR 30991	
Section 335–3–4–.17 ...	Steel Mills Located in Etowah County.	10/15/1996	6/6/1997, 62 FR 30991	
Chapter No. 335–3–5 Control of Sulfur Compound Emissions				
Section 335–3–5–.01 ...	Fuel Combustions	10/15/1996	6/6/1997, 62 FR 30991	
Section 335–3–5–.02 ...	Sulfuric Acid Plants	10/15/1996	6/6/1997, 62 FR 30991	
Section 335–3–5–.03 ...	Petroleum Production	8/10/2000	12/8/2000, 65 FR 76938	
Section 335–3–5–.04 ...	Kraft Pulp Mills	8/10/2000	12/8/2000, 65 FR 76938	
Section 335–3–5–.05 ...	Process Industries—General	6/22/1989	3/19/1990, 55 FR 10062	
Section 335–3–5–.06 ...	State Clean Air Interstate Rule (CAIR) SO_2 Trading Program General Provisions.	4/3/2007	10/1/2007, 72 FR 55659	
Section 335–3–5–.06 ...	TR SO_2 Trading Program—Purpose and Definitions.	11/24/2015	8/31/2016, 81 FR 59869	Both sections of 335–3–5–.06 are included in the approved SIP.

EPA-APPROVED ALABAMA REGULATIONS—Continued

State citation	Title/subject	State effective date	EPA approval date	Explanation
Section 335–3–5–.07 ...	CAIR Designated Representative for CAIR SO_2 Sources.	4/3/2007	10/1/2007, 72 FR 55659	
Section 335–3–5–.07 ...	TR SO_2 Trading Program—Applicability.	11/24/2015	8/31/2016, 81 FR 59869	Both sections of 335–3–5–.07 are included in the approved SIP.
Section 335–3–5–.08 ...	Permits	4/3/2007	10/1/2007, 72 FR 55659	
Section 335–3–5–.08 ...	TR SO_2 Trading Program—Retired Unit Exemption.	11/24/2015	8/31/2016, 81 FR 59869	Both sections of 335–3–5–.08 are included in the approved SIP.
Section 335–3–5–.09 ...	TR SO_2 Trading Program—Standard Requirements.	11/24/2015	8/31/2016, 81 FR 59869	
Section 335–3–5–.10 ...	TR SO_2 Trading Program—computation of Time.	11/24/2015	8/31/2016, 81 FR 59869	
Section 335–3–5–.11 ...	CAIR SO_2 Allowance Tracking System.	4/3/2007	10/1/2007, 72 FR 55659	
Section 335–3–5–.11 ...	Administrative Appeal Procedures.	11/24/2015	8/31/2016, 81 FR 59869	Both sections of 335–3–5–.11 are included in the approved SIP.
Section 335–3–5–.12 ...	CAIR SO_2 Allowance Transfers ..	4/3/2007	10/1/2007, 72 FR 55659	
Section 335–3–5–.12 ...	SO_2 Trading Budgets and Variability Limits.	11/24/2015	8/31/2016, 81 FR 59869	Both sections of 335–3–5–.12 are included in the approved SIP.
Section 335–3–5–.13 ...	Monitoring and Reporting	4/3/2007	10/1/2007, 72 FR 55659	
Section 335–3–5–.13 ...	TR SO_2 Allowance Allocations	11/24/2015	8/31/2016, 81 FR 59869	Both sections of 335–3–5–.13 are included in the approved SIP.
Section 335–3–5–.14 ...	CAIR SO_2 Opt-in Units	4/3/2007	10/1/2007, 72 FR 55659	
Section 335–3–5–.14 ...	Authorization of Designated Representative and Alternate Designated Representative.	11/24/2015	8/31/2016, 81 FR 59869	Both sections of 335–3–5–.14 are included in the approved SIP.
Section 335–3–5–.15 ...	Responsibilities of Designated Representative and Alternate Designated Representative.	11/24/2015	8/31/2016, 81 FR 59869	
Section 335–3–5–.16 ...	Changing Designated Representative and Alternate Designated Representative; Changes in Owners and Operators; Changes in Units at the Source.	11/24/2015	8/31/2016, 81 FR 59869	
Section 335–3–5–.17 ...	Certificate of Representation	11/24/2015	8/31/2016, 81 FR 59869	
Section 335–3–5–.18 ...	Objections Concerning Designated Representative and Alternate Designated Representative.	11/24/2015	8/31/2016, 81 FR 59869	
Section 335–3–5–.19 ...	Delegation by Designated Representative and Alternate Designated Representative.	11/24/2015	8/31/2016, 81 FR 59869	
Section 335–3–5–.21 ...	Establishment of Compliance Accounts, Assurance Accounts, and General Accounts.	11/24/2015	8/31/2016, 81 FR 59869	
Section 335–3–5–.22 ...	Recordation of TR SO_2 Allowance Allocations and Auction Results.	11/24/2015	8/31/2016, 81 FR 59869	
Section 335–3–5–.23 ...	Submission of TR SO_2 Allowance Transfers.	11/24/2015	8/31/2016, 81 FR 59869	
Section 335–3–5–.24 ...	Recordation of TR SO_2 Allowance Transfers.	11/24/2015	8/31/2016, 81 FR 59869	
Section 335–3–5–.25 ...	Compliance with TR SO_2 Emissions Limitation.	11/24/2015	8/31/2016, 81 FR 59869	
Section 335–3–5–.26 ...	Compliance with TR SO_2 Assurance Provisions.	11/24/2015	8/31/2016, 81 FR 59869	
Section 335–3–5–.27 ...	Banking	11/24/2015	8/31/2016, 81 FR 59869	
Section 335–3–5–.28 ...	Account Error	11/24/2015	8/31/2016, 81 FR 59869	
Section 335–3–5–.29 ...	Administrator's Action on Submissions.	11/24/2015	8/31/2016, 81 FR 59869	

EPA-APPROVED ALABAMA REGULATIONS—Continued

State citation	Title/subject	State effective date	EPA approval date	Explanation
Section 335–3–5–.31 ...	General Monitoring, Recordkeeping, and Reporting Requirements.	11/24/2015	8/31/2016, 81 FR 59869	
Section 335–3–5–.32 ...	Initial Monitoring System Certification and Recertification Procedures.	11/24/2015	8/31/2016, 81 FR 59869	
Section 335–3–5–.33 ...	Monitoring System Out-of-Control Periods.	11/24/2015	8/31/2016, 81 FR 59869	
Section 335–3–5–.34 ...	Notifications Concerning Monitoring.	11/24/2015	8/31/2016, 81 FR 59869	
Section 335–3–5–.35 ...	Recordkeeping and Reporting	11/24/2015	8/31/2016, 81 FR 59869	
Section 335–3–5–.36 ...	Petitions for Alternatives to Monitoring, Recordkeeping, or Reporting Requirements.	11/24/2015	8/31/2016, 81 FR 59869	
Chapter No. 335–3–6 Control of Organic Emissions				
Section 335–3–6–.01 ...	Applicability	10/15/1996	6/6/1997, 62 FR 30991	
Section 335–3–6–.02 ...	VOC Water Separation	4/15/1987	9/27/1993, 58 FR 50262	
Section 335–3–6–.03 ...	Loading and Storage of VOC	4/15/1987	9/27/1993, 58 FR 50262	
Section 335–3–6–.04 ...	Fixed–Roof Petroleum Liquid Storage Vessels.	10/15/1996	6/6/1997, 62 FR 30991	
Section 335–3–6–.05 ...	Bulk Gasoline Plants	10/15/1996	6/6/1997, 62 FR 30991	
Section 335–3–6–.06 ...	Bulk Gasoline Terminals	8/10/2000	12/8/2000, 65 FR 76938	
Section 335–3–6–.07 ...	Gasoline Dispensing Facilities—Stage I.	10/15/1996	6/6/1997, 62 FR 30991	
Section 335–3–6–.08 ...	Petroleum Refinery Sources	6/22/1989	3/19/1990, 55 FR 10062	
Section 335–3–6–.09 ...	Pumps and Compressors	6/22/1989	3/19/1990, 55 FR 10062	
Section 335–3–6–.10 ...	Ethylene Producing Plants	6/22/1989	3/19/1990, 55 FR 10062	
Section 335–3–6–.11 ...	Surface Coating	10/15/1996	6/6/1997, 62 FR 30991	
Section 335–3–6–.12 ...	Solvent Metal Cleaning	10/15/1996	6/6/1997, 62 FR 30991	
Section 335–3–6–.13 ...	Cutback Asphalt	10/15/1996	6/6/1997, 62 FR 30991	
Section 335–3–6–.14 ...	Petition for Alternative Controls ...	6/22/1989	3/19/1990, 55 FR 10062	
Section 335–3–6–.15 ...	Compliance Schedules	10/15/1996	6/6/1997, 62 FR 30991	
Section 335–3–6–.16 ...	Test Methods and Procedures	8/10/2000	12/8/2000, 65 FR 76938	
Section 335–3–6–.17 ...	Manufacture of Pneumatic Tires	10/15/1996	6/6/1997, 62 FR 30991	
Section 335–3–6–.18 ...	Manufacture of Synthesized Pharmaceutical Products.	10/15/1996	6/6/1997, 62 FR 30991	
Section 335–3–6–.20 ...	Leaks from Gasoline Tank Trucks and Vapor Collection Systems.	10/15/1996	6/6/1997, 62 FR 30991	
Section 335–3–6–.21 ...	Leaks from Petroleum Refinery Equipment.	10/15/1996	6/6/1997, 62 FR 30991	
Section 335–3–6–.22 ...	Graphic Arts	10/15/1996	6/6/1997, 62 FR 30991	
Section 335–3–6–.23 ...	Petroleum Liquid Storage in External Floating Roof Tanks.	10/15/1996	6/6/1997, 62 FR 30991	
Section 335–3–6–.24 ...	Applicability	10/15/1996	6/6/1997, 62 FR 30991	
Section 335–3–6–.25 ...	VOC Water Separation	6/22/1989	3/19/1990, 55 FR 10062	
Section 335–3–6–.26 ...	Loading and Storage of VOC	4/15/1987	9/27/1993, 58 FR 50262	
Section 335–3–6–.27 ...	Fixed-Roof Petroleum Liquid Storage Vessels.	10/15/1996	6/6/1997, 62 FR 30991	
Section 335–3–6–.28 ...	Bulk Gasoline Plants	10/15/1996	6/6/1997, 62 FR 30991	
Section 335–3–6–.29 ...	Gasoline Terminals	10/15/1996	6/6/1997, 62 FR 30991	
Section 335–3–6–.30 ...	Gasoline Dispensing Facilities Stage 1.	10/15/1996	6/6/1997, 62 FR 30991	
Section 335–3–6–.31 ...	Petroleum Refinery Sources	4/15/1987	9/27/1993, 58 FR 50262	
Section 335–3–6–.32 ...	Surface Coating	10/15/1996	6/6/1997, 62 FR 30991	
Section 335–3–6–.33 ...	Solvent Metal Cleaning	10/15/1996	6/6/1997, 62 FR 30991	
Section 335–3–6–.34 ...	Cutback Asphalt	10/15/1996	6/6/1997, 62 FR 30991	
Section 335–3–6–.35 ...	Petition for Alternative Controls ...	4/15/1987	9/27/1993, 58 FR 50262	
Section 335–3–6–.36 ...	Compliances Schedules	10/15/1996	6/6/1997, 62 FR 30991	
Section 335–3–6–.37 ...	Test Methods and Procedures	10/15/1996	6/6/1997, 62 FR 30991	
Section 335–3–6–.38 ...	Manufacture of Pneumatic Tires	6/22/1989	3/19/1990, 55 FR 10062	
Section 335–3–6–.39 ...	Manufacture of Synthesized Pharmaceutical Products.	10/15/1996	6/6/1997, 62 FR 30991	
Section 335–3–6–.41 ...	Leaks from Gasoline Tank Trucks and Vapor Collection Systems.	10/15/1996	6/6/1997, 62 FR 30991	
Section 335–3–6–.42 ...	Leaks from Petroleum Refinery Equipment.	10/15/1996	6/6/1997, 62 FR 30991	
Section 335–3–6–.43 ...	Graphic Arts	10/15/1996	6/6/1997, 62 FR 30991	

EPA-APPROVED ALABAMA REGULATIONS—Continued

State citation	Title/subject	State effective date	EPA approval date	Explanation
Section 335–3–6–.44 ...	Petroleum Liquid Storage in External Floating Roof Tanks.	10/15/1996	6/6/1997, 62 FR 30991	
Section 335–3–6–.45 ...	Large Petroleum Dry Cleaners	10/15/1996	6/6/1997, 62 FR 30991	
Section 335–3–6–.46 ...	Aerospace Assembly and Component and Component Coatings Operation.	6/22/1989	6/6/1997, 62 FR 30991	
Section 335–3–6–.47 ...	Leaks from Coke by-Product Recovery Plant Equipment.	10/15/1996	6/6/1997, 62 FR 30991	
Section 335–3–6–.48 ...	Emissions from Coke by-Product Recovery Plant Coke Oven Gas Bleeder.	10/15/1996	6/6/1997, 62 FR 30991	
Section 335–3–6–.49 ...	Manufacture of Laminated Countertops.	10/15/1996	6/6/1997, 62 FR 30991	
Section 335–3–6–.50 ...	Paint Manufacture	10/15/1996	6/6/1997, 62 FR 30991	
Section 335–3–6–.53 ...	List of EPA Approved and Equivalent Test Methods and Procedures for the Purpose of Determining VOC Emissions.	10/15/1996	6/6/1997, 62 FR 30991	
Chapter No. 335–3–7 Carbon Monoxide Emissions				
Section 335–3–7–.01 ...	Metals Productions	6/22/1989	3/19/1990, 55 FR 10062	
Section 335–3–7–.02 ...	Petroleum Processes	6/22/1989	3/19/1990, 55 FR 10062	
Chapter No. 335–3–8 Control of Nitrogen Oxides Emissions				
Section 335–3–8–.01 ...	Standards for Portland Cement Kilns.	4/6/2001	7/17/2001, 66 FR 36919	
Section 335–3–8–.02 ...	Nitric Acid Manufacturing	10/15/1996	6/6/1997, 62 FR 30991	
Section 335–3–8–.03 ...	NO_X Emissions from Electric Utility Generating Units.	10/24/2000	11/7/2001, 66 FR 56223	
Section 335–3–8–.04 ...	Standards for Stationary Reciprocating Internal Combustion Engines.	3/22/2005	12/28/2005, 70 FR 76694	
Section 335–3–8–.05 ...	NO_X Budget Trading Program	4/3/2007	10/1/2007, 72 FR 55659	
Section 335–3–8–.06 ...	Authorized Account Representative for NO_X Budget Sources.	4/6/2001	7/16/2001, 66 FR 36919	
Section 335–3–8–.07 ...	Permits	4/6/2001	7/16/2001, 66 FR 36919	
Section 335–3–8–.07 ...	TR NO_X Annual Trading Program—Purpose and Definitions.	11/24/2015	8/31/2016, 81 FR 59869	Both sections of 335–3–8–.07 are included in the approved SIP.
Section 335–3–8–.08 ...	Compliance Certification	4/6/2001	7/16/2001, 66 FR 36919	
Section 335–3–8–.08 ...	TR NO_X Annual Trading Program—Applicability.	11/24/2015	8/31/2016, 81 FR 59869	Both sections of 335–3–8–.08 are included in the approved SIP.
Section 335–3–8–.09 ...	NO_X Allowance Allocations	4/6/2001	7/16/2001, 66 FR 36919	
Section 335–3–8–.09 ...	TR NO_X Annual Trading Program—Retired Unit Exemption.	11/24/2015	8/31/2016, 81 FR 59869	Both sections of 335–3–8–.09 are included in the approved SIP.
Section 335–3–8–.10 ...	NO_X Allowance Tracking System	4/3/2007	10/1/2007, 72 FR 55659	
Section 335–3–8–.10 ...	TR NO_X Annual Trading Program—Standard Requirements.	11/24/2015	8/31/2016, 81 FR 59869	Both sections of 335–3–8–.10 are included in the approved SIP.
Section 335–3–8–.11 ...	NO_X Allowance Transfers	4/6/2001	7/16/2001, 66 FR 36919	
Section 335–3–8–.11 ...	TR NO_X Annual Trading Program—Computation of Time.	11/24/2015	8/31/2016, 81 FR 59869	Both sections of 335–3–8–.11 are included in the approved SIP.
Section 335–3–8–.12 ...	Monitoring and Reporting	4/6/2001	7/16/2001, 66 FR 36919	
Section 335–3–8–.12 ...	Administrative Appeal Procedures.	11/24/2015	8/31/2016, 81 FR 59869	Both sections of 335–3–8–.12 are included in the approved SIP.
Section 335–3–8–.13 ...	Individual Unit Opt–ins	4/6/2001	7/16/2001, 66 FR 36919	

EPA-APPROVED ALABAMA REGULATIONS—Continued

State citation	Title/subject	State effective date	EPA approval date	Explanation
Section 335–3–8–.13 ...	NO_X Annual Trading Budgets and Variability Limits.	11/24/2015	8/31/2016, 81 FR 59869	Both sections of 335–3–8–.13 are included in the approved SIP.
Section 335–3–8–.14 ...	New Combustion Sources	4/6/2001	7/16/2001, 66 FR 36919	
Section 335–3–8–.14 ...	TR NO_X Annual Allowance Allocations.	11/24/2015	8/31/2016, 81 FR 59869	Both sections of 335–3–8–.14 are included in the approved SIP.
Section 335–3–8–.16 ...	CAIR NO_X Annual Budget Trading Program.	4/3/2007	10/1/2007, 72 FR 55659	
Section 335–3–8–.16 ...	Authorization of Designated Representative and Alternate Designated Representative.	11/24/2015	8/31/2016, 81 FR 59869	Both sections of 335–3–8–.16 are included in the approved SIP.
Section 335–3–8–.17 ...	CAIR Designated Representative for CAIR NO_X Sources.	4/3/2007	10/1/2007, 72 FR 55659	
Section 335–3–8–.17 ...	Responsibilities of Designated Representative and Alternate Designated Representative.	11/24/2015	8/31/2016, 81 FR 59869	Both sections of 335–3–8–.17 are included in the approved SIP.
Section 335–3–8–.18 ...	CAIR Permits	4/3/2007	10/1/2007, 72 FR 55659	
Section 335–3–8–.18 ...	Changing Designated Representative and Alternate Designated Representative; Changes in Owners and Operators; Changes in Units at the Source.	11/24/2015	8/31/2016, 81 FR 59869	Both sections of 335–3–8–.18 are included in the approved SIP.
Section 335–3–8–.19 ...	Certificate of Representation	11/24/2015	8/31/2016, 81 FR 59869	
Section 335–3–8–.20 ...	CAIR NO_X Allowance Allocations	4/3/2007	10/1/2007, 72 FR 55659	
Section 335–3–8–.20 ...	Objections Concerning Designated Representative and Alternate Designated Representative.	11/24/2015	8/31/2016, 81 FR 59869	Both sections of 335–3–8–.20 are included in the approved SIP.
Section 335–3–8–.21 ...	CAIR NO_X Allowance Tracking System.	4/3/2007	10/1/2007, 72 FR 55659	
Section 335–3–8–.21 ...	Delegation by Designated Representative and Alternate Designated Representative.	11/24/2015	8/31/2016, 81 FR 59869	Both sections of 335–3–8–.21 are included in the approved SIP.
Section 335–3–8–.23 ...	CAIR Monitoring and Reporting ..	4/3/2007	10/1/2007, 72 FR 55659	
Section 335–3–8–.23 ...	Establishment of Compliance Accounts, Assurance Accounts, and General Accounts.	11/24/2015	8/31/2016, 81 FR 59869	Both sections of 335–3–8–.23 are included in the approved SIP.
Section 335–3–8–.24 ...	CAIR NO_X Opt-in Units	4/3/2007	10/1/2007, 72 FR 55659	
Section 335–3–8–.24 ...	Recordation of TR NO_X Annual Allowance Allocations and Auction Results.	11/24/2015	8/31/2016, 81 FR 59869	Both sections of 335–3–8–.24 are included in the approved SIP.
Section 335–3–8–.25 ...	CAIR NO_X Ozone Season Trading Program.	4/3/2007	10/1/2007, 72 FR 55659	
Section 335–3–8–.25 ...	Submission of TR NO_X Annual Allowance Transfers.	11/24/2015	8/31/2016, 81 FR 59869	Both sections of 335–3–8–.25 are included in the approved SIP.
Section 335–3–8–.26 ...	CAIR Designated Representative for CAIR NO_X Ozone Season Sources.	4/3/2007	10/1/2007, 72 FR 55659	
Section 335–3–8–.26 ...	Recordation of TR NO_X Annual Allowance Transfers.	11/24/2015	8/31/2016, 81 FR 59869	Both sections of 335–3–8–.26 are included in the approved SIP.
Section 335–3–8–.27 ...	CAIR NO_X Ozone Season Permits.	4/3/2007	10/1/2007, 72 FR 55659	
Section 335–3–8–.27 ...	Compliance with TR NO_X Annual Emissions Limitation.	11/24/2015	8/31/2016, 81 FR 59869	Both sections of 335–3–8–.27 are included in the approved SIP.
Section 335–3–8–.28 ...	Compliance with TR NO_X Annual Assurance Provisions.	11/24/2015	8/31/2016, 81 FR 59869	

EPA-APPROVED ALABAMA REGULATIONS—Continued

State citation	Title/subject	State effective date	EPA approval date	Explanation
Section 335–3–8–.29 ...	CAIR NO_X Ozone Season Allowance Allocations.	4/3/2007	10/1/2007, 72 FR 55659	
Section 335–3–8–.29 ...	Banking	11/24/2015	8/31/2016, 81 FR 59869	Both sections of 335–3–8–.29 are included in the approved SIP.
Section 335–3–8–.30 ...	CAIR NO_X Ozone Season Allowance Tracking System.	4/3/2007	10/1/2007, 72 FR 55659	
Section 335–3–8–.30 ...	Account Error	11/24/2015	8/31/2016, 81 FR 59869	Both sections of 335–3–8–.30 are included in the approved SIP.
Section 335–3–8–.31 ...	Administrator's Action on Submissions.	11/24/2015	8/31/2016, 81 FR 59869	
Section 335–3–8–.32 ...	CAIR NO_X Ozone Season Monitoring and Reporting.	4/3/2007	10/1/2007, 72 FR 55659	
Section 335–3–8–.33 ...	CAIR NO_X Ozone Season Opt-in Units.	4/3/2007	10/1/2007, 72 FR 55659	
Section 335–3–8–.33 ...	General Monitoring, Recordkeeping, and Reporting Requirements.	11/24/2015	8/31/2016, 81 FR 59869	Both sections of 335–3–8–.33 are included in the approved SIP.
Section 335–3–8–.34 ...	Initial Monitoring System Certification and Recertification Procedures.	11/24/2015	8/31/2016, 81 FR 59869	
Section 335–3–8–.35 ...	Monitoring System Out-of-Control Periods.	11/24/2015	8/31/2016, 81 FR 59869	
Section 335–3–8–.36 ...	Notifications Concerning Monitoring.	11/24/2015	8/31/2016, 81 FR 59869	
Section 335–3–8–.37 ...	Recordkeeping and Reporting	11/24/2015	8/31/2016, 81 FR 59869	
Section 335–3–8–.38 ...	Petitions for Alternatives to Monitoring, Recordkeeping, or Reporting Requirements.	11/24/2015	8/31/2016, 81 FR 59869	
Section 335–3–8–.39 ...	TR NO_X Ozone Season Group 2 Trading Program—Purpose and Definitions.	6/9/2017	10/6/2017, 82 FR 46674	
Section 335–3–8–.40 ...	TR NO_X Ozone Season Group 2 Trading Program—Applicability.	11/24/2015	10/6/2017, 82 FR 46674	
Section 335–3–8–.41 ...	TR NO_X Ozone Season Group 2 Trading Program—Retired Unit Exemption.	6/9/2017	10/6/2017, 82 FR 46674	
Section 335–3–8–.42 ...	TR NO_X Ozone Season Group 2 Trading Program—Standard Requirements.	6/9/2017	10/6/2017, 82 FR 46674	
Section 335–3–8–.43 ...	TR NO_X Ozone Season Group 2 Trading Program—Computation of Time.	6/9/2017	10/6/2017, 82 FR 46674	
Section 335–3–8–.44 ...	Administrative Appeal Procedures.	11/24/2015	10/6/2017, 82 FR 46674	
Section 335–3–8–.45 ...	NO_X Ozone Season Group 2 Trading Budgets and Variability Limits.	6/9/2017	10/6/2017, 82 FR 46674	
Section 335–3–8–.46 ...	TR NO_X Ozone Season Group 2 Allowance Allocations.	6/9/2017	10/6/2017, 82 FR 46674	
Section 335–3–8–.48 ...	Authorization of Designated Representative and Alternate Designated Representative.	6/9/2017	10/6/2017, 82 FR 46674	
Section 335–3–8–.49 ...	Responsibilities of Designated Representative and Alternate Designated Representative.	6/9/2017	10/6/2017, 82 FR 46674	
Section 335–3–8–.50 ...	Changing Designated Representative and Alternate Designated Representative; Changes in Owners and Operators; Changes in Units at the Source.	6/9/2017	10/6/2017, 82 FR 46674	
Section 335–3–8–.51 ...	Certificate of Representation	6/9/2017	10/6/2017, 82 FR 46674	
Section 335–3–8–.52 ...	Objections Concerning Designated Representative and Alternate Designated Representative.	6/9/2017	10/6/2017, 82 FR 46674	

EPA-APPROVED ALABAMA REGULATIONS—Continued

State citation	Title/subject	State effective date	EPA approval date	Explanation
Section 335–3–8–.53 ...	Delegation by Designated Representative and Alternate Designated Representative.	6/9/2017	10/6/2017, 82 FR 46674	
Section 335–3–8–.55 ...	Establishment of Compliance Accounts, Assurance Accounts, and General Accounts.	6/9/2017	10/6/2017, 82 FR 46674	
Section 335–3–8–.56 ...	Recordation of TR NO_X Ozone Season Group 2 Allowance Allocations and Auction Results.	6/9/2017	10/6/2017, 82 FR 46674	
Section 335–3–8–.57 ...	Submission of TR NO_X Ozone Season Group 2 Allowance Transfers.	6/9/2017	10/6/2017, 82 FR 46674	
Section 335–3–8–.58 ...	Recordation of TR NO_X Ozone Season Group 2 Allowance Transfers.	6/9/2017	10/6/2017, 82 FR 46674	
Section 335–3–8–.59 ...	Compliance with TR NO_X Ozone Season Group 2 Emissions Limitation.	6/9/2017	10/6/2017, 82 FR 46674	
Section 335–3–8–.60 ...	Compliance with TR NO_X Ozone Season Group 2 Assurance Provisions.	6/9/2017	10/6/2017, 82 FR 46674	
Section 335–3–8–.61 ...	Banking	6/9/2017	10/6/2017, 82 FR 46674	
Section 335–3–8–.62 ...	TR NO_X Ozone Season Group 2 Trading Program—Account Error.	6/9/2017	10/6/2017, 82 FR 46674	
Section 335–3–8–.63 ...	TR NO_X Ozone Season Group 2 Trading Program—Administrator's Action on Submissions.	6/9/2017	10/6/2017, 82 FR 46674	
Section 335–3–8–.65 ...	General Monitoring, Recordkeeping, and Reporting Requirements.	6/9/2017	10/6/2017, 82 FR 46674	
Section 335–3–8–.66 ...	Initial Monitoring System Certification and Recertification Procedures.	6/9/2017	10/6/2017, 82 FR 46674	
Section 335–3–8–.67 ...	Monitoring System Out-of-Control Periods.	6/9/2017	10/6/2017, 82 FR 46674	
Section 335–3–8–.68 ...	Notifications Concerning Monitoring.	6/9/2017	10/6/2017, 82 FR 46674	
Section 335–3–8–.69 ...	Recordkeeping and Reporting	6/9/2017	10/6/2017, 82 FR 46674	
Section 335–3–8–.70 ...	Petitions for Alternatives to Monitoring, Recordkeeping, or Reporting Requirements.	6/9/2017	10/6/2017, 82 FR 46674	
Chapter No. 335–3–9 Control of Emissions from Motor Vehicles				
Section 335–3–9–.01 ...	Visible Emission Restriction for Motor Vehicles.	10/15/1996	6/6/1997, 62 FR 30991	
Section 335–3–9–.02 ...	Ignition System and Engine Speed.	8/10/2000	12/8/2000, 65 FR 76938	
Section 335–3–9–.03 ...	Crankcase Ventilation Systems ...	8/10/2000	12/8/2000, 65 FR 76938	
Section 335–3–9–.04 ...	Exhaust Emission Control Systems.	6/22/1989	3/19/1990, 55 FR 10062	
Section 335–3–9–.05 ...	Evaporative Loss Control Systems.	6/22/1989	3/19/1990, 55 FR 10062	
Section 335–3–9–.06 ...	Other Prohibited Acts	8/10/2000	12/8/2000, 65 FR 76938	
Section 335–3–9–.07 ...	Effective Date	10/15/1996	6/6/1997, 62 FR 30991	
Chapter No. 335–3–12 Continuous Monitoring Requirements for Existing Sources				
Section 335–3–12–.01	General	6/22/1989	3/19/1990, 55 FR 10062	
Section 335–3–12–.02	Emission Monitoring and Reporting Requirements.	2/17/1998	9/14/1998, 63 FR 49005	
Section 335–3–12–.03	Monitoring System Malfunction ...	6/22/1989	3/19/1990, 55 FR 10062	
Section 335–3–12–.04	Alternate Monitoring and Reporting Requirements.	6/22/1989	3/19/1990, 55 FR 10062	
Section 335–3–12–.05	Exemptions and Extensions	6/22/1989	3/19/1990; 55 FR 10062	
Chapter No. 335–3–13 Control of Fluoride Emissions				
Section 335–3–13–.01	General	10/15/1996	6/6/1997, 62 FR 30991	
Section 335–3–13–.02	Superphosphoric Acid Plants	10/15/1996	6/6/1997, 62 FR 30991	
Section 335–3–13–.03	Diammonium Phosphate Plants ..	10/15/1996	6/6/1997, 62 FR 30991	

EPA-APPROVED ALABAMA REGULATIONS—Continued

State citation	Title/subject	State effective date	EPA approval date	Explanation
Section 335–3–13–.04	Triple Superphosphoric Plants	10/15/1996	6/6/1997, 62 FR 30991	
Section 335–3–13–.05	Granular Triple Superphosphoric Storage Facilities.	10/15/1996	6/6/1997, 62 FR 30991	
Section 335–3–13–.06	Wet Process Phosphoric Acid Plants.	10/15/1996	6/6/1997, 62 FR 30991	
Chapter No. 335–3–14 Air Permits				
Section 335–3–14–.01	General Provisions	2/17/1998	9/14/1998, 63 FR 49005	
Section 335–3–14–.02	Permit Procedures	10/15/1996	6/6/1997, 62 FR 30991	
Section 335–3–14–.03	Standards for Granting Permits ...	5/23/2011	9/26/2012, 77 FR 59100.	
Section 335–3–14–.04	Air Permits Authorizing Construction in Clean Air Areas (Prevention of Significant Deterioration (PSD)).	11/25/20147	10/10/2017, 82 FR 469214	
Section 335–3–14–.05	Air Permits Authorizing Construction in or Near Nonattainment Areas.	5/23/2011	1/11/2016, 81 FR 1124	With the exception of: The portion of 335–3–14–.05(1)(k) stating ''excluding ethanol production facilities that produce ethanol by natural fermentation''; and 335–3–14–.05(2)(c)3 (addressing fugitive emission increases and decreases). Also with the exception of the state-withdrawn elements: 335–3–14–.05(1)(h) (the actual-to-potential test for projects that only involve existing emissions units); the last sentence at 335–3–14–.05(3)(g), stating ''Interpollutant offsets shall be determined based upon the following ratios''; and the NNSR interpollutant ratios at 335–3–14–.05(3)(g)1–4.
Chapter No. 335–3–15 Synthetic Minor Operating Permits				
Section 335–3–15–.01	Definitions	10/15/1996	6/6/1997, 62 FR 30991	
Section 335–3–15–.02	General Provisions	8/10/2000	12/8/2000, 65 FR 76938	
Section 335–3–15–.03	Applicability	11/23/1993	10/20/1994, 59 FR 52916	
Section 335–3–15–.04	Synthetic Minor Operating Permit Requirements.	10/15/1996	6/6/1997, 62 FR 30991	
Section 335–3–15–.05	Public Participation	10/15/1996	6/6/1997, 62 FR 30991	
Chapter No. 335–3–17 Conformity of Federal Actions to State Implementation Plans				
Section 335–3–17–.01	Transportation Conformity	5/28/2013	10/12/2017, 82 FR 47383	
Section 335–3–17–.02	General Conformity	5/23/2011	9/26/2012, 77 FR 59100	

(d) *EPA approved Alabama source specific requirements.*

EPA APPROVED ALABAMA SOURCE-SPECIFIC REQUIREMENTS

Name of source	Permit No.	State effective date	EPA approval date	Explanation
Lafarge Cement Kiln	AB70004__1__01	2/6/2008	7/30/2009, 74 FR 37945	Certain provisions of the permit.
Lehigh Cement Kiln	4–07–0290–03	2/6/2008	7/30/2009, 74 FR 37945	Certain provisions of the permit.

(e) *EPA Approved Alabama Non-Regulatory Provisions.*

EPA APPROVED ALABAMA NON-REGULATORY PROVISIONS

Name of nonregulatory SIP provision	Applicable geographic or nonattainment area	State submittal date/effective date	EPA approval date	Explanation
Attainment Plan for the Alabama Portion of the Chattanooga 1997 Annual $PM_{2.5}$ Nonattainment Area.	A portion of Jackson County, Alabama.	10/07/2009	10/5/2012, 77 FR 60904.	
Birmingham 1990 Baseline Emissions Inventory.	Birmingham Ozone Nonattainment Area.	11/13/1992	6/4/1999, 64 FR 29961.	
Alabama Interagency Transportation Conformity Memorandum of Agreement.		1/20/2000	5/11/2000, 65 FR 30362.	
Alabama Fuel Waiver Request—Appendix II of Attainment Demonstration of the 1-hour NAAQS for Ozone for the Birmingham Nonattainment Area.	Birmingham Ozone Nonattainment Area.	12/1/2000	11/7/2001, 66 FR 56220.	
Attainment Demonstration of the 1-hour NAAQS for Ozone for the Birmingham Nonattainment Area.	Birmingham Ozone Nonattainment Area.	12/1/2000	11/7/2001, 66 FR 56224.	
Maintenance Plan for the Birmingham area.	Jefferson County and Shelby County.	1/30/2004	3/12/2004, 69 FR 11800.	
8-Hour Ozone Maintenance plan for the Birmingham area.	Jefferson County and Shelby County.	1/26/2006	5/12/2006, 71 FR 27631.	
Conformity SIP for Birmingham and Jackson County.	Jefferson County, Shelby County, Jackson County.	12/12/2008	3/26/2009, 74 FR 13118.	
110(a)(1) and (2) Infrastructure Requirements for the 1997 8-Hour Ozone National Ambient Air Quality Standards.	Alabama	12/10/2007	7/13/2011, 76 FR 41088	For the 1997 8-hour ozone NAAQS.
Chattanooga; Fine Particulate Matter 2002 Base Year Emissions Inventory.	Jackson County	7/31/2009	2/8/2012, 77 FR 6467.	
Regional haze plan	Statewide	7/15/2008	6/28/2012, 77 FR 38515..	
110(a)(1) and (2) Infrastructure Requirements for 1997 Fine Particulate Matter National Ambient Air Quality Standards.	Alabama	7/25/2008	10/1/2012, 77 FR 59755	With the exception of sections 110(a)(2)(D)(i) and 110(a)(2)(E)(ii).
110(a)(1) and (2) Infrastructure Requirements for 2006 Fine Particulate Matter National Ambient Air Quality Standards.	Alabama	9/23/2009	10/1/2012, 77 FR 59755	With the exception of sections 110(a)(2)(D)(i) and 110(a)(2)(E)(ii).
1997 Annual $PM_{2.5}$ Maintenance Plan for the Birmingham Area.	Birmingham $PM_{2.5}$ Nonattainment Area.	5/2/2011	1/22/2013, 78 FR 4341.	
2006 24-hour $PM_{2.5}$ Maintenance Plan for the Birmingham Area.	Birmingham $PM_{2.5}$ Nonattainment Area.	6/17/2010	1/25/2013, 78 FR 5306 ..	
110(a)(1) and (2) Infrastructure Requirements for 1997 Fine Particulate Matter National Ambient Air Quality Standards.	Alabama	7/25/2008	4/12/2013, 78 FR 21841	Addressing element 110(a)(2)(D)(i)(II) prong 3 only

EPA APPROVED ALABAMA NON-REGULATORY PROVISIONS—Continued

Name of nonregulatory SIP provision	Applicable geographic or nonattainment area	State submittal date/effective date	EPA approval date	Explanation
110(a)(1) and (2) Infrastructure Requirements for 2006 Fine Particulate Matter National Ambient Air Quality Standards.	Alabama	9/23/2009	4/12/2013, 78 FR 21841	Addressing element 110(a)(2)(D)(i)(II) prong 3 only
2008 Lead Attainment Demonstration for Troy Area.	Troy Area	11/9/2012	1/28/2014, 79 FR 4407.	
110(a)(1) and (2) Infrastructure Requirements for 1997 Fine Particulate Matter National Ambient Air Quality Standards.	Alabama	7/25/2008	5/7/2014, 79 FR 26143	Addressing prong 4 of section 110(a)(2)(D)(i) only.
110(a)(1) and (2) Infrastructure Requirements for 2006 Fine Particulate Matter National Ambient Air Quality Standards.	Alabama	9/23/2009	5/7/2014, 79 FR 26143	Addressing prong 4 of section 110(a)(2)(D)(i) only.
1997 Annual $PM_{2.5}$ Maintenance Plan for the Alabama portion of the Chattanooga TN-GA-AL Area.	Portion of Jackson County in the Chattanooga TN-GA-AL Area.	4/23/2013	12/22/2014, 79 FR 76235.	
110(a)(1) and (2) Infrastructure Requirements for the 2008 Lead NAAQS.	Alabama	11/4/2011	3/18/2015, 80 FR 14019	Addressing the PSD permitting requirements of sections 110(a)(2)(C), 110(a)(2)(D)(i)(II) (prong 3) and 110(a)(2)(J) only.
110(a)(1) and (2) Infrastructure Requirements for the 2008 Ozone NAAQS.	Alabama	8/20/2012	3/18/2015, 80 FR 14019	Addressing the PSD permitting requirements of sections 110(a)(2)(C), 110(a)(2)(D)(i)(II) (prong 3) and 110(a)(2)(J) only.
110(a)(1) and (2) Infrastructure Requirements for the 2010 NO_2 NAAQS.	Alabama	4/23/2013	3/18/2015, 80 FR 14019	Addressing the PSD permitting requirements of sections 110(a)(2)(C), 110(a)(2)(D)(i)(II) (prong 3) and 110(a)(2)(J) only.
Non-interference Demonstration for Federal Low-Reid Vapor Pressure Requirement for the Birmingham Area.	Jefferson and Shelby Counties.	11/14/2014	4/17/2015, 80 FR 21170	
110(a)(1) and (2) Infrastructure Requirements for the 2008 8-Hour Ozone National Ambient Air Quality Standards.	7/17/2012	4/2/2015	4/2/2015, 80 FR 17689	With the exception of PSD permitting requirements for major sources of sections 110(a)(2)(C) and (J); interstate transport requirements of section 110(a)(2)(D)(i)(I) and (II), 110(a)(2)(E)(ii), and the visibility requirements of section 110(a)(2)(J).
Cross State Air Pollution Rule—State-Determined Allowance Allocations for the 2016 control periods.	Alabama	3/27/2014	9/22/2015	

EPA APPROVED ALABAMA NON-REGULATORY PROVISIONS—Continued

Name of nonregulatory SIP provision	Applicable geographic or nonattainment area	State submittal date/effective date	EPA approval date	Explanation
110(a)(1) and (2) Infrastructure Requirements for the 2008 Ozone NAAQS.	Alabama	8/20/2012	8/12/2015, 80 FR 48258	Addressing the visibility requirements of 110(a)(2)(J) only.
110(a)(1) and (2) Infrastructure Requirements for the 2008 Lead National Ambient Air Quality Standards.	Alabama	11/4/2011	10/9/2015, 80 FR 61111	With the exception of provisions pertaining to PSD permitting requirements in sections 110(a)(2)(C), 110(a)(2)(D)(i)(II) (prong 3), 110(a)(2)(J); and section 110(a)(2)(E)(ii).
110(a)(1) and 110(a)(2) Infrastructure Requirements for the 2010 NO_2 NAAQS—Update.	Alabama	12/9/2015	9/22/2016, 81 FR 65286	Addressing Prongs 1 and 2 of Section 110(a)(2)(D)(i)(I) only.
110(a)(1) and (2) Infrastructure Requirements for the 2010 1-hour NO_2 NAAQS.	Alabama	4/23/2013	11/21/2016, 81 FR 83142	With the exception of sections: 110(a)(2)(C) and (J) concerning PSD permitting requirements; 110(a)(2)(D)(i)(I) and (II) (prongs 1 through 4) concerning interstate transport requirements and the state boards of section 110(a)(2)(E)(ii).
110(a)(1) and (2) Infrastructure Requirements for the 2010 1-hour SO_2 NAAQS.	Alabama	4/23/2013	1/12/2017, 82 FR 3637	With the exception of interstate transport requirements of section 110(a)(2)(D)(i)(II) (prong 4), and the state board requirements of section 110(a)(2)(E)(ii).
110(a)(1) and (2) Infrastructure Requirements for the 2012 Annual $PM_{2.5}$ NAAQS.	Alabama	12/9/2015	9/18/2017, 82 FR 43487	With the exception of section 110(a)(2)(D)(i)(I) and (II) (prongs 1, 2 and 4) and the state board requirements of section 110(a)(2)(E)(ii).
110(a)(1) and (2) Infrastructure Requirements for the 2010 1-hour NO_2 NAAQS.	Alabama	12/9/2015	10/12/2017, 82 FR 47393	Addressing Prong 4 of Section 110(a)(2)(D)(i)(I) only.
110(a)(1) and (2) Infrastructure Requirements for the 2010 1-hour SO_2 NAAQS.	Alabama	4/23/2013	10/12/2017, 82 FR 47393	Addressing Prong 4 of Section 110(a)(2)(D)(i)(I) only.
110(a)(1) and (2) Infrastructure Requirements for the 2012 Annual $PM_{2.5}$ NAAQS.	Alabama	12/9/2015	10/12/2017, 82 FR 47393	Addressing Prong 4 of Section 110(a)(2)(D)(i)(I) only.
Regional Haze Plan Revision	Alabama	10/26/2015	10/12/2017, 82 FR 47393.	

[63 FR 70672, Dec. 22, 1998]

EDITORIAL NOTE: For FEDERAL REGISTER citations affecting § 52.50, see the List of CFR Sections Affected, which appears in the Finding Aids section of the printed volume and at *www.fdsys.gov*.

EFFECTIVE DATE NOTE: At 83 FR 28545, June 20, 2018, § 52.50 was amended in paragraph (e) by adding an entry for ''2008 Lead Maintenance Plan for the Troy Area'' at the end of the table, effective July 20, 2018. For the convenience of the user, the added text is set forth as follows:

§ 52.50 Identification of plan.

* * * * *

(e) * * *

EPA APPROVED ALABAMA NON-REGULATORY PROVISIONS

Name of nonregulatory SIP provision	Applicable geographic or nonattainment area	State submittal date/effective date	EPA approval date	Explanation
* *	*	* *	*	*
2008 Lead Maintenance Plan for the Troy Area.	Troy Area	1/3/2018	6/20/2018, 83 FR 28543	

* * * * *

§ 52.51 Classification of regions.

The Alabama plan was evaluated on the basis of the following classifications:

Air quality control region	Pollutant				
	Particulate matter	Sulfur oxides	Nitrogen dioxide	Carbon monoxide	Photochemical oxidants (hydrocarbons)
Alabama & Tombigbee Rivers Intrastate	II	III	III	III	III
Columbus (Georgia)-Phenix City (Alabama) Interstate	I	III	III	III	III
East Alabama Intrastate	I	III	III	III	III
Metropolitan Birmingham Intrastate	I	II	III	I	I
Mobile (Alabama)-Pensacola-Panama City (Florida)-Southern Mississippi Interstate	I	I	III	III	I
Southeast Alabama Intrastate	II	III	III	III	III
Tennessee River Valley (Alabama)-Cumberland Mountains (Tennessee) Interstate	I	I	III	III	III

[37 FR 10847, May 31, 1972]

§ 52.53 Approval status.

With the exceptions set forth in this subpart, the Administrator approves Alabama's plan for the attainment and maintenance of the national standards under section 110 of the Clean Air Act. Furthermore, the Administrator finds that the plan satisfies all requirements of part D, title 1, of the Clean Air Act as amended in 1977.

(a) *Disapproval*. Submittal from the State of Alabama, through the Alabama Department of Environmental Management (ADEM) on August 20, 2012, to address the Clean Air Act (CAA) section 110(a)(2)(E)(ii) for the 2008 8-hour Ozone National Ambient Air Quality Standards concerning state board requirements. EPA is disapproving section 110(a)(2)(E)(ii) of ADEM's submittal because the Alabama SIP lacks provisions respecting state boards per section 128 of the CAA for the 2008 8-hour Ozone National Ambient Air Quality Standards.

(b) *Disapproval*. Submittal from the State of Alabama, through the Alabama Department of Environmental Management (ADEM) on November 4, 2011, to address the Clean Air Act

(CAA) section 110(a)(2)(E)(ii) for the 2008 Lead National Ambient Air Quality Standards concerning state board requirements. EPA is disapproving section 110(a)(2)(E)(ii) of ADEM's submittal because the Alabama SIP lacks provisions respecting state boards per section 128 of the CAA for the 2008 Lead National Ambient Air Quality Standards.

(c) *Disapproval.* Submittal from the State of Alabama, through the Alabama Department of Environmental Management (ADEM) on April 23, 2013, and December 9, 2015, to address the Clean Air Act section 110(a)(2)(E)(ii) for the 2010 1-hour nitrogen dioxide (NO_2) National Ambient Air Quality Standards (NAAQS) concerning state board requirements. EPA is disapproving section 110(a)(2)(E)(ii) of ADEM's submittal because the Alabama SIP lacks provisions respecting state boards per section 128 of the CAA for the 2010 Nitrogen Dioxide National Ambient Air Quality Standards.

(d) *Disapproval.* Submittal from the State of Alabama, through the Alabama Department of Environmental Management (ADEM) on April 23, 2013, to address the Clean Air Act section 110(a)(2)(E)(ii) for the 2010 1-hour sulfur dioxide (SO_2) National Ambient Air Quality Standards (NAAQS) concerning state board requirements. EPA is disapproving section 110(a)(2)(E)(ii) of ADEM's submittal because the Alabama SIP lacks provisions respecting state boards per section 128 of the CAA for the 2010 1-hour SO_2 NAAQS.

(e) [Reserved]

[79 FR 30050, May 27, 2014, as amended at 80 FR 17691, Apr. 2, 2015; 80 FR 61112, Oct. 9, 2015; 81 FR 83144, Nov. 21, 2016; 82 FR 3639, Jan. 12, 2017; 82 FR 9515, Feb. 7, 2017; 82 FR 47396, Oct. 12, 2017]

§ 52.54 Interstate pollutant transport provisions; What are the FIP requirements for decreases in emissions of nitrogen oxides?

(a)(1) The owner and operator of each source and each unit located in the State of Alabama and Indian country within the borders of the State and for which requirements are set forth under the CSAPR NO_X Annual Trading Program in subpart AAAAA of part 97 of this chapter must comply with such requirements. The obligation to comply with such requirements with regard to sources and units in the State will be eliminated by the promulgation of an approval by the Administrator of a revision to Alabama's State Implementation Plan (SIP) as correcting the SIP's deficiency that is the basis for the CSAPR Federal Implementation Plan under § 52.38(a) for those sources and units, except to the extent the Administrator's approval is partial or conditional. The obligation to comply with such requirements with regard to sources and units located in Indian country within the borders of the State will not be eliminated by the promulgation of an approval by the Administrator of a revision to Alabama's SIP.

(2) Notwithstanding the provisions of paragraph (a)(1) of this section, if, at the time of the approval of Alabama's SIP revision described in paragraph (a)(1) of this section, the Administrator has already started recording any allocations of CSAPR NO_X Annual allowances under subpart AAAAA of part 97 of this chapter to units in the State for a control period in any year, the provisions of subpart AAAAA of part 97 of this chapter authorizing the Administrator to complete the allocation and recordation of CSAPR NO_X Annual allowances to units in the State for each such control period shall continue to apply, unless provided otherwise by such approval of the State's SIP revision.

(b)(1) The owner and operator of each source and each unit located in the State of Alabama and Indian country within the borders of the State and for which requirements are set forth under the CSAPR NO_X Ozone Season Group 1 Trading Program in subpart BBBBB of part 97 of this chapter must comply with such requirements with regard to emissions occurring in 2015 and 2016.

(2) The owner and operator of each source and each unit located in the State of Alabama and Indian country within the borders of the State and for which requirements are set forth under the CSAPR NO_X Ozone Season Group 2 Trading Program in subpart EEEEE of part 97 of this chapter must comply with such requirements with regard to emissions occurring in 2017 and each subsequent year. The obligation to

comply with such requirements with regard to sources and units in the State will be eliminated by the promulgation of an approval by the Administrator of a revision to Alabama's State Implementation Plan (SIP) as correcting the SIP's deficiency that is the basis for the CSAPR Federal Implementation Plan (FIP) under § 52.38(b) for those sources and units, except to the extent the Administrator's approval is partial or conditional, provided that because the CSAPR FIP was promulgated as a partial rather than full remedy for an obligation of the State to address interstate air pollution, the SIP revision likewise will constitute a partial rather than full remedy for the State's obligation unless provided otherwise in the Administrator's approval of the SIP revision. The obligation to comply with such requirements with regard to sources and units located in Indian country within the borders of the State will not be eliminated by the promulgation of an approval by the Administrator of a revision to Alabama's SIP.

(3) Notwithstanding the provisions of paragraph (b)(2) of this section, if, at the time of the approval of Alabama's SIP revision described in paragraph (b)(2) of this section, the Administrator has already started recording any allocations of CSAPR NO_X Ozone Season Group 2 allowances under subpart EEEEE of part 97 of this chapter to units in the State for a control period in any year, the provisions of subpart EEEEE of part 97 of this chapter authorizing the Administrator to complete the allocation and recordation of CSAPR NO_X Ozone Season Group 2 allowances to units in the State for each such control period shall continue to apply, unless provided otherwise by such approval of the State's SIP revision.

[76 FR 48361, Aug. 8, 2011, as amended at 80 FR 57275, Sept. 22, 2015; 81 FR 74586 and 74593, Oct. 26, 2016]

§ 52.55 Interstate pollutant transport provisions; What are the FIP requirements for decreases in emissions of sulfur dioxide?

(a) The owner and operator of each source and each unit located in the State of Alabama and Indian country within the borders of the State and for which requirements are set forth under the CSAPR SO_2 Group 2 Trading Program in subpart DDDDD of part 97 of this chapter must comply with such requirements. The obligation to comply with such requirements with regard to sources and units in the State will be eliminated by the promulgation of an approval by the Administrator of a revision to Alabama's State Implementation Plan (SIP) as correcting the SIP's deficiency that is the basis for the CSAPR Federal Implementation Plan under § 52.39 for those sources and units, except to the extent the Administrator's approval is partial or conditional. The obligation to comply with such requirements with regard to sources and units located in Indian country within the borders of the State will not be eliminated by the promulgation of an approval by the Administrator of a revision to Alabama's SIP.

(b) Notwithstanding the provisions of paragraph (a) of this section, if, at the time of the approval of Alabama's SIP revision described in paragraph (a) of this section, the Administrator has already started recording any allocations of CSAPR SO_2 Group 2 allowances under subpart DDDDD of part 97 of this chapter to units in the State for a control period in any year, the provisions of subpart DDDDD of part 97 of this chapter authorizing the Administrator to complete the allocation and recordation of CSAPR SO_2 Group 2 allowances to units in the State for each such control period shall continue to apply, unless provided otherwise by such approval of the State's SIP revision.

[76 FR 48361, Aug. 8, 2011, as amended at 80 FR 57275, Sept. 22, 2015; 81 FR 74586 and 74593, Oct. 26, 2016]

§ 52.56 [Reserved]

§ 52.57 Control strategy: Sulfur oxides.

(a) The requirements of Subpart G of this chapter are not met since the Alabama plan does not provide for attainment and maintenance of the national standards for sulfur oxides in the vicinity of the Widows Creek Power Plant in Jackson County, Alabama. Therefore, Part 5.1, Fuel Combustion, of Chapter 5, Control of Sulfur Compound Emissions, of the rules and regulations of

the State of Alabama, as adopted by the Alabama Air Pollution Control Commission on May 29, 1973, and amended on March 25, 1975, which is part of the revised sulfur oxide control strategy, is disapproved as it applies to the Widows Creek Plant. Part 5.1 of the Alabama rules and regulations as adopted on January 18, 1972, remains the implementation plan regulation applicable to that source.

(b) [Reserved]

[41 FR 42674, Sept. 28, 1976, as amended at 51 FR 40676, Nov. 7, 1986]

§ 52.58 Control strategy: Lead.

The lead plan submitted by the State on March 24, 1982, is disapproved because it fails to provide for the attainment of the lead standard throughout Alabama. The lead plan submitted by the State on October 7, 1985, and November 13, 1986, for Jefferson County is conditionally approved on the condition that the State by October 1, 1987, determine what additional control measures may be necessary, if any, to assure attainment and maintenance as expeditiously as practicable but no later than the applicable attainment deadline and submit those measures to EPA for approval, together with an appropriate demonstration of attainment. The provisions in the regulation submitted on October 7, 1985, that give the Jefferson County Health Officer discretion to vary the requirements of the regulation are approved as limits on that discretion, but any variances that may result from those provisions are not approved in advance and hence change the applicable implementation plan only when approved by EPA on a case-by-case basis.

[49 FR 18738, May 2, 1984, as amended at 52 FR 4291, Feb. 11, 1987]

§ 52.60 Significant deterioration of air quality.

(a) All applications and other information required pursuant to § 52.21 from sources located in the State of Alabama shall be submitted to the State agency, Alabama Department of Environmental Management, P.O. Box 301463, Montgomery, Alabama 36130–1463, rather than to EPA's Region 4 office.(b) On March 24, 1987, the Alabama Department of Environmental Management submitted a letter committing the State of Alabama to require that modeling for PSD permits be done only in accordance with the ''Guideline on Air Quality Models (Revised)'' or other models approved by EPA.

[42 FR 22869, May 5, 1977, as amended at 46 FR 55518, Nov. 10, 1981; 52 FR 48812, Dec. 28, 1987; 74 FR 55143, Oct. 27, 2009]

§ 52.61 [Reserved]

§ 52.62 Control strategy: Sulfur oxides and particulate matter.

In a letter dated May 29, 1987, the Alabama Department of Health and Environmental Control certified that no emission limits in the State's plan are based on dispersion techniques not permitted by EPA's stack height rules. The certification does not apply to: Alabama Electric Cooperative—Lowman Steam Plant; Alabama Power Company-Gorgas Steam Plant, Gaston Steam Plant, Greene County Steam Plant, Gadsden Steam Plant, Miller Steam Plant, and Barry Steam Plant; Alabama River Pulp; Champion International Corporation; Container Corporation of America; Exxon Company's Big Escambia Creek Treating Facility; General Electric's Burkville Plant; International Paper; Scott Paper Company; Tennessee Valley Authority's Colbert, and Widows Creek Steam Plant; Union Camp Corporation; and U.S. Steel.

(a) *Determination of Attaining Data.* EPA has determined, as of September 20, 2010, the Birmingham, Alabama, nonattainment area has attaining data for the 2006 24-hour $PM_{2.5}$ NAAQS. This clean data determination, in accordance with 40 CFR 51.1004(c), suspends the requirements for this area to submit an attainment demonstration, associated reasonably available control measures, a reasonable further progress plan, contingency measures, and other planning SIPs related to attainment of the standard for as long as this area continues to meet the 2006 24-hour $PM_{2.5}$ NAAQS.

(b) *Determination of Attaining Data.* EPA has determined, as of May 31, 2011, the Chattanooga, Tennessee, nonattainment area has attaining data for

the 1997 annual $PM_{2.5}$ NAAQS. This determination, in accordance with 40 CFR 52.1004(c), suspends the requirements for this area to submit an attainment demonstration, associated reasonably available control measures, a reasonable further progress plan, contingency measures, and other planning SIPs related to attainment of the standard for as long as this area continues to meet the 1997 annual $PM_{2.5}$ NAAQS.

(c) *Determination of attaining data.* EPA has determined, as of June 29, 2011, the Birmingham, Alabama, nonattainment area has attaining data for the 1997 annual $PM_{2.5}$ NAAQS. This determination, in accordance with 40 CFR 52.1004(c), suspends the requirements for this area to submit an attainment demonstration, associated reasonably available control measures, a reasonable further progress plan, contingency measures, and other planning SIPs related to attainment of the standard for as long as this area continues to meet the 1997 annual $PM_{2.5}$ NAAQS.

(d) *Disapproval.* EPA is disapproving portions of Alabama's Infrastructure SIP for the 2006 24-hour $PM_{2.5}$ NAAQS addressing interstate transport, specifically with respect to section 110(a)(2)(D)(i)(I).

(e) *Disapproval.* EPA is disapproving portions of Alabama's Infrastructure SIP for the 1997 annual and 2006 24-hour $PM_{2.5}$ NAAQS addressing section 110(a)(2)(E)(ii) that requires the State to comply with section 128 of the CAA.

[55 FR 5846, Feb. 20, 1990, as amended at 75 FR 57187, Sept. 20, 2010; 76 FR 31241, May 31, 2011; 76 FR 38024, June 29, 2011; 76 FR 43136, July 20, 2011; 77 FR 62452, Oct. 15, 2012]

§ 52.63 PM_{10} State Implementation Plan development in group II areas.

On March 15, 1989, the State submitted a committal SIP for the cities of Leeds and North Birmingham in Jefferson County. The committal SIP contains all the requirements identified in the July 1, 1987, promulgation of the SIP requirements for PM_{10} at 52 FR 24681. The SIP commits the State to submit an emissions inventory, continue to monitor for PM_{10}, report data and to submit a full SIP if a violation of the PM_{10} and National Ambient Air Quality Standards is detected.

[56 FR 32514, July 17, 1991]

§ 52.64 Determination of attainment.

Based upon EPA's review of the air quality data for the 3-year period 2007–2009, EPA determined that the Chattanooga, Alabama-Georgia-Tennessee $PM_{2.5}$ nonattainment area attained the 1997 annual $PM_{2.5}$ NAAQS by the applicable attainment date of April 5, 2010. Therefore, EPA has met the requirement pursuant to CAA section 179(c) to determine, based on the Area's air quality as of the attainment date, whether the Area attained the standard. EPA also determined that the Chattanooga, Alabama-Georgia-Tennessee $PM_{2.5}$ nonattainment area is not subject to the consequences of failing to attain pursuant to section 179(d).

[76 FR 55575, Sept. 8, 2011]

§ 52.65 Control Strategy: Nitrogen oxides.

On October 22, 1990, the Alabama Department of Environmental Management submitted a revision to Chapter 2, Control Strategy, by adding subsection 4.2.3. This revision addressed the strategy Alabama is using to implement provisions of the Prevention of Significant Deterioration regulations for nitrogen oxides.

[57 FR 24370, June 9, 1992]

§ 52.66 [Reserved]

§ 52.69 Original identification of plan section.

(a) This section identified the original ''Air Implementation Plan for the State of Alabama'' and all revisions submitted by Alabama that were federally approved prior to December 1, 1998. The information in this section is available in the 40 CFR, part 52 edition revised as of July 1, 1999, the 40 CFR, part 52, Volume 1 of 2 (§§ 52.01 to 52.1018) editions revised as of July 1, 2000 through July 1, 2011, and the 40 CFR, part 52, Volume 1 of 3 (§§ 52.01 to 52.1018) editions revised as of July 1, 2012.

(b)–(c) [Reserved]

[79 FR 30050, May 27, 2014]

Subpart C—Alaska

§ 52.70 Identification of plan.

(a) *Purpose and scope.* This section sets forth the applicable State implementation plan for the State of Alaska under section 110 of the Clean Air Act, 42 U.S.C. 7401–7671q and 40 CFR part 51 to meet national ambient air quality standards.

(b) *Incorporation by reference.* (1) Material listed in paragraphs (c) and (d) of this section with an EPA approval date prior to September 8, 2017, was approved for incorporation by reference by the Director of the FEDERAL REGISTER in accordance with 5 U.S.C. 552(a) and 1 CFR part 51. Material is incorporated as it exists on the date of the approval, and notice of any change in the material will be published in the FEDERAL REGISTER. Entries in paragraphs (c) and (d) of this section with EPA approval dates after September 8, 2017, will be incorporated by reference in the next update to the SIP compilation.

(2) The EPA Region 10 certifies that the rules and regulations provided by the EPA in the SIP compilation at the addresses in paragraph (b)(3) of this section are an exact duplicate of the officially promulgated State rules/regulations which have been approved as part of the State Implementation Plan as of September 8, 2017.

(3) Copies of the materials incorporated by reference may be inspected at the EPA Region 10 Office at 1200 Sixth Avenue, Seattle WA, 98101; or the National Archives and Records Administration (NARA). For information on the availability of this material at NARA, call (202) 741–6030, or go to: *https://www.archives.gov/federal-register/cfr/ibr-locations.html.*

(c) *EPA approved regulations.*

EPA-APPROVED ALASKA REGULATIONS AND STATUTES

State citation	Title/subject	State effective date	EPA approval date	Explanations
Alaska Administrative Code Title 18 Environmental Conservation, Chapter 50—Air Quality Control (18 AAC 50)				
18 AAC 50—Article 1. Ambient Air Quality Management				
18 AAC 50.005	Purpose and Applicability of Chapter	10/1/2004	8/14/2007, 72 FR 45378.	
18 AAC 50.007	Local Government Powers or Obligations Under a Local Air Quality Control Program.	2/28/2015	9/8/2017, 82 FR 42457.	
18 AAC 50.010	Ambient Air Quality Standards	8/20/2016	8/28/2017, 82 FR 40712	Except (8).
18 AAC 50.015	Air Quality Designations, Classifications, and Control Regions.	4/17/2015	5/19/2016, 81 FR 31511.	
18 AAC 50.020	Baseline Dates and Maximum Allowable Increases.	8/20/2016	8/28/2017, 82 FR 40712.	
18 AAC 50.025	Visibility and Other Special Protection Areas.	11/26/2016	9/8/2017, 82 FR 42457.	
18 AAC 50.035	Documents, Procedures and Methods Adopted by Reference.	8/20/2016	8/28/2017, 82 FR 40712	Except (a)(6) and (b)(4).
18 AAC 50.040	Federal Standards Adopted by Reference.	8/20/2016; 11/9/2014	8/28/2017, 82 FR 40712; 1/7/2015, 80 FR 832.	Except (a), (b), (c), (d), (e), (g), (j) and (k).
18 AAC 50.045	Prohibitions	10/1/2004	8/14/2007, 72 FR 45378.	
18 AAC 50.050	Incinerator Emission Standards	7/25/2008	9/19/2014, 79 FR 56268.	
18 AAC 50.055	Industrial Processes and Fuel-Burning Equipment.	8/20/2016	8/28/2017, 82 FR 40712	Except (d)(2)(B).
18 AAC 50.065	Open Burning	3/2/2016	9/8/2017, 82 FR 42457.	
18 AAC 50.070	Marine Vessel Visible Emission Standards.	6/21/1998	8/14/2007, 72 FR 45378.	
18 AAC 50.075	Solid Fuel-Fired Heating Device Visible Emission Standards.	11/26/2016	9/8/2017, 82 FR 42457	Except (d)(2).
18 AAC 50.076	Solid Fuel-Fired Heating Device Fuel Requirements; Registration of Commercial Wood Sellers.	11/26/2016	9/8/2017, 82 FR 42457	Except (g)(11).
18 AAC 50.077	Standards for Wood-Fired Heating Devices.	11/26/2016	9/8/2017, 82 FR 42457	Except (h).
18 AAC 50.080	Ice Fog Standards	1/18/1997	8/14/2007, 72 FR 45378.	
18 AAC 50.100	Nonroad Engines	10/1/2004	8/14/2007, 72 FR 45378.	

EPA-APPROVED ALASKA REGULATIONS AND STATUTES—Continued

State citation	Title/subject	State effective date	EPA approval date	Explanations
18 AAC 50.110 ..	Air Pollution Prohibited	5/26/1972	5/31/1972, 37 FR 10842.	
18 AAC 50—Article 2. Program Administration				
18 AAC 50.200 ..	Information Requests	10/1/2004	8/14/2007, 72 FR 45378.	
18 AAC 50.201 ..	Ambient Air Quality Investigation	10/1/2004	8/14/2007, 72 FR 45378.	
18 AAC 50.205 ..	Certification	10/1/2004	8/14/2007, 72 FR 45378.	
18 AAC 50.215 ..	Ambient Air Quality Analysis Methods	8/20/2016	8/28/2017, 82 FR 40712 ...	Except (a)(4).
18 AAC 50.220 ..	Enforceable Test Methods	9/14/2012	9/19/2014, 79 FR 56268 ...	Except (c)(1)(A), (B), (C), and (c)(2).
18 AAC 50.225 ..	Owner-Requested Limits	10/6/2013	5/27/2015, 80 FR 30161.	
18 AAC 50.230 ..	Preapproved Emission Limits	9/26/2015; 1/29/2005	11/25/2016, 81 FR 85160; 8/14/2007, 72 FR 45378.	Except (d).
18 AAC 50.240 ..	Excess Emissions	1/18/1997	11/18/1998, 63 FR 63983.	
18 AAC 50.245 ..	Air Quality Episodes and Advisories for Air Pollutants Other than $PM_{2.5}$.	2/28/2015	9/8/2017, 82 FR 42457.	
18 AAC 50.246 ..	Air Quality Episodes and Advisories for $PM_{2.5}$.	2/28/2015	9/8/2017, 82 FR 42457.	
18 AAC 50.250 ..	Procedures and Criteria for Revising Air Quality Classifications.	10/1/2004	8/14/2007, 72 FR 45378.	
18 AAC 50.260 ..	Guidelines for Best Available Retrofit Technology under the Regional Haze Rule.	9/26/2015; 10/6/2013	11/25/2016, 81 FR 85160; 5/27/2015, 80 FR 30161.	
18 AAC 50—Article 3. Major Stationary Source Permits				
18 AAC 50.301 ..	Permit Continuity	10/1/2004	8/14/2007, 72 FR 45378.	
18 AAC 50.302 ..	Construction Permits	9/14/2012	9/19/2014, 79 FR 56268 ...	Except (a)(3).
18 AAC 50.306 ..	Prevention of Significant Deterioration (PSD) Permits.	1/4/2013	9/19/2014, 79 FR 56268.	
18 AAC 50.311 ..	Nonattainment Area Major Stationary Source Permits.	10/1/2004	8/14/2007, 72 FR 45378.	
18 AAC 50.345 ..	Construction, Minor and Operating Permits: Standard Permit Conditions.	8/20/2016	8/28/2017, 82 FR 40712 ...	Except (b), (c)(3), and (l).
18 AAC 50—Article 4. User Fees				
18 AAC 50.400 ..	Permit Administration Fees	9/26/2015	11/25/2016, 81 FR 85160	Except (a), (b), (c), and (i).
18 AAC 50—Article 5. Minor Permits				
18 AAC 50.502 ..	Minor Permits for Air Quality Protection	8/20/2016	8/28/2017, 82 FR 40712.	
18 AAC 50.508 ..	Minor Permits Requested by the Owner or Operator.	12/9/2010	9/19/2014, 79 FR 56268.	
18 AAC 50.510 ..	Minor Permit—Title V Permit Interface	12/9/2010	9/19/2014, 79 FR 56268.	
18 AAC 50.540 ..	Minor Permit: Application	8/20/2016	8/28/2017, 82 FR 40712.	
18 AAC 50.542 ..	Minor Permit: Review and Issuance	8/20/2016	8/28/2017, 82 FR 40712 ...	Except (b)(2).
18 AAC 50.544 ..	Minor Permits: Content	12/9/2010	9/19/2014, 79 FR 56268.	
18 AAC 50.546 ..	Minor Permits: Revisions	7/15/2008	9/19/2014, 79 FR 56268 ...	Except (b).
18 AAC 50.560 ..	General Minor Permits	10/1/2004	8/14/2007, 72 FR 45378.	
18 AAC 50—Article 7. Transportation Conformity				
18 AAC 50.700 ..	Purpose	4/17/2015	9/8/2015; 80 FR 53735.	
18 AAC 50.705 ..	Applicability	4/17/2015	9/8/2015; 80 FR 53735.	
18 AAC 50.712 ..	Agency Responsibilities	4/17/2015	9/8/2015; 80 FR 53735.	
18 AAC 50.715 ..	Interagency Consultation Procedures ...	3/2/2016	8/28/2017, 82 FR 40712.	
18 AAC 50.720 ..	Public Involvement	3/2/2016	8/28/2017, 82 FR 40712.	
18 AAC 50.740 ..	Written Comments	4/17/2015	9/8/2015, 80 FR 53735.	
18 AAC 50.745 ..	Resolving Conflicts	4/17/2015	9/8/2015, 80 FR 53735.	
18 AAC 50.750 ..	Exempt Projects	4/17/2015	9/8/2015, 80 FR 53735.	
18 AAC 50—Article 9. General Provisions				
18 AAC 50.900 ..	Small Business Assistance Program	10/1/2004	8/14/2007, 72 FR 45378.	
18 AAC 50.990 ..	Definitions	3/2/2016	9/8/2017, 82 FR 42457.	

EPA-APPROVED ALASKA REGULATIONS AND STATUTES—Continued

State citation	Title/subject	State effective date	EPA approval date	Explanations
Alaska Administrative Code Title 18 Environmental Conservation, Chapter 52—Emissions Inspection and Maintenance Requirements (18 AAC 52)				
18 AAC 52—Article 1. Emissions Inspection and Maintenance Requirements				
18 AAC 52.005 ..	Applicability and General Requirements	5/17/2008	3/22/2010, 75 FR 13436.	
18 AAC 52.007 ..	Suspension and Reestablishment of I/M Requirements.	5/17/2008	3/22/2010, 75 FR 13436.	
18 AAC 52.010 ..	I/M Program Administration Office	2/18/2006	3/22/2010, 75 FR 13436.	
18 AAC 52.015 ..	Motor Vehicle Maintenance Requirements.	2/18/2006	3/22/2010, 75 FR 13436.	
18 AAC 52.020 ..	Certificate of Inspection Requirements	2/18/2006	3/22/2010, 75 FR 13436.	
18 AAC 52.025 ..	Visual Identification of Certificate of Inspection, Waivers, and Exempt Vehicles.	2/18/2006	3/22/2010, 75 FR 13436.	
18 AAC 52.030 ..	Department-Administered I/M Program	2/1/1994	4/5/1995, 60 FR 17232.	
18 AAC 52.035 ..	I/M Program Administered by an Implementing Agency.	3/27/2002	3/22/2010, 75 FR 13436.	
18 AAC 52.037 ..	Reporting Requirements for an I/M Program Administered by an Implementing Agency.	2/18/2006	3/22/2010, 75 FR 13436.	
18 AAC 52.040 ..	Centralized Inspection Program	2/1/1994	4/5/1995, 60 FR 17232.	
18 AAC 52.045 ..	Decentralized Inspection Program	2/1/1994	4/5/1995, 60 FR 17232.	
18 AAC 52.050 ..	Emissions Standards	3/27/2002	3/22/2010, 75 FR 13436.	
18 AAC 52.055 ..	Alternative Requirements, Standards and Test Procedures.	1/1/2000	1/8/2002, 67 FR 822.	
18 AAC 52.060 ..	Waivers	5/17/2008	3/22/2010, 75 FR 13436.	
18 AAC 52.065 ..	Emissions-Related Repair Cost Minimum.	1/1/2000	1/8/2002, 67 FR 822.	
18 AAC 52.070 ..	Referee Facility	3/27/2002	3/22/2010, 75 FR 13436.	
18 AAC 52.075 ..	Kit Cars and Custom-Manufactured Vehicles.	2/1/1994	4/5/1995, 60 FR 17232.	
18 AAC 52.080 ..	Grey Market Vehicles	3/27/2002	3/22/2010, 75 FR 13436.	
18 AAC 52.085 ..	Vehicle Modifications	2/18/2006	3/22/2010, 75 FR 13436.	
18 AAC 52.090 ..	Repair of Nonconforming Vehicles	1/1/1998	12/29/1999, 64 FR 72940.	
18 AAC 52.095 ..	Minimum Certification Requirements	1/1/1998	12/29/1999, 64 FR 72940.	
18 AAC 52.100 ..	Enforcement Procedures for Violations by Motorists.	12/14/2006	3/22/2010, 75 FR 13436.	
18 AAC 52.105 ..	Enforcement Procedures for Violations by Certified Mechanics or Stations.	1/1/2000	1/8/2002, 67 FR 822.	
18 AAC 52—Article 4. Certification Requirements				
18 AAC 52.400 ..	Mechanic Certification	1/1/1998	12/29/1999, 64 FR 72940.	
18 AAC 52.405 ..	Certified Mechanic Examinations	3/27/2002	3/22/2010, 75 FR 13436.	
18 AAC 52.410 ..	Training Course Certification	2/18/2006	3/22/2010, 75 FR 13436.	
18 AAC 52.415 ..	I/M Station Certification	1/1/2000	1/8/2002, 67 FR 822.	
18 AAC 52.420 ..	Equipment Certification	1/1/2000	1/8/2002, 67 FR 822.	
18 AAC 52.425 ..	Renewal of Certification	1/1/1998	12/29/1999, 64 FR 72940.	
18 AAC 52.430 ..	Duty to Report Change in Status	2/1/1994	4/5/1995, 60 FR 17232.	
18 AAC 52.440 ..	Monitoring of Certified Mechanics and Stations.	1/1/2000	1/8/2002, 67 FR 822.	
18 AAC 52.445 ..	Suspension or Revocation of Certification.	2/1/1994	4/5/1995, 60 FR 17232.	
18 AAC 52—Article 5. Certified Station Requirements				
18 AAC 52.500 ..	General Operating Requirements	1/1/2000	1/8/2002, 67 FR 822.	
18 AAC 52.505 ..	Display of Certified Station Sign	2/1/1994	4/5/1995, 60 FR 17232.	
18 AAC 52.510 ..	Display of Certificates	2/18/2006	3/22/2010, 75 FR 13436.	
18 AAC 52.515 ..	Inspection Charges	2/18/2006	3/22/2010, 75 FR 13436.	
18 AAC 52.520 ..	Required Tools and Equipment	2/18/2006	3/22/2010, 75 FR 13436.	
18 AAC 52.525 ..	Remote Station Operation	1/1/2000	1/8/2002, 67 FR 822.	
18 AAC 52.527 ..	Prescreening Prohibited	1/1/2000	1/8/2002, 67 FR 822.	
18 AAC 52.530 ..	Preliminary Inspection	1/1/2000	1/8/2002, 67 FR 822.	
18 AAC 52.535 ..	Test Abort Conditions	3/27/2002	3/22/2010, 75 FR 13436.	
18 AAC 52.540 ..	Official I/M Testing	3/27/2002	3/22/2010, 75 FR 13436.	
18 AAC 52.545 ..	Parts on Order	1/1/1998	12/29/1999, 64 FR 72940.	
18 AAC 52.546 ..	Unavailable Parts	1/1/1998	12/29/1999, 64 FR 72940.	
18 AAC 52.550 ..	Recordkeeping Requirements	2/1/1994	4/5/1995, 60 FR 17232.	

EPA-APPROVED ALASKA REGULATIONS AND STATUTES—Continued

State citation	Title/subject	State effective date	EPA approval date	Explanations
18 AAC 52—Article 9. General Provisions				
18 AAC 52.990 ..	Definitions	2/18/2006	3/22/2010, 75 FR 13436.	
Alaska Administrative Code Title 18 Environmental Conservation, Chapter 53—Fuel Requirements for Motor Vehicles (18 AAC 53)				
18 AAC 53—Article 1. Oxygenated Gasoline Requirements				
18 AAC 53.005 ..	Purpose and Applicability; General Requirements.	10/31/1997	12/29/1999, 64 FR 72940.	
18 AAC 53.007 ..	Dispenser Labeling	10/31/1997	12/29/1999, 64 FR 72940.	
18 AAC 53.010 ..	Control Periods and Control Areas	2/20/2004	6/23/2004, 69 FR 34935.	
18 AAC 53.020 ..	Required Oxygen Content	10/31/1997	12/29/1999, 64 FR 72940.	
18 AAC 53.030 ..	Sampling, Testing and Oxygen Content Calculations.	10/31/1997	12/29/1999, 64 FR 72940.	
18 AAC 53.035 ..	Per Gallon Method of Compliance	10/31/1997	12/29/1999, 64 FR 72940.	
18 AAC 53.040 ..	Averaging Oxygen Content Method of Compliance.	10/31/1997	12/29/1999, 64 FR 72940.	
18 AAC 53.045 ..	Oxygen Credits and Debits	10/31/1997	12/29/1999, 64 FR 72940.	
18 AAC 53.060 ..	Oxygenated Gasoline Blending	10/31/1997	12/29/1999, 64 FR 72940.	
18 AAC 53.070 ..	Registration and Permit	10/31/1997	12/29/1999, 64 FR 72940.	
18 AAC 53.080 ..	Car Fees	12/30/2000	1/08/2002, 67 FR 822.	
18 AAC 53.090 ..	Recordkeeping	10/31/1997	12/29/1999, 64 FR 72940.	
18 AAC 53.100 ..	Reporting	10/31/1997	12/29/1999, 64 FR 72940.	
18 AAC 53.105 ..	Product Transfer Document	10/31/1997	12/29/1999, 64 FR 72940.	
18 AAC 53.120 ..	Inspection and Sampling	10/31/1997	12/29/1999, 64 FR 72940.	
18 AAC 53.130 ..	Liability for Violation	10/31/1997	12/29/1999, 64 FR 72940.	
18 AAC 53.140 ..	Defenses for Violation	10/31/1997	12/29/1999, 64 FR 72940.	
18 AAC 53.150 ..	Temporary Variances	10/31/1997	12/29/1999, 64 FR 72940.	
18 AAC 53.160 ..	Quality Assurance Program	10/31/1997	12/29/1999, 64 FR 72940.	
18 AAC 53.170 ..	Attest Engagements	10/31/1997	12/29/1999, 64 FR 72940.	
18 AAC 53.190 ..	Suspension and Reestablishment of Control Period.	2/20/2004	6/23/2004, 69 FR 34935.	
18 AAC 53—Article 9. General Provisions				
18 AAC 53.990 ..	Definitions	10/31/1997	12/29/1999, 64 FR 72940.	
Alaska Statutes				
Title 45 Trade and Commerce, Chapter 45.45. Trade Practices				
Sec. 45.45.400 ...	Prohibited Transfer of Used Cars	6/25/1993	11/18/1998, 63 FR 63983	Except (b).
Title 46 Water, Air, Energy, and Environmental Conservation, Chapter 46.14—Air Quality Control				
Sec. 46.14.550 ...	Responsibilities of Owner and Operator; Agent for Service.	1/4/2013	9/19/2014, 79 FR 56268.	
Sec. 46.14.560 ...	Unavoidable Malfunctions and Emergencies.	6/25/1993	11/18/1998, 63 FR 63983.	
Sec. 46.14.990 ...	Definitions	1/4/2013	9/19/2014, 79 FR 56268 ...	Except (1) through (3), (6), (7), (9) through (14), (19) through (26), and (28).
City and Borough Codes and Ordinances				
Anchorage Municipal Code 21.85.030.	Improvement Requirements by Improvement Area.	1/16/1987 (city effective date)	8/13/1993, 58 FR 43084 ...	Eagle River PM Plan—Contingency Plan.
Anchorage Municipal Code 21.45.080.W.7.	Paving	9/24/1991 (city effective date)	8/13/1993, 58 FR 43084 ...	Section W.7. Eagle River PM Plan—Contingency Plan.
Fairbanks North Star Borough Ordinance No. 2001–17.	Mandating a Fairbanks North Star Borough Motor Vehicle Plug-in Program.	4/12/2001 (borough adoption date)	2/4/2002, 67 FR 5064	Fairbanks Transportation Control Program—Carbon Monoxide.

EPA-APPROVED ALASKA REGULATIONS AND STATUTES—Continued

State citation	Title/subject	State effective date	EPA approval date	Explanations
Fairbanks North Star Borough Ordinance No. 2003–71.	An Ordinance amending the Carbon Monoxide Emergency Episode Prevention Plan including implementing a Woodstove Control Ordinance.	10/30/2003 (borough adoption date)	7/27/2004, 69 FR 44601 ...	Fairbanks Carbon Monoxide Maintenance Plan.
Ordinance of the City and Borough of Juneau, No. 91–52.	An Ordinance amending the Wood smoke control code to lower the particulate count threshold, and to prohibit the burning in woodstoves of substances other than paper, cardboard and untreated wood.	1/6/1992 (city adoption date)	3/24/1994, 59 FR 13884 ...	Mendenhall Valley PM Plan.
Ordinance of the City and Borough of Juneau, No. 91–53.	An Ordinance amending the wood smoke control fine schedule to increase the fines for violations of the wood smoke control code.	1/6/1992 (city adoption date)	3/24/1994, 59 FR 13884 ...	Mendenhall Valley PM Plan.
Ordinance of the City and Borough of Juneau No. 93–01.	Setting boundaries for regrading and surfacing.	2/8/1993 (city adoption date)	3/24/1994, 59 FR 13884 ...	Mendenhall Valley PM Plan.
Ordinance of the City and Borough of Juneau, No. 93–06.	Setting boundaries for regrading and surfacing.	4/5/1993 (city adoption date)	3/24/1994, 59 FR 13884 ...	Mendenhall Valley PM Plan.
Ordinance of the City and Borough of Juneau, No. 93–39am.	An Ordinance creating Local Improvement District No. 77 of the City and Borough, setting boundaries for drainage and paving of streets in the Mendenhall Valley.	11/17/1993 (city adoption date)	3/24/1994, 59 FR 13884 ...	Mendenhall Valley PM Plan.
Anchorage Ordinance 2006–13.	An ordinance amending the Anchorage Municipal Code, Chapters 15.80 and 15.85 to comply with State I/M regulations and to comply with DMV Electronic Procedures.	2/14/2006 (city approval date)	3/22/2010, 75 FR 13436 ...	Anchorage Transportation Control Program—Carbon Monoxide.
Ordinance of the City and Borough of Juneau, Serial No. 2008–28.	An Ordinance Amending the Woodsmoke Control Program Regarding Solid Fuel-Fired Burning Devices.	9/8/2008 (city adoption date)	5/9/2013, 78 FR 27071	Mendenhall Valley PM Limited Maintenance Plan.
Fairbanks North Star Borough Code				
Chapter 21.28—PM 2.5 Air Quality Control Program				
21.28.010	Definitions	3/2/2015 (borough effective date)	9/8/2017, 82 FR 42457.	
21.28.020	Borough listed appliances	1/15/2016 (borough effective date)	9/8/2017, 82 FR 42457.	
21.28.030	Prohibited acts	10/1/2016 (borough effective date)	9/8/2017, 82 FR 42457	except H and J.
21.28.050	Forecasting exceedances and restrictions in the air quality control zone during an alert.	6/26/2015 (borough effective date)	9/8/2017, 82 FR 42457.	
21.28.060	No other adequate source of heat determination.	8/12/2016 (borough effective date)	9/8/2017, 82 FR 42457	

(d) *EPA approved state source-specific requirements.*

EPA-APPROVED ALASKA SOURCE-SPECIFIC REQUIREMENTS

Name of source	Order/permit number	State effective date	EPA approval date	Explanations
None.				

(e) *EPA approved nonregulatory provisions and quasi-regulatory measures.*

EPA-APPROVED ALASKA NONREGULATORY PROVISIONS AND QUASI-REGULATORY MEASURES

Name of SIP provision	Applicable geographic or nonattainment area	State submittal date	EPA approval date	Explanations
State of Alaska Air Quality Control Plan: Volume II. Analysis of Problems, Control Actions				
Section I. Background				
II.I.A. Introduction	Statewide	1/8/1997	12/29/1999, 64 FR 72940.	
II.I.B. Air Quality Control Regions	Statewide	1/8/1997	12/29/1999, 64 FR 72940.	
II.I.C. Attainment/nonattainment Designations.	Statewide	1/8/1997	12/29/1999, 64 FR 72940.	
II.I.D. Prevention of Significant Deterioration Designations.	Statewide	1/8/1997	12/29/1999, 64 FR 72940.	
II.I.E. New Source Review	Statewide	1/8/1997	12/29/1999, 64 FR 72940.	
Section II. State Air Quality Control Program				
II.II. State Air Quality Control Program.	Statewide	7/9/2012	10/22/2012, 77 FR 64425.	
Section III. Areawide Pollutant Control Program				
II.III.A. Statewide Carbon Monoxide Control Program.	Statewide	6/5/2008	3/22/2010, 75 FR 13436.	
II.III.B. Anchorage Transportation Control Program.	Anchorage	1/4/2002	9/18/2002, 67 FR 58711.	
II.III.B.11. Anchorage Carbon Monoxide Maintenance Plan.	Anchorage	9/20/2011	3/3/2014, 79 FR 11707.	
II.III.B.12. Anchorage Second 10-year Carbon Monoxide Limited Maintenance Plan.	Anchorage	4/22/2013	3/3/2014, 79 FR 11707.	
II.III.C. Fairbanks Transportation Control Program.	Fairbanks	8/30/2001	2/4/2002, 67 FR 5064.	
II.III.C.11. Fairbanks Carbon Monoxide Redesignation and Maintenance Plan.	Fairbanks	9/15/2009	3/22/2010, 75 FR 13436.	
II.III.C.12. Fairbanks Second 10-year Carbon Monoxide Limited Maintenance Plan.	Fairbanks	4/22/2013	8/9/2013, 78 FR 48611.	
II.III.D. Particulate Matter	Statewide	10/15/1991	8/13/1993, 58 FR 43084.	
II.III.D.2. Eagle River PM_{10} Control Plan.	Eagle River	10/15/1991	8/13/1993, 58 FR 43084.	
II.III.D.2.a. Eagle River PM_{10} Limited Maintenance Plan.	Eagle River	9/29/2010	1/7/2013, 78 FR 900.	
II.III.D.3. Mendenhall Valley PM_{10} Control Plan.	Mendenhall Valley.	6/22/1993	3/24/1994, 59 FR 13884.	
II.III.D.3.a. Mendenhall Valley PM_{10} Limited Maintenance Plan.	Mendenhall Valley.	5/14/2009	5/9/2013, 78 FR 27071.	
II.III.D.4. Interstate Transport of Particulate Matter.	Statewide	2/7/2008	10/15/2008, 73 FR 60957.	
II.III.D.5. Fairbanks North Star Borough $PM_{2.5}$ Control Plan.	Fairbanks North Star Borough.	11/23/2016	9/8/2017, 82 FR 42457	Fairbanks North Star Borough $PM_{2.5}$ Moderate Area Plan.
II.III.E. Ice Fog	Statewide	1/18/1980	7/5/1983, 48 FR 30623.	
II.III.F. Open Burning	Statewide	4/4/2011	2/14/2013, 78 FR 10546.	
II.III.F.1. In Situ Burning Guidelines for Alaska.	Statewide	4/4/2011	2/14/2013, 78 FR 10546	Revision 1, August 2008.
II.III.G. Wood Smoke Pollution Control.	Statewide	11/15/1983	4/24/1984, 49 FR 17497.	
II.III.H. Lead Pollution Control	Statewide	11/15/1983	1/3/1984, 49 FR 67.	
II.III.I. Transportation Conformity	Statewide	4/17/2015	9/8/2015, 80 FR 53735.	
II.III.I.1. Transportation Conformity Supplement.	Statewide	7/29/2015	9/8/2015, 80 FR 53735	Clarification re: access to public records: AS 40.25.110, AS 40.25.115, and 2 AAC 96.
II.III.J. General Conformity	Statewide	12/05/1994	9/27/1995, 60 FR 49765.	
II.III.K. Area Wide Pollutant Control Program for Regional Haze.	Statewide	3/10/2016	4/12/2018, 83 FR 15746.	
Section IV. Point Source Control Program				
II.IV.A. Summary	Statewide	11/15/1983	4/24/1984, 49 FR 17497.	

EPA-APPROVED ALASKA NONREGULATORY PROVISIONS AND QUASI-REGULATORY MEASURES—Continued

Name of SIP provision	Applicable geographic or nonattainment area	State submittal date	EPA approval date	Explanations
II.IV.B. State Air Quality Regulations	Statewide	11/15/1983	4/24/1984, 49 FR 17497.	
II.IV.C. Local Programs	Statewide	11/15/1983	4/24/1984, 49 FR 17497.	
II.IV.D. Description of Source Categories and Pollutants.	Statewide	11/15/1983	4/24/1984, 49 FR 17497.	
II.IV.E. Point Source Control	Statewide	11/15/1983	4/24/1984, 49 FR 17497.	
II.IV.F. Facility Review Procedures	Statewide	9/12/1988	7/31/1989, 54 FR 31522.	
II.IV.G. Application Review and Permit Development.	Statewide	11/15/1983	4/24/1984, 49 FR 17497.	
II.IV.H. Permit Issuance Requirements.	Statewide	11/15/1983	4/24/1984, 49 FR 17497.	
Section V. Ambient Air Monitoring				
II.V.A. Purpose	Statewide	1/18/1980	4/15/1981, 46 FR 21994.	
II.V.B. Completed Air Monitoring Projects.	Statewide	1/18/1980	4/15/1981, 46 FR 21994.	
II.V.C. Air Monitoring Network	Statewide	1/18/1980; 7/11/1994	4/15/1981, 46 FR 21994; 4/5/1995, 60 FR 17237.	
II.V.E. Annual Review	Statewide	1/18/1980	4/15/1981, 46 FR 21994.	
State of Alaska Air Quality Control Plan: Volume III. Appendices				
Section II. State Air Quality Control Program				
III.II.A. State Air Statutes	Statewide	12/11/2006	3/22/2010, 75 FR 13436	Except 46.03.170.
III.II.A.1. State Attorney General Opinions on Legal Authority.	Statewide	12/11/2006	3/22/2010, 75 FR 13436.	
III.II.B. Municipality of Anchorage and ADEC Agreements.	Anchorage	4/22/2013	3/3/2014, 79 FR 11707.	
III.II.C. Fairbanks North Star Borough and ADEC Agreements.	Fairbanks	12/11/2006	3/22/2010, 75 FR 13436.	
III.II.D. CAA Section 110 Infrastructure Certification Documentation and Supporting Documents.	Statewide	5/12/2015	5/12/2017, 82 FR 22081.	
III.II.D.1. Attachment 1—Public Official Financial Disclosure (2 AAC 50.010 through 2 AAC 50.200).	Statewide	7/9/2012	10/22/2012, 77 FR 64425	Approves for purposes of CAA section 128.
III.II.D.2. Attachment 2—Executive Branch Code of Ethics (9 AAC 52.010 through 9 AAC 52.990).	Statewide	7/9/2012	10/22/2012, 77 FR 64425	Approves for purposes of CAA section 128.
Section III. Areawide Pollutant Control Program				
III.III.A. I/M Program Manual	Statewide	6/5/2008	3/22/2010, 75 FR 13436.	
III.III.B. Municipality of Anchorage	Anchorage	4/22/2013	3/3/2014, 79 FR 11707.	
III.III.C. Fairbanks	Fairbanks	4/22/2013	8/9/2013, 78 FR 48611.	
III.III.D. Particulate Matter	Statewide	10/15/1991	8/13/1993, 58 FR 43084.	
III.III.D.2. Eagle River PM_{10} Control Plan.	Eagle River	9/29/2010	1/7/2013, 78 FR 900.	
III.III.D.3. Control Plan for the Mendenhall Valley of Juneau.	Mendenhall Valley.	5/14/2009	5/9/2013, 78 FR 27071.	
III.III.D.5. Fairbanks North Star Borough $PM_{2.5}$ Control Plan.	Fairbanks North Star Borough.	11/23/2016	9/8/2017, 82 FR 42457	Only with respect to the Fairbanks North Star Borough $PM_{2.5}$ Moderate Area Plan.
III.III.G. Ordinance of the City and Borough of Juneau.	Juneau	11/15/1983	4/24/1984, 49 FR 17497.	
III.III.H. Support Documents for Lead Plan.	Statewide	11/15/1983	1/3/1984, 49 FR 67.	
II.III.K. Area Wide Pollutant Control Program for Regional Haze.	Statewide	3/10/2016	4/12/2018, 83 FR 15746.	
Section IV. Point Source Control Program				
III.IV. Point Source Control Program	Statewide	11/15/1983	4/24/1984, 49 FR 17497.	
III.IV.1. PSD Area Classification and Reclassification.	Statewide	11/15/1983	4/24/1984, 49 FR 17497.	
III.IV.2. Compliance Assurance	Statewide	11/15/1983	4/24/1984, 49 FR 17497.	

EPA-APPROVED ALASKA NONREGULATORY PROVISIONS AND QUASI-REGULATORY MEASURES—Continued

Name of SIP provision	Applicable geographic or nonattainment area	State submittal date	EPA approval date	Explanations
III.IV.3. Testing Procedures	Statewide	11/15/1983	4/24/1984, 49 FR 17497.	
Section V. Ambient Air Monitoring				
III.V. Ambient Air Monitoring	Statewide	11/15/1983	4/24/1984, 49 FR 17497.	
Section VI. Small Business Assistance Program				
III.VI. Small Business Assistance Program.	Statewide	4/18/1994	9/5/1995, 60 FR 46024.	
Infrastructure and Interstate Transport				
Interstate Transport Requirements—1997 Ozone and 1997 $PM_{2.5}$ NAAQS.	Statewide	2/7/2008	10/15/2008, 73 FR 60957	Approves SIP for purposes of CAA section 110(a)(2)(D)(i) for the 1997 Ozone and 1997 $PM_{2.5}$ NAAQS.
Infrastructure Requirements—1997 Ozone NAAQS.	Statewide	7/9/2012	10/22/2012, 77 FR 64425	Approves SIP for purposes of CAA sections 110(a)(2)(A), (B), (C), (D)(ii), (E), (F), (G), (H), (J), (K), (L), and (M) for the 1997 Ozone NAAQS.
Interstate Transport Requirements—2008 Ozone and 2006 $PM_{2.5}$ NAAQS.	Statewide	3/29/2011	8/4/2014, 79 FR 45103	Approves SIP for purposes of CAA section 110(a)(2)(D)(i)(I) for the 2008 Ozone and 2006 $PM_{2.5}$ NAAQS.
Interstate Transport Requirements—2008 Lead NAAQS.	Statewide	7/9/2012	8/4/2014, 79 FR 45103	Approves SIP for purposes of CAA section 110(a)(2)(D)(i)(I) for the 2008 Lead NAAQS.
Infrastructure Requirements—1997 $PM_{2.5}$ NAAQS.	Statewide	7/9/2012	11/10/2014, 79 FR 66651	Approves SIP for purposes of CAA section 110(a)(2)(A), (B), (C), (D)(ii), (E), (F), (H), (J), (K), (L), and (M) for the 1997 $PM_{2.5}$ NAAQS.
Infrastructure Requirements—2006 $PM_{2.5}$ NAAQS.	Statewide	7/9/2012, 3/29/2011	11/10/2014, 79 FR 66651	Approves SIP for purposes of CAA section 110(a)(2)(A), (B), (C), (D)(i)(II), (D)(ii), (E), (F), (H), (J), (K), (L), and (M) for the 2006 $PM_{2.5}$ NAAQS.
Infrastructure Requirements—2008 Ozone NAAQS.	Statewide	7/9/2012, 3/29/2011	11/10/2014, 79 FR 66651	Approves SIP for purposes of CAA section 110(a)(2)(A), (B), (C), (D)(i)(II), (D)(ii), (E), (F), (G), (H), (J), (K), (L), and (M) for the 2008 Ozone NAAQS.
Infrastructure Requirements—2010 NO_2 NAAQS.	Statewide	5/12/2015	5/12/2017, 82 FR 22081	Approves SIP for purposes of CAA section 110(a)(2)(A), (B), (C), (D)(i)(II), (D)(ii), (E), (F), (G), (H), (J), (K), (L), and (M) for the 2010 NO_2 NAAQS.

EPA-APPROVED ALASKA NONREGULATORY PROVISIONS AND QUASI-REGULATORY MEASURES—Continued

Name of SIP provision	Applicable geographic or nonattainment area	State submittal date	EPA approval date	Explanations
Infrastructure Requirements—2010 SO_2 NAAQS.	Statewide	5/12/2015	5/12/2017, 82 FR 22081	Approves SIP for purposes of CAA section 110(a)(2)(A), (B), (C), (D)(i)(II), (D)(ii), (E), (F), (G), (H), (J), (K), (L), and (M) for the 2010 SO_2 NAAQS.
Regulations Approved but not Incorporated by Reference				
18 AAC 50.076(g)(11) Solid Fuel-fired Heating Device Fuel Requirements; Registration of Commercial Wood Sellers.	Statewide	11/26/2016	9/8/2017, 82 FR 42457.	
21.28.030.J Prohibited Acts. Penalties.	Fairbanks North Star Borough.	10/1/2016 (borough effective date)	9/8/2017, 82 FR 42457 ...	FNSB Code Chapter 21.28 $PM_{2.5}$ Air Quality Control Program.
21.28.040 Enhanced voluntary removal, replacement and repair program.	Fairbanks North Star Borough.	1/15/2016 (borough effective date)	9/8/2017, 82 FR 42457 ...	FNSB Code Chapter 21.28 $PM_{2.5}$ Air Quality Control Program.
21.28.070 Voluntary burn cessation program.	Fairbanks North Star Borough.	4/24/2015 (borough effective date)	9/8/2017, 82 FR 42457 ...	FNSB Code Chapter 21.28 $PM_{2.5}$ Air Quality Control Program.

[79 FR 19822, Apr. 10, 2014, as amended at 79 FR 56272, Sept. 19, 2014; 79 FR 45104, Aug. 4, 2014; 79 FR 66653, Nov. 10, 2014; 80 FR 833, Jan. 7, 2015; 80 FR 30162, May 27, 2015; 80 FR 53738, Sept. 8, 2015; 81 FR 31512, May 19, 2016; 81 FR 85162, Nov. 25, 2016; 82 FR 22083, May 12, 2017; 82 FR 37308, Aug. 10, 2017; 82 FR 40713, Aug. 28, 2017; 82 FR 42471, Sept. 8, 2017; 82 FR 57838, Dec. 8, 2017; 83 FR 15747, Apr. 12, 2018]

EFFECTIVE DATE NOTES: 1. At 83 FR 29450, June 25, 2018, § 52.70 was amended in the table in paragraph (e) by adding an entry for ''Interstate Transport Requirements—2010 NO_2 and 2010 SO_2 NAAQS'' after the entry for ''Infrastructure Requirements—2010 SO_2 NAAQS,'' effective July 25, 2018. For the convenience of the user, the added text is set forth as follows:

§ 52.70 Identification of plan.

* * * * *

(e) * * *

EPA-APPROVED ALASKA NONREGULATORY PROVISIONS AND QUASI-REGULATORY MEASURES

Name of SIP provision	Applicable geographic or non-attainment area	State submittal date	EPA approval date	Explanations
*	*	*	*	*
		*	*	
State of Alaska Air Quality Control Plan: Volume III. Appendices				
*	*	*	*	*
		*	*	
Infrastructure and Interstate Transport				

EPA-APPROVED ALASKA NONREGULATORY PROVISIONS AND QUASI-REGULATORY MEASURES—Continued

Name of SIP provision	Applicable geographic or non-attainment area	State submittal date	EPA approval date	Explanations
*	*	*	*	*
Interstate Transport Requirements—2010 NO_2 and 2010 SO_2 NAAQS.	Statewide	3/10/2016	6/25/2018, 83 FR 29449.	Approves SIP for purposes of CAA section 110(a)(2)(D)(i)(I) for the 2010 NO_2 and 2010 SO_2 NAAQS.
*	*	*	*	*

* * * * *

2. At 83 FR 30049, June 27, 2018, § 52.70 was amended in the table in paragraph (e) by adding the entry ''Interstate Transport Requirements–2012 $PM_{2.5}$ NAAQS'' after the entry ''Infrastructure Requirements—2010 SO_2 NAAQS,'' effective July 27, 2018. For the convenience of the user, the added text is set forth as follows:

§ 52.70 Identification of plan.

* * * * *

(e) * * *

EPA-APPROVED ALASKA NONREGULATORY PROVISIONS AND QUASI-REGULATORY MEASURES

Name of SIP provision	Applicable geographic or nonattainment area	State submittal date	EPA approval date	Explanations
*	*	*	*	*
Infrastructure and Interstate Transport				
*	*	*	*	*
Interstate Transport Requirements—2012 $PM_{2.5}$ NAAQS.	Statewide	3/10/2016	6/27/2018, 83FR 30048.	Approves SIP for purposes of CAA section 110(a)(2)(D)(i)(I) for the 2012 $PM_{2.5}$ NAAQS.
Regulations Approved but not Incorporated by Reference				
*	*	*	*	*

* * * * *

§ 52.71 Classification of regions.

The Alaska plan was evaluated on the basis of the following classifications:

Air quality control Region	Pollutant				
	Particulate matter	Sulfur oxides	Nitrogen dioxide	Carbon monoxide	Ozone
Cook Inlet Intrastate	I	III	III	I	III.
Northern Alaska Intrastate	I	III	III	I	III.

Air quality control Region	Pollutant				
	Particulate matter	Sulfur oxides	Nitrogen dioxide	Carbon monoxide	Ozone
South Central Alaska Intrastate	III	III	III	III	III.
Southeastern Alaska Intrastate	III	III	III	III	III.

[37 FR 10848, May 31, 1972, as amended at 48 FR 30625, July 5, 1983]

§ 52.72 Approval status.

With the exceptions set forth in this subpart, the Administrator approves Alaska's plan for the attainment and maintenance of the national standards. The State included in the plan a regulation prohibiting idling of unattended motor vehicles. However, the plan stated that this regulation was included for informational purposes only, and was not to be considered part of the control strategy to implement the national standards for carbon monoxide. Accordingly, this regulation is not considered a part of the applicable plan.

[37 FR 15080, July 27, 1972]

§ 52.73 Approval of plans.

(a) Carbon monoxide.

(1) Anchorage.

(i) EPA approves as a revision to the Alaska State Implementation Plan, the Anchorage Carbon Monoxide Maintenance Plan (Volume II Section III.B of the State Air Quality Control Plan, adopted January 2, 2004, effective February 20, 2004 and Volume III of the Appendices adopted January 2, 2004, effective February 20, 2004) submitted by the Alaska Department of Environmental Conservation on February 18, 2004.

(ii) EPA approves as a revision to the Alaska State Implementation Plan, the Anchorage Carbon Monoxide Maintenance Plan (Volume II Sections II, III.A and III.B of the State Air Quality Control Plan adopted August 20, 2010, effective October 29, 2010, and Volume III of the Appendices adopted August 20, 2010, effective October 29, 2010) submitted by the Alaska Department of Environmental Conservation on September 29, 2010.

(iii) The EPA approves the following revised sections of the Anchorage Transportation Control Program, Anchorage CO Maintenance Plan (Volume II, Section III.B) of the Alaska SIP Submittal adopted July 13, 2011, and submitted on September 20, 2011: Planning Process (Section III.B.1), Maintenance Area Boundary (Section III.B.2), Nature of the CO Problem—Causes and Trends (Section III.B.3), Transportation Control Strategies (Section III.B.5), Modeling and Projections (Section III.B.6), Contingency Plan (Section III.B.7), Anchorage Emergency Episode Plan (Section III.B.8), Assurance of Adequacy (Section III.B.9) and Redesignation Request (Section III.B.11). The EPA also approves the following revised sections of the Appendices (Volume III): Anchorage Assembly Resolution No. 2011–133 (Appendix III.B.1), Anchorage 2007 Carbon Monoxide Emission Inventory and 2007–2023 Emission Projections (Appendix III.B.3), Analysis of Probability of Complying with the National Ambient Air Quality Standard for Carbon Monoxide in Anchorage between 2007 and 2023 (Appendix III.B.6) and Affidavit of Oral Hearing (Appendix III.B.10).

(iv) The EPA approves the following revised sections of the Anchorage Transportation Control Program, Anchorage CO Limited Maintenance Plan (Volume II, Section III.B), of the Alaska SIP Submittal adopted February 22, 2013, and submitted on April 22, 2013: Carbon Monoxide Monitoring Program (Section III.B.4) Air Quality Conformity Procedures (Section III.B.10), Limited Maintenance Plan for 2014–2024 (Section III.B.12). In this action, the EPA also approves the following revised sections of the Appendices (Volume III): Anchorage Assembly Resolution No. 2013–20 (Appendix III.B.1) and Affidavit of Oral Hearing (Appendix III.B.10).

(2) Fairbanks.

(i) EPA approves as a revision to the Alaska State Implementation Plan, the

Fairbanks Carbon Monoxide Maintenance Plan (Volume II.C of the State Air Quality Control Plan, adopted April 27, 2004 and Volume III.C of the Appendices adopted April 27, 2004, effective June 24, 2004) submitted by the Alaska Department of Environmental Conservation on June 21, 2004.

(ii) The EPA approves as a revision to the Alaska State Implementation Plan, the Fairbanks Carbon Monoxide Limited Maintenance Plan (Volume II, Section III.C.12 of the State Air Quality Control Plan, adopted February 22, 2013) submitted by the Alaska Department of Environmental Conservation on April 22, 2013. In this action, the EPA is also approving the following revised sections of the Fairbanks Transportation Control Program (Volume II, Section III.C): Air Quality Emissions Data (Section III.C.3), Carbon Monoxide Network Monitoring Program (Section III.C.4), Modeling and Projections (Section III.C.6), and Air Quality Conformity Procedures (Section III.C.10); and the following revised sections of the Appendices to Volume II of the Fairbanks Transportation Control Program (Volume III): Section III.C.1 and Section III.C.10, all of which were included in the April 22, 2013 SIP submittal.

(b) *Lead*. [Reserved]

(c) *Nitrogen dioxide*. [Reserved]

(d) *Ozone*. [Reserved]

(e) *Particulate matter*. (1) *Mendenhall Valley*. (i) The EPA approves as a revision to the Alaska State Implementation Plan, the Mendenhall Valley PM_{10} Limited Maintenance Plan (Volume II, Section III.D.3 of the State Air Quality Control Plan, and Volume III.D.3.5, Volume III.D.3.8, and Volume III.D.3.9 of the Appendices (to Volume II, section III.D.3)) adopted February 20, 2009, and submitted by the Alaska Department of Environmental Conservation to the EPA on May 14, 2009.

(ii) [Reserved]

(f) *Sulfur dioxide*. [Reserved]

(g) *Visibility protection*. (1) EPA approves the Regional Haze SIP revision submitted by the Alaska Department of Environmental Conservation on April 4, 2011, as meeting the requirements of Clean Air Act sections 169A and 169B, and Federal Regulations 40 CFR 51.308 to implement a regional haze program in the State of Alaska for the first planning period through July 31, 2018.

(2) [Reserved]

[67 FR 58712, Sept. 18, 2002, as amended at 69 FR 24936, June 23, 2004; 69 FR 44605, July 27, 2004; 77 FR 1417, Jan. 10, 2012; 78 FR 907, Jan. 7, 2013; 78 FR 10554, Feb. 14, 2013; 78 FR 27077, May 9, 2013; 78 FR 48615, Aug. 9, 2013; 79 FR 1171, Mar. 3, 2014]

§52.74 Original identification of plan section.

(a) This section identified the original ''Air Quality Implementation Plan for the State of Alaska'' and all revisions submitted by Alaska that were Federally-approved prior to March 4, 2014.

(b) The plan was officially submitted on April 25, 1972.

(c) The plan revisions listed below were submitted on the dates specified.

(1) Modifications to the implementation plan including a revision to Title 18, Chapter 50, section 160 and other nonregulatory provisions submitted on June 22, 1972, by the Governor.

(2) Compliance schedules submitted on August 2, 1973, by the State of Alaska Department of Environmental Conservation.

(3) Compliance schedules submitted on August 23, 1973, by the State of Alaska Department of Environmental Conservation.

(4) Compliance schedules submitted on September 30, 1975, by the State of Alaska Department of Environmental Conservation.

(5) Compliance schedules submitted on January 6, 1976, by the State of Alaska Department of Environmental Conservation.

(6) Compliance schedules submitted on September 30, 1975, by the State of Alaska Department of Environmental Conservation.

(7) Part D attainment plans for the Anchorage and Fairbanks carbon monoxide nonattainment areas submitted by the Governor of Alaska on January 18, 1980 as follows:

VOLUME II. ANALYSIS OF PROBLEMS, CONTROL ACTIONS

Section III. *Areawide Pollutant Control Efforts*, Subsection A.

Carbon Monoxide, except subparts 1.c (Other areas) and 5.h (Fairbanks Emergency Avoidance Plan)

VOLUME III. APPENDICES

III–1 A Review of Carbon Monoxide Emissions from Motor Vehicles during Cold Temperature Operation
III–2 Cold Weather Related Strategy Support Development
III–3 Preliminary Assessment of Meteorological Conditions during Days of Ambient Air Quality Violations in Anchorage
III–4 Summary of the 1978 Fairbanks Voluntary Vehicle Emissions Inspection Program
III–5 Approach of Evaluating an Alaska I/M Program
III–6 Appendices to the Anchorage Air Quality Plan
III–7 Appendices to the Fairbanks Air Quality Plan

(8) On January 18, 1980, the State of Alaska Department of Environmental Conservation submitted a plan revision to meet the requirements of Air Quality Monitoring, 40 CFR part 58, subpart C, § 58.20, as follows:

VOLUME II. ANALYSIS OF PROBLEMS, CONTROL ACTIONS

Section V. *Ambient Air Monitoring*
A. Purpose
C. Air Monitoring Network
E. Annual Review

(9) Provisions of a State Air Quality Control Plan submitted by the Governor of Alaska on January 18, 1980, as follows:

VOLUME II. ANALYSIS OF PROBLEMS, CONTROL ACTIONS

Section I. *Introduction*
A. Summary
B. Air Quality Control Regions
C. Attainment/Nonattainment Designations
Section II. *Alaskan Air Quality Control Programs*
A. State Program
B. Local Programs
C. Resource Needs
Section III. *Areawide Pollutant Control Efforts*
A. Carbon Monoxide, Subpart 1.c (Other areas)
B. Total Suspended Particulate Matter
C. Ice Fog
D. Open Burning—Forest Practices
Section IV. *Point Source Control Efforts*
A. Summary
B. Description of Source Categories and Pollutants
C. Summary of Major Emitting Sources
D. History of Alaskan Point Source Program
F. Local Program Enforcement
G. New Source Review and Approval
H. Compliance Assurance
I. State Air Quality Control Regulations
Section V. *Ambient Air Monitoring*
B. Description of Previous Air Monitoring Network

VOLUME III. APPENDICES

I–1 Summary of Public Hearings, Written Testimony, etc.
I–2 Recommendations for attainment/Nonattainment designations
II–1 Alaska Statutes, except section 46.03.170
II–2 Regulations of the Fairbanks North Star Borough, except section 8.04.070
II–3 Fairbanks North Star Borough/Alaska Department of Environmental Conservation Agreement
II–4 Municipality of Anchorage/Alaska Department of Environmental Conservation Agreement
II–5 Alaska State Department of Law Legal Opinion
IV–1 Summaries of Emission Inventories
IV–2 D. Permit to Operate for the Fairbanks Municipal Utilities System
IV–3 Testing Procedures
V–1 Air Quality Data

An amended Appendix II–5, ''Alaska State Department of Law Legal Opinion'' submitted by the State of Alaska Department of Environmental Conservation on February 29, 1980. Amendments to the January 18, 1980 submittal, submitted by the State of Alaska Department of Environmental Conservation on September 29, 1982 as follows:

VOLUME II. ANALYSIS OF PROBLEMS, CONTROL ACTIONS

Section I. *Introduction*
C. Attainment/Nonattainment Designations
Section III. *Areawide Pollutant Control Efforts*
D. Open Burning—Forest Practices
Section IV. *Point Source Control Efforts*
C. Summary of Major Emitting Sources
D. History of Alaskan Point Source Program
F. Local Program Enforcement
G. New Source Review and Approval
H. Compliance Assurance
I. State Air Quality Control Regulations
Section V. *Ambient Air Monitoring*
C. Air Monitoring Network
E. Annual Review

VOLUME III. APPENDICES

IV–4 ADEC Ambient Analysis Procedures

(10) On November 15, 1983 the State of Alaska Department of Environmental Conservation submitted a revision to

add a lead strategy to the Alaska Implementation Plan.

(11) Provisions of a State Air Quality Control Plan submitted by the Alaska Department of Environmental Conservation on November 15, 1983, as follows:

VOLUME II. ANALYSIS OF PROBLEMS, CONTROL ACTIONS

Section I. *Background*

A. Introduction
B. Air Quality Control Regions
C. Attainment/Nonattainment Designations
D. Prevention of Significant Deterioration Designations

Section II. *State Air Quality Control Program*

Section III. *Areawide Pollutant Control Program*

D. Total Suspended Particulate Matter
E. Ice Fog
F. Open Burning
G. Wood Smoke Pollution Control

Section IV. *Point Source Control Program*

A. Summary
1. Annual Review Report
B. State Air Quality Regulations
C. Local Programs
D. Description of Source Categories and Pollutants
1. Typical Point Sources
2. Summary of Major Emitting Facilities
E. Point Source Control
1. Introduction
F. Facility Review Procedures
1. Who needs a permit?
2. Standard Application Procedures
3. PSD Application Procedures, Preliminary report and meeting, Pre-construction monitoring, PSD application format
4. Nonattainment Application Procedures
G. Application Review and Permit Development
1. Application Review
2. Permit Development Requirement, Monitoring and Testing Requirements, Ambient Monitoring, Continuous Emissions Monitoring, Source Testing
3. Prevention of Significant Deterioration Review, Basis of Program, PSD Regulations, PSD Analysis Procedure
4. Nonattainment Area Review
5. New Source Performance Standards Source Review
6. Visibility Review
7. Sources under EPA Review
H. Permit Issuance Requirements

Section V. *Ambient Air Monitoring*

A. Purpose
B. Completed Air Monitoring Projects
1. Carbon Monoxide
2. Nitrogen Oxides
3. Sulfur Dioxide
4. Ozone
5. Total Suspended Particulates (TSP)
6. Lead
C. Air Monitoring Network
1. Network Description
2. Station Designations
3. Air Quality Monitoring Procedures
4. Ambient Sampling for Specific Pollutants
E. Annual Review

VOLUME III. APPENDICES

Section II. *State Air Quality Control Program*

II.A. State Air Statutes, except section 46.03.170, State Attorney General Opinions on Legal Authority
II.B. Municipality of Anchorage/Cook Inlet/ADEC Agreements
II.C. Fairbanks North Star Borough Ordinances/FNSB & ADEC Agreements

Section III. *Areawide Pollutant Control Program*

III.G. Ordinance of the City and Borough of Juneau

Section IV. *Point Source Control Program*

IV.1. PSD Area Classification and Reclassifications
A. Class I Area Boundaries
B. Areas Protected from Visibility Degradation
C. Reclassification
1. Limitations on PSD Reclassification
2. PSD Reclassification Procedures
IV.2. Compliance Assurance
IV.3. Testing Procedures

Section V. *Ambient Air Monitoring*

ADEC Ambient Analysis Procedures

Title 18. Environmental Conservation, *Chapter 50. Air Quality Control*, Sections 021(d), 030(g), 040(a)(2), 040(c), 050(a)(2), 050(b)(4), 085, 300(a)(1), 300(a)(7), 400(d)(6), 500(d), 500(e), 510 (Editor's Note), 520(a), 520(b), 610(a), 620, 900(15), 900(39), 900(47), and 900(48).

(12) On September 29, 1982, the Commissioner of the Alaska Department of Environmental Conservation submitted a carbon monoxide attainment plan for the cities of Anchorage (section III.B) and Fairbanks (section III.C) as a revision to the Alaska State Implementation Plan. On November 15, 1983, a revision to this plan was submitted for the city of Anchorage. Supplement to the

Anchorage and Fairbanks plans revisions to section III.A (Areawide Pollutant Control Program, Statewide Transportation Control Program) and a new State Regulation 18 AAC Chapter 52 (Emissions Inspection and Maintenance Requirements for Motor Vehicles) were submitted on May 31, 1985.

(i) *Incorporation by reference.* (A) May 31, 1985 letter from the State of Alaska to EPA, and State Regulation 18 AAC 52 (Emissions Inspection and Maintenance Requirements for Motor Vehicles) as filed by the Commissioner for the State of Alaska on May 19, 1985.

(B) Page section III.B.8–3 of the Anchorage Transportation Control Program, Alaska Air Quality Control Plan, revised June 1, 1985 (emissions and air quality projections for Anchorage with vehicle inspection and maintenance program).

(C) Table C.6.a of the Fairbanks Transportation Control Program, Alaska Air Quality Control Plan [reasonable further progress required reductions for Fairbanks] (page section III.C.6–2) revised November 20, 1982.

(ii) *Other material.* (A) Section III.A Statewide Transportation Control Program.

(B) Section III.B Anchorage Transportation Control Program.

(C) Section III.C Fairbanks Transportation Control Program.

(D) The I/M Program Design for the Fairbanks North Star Borough dated October 25, 1984.

(E) The I/M Program Design for the Municipality of Anchorage dated 1984.

(13) On June 26, 1987, the State of Alaska Department of Environmental Conservation submitted Section III.B.10–1 through III.B.10–6 (Anchorage Air Pollution Episode Curtailment Actions); Section III.C.10–1 through III.C.10–9 (Fairbanks Emergency Episode Prevention Plan); and minor modifications to Section III.C.5–7 (Fairbanks Inspection and Maintenance Program Design).

(i) *Incorporation by reference.* (A) June 26, 1987 letter from the State of Alaska Department of Environmental Conservation to EPA Region 10.

(B) Section III.B.10–1 through III.B.10–6 of Volume II (Anchorage Air Pollution Episode Curtailment Actions) as adopted as an ordinance by the Anchorage Assembly on September 9, 1986.

(C) Section III.C.10–1 through III.C.10–9 of Volume II (Fairbanks Emergency Episode Prevention Plan) as adopted as an ordinance by the Assembly of the Fairbanks North Star Borough on December 19, 1985.

(D) Page number Section III.C.5–7 of Volume II (Fairbanks Inspection and Maintenance Design). This new page supercedes the current page number Section III.C.5–7 of the Alaska Air Quality Control Plan as adopted by the Alaska Department of Environmental Conservation on June 26, 1987.

(14) On June 26, 1987, the Commissioner of the Alaska Department of Environmental Conservation submitted revised rules regulating the height of stacks and the use of dispersion techniques, specifically revisions to 18 AAC 50.400(a), 18 AAC 50.530(c), 18 AAC 50.900(16), 18 AAC 50.900(20), 18 AAC 50.900(23), and 18 AAC 50.900.(29), and the deletion of 18 AAC 50.900(17).

(i) *Incorporation by reference.* (A) June 26, 1987 letter from the State of Alaska Department of Environmental Conservation to EPA, Region 10.

(B) August 11, 1987 letter from the State of Alaska Department of Environmental Conservation to EPA, Region 10.

(C) 18 AAC 50.400(a) and 18 AAC 50.900 (16), (20), (23), and (29) as adopted by the State of Alaska Department of Environmental Conservation on December 31, 1986.

(15) On September 12, 1988, the State of Alaska Department of Environmental Conservation submitted revisions to AAC 18 Chapter 52 (Emission Inspection and Maintenance Requirements for Motor Vehicles). Those sections amended through June 2, 1988, are: 18 AAC 51.010 [Purpose and General Requirements] (a)(3), (b), (d), (e), and (g); 18 AAC 52.020 [Vehicles Subject to this Chapter] (1); 18 AAC 52.070 [Waivers] (5)(A) through (C); and 18 AAC 52.900 [Definitions] (14).

(i) *Incorporation by reference.* (A) September 12, 1988 letter from the State of Alaska Department of Environmental Conservation to EPA Region 10.

(B) Chapter 52 [Emissions Inspection and Maintenance Requirements for Motor Vehicles] section 52.010 [Purpose

and General Requirements (a)(3), (b), (d), (e), and (g); section 52.020 [Vehicles Subject to This Chapter] (1); section 52.070 [Waivers] (5)(A) through (C); and section 52.900 [Definitions] (14) as adopted by the State of Alaska Department of Environmental Conservation on March 10, 1988.

(16) On September 12, 1988, the State of Alaska Department of Environmental Conservation submitted revisions to the State of Alaska state implementation plan. Specifically pages IV.F.1–1 through IV.F.1–8 of section IV.F ''Project Review Procedures'' and amendments to title 18, chapter 50, sections 050(a)(4), 050(b), 050(d)(1), 300(a)(5)(C), 300(a)(6)(C), 300(a)(7), 300(c), 300(g), 500(d), 510(a), 520(a), 520(b), and 620 of the Alaska Administrative Code.

(i) *Incorporation by reference.* (A) September 12, 1988, letter from the State of Alaska Department of Environmental Conservation to EPA Region 10 submitting a revision to the Alaska state implementation plan.

(B) Vol. II, Analysis of Problems, Control Actions, Pages IV.F.1–1 through IV.F.1–8 of section IV.F, ''Project Review Procedures,'' revised June 2, 1988.

(C) Title 18, chapter 50, (Air Quality Control) section 050 (Industrial Processes and Fuel Burning Equipment) (a)(4), 050(b), 050(d)(1), 300 (Permit to Operate) (a)(5)(C), 300(a)(6)(C), 300(a)(7), 300(c), 300(g), 500 (Source Testing) (d), 510 (Ambient Analysis Methods) (a), 520 (Emission and Ambient Monitoring) 520(a), 520(b), and 620 (Air Quality Control Plan) of the Alaska Administrative Code as adopted by the State of Alaska Department of Environmental Conservation on March 10, 1988 and effective on June 2, 1988.

(17) On October 17, 1991, the State of Alaska Department of Environmental Conservation submitted a PM_{10} nonattainment area state implementation plan for Eagle River, Alaska.

(i) *Incorporation by reference.* (A) October 15, 1991 letter from Alaska Department of Environmental Conservation to EPA Region 10 submitting the PM_{10} nonattainment area state implementation plan for Eagle River, Alaska.

(B) The PM_{10} nonattainment area state implementation plan for Eagle River, Alaska, as adopted by the Anchorage Assembly on February 6, 1990 and effective on September 24, 1991.

(18) On June 22, 1993, the Governor of the State of Alaska submitted revised rules to satisfy certain Federal Clean Air Act requirements for an approvable moderate PM_{10} nonattainment area SIP for Mendenhall Valley, Alaska. Also included in this SIP were PM_{10} contingency measures for the Mendenhall Valley. On January 21, 1992, a supplement to the existing Eagle River PM_{10} control plan was submitted by ADEC to EPA and certified on March 8, 1993, by the Lieutenant Governor of Alaska.

(i) *Incorporation by reference.* (A) June 22, 1993, letter from the Governor of the State of Alaska to EPA, Region 10, submitting the moderate PM_{10} nonattainment area SIP for Mendenhall Valley, Alaska.

(B) The Control Plan for Mendenhall Valley of Juneau, effective July 8, 1993.

(C) August 25, 1993, letter from ADEC showing, through enclosures, the permanent filing record for the supplement to the existing Eagle River PM_{10} control plan. The Lieutenant Governor certified the supplement on March 8, 1993.

(D) The January 21, 1992, supplement to the existing Eagle River PM_{10} control plan, effective April 7, 1993. Also included is an August 27, 1991 Municipality of Anchorage memorandum listing the 1991 capital improvement project priorities and an October 11, 1991, Municipality of Anchorage memorandum summarizing the supplement to the existing PM_{10} control plan.

(19) The Environmental Protection Agency (EPA) takes action on and/or approves regulations from three submittals received from the ADEC on July 17, 1990, October 15, 1991 and on March 24, 1994, which pertain to correcting SIP deficiencies in the CFR; amendments to regulations dealing with Air Quality Control, 18 AAC 50, for inclusion into Alaska's SIP; and additional amendments to 18 AAC 50, Air Quality Control, for inclusion into Alaska's SIP to assure compliance with new source review permitting requirements for sources located in nonattainment areas for either carbon monoxide or particulate matter.

(i) *Incorporation by reference.* (A) July 17, 1990 letter from ADEC to EPA requesting correction for findings of SIP deficiency in 40 CFR Part 52, and including the version of Alaska Statutes, ''Title 46. Water, Air, Energy, and Environmental Conservation,'' in effect at the time of the July 17, 1990 letter, of which Sections 46.03.020, 46.03.030, 46.03.032, and 46.03.715, amended in 1987, were the most recently amended of the enclosed statutes.

(B) October 15, 1991 letter from ADEC to EPA, and including amendments to regulations and the State Air Quality Control Plan to assure compliance with national ambient air quality standards for particulate matter; the Order Amending Regulations of the Department of Environmental Conservation, effective July 21, 1991; and the following *Alaska Administrative Code, 18 AAC 50, Air Quality Control Regulations:* (50.020; 50.085; 50.100; 50.300; 50.400; 50.510, 50.520, 50.610, and 50.900), effective July 21, 1991, Register 119.

(C) March 24, 1994 letter from Walter J. Hickel, Governor of Alaska, to Chuck Clarke, Regional Administrator of EPA, and including amendments to 18 AAC 50, State Air Quality Control Plan; the Order Adopting and Amending Regulations of the Department of Environmental Conservation, effective April 23, 1994, Register 130; and the amendments to 18 AAC 50 (50.021, 50.300(a)(7) and (a)(8), 50.300 (d), (e), and (g), 50.400(a)(1)(A), 50.400(c)(3)(B)(ii), 50.400(c)(4), 50.400(d)(4), and 50.620), State Air Quality Control Plan, found in Volume III: Appendices, Modifications to Section III.A, effective April 23, 1994, Register 130.

(20) On April 18, 1994, the Commissioner of the Alaska Department of Environmental Conservation (ADEC) submitted ''The Alaska Air Quality Small Business Assistance Program State Air Quality Control Plan Amendment,'' adopted April 8, 1994, as a revision to the Alaska SIP.

(i) *Incorporation by reference.* (A) Letter dated April 8, 1994, from the Commissioner of ADEC to the Regional Administrator of EPA, submitting ''The Alaska Air Quality Small Business Assistance Program State Air Quality Control Plan Amendment'' to EPA; the Alaska Air Quality Small Business Assistance Program State Air Quality Control Plan Amendment (which includes Appendix A the Alaska Statutes Title 46, Chapter 14, Article 3), dated April 1994, and adopted April 8, 1994.

(ii) *Additional information.* (A) Letter dated July 24, 1995, from Alaska Department of Environmental Conservation, submitting information necessary for approval of the SBAP revision to EPA; the July 1995 SBAP Update, Responses to EPA Comments, and the Air Quality/Small Business Assistance Compliance Advisory Panel Board Information.

(21) On July 11, 1994 ADEC submitted a SIP revision for a basic motor vehicle inspection and maintenance (I/M) program in the Municipality of Anchorage (MOA) and the Fairbanks North Star Borough (FNSB).

(i) *Incorporation by reference.* (A) July 11, 1994 letter from the Governor of Alaska to the Regional Administrator of EPA submitting Alaska's amendments to the Air Quality Control Plan and to 18 AAC 52, Emissions Inspection and Maintenance Requirements for Motor Vehicles; the amendments to 18 AAC 52 (52.005, .015, .020, .030, .035, .040, .045, .050, .055, .060, .065, .070, .075, .080, .085, .090, .095, .100, .105, .400, .405, .410, .415, .420, .425, .430, .440, .445, .500, .505, .510, .515, .520, .525, .527, .530, .535, .540, .545, .550, and .990), effective February 1, 1994; and the State Air Quality Control Plan, Vol. II: Analysis of Problems, Control Actions, Modifications to Section I, June 9, 1994; Vol. II: Analysis of Problems, Control Actions, Modifications to Section I, II, III and V, adopted January 10, 1994; Vol. III: Appendices, Modifications to Section III.A, June 9, 1994; Vol. III: Appendices, Modifications to Section III.B, June 9, 1994; and Vol. III: Appendices, Modifications to Section III.C, June 9, 1994.

(22) On March 24, 1994, ADEC submitted a revision to its SIP for the State of Alaska addressing the attainment and maintenance of the National Ambient Air Quality Standards for carbon monoxide in the Anchorage carbon monoxide nonattainment area.

(i) *Incorporation by reference.* (A) March 24, 1994 letter from Alaska Governor Walter Hickel to EPA Regional Administrator Chuck Clarke including as a revision to the SIP the State of

Alaska, Department of Environmental Conservation, 18 AAC 53, ''Fuel Requirements for Motor Vehicles,'' (Article 1, 18 AAC 53.005–18 AAC 53.190 and Article 9, 18 AAC 53.990) with amendments adopted through March 19, 1994.

(23) On March 24, 1994, ADEC submitted a SIP revision to EPA to satisfy the requirements of sections 187(a)(2)(A) and 187(a)(3) of the CAA, forecasting and tracking VMT in the Anchorage area.

(i) *Incorporation by reference.* (A) March 24, 1994 letter from the Alaska Governor to the EPA Regional Administrator including as a revision to the SIP the VMT requirement in the Anchorage area, contained in ADEC's State Air Quality Control Plan, Volume III: Appendices, Modifications to Section III.B.6, III.B.8, III.B.10 and III.B.11, adopted January 10, 1994; and further description on pages 10–14, 57–60 and 69–75 contained in ADEC's State Air Quality Control Plan, Volume III: Appendices, Modifications to Section III.B, III.B.1, and III.B.3, adopted January 10, 1994.

(24) On December 5, 1994 the Alaska Department of Environmental Conservation sent EPA revisions for inclusion into Alaska's SIP that address transportation and general conformity regulations as required by EPA under the CAA.

(i) *Incorporation by reference.* (A) December 5, 1994 letter from the Governor of Alaska to EPA, Region 10, submitting amendments addressing transportation and general conformity revisions to the SIP:

(*1*) Regulations to 18 AAC 50, Air Quality Control, including Article 5, Procedure and Administration, 18 AAC 620; Article 6, Reserved; Article 7, Conformity, 18 AAC 50.700–18 AAC 50.735; Article 8, Reserved; and Article 9, General Provisions, 18 AAC 50.900, all of which contain final edits (23 pages total) by the Alaska Department of Law, were filed by the Lieutenant Governor on December 5, 1994 and effective on January 4, 1995.

(*2*) Amendments to the Alaska State Air Quality Control Plan, ''Volume II: Analysis of Problems, Control Actions,'' as revised on December 1, 1994, adopted by reference in 18 AAC 50.620, containing final edits by the Alaska Department of Law, all of which were certified by the Commissioner of Alaska to be the correct plan amendments, filed by the Alaska Lieutenant Governor on December 5, 1994 and effective on January 4, 1995.

(25) On March 24, 1994, ADEC submitted a revision to its SIP for the State of Alaska addressing the attainment and maintenance of the NAAQS for CO in the Anchorage CO nonattainment area.

(i) *Incorporation by reference.* (A) March 24, 1994 letter from the Alaska Governor to the EPA Regional Administrator including as a revision to the SIP the State of Alaska, Department of Environmental Conservation, 18 AAC 53, ''Fuel Requirements for Motor Vehicles,'' (Article 1, 18 AAC 53.005–18 AAC 53.190 and Article 9, 18 AAC 53.990, with the exception of 18 AAC 53.010(c)(2)), filed March 24, 1994 and effective on April 23, 1994.

(26) Submittal to EPA from the ADEC of CO contingency measure for Fairbanks, AK.

(i) *Incorporation by reference.* (A) Letter dated July 12, 1995 from the Commissioner of the ADEC to the EPA Regional Administrator submitting its repair technician and certification program element found in State regulation 18 AAC 52.400–410, effective June 24, 1994.

(27) On October 31, 1997, ADEC submitted revisions to Fuel Requirements for Motor Vehicles, title 18, chapter 53 of the Alaska Administrative Code (18 AAC 53) regarding the use of oxygenated fuels.

(i) *Incorporation by reference.* (A) Title 18, Chapter 53, Alaska Administrative Code (AAC), Fuel Requirements for Motor Vehicles, adopted October 31, 1997 (Article 1, 18 AAC 53 .005, .007, .010, .015, .020, .030, .035, .040, .045, .060, .070, .080, .090, .100, .105, .120, .130, .140, .150, .160, .170, .190; Article 9, 18 AAC 53.990).

(28) On January 8, 1997, the Director of the Alaska Department of Environmental Conservation submitted the Alaska air quality regulations, 18 Alaska Administrative Code (AAC) 50 (with the exception of 18 AAC 50.055(a)(9), 50.085, 50.090, 50.110, 50.300(g), and 50.310(l) which were not submitted), as effective on January 18, 1997. On March

17, 1998, the Director of the Alaska Department of Environmental Conservation resubmitted 18 AAC 50.055(a)(3) and (b)(6). EPA has approved the following provisions of 18 AAC 50, as effective on January 18, 1997: Section 005; Section 010, except for subsections (7) and (8); Section 025; Section 030; Section 035; Section 045; Section 050; Section 055, except for paragraph (d)(2)(B) and (a)(9); Section 060; Section 065; Section 070; Section 075; Section 200; Section 201; Section 205; Section 220; Section 240; Section 245; Section 400, paragraphs (a), (b)(1), and (c); Section 420; Section 430; Section 900; and Section 990, subsections (2), (3), (4), (5), (6), (8), (9), (10), (11), (14), (15), (16), (17), (19), (20), (23), (24), (25), (26), (29), (31), (32), (33), (34), (35), (37), (39), (40), (42), (43), (45), (47), (48), (50), (51), (53), (58), (59), (60), (61), (62), (63), (65), (66), (67), (69), (70), (71), (72), (74), (75), (78), (79), (80), (81), (83), (84), (85), (86), (89), (90), (91), (92), (93), (94), (95), (96), (97), (99), and (100). On January 8, 1997, the Director of the Alaska Department of Environmental Conservation submitted the current Alaska Statutes for air pollution control, specifically the 1993 Alaska Act (Chapter 74 State Legislative Act 1993). EPA has approved as federally enforceable provisions of the SIP, the following provisions of the Alaska Statutes, as effective June 25, 1993: AS 46.14.510(b); AS 46.14.550; AS 46.14.560; AS 46.14.990(1), (2), (3), (6), (7), (8), (10), (13), (15), (16), (17), (18), (22), (24), and (25); and AS 45.45.400(a). On January 8, 1997, the Director of the Alaska Department of Conservation submitted the ''In Situ Burning Guidelines for Alaska (revised 5/94).''

(i) *Incorporation by reference.* (A) 18 AAC 50.005; 18 AAC 50.010, except for subsections (7) and (8); 18 AAC 50.025; 18 AAC 50.030; 18 AAC 50.035; 18 AAC 50.045; 18 AAC 50.050; 18 AAC 50.055, except for paragraphs (d)(2)(B) and (a)(9); 18 AAC 50.060; 18 AAC 50.065; 18 AAC 50.070; 18 AAC 50.075; 18 AAC 50.200; 18 AAC 50.201; 18 AAC 50.205; 18 AAC 50.220; 18 AAC 50.240; 18 AAC 50.245; 18 AAC 50.400, paragraphs (a), (b)(1), and (c); 18 AAC 50.420; 18 AAC 50.430; 18 AAC 50.900; and 18 AAC 50.990, subsections (2), (3), (4), (5), (6), (8), (9), (10), (11), (14), (15), (16), (17), (19), (20), (23), (24), (25), (26), (29), (31), (32), (33), (34), (35), (37), (39), (40), (42), (43), (45), (47), (48), (50), (51), (53), (58), (59), (60), (61), (62), (63), (65), (66), (67), (69), (70), (71), (72), (74), (75), (78), (79), (80), (81), (83), (84), (85), (86), (89), (90), (91), (92), (93), (94), (95), (96), (97), (99), and (100); as effective on January 18, 1997.

(B) AS 46.14.510(b); AS 46.14.550; AS 46.14.560; AS 46.14.990(1), (2), (3), (6), (7), (8), (10), (13), (15), (16), (17), (18), (22), (24), and (25); and AS 45.45.400(a); as effective on June 25, 1993.

(C) Remove the following provisions of 18 AAC 50, as effective on June 2, 1988, from the current incorporation by reference: 18 AAC 50.010; 18 AAC 50.070; 18 AAC 50.900, subsections (19), (27), (30), (45), (46), and (48).

(29) The Environmental Protection Agency (EPA) approves various amendments to the Alaska State Air Quality Control Plan which are contained in three separate submittals to EPA, dated February 6, 1997, June 1, 1998, and September 10, 1998, and which include the inspection and maintenance program.

(i) *Incorporation by reference.* (A) Air Quality Control Regulations, 18 AAC 50.

Effective September 4, 1998: Section 700; Section 705; Section 710 (except for the incorporation by reference of sections 93.102(c), 93.102 (d), 93.104(d), 93.104(e)(2), 93.109(c)-(f), 93.118(e), 93.119(f)(3), 93.120(a)(2), 93.121(a)(1) and (b), and 93.124(b) of 40 CFR); Section 715; and Section 720.

(B) Emissions Inspection and Maintenance Requirements for Motor Vehicles 18 AAC 52.

(1) Effective January 1, 1998: Section 005; Section 010; 015; 020; 025; 035; 037; 050; 060, except for subsections (8)(c), (8)(d)(2) and (8)(e); 065; 070; 080; 085; 095; 100; 105; 400; 405; 415, except subsection (f)(1); 420, except subsection (a)(11); 425; 440; 500; 515; 520, except subsection (c)(9); 525; 527; 530, except subsections (b)(3), (c)(4)(C) and (d)(9); 535; 540; 545; 546; 990.

(2) Effective January 1, 1997: Section 055; 090.

(3) Remove the following provisions of 18 AAC 52, effective January 1, 1997: Section 060, subsection 8 (c) and 8 (e); Section 520, subsection (c)(9).

(4) Remove the following provisions of 18 AAC 52, effective January 1, 1998:

Section 060, subsection 8 (d)(2); Section 415, subsection (f)(1); Section 420, subsection (a) (11); Section 530, subsection (b)(3) and (d)(9).

(5) Remove the following provisions of 18 AAC 52, effective January 4, 1995: Section 530, subsection (c) (4)(c).

(C) Fuel Requirements for Motor Vehicles 18 AAC 53.

(1) Effective October 31, 1997: Section 05; 07; 10; 20; 30; 35; 40; 45; 60; 70; 80; 90; 200; 105; 120; 130; 140; 150; 160; 170; 190 and effective September 4, 1998, Section 990.

(2) Remove the following provision of 18 AAC 53.015, Expansion of Control Area, effective October 31, 1997.

(ii) *Additional material.* (A) Revisions to Alaska's State Air Quality Control Plan, Volume II: Section I, ''Background,'' I.A; I.B., I.C., I.D., and I.E., adopted 11/26/96; Part B—Anchorage Contingency Measures, adopted 5/18/98; Section II, ''State Air Quality Control Program,'' pages II–1 through II–4, adopted 5/18/98; Section III.A. ''Statewide Carbon Monoxide Control Program,'' pages III.A.1–1 through III.A.3–4, adopted 5/18/98; III.B. ''Anchorage Transportation Control Program,'' pages III.B.1–1 through III.B.6–7, adopted 5/18/98; III.B.8. ''Modeling and Projections,'' pages III.B.8–1 through III.B.9–2, adopted 5/18/98; III.B.10, ''Anchorage Air Pollution Episode Curtailment Plan,'' pages III.B.10–1 and III.B.10–2, revised 12/19/93; III.B.11. ''Assurance of Adequacy,'' pages III.B.11–1 through III.B.11–3, revised 5/18/98; III.B.12. ''Emissions Budget,'' page III.B.12–1, adopted 11/26/96; and various CO SIP streamlining edits throughout Volume II and Volume III of the State Air Quality Control Plan which make the document easier to read and better organized, adopted 5/18/98.

(30) On November 1, 1999, the Alaska Department of Environmental Conservation (ADEC) submitted a SIP revision to revise the visible emission limit for coal burning boilers, during start-up; shutdown; soot-blowing; grate cleaning; or other routine maintenance activities, that began operation before August 17, 1971, and submitted the required demonstration. This SIP revision is approved for the following facilities that submitted the required demonstration: Golden Valley Electric Association (GVEA), Healy (Unit #1); Eielson Air Force Base, Fairbanks (6 units); Aurora Energy, Fairbanks (4 units); and Clear Air Force Base, Clear (3 units). Additionally, we are approving a revision to the definitions section that will add definitions of grate cleaning and soot-blowing.

(i) *Incorporation by reference.* (A) 18 Alaska Administrative Code (AAC) 50.055(a)(9), Industrial Processes and Fuel-Burning Equipment; as State effective on November 4, 1999. 18 AAC 50.990, subsections (106) and (107), Definitions; as State effective on January 1, 2000.

(31) The Environmental Protection Agency (EPA) approves various amendments to the Alaska State Air Quality Control Plan which are contained in two separate submittals to EPA, dated February 24, 2000 and February 2, 2001, and which include the inspection and maintenance and fuels program.

(i) *Incorporation by reference.* (A) Air Quality Control Regulations, 18 AAC 50. Effective December 30, 2000: Section 030.

(B) Emissions Inspection and Maintenance Requirements for Motor Vehicles 18 AAC 52.

(*1*) Effective January 1, 2000: Sections 005; 015; 020; 025; 035; 037; 055; 060; 065; 070; 085; 100; 105; 410; 415; 420; 440; 500; 510; 515; 520; 525; 527; 530; 535; and 540.

(*2*) Effective December 30, 2000: Sections 050 and 990.

(C) Fuel Requirements for Motor Vehicles 18 AAC 53. Effective December 30, 2000: Section 080.

(32) On August 30, 2001 the Alaska Department of Environmental Conservation submitted revisions to the Carbon Monoxide State Implementation Plan for Fairbanks, Alaska.

(i) *Incorporation by reference.* (A) Air Quality Control Regulations, 18 AAC 50.030, as adopted 7/27/01, effective 9/21/01.

(B) Assembly Ordinance 2001–17 mandating a Fairbanks North Star Borough motor vehicle plug-in program, as adopted 4/12/2001, effective 4/13/01.

(ii) *Additional material.* Volume II, Section III.C of the State Air Quality Control Plan adopted 7/27/01, effective 9/21/01; Volume III.C3, III.C.5, C.11, and

C.12 of the Appendices; adopted 7/27/01, effective 9/21/01.

(33) [Reserved]

(34) On February 18, 2004, the Alaska Department of Environmental Quality submitted a CO maintenance plan and requested the redesignation of Anchorage to attainment for CO. The State's maintenance plan, attainment year emissions inventory, and the redesignation request meet the requirements of the Clean Air Act.

(i) *Incorporation by reference.* (A) 18AAC50.010, Ambient air quality standards, as effective June 21, 1998, except for subsections (7) and (8).

(B) 18AAC50.015, Air quality designations, classifications, and control regions, as in effect February 20, 2004.

(C) 18AAC53.010, Control periods and control areas, as in effect February 20, 2004.

(D) 18AAC53.190, Suspension and reestablishment of control period, as in effect February 20, 2004.

(E) 18AAC50.021, of the State Air Quality Control Plan, as referenced in (c)(19)(i)(C) of this section, effective April 23, 1994, is removed.

(35) On June 21, 2004, the Alaska Department of Environmental Conservation submitted a carbon monoxide maintenance plan and requested the redesignation of Fairbanks to attainment for carbon monoxide. The State's maintenance plan and the redesignation request meet the requirements of the Clean Air Act.

(i) *Incorporation by reference.* (A) 18AAC50.015, Air quality designations, classifications, and control regions, as in effect June 24, 2004.

(B) Assembly Ordinance No. 2003–71—An Ordinance amending the Carbon Monoxide Emergency Episode Prevention Plan including implementing a Woodstove Control Ordinance, adopted October 30, 2003.

(36) On May 6, 2005 and June 30, 2006, the Alaska Department of Environmental Conservation (ADEC) submitted amendments to ADEC's air quality regulations, as revision to the State of Alaska Implementation Plan.

(i) Incorporation by reference.

(A) The following new and revised sections of ADEC's air quality regulations:

(*1*) 18 AAC 50.080 Ice Fog Standards; State effective January 18, 1997.

(*2*) 18 AAC 50.025 Visibility and Other Special Protection Areas; 18 AAC 50.070 Marine Vessel Visible Emission Standards. All provisions in this paragraph are State effective June 21, 1998.

(*3*) 18 AAC 50.050 Incinerator Emission Standards; State effective May 3, 2002.

(*4*) 18 AAC 50.005 Purpose of Chapter; 18 AAC 50.010 Ambient Air Quality Standards [except (7) and (8)]; 18 AAC 50.015 Air Quality Designations, Classifications, and Control Regions; 18 AAC 50.020 Baseline Dates and Maximum Allowable Increases, 18 AAC 50.045 Prohibitions; 18 AAC 50.055 Industrial Processes and Fuel-Burning Equipment [except (d)(2)(B)]; 18 AAC 50.100 Nonroad Engines; 18 AAC 50.200 Information Requests; 18 AAC 50.201 Ambient Air Quality Investigation; 18 AAC 50.205 Certification; 18 AAC 50.215 Ambient Air Quality Analysis Methods [except (a)(3)]; 18 AAC 50.220 Enforceable Test Methods [except (c)(2)]; 18 AAC 50.245 Air Episodes and Advisories; 18 AAC 50.250 Procedures and Criteria for Revising Air Quality Classifications; 18 AAC 50.301 Permit Continuity; 18 AAC 50.302 Construction Permits; 18 AAC 50.306 Prevention of Significant Deterioration (PSD) Permits [except (b)(2) and (b)(3)]; 18 AAC 50.311 Nonattainment Area Major Stationary Source Permits; 18 AAC 50.345 Construction and Operating Permits: Standard Permit Conditions [except (b), (c)(3), and (l)]; 18 AAC 50.508 Minor Permits Requested by the Owner or Operator [except (1) and (2)]; 18 AAC 50.546 Minor Permits: Revisions [except (b)]; 18 AAC 50.560 General Minor Permits; 18 AAC 50.900 Small Business. All provisions in this paragraph are State effective October 1, 2004.

(*5*) 18 AAC 50.542 Minor Permit: Review and Issuance [except (b)(2), (f)(4), (f)(5), and (g)(1) but only with respect to clean units and pollution control projects]; State effective December 1, 2004.

(*6*) 18 AAC 50.225 Owner-Requested Limits; 18 AAC 50.230 Preapproved Emission Limits [except (d)]; 18 AAC 50.544 Minor Permits: Content [except (e)]. All provisions in this paragraph are State effective January 29, 2005.

(*7*) 18 AAC 50.035 Documents, Procedures, and Methods Adopted By Reference [except (b)(4)]; 18 AAC 50.040 Federal Standards Adopted by Reference [except (a), (b), (c), (d), (e), (g), (h)(17), (h)(18), (h)(19), (i)(7), (i)(8), (i)(9), and (j)]; 18 AAC 50.502 Minor Permits for Air Quality Protection [except (g)(1) and (g)(2)]; 18 AAC 50.540 Minor Permit: Application [except (f) and (g)];18 AAC 50.990 Definitions [except (21), and (77)]. All provisions in this paragraph are State effective December 3, 2005.

(B) Remove the following provisions from the current incorporation by reference:

(*1*) 18 AAC 50.030 State Air Quality Control Plan; State effective September 21, 2001.

(*2*) 18 AAC 50.035 (b)(4) Documents, Procedures and Methods Adopted by Reference; State Effective January 18, 1997.

(*3*) 18 AAC 50.090 Ice Fog Limitations; State effective May 26, 1972.

(*4*) 18 AAC 50.220(c)(2) Enforceable Test Methods; State effective January 18, 1997.

(*5*) 18 AAC 50.300 Permit to Operate and 18 AAC 50.400 Application Review & Issuance of Permit to Operate. The provisions in this paragraph were State effective July 21, 1991 and April 23, 1994.

(*6*) 18 AAC 50.520 Emissions and Ambient Monitoring; State effective July 21, 1991.

(*7*) 18 AAC 50.530 Circumvention; State effective June 7, 1987.

(*8*) 18 AAC 50.310 Revocation or Suspension of Permit; State effective May 4, 1980.

(*9*) 18 AAC 50.400 Permit Administration Fees; 18 AAC 50.420 Billing Procedures; and 18 AAC 50.430 Appeal Procedures. The provisions of this paragraph were State effective January 18, 1997.

(*10*) 18 AAC 50.600 Reclassification Procedures & Criteria; State effective November 1, 1982.

(*11*) 18 AAC 50.620 State Air Quality Control Plan; State effective January 4, 1995.

(*12*) 18 AAC 50.900 Definitions; State effective July 21, 1991 and January 4, 1995.

(ii) Additional Material.

(A) The following section of ADEC's air quality regulations: 18 AAC 50.030 State Air Quality Control Plan, State effective October 1, 2004.

(37) On March 29, 2002, December 11, 2006 and June 5, 2008 the Alaska Department of Environmental Conservation submitted revisions to the SIP approved inspection and maintenance program for Carbon Monoxide. The SIP revisions meet the requirements of the Clean Air Act.

(i) *Incorporation by reference.*

(A) The following new and revised sections of ADEC's air quality regulations:

(1) 18 AAC 50.030 Air Quality Control as in effect May 17, 2008.

(2) 18 AAC 52 Emissions Inspection and Maintenance Requirements for Motor Vehicles as in effect May 17, 2008.

(3) AO 2006–13 an ordinance amending Anchorage Municipal Code chapters 15.80 and 15.85 to comply with State I/M regulations and to comply with DMV Electronic Procedures January 24, 2006 and Chapters 15.80 and 15.85 of the Anchorage Municipal Code as approved February 14, 2006.

(ii) Additional material

(A) The following revised sections of Alaska's air quality regulations:

(1) State Air Quality Control Plan—Vol. II Analysis of Problems, Control Actions, Section II: Air Quality Program, April 4, 2008

(2) State Air Quality Control Plan—Vol. II Analysis of Problems, Control Actions, Section III.A. Statewide Carbon Monoxide Control Program, April 4, 2008

(3) State Air Quality Control Plan—Vol. II Analysis of Problems, Control Actions, Section III.C. Fairbanks Transportation Control Program, April 4, 2008

(4) Amendments to State Air Quality Control Plan, Vol. III Appendices (Appendix III.A.2 and Appendix to III.C.3), April 4, 2008

(5) State Air Quality Control Plan—Vol. II Analysis of Problems, Control Actions, Section III.B. Anchorage Transportation Control Program, September 19, 2006

(6) Vol. III. Appendix to Vol. II, Sec II, September 19, 2006

(7) Vol. III. Appendix to Vol. II, Sec III.A, September 19, 2006

(8) Vol. III. Appendix to Vol. II, Sec III.B, September 19, 2006

(9) Vol. III. Appendix to Vol. II, Sec III.C, September 19, 2006

(38) On November 19, 2010, the Alaska Department of Environmental Conservation (ADEC) submitted a revision to the State of Alaska Implementation Plan that adds a definition of ''Subject to regulation'' as it applies to greenhouse gases in Alaska's Prevention of Significant Deterioration (PSD) permit rule.

(i) *Incorporation by reference.* (A) The following section of ADEC's air quality regulations: The incorporation by reference date for 40 CFR 52.21 in 18 AAC 50.040(h), introductory paragraph, but only with respect to its incorporation by reference of the definition of ''Subject to regulation'' in 40 CFR 52.21(b)(49) for the purpose of greenhouse gases only; State effective December 9, 2010.

(39) On April 9, 2010, the Alaska Department of Environmental Conservation (ADEC) submitted a revision to the Alaska State Implementation Plan (SIP) to update the SIP to include the 2008 ozone standard at an 8-hour averaging period, the associated federal method for measuring and monitoring ozone in ambient air, and a general definition of ozone.

(i) *Incorporation by reference.* (A) The following revised sections of Alaska Administrative Code Title 18: Chapter 50, effective April 1, 2010:

(*1*) Article 1, Ambient Air Quality Management: Rule 010 Ambient Air Quality Standards, the undesignated introductory text, and (4); Rule 035 Documents, procedures, and methods adopted by reference, (b) the undesignated introductory text, and (b)(1), but only with respect to the incorporation by reference of 40 CFR part 50, Appendix P;

(*2*) Article 2, Program Administration: Rule 215 Ambient Air Quality Analysis Methods, (a) introductory text, and (a)(2);

(*3*) Article 9, General Provisions, Rule 990 Definitions, (129).

(40) On November 19, 2010, and July 9, 2012, the Alaska Department of Environmental Conservation (ADEC) submitted revisions to the Alaska State Implementation Plan (SIP) to update the SIP to include federal Prevention of Significant Deterioration (PSD) program changes to regulate NO_X as a precursor to ozone, and provisions to satisfy CAA section 128 conflict of interest disclosure requirements.

(i) *Incorporation by reference.* (A) The following revised sections of Alaska Administrative Code Title 18, Chapter 50, effective December 9, 2010:

(*1*) Article 1, Ambient Air Quality Management: Rule 040 Federal standards adopted by reference, (h) the undesignated introductory text, only with respect to 40 CFR Part 52 and (h)(4), only with respect to the incorporation by reference date for ''significant'' at 40 CFR 52.21(b)(23)(i);

(*2*) Article 9, General Provisions, Rule 990 Definitions, (52)(A), ''major stationary source,'' (53)(A), ''major modification,'' and (92), ''regulated NSR pollutant.''

(ii) *Additional material.* (A) The following sections of Alaska Administrative Code Title 2 and Title 9, effective February 20, 2005:

(*1*) Title 2, Administration: Chapter 50, Alaska Public Offices Commission: Conflict of Interest, Campaign Disclosure, Legislative Financial Disclosure, and Regulations of Lobbying; Article 1, Public Official Financial Disclosure (2 AAC 50.010–2 AAC 50.200);

(*2*) Title 9, Law: Chapter 52, Executive Branch Code of Ethics (9 AAC 52.010–9 AAC 52.990).

(41) On April 4, 2011, the Alaska Department of Environmental Conservation submitted a SIP revision to meet the regional haze requirements of Clean Air Act sections 169A and 169B, and Federal Regulations 40 CFR 51.308, to implement a regional haze program in the State of Alaska for the first planning period through July 31, 2018.

(i) Incorporation by reference.

(A) The following revised section of the Alaska Administrative Rules: Alaska Department of Environmental Conservation, 18 AAC 50.260, ''Guidelines for Best Available Retrofit Technology under the Regional Haze Rule'', state effective date December 30, 2007.

(ii) Additional material.

(A) The following section of ADEC's air quality control regulations: 18 AAC 50.030 State Air Quality Control Plan; state effective date February 11, 2011;

Volume II, Section III. F. Open Burning; and Volume II, Section III. K. Area Wide Pollution Control Program for Regional Haze.

(42) On May 14, 2009, the Alaska Department of Environmental Conservation submitted a PM_{10} limited maintenance plan and requested the redesignation of the Mendenhall Valley to attainment for PM_{10}. The state's limited maintenance plan and redesignation request meet the requirements of the Clean Air Act.

(i) Incorporation by reference.

(A) Alaska Administrative Code, Title 18, Chapter 50 Air Quality Control, Section 075 ''Wood-fired heating devise visible emission standards,'' effective May 6, 2009.

(B) Alaska Department of Environmental Conservation State Air Quality Control Plan, Volume III, Appendix III.D.3.5, Ordinance of the City and Borough of Juneau, Alaska, Serial No. 2008–28, adopted February 20, 2009

[37 FR 10848, May 31, 1972. Redesignated at 79 FR 19822, Apr. 10, 2014]

EDITORIAL NOTE: For FEDERAL REGISTER citations affecting § 52.74, see the List of CFR Sections Affected, which appears in the Finding Aids section of the printed volume and at *www.fdsys.gov*.

§52.75 [Reserved]

§ 52.76 1990 Base Year Emission Inventory.

(a) EPA approves as a revision to the Alaska State Implementation Plan the 1990 Base Year Carbon Monoxide Emission Inventory for the Anchorage and Fairbanks areas designated as nonattainment for CO, submitted by the Alaska Department of Environmental Conservation on December 29, 1993. This submittal consists of the 1990 base year stationary, area, non-road mobile, and on-road mobile sources for the pollutant carbon monoxide.

(b) EPA approves a revision to the Alaska State Implementation Plan, submitted on December 5, 1994, of the on-road mobile source portion of the 1990 Base Year Emission Inventory for Carbon Monoxide in Anchorage and Fairbanks.

[62 FR 6132, Feb. 11, 1997, as amended at 63 FR 50764, Sept. 23, 1998]

§§ 52.77–52.81 [Reserved]

§ 52.82 Extensions.

The Administrator, by authority delegated under section 186(a)(4) of the Clean Air Act, as amended in 1990, hereby extends for one year (until December 31, 1996) the attainment date for the MOA, Alaska CO nonattainment area.

[61 FR 33678, June 28, 1996]

§§ 52.83–52.95 [Reserved]

§ 52.96 Significant deterioration of air quality.

(a) The State of Alaska Department of Environmental Conservation Air Quality Control Regulations are approved as meeting the requirements of 40 CFR 51.166 and part C for preventing significant deterioration of air quality. The specific provisions approved are: 18 AAC 50.010 except (7) and (8); 18 AAC 50.015; 18 AAC 50.020; 18 AAC 50.035(a)(4), (a)(5), and (b)(1); 18 AAC 50.040(h); and 18 AAC 50.215 except (a)(4) as in effect on April 17, 2015; 18 AAC 50.990 as in effect on November 9, 2014; 18 AAC 50.306 as in effect on January 4, 2013; 18 AAC 50.345 except (b), (c)(3), and (l) as in effect on September 14, 2012; and 18 AAC 50.250 as in effect on October 1, 2004.

(b) The requirements of sections 160 through 165 of the Clean Air Act are not met for Indian reservations since the plan does not include approvable provisions for preventing the significant deterioration of air quality on Indian reservations and, therefore, the provisions of § 52.21 except paragraph (a)(1) are hereby incorporated and made part of the applicable plan for Indian reservations in the State of Alaska.

[72 FR 45380, Aug. 14, 2007, as amended at 76 FR 7117, Feb. 9, 2011; 77 FR 64427, Oct. 22, 2012; 79 FR 56274, Sept. 19, 2014; 81 FR 31513, May 19, 2016]

§§ 52.97–52.98 [Reserved]

Subpart D—Arizona

§ 52.119 Identification of plan—conditional approvals.

This section identifies plan revisions that are conditionally approved based

upon commitments received from the State.

(a) A plan revision for the Arizona Department of Environmental Quality (ADEQ) submitted April 28, 2017, by the Governor's designee, updating ADEQ's Clean Air Act (CAA) new source review (NSR) program only with respect to the CAA requirements related to ammonia as a precursor to $PM_{2.5}$ under the nonattainment NSR program requirements in CAA section 189(e). This plan revision is conditionally approved as follows:

(1) The conditional approval is based upon the December 6, 2017 commitment from the State to submit a SIP revision to the EPA by March 31, 2019 consisting of rule revisions and/or demonstrations that will correct the deficiencies identified with this submittal, as specified in ADEQ's December 6, 2017 commitment letter. If the State fails to meet its commitment by March 31, 2019, the conditional approval will be treated as a disapproval only with respect to the CAA requirements related to ammonia as a precursor to $PM_{2.5}$ under the nonattainment NSR program requirements in CAA section 189(e).

(2) [Reserved]

(b) [Reserved]

[83 FR 19635, May 4, 2018]

§ 52.120 Identification of plan.

(a) *Purpose and scope.* This section sets forth the applicable State implementation plan for the State of Arizona under section 110 of the Clean Air Act, 42 U.S.C. 7401–7671q and 40 CFR part 51 to meet national ambient air quality standards.

(b) *Incorporation by reference.*

(1) Material listed in in paragraphs (c) and (d) of this section with an EPA approval date prior to June 30, 2016, was approved for incorporation by reference by the Director of the Federal Register in accordance with 5 U.S.C. 552(a) and 1 CFR part 51. Entries in paragraphs (c) and (d) of this section with the EPA approval dates after June 30, 2016 have been approved by EPA for inclusion in the State implementation plan and for incorporation by reference into the plan as it is contained in this section, and will be considered by the Director of the Federal Register for approval in the next update to the SIP compilation.

(2) EPA Region IX certifies that the materials provided by EPA at the addresses in paragraph (b)(3) of this section are an exact duplicate of the officially promulgated state rules/regulations which have been approved as part of the state implementation plan as of the dates referenced in paragraph (b)(1).

(3) Copies of the materials incorporated by reference into the state implementation plan may be inspected at the Region IX EPA Office at 75 Hawthorne Street, San Francisco, CA 94105; or the National Archives and Records Administration (NARA). To obtain the material, please call the Regional Office. You may also inspect the material with an EPA approval date prior to June 30, 2016 at the National Archives and Records Administration (NARA). For information on the availability of this material at NARA, go to: *http://www.archives.gov/federal-register/cfr/ibr-locations.html.*

(c) *EPA-approved regulations.*

TABLE 1—EPA-APPROVED ARIZONA STATUTES

State citation	Title/subject	State effective date	EPA approval date	Additional explanation
ARIZONA REVISED STATUTES [1] Title 9 (Cities and Towns) Chapter 4 (General Powers) Article 8 (Miscellaneous)				
9–500.03	Air quality control ...	May 22, 1987	August 10, 1988, 53 FR 30224; vacated; restored on January 29, 1991, 56 FR 3219.	Approval only included subsection A, paragraphs 1 and 2, subsection B. Submitted on March 23, 1988. Senate Bill 1360, section 2.†
9–500.04, excluding paragraphs A.1, A.2, A.4, and A.10; paragraphs B through G; and paragraph I..	Air quality control; definitions.	September 19, 2007.	December 3, 2013, 78 FR 72579.	Arizona Revised Statutes (Thomson/West, 2008). Submitted on May 25, 2012. ADEQ clarified and revised the May 25, 2012 submittal by letter dated September 26, 2013.
9–500.27, excluding paragraphs D and E. =.	Off-road vehicle ordinance; applicability; violation; classification.	September 19, 2007.	March 31, 2014, 79 FR 17878.	Arizona Revised Statutes (Thomson/West, 2008). Submitted on May 25, 2012. ADEQ clarified and revised the May 25, 2012 submittal by letter dated September 26, 2013.
Title 11 (Counties) Chapter 6 (County Planning and Zoning) Article 6 (Air Quality)				
11–871, excluding paragraphs C through E..	Emissions control; no burn; exemptions; penalty.	September 19, 2007.	March 31, 2014, 79 FR 17878.	Arizona Revised Statutes (West, 2012). Submitted on May 25, 2012. ADEQ clarified and revised the May 25, 2012 submittal by letter dated September 26, 2013.
11–877	Air quality control measures.	September 19, 2007.	December 3, 2013, 78 FR 72579.	Arizona Revised Statutes (West, 2012). Submitted on May 25, 2012. ADEQ clarified and revised the May 25, 2012 submittal by letter dated September 26, 2013.

TABLE 1—EPA-APPROVED ARIZONA STATUTES—Continued

State citation	Title/subject	State effective date	EPA approval date	Additional explanation
Title 28 (Transportation) Chapter 3 (Traffic and Vehicle Regulation) Article 18 (Vehicle Size, Weight and Load)				
28–1098, excluding paragraphs B and C.	Vehicle loads; restrictions; civil penalties.	September 19, 2007.	March 31, 2014, 79 FR 17878.	Arizona Revised Statutes (West, 2012). Submitted on May 25, 2012. ADEQ clarified and revised the May 25, 2012 submittal by letter dated September 26, 2013.
Title 36 (Public Health and Safety) Chapter 14 (Air Pollution) Article 3 (Annual Emissions Inspection of Motor Vehicles)				
36–1776	Fleet Emissions Inspection Stations; Certificates of Inspection; Dealer's Inventory; Investigations; Revocation of Permit..	January 1, 1981	June 18, 1982, 47 FR 26382.	Submitted on August 5, 1981.
36–1777	Authority of Director to Acquire Enforcement Equipment; Random Vehicle Tests..	January 1, 1981	June 18, 1982, 47 FR 26382.	Submitted on August 5, 1981.
36–1778	Improper Representation..	January 1, 1981	June 18, 1982, 47 FR 26382.	Submitted on August 5, 1981.
36–1779	False Certificates	January 1, 1981	June 18, 1982, 47 FR 26382.	Submitted on August 5, 1981.
Title 41 (State Government) Chapter 15 (Department of Weights and Measures) Article 1 (General Provisions)				
41–2051 (6), (10), (11), (12), and (13).	Definitions—"Certification," "Department," "Diesel fuel," "Director," and "E85".	September 26, 2008.	June 13, 2012, 77 FR 35279.	Laws 2008, Ch. 254, § 2. Submitted on September 21, 2009.

TABLE 1—EPA-APPROVED ARIZONA STATUTES—Continued

State citation	Title/subject	State effective date	EPA approval date	Additional explanation
Article 3 (Method of Sale of Commodities and Services)				
41–2083	Standards for liquid fuels; exceptions.	July 18, 1996	June 8, 2000, 65 FR 36353; corrected March 18, 2004, 69 FR 12802.	Senate Bill 1002, section 26. In connection with approval of 1996 Carbon Monoxide Limited Maintenance Plan for the Tucson Air Planning Area (as updated August 1997). Previous versions approved in connection with the Maricopa County Ozone Plan.
Article 5 (Regulation)				
41–2113(B)(4)	Violation; classification; jurisdiction.	August 21, 1998	March 4, 2004, 69 FR 10161..	Last amended Laws 1998, Ch. 146, § 16. Submitted on January 22, 2004.
41–2115	Civil Penalties	July 18, 2000	March 4, 2004, 69 FR 10161..	Last amended Laws 2000, Ch. 193, § 463. Submitted on January 22, 2004.
Article 6 (Motor Fuel)				
41–2121	Definitions	May 18, 1999	June 8, 2000, 65 FR 36353..	Submitted on September 1, 1999. House Bill 2189, section 9. The definition of ''gasoline'' was superseded at 77 FR 35279 (September 19, 2007)
41–2121(5)	Definitions [''Gasoline''].	September 19, 2007.	June 13, 2012, 77 FR 35279.	Laws 2007, Ch. 292, § 11. Submitted on September 21, 2009.
41–2122	Standards for oxygenated fuel; volatility exceptions.	July 18, 1996	June 8, 2000, 65 FR 36353; corrected March 18, 2004, 69 FR 12802.	Senate Bill 1002, section 27. In connection with approval of 1996 Carbon Monoxide Limited Maintenance Plan for the Tucson Air Planning Area (as updated August 1997).

TABLE 1—EPA-APPROVED ARIZONA STATUTES—Continued

State citation	Title/subject	State effective date	EPA approval date	Additional explanation
41–2123	Area A; sale of gasoline; oxygen content.	August 6, 1999	March 4, 2004, 69 FR 10161.	Last amended Laws 1999, Ch. 295, § 11. Submitted on January 22, 2004.
41–2124	Area A; fuel formulation; rules.	July 18, 2000	March 4, 2004, 69 FR 10161.	Last amended Laws 2000, Ch. 405, § 21. Submitted on January 22, 2004.
41–2125	Area B; sale of gasoline; oxygen content.	July 18, 1996	June 8, 2000, 65 FR 36353; corrected March 18, 2004, 69 FR 12802.	Senate Bill 1002, section 28. In connection with approval of 1996 Carbon Monoxide Limited Maintenance Plan for the Tucson Air Planning Area (as updated August 1997).
Article 7 (Gasoline Vapor Control)				
41–2131	Definitions	April 22, 2014	November 16, 2015, 80 FR 70689.	House Bill 2128, section 5, effective through September 29, 2018. Includes the text that appears in all capital letters and excludes the text that appears in strikethrough. Submitted on September 2, 2014.
41–2131	Definitions	April 22, 2014	November 16, 2015, 80 FR 70689.	House Bill 2128, section 6, effective from and after September 30, 2018. Includes the text that appears in all capital letters and excludes the text that appears in strikethrough. Submitted on September 2, 2014.

TABLE 1—EPA-APPROVED ARIZONA STATUTES—Continued

State citation	Title/subject	State effective date	EPA approval date	Additional explanation
41–2132	Stage I vapor recovery systems.	April 22, 2014	November 16, 2015, 80 FR 70689.	House Bill 2128, section 7. Includes the text that appears in all capital letters and excludes the text that appears in strikethrough. Submitted on September 2, 2014.
41–2133	Compliance schedules.	April 22, 2014	November 16, 2015, 80 FR 70689.	House Bill 2128, section 8. Includes the text that appears in all capital letters and excludes the text that appears in strikethrough. Submitted on September 2, 2014.
41–2135	Stage II vapor recovery systems.	April 22, 2014	November 16, 2015, 80 FR 70689.	House Bill 2128, section 10. Includes the text that appears in all capital letters and excludes the text that appears in strikethrough. Submitted on September 2, 2014. *ARS 41–2135 is repealed from and after September 30, 2018 pursuant to section 11 of House Bill 2128.*
Title 49 (The Environment) Chapter 1 (General Provisions)				
49–107	Local delegation of state authority.	July 1, 1987	November 2, 2015, 80 FR 67319.	Submitted on October 29, and supplemented on September 6, 2013 and July 2, 2014.
Chapter 3 (Air Quality) Article 1 (General Provisions)				
49–401.01	Definitions	May 18, 1999	June 8, 2000, 65 FR 36353.	Submitted on September 1, 1999. House Bill 2189, section 40.

TABLE 1—EPA-APPROVED ARIZONA STATUTES—Continued

State citation	Title/subject	State effective date	EPA approval date	Additional explanation
Article 2 (State Air Pollution Control)				
49–454	Adjusted work hours.	May 18, 1999	June 8, 2000, 65 FR 36353.	Submitted on September 1, 1999. House Bill 2189, section 43.
49–457	Agricultural best management practices committee; members; powers; permits; enforcement; preemption; definitions.	May 29, 1998	June 29, 1999, 64 FR 34726.	Submitted on September 4, 1998.
49–457.01	Leaf blower use restrictions and training; leaf blowers equipment sellers; informational material; outreach; applicability.	September 19, 2007.	December 3, 2013, 78 FR 72579.	Arizona Revised Statutes (Thomson/West, 2005 mail volume, 2012 cumulative pocket part). Submitted on May 25, 2012. ADEQ clarified and revised the May 25, 2012 submittal by letter dated September 26, 2013.
49–457.03, excluding paragraphs C and D.	Off-road vehicles; pollution advisory days; applicability; penalties.	September 19, 2007.	March 31, 2014, 79 FR 17878.	Arizona Revised Statutes (West, 2012 Cumulative Pocket Part). Submitted on May 25, 2012. ADEQ clarified and revised the May 25, 2012 submittal by letter dated September 26, 2013.
49–457.04	Off-highway vehicle and all-terrain vehicle dealers; informational material; outreach; applicability.	September 19, 2007.	March 31, 2014, 79 FR 17878.	Arizona Revised Statutes (West, 2012 Cumulative Pocket Part). Submitted on May 25, 2012. ADEQ clarified and revised the May 25, 2012 submittal by letter dated September 26, 2013.

TABLE 1—EPA-APPROVED ARIZONA STATUTES—Continued

State citation	Title/subject	State effective date	EPA approval date	Additional explanation
49–457.05, excluding paragraph C and paragraphs E, F, G, and H.	Dust action general permit; best management practices; applicability; definitions.	July 20, 2011	March 31, 2014, 79 FR 17879.	Arizona Revised Statutes (West, 2012 Cumulative Pocket Part). Submitted on May 25, 2012. ADEQ clarified and revised the May 25, 2012 submittal by letter dated September 26, 2013.
Article 3 (County Air Pollution Control)				
49–474.01	Additional board duties in nonattainment areas.	May 22, 1987	August 10, 1988, 53 FR 30224; vacated; restored on January 29, 1991, 56 FR 3219.	Submitted on March 23, 1988. Senate Bill 1360, section 18.†
49–474.01, excluding paragraphs A.1 through A.3, A.9, A.10; paragraphs C through G, and paragraph I.	Additional board duties in vehicle emissions control areas; definitions.	September 19, 2007.	December 3, 2013, 78 FR 72579.	Arizona Revised Statutes (Thomson/West, 2005 mail volume, 2012 cumulative pocket part). Submitted on May 25, 2012. ADEQ clarified and revised the May 25, 2012 submittal by letter dated September 26, 2013.
49–474.05	Dust control; training; site coordinators.	September 19, 2007.	December 3, 2013, 78 FR 72579.	Arizona Revised Statutes (Thomson/West, 2005 mail volume, 2012 cumulative pocket part). Submitted on May 25, 2012. ADEQ clarified and revised the May 25, 2012 submittal by letter dated September 26, 2013.
49–474.06	Dust control; subcontractor registration; fee.	September 19, 2007.	December 3, 2013, 78 FR 72579.	Arizona Revised Statutes (Thomson/West, 2005 mail volume, 2012 cumulative pocket part). Submitted on May 25, 2012. ADEQ clarified and revised the May 25, 2012 submittal by letter dated September 26, 2013.

TABLE 1—EPA-APPROVED ARIZONA STATUTES—Continued

State citation	Title/subject	State effective date	EPA approval date	Additional explanation
49–501, excluding paragraph A.1, paragraphs B.2 through B.6, and paragraphs D, E, G, and H.	Unlawful open burning; exceptions; civil penalty; definition.	September 19, 2007.	March 31, 2014, 79 FR 17878.	Arizona Revised Statutes (West, 2012 Cumulative Pocket Part). Submitted on May 25, 2012. ADEQ clarified and revised the May 25, 2012 submittal by letter dated September 26, 2013.
49–506	Voluntary No-drive Days.	June 28, 1988	August 10, 1988, 53 FR 30224; vacated; restored on January 29, 1991, 56 FR 3219.	Submitted on July 18, 1988. House Bill 2206, section 17.†
Article 5 (Annual Emissions Inspection of Motor Vehicles)				
49–541	Definitions	May 18, 1999	June 8, 2000, 65 FR 36353 and also January 22, 2003, 68 FR 2912.	Submitted on September 1, 1999. House Bill 2189, 44th Legislature, 1st Regular Session (1999), section 44. Approved in rulemakings related to the Tucson carbon monoxide plan and Arizona VEI Program.
49–541, subsection (1).	Definitions [“Area A”].	August 9, 2001	May 22, 2013, 78 FR 30209.	Submitted on May 25, 2012. Arizona Revised Statutes (West Group, 2001 Cumulative Pocket Part). Supported by an affidavit signed by Barbara Howe, Law Reference Librarian, Arizona State Library, Archives and Public Records on May 3, 2012, certifying authenticity of reproduction of A.R.S. § 49–451 (*sic*)(corrected to § 49–541 (2001 pocket part).

TABLE 1—EPA-APPROVED ARIZONA STATUTES—Continued

State citation	Title/subject	State effective date	EPA approval date	Additional explanation
49–541.01, paragraphs D and E.	Vehicle emissions inspection program; constant four wheel drive vehicles; requirements; location; violation; classification; penalties; new program termination.	May 18, 1999	March 9, 2005, 70 FR 11553.	Submitted on April 18, 2001 as part of the Revised MAG 1999 Serious Area Carbon Monoxide Plan for the Maricopa County Nonattainment Area, dated March 2001. Submitted as section 2 of H.B. 2254 (1999).
49–542	Emissions inspection program; powers and duties of director; administration; periodic inspection; minimum standards and rules; exceptions; definition.	June 21, 2013	May 22, 2013, 78 FR 30209.	Submitted on November 6, 2009. Arizona Revised Statutes (Thomson West, 2008 Cumulative Pocket Part). Supported by an affidavit signed by Efrem K. Sepulveda, Law Librarian, Arizona State Library, Archives and Public Records on January 11, 2013, certifying authenticity of reproduction of A.R.S. § 49–542 (2008 edition) plus title page to pocket part of Title 49 (2008 edition).
49–542.05	Alternative fuel vehicles.	December 14, 2000	January 22, 2003, 68 FR 2912.	Submitted on July 6, 2001. Senate Bill 1004, 44th Legislature, 7th Special Session (2000), section 23. Related to VEI Program.
49–543	Emissions inspection costs; disposition; fleet inspection; certificates.	May 7, 2001	January 22, 2003, 68 FR 2912.	Submitted on April 10, 2002. House Bill 2538, 45th Legislature, 1st Regular Session (2001), section 11. Related to VEI Program.
49–544	Emissions inspection fund; composition; authorized expenditures; exemptions; investment.	May 20, 1998	January 22, 2003, 68 FR 2912.	Submitted on July 6, 2001. Senate Bill 1007, 43rd Legislature, 4th Special Session (1998), section 15. Related to VEI Program.

TABLE 1—EPA-APPROVED ARIZONA STATUTES—Continued

State citation	Title/subject	State effective date	EPA approval date	Additional explanation
49–545	Agreement with independent contractor; qualifications of contractor; agreement provisions.	April 28, 2000	January 22, 2003, 68 FR 2912.	Submitted on July 6, 2001. House Bill 2104, 44th Legislature, 2nd Regular session (2000), section 5. Related to VEI Program.
49–550	Violation; Classification; Civil Penalty.	June 28, 1988	August 10, 1988, 53 FR 30224; vacated; restored on January 29, 1991, 56 FR 3219.	Submitted on July 18, 1988. House Bill 2206, section 19.†
49–551	Air quality fee; air quality fund; purpose.	May 29, 1998	January 22, 2003, 68 FR 2912.	Submitted on July 6, 2001. Senate Bill 1427, 43rd Legislature, 2nd Regular Session (1998), section 27. Related to VEI Program.
49–552	Enforcement on city, town, county, school district or special district property.	June 1, 1998	March 9, 2005, 70 FR 11553.	Submitted on April 18, 2001 as part of the Revised MAG 1999 Serious Area Carbon Monoxide Plan for the Maricopa County Nonattainment Area, dated March 2001. Submitted as amended in section 28 of S.B. 1427 (1998).
49–553	Reports to the Legislature by Department of Environmental Quality.	June 28, 1988	August 10, 1988, 53 FR 30224; vacated; restored on January 29, 1991, 56 FR 3219.	Submitted on July 18, 1988. House Bill 2206, section 21.†
49–557	Government vehicles; emissions inspections; noncompliance; vehicle operation privilege suspension.	January 1, 2002	June 8, 2000, 65 FR 36353.	Submitted on September 1, 1999. House Bill 2254, section 5. Effective date set in section 8 of House Bill 2254.
Article 7 (Emissions Control)				
49–571	Clean burning alternative fuel requirements for new buses; definition.	May 18, 1999	June 8, 2000, 65 FR 36353.	Submitted on September 1, 1999. House Bill 2189, section 46.

TABLE 1—EPA-APPROVED ARIZONA STATUTES—Continued

State citation	Title/subject	State effective date	EPA approval date	Additional explanation
49–573	Emissions controls; federal vehicles; definition.	January 1, 2002	June 8, 2000, 65 FR 36353.	Submitted on September 1, 1999. House Bill 2254, section 6. Effective date set in section 8 of House Bill 2254.
Article 8 (Travel Reduction Programs)				
49–581	Definitions	December 31, 1988	August 10, 1988, 53 FR 30224; vacated; restored on January 29, 1991, 56 FR 3219.	Submitted on July 18, 1988. House Bill 2206, section 23. House Bill section 25 lowered the threshold defining "major employer" from 500 or more employers between December 31, 1988-September 30, 1989, to 200 or more from September 30, 1989-December 31, 1989, to 100 or more thereafter. Delayed effective date per section 29 of HB 2206.†
49–582	Travel Reduction Program Regional Task Force; Composition.	December 31, 1988	August 10, 1988, 53 FR 30224; vacated; restored on January 29, 1991, 56 FR 3219.	Submitted on July 18, 1988. House Bill 2206, section 23. Delayed effective date per section 29 of HB 2206.†
49–583	Duties and Powers of the Task Force.	December 31, 1988	August 10, 1988, 53 FR 30224; vacated; restored on January 29, 1991, 56 FR 3219.	Submitted on July 18, 1988. House Bill 2206, section 23. Delayed effective date per section 29 of HB 2206.†
49–584	Staff Duties	December 31, 1988	August 10, 1988, 53 FR 30224; vacated; restored on January 29, 1991, 56 FR 3219.	Submitted on July 18, 1988. House Bill 2206, section 23. Delayed effective date per section 29 of HB 2206.†
49–585	Powers and Duties of the Board.	December 31, 1988	August 10, 1988, 53 FR 30224; vacated; restored on January 29, 1991, 56 FR 3219.	Submitted on July 18, 1988. House Bill 2206, section 23. Delayed effective date per section 29 of HB 2206.†

TABLE 1—EPA-APPROVED ARIZONA STATUTES—Continued

State citation	Title/subject	State effective date	EPA approval date	Additional explanation
49–586	Enforcement by Cities or Towns.	December 31, 1988	August 10, 1988, 53 FR 30224; vacated; restored on January 29, 1991, 56 FR 3219.	Submitted on July 18, 1988. House Bill 2206, section 23. Delayed effective date per section 29 of HB 2206.†
49–588	Requirements for Major Employers.	December 31, 1988	August 10, 1988, 53 FR 30224; vacated; restored on January 29, 1991, 56 FR 3219.	Submitted on July 18, 1988. House Bill 2206, section 23. Delayed effective date per section 29 of HB 2206.†
49–590	Requirements for High Schools.	December 31, 1988	August 10, 1988, 53 FR 30224; vacated; restored on January 29, 1991, 56 FR 3219.	Submitted on July 18, 1988. House Bill 2206, section 23.†
49–593	Violations; Civil Penalties.	December 31, 1988	August 10, 1988, 53 FR 30224; vacated; restored on January 29, 1991, 56 FR 3219.	Submitted on July 18, 1988. House Bill 2206, section 23. Delayed effective date per section 29 of HB 2206.†

[1] The statutory provisions listed in table 1 of paragraph (c) are considered regulatory. Other statutory provisions are considered nonregulatory and are listed in table 3 of paragraph (e).

† Vacated by the U.S. Court of Appeals for the Ninth Circuit in *Delaney* v. EPA, 898 F.2d 687 (9th Cir. 1990). Restored on January 29, 1991, 56 FR 3219.

TABLE 2—EPA-APPROVED ARIZONA REGULATIONS

State citation	Title/subject	State effective date	EPA approval date	Additional explanation
ARIZONA ADMINISTRATIVE CODE Title 9 (Health Services) Chapter 3				
Article 1				
R9–3–101	Definitions [''Begin actual construction''].	May 28, 1982	May 3, 1983, 48 FR 19878.	Included 36 defined terms. All but one (''Begin actual construction'') have been superseded by subsequent approvals of R18–2–101, R18–2–217, R18–2–218, R18–2–301, R18–2–401, and R18–2–701. Submitted on June 3, 1982.
7–1–1.1 (R9–3–101).	Policy and Legal Authority.	August 20, 1973	July 31, 1978, 43 FR 33245.	Submitted on August 20, 1973.

TABLE 2—EPA-APPROVED ARIZONA REGULATIONS—Continued

State citation	Title/subject	State effective date	EPA approval date	Additional explanation
7–1–1.3 (R9–3–103, excluding paragraph E).	Air Pollution Prohibited.	August 20, 1973	July 31, 1978, 43 FR 33245.	Submitted on August 20, 1973. EPA disapproved Paragraph E—see 40 CFR 52.133(b).
7–1–1.5 (R9–3–105).	Enforcement	August 20, 1973	July 31, 1978, 43 FR 33245.	Submitted on August 20, 1973.
Article 2				
R9–3–217, paragraph A.	Attainment Areas; Classification and Standards.	May 14, 1979	April 23, 1982, 47 FR 17483.	Submitted on January 4, 1979. Paragraph B was deleted at 80 FR 67319 (November 2, 2015).
Article 4				
7–1–4.5 (R9–3–405).	Sulfur Emissions: Other Industries.	August 20, 1973	July 31, 1978, 43 FR 33245.	Submitted on August 20, 1973.
R9–3–409	Agricultural Practices.	May 14, 1979	April 23, 1982, 47 FR 17483.	Submitted on January 4, 1979.
Article 5				
R9–3–505, paragraphs B to B.1, B.2, B.3 and B.4.	Standards of Performance for Existing Portland Cement Plants.	May 28, 1982	September 28, 1982, 47 FR 42572.	Submitted on June 3, 1982.
R9–3–505, paragraphs B.1.a and B.2.a.	Standards of Performance for Existing Portland Cement Plants.	July 25, 1979	April 23, 1982, 47 FR 17483.	Submitted on July 17, 1980.
R9–3–505, paragraphs A, B.1.b, B.2.b, and B.3 to D.	Standards of Performance for Existing Portland Cement Plants.	May 14, 1979	April 23, 1982, 47 FR 17483.	Submitted on January 4, 1979.
R9–3–508, paragraphs B to B.1, B.2, and B.5.	Standards of Performance for Existing Asphalt Concrete Plants.	May 28, 1982	September 28, 1982, 47 FR 42572.	Submitted on June 3, 1982.
R9–3–508, paragraphs B.1 to B.6.	Standards of Performance for Existing Asphalt Concrete Plants.	July 25, 1979	April 23, 1982, 47 FR 17483.	Submitted on April 1, 1980.
R9–3–508, paragraphs A and C.	Standards of Performance for Existing Asphalt Concrete Plants.	May 14, 1979	April 23, 1982, 47 FR 17483.	Submitted on January 4, 1979.
R9–3–516, paragraphs A to A.1 and A.2.	Standards of Performance for Existing Coal Preparation Plants.	May 28, 1982	September 28, 1982, 47 FR 42572.	Submitted on June 3, 1982.
R9–3–516, paragraphs A.1 to A.6.	Standards of Performance for Existing Coal Preparation Plants.	July 25, 1979	April 23, 1982, 47 FR 17483.	Submitted on April 1, 1980.

TABLE 2—EPA-APPROVED ARIZONA REGULATIONS—Continued

State citation	Title/subject	State effective date	EPA approval date	Additional explanation
R9–3–516, paragraph B.	Standards of Performance for Existing Coal Preparation Plants.	May 14, 1979	April 23, 1982, 47 FR 17483.	Submitted on January 4, 1979.
R9–3–521, paragraphs A to A.1 and A.2.	Standards of Performance for Existing Nonferrous Metals Industry Sources.	May 28, 1982	September 28, 1982, 47 FR 42572.	Submitted on June 3, 1982.
R9–3–521, paragraphs A.1 to A.5.	Standards of Performance for Existing Nonferrous Metals Industry Sources.	July 25, 1979	April 23, 1982, 47 FR 17483.	Submitted on April 1, 1980.
R9–3–521, paragraphs B to D.	Standards of Performance for Existing Nonferrous Metals Industry Sources.	May 14, 1979	April 23, 1982, 47 FR 17483.	Submitted on January 4, 1979.
R9–3–522, paragraphs A to A.1 and A.2.	Standards of Performance for Existing Gravel or Crushed Stone Processing Plants.	May 28, 1982	September 28, 1982, 47 FR 42572.	Submitted on June 3, 1982.
R9–3–522, paragraphs A.1 to A.5, B, and C.	Standards of Performance for Existing Gravel or Crushed Stone Processing Plants.	May 14, 1979	April 23, 1982, 47 FR 17483.	Submitted on January 4, 1979.
Title 18 (Environmental Quality) Chapter 2 (Department of Environmental Quality Air Pollution Control)				
Article 1 (General)				
R18–2–101 (except 20).	Definitions	March 21, 2017	83 FR 19631, May 4, 2018.	Submitted on April 28, 2017.
R18–2–102	Incorporated materials.	August 7, 2012	September 23, 2014, 79 FR 56655.	Submitted on October 29, 2012, and supplemented on September 6, 2013. AAC, title 18, chapter 2, supp. 12–2, June 30, 2012.
Article 2 (Ambient Air Quality Standards; Area Designations; Classifications)				
R18–2–201	Particulate Matter: PM_{10} and $PM_{2.5}$.	March 21, 2017	83 FR 19631, May 4, 2018.	Submitted on April 28, 2017.
R18–2–202	Sulfur Oxides (Sulfur Dioxide).	August 7, 2012	September 23, 2014, 79 FR 56655.	Submitted on October 29, 2012, and supplemented on September 6, 2013. AAC, title 18, chapter 2, supp. 12–2, June 30, 2012.
R18–2–203	Ozone	March 21, 2017	83 FR 19631, May 4, 2018.	Submitted on April 28, 2017.

TABLE 2—EPA-APPROVED ARIZONA REGULATIONS—Continued

State citation	Title/subject	State effective date	EPA approval date	Additional explanation
R18–2–204	Carbon monoxide	September 26, 1990.	September 23, 2014, 79 FR 56655.	Submitted on July 28, 2011, and supplemented on May 16, 2014. AAC, title 18, chapter 2, supp. 12–2, June 30, 2012.
R18–2–205	Nitrogen Oxides (Nitrogen Dioxide).	August 7, 2012	September 23, 2014, 79 FR 56655.	Submitted on October 29, 2012, and supplemented on September 6, 2013. AAC, title 18, chapter 2, supp. 12–2, June 30, 2012.
R18–2–206	Lead	August 7, 2012	September 23, 2014, 79 FR 56655.	Submitted on October 29, 2012, and supplemented on September 6, 2013. AAC, title 18, chapter 2, supp. 12–2, June 30, 2012.
R18–2–210	Attainment, Nonattainment, and Unclassifiable Area Designations.	July 2, 2015	May 1, 2017, 82 FR 20267.	Submitted on December 21, 2015.
R18–2–215	Ambient air quality monitoring methods and procedures.	September 26, 1990.	September 23, 2014, 79 FR 56655.	Submitted on October 29, 2012, and supplemented on September 6, 2013. AAC, title 18, chapter 2, supp. 12–2, June 30, 2012.
R18–2–216	Interpretation of Ambient Air Quality Standards and Evaluation of Air Quality Data.	March 7, 2009	September 23, 2014, 79 FR 56655.	Submitted on October 29, 2012, and supplemented on September 6, 2013. AAC, title 18, chapter 2, supp. 12–2, June 30, 2012.
R18–2–217	Designation and Classification of Attainment Areas.	March 21, 2017	83 FR 19631, May 4, 2018.	Submitted on April 28, 2017.
R18–2–218	Limitation of Pollutants in Classified Attainment Areas.	March 21, 2017	83 FR 19631, May 4, 2018.	Submitted on April 28, 2017.
R18–2–220	Air pollution emergency episodes, Department of Environmental Quality-Air Pollution Control.	September 26, 1990.	October 15, 2012, 77 FR 62452.	Submitted on August 15, 1994.

TABLE 2—EPA-APPROVED ARIZONA REGULATIONS—Continued

State citation	Title/subject	State effective date	EPA approval date	Additional explanation
Article 3 (Permits and Permit Revisions)				
R18–2–301	Definitions	August 7, 2012	November 2, 2015, 80 FR 67319.	Submitted on October 29, 2012, and supplemented on September 6, 2013 and July 2, 2014.
R18–2–302	Applicability; Registration; Classes of Permits.	August 7, 2012	November 2, 2015, 80 FR 67319.	Submitted on October 29, 2012, and supplemented on September 6, 2013 and July 2, 2014.
R18–2–302.01	Source Registration Requirements.	August 7, 2012	November 2, 2015, 80 FR 67319.	Submitted on October 29, 2012, and supplemented on September 6, 2013 and July 2, 2014.
R18–2–303	Transition from Installation and Operating Permit Program to Unitary Permit Program; Registration Transition; Minor NSR Transition.	August 7, 2012	November 2, 2015, 80 FR 67319.	Submitted on October 29, 2012, and supplemented on September 6, 2013 and July 2, 2014.
R18–2–304	Permit Application Processing Procedures.	August 7, 2012	November 2, 2015, 80 FR 67319.	Submitted on October 29, 2012, and supplemented on September 6, 2013 and July 2, 2014.
R18–2–306	Permit Contents	December 20, 1999	November 2, 2015, 80 FR 67319.	Submitted on October 29, 2012, and supplemented on September 6, 2013 and July 2, 2014.
R18–2–306.01	Permits Containing Voluntarily Accepted Emission Limitations and Standards.	January 1, 2007	November 2, 2015, 80 FR 67319.	Submitted on October 29, 2012, and supplemented on September 6, 2013 and July 2, 2014.
R18–2–306.02	Establishment of an Emissions Cap.	September 22, 1999.	November 2, 2015, 80 FR 67319.	Submitted on October 29, 2012, and supplemented on September 6, 2013 and July 2, 2014.
R18–2–310	Affirmative Defenses for Excess Emissions Due to Malfunctions, Startup, and Shutdown.	February 15, 2001	September 18, 2001, 66 FR 48087.	Submitted on March 26, 2001.

TABLE 2—EPA-APPROVED ARIZONA REGULATIONS—Continued

State citation	Title/subject	State effective date	EPA approval date	Additional explanation
R18–2–310.01	Reporting Requirements.	February 15, 2001	September 18, 2001, 66 FR 48087.	Submitted on March 26, 2001.
R18–2–311	Test Methods and Procedures.	November 15, 1993	November 2, 2015, 80 FR 67319.	Submitted on July 28, 2011.
R18–2–312	Performance Tests	November 15, 1993	November 2, 2015, 80 FR 67319.	Submitted on July 28, 2011.
R18–2–313	Existing Source Emission Monitoring.	February 15, 2001	November 5, 2012, 77 FR 66405.	Submitted on August 24, 2012.
R18–2–315	Posting of Permit	November 15, 1993	November 2, 2015, 80 FR 67319.	Submitted on October 29, 2012, and supplemented on September 6, 2013 and July 2, 2014.
R18–2–316	Notice by Building Permit Agencies.	May 14, 1979	November 2, 2015, 80 FR 67319.	Submitted on October 29, 2012, and supplemented on September 6, 2013 and July 2, 2014.
R18–2–319	Minor Permit Revisions.	August 7, 2012	November 2, 2015, 80 FR 67319.	Submitted on October 29, 2012, and supplemented on September 6, 2013 and July 2, 2014.
R18–2–320	Significant Permit Revisions.	August 7, 2012	November 2, 2015, 80 FR 67319.	Submitted on October 29, 2012, and supplemented on September 6, 2013 and July 2, 2014.
R18–2–321	Permit Reopenings; Revocation and Reissuance; Termination.	August 7, 2012	November 2, 2015, 80 FR 67319.	Submitted on October 29, 2012, and supplemented on September 6, 2013 and July 2, 2014.
R18–2–323	Permit Transfers	February 3, 2007	November 2, 2015, 80 FR 67319.	Submitted on October 29, 2012, and supplemented on September 6, 2013 and July 2, 2014.
R18–2–327	Annual Emissions inventory Questionnaire.	December 7, 1995	November 5, 2012, 77 FR 66405.	Submitted on August 24, 2012.
R18–2–330	Public Participation	March 21, 2017	83 FR 19631, May 4, 2018.	Submitted on April 28, 2017.
R18–2–332	Stack Height Limitation.	March 21, 2017	83 FR 19631, May 4, 2018.	Submitted on April 28, 2017.
R18–2–334	Minor New Source Review.	August 7, 2012	November 2, 2015, 80 FR 67319.	Submitted on October 29, 2012, and supplemented on September 6, 2013 and July 2, 2014.

TABLE 2—EPA-APPROVED ARIZONA REGULATIONS—Continued

State citation	Title/subject	State effective date	EPA approval date	Additional explanation
Article 4 (Permit Requirements for New Major Sources and Major Modifications to Existing Major Sources)				
R18–2–401	Definitions	March 21, 2017	83 FR 19631, May 4, 2018.	Submitted on April 28, 2017.
R18–2–402	General	March 21, 2017	83 FR 19631, May 4, 2018.	Submitted on April 28, 2017.
R18–2–403	Permits for Sources Located in Nonattainment Areas.	R18–2–403	83 FR 19631, May 4, 2018.	Submitted on April 28, 2017.
R18–2–404	Offset Standards	March 21, 2017	83 FR 19631, May 4, 2018.	Submitted on April 28, 2017.
R18–2–405	Special Rule for Major Sources of VOC or Nitrogen Oxides in Ozone Nonattainment Areas Classified as Serious or Severe.	March 21, 2017	83 FR 19631, May 4, 2018.	Submitted on April 28, 2017.
R18–2–406	Permit Requirements for Sources Located in Attainment and Unclassifiable Areas.	March 21, 2017	83 FR 19631, May 4, 2018.	Submitted on April 28, 2017.
R18–2–407	Air Quality Impact Analysis and Monitoring Requirements.	March 21, 2017	83 FR 19631, May 4, 2018.	Submitted on April 28, 2017.
R18–2–408	Innovative Control Technology.	March 21, 2017	83 FR 19631, May 4, 2018.	Submitted on April 28, 2017.
R18–2–409	Air Quality Models	November 15, 1993	November 2, 2015, 80 FR 67319.	Submitted on October 29, 2012, and supplemented on September 6, 2013 and July 2, 2014.
R18–2–410	Visibility and Air Quality Related Value Protection.	March 21, 2017	83 FR 19631, May 4, 2018.	Submitted on April 28, 2017.
R18–2–411	Permit Requirements for Sources that Locate in Attainment or Unclassifiable Areas and Cause or Contribute to a Violation of Any National Ambient Air Quality Standard.	March 21, 2017	83 FR 19631, May 4, 2018.	Submitted on April 28, 2017.
R18–2–412	PALs	March 21, 2017	83 FR 19631, May 4, 2018.	Submitted on April 28, 2017.

TABLE 2—EPA-APPROVED ARIZONA REGULATIONS—Continued

State citation	Title/subject	State effective date	EPA approval date	Additional explanation
Article 6 (Emissions from Existing and New Nonpoint Sources)				
R18–2–601	General	November 15, 1993	September 23, 2014, 79 FR 56655.	Submitted on July 15, 1998, and supplemented on May 16, 2014. AAC, title 18, chapter 2, supp. 12–2, June 30, 2012.
R18–2–602	Unlawful Open Burning.	March 16, 2004	May 16, 2006, 71 FR 28270.	Submitted on December 30, 2004.
R18–2–604	Open Areas, Dry Washes or Riverbeds.	November 15, 1993	September 23, 2014, 79 FR 56655.	Submitted on July 15, 1998, and supplemented on May 16, 2014. AAC, title 18, chapter 2, supp. 12–2, June 30, 2012.
R18–2–605	Roadways and Streets.	November 15, 1993	September 23, 2014, 79 FR 56655.	Submitted on July 15, 1998, and supplemented on May 16, 2014. AAC, title 18, chapter 2, supp. 12–2, June 30, 2012.
R18–2–606	Material Handling	November 15, 1993	September 23, 2014, 79 FR 56655.	Submitted on July 15, 1998, and supplemented on May 16, 2014. AAC, title 18, chapter 2, supp. 12–2, June 30, 2012.
R18–2–607	Storage Piles	November 15, 1993	September 23, 2014, 79 FR 56655.	Submitted on July 15, 1998, and supplemented on May 16, 2014. AAC, title 18, chapter 2, supp. 12–2, June 30, 2012.
R18–2–608	Mineral Tailings	March 7, 2009	September 23, 2014, 79 FR 56655.	Submitted on July 28, 2011, and supplemented on May 16, 2014. AAC, title 18, chapter 2, supp. 09–1, March 31, 2009.
R18–2–610	[Definitions for R18–2–611].	May 12, 2000	October 11, 2001, 66 FR 51869.	Submitted on July 11, 2000.
R18–2–610	Definitions for R18–2–610.01, R18–2–610.02, and R18–2–610.03.	July 2, 2015	May 1, 2017, 82 FR 20267.	Submitted on December 21, 2015.

TABLE 2—EPA-APPROVED ARIZONA REGULATIONS—Continued

State citation	Title/subject	State effective date	EPA approval date	Additional explanation
R18–2–610.03	Agricultural PM General Permit for Crop Operations; Pinal County PM Nonattainment Area.	July 2, 2015	May 1, 2017, 82 FR 20267.	Submitted on December 21, 2015.
R18–2–611	Agricultural PM_{10} General Permit; Maricopa PM_{10} Nonattainment Area.	May 12, 2000	October 11, 2001, 66 FR 51869.	Submitted on July 11, 2000.
R18–2–612	Definitions for R18–2–612.01.	July 2, 2015	May 1, 2017, 82 FR 20267.	Submitted on December 21, 2015.
R18–2–612.01	Agricultural PM General Permit for Irrigation Districts; PM Nonattainment Areas Designated After June 1, 2009.	July 2, 2015	May 1, 2017, 82 FR 20267.	Submitted on December 21, 2015.
R18–2–614	Evaluation of nonpoint source emissions.	August 7, 2012	September 23, 2014, 79 FR 56655.	Submitted on July 15, 1998, and supplemented on May 16, 2014. AAC, title 18, chapter 2, supp. 12–2, June 30, 2012.
Article 7 (Existing Stationary Source Performance Standards)				
R18–2–701	Definitions	August 7, 2012	September 23, 2014, 79 FR 56655.	Submitted on October 29, 2012, and supplemented on September 6, 2013. AAC, title 18, chapter 2, supp. 12–2, June 30, 2012.
R18–2–702	General Provisions	February 3, 2004	August 24, 2004, 69 FR 51952.	Establishes opacity standards. Submitted on January 16, 2004.
R18–2–703	Standards of Performance for Existing Fossil-Fuel Fired Steam Generators and General Fuel Burning Equipment.	March 7, 2009	September 23, 2014, 79 FR 56655.	Submitted on July 28, 2011, and supplemented on May 16, 2014. AAC, title 18, chapter 2, supp. 09–1, March 31, 2009.
R18–2–704	Standards of Performance for Incineration.	August 4, 2007	September 23, 2014, 79 FR 56655.	Submitted on July 28, 2011, and supplemented on May 16, 2014. AAC, title 18, chapter 2, supp. 09–1, March 31, 2009.

TABLE 2—EPA-APPROVED ARIZONA REGULATIONS—Continued

State citation	Title/subject	State effective date	EPA approval date	Additional explanation
R18–2–706	Standards of Performance for Existing Nitric Acid Plants.	November 15, 1993	September 23, 2014, 79 FR 56655.	Submitted on July 15, 1998, and supplemented on May 16, 2014. AAC, title 18, chapter 2, supp. 12–2, June 30, 2012.
R18–2–707	Standards of Performance for Existing Sulfuric Acid Plants.	November 15, 1993	September 23, 2014, 79 FR 56655.	Submitted on July 15, 1998, and supplemented on May 16, 2014. AAC, title 18, chapter 2, supp. 12–2, June 30, 2012.
R18–2–710	Standards of Performance for Existing Vessels for Petroleum Liquids.	November 15, 1993	March 24, 2003, 68 FR 14151.	Submitted on July 15, 1998.
R18–2–714	Standards of Performance for Existing Sewage Treatment Plants.	November 15, 1993	September 23, 2014, 79 FR 56655.	Submitted on July 15, 1998, and supplemented on May 16, 2014. AAC, title 18, chapter 2, supp. 12–2, June 30, 2012.
R18–2–715, sections F, G, and H.	Standards of Performance for Existing Primary Copper Smelters: Site-Specific Requirements.	March 7, 2009	September 23, 2014, 79 FR 56655.	Submitted on July 28, 2011, and supplemented on May 16, 2014. AAC, title 18, chapter 2, supp. 09–1, March 31, 2009.
R18–2–715.01	Standards of Performance for Existing Primary Copper Smelters, Compliance and Monitoring.	July 18, 2002	November 1, 2004, 69 FR 63321.	Submitted on September 12, 2003.
R18–2–715.02	Standards of Performance for Existing Primary Copper Smelters, Fugitive Emissions.	November 15, 1993	November 1, 2004, 69 FR 63321.	Submitted on July 15, 1998.
R18–2–719	Standards of Performance for Existing Stationary Rotating Machinery.	March 7, 2009	September 23, 2014, 79 FR 56655.	Submitted on July 28, 2011, and supplemented on May 16, 2014. AAC, title 18, chapter 2, supp. 12–2, June 30, 2012.

TABLE 2—EPA-APPROVED ARIZONA REGULATIONS—Continued

State citation	Title/subject	State effective date	EPA approval date	Additional explanation
R18–2–720	Standards of Performance for Existing Lime Manufacturing Plants.	March 7, 2009	September 23, 2014, 79 FR 56655.	Submitted on July 28, 2011, and supplemented on May 16, 2014. AAC, title 18, chapter 2, supp. 09–1, March 31, 2009.
R18–2–723	Standards of Performance for Existing Concrete Batch Plants.	November 15, 1993	September 23, 2014, 79 FR 56655.	Submitted on July 15, 1998, and supplemented on May 16, 2014. AAC, title 18, chapter 2, supp. 12–2, June 30, 2012.
R18–2–724	Standards of Performance for Existing Fossil-Fuel Fired Industrial and Commercial Equipment.	March 7, 2009	September 23, 2014, 79 FR 56655.	Submitted on July 28, 2011, and supplemented on May 16, 2014. AAC, title 18, chapter 2, supp. 09–1, March 31, 2009.
R18–2–725	Standards of Performance for Existing Dry Cleaning Plants.	November 15, 1993	March 24, 2003, 68 FR 14151.	Submitted on July 15, 1998.
R18–2–726	Sandblasting Operations.	November 15, 1993	September 23, 2014, 79 FR 56655.	Submitted on July 15, 1998, and supplemented on May 16, 2014. AAC, title 18, chapter 2, supp. 12–2, June 30, 2012.
R18–2–727	Standards of Performance for Spray Painting Operations.	November 15, 1993	March 24, 2003, 68 FR 14151.	Submitted on July 15, 1998.
R18–2–728	Standards of Performance for Existing Ammonium Sulfide Manufacturing Plants.	November 15, 1993	September 23, 2014, 79 FR 56655.	Submitted on July 15, 1998, and supplemented on May 16, 2014. AAC, title 18, chapter 2, supp. 12–2, June 30, 2012.
R18–2–729	Standards of Performance for Cotton Gins.	August 4, 2007	September 23, 2014, 79 FR 56655.	Submitted on July 28, 2011, and supplemented on May 16, 2014. AAC, title 18, chapter 2, supp. 09–1, March 31, 2009.

TABLE 2—EPA-APPROVED ARIZONA REGULATIONS—Continued

State citation	Title/subject	State effective date	EPA approval date	Additional explanation
R18–2–730	Standards of Performance for Unclassified Sources.	March 7, 2009	September 23, 2014, 79 FR 56655.	Submitted on July 28, 2011, and supplemented on May 16, 2014. AAC, title 18, chapter 2, supp. 09–1, March 31, 2009.
R18–2–732	Standards of Performance for Existing Hospital/Medical/Infectious Waste Incinerators.	August 4, 2007	September 23, 2014, 79 FR 56655.	Submitted on July 28, 2011, and supplemented on May 16, 2014. AAC, title 18, chapter 2, supp. 09–2, June 30, 2009.
Article 8 (Emissions from Mobile Sources (New and Existing))				
R18–2–801	Classification of Mobile Sources.	November 15, 1993	March 24, 2003, 68 FR 14151.	Submitted on July 15, 1998.
R18–2–802	Off-Road Machinery	November 15, 1993	March 24, 2003, 68 FR 14151.	Submitted on July 15, 1998.
R18–2–803	Heater-Planer Units	November 15, 1993	March 24, 2003, 68 FR 14151.	Submitted on July 15, 1998.
R18–2–804	Roadway and Site Cleaning Machinery.	November 15, 1993	March 24, 2003, 68 FR 14151.	Submitted on July 15, 1998.
R18–2–805	Asphalt and Tar Kettles.	November 15, 1993	March 24, 2003, 68 FR 14151.	Submitted on July 15, 1998.
Article 10 (Motor Vehicles; Inspections and Maintenance)				
R18–2–1001	Definitions	December 20, 1999	January 22, 2003, 68 FR 2912.	Submitted on July 6, 2001.
R18–2–1003	Vehicles to be Inspected by the Mandatory Vehicle Emissions Inspection Program.	June 28, 2000	January 22, 2003, 68 FR 2912.	Submitted on July 6, 2001.
R18–2–1005	Time of Inspection	December 20, 1999	January 22, 2003, 68 FR 2912.	Submitted on July 6, 2001.
R18–2–1006	Emissions Test Procedures.	January 1, 2002	January 22, 2003, 68 FR 2912.	Submitted on April 10, 2002.
R18–2–1007	Evidence of Meeting State Inspection Requirements.	December 20, 1999	January 22, 2003, 68 FR 2912.	Submitted on July 6, 2001.
R18–2–1008	Procedure for Issuing Certificates of Waiver.	December 20, 1999	January 22, 2003, 68 FR 2912.	Submitted on July 6, 2001.
R18–2–1009	Tampering Repair Requirements.	December 20, 1999	January 22, 2003, 68 FR 2912.	Submitted on July 6, 2001.
R18–2–1010	Low Emissions Tune-up, Emissions and Evaporative System Repair.	December 20, 1999	January 22, 2003, 68 FR 2912.	Submitted on July 6, 2001.
R18–2–1011	Vehicle Inspection Report.	December 20, 1999	January 22, 2003, 68 FR 2912.	Submitted on July 6, 2001.
R18–2–1012	Inspection Procedures and Fee.	December 20, 1999	January 22, 2003, 68 FR 2912.	Submitted on July 6, 2001.

TABLE 2—EPA-APPROVED ARIZONA REGULATIONS—Continued

State citation	Title/subject	State effective date	EPA approval date	Additional explanation
R18–2–1013	Reinspections	December 20, 1999	January 22, 2003, 68 FR 2912.	Submitted on July 6, 2001.
R18–2–1016	Licensing of Inspectors.	January 14, 2000	January 22, 2003, 68 FR 2912.	Submitted on July 6, 2001.
R18–2–1017	Inspection of Government Vehicles.	January 14, 2000	January 22, 2003, 68 FR 2912.	Submitted on July 6, 2001.
R18–2–1018	Certificate of Inspection.	January 14, 2000	January 22, 2003, 68 FR 2912.	Submitted on July 6, 2001.
R18–2–1019	Fleet Station Procedures and Permits.	January 1, 2002	January 22, 2003, 68 FR 2912.	Submitted on April 10, 2002.
R18–2–1022	Procedure for Waiving Inspections Due to Technical Difficulties.	January 14, 2000	January 22, 2003, 68 FR 2912.	Submitted on July 6, 2001.
R18–2–1023	Certificate of Exemption for Out-of-State Vehicles.	January 14, 2000	January 22, 2003, 68 FR 2912.	Submitted on July 6, 2001.
R18–2–1025	Inspection of Contractor's Equipment and Personnel.	January 14, 2000	January 22, 2003, 68 FR 2912.	Submitted on July 6, 2001.
R18–2–1026	Inspection of Fleet Stations.	January 14, 2000	January 22, 2003, 68 FR 2912.	Submitted on July 6, 2001.
R18–2–1027	Registration and Inspection of Emission Analyzers and Opacity Meters.	January 14, 2000	January 22, 2003, 68 FR 2912.	Submitted on July 6, 2001.
R18–2–1028	Certification of Users of Registered Analyzers and Analyzer Repair Persons.	January 14, 2000	January 22, 2003, 68 FR 2912.	Submitted on July 6, 2001.
R18–2–1029	Vehicle Emission Control Devices.	January 14, 2000	January 22, 2003, 68 FR 2912.	Submitted on July 6, 2001.
R18–2–1030	Visible Emissions; Mobile Sources.	January 14, 2000	January 22, 2003, 68 FR 2912.	Submitted on July 6, 2001.
R18–2–1031	Standards for Evaluating the Oxidation Efficiency of a Catalytic Converter.	December 20, 1999	January 22, 2003, 68 FR 2912.	Submitted on July 6, 2001.
Table 1	Dynamometer Loading Table—Annual Tests.	November 14, 1994	January 22, 2003, 68 FR 2912.	Table 1 is cited in R18–2–1006. Submitted on July 6, 2001.
Table 2	Emissions Standards—Annual Tests, Maximum Allowable.	June 21, 1995	January 22, 2003, 68 FR 2912.	Table 2 is cited in R18–2–1006 and R18–2–1019. Submitted on July 6, 2001.
Table 3	Emissions Standards—Biennial Tests.	December 20, 1999	January 22, 2003, 68 FR 2912.	Table 3 is cited in R18–2–1006. Submitted on July 6, 2001.

TABLE 2—EPA-APPROVED ARIZONA REGULATIONS—Continued

State citation	Title/subject	State effective date	EPA approval date	Additional explanation
Table 4	Transient Driving Cycle.	December 20, 1999	January 22, 2003, 68 FR 2912.	Table 4 is cited in R18–2–1006 and R18–2–1016. Submitted on July 6, 2001.
Table 5	Tolerances	November 14, 1994	January 22, 2003, 68 FR 2912.	Table 5 is cited in R18–2–1006. Submitted on July 6, 2001.
Table 6	Emissions Standards—Remote Sensing Identification.	December 20, 1999	January 22, 2003, 68 FR 2912.	Table 6 is cited in the VEI regulations. Submitted on July 6, 2001.
Article 13 (State Implementation Plan Rules For Specific Locations)				
R18–2–B1301.01	Limits on Lead-Bearing Fugitive Dust from the Hayden Smelter.	December 1, 2018	February 22, 2018, 83 FR 7614.	Submitted on April 6, 2017.
Appendix 15	Test Methods for Determining Opacity and Stabilization of Unpaved Roads.	May 7, 2017	February 22, 2018, 83 FR 7614.	Submitted on April 6, 2017.
Article 14 (Conformity Determinations)				
R18–2–1438	General Conformity for Federal Actions.	January 31, 1995	April 23, 1999, 64 FR 19916.	Submitted on March 3, 1995.
Article 15 (Forest and Range Management Burns)				
R18–2–1501	Definitions	March 16, 2004	May 16, 2006, 71 FR 28270.	Submitted on December 30, 2004.
R18–2–1502	Applicability	March 16, 2004	May 16, 2006, 71 FR 28270.	Submitted on December 30, 2004.
R18–2–1503	Annual Registration	March 16, 2004	May 16, 2006, 71 FR 28270.	Submitted on December 30, 2004.
R18–2–1504	Prescribed Burn Plan.	March 16, 2004	May 16, 2006, 71 FR 28270.	Submitted on December 30, 2004.
R18–2–1505	Prescribed Burn Requests and Authorization.	March 16, 2004	May 16, 2006, 71 FR 28270.	Submitted on December 30, 2004.
R18–2–1506	Smoke Dispersion and Evaluation.	March 16, 2004	May 16, 2006, 71 FR 28270.	Submitted on December 30, 2004.
R18–2–1507	Prescribed Burn Accomplishment; Wildlife Reporting.	March 16, 2004	May 16, 2006, 71 FR 28270.	Submitted on December 30, 2004.
R18–2–1508	Wildland Fire Use: Plan, Authorization, Monitoring; Inter-Agency Consultation; Status Reporting.	March 16, 2004	May 16, 2006, 71 FR 28270.	Submitted on December 30, 2004.
R18–2–1509	Emission Reduction Techniques.	March 16, 2004	May 16, 2006, 71 FR 28270.	Submitted on December 30, 2004.
R18–2–1510	Smoke Management Techniques.	March 16, 2004	May 16, 2006, 71 FR 28270.	Submitted on December 30, 2004.
R18–2–1511	Monitoring	March 16, 2004	May 16, 2006, 71 FR 28270.	Submitted on December 30, 2004.

TABLE 2—EPA-APPROVED ARIZONA REGULATIONS—Continued

State citation	Title/subject	State effective date	EPA approval date	Additional explanation
R18–2–1512	Burner Qualifications.	March 16, 2004	May 16, 2006, 71 FR 28270.	Submitted on December 30, 2004.
R18–2–1513	Public Notification Program; Regional Coordination.	March 16, 2004	May 16, 2006, 71 FR 28270.	Submitted on December 30, 2004.
Appendices to Title 18 (Environmental Quality), Chapter 2 (Department of Environmental Quality Air Pollution Control)				
Appendix 1	Filing Instructions for Installation Permit Application.	July 25, 1979	April 23, 1982, 47 FR 17483.	Submitted on April 1, 1980. Appendix 1 in its entirety was approved at 47 FR 17483 (April 23, 1982). Certain subsections of appendix 1 were superseded by approval of revisions at 48 FR 19878 (May 3, 1983) and at 49 FR 41026 (October 19, 1984. The latter rule was corrected 69 FR 2509 (January 16, 2004).
Appendix 1, subsections A1.4, A1.4.1, A1.4.3 (added), A1.4.3 (renumbered only), A1.5, A1.6.1 (deleted), A1.6.2 and A1.6.3 (renumbered only), A1.6.4 and A1.6.5 (deleted), A1.6.6 (renumbered only), A1.6.6.1, A1.6.6.2 and A1.6.6.3 (renumbered only), A1.6.6.4 (deleted), A1.6.6.5 (renumbered only) A1.6.6.6, A1.6.6.7 (Renumbered), A1.6.7.1, A1.6.7.2, A1.6.7.3 and Form ADHS/EHS Air Quality 100A (rev 12–80).	Filing Instructions for Installation Permit Application.	May 28, 1982	May 3, 1983, 48 FR 19878.	Relates to State PSD regulations. Submitted on June 3, 1982.
Appendix 1, subsections A1.5.6, and A1.9 (added).	Filing Instructions for Installation Permit Application.	September 22, 1983.	October 19, 1984, 49 FR 41026; corrected on January 16, 2004, 69 FR 2509.	Submitted on February 3, 1984.

TABLE 2—EPA-APPROVED ARIZONA REGULATIONS—Continued

State citation	Title/subject	State effective date	EPA approval date	Additional explanation
Appendix 2	Test Methods and Protocols.	July 2, 2015	May 1, 2017, 82 FR 20267.	Submitted on December 21, 2015.
Appendix 2	Filing Instructions for Operating Permit Application.	July 25, 1979	April 23, 1982, 47 FR 17483.	Submitted on April 1, 1980. Appendix 2 in its entirety was approved at 47 FR 17483 (April 23, 1982). Certain subsections of appendix 2 were superseded by approval of revisions at 48 FR 19878 (May 3, 1983).
Appendix 2, subsections A2.2.5, A2.3, A2.3.8.	Filing Instructions for Operating Permit Application.	May 28, 1982	May 3, 1983, 48 FR 19878.	Relates to State PSD regulations. Submitted on June 3, 1982.
Appendix 8	Procedures for Utilizing the Sulfur Balance Method for Determining Sulfur Emissions.	July 18, 2005	April 12, 2006, 71 FR 18624.	Cited in Arizona Administrative Code rule R18–2–715.01. Submitted on March 1, 2006.
Materials Incorporated By Reference in Title 18 (Environmental Quality) Chapter 2 (Department of Environmental Quality Air Pollution Control)				
[Incorporated by reference through R18–2–102].	Arizona Testing Manual for Air Pollutant Emissions, Revision F, excluding sections 2 through 7.	March 1992	September 23, 2014, 79 FR 56655.	Approval includes section 1 only. Submitted on July 28, 2011, and supplemented on May 16, 2014. Relates to various provisions in Arizona Administrative Code, title 18, chapter 2, articles 4, 6, and 7.
[Incorporated by reference through R18–2–220].	Procedures for Prevention of Emergency Episodes.	1988 Edition	October 15, 2012, 77 FR 62452.	Submitted on August 15, 1994.
Title 20 (Commerce, Financial Institutions, and Insurance) Chapter 2 (Department of Weights and Measures)				
Article 1 (Administration and Procedures)				
R20–2–101	Definitions	June 5, 2004	June 13, 2012, 77 FR 35279.	Submitted on September 21, 2009.
Article 7 (Motor Fuels and Petroleum Products)				
R20–2–701	Definitions	February 9, 2001	March 4, 2004, 69 FR 10161.	Submitted on August 15, 2001. Relates to the Arizona Cleaner Burning Gasoline (CBG) program.

TABLE 2—EPA-APPROVED ARIZONA REGULATIONS—Continued

State citation	Title/subject	State effective date	EPA approval date	Additional explanation
R20–2–716	Sampling and Access to Records.	October 18, 1999	March 4, 2004, 69 FR 10161.	Submitted on August 15, 2001. Relates to the Arizona Cleaner Burning Gasoline (CBG) program.
R20–2–750	Registration Relating to Arizona CBG or AZR–BOB.	September 22, 1999.	March 4, 2004, 69 FR 10161.	Submitted on August 15, 2001. Relates to the Arizona Cleaner Burning Gasoline (CBG) program.
R20–2–751	Arizona CBG Requirements.	February 9, 2001	March 4, 2004, 69 FR 10161.	Submitted on August 15, 2001. Relates to the Arizona Cleaner Burning Gasoline (CBG) program.
R20–2–752	General Requirements for Registered Suppliers.	September 22, 1999.	March 4, 2004, 69 FR 10161.	Submitted on August 15, 2001. Relates to the Arizona Cleaner Burning Gasoline (CBG) program.
R20–2–753	General Requirements for Pipelines and 3rd-party Terminals.	September 22, 1999.	March 4, 2004, 69 FR 10161.	Submitted on August 15, 2001. Relates to the Arizona Cleaner Burning Gasoline (CBG) program.
R20–2–754	Downstream Blending Exceptions for Transmix.	September 22, 1999.	March 4, 2004, 69 FR 10161.	Submitted on August 15, 2001. Relates to the Arizona Cleaner Burning Gasoline (CBG) program.
R20–2–755	Additional Requirements for AZRBOB and Downstream Oxygenate Blending.	September 22, 1999.	March 4, 2004, 69 FR 10161.	Submitted on August 15, 2001. Relates to the Arizona Cleaner Burning Gasoline (CBG) program.
R20–2–756	Downstream Blending of Arizona CBG with Non-oxygenate Blendstocks.	September 22, 1999.	March 4, 2004, 69 FR 10161.	Submitted on August 15, 2001. Relates to the Arizona Cleaner Burning Gasoline (CBG) program.
R20–2–757	Product Transfer Documentation; Records; Retention.	September 22, 1999.	March 4, 2004, 69 FR 10161.	Submitted on August 15, 2001. Relates to the Arizona Cleaner Burning Gasoline (CBG) program.
R20–2–758	Adoption of Fuel Certification Models.	September 22, 1999.	March 4, 2004, 69 FR 10161.	Submitted on August 15, 2001. Relates to the Arizona Cleaner Burning Gasoline (CBG) program.

TABLE 2—EPA-APPROVED ARIZONA REGULATIONS—Continued

State citation	Title/subject	State effective date	EPA approval date	Additional explanation
R20–2–759	Testing Methodologies.	February 9, 2001	March 4, 2004, 69 FR 10161.	Submitted on August 15, 2001. Relates to the Arizona Cleaner Burning Gasoline (CBG) program.
R20–2–760	Compliance Surveys.	February 9, 2001	March 4, 2004, 69 FR 10161..	Submitted on August 15, 2001. Relates to the Arizona Cleaner Burning Gasoline (CBG) program.
R20–2–761	Liability for Noncompliant Arizona CBG or AZRBOB.	September 22, 1999.	March 4, 2004, 69 FR 10161.	Submitted on August 15, 2001. Relates to the Arizona Cleaner Burning Gasoline (CBG) program.
R20–2–762	Penalties	September 22, 1999.	March 4, 2004, 69 FR 10161.	Submitted on August 15, 2001. Relates to the Arizona Cleaner Burning Gasoline (CBG) program.
Table 1	Type 1 Gasoline Standards.	February 9, 2001	March 4, 2004, 69 FR 10161.	Table 1 is cited in R20–2–751 (''Arizona CBG Requirements''). Submitted on August 15, 2001. Relates to the Arizona Cleaner Burning Gasoline (CBG) program.
Table 2	Type 2 Gasoline Standards.	February 9, 2001	March 4, 2004, 69 FR 10161.	Table 2 is cited in R20–2–751 (''Arizona CBG Requirements''). Submitted on August 15, 2001. Relates to the Arizona Cleaner Burning Gasoline (CBG) program.
Article 9 (Gasoline Vapor Control)				
R20–2–901	Material Incorporated by Reference.	June 5, 2004	June 13, 2012, 77 FR 35279.	Submitted on September 21, 2009.
R20–2–902	Exemptions	June 5, 2004	June 13, 2012, 77 FR 35279.	Submitted on September 21, 2009.
R20–2–903	Equipment and Installation.	June 5, 2004	June 13, 2012, 77 FR 35279.	Submitted on September 21, 2009.
R20–2–904	Application Requirements and Process for Authority to Construct Plan Approval.	June 5, 2004	June 13, 2012, 77 FR 35279.	Submitted on September 21, 2009.
R20–2–905	Initial Inspection and Testing.	June 5, 2004	June 13, 2012, 77 FR 35279.	Submitted on September 21, 2009.

TABLE 2—EPA-APPROVED ARIZONA REGULATIONS—Continued

State citation	Title/subject	State effective date	EPA approval date	Additional explanation
R20–2–907	Operation	October 8, 1998	June 13, 2012, 77 FR 35279.	Submitted on September 21, 2009.
R20–2–908	Training and Public Education.	October 8, 1998	June 13, 2012, 77 FR 35279.	Submitted on September 21, 2009.
R20–2–909	Recordkeeping and Reporting.	October 8, 1998	June 13, 2012, 77 FR 35279.	Submitted on September 21, 2009.
R20–2–910	Annual Inspection and Testing.	June 5, 2004	June 13, 2012, 77 FR 35279.	Submitted on September 21, 2009.
R20–2–911	Compliance Inspections.	June 5, 2004	June 13, 2012, 77 FR 35279.	Submitted on September 21, 2009.
R20–2–912	Enforcement	June 5, 2004	June 13, 2012, 77 FR 35279.	Submitted on September 21, 2009.

TABLE 3—EPA-APPROVED ARIZONA GENERAL PERMITS

Title	State effective date	EPA approval date	Additional explanation
Dust Action General Permit, including the general permit itself, and attachments A, B, and C.	December 30, 2011	March 31, 2014, 79 FR 17881	Issued by Arizona Department of Environmental Quality pursuant to ARS 49–457.05. Applies to certain types of dust sources in a county with a population of two million or more persons or any portion of a county within an area designated by EPA as a serious PM–10 nonattainment area or a maintenance area that was designated as a serious PM–10 nonattainment area. Submitted on May 25, 2012.

TABLE 4—EPA-APPROVED MARICOPA COUNTY AIR POLLUTION CONTROL REGULATIONS

County citation	Title/subject	State effective date	EPA approval date	Additional explanation
Pre-July 1988 Rule Codification				
Regulation I—General Provisions				
Rule 1	Emissions Regulated; Policy; Legal Authority.	August 12, 1971	July 27, 1972, 37 FR 15080.	Submitted on May 26, 1972.
Rule 2, No. 11 "Alteration or Modification" and No. 33 "Existing Source".	Definitions	June 23, 1980	June 18, 1982, 47 FR 26382.	Submitted on March 8, 1982.
Rule 2, except Nos. 18, 49, 50, 52, 54 and 57.	Definitions	June 23, 1980	April 12, 1982, 47 FR 15579.	Submitted on June 23, 1980.
Rule 3	Air pollution prohibited	June 23, 1980	April 12, 1982, 47 FR 15579.	Submitted on June 23, 1980.
Regulation II—Permits				
Rule 21.0 (paragraphs A–C; subparagraphs D.l.a–d; and paragraph E only).	Procedures for obtaining an installation permit.	October 25, 1982	August 10, 1988, 53 FR 30224; vacated; restored on January 29, 1991, 56 FR 3219.	Submitted on March 4, 1983.†
Rule 21.0 (subparagraph D.1, and subparagraphs D.1.e, f, and g only).	Procedures for obtaining an installation permit.	July 9, 1984	August 10, 1988, 53 FR 30224; vacated; restored on January 29, 1991, 56 FR 3219.	Submitted on March 4, 1983. Submitted on April 17, 1985.†

TABLE 4—EPA-APPROVED MARICOPA COUNTY AIR POLLUTION CONTROL REGULATIONS—Continued

County citation	Title/subject	State effective date	EPA approval date	Additional explanation
Rule 21 (paragraph G)	Permit Conditions	October 2, 1978	April 12, 1982, 47 FR 15579.	Relates to public comment period.
Rule 22 (paragraphs A, C, D, F, G, and H).	Permit Denial-Action-Transfer-Expiration-Posting-Revocation-Compliance.	August 12, 1971	July 27, 1972, 37 FR 15080.	Paragraphs B and E have been superseded.
Rule 23	Permit Classes	August 12, 1971	July 27, 1972, 37 FR 15080.	Submitted on May 26, 1972.
Rule 25	Emissions test methods and procedures.	June 23, 1980	April 12, 1982, 47 FR 15579.	Submitted on June 23, 1980.
Rule 26	Portable Equipment	August 12, 1971	July 27, 1972, 37 FR 15080.	Submitted on May 26, 1972.
Rule 26	Air quality models	June 23, 1980	April 12, 1982, 47 FR 15579.	Submitted on June 23, 1980.
Rule 27	Performance tests	June 23, 1980	April 12, 1982, 47 FR 15579.	Submitted on June 23, 1980.
Rule 28	Permit Fees	March 8, 1982	June 18, 1982, 47 FR 26382.	Submitted on March 8, 1982.
Regulation III—Control of Air Contaminants				
Rule 32, Paragraph G	Other Industries	October 1, 1975	April 12, 1982, 47 FR 15579.	Paragraph G of Rule 32 (''Odors and Gaseous Emissions'') is titled ''Other Industries.'' Submitted on June 23, 1980.
Rule 32, Paragraph H	Fuel Burning Equipment for Producing Electric Power (Sulfur Dioxide).	October 1, 1975	April 12, 1982, 47 FR 15579.	Paragraph H of Rule 32 (''Odors and Gaseous Emissions'') is titled ''Fuel Burning Equipment for Producing Electric Power (Sulfur Dioxide).'' Submitted on June 23, 1980.
Rule 32, Paragraph J	Operating Requirements for an Asphalt Kettle.	June 23, 1980	April 12, 1982, 47 FR 15579.	Paragraph J of Rule 32 (''Odors and Gaseous Emissions'') is titled ''Operating Requirements for an Asphalt Kettle.'' Submitted on June 23, 1980.
Rule 32, Paragraph K	Emissions of Carbon Monoxide.	June 23, 1980	April 12, 1982, 47 FR 15579.	Paragraph K of Rule 32 (''Odors and Gaseous Emissions'') is titled ''Emissions of Carbon Monoxide.'' Submitted on June 23, 1980.
Rule 32 (Paragraphs A through F only).	Odors and Gaseous Emissions.	August 12, 1971	July 27, 1972, 37 FR 15080.	Paragraph G was superseded by approval of paragraph J of amended Rule 32. Submitted on May 26, 1972.
Rule 35	Incinerators	August 12, 1971	July 27, 1972, 37 FR 15080.	Superseded by approval of Maricopa Rule 313 at 79 FR 57445 (September 25, 2014) except for Hospital/Medical/Infectious Waste Incinerators. Submitted on May 26, 1972.
Regulation IV—Production of Records; Monitoring; Testing and Sampling Facilities				
Rule 40	Recordkeeping and Reporting.	June 23, 1980	April 12, 1982, 47 FR 15579.	Submitted on June 23, 1980.

TABLE 4—EPA-APPROVED MARICOPA COUNTY AIR POLLUTION CONTROL REGULATIONS—Continued

County citation	Title/subject	State effective date	EPA approval date	Additional explanation
Rule 41, paragraph A	Monitoring	August 12, 1971	July 27, 1972, 37 FR 15080.	Submitted on May 26, 1972.
Rule 41, paragraph B	Monitoring	October 2, 1978	April 12, 1982, 47 FR 15579.	Submitted on January 18, 1979.
Rule 42	Testing and Sampling	August 12, 1971	July 27, 1972, 37 FR 15080.	Submitted on May 26, 1972.
Rule 43	Right of inspection	August 12, 1971	July 27, 1972, 37 FR 15080.	Submitted on May 26, 1972.
Regulation VII—Emergency Procedures				
Rule 71	Anti-degradation	October 1, 1975	April 12, 1982, 47 FR 15579.	Submitted on June 23, 1980.
Rule 74, paragraph C	Public Notification	June 23, 1980	April 12, 1982, 47 FR 15579.	Submitted on June 23, 1980. Paragraphs A, B, and D superseded by approval of Rule 510 at 74 FR 57612 (November 9, 2009).
Regulation VIII—Validity and Operation				
Rule 80	Validity	August 12, 1971	July 27, 1972, 37 FR 15080.	Submitted on May 26, 1972.
Rule 81	Operation	August 12, 1971	July 27, 1972, 37 FR 15080.	Submitted on May 26, 1972.
Post-July 1988 Rule Codification				
Regulation I—General Provisions				
Rule 100, Section 100, Subsection 108.	Hearing Board	September 25, 2013	August 10, 2015, 80 FR 47859.	Subsection 108 is a subsection within section 100 (''General'') of Rule 100 (''General Provisions and Definitions''). Submitted on December 6, 2013.
Rule 100, Section 500	Monitoring and Records	March 15, 2006	November 5, 2012, 77 FR 66405.	Section 500 is a section within Rule 100 (''General Provisions and Definitions''). Includes subsections 501 (Reporting requirements), 502 (Data reporting), 503 (Emissions statements required as stated in the Act), 504 (Retention of records); and 505 (Annual emissions inventory report). Submitted on August 24, 2012.
Rule 140	Excess Emissions	Revised September 5, 2001.	August 27, 2002, 67 FR 54957.	Submitted on February 22, 2002.
Regulation II—Permits and Fees				
Rule 220	Permits to Operate	July 13, 1988	January 6, 1992, 57 FR 354.	Submitted on January 4, 1990.
Rule 242	Emissions Offsets Generated by the Voluntary Paving of Unpaved Roads.	June 20, 2007	August 6, 2007, 72 FR 43538.	Submitted on July 5, 2007.
Regulation III—Control of Air Contaminants				
Rule 300	Visible Emissions	March 12, 2008	July 28, 2010, 75 FR 44141.	Submitted on July 10, 2008.

TABLE 4—EPA-APPROVED MARICOPA COUNTY AIR POLLUTION CONTROL REGULATIONS—Continued

County citation	Title/subject	State effective date	EPA approval date	Additional explanation
Rule 310	Fugitive Dust From Dust-Generating Operations.	January 27, 2010	December 15, 2010, 75 FR 78167.	Submitted on April 12, 2010. Cites appendices C and F, which are listed separately in this table.
Rule 310.01	Fugitive Dust From Non-Traditional Sources of Fugitive Dust.	January 27, 2010	December 15, 2010, 75 FR 78167.	Submitted on April 12, 2010. Cites appendix C, which is listed separately in this table.
Rule 311	Particulate matter from process industries.	August 2, 1993	April 10, 1995, 60 FR 18010. Vacated by *Ober* decision. Restored August 4, 1997, 62 FR 41856.	Submitted on March 3, 1994.
Rule 312	Abrasive Blasting	July 13, 1988	January 4, 2001, 66 FR 730.	Submitted on January 4, 1990.
Rule 313	Incinerators, Burn-Off Ovens and Crematories.	May 9, 2012	September 25, 2014, 79 FR 57445.	Submitted on August 27, 2012.
Rule 314	Open Outdoor Fires and Indoor Fireplaces at Commercial and Institutional Establishments.	March 12, 2008	November 9, 2009, 74 FR 57612.	Submitted on July 10, 2008.
Rule 316	Nonmetallic Mineral Processing.	March 12, 2008	November 13, 2009, 74 FR 58553.	Submitted on July 10, 2008.
Rule 318	Approval of Residential Woodburning Devices.	April 21, 1999	November 8, 1999, 64 FR 60678.	Submitted on August 4, 1999.
Rule 322	Power Plant Operations	October 17, 2007	October 14, 2009, 74 FR 52693.	Submitted on January 9, 2008.
Rule 323	Fuel Burning Equipment from Industrial/Commercial/Institutional (ICI) Sources.	October 17, 2007	October 14, 2009, 74 FR 52693.	Submitted on January 9, 2008.
Rule 324	Stationary Internal Combustion (IC) Engines.	October 17, 2007	October 14, 2009, 74 FR 52693.	Submitted on January 9, 2008.
Rule 325	Brick and Structural Clay Products (BSCP) Manufacturing.	August 10, 2005	August 21, 2007, 72 FR 46564.	Element of the Revised PM–10 State Implementation Plan for the Salt River Area, September 2005. Submitted on October 7, 2005.
Rule 331	Solvent Cleaning	April 21, 2004	December 21, 2004, 69 FR 76417.	Submitted on July 28, 2004.
Rule 333	Petroleum Solvent Dry Cleaning.	June 19, 1996	February 9, 1998, 63 FR 6489.	Submitted on February 26, 1997.
Rule 334	Rubber Sports Ball Manufacturing.	June 19, 1996	February 9, 1998, 63 FR 6489.	Submitted on February 26, 1997.
Rule 335	Architectural Coatings	July 13, 1988	January 6, 1992, 57 FR 354.	Submitted on January 4, 1990.
Rule 336	Surface Coating Operations.	April 7, 1999	September 20, 1999, 64 FR 50759.	Submitted on August 4, 1999.
Rule 337	Graphic Arts	November 20, 1996	February 9, 1998, 63 FR 6489.	Submitted on March 4, 1997.
Rule 338	Semiconductor Manufacturing.	June 19, 1996	February 9, 1998, 63 FR 6489.	Submitted on February 26, 1997.
Rule 339	Vegetable Oil Extract Processes.	November 16, 1992	February 9, 1998, 63 FR 6489.	Submitted on February 4, 1993.
Rule 340	Cutback and Emulsified Asphalt.	September 21, 1992	February 1, 1996, 61 FR 3578.	Submitted on November 13, 1992.
Rule 341	Metal Casting	August 5, 1994	February 12, 1996, 61 FR 5287.	Submitted on August 16, 1994.
Rule 342	Coating Wood Furniture and Fixtures.	November 20, 1996	February 9, 1998, 63 FR 6489.	Submitted on March 4, 1997.
Rule 343	Commercial Bread Bakeries.	February 15, 1995	March 17, 1997, 62 FR 12544.	Submitted on August 31, 1995.
Rule 344	Automobile Windshield Washer Fluid.	April 7, 1999	November 30, 2001, 66 FR 59699.	Submitted on August 4, 1999.

TABLE 4—EPA-APPROVED MARICOPA COUNTY AIR POLLUTION CONTROL REGULATIONS—Continued

County citation	Title/subject	State effective date	EPA approval date	Additional explanation
Rule 346	Coating Wood Millwork	November 20, 1996	February 9, 1998, 63 FR 6489.	Submitted on March 4, 1997.
Rule 347	Ferrous Sand Casting	March 4, 1998	June 12, 2000, 65 FR 36788.	Submitted on August 4, 1999.
Rule 348	Aerospace Manufacturing and Rework Operations.	April 7, 1999	September 20, 1999, 64 FR 50759.	Submitted on August 4, 1999.
Rule 349	Pharmaceutical, Cosmetic, and Vitamin Manufacturing Operations.	April 7, 1999	June 8, 2001, 66 FR 30815.	Submitted on August 4, 1999.
Rule 350	Storage of Organic Liquids at Bulk Plants and Terminals.	April 6, 1992	September 5, 1995, 60 FR 46024.	Submitted on June 29, 1992.
Rule 351	Loading of Organic Liquids.	February 15, 1995	February 9, 1998, 63 FR 6489.	Submitted on August 31, 1995.
Rule 352	Gasoline Delivery Vessels.	November 16, 1992	September 5, 1995, 60 FR 46024.	Submitted on February 4, 1993.
Rule 353	Transfer of Gasoline into Stationary Dispensing Tanks.	April 6, 1992	February 1, 1996, 61 FR 3578.	Submitted on June 29, 1992.
Rule 358	Polystyrene Foam Operations.	April 20, 2005	May 26, 2005, 70 FR 30370.	Submitted on April 25, 2005.
Regulation V—Air Quality Standards and Area Classification				
Rule 510, excluding Appendix G to the Maricopa County Air Pollution Control Regulations.	Air Quality Standards	November 1, 2006	November 9, 2009, 74 FR 57612.	Submitted on June 7, 2007.
Regulation VI—Emergency Episodes				
Rule 600	Emergency Episodes	July 13, 1988	March 18, 1999, 64 FR 13351.	Submitted on January 4, 1990.
Appendices to Maricopa County Air Pollution Control Rules and Regulations				
Appendix C	Fugitive Dust Test Methods.	March 26, 2008	December 15, 2010, 75 FR 78167.	Cited in Rules 310 and 310.01. Submitted on July 10, 2008.
Appendix F	Soil Designations	April 7, 2004	August 21, 2007, 72 FR 46564.	Cited in Rule 310. Submitted on October 7, 2005.

† Vacated by the U.S. Court of Appeals for the Ninth Circuit in *Delaney* v. *EPA,* 898 F.2d 687 (9th Cir. 1990). Restored on January 29, 1991, 56 FR 3219.

TABLE 5—EPA-APPROVED MARICOPA COUNTY DOCUMENTS RELATED TO APPLICATIONS FOR DUST CONTROL PERMITS

Title	State effective date	EPA approval date	Additional explanation
Application for Dust Control Permit.	June 22, 2005	August 21, 2007, 72 FR 46564.	Relates to Rule 310 (''Fugitive Dust from Dust-Generating Operations''). Element of the Revised PM–10 State Implementation Plan for the Salt River Area, Additional Materials, September 2005. Submitted on November 29, 2005.

TABLE 5—EPA-APPROVED MARICOPA COUNTY DOCUMENTS RELATED TO APPLICATIONS FOR DUST CONTROL PERMITS—Continued

Title	State effective date	EPA approval date	Additional explanation
Guidance for Application for Dust Control Permit.	June 22, 2005	August 21, 2007, 72 FR 46564.	Relates to Rule 310 (''Fugitive Dust from Dust-Generating Operations''). Element of the Revised PM–10 State Implementation Plan for the Salt River Area, Additional Materials, September 2005. Submitted on November 29, 2005.

TABLE 6—EPA-APPROVED ORDINANCES ADOPTED BY MARICOPA COUNTY AND OTHER LOCAL JURISDICTIONS WITHIN MARICOPA COUNTY

County citation	Title/subject	State effective date	EPA approval date	Additional explanation
Maricopa County Ordinance P–26.	Residential Woodburning Restriction Ordinance.	March 26, 2008	November 9, 2009, 74 FR 57612.	Submitted on July 10, 2008.
Maricopa County, Ordinance P–7.	Trip Reduction Ordinance.	Adopted May 26, 1994	May 4, 1998, 63 FR 24434.	Submitted on August 31, 1995.
Town of Carefree Ordinance No. 98–14.	An Ordinance of the Town of Carefree, Maricopa County, Arizona, Adding Section 10–4 to the Town Code Relating to Clean-Burning Fireplaces, Providing Penalties for Violations (3 pages).	Adopted September 1, 1998.	July 25, 2002, 67 FR 48718.	Submitted on February 16, 2000.
Town of Gilbert Ordinance 1066.	An Ordinance of the Common Council of the Town of Gilbert, Arizona Amending the Code of Gilbert by Amending Chapter 30 *Environment,* by adding New Article II *Fireplace Restrictions* Prescribing Standards for Fireplaces, Woodstoves, and Other Solid-Fuel Burning Devices in New Construction; Providing for an Effective Date of January 1, 1999; Providing for Repeal of Conflicting Ordinances; Providing for Severability (3 pages).	January 1, 1999	July 25, 2002, 67 FR 48718.	Adopted by the Town of Gilbert on November 25, 1997. Submitted on February 16, 2000.
City of Mesa Ordinance No. 3434.	An Ordinance of the City Council of the City of Mesa, Maricopa County, Arizona, Relating to Fireplace Restrictions Amending Title 4, Chapter 1, Section 2 Establishing a Delayed Effective Date; and Providing Penalties for Violations (3 pages).	December 31, 1998	July 25, 2002, 67 FR 48718.	Adopted by the City of Mesa on February 2, 1998. Submitted on February 16, 2000.

TABLE 6—EPA-APPROVED ORDINANCES ADOPTED BY MARICOPA COUNTY AND OTHER LOCAL JURISDICTIONS WITHIN MARICOPA COUNTY—Continued

County citation	Title/subject	State effective date	EPA approval date	Additional explanation
Town of Paradise Valley Ordinance Number 454.	An Ordinance of the Town of Paradise Valley, Arizona, Relating to Grading and Dust Control, Amending Article 5–13 of the Town Code and Sections 5–13–1 Through 5–13–5, Providing Penalties for Violations and Severability (5 pages).	January 22, 1998	July 25, 2002, 67 FR 48718.	Adopted by the Town of Paradise Valley on January 22, 1998. Submitted on February 16, 2000. [Incorporation Note: There is an error in the ordinance's title, ordinance amended only sections 5–13–1 to 5–13–4; see section 1 of the ordinance.]
Town of Paradise Valley Ordinance Number 450.	An Ordinance of the Town of Paradise Valley, Arizona, Adding Section 5–1–7 to the Town Code Relating to Clean-Burning Fireplaces, Providing Penalties for Violations (3 pages).	December 18, 1997	July 25, 2002, 67 FR 48718.	Adopted by the Town of Paradise Valley on December 18, 1997. Submitted on February 16, 2000.
City of Phoenix Ordinance No. G4062.	An Ordinance Amending the Phoenix City Code By Adding A New Chapter 40 ''Environmental Protections,'' By Regulating Fireplaces, Wood Stoves and Other Solid-Fuel Burning Devices and Providing that the Provisions of this Ordinance Shall Take Effect on December 31, 1998 (5 pages).	December 31, 1998	July 25, 2002, 67 FR 48718.	Adopted by the City of Phoenix on December 10, 1997. Submitted on February 16, 2000.
City of Phoenix Ordinance No. G4037.	An Ordinance Amending Chapter 39, Article 2, Section 39–7 of the Phoenix City Code by Adding Subsection G Relating to Dust Free Parking Areas; and Amending Chapter 36, Article XI, Division I, Section 36–145 of the Phoenix City Code Relating to Parking on Non-Dust Free Lots (5 pages).	Adopted July 2, 1997 ...	July 25, 2002, 67 FR 48718.	Adopted by the City of Phoenix on July 2, 1997. Submitted on February 16, 2000.
City of Tolleson Ordinance No. 376, N.S..	An Ordinance of the City of Tolleson, Maricopa County, Arizona, Amending Chapter 7 of the Tolleson City Code by Adding a New Section 7–9, Prohibiting the Installation or Construction of a Fireplace or Wood Stove Unless It Meets the Standards Set Forth Herein (including Exhibit A, 4 pages).	Adopted December 8, 1998.	July 25, 2002, 67 FR 48718.	Adopted by the City of Tolleson on December 8, 1998. Submitted on February 16, 2000.

TABLE 7—EPA-APPROVED PIMA COUNTY AIR POLLUTION CONTROL REGULATIONS

County citation	Title/subject	State effective date	EPA approval date	Additional explanation
Pre-1976 Rule Codification Regulation I—General Provisions				
Rule 2	Definitions	February 20, 1975	May 11, 1977, 42 FR 23802.	Submitted on February 20, 1975.
Rule 3	Standard Conditions.	December 20, 1971	July 27, 1972, 37 FR 15080.	Submitted on May 26, 1972.
Rule 19	Decisions of Hearing Board; Subpoenas; Effective Date.	December 20, 1971	July 27, 1972, 37 FR 15080.	Submitted on May 26, 1972.
Rule 20	Judicial Review; Grounds; Procedures.	December 20, 1971	July 27, 1972, 37 FR 15080.	Submitted on May 26, 1972.
Rule 21	Notice of Hearing; Publication; Service.	December 20, 1971	July 27, 1972, 37 FR 15080.	Submitted on May 26, 1972.
Rule 22	Hearing Board Fees	December 20, 1971	July 27, 1972, 37 FR 15080.	Submitted on May 26, 1972.
Regulation II—Emissions Prohibited				
Rule 2B	Emissions of Particulate Matter.	March 19, 1974	September 19, 1977, 42 FR 46926.	Submitted on March 19, 1974.
Rule 3	Emissions of Gases, Vapors, Fumes or Odors.	December 20, 1971	July 27, 1972, 37 FR 15080.	Submitted on May 26, 1972.
Rule 5	Organic Solvents	December 20, 1971	July 27, 1972, 37 FR 15080.	Submitted on May 26, 1972.
Rule 7	Emissions of Certain Sulfur Compounds.	December 20, 1971	July 27, 1972, 37 FR 15080.	Submitted on May 26, 1972.
1976–1978 Rule Codification Regulation I—General Provisions				
Rule 2, paragraphs uu–yy.	Definitions	June 21, 1976	July 19, 1977, 42 FR 36998.	Submitted on September 30, 1976.
Regulation II—Fuel Burning Equipment				
Rule 2G (Paragraphs 1–4c).	Particulate Emissions.	June 21, 1976	July 19, 1977, 42 FR 36998.	Submitted on September 30, 1976.
Rule 7A (Paragraph 1).	Sulfur Dioxide Emissions.	June 21, 1976	July 19, 1977, 42 FR 36998.	Submitted on September 30, 1976. Paragraphs 2 to 5 were disapproved. See 42 FR 36998 (July 19, 1977).
Rule 7B (Paragraph 1).	Nitrogen Oxide Emissions.	June 21, 1976	July 19, 1977, 42 FR 36998.	Submitted on September 30, 1976.
Regulation VII—New Source Performance Standards				
Regulation VII (Paragraphs A–D).	Standards of Performance for New Stationary Sources.	June 21, 1976	July 19, 1977, 42 FR 36998.	Submitted on September 30, 1976.

TABLE 7—EPA-APPROVED PIMA COUNTY AIR POLLUTION CONTROL REGULATIONS—Continued

County citation	Title/subject	State effective date	EPA approval date	Additional explanation
Regulation VIII—National Emission Standards for Hazardous Air Pollutants				
Regulation VIII (Paragraphs A–C).	Emissions Standards for Hazardous Air Pollutants.	June 21, 1976	July 19, 1977, 42 FR 36998.	Submitted on September 30, 1976.
1979–1993 Rule Codification Chapter I: General Provisions				
Rule 101	Declaration of Policy.	August 17, 1979	April 16, 1982, 47 FR 16326.	Submitted on October 9, 1979.
Rule 102	Purpose	August 17, 1979	April 16, 1982, 47 FR 16326.	Submitted on October 9, 1979.
Rule 103	Authority	August 17, 1979	April 16, 1982, 47 FR 16326.	Submitted on October 9, 1979.
Rule 111	General Applicability.	August 17, 1979	April 16, 1982, 47 FR 16326.	Submitted on October 9, 1979.
Rule 112	State and/or County	August 17, 1979	April 16, 1982, 47 FR 16326.	Submitted on October 9, 1979.
Rule 113	Limitations	August 17, 1979	April 16, 1982, 47 FR 16326.	Submitted on October 9, 1979.
Rule 121	Air Quality Control District.	August 17, 1979	April 16, 1982, 47 FR 16326.	Submitted on October 9, 1979.
Rule 122	Executive Head	August 17, 1979	April 16, 1982, 47 FR 16326.	Submitted on October 9, 1979.
Rule 123	Governing Body	August 17, 1979	April 16, 1982, 47 FR 16326.	Submitted on October 9, 1979.
Rule 151	Severability Clause	August 17, 1979	April 16, 1982, 47 FR 16326.	Submitted on October 9, 1979.
Rule 161	Format	August 17, 1979	April 16, 1982, 47 FR 16326.	Submitted on October 9, 1979.
Rule 162	Headings and Special Type.	August 17, 1979	April 16, 1982, 47 FR 16326.	Submitted on October 9, 1979.
Rule 163	Use of Number and Gender.	August 17, 1979	April 16, 1982, 47 FR 16326.	Submitted on October 9, 1979.
Rule 165	Effective Date	August 17, 1979	April 16, 1982, 47 FR 16326.	Submitted on October 9, 1979.
Rule 166	Adoption by Reference.	December 6, 1983	August 10, 1988, 53 FR 30220; vacated; restored on January 29, 1991, 56 FR 3219.	Submitted on October 18, 1985.†
Rule 171	Words, Phrases, and Terms.	December 6, 1983	August 10, 1988, 53 FR 30220; vacated; restored on January 29, 1991, 56 FR 3219.	Submitted on October 18, 1985.†

TABLE 7—EPA-APPROVED PIMA COUNTY AIR POLLUTION CONTROL REGULATIONS—Continued

County citation	Title/subject	State effective date	EPA approval date	Additional explanation
Rule 171 [paragraphs B.1 (''Air Contaminant or Air Pollutant'', B.1.a (''Common Air Pollutant''), B.7 (''Emission or Emissions''), B.8 (''Source or Existing Source''), C.1.a (''Existing Source''), C.1.b (''New Source''), C.2.a (''Major Source''), C.2.c (''New Major Source''), C.2.d (''Modification or Alteration''), C.3.a (''Stationary Source''), E.1.b (''Lowest Achievable Emission Rate'')].	Words, Phrases, and Terms.	August 17, 1979	July 7, 1982, 47 FR 29532.	Submitted on October 9, 1979.
Rule 172	Meanings of Mathematical Symbols.	August 17, 1979	April 16, 1982, 47 FR 16326.	Submitted on October 9, 1979.
Rule 173	Chemical Symbols and Abbreviations.	August 17, 1979	April 16, 1982, 47 FR 16326.	Submitted on October 9, 1979.
Rule 174	Scientific Units	August 17, 1979	April 16, 1982, 47 FR 16326.	Submitted on October 9, 1979.
Rule 175	Acronyms	December 6, 1983	August 10, 1988, 53 FR 30220; vacated; restored on January 29, 1991, 56 FR 3219.	Submitted on October 18, 1985.†
		Chapter II: Permits		
Rule 201	Statutory Authority	August 17, 1979	April 16, 1982, 47 FR 16326.	Submitted on October 9, 1979.
Rule 202, paragraph D only.	Installation Permits	December 6, 1983	August 10, 1988, 53 FR 30220; vacated; restored on January 29, 1991, 56 FR 3219.	Submitted on October 18, 1985.†
Rule 202	Installation Permits	August 17, 1979	April 16, 1982, 47 FR 16326.	Submitted on October 9, 1979.
Rule 203	Operating Permits ..	August 17, 1979	April 16, 1982, 47 FR 16326.	Submitted on October 9, 1979.
Rule 211	Permit Application ..	August 17, 1979	April 16, 1982, 47 FR 16326.	Submitted on October 9, 1979.
Rule 212	Sampling, Testing, and Analysis Requirements.	August 17, 1979	April 16, 1982, 47 FR 16326.	Submitted on October 9, 1979.
Rule 213	Public Notification/ Public Comments.	August 17, 1979	April 16, 1982, 47 FR 16326.	Submitted on October 9, 1979.
Rule 215	Permit Revocation	August 17, 1979	April 16, 1982, 47 FR 16326.	Submitted on October 9, 1979.

TABLE 7—EPA-APPROVED PIMA COUNTY AIR POLLUTION CONTROL REGULATIONS—Continued

County citation	Title/subject	State effective date	EPA approval date	Additional explanation
Rule 221	General Control	August 17, 1979	April 16, 1982, 47 FR 16326.	Submitted on October 9, 1979.
Rule 222	Permit Display or Posting.	August 17, 1979	April 16, 1982, 47 FR 16326.	Submitted on October 9, 1979.
Rule 223	Permit Transferability.	August 17, 1979	April 16, 1982, 47 FR 16326.	Submitted on October 9, 1979.
Rule 224	Fugitive Dust Producing Activities.	August 17, 1979	April 16, 1982, 47 FR 16326.	Submitted on October 9, 1979.
Rule 225	Open Burning Permit Conditions.	August 17, 1979	April 16, 1982, 47 FR 16326.	Submitted on October 9, 1979.
Rule 226	Permits for State-Delegated Emission Sources.	August 17, 1979	April 16, 1982, 47 FR 16326.	Submitted on October 9, 1979.
Rule 231	Non-Compliance	August 17, 1979	April 16, 1982, 47 FR 16326.	Submitted on October 9, 1979.
Rule 232	Notification of Denial.	August 17, 1979	April 16, 1982, 47 FR 16326.	Submitted on October 9, 1979.
Rule 241	General Provisions	August 17, 1979	April 16, 1982, 47 FR 16326.	Submitted on October 9, 1979.
Rule 242	Installation Permit Fees/Non-Fee Requirements.	June 1, 1981	April 16, 1982, 47 FR 16326.	Submitted on June 1, 1981.
Rule 243	Open Burning Permit Fees.	August 17, 1979	April 16, 1982, 47 FR 16326.	Submitted on October 9, 1979.
Rule 244	Operating Permit Fees.	August 17, 1979	April 16, 1982, 47 FR 16326.	Submitted on October 9, 1979.
Rule 251	Permit Fee Studies Related to Inflation.	August 17, 1979	April 16, 1982, 47 FR 16326.	Submitted on October 9, 1979.
Rule 252	Periodic Review of Individual Fee Schedules.	August 17, 1979	April 16, 1982, 47 FR 16326.	Submitted on October 9, 1979.
Rule 261	Compliance Inspections.	June 1, 1981	April 16, 1982, 47 FR 16326.	Submitted on June 1, 1981.
Tables Cited by Rules in Chapter II				
Table 242	Activity Installation Permit Requirements for Construction/Destruction Activities.	August 17, 1979	April 16, 1982, 47 FR 16326.	Submitted on October 9, 1979.
Table 243	Open Burning Permit Fee Schedules.	June 1, 1981	April 16, 1982, 47 FR 16326.	Submitted on June 1, 1981.
Table 244–A	Equipment Operating Permit Fee Schedules for Categorical Sources.	June 1, 1981	April 16, 1982, 47 FR 16326.	Submitted on June 1, 1981.
Table 244–B	Equipment Operating Permit Fee Schedules for Non-Categorical Sources.	June 1, 1981	April 16, 1982, 47 FR 16326.	Submitted on June 1, 1981.
Table 244–C	Activity Operating Permit Fee Requirements.	August 17, 1979	April 16, 1982, 47 FR 16326.	Submitted on October 9, 1979.

TABLE 7—EPA-APPROVED PIMA COUNTY AIR POLLUTION CONTROL REGULATIONS—Continued

County citation	Title/subject	State effective date	EPA approval date	Additional explanation
Chapter III: Universal Control Standards				
Rule 301	Planning, Constructing, or Operating Without a Permit.	August 17, 1979	April 16, 1982, 47 FR 16326.	Submitted on October 9, 1979.
Rule 302	Non-Compliance with Applicable Standards.	August 17, 1979	April 16, 1982, 47 FR 16326.	Submitted on October 9, 1979.
Rule 312	Asphalt Kettles	August 17, 1979	April 16, 1982, 47 FR 16326.	Submitted on October 9, 1979.
Rule 313	Incinerators	August 17, 1979	April 16, 1982, 47 FR 16326.	Submitted on October 9, 1979.
Rule 314	Petroleum Liquids	August 17, 1979	April 16, 1982, 47 FR 16326.	Submitted on October 9, 1979.
Rule 315	Roads and Streets	August 17, 1979	April 16, 1982, 47 FR 16326.	Submitted on October 9, 1979.
Rule 316	Particulate Materials.	August 17, 1979	April 16, 1982, 47 FR 16326.	Submitted on October 9, 1979.
Rule 318	Vacant Lots and Open Spaces.	August 17, 1979	April 16, 1982, 47 FR 16326.	Submitted on October 9, 1979.
Rule 321	Standards and Applicability.	August 17, 1979	April 16, 1982, 47 FR 16326.	Submitted on October 9, 1979.
Rule 331	Applicability	August 17, 1979	April 16, 1982, 47 FR 16326.	Submitted on October 9, 1979.
Rule 332	Compilation of Mass Rates and Concentrations.	August 17, 1979	April 16, 1982, 47 FR 16326.	Submitted on October 9, 1979.
Rule 341	Applicability	August 17, 1979	April 16, 1982, 47 FR 16326.	Submitted on October 9, 1979.
Rule 342	Mass—Concentration Ceilings.	August 17, 1979	April 16, 1982, 47 FR 16326.	Submitted on October 9, 1979.
Rule 343	Visibility Limiting Standards.	August 17, 1979	April 16, 1982, 47 FR 16326.	Submitted on October 9, 1979.
Rule 344	Odor Limiting Standards.	August 17, 1979	April 16, 1982, 47 FR 16326.	Submitted on October 9, 1979.
Rule 371	Tucson Nonattainment Areas.	December 6, 1983	August 10, 1988, 53 FR 30220; vacated; restored on January 29, 1991, 56 FR 3219.	Submitted on October 18, 1985.†
Rule 372	Ajo Area	December 6, 1983	August 10, 1988, 53 FR 30220; vacated; restored on January 29, 1991, 56 FR 3219.	Submitted on October 18, 1985.†
Rule 373	General County Areas.	December 6, 1983	August 10, 1988, 53 FR 30220; vacated; restored on January 29, 1991, 56 FR 3219.	Submitted on October 18, 1985.†
Figure 371–A	Tucson Nonattainment Area for Total Suspended Particulates.	December 6, 1983	August 10, 1988, 53 FR 30220; vacated; restored on January 29, 1991, 56 FR 3219.	Submitted on October 18, 1985.†

TABLE 7—EPA-APPROVED PIMA COUNTY AIR POLLUTION CONTROL REGULATIONS—Continued

County citation	Title/subject	State effective date	EPA approval date	Additional explanation
Figure 371–C	Tucson Nonattainment Area for Carbon Monoxide.	December 6, 1983	August 10, 1988, 53 FR 30220; vacated; restored on January 29, 1991, 56 FR 3219.	Submitted on October 18, 1985.†
Figure 372	Approximate Boundaries of Ajo Area.	December 6, 1983	August 10, 1988, 53 FR 30220; vacated; restored on January 29, 1991, 56 FR 3219.	Submitted on October 18, 1985.†
Rule 381, paragraph A, subparagraphs 1, 2, 3, 4, and 5, and paragraph B only.	ADHS Nonattainment-Area Standards.	December 6, 1983	August 10, 1988, 53 FR 30220; vacated; restored on January 29, 1991, 56 FR 3219.	Submitted on October 18, 1985.†
Tables Cited by Rules in Chapter III				
Table 321, excluding the "Asbestos-Containing Operation" standards.	Emissions-Discharge Opacity Limiting Standards.	August 17, 1979	April 16, 1982, 47 FR 16326.	Approval excludes the "Asbestos-Containing Operation" standards. Submitted on October 9, 1979.
Table 332, excluding lines (h)–(m).	Emissions-Discharge Mass Limiting Standards.	August 17, 1979	April 16, 1982, 47 FR 16326.	Approval excludes lines (h)–(m). Submitted on October 9, 1979.
Table 341, excluding the Beryllium ceilings.	Maximum Allowable Pollutant-Concentration Ceilings in Ambient Air.	August 17, 1979	April 16, 1982, 47 FR 16326.	Approval excludes the beryllium ceilings. Submitted on October 9, 1979.
Chapter IV: Performance Standards for New Major Sources				
Rule 402	Stack and Shop Emissions.	August 17, 1979	April 16, 1982, 47 FR 16326.	Submitted on October 9, 1979.
Rule 403	Applicability of More Than One Standard.	August 17, 1979	April 16, 1982, 47 FR 16326.	Submitted on October 9, 1979.
Rule 411	Tucson Area	August 17, 1979	April 16, 1982, 47 FR 16326.	Submitted on October 9, 1979.
Rule 412	Ajo Area	August 17, 1979	April 16, 1982, 47 FR 16326.	Submitted on October 9, 1979.
Rule 413	General County Areas.	August 17, 1979	April 16, 1982, 47 FR 16326.	Submitted on October 9, 1979.
Rule 421	Applicability	August 17, 1979	July 7, 1982, 47 FR 29532.	Submitted on October 9, 1979.
Rule 422	TSP Clean Air Plan	August 17, 1979	July 7, 1982, 47 FR 29532.	Submitted on October 9, 1979.
Rule 423	TSP Emission Data Bank.	August 17, 1979	July 7, 1982, 47 FR 29532.	Submitted on October 9, 1979.
Rule 424	Emission Offset Requirement.	August 17, 1979	July 7, 1982, 47 FR 29532.	Submitted on October 9, 1979.
Rule 425	Lowest Achievable Emission Rate.	August 17, 1979	July 7, 1982, 47 FR 29532.	Submitted on October 9, 1979.

TABLE 7—EPA-APPROVED PIMA COUNTY AIR POLLUTION CONTROL REGULATIONS—Continued

County citation	Title/subject	State effective date	EPA approval date	Additional explanation
Rule 426	Existing Sources in Compliance.	August 17, 1979	July 7, 1982, 47 FR 29532.	Submitted on October 9, 1979.
Chapter V: Testing and Monitoring				
Rule 501	Applicability of Methodology.	August 17, 1979	April 16, 1982, 47 FR 16326.	Submitted on October 9, 1979.
Rule 502	Testing Frequencies.	August 17, 1979	April 16, 1982, 47 FR 16326.	Submitted on October 9, 1979.
Rule 503	Notification; Fees	August 17, 1979	April 16, 1982, 47 FR 16326.	Submitted on October 9, 1979.
Rule 504, part E, paragraph 2.	Pre-Installation Testing or Modeling Requirements.	August 17, 1979	July 7, 1982, 47 FR 29532.	Submitted on June 1, 1981.
Rule 504	Pre-Installation Testing or Modeling Requirements.	August 17, 1979	July 7, 1982, 47 FR 29532.	Submitted on October 9, 1979.
Rule 505	Sampling and Testing Facilities.	August 17, 1979	April 16, 1982, 47 FR 16326.	Submitted on October 9, 1979.
Rule 506	Stack Sampling	August 17, 1979	April 16, 1982, 47 FR 16326.	Submitted on October 9, 1979.
Rule 507	Waiver of Test Requirements.	August 17, 1979	April 16, 1982, 47 FR 16326.	Submitted on October 9, 1979.
Rule 511	General Requirements.	August 17, 1979	April 16, 1982, 47 FR 16326.	Submitted on October 9, 1979.
Rule 512	In-Stack Monitoring	August 17, 1979	April 16, 1982, 47 FR 16326.	Submitted on October 9, 1979.
Chapter VI: Recordkeeping and Reporting				
Regulation 60 (''Classification of Pollutants''), Rule 601.	Classification of Common and Hazardous Air Pollutants.	August 17, 1979	April 16, 1982, 47 FR 16326.	Submitted on October 9, 1979.
Rule 611, paragraph A only.	Recordkeeping for Compliance Determinations.	June 1, 1981	April 16, 1982, 47 FR 16326.	Approval included paragraph A only. Submitted on June 1, 1981.
Rule 611, paragraphs A.1 to A.3 only.	Recordkeeping for Compliance Determinations.	August 17, 1979	April 16, 1982, 47 FR 16326.	Approval included paragraphs A.1 to A.3 only. Submitted on October 9, 1979.
Rule 612	Recordkeeping for Emissions Inventories.	August 17, 1979	April 16, 1982, 47 FR 16326.	Submitted on October 9, 1979.
Rule 621	Reporting for Compliance Evaluations.	August 17, 1979	April 16, 1982, 47 FR 16326.	Submitted on October 9, 1979.
Rule 622	Reporting as a Permit Requirement.	August 17, 1979	April 16, 1982, 47 FR 16326.	Submitted on October 9, 1979.
Rule 623	Reporting for Emissions Inventories.	August 17, 1979	April 16, 1982, 47 FR 16326.	Submitted on October 9, 1979.
Rule 624	Reporting for TSP Emission Data Bank.	August 17, 1979	April 16, 1982, 47 FR 16326.	Submitted on October 9, 1979.

TABLE 7—EPA-APPROVED PIMA COUNTY AIR POLLUTION CONTROL REGULATIONS—Continued

County citation	Title/subject	State effective date	EPA approval date	Additional explanation
Rule 631	Confidentiality of Trade Secrets, Sales Data, and Proprietary Information.	August 17, 1979	April 16, 1982, 47 FR 16326.	Submitted on October 9, 1979.
Rule 641	Suppression; False Information.	August 17, 1979	April 16, 1982, 47 FR 16326.	Submitted on October 9, 1979.
Tables Cited by Rules in Chapter VI				
Table 603	Methodology for Entering Records of Emissions into TSP Data Bank.	August 17, 1979	April 16, 1982, 47 FR 16326.	Submitted on October 9, 1979.
Chapter VII: Violations and Judicial Procedures				
Rule 701	Criminal Complaint	August 17, 1979	April 16, 1982, 47 FR 16326.	Submitted on October 9, 1979.
Rule 703	Injunction	August 17, 1979	April 16, 1982, 47 FR 16326.	Submitted on October 9, 1979.
Rule 704	Precedence of Actions.	August 17, 1979	April 16, 1982, 47 FR 16326.	Submitted on October 9, 1979.
Rule 705	Penalties	August 17, 1979	April 16, 1982, 47 FR 16326.	Submitted on October 9, 1979.
Rule 706, paragraphs D.1 and D.2 only.	Reviews for Start-up, Shutdown, or Malfunctions.	August 17, 1979	April 16, 1982, 47 FR 16326.	Approval included paragraphs D.1 and D.2 only. Submitted on June 1, 1981.
Rule 706, paragraphs A to C, D.3, D.4, and E only.	Reviews for Start-up, Shutdown, or Malfunctions.	August 17, 1979	April 16, 1982, 47 FR 16326.	Approval included paragraphs A to C, D.3, D.4, and E only. Submitted on October 9, 1979.
Rule 721	Evasion of Basic Requirements.	August 17, 1979	April 16, 1982, 47 FR 16326.	Submitted on October 9, 1979.
Rule 722	Concealment of Emissions.	August 17, 1979	April 16, 1982, 47 FR 16326.	Submitted on October 9, 1979.
Chapter VIII: Emergency Episodes and Public Awareness				
Rule 801	State Jurisdiction	August 17, 1979	April 16, 1982, 47 FR 16326.	Submitted on October 9, 1979.
Rule 802	Determination of Emergency Conditions.	August 17, 1979	April 16, 1982, 47 FR 16326.	Submitted on October 9, 1979.
Rule 803	Emergency Episode Reporting.	August 17, 1979	April 16, 1982, 47 FR 16326.	Submitted on October 9, 1979.
Rule 804	Enforcement Actions.	August 17, 1979	April 16, 1982, 47 FR 16326.	Submitted on October 9, 1979.
Rule 811	Continuous Monitoring of Ambient Air Pollution.	August 17, 1979	April 16, 1982, 47 FR 16326.	Submitted on October 9, 1979.
Rule 821	Reports to the Public.	August 17, 1979	April 16, 1982, 47 FR 16326.	Submitted on October 9, 1979.
Rule 822	General Information	August 17, 1979	April 16, 1982, 47 FR 16326.	Submitted on October 9, 1979.
Rule 823	Public Participation in Rulemaking.	August 17, 1979	April 16, 1982, 47 FR 16326.	Submitted on October 9, 1979.

TABLE 7—EPA-APPROVED PIMA COUNTY AIR POLLUTION CONTROL REGULATIONS—Continued

County citation	Title/subject	State effective date	EPA approval date	Additional explanation
Tables Cited by Rules in Chapter VIII				
Table 802	Air Pollution Episode Criteria.	August 17, 1979	April 16, 1982, 47 FR 16326.	Submitted on October 9, 1979.
Table 804	Possible Control Actions During Various Stages of an Air Pollution Episode.	August 17, 1979	April 16, 1982, 47 FR 16326.	Submitted on October 9, 1979.
Chapter IX: Appendix				
Rule 901	General Affidavit of Delegation.	August 17, 1979	April 16, 1982, 47 FR 16326.	Submitted on October 9, 1979.
Rule 902	Political Sub-Divisions Delegation.	August 17, 1979	April 16, 1982, 47 FR 16326.	Submitted on October 9, 1979.
Rule 903	Large Power Plants Delegation.	August 17, 1979	April 16, 1982, 47 FR 16326.	Submitted on October 9, 1979.
Rule 904	Unpaved Roads Delegation.	August 17, 1979	April 16, 1982, 47 FR 16326.	Submitted on October 9, 1979.
Rule 911 (''Emissions Discharge Testing for Common Air Pollutants''), Method 1.	Sample and Velocity Traverses for Stationary Sources.	August 17, 1979	April 16, 1982, 47 FR 16326.	Submitted on October 9, 1979.
Rule 911 (''Emissions Discharge Testing for Common Air Pollutants''), Method 2.	Determination of Stack Gas Velocity and Volumetric Flow Rate (Type S Pitot Tube).	August 17, 1979	April 16, 1982, 47 FR 16326.	Submitted on October 9, 1979.
Rule 911 (''Emissions Discharge Testing for Common Air Pollutants''), Method 3.	Gas Analysis for Carbon Dioxide, Excess Air, and Dry Molecular Weight.	August 17, 1979	April 16, 1982, 47 FR 16326.	Submitted on October 9, 1979.
Rule 911 (''Emissions Discharge Testing for Common Air Pollutants''), Method 4.	Determination of Moisture in Stack Gases.	August 17, 1979	April 16, 1982, 47 FR 16326.	Submitted on October 9, 1979.
Rule 911 (''Emissions Discharge Testing for Common Air Pollutants''), Method 5.	Determination of Particulate Emissions from Stationary Sources.	August 17, 1979	April 16, 1982, 47 FR 16326.	Submitted on October 9, 1979.
Rule 911 (''Emissions Discharge Testing for Common Air Pollutants''), Method 6.	Determination of Sulfur Dioxide Emissions from Stationary Sources.	August 17, 1979	April 16, 1982, 47 FR 16326.	Submitted on October 9, 1979.
Rule 911 (''Emissions Discharge Testing for Common Air Pollutants''), Method 7.	Determination of Nitrogen Oxide Emissions from Stationary Sources.	August 17, 1979	April 16, 1982, 47 FR 16326.	Submitted on October 9, 1979.
Rule 911 (''Emissions Discharge Testing for Common Air Pollutants''), Method 8.	Determination of Sulfuric Acid Mist and Sulfur Dioxide Emissions from Stationary Sources.	August 17, 1979	April 16, 1982, 47 FR 16326.	Submitted on October 9, 1979.

TABLE 7—EPA-APPROVED PIMA COUNTY AIR POLLUTION CONTROL REGULATIONS—Continued

County citation	Title/subject	State effective date	EPA approval date	Additional explanation
Rule 911 (''Emissions Discharge Testing for Common Air Pollutants''), Method 9.	Visual Determination of the Opacity of Emissions from Stationary Sources.	August 17, 1979	April 16, 1982, 47 FR 16326.	Submitted on October 9, 1979.
Rule 911 (''Emissions Discharge Testing for Common Air Pollutants''), Method 10.	Determination of Carbon Monoxide Emissions from Stationary Sources.	August 17, 1979	April 16, 1982, 47 FR 16326.	Submitted on October 9, 1979.
Rule 911 (''Emissions Discharge Testing for Common Air Pollutants''), Method 11.	Determination of Hydrogen Sulfide Emissions from Stationary Sources.	August 17, 1979	April 16, 1982, 47 FR 16326.	Submitted on October 9, 1979.
Rule 911 (''Emissions Discharge Testing for Common Air Pollutants''), Method 16.	Semi-Continuous Determination of Sulfur Emissions from Stationary Sources.	August 17, 1979	April 16, 1982, 47 FR 16326.	Submitted on October 9, 1979.
Rule 911 (''Emissions Discharge Testing for Common Air Pollutants''), Method 17.	Determination of Particulate Emissions from Stationary Sources (In-Stack Filtration Method).	August 17, 1979	April 16, 1982, 47 FR 16326.	Submitted on October 9, 1979.
Rule 911 (''Emissions Discharge Testing for Common Air Pollutants''), Method 19.	Determination of Sulfur Dioxide Removal Efficiency and Particulate, Sulfur Dioxide and Nitrogen Oxides Emission Rates from Electric Utility Steam Generators.	June 1, 1981	April 16, 1982, 47 FR 16326.	Submitted on June 1, 1981.
Rule 911 (''Emissions Discharge Testing for Common Air Pollutants''), Method 20.	Determination of Nitrogen Oxides, Sulfur Dioxide and Oxygen Emissions from Stationary Gas Turbines.	June 1, 1981	April 16, 1982, 47 FR 16326.	Submitted on June 1, 1981.
Rule 913 (''Ambient Air Testing for Common Air Pollutants''), Method A.	Reference Method for the Determination of Sulfur Dioxide in the Atmosphere (Pararosaniline Method).	August 17, 1979	April 16, 1982, 47 FR 16326.	Submitted on October 9, 1979.
Rule 913 (''Ambient Air Testing for Common Air Pollutants''), Method B.	Reference Method for the Determination of Suspended Particulates in the Atmosphere (High Volume Method).	August 17, 1979	April 16, 1982, 47 FR 16326.	Submitted on October 9, 1979.

TABLE 7—EPA-APPROVED PIMA COUNTY AIR POLLUTION CONTROL REGULATIONS—Continued

County citation	Title/subject	State effective date	EPA approval date	Additional explanation
Rule 913 (''Ambient Air Testing for Common Air Pollutants''), Method C.	Measurement Principle and Calibration Procedure for the Continuous Measurement of Carbon Monoxide in the Atmosphere (Non-Dispersive Infrared Spectrometry).	August 17, 1979	April 16, 1982, 47 FR 16326.	Submitted on October 9, 1979.
Rule 913 (''Ambient Air Testing for Common Air Pollutants''), Method D.	Measurement Principle and Calibration Procedure for the Measurement of Ozone in the Atmosphere.	August 17, 1979	April 16, 1982, 47 FR 16326.	Submitted on October 9, 1979.
Rule 913 (''Ambient Air Testing for Common Air Pollutants''), Method E.	Reference Method for Determination of Hydrocarbons Corrected for Methane.	August 17, 1979	April 16, 1982, 47 FR 16326.	Submitted on October 9, 1979.
Rule 913 (''Ambient Air Testing for Common Air Pollutants''), Method F.	Measurement Principle and Calibration Procedure for the Measurement of Nitrogen Dioxide in the Atmosphere (Gas Phase Chemiluminescence).	August 17, 1979	April 16, 1982, 47 FR 16326.	Submitted on October 9, 1979.
Rule 913 (''Ambient Air Testing for Common Air Pollutants''), Method G.	Reference Method for the Determination of Lead in Suspended Particulate Matter collected from Ambient Air.	August 17, 1979	April 16, 1982, 47 FR 16326.	Submitted on October 9, 1979.
Rule 913 (''Ambient Air Testing for Common Air Pollutants''), Method H.	Interpretation of the National Ambient Air Quality Standards for Ozone.	August 17, 1979	April 16, 1982, 47 FR 16326.	Submitted on October 9, 1979.
Rule 921	General Specifications.	August 17, 1979	April 16, 1982, 47 FR 16326.	Submitted on October 9, 1979.
Rule 922	Performance Specification 1 (Opacity).	August 17, 1979	April 16, 1982, 47 FR 16326.	Submitted on October 9, 1979.
Rule 923	Performance Specification 2 (SO_2 and NO_X).	August 17, 1979	April 16, 1982, 47 FR 16326.	Submitted on October 9, 1979.
Rule 924	Performance Specification 3 (CO_2 and O_2).	August 17, 1979	April 16, 1982, 47 FR 16326.	Submitted on October 9, 1979.
Rule 931	Guideline on Air Quality Models.	August 17, 1979	April 16, 1982, 47 FR 16326.	Submitted on October 9, 1979.
Rule 932	Workbook for Comparison of Air Quality Models.	August 17, 1979	April 16, 1982, 47 FR 16326.	Submitted on October 9, 1979.

TABLE 7—EPA-APPROVED PIMA COUNTY AIR POLLUTION CONTROL REGULATIONS—Continued

County citation	Title/subject	State effective date	EPA approval date	Additional explanation
Post–1993 Rule Codification Pima County Code Title 17. Air Quality Control Chapter 12. Permits and Permit Revisions Article V. Open Burning Permits				
17.12.480	Open burning permits.	October 19, 2004 ...	May 16, 2006, 71 FR 28270.	Submitted on December 30, 2004.

† Vacated by the U.S. Court of Appeals for the Ninth Circuit in *Delaney* v. *EPA,* 898 F.2d 687 (9th Cir. 1990). Restored on January 29, 1991, 56 FR 3219.

TABLE 8—EPA-APPROVED ORDINANCES ADOPTED BY PIMA COUNTY AND OTHER LOCAL JURISDICTIONS WITHIN PIMA COUNTY

County citation	Title/subject	State effective date	EPA approval date	Additional explanation
Pima County Ordinance No. 1988–72.	Travel Reduction Ordinance.	April 18, 1988	January 29, 1991, 56 FR 3219.	Submitted on May 26, 1988.
City of Tucson Ordinance No. 6914.	Travel Reduction Ordinance.	April 18, 1988	January 29, 1991, 56 FR 3219.	Submitted on May 26, 1988.
City of South Tucson Ordinance 88–01.	Travel Reduction Code	April 18, 1988	January 29, 1991, 56 FR 3219.	Adopted through Resolutions No. 88–01 and 88–05.
Town of Marana Ordinance No. 88–06.	Travel Reduction Code	April 18, 1988	January 29, 1991, 56 FR 3219.	Adopted through Resolutions No. 88–06 and 88–07. Submitted on May 26, 1988.
Town of Oro Valley Ordinance No. 162.	Travel Reduction Code	April 18, 1988	January 29, 1991, 56 FR 3219.	Adopted through Resolutions No. 162, 326 and 327.

TABLE 9—EPA-APPROVED PINAL COUNTY AIR POLLUTION CONTROL REGULATIONS

County citation	Title/subject	State effective date	EPA approval date	Additional explanation
Pinal-Gila Counties Air Pollution Control District Regulations				
7–3–1.4(C)	Incineration	August 7, 1980	April 12, 1982, 47 FR 15579.	Adopted by Pinal-Gila Counties Air Quality Control District. Submitted on August 7, 1980. Deleted with respect to Gila County only July 25, 2001, 66 FR 38565.
7–3–1.4 (Excluding Paragraph C).	Particulate Emissions—Incineration.	March 19, 1974	November 15, 1978, 43 FR 53031.	Adopted by Pinal-Gila Counties Air Quality Control District. EPA disapproved paragraph C. Submitted on July 1, 1975. Deleted with respect to Gila County only July 25, 2001, 66 FR 38565.

TABLE 9—EPA-APPROVED PINAL COUNTY AIR POLLUTION CONTROL REGULATIONS—Continued

County citation	Title/subject	State effective date	EPA approval date	Additional explanation
7–3–1.5	Particulate Emissions—Wood Waste Burners.	March 19, 1974	November 15, 1978, 43 FR 53031.	Adopted by Pinal-Gila Counties Air Quality Control District. Submitted on July 1, 1975. Deleted with respect to Gila County only July 25, 2001, 66 FR 38565.
7–3–1.7(F)	Fuel burning equipment.	August 7, 1980	April 12, 1982, 47 FR 15579.	Adopted by Pinal-Gila Counties Air Quality Control District. Submitted on August 7, 1980. Deleted with respect to Gila County only July 25, 2001, 66 FR 38565.
7–3–1.7 (Excluding Paragraph F).	Particulate Emissions—Fuel Burning Equipment.	March 19, 1974	November 15, 1978, 43 FR 53031.	Adopted by Pinal-Gila Counties Air Quality Control District. EPA disapproved paragraph F. Submitted on July 1, 1975. Deleted with respect to Gila County only July 25, 2001, 66 FR 38565.
7–3–2.4	SO_2 Emissions—Sulfuric Acid Plants.	March 19, 1974	November 15, 1978, 43 FR 53031.	Adopted by Pinal-Gila Counties Air Quality Control District. Submitted on July 1, 1975. Deleted with respect to Gila County only July 25, 2001, 66 FR 38565.
7–3–5.1	NO_2 Emissions—Fuel Burning Equipment.	March 19, 1974	November 15, 1978, 43 FR 53031.	Adopted by Pinal-Gila Counties Air Quality Control District. Submitted on July 1, 1975. Deleted with respect to Gila County only July 25, 2001, 66 FR 38565.

TABLE 9—EPA-APPROVED PINAL COUNTY AIR POLLUTION CONTROL REGULATIONS—Continued

County citation	Title/subject	State effective date	EPA approval date	Additional explanation
7–3–5.2	NO_2 Emissions—Nitric Acid Plants.	March 19, 1974	November 15, 1978, 43 FR 53031.	Adopted by Pinal-Gila Counties Air Quality Control District. Submitted on July 1, 1975. Deleted with respect to Gila County only July 25, 2001, 66 FR 38565.
Pinal County Air Quality Control District Regulations Chapter 1. General Provisions and Definitions				
1–1–010	Declaration of policy.	February 22, 1995	April 9, 1996, 61 FR 15717.	Submitted on November 27, 1995.
1–1–020	Air Quality Control District.	June 29, 1993	April 9, 1996, 61 FR 15717.	Submitted on November 27, 1995.
1–1–030	Executive head	June 29, 1993	April 9, 1996, 61 FR 15717.	Submitted on November 27, 1995.
1–1–040	Investigative authority.	June 29, 1993	April 9, 1996, 61 FR 15717.	Submitted on November 27, 1995.
1–1–060	Authority to study, cooperate and hold public hearings.	June 29, 1993	April 9, 1996, 61 FR 15717.	Submitted on November 27, 1995.
1–1–070	Severability clause	June 29, 1993	April 9, 1996, 61 FR 15717.	Submitted on November 27, 1995.
1–1–080	Preservation of rights.	June 29, 1993	April 9, 1996, 61 FR 15717.	Submitted on November 27, 1995.
1–1–090	Copies and effective date.	November 3, 1993	April 9, 1996, 61 FR 15717.	Submitted on November 27, 1995.
1–1–100	Selecting interpretations.	June 29, 1993	April 9, 1996, 61 FR 15717.	Submitted on November 27, 1995.
1–1–106	Jurisdictional Statement.	February 22, 1995	April 9, 1996, 61 FR 15717.	Submitted on November 27, 1995.
1–2–110	Adopted document(s).	June 29, 1993	April 9, 1996, 61 FR 15717.	Submitted on November 27, 1995.
1–2–120	Adoptions by reference.	November 3, 1993	April 9, 1996, 61 FR 15717.	Submitted on November 27, 1995.
1–3–140	Definitions, 74, Hearing Board.	July 23, 2014	August 10, 2015, 80 FR 47859.	Adopted by the Pinal County Board of Supervisors through Resolution No. 072314–AQ1. Includes new text that is underlined and excludes removed text which was struck by the board. Submitted by ADEQ on September 4, 2014.
1–3–140	Definitions	July 29, 1998	November 13, 2002, 67 FR 68764.	Submitted on October 7, 1998.

TABLE 9—EPA-APPROVED PINAL COUNTY AIR POLLUTION CONTROL REGULATIONS—Continued

County citation	Title/subject	State effective date	EPA approval date	Additional explanation
Chapter 2. Ambient Air Quality Standards				
2–1–010	Purpose	June 29, 1993	April 9, 1996, 61 FR 15717.	Submitted on November 27, 1995.
2–1–020	Particulate matter	June 29, 1993	April 9, 1996, 61 FR 15717.	Submitted on November 27, 1995.
2–1–030	Sulfur oxide (sulfur dioxide).	June 29, 1993	April 9, 1996, 61 FR 15717.	Submitted on November 27, 1995.
2–1–040	Ozone	June 29, 1993	April 9, 1996, 61 FR 15717.	Submitted on November 27, 1995.
2–1–050	Carbon monoxide	June 29, 1993	April 9, 1996, 61 FR 15717.	Submitted on November 27, 1995.
2–1–060	Nitrogen dioxide	June 29, 1993	April 9, 1996, 61 FR 15717.	Submitted on November 27, 1995.
2–1–070	Lead	June 29, 1993	April 9, 1996, 61 FR 15717.	Submitted on November 27, 1995.
2–2–080	Air quality monitoring methods.	June 29, 1993	April 9, 1996, 61 FR 15717.	Submitted on November 27, 1995.
2–2–090	Air quality monitoring procedures.	June 29, 1993	April 9, 1996, 61 FR 15717.	Submitted on November 27, 1995.
2–3–100	Interpretation of ambient air quality standards.	June 29, 1993	April 9, 1996, 61 FR 15717.	Submitted on November 27, 1995.
2–3–110	Evaluation of air quality data.	June 29, 1993	April 9, 1996, 61 FR 15717.	Submitted on November 27, 1995.
2–4–120	Purpose	June 29, 1993	April 9, 1996, 61 FR 15717.	Relates to attainment area classifications. Submitted on November 27, 1995.
2–4–130	Adopted document(s).	June 29, 1993	April 9, 1996, 61 FR 15717.	Submitted on November 27, 1995.
2–4–140	Area classifications within Pinal County.	June 29, 1993	April 9, 1996, 61 FR 15717.	Submitted on November 27, 1995.
2–4–150	Attainment status in Pinal County.	June 29, 1993	April 9, 1996, 61 FR 15717.	Submitted on November 27, 1995.
2–5–160	Ambient air increment ceilings.	October 12, 1995	April 9, 1996, 61 FR 15717.	Submitted on November 27, 1995.
2–5–170	Baseline concentration.	June 29, 1993	April 9, 1996, 61 FR 15717.	Submitted on November 27, 1995.
2–5–180	Baseline date	October 12, 1995	April 9, 1996, 61 FR 15717.	Submitted on November 27, 1995.
2–5–190	Baseline area	February 22, 1995	April 9, 1996, 61 FR 15717.	Submitted on November 27, 1995.
2–5–200	Exemptions	February 22, 1995	April 9, 1996, 61 FR 15717.	Submitted on November 27, 1995.
2–5–210	Violations of maximum allowable increases.	June 29, 1993	April 9, 1996, 61 FR 15717.	Submitted on November 27, 1995.
2–6–220	Violations of national ambient air quality standards.	June 29, 1993	April 9, 1996, 61 FR 15717.	Submitted on November 27, 1995.
2–7–230	Purpose	June 29, 1993	April 9, 1996, 61 FR 15717.	Relates to air pollution emergency episodes. Submitted on November 27, 1995.
2–7–240	Episode procedures guidelines.	June 29, 1993	April 9, 1996, 61 FR 15717.	Submitted on November 27, 1995.

TABLE 9—EPA-APPROVED PINAL COUNTY AIR POLLUTION CONTROL REGULATIONS—Continued

County citation	Title/subject	State effective date	EPA approval date	Additional explanation
2–7–250	Definitions	June 29, 1993	April 9, 1996, 61 FR 15717.	Relates to air pollution emergency episodes. Submitted on November 27, 1995.
2–7–260	Standards	June 29, 1993	April 9, 1996, 61 FR 15717.	Relates to air pollution emergency episodes. Submitted on November 27, 1995.
2–7–270	Administrative requirements.	June 29, 1993	April 9, 1996, 61 FR 15717.	Relates to air pollution emergency episodes. Submitted on November 27, 1995.
2–8–280	General	June 29, 1993	April 28, 2004, 69 FR 23103.	Relates to limits on visible emissions. Submitted on November 27, 1995.
2–8–290	Definitions	June 29, 1993	April 28, 2004, 69 FR 23103.	Relates to limits on visible emissions. Submitted on November 27, 1995.
2–8–300	Performance Standards.	May 18, 2005	March 27, 2006, 71 FR 15043.	Relates to limits on visible emissions. Submitted on September 12, 2005.
2–8–302	Performance Standards—Hayden PM_{10} Nonattainment Area.	January 7, 2009	April 6, 2010, 75 FR 17307.	Submitted on June 12, 2009.
2–8–310	Exemptions	June 29, 1993	April 28, 2004, 69 FR 23103.	Relates to limits on visible emissions. Submitted on November 27, 1995.
2–8–320	Monitoring and records.	June 29, 1993	April 28, 2004, 69 FR 23103.	Relates to limits on visible emissions. Submitted on November 27, 1995.
Chapter 3. Permits and Permit Revisions				
3–1–010	Purpose	November 3, 1993	April 9, 1996, 61 FR 15717.	Submitted on November 27, 1995.
3–1–030	Definitions	November 3, 1993	April 9, 1996, 61 FR 15717.	Submitted on November 27, 1995.
3–1–040	Applicability and classes of permits.	October 12, 1995	April 9, 1996, 61 FR 15717.	Submitted on November 27, 1995.
3–1–042	Operating authority and obligations for a source subject to permit reopening.	February 22, 1995	April 9, 1996, 61 FR 15717.	Submitted on November 27, 1995.
3–1–050	Permit application requirements.	October 12, 1995	April 9, 1996, 61 FR 15717.	Submitted on November 27, 1995.
3–1–055	Completeness determination.	November 3, 1993	April 9, 1996, 61 FR 15717.	Submitted on November 27, 1995.
3–1–060	Permit application review process.	February 22, 1995	April 9, 1996, 61 FR 15717.	Submitted on November 27, 1995.

TABLE 9—EPA-APPROVED PINAL COUNTY AIR POLLUTION CONTROL REGULATIONS—Continued

County citation	Title/subject	State effective date	EPA approval date	Additional explanation
3–1–065	Permit review by the EPA and affected states.	November 3, 1993	April 9, 1996, 61 FR 15717.	Submitted on November 27, 1995.
3–1–070	Permit application grant or denial.	November 3, 1993	April 9, 1996, 61 FR 15717.	Submitted on November 27, 1995.
3–1–081	Permit conditions	February 22, 1995	April 9, 1996, 61 FR 15717.	Submitted on November 27, 1995.
3–1–082	Emission standards and limitations.	November 3, 1993	April 9, 1996, 61 FR 15717.	Submitted on November 27, 1995.
3–1–083	Compliance provisions.	February 22, 1995	April 9, 1996, 61 FR 15717.	Submitted on November 27, 1995.
3–1–084	Voluntarily Accepted Federal Enforceable Emission Limitations: Applicability; Reopening; Effective Date.	February 22, 1995	December 20, 2000, 65 FR 79742.	Submitted on November 27, 1995.
3–1–085	Notice by building permit agencies.	November 3, 1993	April 9, 1996, 61 FR 15717.	Submitted on November 27, 1995.
3–1–087	Permit reopening, reissuance and termination.	November 3, 1993	April 9, 1996, 61 FR 15717.	Submitted on November 27, 1995.
3–1–089	Permit term, renewal and expiration.	February 22, 1995	April 9, 1996, 61 FR 15717.	Submitted on November 27, 1995.
3–1–090	Permit transfer	November 3, 1993	April 9, 1996, 61 FR 15717.	Submitted on November 27, 1995.
3–1–102	Permit shields	November 3, 1993	April 9, 1996, 61 FR 15717.	Submitted on November 27, 1995.
3–1–103	Annual emissions inventory questionnaire.	February 22, 1995	April 9, 1996, 61 FR 15717.	Submitted on November 27, 1995.
3–1–105	Permits containing the terms and conditions of federal delayed compliance orders (DCO) or consent decree.	November 3, 1993	April 9, 1996, 61 FR 15717.	Submitted on November 27, 1995.
3–1–107	Public notice and participation.	February 22, 1995	December 20, 2000, 65 FR 79742.	Submitted on November 27, 1995.
3–1–109	Material permit condition.	February 22, 1995	April 9, 1996, 61 FR 15717.	Submitted on November 27, 1995.
3–1–110	Investigative authority.	November 3, 1993	April 9, 1996, 61 FR 15717.	Submitted on November 27, 1995.
3–1–120	Confidentiality of records.	November 3, 1993	April 9, 1996, 61 FR 15717.	Submitted on November 27, 1995.
3–1–132	Permit imposed right of entry.	June 29, 1993	April 9, 1996, 61 FR 15717.	Submitted on November 27, 1995.
3–1–140	Permit revocation	November 3, 1993	April 9, 1996, 61 FR 15717.	Submitted on November 27, 1995.
3–1–150	Monitoring	November 3, 1993	April 9, 1996, 61 FR 15717.	Submitted on November 27, 1995.
3–1–160	Test methods and procedures.	November 3, 1993	April 9, 1996, 61 FR 15717.	Submitted on November 27, 1995.
3–1–170	Performance tests	November 3, 1993	April 9, 1996, 61 FR 15717.	Submitted on November 27, 1995.
3–1–173	Quality assurance	November 3, 1993	April 9, 1996, 61 FR 15717.	Submitted on November 27, 1995.

TABLE 9—EPA-APPROVED PINAL COUNTY AIR POLLUTION CONTROL REGULATIONS—Continued

County citation	Title/subject	State effective date	EPA approval date	Additional explanation
3–1–175	Certification of truth, accuracy and completeness.	November 3, 1993	April 9, 1996, 61 FR 15717.	Submitted on November 27, 1995.
3–1–177	Stack height limitation.	November 3, 1993	April 9, 1996, 61 FR 15717.	Submitted on November 27, 1995.
3–2–180	Facility changes allowed without permit revisions.	November 3, 1993	April 9, 1996, 61 FR 15717.	Submitted on November 27, 1995.
3–2–185	Administrative permit amendments.	November 3, 1993	April 9, 1996, 61 FR 15717.	Submitted on November 27, 1995.
3–2–190	Minor permit revisions.	November 3, 1993	April 9, 1996, 61 FR 15717.	Submitted on November 27, 1995.
3–2–195	Significant permit revisions.	November 3, 1993	April 9, 1996, 61 FR 15717.	Submitted on November 27, 1995.
3–3–200	Purpose	November 3, 1993	April 9, 1996, 61 FR 15717.	Relates to permit requirements for new major sources and major modifications to existing major sources. Submitted on November 27, 1995.
3–3–203	Definitions	November 3, 1993	April 9, 1996, 61 FR 15717.	Relates to permit requirements for new major sources and major modifications to existing major sources. Submitted on November 27, 1995.
3–3–205	Application requirements.	November 3, 1993	April 9, 1996, 61 FR 15717.	Relates to permit requirements for new major sources and major modifications to existing major sources. Submitted on November 27, 1995.
3–3–210	Application review process.	February 22, 1995	April 9, 1996, 61 FR 15717.	Relates to permit requirements for new major sources and major modifications to existing major sources. Submitted on November 27, 1995.
3–3–250	Permit and permit revision requirements for sources located in attainment and unclassifiable areas.	February 22, 1995	April 9, 1996, 61 FR 15717.	Relates to permit requirements for new major sources and major modifications to existing major sources. Submitted on November 27, 1995.

TABLE 9—EPA-APPROVED PINAL COUNTY AIR POLLUTION CONTROL REGULATIONS—Continued

County citation	Title/subject	State effective date	EPA approval date	Additional explanation
3–3–260	Air quality impact analysis and monitoring requirements.	November 3, 1993	April 9, 1996, 61 FR 15717.	Relates to permit requirements for new major sources and major modifications to existing major sources. Submitted on November 27, 1995.
3–3–270	Innovative control technology.	November 3, 1993	April 9, 1996, 61 FR 15717.	Relates to permit requirements for new major sources and major modifications to existing major sources. Submitted on November 27, 1995.
3–3–275	Air quality models	November 3, 1993	April 9, 1996, 61 FR 15717.	Relates to permit requirements for new major sources and major modifications to existing major sources. Submitted on November 27, 1995.
3–3–280	Visibility protection	November 3, 1993	April 9, 1996, 61 FR 15717.	Relates to permit requirements for new major sources and major modifications to existing major sources. Submitted on November 27, 1995.
3–8–700	General Provisions	October 27, 2004	May 16, 2006, 71 FR 28270.	Relates to open burning. Submitted on December 30, 2004.
3–8–710	Permit Provisions and Administration.	October 27, 2004	May 16, 2006, 71 FR 28270.	Relates to open burning. Submitted on December 30, 2004.
Chapter 4. Emissions from Existing and New Non-Point Sources				
4–1–010	General Applicability.	January 1, 2016	May 1, 2017, 82 FR 20267.	Submitted on December 21, 2015 as ''Chapter 4, Article 1''.
4–1–015	Exemptions	January 1, 2016	May 1, 2017, 82 FR 20267.	Submitted on December 21, 2015 as ''Chapter 4, Article 1''.
4–1–020	Definitions	January 1, 2016	May 1, 2017, 82 FR 20267.	Submitted on December 21, 2015 as ''Chapter 4, Article 1''.

TABLE 9—EPA-APPROVED PINAL COUNTY AIR POLLUTION CONTROL REGULATIONS—Continued

County citation	Title/subject	State effective date	EPA approval date	Additional explanation
4–1–030	Standards	January 1, 2016	May 1, 2017, 82 FR 20267.	Submitted on December 21, 2015 as ''Chapter 4, Article 1''.
4–1–040	Recordkeeping	January 1, 2016	May 1, 2017, 82 FR 20267.	Submitted on December 21, 2015 as ''Chapter 4, Article 1''.
4–1–045	Reporting Requirements.	January 1, 2016	May 1, 2017, 82 FR 20267.	Submitted on December 21, 2015 as ''Chapter 4, Article 1''.
4–1–050	Records Retention	January 1, 2016	May 1, 2017, 82 FR 20267.	Submitted on December 21, 2015 as ''Chapter 4, Article 1''.
4–1–060	Violations	January 1, 2016	May 1, 2017, 82 FR 20267.	Submitted on December 21, 2015 as ''Chapter 4, Article 1''.
4–2–020	Fugitive Dust—General.	December 4, 2002	April 6, 2010, 75 FR 17307.	Submitted on June 12, 2009.
4–2–030	Fugitive Dust—Definitions.	December 4, 2002	April 6, 2010, 75 FR 17307.	Submitted on June 12, 2009.
4–2–040	Standards	June 29, 1993	August 1, 2007, 72 FR 41896.	Relates to fugitive dust. Submitted on November 27, 1995.
4–2–050	Monitoring and Records.	May 14, 1997	August 1, 2007, 72 FR 41896.	Relates to fugitive dust. Submitted on October 7, 1998.
4–3–160	General Provisions—West Pinal PM_{10} Nonattainment Area.	January 1, 2016	May 1, 2017, 82 FR 20267.	Submitted on December 21, 2015 as ''Chapter 4, Article 3''.
4–3–170	Definitions	January 1, 2016	May 1, 2017, 82 FR 20267.	Submitted on December 21, 2015 as ''Chapter 4, Article 3''.
4–3–180	Dust Generating Operations Standards, Application, Permit and Recordkeeping Requirements.	January 1, 2016	May 1, 2017, 82 FR 20267.	Submitted on December 21, 2015 as ''Chapter 4, Article 3''.
4–3–190	Violations	January 1, 2016	May 1, 2017, 82 FR 20267.	Submitted on December 21, 2015 as ''Chapter 4, Article 3''.

TABLE 9—EPA-APPROVED PINAL COUNTY AIR POLLUTION CONTROL REGULATIONS—Continued

County citation	Title/subject	State effective date	EPA approval date	Additional explanation
4–4–100	General Provisions	October 1, 2009	April 6, 2010, 75 FR 17307.	Relates to PM–10 Non-attainment Area Rules; Dustproofing and Stabilization for Commercial Unpaved Parking, Drive and Working Yards. Submitted on June 12, 2009.
4–4–110	Definitions	October 1, 2009	April 6, 2010, 75 FR 17307.	Relates to PM–10 Non-attainment Area Rules; Dustproofing and Stabilization for Commercial Unpaved Parking, Drive and Working Yards. Submitted on June 12, 2009.
4–4–120	Objective Standards	October 1, 2009	April 6, 2010, 75 FR 17307.	Relates to PM–10 Non-attainment Area Rules; Dustproofing and Stabilization for Commercial Unpaved Parking, Drive and Working Yards. Submitted on June 12, 2009.
4–4–130	Work Practice Standards.	October 1, 2009	April 6, 2010, 75 FR 17307.	Relates to PM–10 Non-attainment Area Rules; Dustproofing and Stabilization for Commercial Unpaved Parking, Drive and Working Yards. Submitted on June 12, 2009.
4–4–140	Recordkeeping and Records Retention.	October 1, 2009	April 6, 2010, 75 FR 17307.	Relates to PM–10 Non-attainment Area Rules; Dustproofing and Stabilization for Commercial Unpaved Parking, Drive and Working Yards. Submitted on June 12, 2009.

TABLE 9—EPA-APPROVED PINAL COUNTY AIR POLLUTION CONTROL REGULATIONS—Continued

County citation	Title/subject	State effective date	EPA approval date	Additional explanation
4–5–150	Stabilization for Residential Parking and Drives; Applicability.	October 1, 2009	April 6, 2010, 75 FR 17307.	Relates to PM–10 Non-attainment Area Rules; Stabilization for Residential Parking and Drives. Submitted on June 12, 2009.
4–5–160	Residential Parking Control Requirement.	October 1, 2009	April 6, 2010, 75 FR 17307.	Relates to PM–10 Non-attainment Area Rules; Stabilization for Residential Parking and Drives. Submitted on June 12, 2009.
4–5–170	Deferred enforcement date.	October 1, 2009	April 6, 2010, 75 FR 17307.	Relates to PM–10 Non-attainment Area Rules; Stabilization for Residential Parking and Drives. Submitted on June 12, 2009.
4–7–210	Definitions	June 3, 2009	April 6, 2010, 75 FR 17307.	Relates to Construction Sites in Non-Attainment Areas—Fugitive Dust. Submitted on June 12, 2009.
4–7–214	General Provisions	June 3, 2009	April 6, 2010, 75 FR 17307.	Relates to Construction Sites in Non-Attainment Areas—Fugitive Dust. Submitted on June 12, 2009.
4–7–218	Applicability; Development Activity.	June 3, 2009	April 6, 2010, 75 FR 17307.	Relates to Construction Sites in Non-Attainment Areas—Fugitive Dust. Submitted on June 12, 2009.
4–7–222	Owner and/or Operator Liability.	June 3, 2009	April 6, 2010, 75 FR 17307.	Relates to Construction Sites in Non-Attainment Areas—Fugitive Dust. Submitted on June 12, 2009.
4–7–226	Objective Standards; Sites.	June 3, 2009	April 6, 2010, 75 FR 17307.	Relates to Construction Sites in Non-Attainment Areas—Fugitive Dust. Submitted on June 12, 2009.

TABLE 9—EPA-APPROVED PINAL COUNTY AIR POLLUTION CONTROL REGULATIONS—Continued

County citation	Title/subject	State effective date	EPA approval date	Additional explanation
4–7–230	Obligatory Work Practice Standards; Sites.	June 3, 2009	April 6, 2010, 75 FR 17307.	Relates to Construction Sites in Non-Attainment Areas—Fugitive Dust. Submitted on June 12, 2009.
4–7–234	Nonattainment-Area Dust Permit Program; General Provisions.	June 3, 2009	April 6, 2010, 75 FR 17307.	Relates to Construction Sites in Non-Attainment Areas—Fugitive Dust. Submitted on June 12, 2009.
4–7–238	Nonattainment Area Site Permits.	June 3, 2009	April 6, 2010, 75 FR 17307.	Relates to Construction Sites in Non-Attainment Areas—Fugitive Dust. Submitted on June 12, 2009.
4–7–242	Nonattainment Area Block Permits.	June 3, 2009	April 6, 2010, 75 FR 17307.	Relates to Construction Sites in Non-Attainment Areas—Fugitive Dust. Submitted on June 12, 2009.
4–7–246	Recordkeeping and Records Retention.	June 3, 2009	April 6, 2010, 75 FR 17307.	Relates to Construction Sites in Non-Attainment Areas—Fugitive Dust. Submitted on June 12, 2009.
4–9–320	Test Methods for Stabilization for Unpaved Roads and Unpaved Parking Lots.	June 3, 2009	April 6, 2010, 75 FR 17307.	Submitted on June 12, 2009.
4–9–340	Visual Opacity Test Methods.	June 3, 2009	April 6, 2010, 75 FR 17307.	Submitted on June 12, 2009.
Chapter 5. Stationary Source Performance Standards				
5–18–740	Storage of Volatile Organic Compounds—Organic Compound Emissions.	February 22, 1995	December 26, 2000, 65 FR 81371.	Submitted on November 27, 1995.
5–19–800	General	February 22, 1995	December 26, 2000, 65 FR 81371.	Relates to loading of organic liquids. Submitted on November 27, 1995.
5–22–950	Fossil Fuel Fired Steam Generator Standard Applicability.	February 22, 1995	September 29, 2000, 65 FR 58359.	Submitted on November 27, 1995.

TABLE 9—EPA-APPROVED PINAL COUNTY AIR POLLUTION CONTROL REGULATIONS—Continued

County citation	Title/subject	State effective date	EPA approval date	Additional explanation
5–22–960	Fossil Fuel Fired Steam Generator Sulfur Dioxide Emission Limitation.	February 22, 1995	September 29, 2000, 65 FR 58359.	Submitted on November 27, 1995.
5–24–1032	Federally Enforceable Minimum Standard of Performance—Process Particulate Emissions.	February 22, 1995	April 17, 2012, 77 FR 22676.	Submitted on November 27, 1995.
5–24–1040	Carbon Monoxide Emissions—Industrial Processes.	February 22, 1995	April 28, 2004, 69 FR 23103.	Submitted on November 27, 1995.
5–24–1045	Sulfite Pulp Mills—Sulfur Compound Emissions.	February 22, 1995	September 29, 2000, 65 FR 58359.	Submitted on November 27, 1995.
5–24–1055	Pumps and Compressors—Organic Compound Emissions.	February 22, 1995	December 26, 2000, 65 FR 81371.	Submitted on November 27, 1995.

(d) *EPA-approved source-specific requirements.*

EPA-APPROVED SOURCE-SPECIFIC REQUIREMENTS

Name of source	Order/permit No.	Effective date	EPA approval date	Explanation
Arizona Department of Environmental Quality				
Arizona Electric Power Cooperative's Apache Generating Station.	Significant Revision No. 59195 to Air Quality Control Permit No. 55412, excluding section V.D.	May 13, 2014	April 10, 2015, 80 FR 19220.	Permit issued by the Arizona Department of Environmental Quality. Submitted on May 13, 2014.
Cholla Power Plant	Significant Permit Revision No. 61713 to Operating Permit No. 53399.	October 16, 2015	March 27, 2017, 82 FR 15139.	Permit issued by Arizona Department of Environmental Quality. Submitted on October 22, 2015.
Coronado Generating Station.	Permit #64169 (as amended by Significant Revision #63088) Cover Page and Attachment "E": BART Alternatives.	November 9, 2017	October 10, 2017, 82 FR 46903.	Permit issued by Arizona Department of Environmental Quality. Submitted on December 15, 2016.
Maricopa County Air Quality Department				
W.R. Meadows of Arizona, Inc., Goodyear, Arizona.	V98–0004, condition 23.	February 17, 2005	June 14, 2005, 70 FR 34357.	Permit issued by the Maricopa County Air Quality Department. Submitted on April 20, 2005.

(e) *EPA-approved Arizona nonregulatory provisions and quasi-regulatory measures.*

TABLE 1—EPA-APPROVED NON-REGULATORY AND QUASI-REGULATORY MEASURES

[Excluding certain resolutions and statutes, which are listed in tables 2 and 3, respectively] [1]

Name of SIP provision	Applicable geographic or non-attainment area or title/subject	State submittal date	EPA approval date	Explanation
The State of Arizona Air Pollution Control Implementation Plan Clean Air Act Section 110(a)(2) State Implementation Plan Elements (Excluding Part D Elements and Plans)				
Chapter 1—Introduction.	State-wide	May 26, 1972	July 27, 1972, 37 FR 15080.	Submittal letter is dated May 26, 1972; received by EPA on May 30, 1972.
Appendix G—Policy Statement on Air Pollution Control.	State-wide	May 26, 1972	July 27, 1972, 37 FR 15080.	Submittal letter is dated May 26, 1972; received by EPA on May 30, 1972.
Chapter 2—Legal Authority, excluding section 2.9 (''Jurisdiction over Indian Lands'').	State-wide	May 26, 1972	July 27, 1972, 37 FR 15080.	Submittal letter is dated May 26, 1972; received by EPA on May 30, 1972. See table 1 of subsection (c) and table 3 of subsection (e). Section 2.9 was deleted without replacement at 81 FR 7209 (February 11, 2016).
Assertion of State Jurisdiction over Apache, Navajo, Santa Cruz, and Yavapai Counties; Assertion of State Jurisdiction over Cochise County; and Assertion of State Jurisdiction over specific sources in Mohave County.	Apache, Navajo, Santa Cruz, Yavapai, Cochise, and Mohave Counties.	February 3, 1975	July 31, 1978, 43 FR 33245.	
Chapter 3—Air Quality Data.	State-wide	May 26, 1972	July 27, 1972, 37 FR 15080.	Submittal letter is dated May 26, 1972; received by EPA on May 30, 1972.
Chapter 4—Emission Data.	State-wide	May 26, 1972	July 27, 1972, 37 FR 15080.	Submittal letter is dated May 26, 1972; received by EPA on May 30, 1972.
Chapter 5—Air Quality Surveillance Network (February 1980).	State-wide	February 15, 1980	August 10, 1981, 46 FR 40512.	

TABLE 1—EPA-APPROVED NON-REGULATORY AND QUASI-REGULATORY MEASURES—Continued

[Excluding certain resolutions and statutes, which are listed in tables 2 and 3, respectively] [1]

Name of SIP provision	Applicable geographic or nonattainment area or title/subject	State submittal date	EPA approval date	Explanation
Chapter 6—Control Strategy.	State-wide	May 26, 1972	July 27, 1972, 37 FR 15080.	SIP elements developed to address CAA requirements in designated nonattainment areas as well as maintenance plans are listed at the end of this table.
Chapter 7—Compliance Schedules.	State-wide	May 26, 1972	July 27, 1972, 37 FR 15080.	Submittal letter is dated May 26, 1972; received by EPA on May 30, 1972.
Chapter 8—Emergency Episode Prevention.	State-wide	May 26, 1972	July 27, 1972, 37 FR 15080.	Submittal letter is dated May 26, 1972; received by EPA on May 30, 1972.
Appendix E—Emergency Episode Communications Manual.	State-wide	May 26, 1972	July 27, 1972, 37 FR 15080.	Submittal letter is dated May 26, 1972; received by EPA on May 30, 1972.
Chapter 9—Review of New Sources and Modifications.	State-wide	May 26, 1972	July 27, 1972, 37 FR 15080.	Submittal letter is dated May 26, 1972; received by EPA on May 30, 1972.
Setting Applicability Thresholds, pages 1547–1549 in Appendix A to ''State Implementation Plan Revision: New Source Review'' adopted on October 29, 2012.	State-wide	Submitted on October 29, 2012, and supplemented on September 6, 2013 and July 2, 2014.	November 2, 2015, 80 FR 67319.	
Memorandum, ''Proposed Final Permits to be Treated as Appealable Agency Actions,'' dated February 10, 2015, from Eric Massey, Air Quality Division Director to Balaji Vaidyanathan, Permit Section Manager, submitted on February 23, 2015..	State-wide	Submitted on October 29, 2012, and supplemented on September 6, 2013 and July 2, 2014.	November 2, 2015, 80 FR 67319.	

TABLE 1—EPA-APPROVED NON-REGULATORY AND QUASI-REGULATORY MEASURES—Continued

[Excluding certain resolutions and statutes, which are listed in tables 2 and 3, respectively] [1]

Name of SIP provision	Applicable geographic or nonattainment area or title/subject	State submittal date	EPA approval date	Explanation
''State Implementation Plan Revision: New Source Review—Supplement,'' relating to the division of jurisdiction for New Source Review in Arizona, adopted on July 2, 2014.	State-wide	Submitted on October 29, 2012, and supplemented on September 6, 2013 and July 2, 2014.	November 2, 2015, 80 FR 67319.	
Letter from the Arizona Department of Environmental Quality, dated June 1, 1988, committing to administer the provisions of the Federal New Source Review regulations consistent with EPA's requirements.	State-wide	June 1, 1988	August 10, 1988, 53 FR 30220; vacated; restored on January 29, 1991, 56 FR 3219.	The commitments apply to the issuance of, or revision to, permits for any source which is a major stationary source or major modification as defined in 40 CFR, part 51, subpart I.†
Letter from Maricopa County Department of Health Services, Division of Public Health, dated April 28, 1988, committing to administer the New Source Review provisions of their regulations consistent with EPA's requirements.	Maricopa County	July 25, 1988	August 10, 1988, 53 FR 30224; vacated; restored on January 29, 1991, 56 FR 3219.	The commitments apply to the issuance of, or revision to, permits for any source which is a major stationary source or major modification as defined in 40 CFR, part 51, subpart I.†
Letter from the Pima County Health Department, Office of Environmental Quality, dated April 24, 1988 committing to administer the New Source Review provisions of their regulations consistent with EPA's requirements.	Pima County	July 22, 1988	August 10, 1988, 53 FR 30220; vacated; restored on January 29, 1991, 56 FR 3219.	The commitments apply to the issuance of, or revision to, permits for any source which is a major stationary source or major modification as defined in 40 CFR, part 51, subpart I.†
State Implementation Plan Determination of ''Good Engineering Practice'' Stack Height.	Gila County (Hayden Copper Smelter).	September 20, 1979.	January 14, 1983, 48 FR 1717.	Issued by Arizona Department of Health Services.

TABLE 1—EPA-APPROVED NON-REGULATORY AND QUASI-REGULATORY MEASURES—Continued

[Excluding certain resolutions and statutes, which are listed in tables 2 and 3, respectively] [1]

Name of SIP provision	Applicable geographic or non-attainment area or title/subject	State submittal date	EPA approval date	Explanation
Technical Basis of New Source Review Regulations, Pima County, Arizona, February 6, 1980 (AQ–125-a).	Pima County	February 28, 1980	July 7, 1982, 47 FR 29532.	
Chapter 10—Source Surveillance.	State-wide	May 26, 1972	July 27, 1972, 37 FR 15080.	Submittal letter is dated May 26, 1972; received by EPA on May 30, 1972.
Chapter 11—Rules and Regulations.	State-wide	May 26, 1972	July 27, 1972, 37 FR 15080.	Also, see tables 1 through 6 in section 40 CFR 52.120(c).
Chapter 12—Intergovernmental Cooperation.	State-wide	May 26, 1972	July 27, 1972, 37 FR 15080.	Submittal letter is dated May 26, 1972; received by EPA on May 30, 1972.
Chapter 13—Resources.	State-wide	May 26, 1972	July 27, 1972, 37 FR 15080.	Submittal letter is dated May 26, 1972; received by EPA on May 30, 1972.
Small Business Stationary Source Technical and Environmental Compliance Assistance Program.	State-wide	February 1, 1995	June 15, 1995, 60 FR 31411.	Adopted by the Arizona Department of Environmental Quality on February 1, 1995.
Small Business Stationary Source Technical and Environmental Compliance Assistance Program.	State-wide	November 13, 1992	June 15, 1995, 60 FR 31411.	Adopted by the Arizona Department of Environmental Quality on November 13, 1992.
A Revised Analysis of Lead Emissions and Ambient-Air Concentrations in Pima County, Arizona.	Pima County	September 26, 1980.	June 30, 1982, 47 FR 28374.	
Arizona Lead SIP Revision.	State-wide	April 1, 1980	June 30, 1982, 47 FR 28374.	
Arizona State Implementation Plan Revision to the Arizona Regional Haze Plan for Arizona Public Service Cholla Generating Station.	Source-Specific	October 22, 2015	March 27, 2017, 82 FR 15139.	Revised source-specific BART limits for NO_X for Cholla Power Plant adopted October 22, 2015.

TABLE 1—EPA-APPROVED NON-REGULATORY AND QUASI-REGULATORY MEASURES—Continued

[Excluding certain resolutions and statutes, which are listed in tables 2 and 3, respectively] [1]

Name of SIP provision	Applicable geographic or non-attainment area or title/subject	State submittal date	EPA approval date	Explanation
Arizona State Implementation Plan Revision to the Arizona Regional Haze Plan for the Salt River Project Coronado Generating Station, excluding Appendix B.	Source-Specific	December 15, 2016	October 10, 2017, 82 FR 46903.	BART Alternative for Coronado Generating Station adopted December 14, 2016.
Arizona State Implementation Plan, Revision to the Arizona Regional Haze Plan for Arizona Electric Power Cooperative, Incorporated, Apache Generating Station, excluding the appendices.	Source-Specific	May 13, 2014	April 10, 2015, 80 FR 19220.	Submitted on May 13, 2014.
Arizona State Implementation Plan Revision, Regional Haze Under Section 308 of the Federal Regional Haze Rule (May 2013), excluding:. (i) Chapter 10, section 10.7 (regarding ASARCO Hayden Smelter (PM_{10} emissions) and Chemical Lime Company—Nelson Lime Plant); (ii) Chapter 11, except subsection 11.3.1(3) (“Focus on SO_2 and NO_X pollutants”);	Source-Specific	May 3, 2013	July 30, 2013, 78 FR 46142.	

TABLE 1—EPA-APPROVED NON-REGULATORY AND QUASI-REGULATORY MEASURES—Continued

[Excluding certain resolutions and statutes, which are listed in tables 2 and 3, respectively] [1]

Name of SIP provision	Applicable geographic or non-attainment area or title/subject	State submittal date	EPA approval date	Explanation
(iii) Appendix D: chapter I, except for the footnotes in tables 1.1, 1.2 and 1.3 to the entries for AEPCO [Apache], and the entry in table 1.2 for Freeport-McMoRan Miami Smelter; chapter VI, section C (regarding PM_{10} emissions from ASARCO Hayden smelter); chapter XII, section C, and chapter XIII, subsection D; and				
(iv) Appendix E.				
Arizona State Implementation Plan, Regional Haze Under Section 308 of the Federal Regional Haze Rule (January 2011), excluding:.	Source-Specific	February 28, 2011	July 30, 2013, 78 FR 46142.	

TABLE 1—EPA-APPROVED NON-REGULATORY AND QUASI-REGULATORY MEASURES—Continued

[Excluding certain resolutions and statutes, which are listed in tables 2 and 3, respectively] [1]

Name of SIP provision	Applicable geographic or non-attainment area or title/subject	State submittal date	EPA approval date	Explanation
(i) Chapter 6: table 6.1; chapter 10: sections 10.4, 10.6 (regarding Unit I4 at the Irvington (Sundt) Generating Station), 10.7, and 10.8; chapter 11; chapter 12: sections 12.7.3 (''Emission Limitation and Schedules of Compliance'') and 12.7.6 (''Enforceability of Arizona's Measures''); and chapter 13: section 13.2.3 (''Arizona and Other State Emission Reductions Obligations'');				

TABLE 1—EPA-APPROVED NON-REGULATORY AND QUASI-REGULATORY MEASURES—Continued

[Excluding certain resolutions and statutes, which are listed in tables 2 and 3, respectively] [1]

Name of SIP provision	Applicable geographic or non-attainment area or title/subject	State submittal date	EPA approval date	Explanation
(ii) Appendix D: chapter I; chapter V (regarding Unit I4 at the Irvington (Sundt) Generating Station); chapter VI, sections C and D; chapter VII; chapter IX; chapter X, section E.1; chapter XI, section D; chapter XII, sections B and C; chapter XIII, sections B, C, and D; and chapter XIV, section D; and (iii) Appendix E.				
Arizona State Implementation Plan, Regional Haze Under Section 308 of the Federal Regional Haze Rule: Appendix D, Arizona BART—Supplemental Information:. (i) Table 1.1—NO_X BART, entry for AEPCO [Apache], ST1 [Unit 1] only. (ii) Table 1.2—PM_{10} BART, entries for AEPCO [Apache], APS Cholla Power Plant and SRP Coronado Generating Station.	Source-Specific	February 28, 2011	December 5, 2012, 77 FR 72512.	Certain source-specific Best Available Retrofit Technology (BART) limits at three electric generating stations.

TABLE 1—EPA-APPROVED NON-REGULATORY AND QUASI-REGULATORY MEASURES—Continued

[Excluding certain resolutions and statutes, which are listed in tables 2 and 3, respectively] [1]

Name of SIP provision	Applicable geographic or non-attainment area or title/subject	State submittal date	EPA approval date	Explanation
(iii) Table 1.3—SO_2 BART, entries for AEPCO, APS Cholla Power Plant and SRP Coronado Generating Station.				
Arizona State Implementation Plan Revision under Clean Air Act Section 110(a)(1) and (2); Implementation of the 2008 Lead National Ambient Air Quality Standards, excluding the appendices.	State-wide	October 14, 2011 ...	August 10, 2015, 80 FR 47859.	Adopted by the Arizona Department of Environmental Quality on October 14, 2011.
SIP Revision: Clean Air Act Section 110(a)(2)(D), 2008 Ozone National Ambient Air Quality Standards (December 3, 2015).	State-wide	December 3, 2015	May 19, 2016, 81 FR 31513; correcting amendment on June 6, 2016, 81 FR 31679.	Adopted by the Arizona Department of Environmental Quality on December 3, 2015.
Arizona State Implementation Plan Revision under Clean Air Act Section 110(a)(1) and (2); 2008 8-hour Ozone NAAQS, excluding the appendices.	State-wide	December 27, 2012	August 10, 2015, 80 FR 47859.	Adopted by the Arizona Department of Environmental Quality on December 27, 2012.
Ordinance No. 1993–128, Section 1, 17.040.190 ''Composition'' Section 6, 17.24.040 ''Reporting for compliance evaluations''.	Pima County	December 19, 2013	August 10, 2015, 80 FR 47859.	Adopted by the Board of Supervisors of Pima County, Arizona on September 28, 1993.
Ordinance 2005–43, Chapter 17.12, Permits and Permit Revisions, section 2, 17.12.040 ''Reporting Requirements''.	Pima County	December 19, 2013	August 10, 2015, 80 FR 47859.	Adopted by the Board of Supervisors of Pima County, Arizona on April 19, 2005.

TABLE 1—EPA-APPROVED NON-REGULATORY AND QUASI-REGULATORY MEASURES—Continued

[Excluding certain resolutions and statutes, which are listed in tables 2 and 3, respectively] [1]

Name of SIP provision	Applicable geographic or non-attainment area or title/subject	State submittal date	EPA approval date	Explanation
Arizona State Implementation Plan Revision under Clean Air Act Section 110(a)(1) and (2): Implementation of 2006 $PM_{2.5}$ National Ambient Air Quality Standards, 1997 $PM_{2.5}$ National Ambient Air Quality Standards, and 1997 8-Hour Ozone National Ambient Air Quality Standards, September 2009, excluding the appendices.	State-wide	October 14, 2009	November 5, 2012, 77 FR 66398.	Adopted by the Arizona Department of Environmental Quality on October 14, 2009.
Final Supplement to the Arizona State Implementation Plan under Clean Air Act Section 110(a)(1) and (2): Implementation of 2006 $PM_{2.5}$ National Ambient Air Quality Standards, 1997 $PM_{2.5}$ National Ambient Air Quality Standards, and 1997 8-Hour Ozone National Ambient Air Quality Standards, August 2012, excluding the appendices.	State-wide	August 24, 2012	November 5, 2012, 77 FR 66398.	Adopted by the Arizona Department of Environmental Quality on August 24, 2012.
Revision to the Arizona State Implementation Plan Under Clean Air Act Section 110(a)(2)(D)(i)—Regional Transport (May 2007).	Statewide	May 24, 2007	July 31, 2007, 72 FR 41629.	Interstate Transport SIP adopted by the Arizona Department of Environmental Quality on May 24, 2007.

TABLE 1—EPA-APPROVED NON-REGULATORY AND QUASI-REGULATORY MEASURES—Continued

[Excluding certain resolutions and statutes, which are listed in tables 2 and 3, respectively] [1]

Name of SIP provision	Applicable geographic or nonattainment area or title/subject	State submittal date	EPA approval date	Explanation
Part D Elements and Plans (Other than for the Metropolitan Phoenix or Tucson Areas)				
Arizona State Implementation Plan Revision, Maintenance Plan for the Ajo Sulfur Dioxide Area (1971 NAAQS), (February 2013), excluding Appendix C, "Overview of Point Source Emissions Limits and Potential to Emit".	Ajo Sulfur Dioxide Air Quality Planning Area.	February 22, 2013	1/9/2017, 82 FR 2239.	Adopted by the Arizona Department of Environmental Quality on February 22, 2013. Fulfills requirements for second ten-year maintenance plans. The SIP includes a request to correct the maintenance area boundary.
Ajo Sulfur Dioxide State Implementation and Maintenance Plan.	Ajo Sulfur Dioxide Air Quality Planning Area.	June 18, 2002	November 3, 2003, 68 FR 62239.	Adopted by the Arizona Department of Environmental Quality on June 18, 2002.
Bullhead City Moderate Area PM_{10} Maintenance Plan and Request for Redesignation to Attainment.	Bullhead City PM_{10} Air Quality Planning Area.	February 7, 2002 ...	June 26, 2002, 67 FR 43020.	Adopted by the Arizona Department of Environmental Quality on February 7, 2002.
Douglas Sulfur Dioxide Nonattainment Area State Implementation and Maintenance Plan, dated November 29, 2001.	Douglas Sulfur Dioxide Air Quality Planning Area.	December 14, 2001	February 28, 2006, 71 FR 9941.	Adopted by the Arizona Department of Environmental Quality on December 14, 2001.
Modeling Supplement-Douglas Sulfur Dioxide (SO_2) State Implementation and Maintenance Plan.	Douglas Sulfur Dioxide Air Quality Planning Area.	April 2, 2004	February 28, 2006, 71 FR 9941.	Adopted by the Arizona Department of Environmental Quality on April 2, 2004.
Modeling and Emissions Inventory Supplement for the Douglas Sulfur Dioxide Nonattainment Area State Implementation and Maintenance Plan and Redesignation Request, dated September 2005.	Douglas Sulfur Dioxide Air Quality Planning Area.	September 16, 2005.	February 28, 2006, 71 FR 9941.	Adopted by the Arizona Department of Environmental Quality on September 16, 2005.

TABLE 1—EPA-APPROVED NON-REGULATORY AND QUASI-REGULATORY MEASURES—Continued

[Excluding certain resolutions and statutes, which are listed in tables 2 and 3, respectively] [1]

Name of SIP provision	Applicable geographic or nonattainment area or title/subject	State submittal date	EPA approval date	Explanation
Final Miami Sulfur Dioxide Nonattainment Area State Implementation and Maintenance Plan (June 2002) (revised May 26, 2004), excluding appendix A (''SIP Support Information''), sections A.1 (''Pertinent Sections of the Arizona Administrative Code'') and A.2 (''Information Regarding Revisions to AAC R18–2–715 and R18–2–715.01, 'Standards of Performance for Primary Copper Smelters: Site Specific Requirements; Compliance and Monitoring' ''); and appendix D (''SIP Public Hearing Documentation'').	Miami Sulfur Dioxide Air Quality Planning Area.	June 26, 2002	January 24, 2007, 72 FR 3061.	Adopted by ADEQ on June 26, 2002. Incorporates replacement pages for the cover page and pages iii, 2, 3, 4 and 49 enclosed with letter from ADEQ dated June 30, 2004. Includes a letter from Stephen A. Owens, Director, Arizona Department of Environmental Quality, dated June 20, 2006, withdrawing a section 107(d)(3)(D) boundary redesignation request included in the Miami Sulfur Dioxide Nonattainment Area State Implementation and Maintenance Plan and requesting a section 110(k)(6) error correction.
Arizona State Implementation Plan Revision, Maintenance Plan for the Morenci Sulfur Dioxide Area (1971 NAAQS), (December 2014).	Morenci Sulfur Dioxide Air Quality Planning Area.	December 18, 2014	January 9, 2017, 82 FR 2239.	Adopted by the Arizona Department of Environmental Quality on December 18, 2014. Fulfills requirements for second ten-year maintenance plans.
Morenci Sulfur Dioxide Nonattainment Area State Implementation and Maintenance Plan.	Morenci Sulfur Dioxide Air Quality Planning Area.	June 21, 2002	April 26, 2004, 69 FR 22447.	Adopted by the Arizona Department of Environmental Quality on June 21, 2002.
Final Update of the Limited Maintenance Plan for the Payson PM_{10} Maintenance Area (December 2011).	Payson PM_{10} Air Quality Planning Area.	January 23, 2012 ...	March 19, 2014, 79 FR 15227.	Adopted by the Arizona Department of Environmental Quality on January 23, 2012.

TABLE 1—EPA-APPROVED NON-REGULATORY AND QUASI-REGULATORY MEASURES—Continued

[Excluding certain resolutions and statutes, which are listed in tables 2 and 3, respectively] [1]

Name of SIP provision	Applicable geographic or nonattainment area or title/subject	State submittal date	EPA approval date	Explanation
Payson Moderate Area PM_{10} Maintenance Plan and Request for Redesignation to Attainment.	Payson PM_{10} Air Quality Planning Area.	March 29, 2002	June 26, 2002, 67 FR 43013.	Adopted by the Arizona Department of Environmental Quality on March 29, 2002.
Arizona State Implementation Plan Revision for the Nogales $PM_{2.5}$ Nonattainment Area (September 2013), including appendices A and B.	Nogales $PM_{2.5}$ Nonattainment Area.	September 6, 2013	February 9, 2015, 80 FR 6907.	Adopted by the Arizona Department of Environmental Quality on September 6. 2013.
Final 2012 State Implementation Plan Nogales PM_{10} Nonattainment Area.	Nogales PM_{10} Nonattainment Area.	August 24, 2012	September 25, 2012, 77 FR 58962.	
Final Arizona State Implementation Plan Revision, San Manuel Sulfur Dioxide Nonattainment Area, March 2007.	San Manuel Sulfur Dioxide Nonattainment Area.	June 7, 2007	January 18, 2008, 73 FR 3396.	
San Manuel Sulfur Dioxide Maintenance Plan Renewal, 1971 Sulfur Dioxide National Ambient Air Quality Standards (April 2017).	San Manuel Sulfur Dioxide Air Quality Planning Area.	April 21, 2017	December 15, 2017, 82 FR 59520.	Adopted by the Arizona Department of Environmental Quality on April 21, 2017. Fulfills requirements for second 10-year maintenance plan.
Part D Elements and Plans for the Metropolitan Phoenix and Tucson Areas				
MAG 2014 State Implementation Plan Revision for the Removal of Stage II Vapor Recovery Controls in the Maricopa Eight-Hour Ozone Nonattainment Area (August 2014), excluding appendix A, exhibit 2 (''Arizona Revised Statutes Listed in Table 1–1'').	Maricopa Eight-Hour Ozone Nonattainment Area.	September 2, 2014	November 16, 2015, 80 FR 70689.	Adopted by the Regional Council of the Maricopa Association of Governments on August 27, 2014.

TABLE 1—EPA-APPROVED NON-REGULATORY AND QUASI-REGULATORY MEASURES—Continued

[Excluding certain resolutions and statutes, which are listed in tables 2 and 3, respectively] [1]

Name of SIP provision	Applicable geographic or non-attainment area or title/subject	State submittal date	EPA approval date	Explanation
Final Addendum to the Arizona State Implementation Plan Revision, Exemption of Motorcycles from Vehicle Emissions Inspections and Maintenance Program Requirements in Area A, October 2009 (December 2010).	Area A—i.e., Phoenix metropolitan area.	January 11, 2011 ...	May 22, 2013, 78 FR 30209.	Adopted by the Arizona Department of Environmental Quality on January 11, 2011.
Final Arizona State Implementation Plan Revision, Exemption of Motorcycles from Vehicle Emissions Inspections and Maintenance Program Requirements in Area A (October 2009), excluding appendices A and C.	Area A—i.e., Phoenix metropolitan area.	November 6, 2009	May 22, 2013, 78 FR 30209.	Adopted by the Arizona Department of Environmental Quality on November 6, 2009.
September 2006 Supplement to Final Arizona State Implementation Plan Revision, Basic and Enhanced Vehicle Emissions Inspection/Maintenance Programs, December 2005, excluding appendices.	Areas A and B—i.e., Phoenix and Tucson metropolitan areas.	October 3, 2006	March 30, 2007, 72 FR 15046.	Adopted by the Arizona Department of Environmental Quality on October 3, 2006.
Final Arizona State Implementation Plan Revision, Basic and Enhanced Vehicle Emissions Inspection/Maintenance Programs (December 2005), excluding appendices.	Areas A and B—i.e., Phoenix and Tucson metropolitan areas.	December 23, 2005	March 30, 2007, 72 FR 15046.	Adopted by the Arizona Department of Environmental Quality on December 23, 2005.
MAG 2013 Carbon Monoxide Maintenance Plan for the Maricopa County Area, March 2013.	Maricopa County Carbon Monoxide Air Quality Planning Area.	April 2, 2013	March 3, 2016, 81 FR 11120.	Adopted by the Arizona Department of Environmental Quality on April 2, 2013.

TABLE 1—EPA-APPROVED NON-REGULATORY AND QUASI-REGULATORY MEASURES—Continued

[Excluding certain resolutions and statutes, which are listed in tables 2 and 3, respectively] [1]

Name of SIP provision	Applicable geographic or nonattainment area or title/subject	State submittal date	EPA approval date	Explanation
MAG Carbon Monoxide Redesignation Request and Maintenance Plan for the Maricopa County Nonattainment Area and Appendices, dated May 2003.	Maricopa County Carbon Monoxide Air Quality Planning Area.	June 16, 2003	March 9, 2005, 70 FR 11553.	Adopted by the Arizona Department of Environmental Quality on June 16, 2003.
Revised MAG 1999 Serious Area Carbon Monoxide Plan for the Maricopa County Nonattainment Area, dated March 2001.	Maricopa County Carbon Monoxide Air Quality Planning Area.	April 18, 2001	March 9, 2005, 70 FR 11553.	Adopted by the Maricopa Association of Governments on March 28, 2001 and by the Arizona Department of Environmental Quality on April 18, 2001. March 9, 2005 final rule was corrected at September 6, 2005, 70 FR 52928.
Addendum to MAG 1987 Carbon Monoxide Plan for the Maricopa County Nonattainment Area, July 21, 1988.	Maricopa County	July 22, 1988	August 10, 1988, 53 FR 30224; vacated; restored on January 29, 1991, 56 FR 3219.	Supplemental information related to the SIP revision of July 18, 1988. Vacated by the U.S. Court of Appeals for the Ninth Circuit in *Delaney* v. *EPA.* Control and committal measures were restored on January 29, 1991, 56 FR 3219. EPA disapproved the attainment demonstration, conformity and contingency portions of the 1988 Addendum at 40 CFR 52.124(a)(1). See 56 FR 5458 (February 11, 1991).

TABLE 1—EPA-APPROVED NON-REGULATORY AND QUASI-REGULATORY MEASURES—Continued

[Excluding certain resolutions and statutes, which are listed in tables 2 and 3, respectively] [1]

Name of SIP provision	Applicable geographic or nonattainment area or title/subject	State submittal date	EPA approval date	Explanation
Maricopa Association of Governments (MAG) 1987 Carbon Monoxide (CO) Plan for the Maricopa County Area, MAG CO Plan Commitments for Implementation, and Appendix A through E, Exhibit 4, Exhibit D.	Maricopa County Carbon Monoxide Air Quality Planning Area.	October 5, 1987	August 10, 1988, 53 FR 30224; vacated; restored on January 29, 1991, 56 FR 3219.	Adopted on July 10, 1987. Vacated by the U.S. Court of Appeals for the Ninth Circuit in *Delaney* v. *EPA.* Control and committal measures were restored on January 29, 1991, 56 FR 3219. EPA disapproved the attainment demonstration, conformity and contingency portions of the 1987 MAG CO Plan at 40 CFR 52.124(a)(1). See 56 FR 5458 (February 11, 1991).
MAG 2014 Eight-Hour Ozone Plan—Submittal of Marginal Area Requirements for the Maricopa Nonattainment Area (June 2014), excluding:	Phoenix-Mesa 2008 8-hour ozone nonattainment area.	July 2, 2014	October 16, 2015, 80 FR 62457.	

TABLE 1—EPA-APPROVED NON-REGULATORY AND QUASI-REGULATORY MEASURES—Continued

[Excluding certain resolutions and statutes, which are listed in tables 2 and 3, respectively] [1]

Name of SIP provision	Applicable geographic or nonattainment area or title/subject	State submittal date	EPA approval date	Explanation
(i) Sections titled "A Nonattainment Area Preconstruction Permit Program—CAA section 182 (a)(2)(C)," "New Source Review—CAA, Title I, Part D," and "Offset Requirements: 1:1 to 1 (Ratio of Total Emission Reductions of Volatile Organic Compounds to Total Increased Emissions)—CAA Section 182(a)(4)" on pages 8 and 9 and section titled "Meet Transportation Conformity Requirements—CAA Section 176(c)" on pages 10 and 11. (ii) Appendices A and B.				
MAG Eight-Hour Ozone Redesignation Request and Maintenance Plan for the Maricopa Nonattainment Area (February 2009), excluding the appendices.	Phoenix-Mesa 1997 8-hour ozone maintenance area.	March 23, 2009	September 17, 2014, 79 FR 55645.	Adopted by the Arizona Department of Environmental Quality on March 23, 2009.

TABLE 1—EPA-APPROVED NON-REGULATORY AND QUASI-REGULATORY MEASURES—Continued

[Excluding certain resolutions and statutes, which are listed in tables 2 and 3, respectively] [1]

Name of SIP provision	Applicable geographic or nonattainment area or title/subject	State submittal date	EPA approval date	Explanation
Letter dated June 13, 2007 from Stephen A. Owens, Director, ADEQ to Wayne Nastri, Regional Administrator, United States Environmental Protection Agency, Region IX.	Phoenix-Mesa 1997 8-hour ozone nonattainment area.	June 13, 2007	June 13, 2012, 77 FR 35285.	Transmittal letter for Eight-Hour Ozone Plan for the Maricopa Nonattainment Area (June 2007).
Eight-Hour Ozone Plan for the Maricopa Nonattainment Area (June 2007), including Appendices, Volumes One and Two.	Phoenix-Mesa 1997 8-hour ozone nonattainment area.	June 13, 2007	June 13, 2012, 77 FR 35285.	
One-Hour Ozone Redesignation Request and Maintenance Plan for the Maricopa County Nonattainment Area, dated March 2004.	Maricopa County 1-Hour Ozone Air Quality Planning Area.	April 21, 2004	June 14, 2005, 70 FR 34362.	Adopted by the Maricopa Association of Governments Regional Council on March 26, 2004 and adopted by the Arizona Department of Environmental Quality on April 21, 2004.
Final Serious Area Ozone State Implementation Plan for Maricopa County, dated December 2000.	Maricopa County 1-Hour Ozone Air Quality Planning Area.	December 14, 2000	June 14, 2005, 70 FR 34362.	Adopted by the Arizona Department of Environmental Quality on December 14, 2000.
Letter and enclosures regarding Arizona's Intent to "Opt-out" of the Clean Fuel Fleet Program.	Maricopa County 1-Hour Ozone Air Quality Planning Area.	December 7, 1998	June 14, 2005, 70 FR 34362.	Adopted by the Arizona Department of Environmental Quality on December 7, 1998.
2012 Five Percent Plan for PM–10 for the Maricopa County Nonattainment Area, and Appendices Volume One and Volume Two.	Maricopa County PM–10 Nonattainment Area.	May 25, 2012	June 10, 2014, 79 FR 33107.	Adopted May 23, 2012.
2012 Five Percent Plan for PM–10 for the Pinal County Township 1 North, Range 8 East Nonattainment Area.	Pinal County Township 1 North, Range 8 East Nonattainment Area.	May 25, 2012	June 10, 2014, 79 FR 33107.	Adopted May 25, 2012.

TABLE 1—EPA-APPROVED NON-REGULATORY AND QUASI-REGULATORY MEASURES—Continued

[Excluding certain resolutions and statutes, which are listed in tables 2 and 3, respectively] [1]

Name of SIP provision	Applicable geographic or nonattainment area or title/subject	State submittal date	EPA approval date	Explanation
Nonattainment Area Plan for Total Suspended Particulates, Maricopa County Urban Planning Area.	Maricopa County Urban Planning Area.	November 8, 1979	May 5, 1982, 47 FR 19326.	
Revision to the Nonattainment Area Plan for Carbon Monoxide and Photochemical Oxidants, Maricopa County Urban Planning Area.	Maricopa County Urban Planning Area.	July 3, 1979	May 5, 1982, 47 FR 19326.	
Nonattainment Area Plan for Carbon Monoxide and Photochemical Oxidants, Maricopa County Urban Planning Area.	Maricopa County Urban Planning Area.	February 23, 1979	May 5, 1982, 47 FR 19326.	
Letter supplementing the revised transportation control plan.	Phoenix-Tucson Intrastate Air quality Control Region.	October 2, 1973	December 3, 1973, 38 FR 33368.	
Letter supplementing the revised transportation control plan.	Phoenix-Tucson Intrastate Air quality Control Region.	September 21, 1973.	December 3, 1973, 38 FR 33368.	
Revised transportation control plan.	Phoenix-Tucson Intrastate Air quality Control Region.	September 11, 1973.	December 3, 1973, 38 FR 33368.	EPA approved various transportation control strategies, including certain elements of an inspection program, but disapproved other elements, and approved certain strategies with exception.
2008 Revision to the Carbon Monoxide Limited Maintenance Plan for the Tucson Air Planning Area (for 2010), excluding appendix D.	Tucson Air Planning Area.	July 10, 2008	December 21, 2009, 74 FR 67819.	Adopted by the Pima Association of Governments on June 26, 2008.

TABLE 1—EPA-APPROVED NON-REGULATORY AND QUASI-REGULATORY MEASURES—Continued

[Excluding certain resolutions and statutes, which are listed in tables 2 and 3, respectively] [1]

Name of SIP provision	Applicable geographic or non-attainment area or title/subject	State submittal date	EPA approval date	Explanation
Appendix D (Revised)—Supplement to the Carbon Monoxide Limited Maintenance Plan for the Tucson Air Planning Area (for 2010).	Tucson Air Planning Area.	June 22, 2009	December 21, 2009, 74 FR 67819.	Letter from Arizona Department of Environmental Quality re: Vehicle Emissions Inspection Program (VEIP), Revised to include supporting documents authorizing the VEIP from 2009 to 2017. Adopted by the Pima Association of Governments on May 28, 2009.
1996 Carbon Monoxide Limited Maintenance Plan for the Tucson Air Planning Area (as updated August, 1997).	Tucson Air Planning Area.	October 6, 1997	June 8, 2000, 65 FR 36353; corrected March 18, 2004, 69 FR 12802.	Approval includes base year (1994) emissions inventory; contingency plan, including commitments to follow maintenance plan contingency procedures by the Pima Association of Governments and by the member jurisdictions: the town of Oro Valley, Arizona (Resolution No. (R) 96–38, adopted June 5, 1996), the City of South Tucson (Resolution No. 96–16, adopted on June 10, 1996), Pima County (Resolution and Order No. 1996–120, adopted June 18, 1996), the City of Tucson (Resolution No. 17319, adopted June 24, 1996), and the town of Marana, Arizona (Resolution No. 96–55, adopted June 18, 1996).

TABLE 1—EPA-APPROVED NON-REGULATORY AND QUASI-REGULATORY MEASURES—Continued

[Excluding certain resolutions and statutes, which are listed in tables 2 and 3, respectively] [1]

Name of SIP provision	Applicable geographic or nonattainment area or title/subject	State submittal date	EPA approval date	Explanation
Commitment in the July 22, 1988 submittal letter to apply the oxygenated fuels program of the July 18, 1988 submittal to Pima County.	Pima County	July 22, 1988	January 29, 1991, 56 FR 3219.	
1987 Carbon Monoxide State Implementation Plan Revision for the Tucson Air Planning Area.	Tucson Air Planning Area.	January 6, 1988	August 10, 1988, 53 FR 30220; vacated; restored on January 29, 1991, 56 FR 3219.	Adopted on October 21, 1987. Vacated by the U.S. Court of Appeals for the Ninth Circuit in *Delaney* v. *EPA.* Control and committal measures were restored on January 29, 1991, 56 FR 3219.
Improvement Schedules for Transit System and Rideshare Program in Metropolitan Pima County.	Metropolitan Pima County.	March 8, 1982	July 7, 1982, 47 FR 29532.	Adopted on October 21, 1987.
Metropolitan Pima County Nonattainment Area Plan for TSP.	Metropolitan Pima County.	March 27, 1979	July 7, 1982, 47 FR 29532.	
Metropolitan Pima County Nonattainment Area Plan for CO.	Metropolitan Pima County.	March 20, 1979	July 7, 1982, 47 FR 29532.	
Intergovernmental Agreement (IGA) between Pima County, City of Tucson, City of South Tucson, Town of Oro Valley and Town of Marana, April 18, 1988.	Pima County	May 26, 1988	January 29, 1991 ...	Related to motor vehicle trip reduction.

[1] Table 1 is divided into three parts: Clean Air Act Section 110(a)(2) State Implementation Plan Elements (excluding Part D Elements and Plans), Part D Elements and Plans (other than for the Metropolitan Phoenix or Tucson Areas), and Part D Elements and Plans for the Metropolitan Phoenix and Tucson Areas.

† Vacated by the U.S. Court of Appeals for the Ninth Circuit in *Delaney* v. *EPA,* 898 F.2d 687 (9th Cir. 1990). Restored on January 29, 1991, 56 FR 3219.

TABLE 2—EPA-APPROVED RESOLUTIONS ADOPTED BY JURISDICTIONS IN MARICOPA AND PINAL COUNTIES TO IMPLEMENT MEASURES IN PM–10 AND CARBON MONOXIDE STATE IMPLEMENTATION PLANS

Name of SIP provision	Applicable geographic or nonattainment area	State submittal date	EPA approval date	Explanation
Resolution to Implement Measures to Reduce Reentrained Dust Emissions from Targeted Paved Roads in the Revised PM–10 State Implementation Plan for the Salt River Area (including Exhibit A and Arizona Department of Transportation Plan to Reduce Reentrained Dust Emissions from Targeted Paved Roads).	Maricopa County	October 7, 2005	August 21, 2007, 72 FR 46564.	Adopted by the Arizona Department of Transportation on September 17, 2004.
Resolution to Implement Measures in the MAG 1998 Serious Area Particulate Plan for PM–10 for the Maricopa County Area (including Exhibit A, 8 pages).	Maricopa County	February 16, 2000	July 25, 2002, 67 FR 48718.	Adopted by the Arizona Department of Transportation on July 17, 1998.
Resolution to Implement Measures in the MAG 1997 Serious Area Particulate Plan for PM–10 and MAG 1998 Serious Area Carbon Monoxide Plan for the Maricopa County Area (including Exhibit A, 24 pages plus index page).	Maricopa County	February 16, 2000	July 25, 2002, 67 FR 48718.	Adopted by the Arizona Department of Transportation on June 20, 1997.
Resolution No. C–85–05–005–0–00: Resolution to Implement Additional Measures for the Maricopa County, Arizona Serious PM–10 Nonattainment Area (including Exhibit A).	Maricopa County	October 7, 2005	August 21, 2007, 72 FR 46564.	Adopted on January 19, 2005.

TABLE 2—EPA-APPROVED RESOLUTIONS ADOPTED BY JURISDICTIONS IN MARICOPA AND PINAL COUNTIES TO IMPLEMENT MEASURES IN PM–10 AND CARBON MONOXIDE STATE IMPLEMENTATION PLANS—Continued

Name of SIP provision	Applicable geographic or nonattainment area	State submittal date	EPA approval date	Explanation
Resolution to Adopt the Revised MAG 1999 Serious Area Particulate Plan for PM–10 for the Maricopa County Nonattainment Area (including Exhibit A, 2 pages).	Maricopa County	February 16, 2000	July 25, 2002, 67 FR 48718.	Adopted by the Maricopa Association of Governments on February 14, 2000.
Resolution #9701: Resolution to Implement Measures in the MAG 1997 Serious Area Particulate Plan for PM–10 and MAG 1998 Serious Area Carbon Monoxide Plan for the Maricopa County Area (including Exhibit A, 23 pages).	Maricopa County	February 16, 2000	July 25, 2002, 67 FR 48718.	Adopted by the Regional Public Transportation Authority on June 12, 1997.
Resolution to Update Control Measure 6 in the Revised MAG 1999 Serious Area Particulate Plan for PM–10 for the Maricopa County Area (including Exhibit A, 2 pages).	Maricopa County	January 8, 2002	July 25, 2002, 67 FR 48718.	Adopted by Maricopa County on December 19, 2001.
Resolution to Implement Measures in the MAG 1999 Serious Area Particulate Plan for PM–10 for the Maricopa County Area (including Exhibit A, 10 pages).	Maricopa County	February 16, 2000	July 25, 2002, 67 FR 48718.	Adopted by Maricopa County on December 15, 1999.
Resolution to Implement Measures in the MAG 1998 Serious Area Particulate Plan for PM–10 for the Maricopa County Area (including Exhibit A, 10 pages).	Maricopa County	February 16, 2000	July 25, 2002, 67 FR 48718.	Adopted by Maricopa County on February 17, 1999.

TABLE 2—EPA-APPROVED RESOLUTIONS ADOPTED BY JURISDICTIONS IN MARICOPA AND PINAL COUNTIES TO IMPLEMENT MEASURES IN PM–10 AND CARBON MONOXIDE STATE IMPLEMENTATION PLANS—Continued

Name of SIP provision	Applicable geographic or nonattainment area	State submittal date	EPA approval date	Explanation
Resolution to Implement Measures in the MAG 1997 Serious Area Particulate Plan for PM–10 for the Maricopa County Area (including Exhibit A, 9 pages).	Maricopa County	February 16, 2000	July 25, 2002, 67 FR 48718.	Adopted by Maricopa County on November 19, 1997.
Resolution to Implement Measures in the MAG 1997 Serious Area Particulate Plan for PM–10 and MAG 1998 Serious Area Carbon Monoxide Plan for the Maricopa County Area (including Exhibit A, 16 pages).	Maricopa County	February 16, 2000	July 25, 2002, 67 FR 48718.	Adopted by Maricopa County on June 25, 1997. Transcription error ''1A998'' in the original.
Resolution To Improve the Administration of Maricopa County's Fugitive Dust Program and to Foster Interagency Cooperation.	Maricopa County	May 7, 1997	August 4, 1997, 62 FR 41856.	Adopted by Maricopa County on May 14, 1997.
Resolution No. 04–24: A Resolution of the Mayor and City Council of the City of Apache Junction, Arizona, Implementing Measures to Reduce Reentrained Dust Emissions from Targeted Paved Roads in the Revised PM–10 State Implementation Plan for the Salt River Area (including Exhibit A).	City of Apache Junction.	October 7, 2005	August 21, 2007, 72 FR 46564.	Adopted on September 21, 2004.

TABLE 2—EPA-APPROVED RESOLUTIONS ADOPTED BY JURISDICTIONS IN MARICOPA AND PINAL COUNTIES TO IMPLEMENT MEASURES IN PM–10 AND CARBON MONOXIDE STATE IMPLEMENTATION PLANS—Continued

Name of SIP provision	Applicable geographic or nonattainment area	State submittal date	EPA approval date	Explanation
Resolution No. 2448–04: A Resolution of the Council of the City of Avondale, Arizona, Implementing Measures to Reduce Reentrained Dust Emissions from Targeted Paved Roads in the Revised PM–10 State Implementation Plan for the Salt River Area (including Exhibit A).	City of Avondale	October 7, 2005	August 21, 2007, 72 FR 46564.	Adopted on September 20, 2004.
Resolution No. 1949–99; A Resolution of the Council of the City of Avondale, Maricopa County, Arizona, Implementing Measures in the MAG 1998 Serious Area Particulate Plan for PM–10 for the Maricopa County Area (including Exhibit A, 7 pages).	City of Avondale	February 16, 2000	July 25, 2002, 67 FR 48718.	Adopted by the City of Avondale on February 16, 1999.
Resolution No. 1711–97; A Resolution of the City Council of the City of Avondale, Maricopa County, Arizona, To Implement Measures in the MAG 1997 Serious Area Particulate Plan for PM–10 and MAG 1998 Serious Area Carbon Monoxide Plan for the Maricopa County Area (including Exhibit A, 14 pages).	City of Avondale	February 16, 2000	July 25, 2002, 67 FR 48718.	Adopted by the City of Avondale on September 15, 1997.

TABLE 2—EPA-APPROVED RESOLUTIONS ADOPTED BY JURISDICTIONS IN MARICOPA AND PINAL COUNTIES TO IMPLEMENT MEASURES IN PM–10 AND CARBON MONOXIDE STATE IMPLEMENTATION PLANS—Continued

Name of SIP provision	Applicable geographic or nonattainment area	State submittal date	EPA approval date	Explanation
Resolution No. 58–04: A Resolution of the Mayor and Town Council of the Town of Buckeye, Arizona, Implementing Measures to Reduce Reentrained Dust Emission from Targeted Paved Roads in the Revised PM–10 State Implementation Plan for the Salt River Area (including Exhibit A).	Town of Buckeye ...	October 7, 2005	August 21, 2007, 72 FR 46564.	Adopted on November 16, 2004.
Resolution No. 15–97; A Resolution of the Town Council of the Town of Buckeye, Maricopa County, Arizona, To Implement Measures in the MAG 1997 Serious Area Carbon Monoxide Plan for the Maricopa County Area (including Exhibit A, 5 pages).	Town of Buckeye ...	February 16, 2000	July 25, 2002, 67 FR 48718.	Adopted by the Town of Buckeye on October 7, 1997.
Town of Carefree Resolution No. 98–24; A Resolution of the Mayor and Common Council of the Town of Carefree, Arizona, To Implement Measures in the MAG 1998 Serious Area Particulate Plan for PM–10 for the Maricopa County Area (including Exhibit A, 4 pages).	Town of Carefree ...	February 16, 2000	July 25, 2002, 67 FR 48718.	Adopted by the Town of Carefree on September 1, 1998.

TABLE 2—EPA-APPROVED RESOLUTIONS ADOPTED BY JURISDICTIONS IN MARICOPA AND PINAL COUNTIES TO IMPLEMENT MEASURES IN PM–10 AND CARBON MONOXIDE STATE IMPLEMENTATION PLANS—Continued

Name of SIP provision	Applicable geographic or nonattainment area	State submittal date	EPA approval date	Explanation
Town of Carefree Resolution No. 97–16; A Resolution of the Mayor and Common Council of the Town of Carefree, Arizona, To Implement Measures in the MAG 1997 Serious Area Particulate Plan for PM–10 and MAG 1998 Serious Area Carbon Monoxide Plan for the Maricopa County Area (including Exhibit A, 3 pages).	Town of Carefree ...	February 16, 2000	July 25, 2002, 67 FR 48718.	Adopted by the Town of Carefree on September 2, 1997.
Resolution R98–14; A Resolution of the Mayor and Town Council of the Town of Cave Creek, Maricopa County, Arizona, To Implement Measures in the MAG 1998 Serious Area Particulate Plan for PM–10 for the Maricopa County Area (including Exhibit A, 1 page).	Town of Cave Creek.	February 16, 2000	July 25, 2002, 67 FR 48718.	Adopted by the Town of Cave Creek on December 8, 1998.
Resolution R97–28; A Resolution of the Mayor and Town Council of the Town of Cave Creek, Maricopa County, Arizona, Implementing Measures in the MAG 1997 Serious Area Particulate Plan for PM–10 and MAG 1998 Serious Area Carbon Monoxide Plan for the Maricopa County Area (including Exhibit A, 4 pages).	Town of Cave Creek.	February 16, 2000	July 25, 2002, 67 FR 48718.	Adopted by the Town of Cave Creek on September 2, 1997.

TABLE 2—EPA-APPROVED RESOLUTIONS ADOPTED BY JURISDICTIONS IN MARICOPA AND PINAL COUNTIES TO IMPLEMENT MEASURES IN PM–10 AND CARBON MONOXIDE STATE IMPLEMENTATION PLANS—Continued

Name of SIP provision	Applicable geographic or nonattainment area	State submittal date	EPA approval date	Explanation
Resolution No. 3782: Resolution to Implement Measures to Reduce Re-entrained Dust Emissions from Identified Paved Roads in Chandler As Part of the Revised PM–10 State Implementation Plan for Air Quality (including Exhibit A and Exhibit B).	City of Chandler	October 7, 2005	August 21, 2007, 72 FR 46564.	Adopted on October 14, 2004.
Resolution No. 2929; A Resolution of the City Council of the City of Chandler, Arizona, To Implement Measures in the MAG 1998 Serious Area Particulate Plan for PM–10 for the Maricopa County Area (including Exhibit A, 9 pages).	City of Chandler	February 16, 2000	July 25, 2002, 67 FR 48718.	Adopted by the City of Chandler on October 8, 1998.
Resolution No. 2672; A Resolution of the City Council of the City of Chandler, Arizona To Implement Measures in the MAG 1997 Serious Area Particulate Plan for PM–10 and MAG 1998 Serious Area Carbon Monoxide Plan for the Maricopa County Area (including Exhibit A, 16 pages).	City of Chandler	February 16, 2000	July 25, 2002, 67 FR 48718.	Adopted by the City of Chandler on August 14, 1997.

TABLE 2—EPA-APPROVED RESOLUTIONS ADOPTED BY JURISDICTIONS IN MARICOPA AND PINAL COUNTIES TO IMPLEMENT MEASURES IN PM–10 AND CARBON MONOXIDE STATE IMPLEMENTATION PLANS—Continued

Name of SIP provision	Applicable geographic or nonattainment area	State submittal date	EPA approval date	Explanation
A Resolution of the City Council of the City of Chandler, Arizona, Stating the City's Intent to Work Cooperatively with Maricopa County to Control the Generation of Fugitive Dust Pollution.	City of Chandler	May 7, 1997	August 4, 1997, 62 FR 41856.	Adopted by the City of Chandler on March 27, 1997.
Resolution No. R04–10–54: A Resolution of the Mayor and City Council of the City of El Mirage, Maricopa County, Arizona, Implementing Measures to Reduce Re-entrained Dust Emissions from Targeted Paved Roads in the Revised PM–10 State Implementation Plan for the Salt River Area (including Exhibit A).	City of El Mirage	October 7, 2005	August 21, 2007, 72 FR 46564.	Adopted on October 28, 2004.
Resolution No. R98–08–22; A Resolution of the Mayor and Common Council of the City of El Mirage, Arizona, Amending Resolution No. R98–02–04 To Implement Measures in the MAG 1997 Serious Area Particulate Plan for PM–10 for the Maricopa County Area (including Exhibit A, 5 pages).	City of El Mirage	February 16, 2000	July 25, 2002, 67 FR 48718.	Adopted by the City of El Mirage on August 27, 1998.

TABLE 2—EPA-APPROVED RESOLUTIONS ADOPTED BY JURISDICTIONS IN MARICOPA AND PINAL COUNTIES TO IMPLEMENT MEASURES IN PM–10 AND CARBON MONOXIDE STATE IMPLEMENTATION PLANS—Continued

Name of SIP provision	Applicable geographic or nonattainment area	State submittal date	EPA approval date	Explanation
Resolution No. R98–02–04; A Resolution To Implement Measures in the MAG 1997 Serious Area Particulate Plan for PM–10 for the Maricopa County Area (including Exhibit A, 5 pages).	City of El Mirage	February 16, 2000	July 25, 2002, 67 FR 48718.	Adopted by the City of El Mirage on February 12, 1998.
Resolution No. R97–08–20; Resolution To Implement Measures in the MAG 1997 Serious Area Particulate Plan for PM–10 and MAG 1998 Serious Area Carbon Monoxide Plan for the Maricopa County Area (including Exhibit A, 8 pages).	City of El Mirage	February 16, 2000	July 25, 2002, 67 FR 48718.	Adopted by the City of El Mirage on August 28, 1997.
Resolution No. 2004–63: A Resolution of the Mayor and Council of the Town of Fountain Hills, Arizona, Implementing Measures to Reduce Reentrained Dust Emissions from Targeted Paved Roads in the Revised PM–10 State Implementation Plan for the Salt River Area (including Exhibit A and Protocol to Reduce Reentrained Dust Emissions from Targeted Paved Roads).	Town of Fountain Hills.	October 7, 2005	August 21, 2007, 72 FR 46564.	Adopted on November 18, 2004.

TABLE 2—EPA-APPROVED RESOLUTIONS ADOPTED BY JURISDICTIONS IN MARICOPA AND PINAL COUNTIES TO IMPLEMENT MEASURES IN PM–10 AND CARBON MONOXIDE STATE IMPLEMENTATION PLANS—Continued

Name of SIP provision	Applicable geographic or nonattainment area	State submittal date	EPA approval date	Explanation
Resolution No. 1998–49; Resolution To Implement Measures in the MAG 1998 Serious Area Particulate Plan for PM–10 for the Maricopa County Area (including Exhibit A, 7 pages), adopted on October 1, 1998.	Town of Fountain Hills.	February 16, 2000	July 25, 2002, 67 FR 48718.	Adopted by the Town of Fountain Hills on October 1, 1998. Incorporated materials are pages 4 to 10 of the 11-page resolution package; pages 1 and 2 are cover sheets with no substantive content and page 11 is a summary of measures previously adopted by the Town of Fountain Hills.
Resolution No. 1997–49; A Resolution of the Common Council of the Town of Fountain Hills, Arizona, Adopting the MAG 1997 Particulate Plan for PM–10 and MAG 1998 Serious Area Carbon Monoxide Plan for the Maricopa County Area and Committing to Certain Implementation Programs (including Exhibit B, 5 pages and cover).	Town of Fountain Hills.	February 16, 2000	July 25, 2002, 67 FR 48718.	Adopted by the Town of Fountain Hills on October 2, 1997.

TABLE 2—EPA-APPROVED RESOLUTIONS ADOPTED BY JURISDICTIONS IN MARICOPA AND PINAL COUNTIES TO IMPLEMENT MEASURES IN PM–10 AND CARBON MONOXIDE STATE IMPLEMENTATION PLANS—Continued

Name of SIP provision	Applicable geographic or nonattainment area	State submittal date	EPA approval date	Explanation
Resolution No. 2575: A Resolution of the Common Council of the Town of Gilbert, Arizona to Implement Measures to Reduce Reentrained Dust Emissions from Targeted Paved Roads in the Revised PM–10 State Implementation Plan for the Salt River Area (including Exhibit A and Town of Gilbert Protocol for Reducing PM–10 Emissions from ''High Dust'' Paved Roads).	Town of Gilbert	October 7, 2005	August 21, 2007, 72 FR 46564.	Adopted on March 29, 2005.
Resolution No. 1939: A Resolution of the Common Council of the Town of Gilbert, Arizona, Expressing its Commitment to Implement Measures in the Maricopa Association of Governments (MAG) 1998 Serious Area Particulate Plan for PM–10 for the Maricopa County Area (including Attachment A, 5 pages).	Town of Gilbert	February 16, 2000	July 25, 2002, 67 FR 48718.	Adopted by the Town of Gilbert on July 21, 1998. Attachment A is referred to as Exhibit A in the text of the Resolution.
Resolution No. 1864; A Resolution of the Common Council of the Town of Gilbert, Arizona, Implementing Measures in the MAG 1997 Serious Area Particulate Plan for PM–10 for the Maricopa County Area (including Attachment A, 5 pages).	Town of Gilbert	February 16, 2000	July 25, 2002, 67 FR 48718.	Adopted by the Town of Gilbert on November 25, 1997. Attachment A is referred to as Exhibit A in the text of the Resolution.

TABLE 2—EPA-APPROVED RESOLUTIONS ADOPTED BY JURISDICTIONS IN MARICOPA AND PINAL COUNTIES TO IMPLEMENT MEASURES IN PM–10 AND CARBON MONOXIDE STATE IMPLEMENTATION PLANS—Continued

Name of SIP provision	Applicable geographic or nonattainment area	State submittal date	EPA approval date	Explanation
Resolution No. 1817; A Resolution of the Common Council of the Town of Gilbert, Maricopa County, Arizona, Authorizing the Implementation of the MAG 1997 Serious Area Particulate Plan for PM–10 and the MAG Serious Area Carbon Monoxide Plan for the Maricopa County Area (including 15 pages of attached material).	Town of Gilbert	February 16, 2000	July 25, 2002, 67 FR 48718.	Adopted by the Town of Gilbert on June 10, 1997.
A Resolution of the Mayor and the Common Council of the Town of Gilbert, Maricopa County, Arizona, Providing for the Town's Intent to Work Cooperatively with Maricopa County, Arizona, to Control the Generation of Fugitive Dust Pollution.	Town of Gilbert	May 7, 1997	August 4, 1997, 62 FR 41856.	Adopted by the Town of Gilbert on April 15, 1997.

TABLE 2—EPA-APPROVED RESOLUTIONS ADOPTED BY JURISDICTIONS IN MARICOPA AND PINAL COUNTIES TO IMPLEMENT MEASURES IN PM–10 AND CARBON MONOXIDE STATE IMPLEMENTATION PLANS—Continued

Name of SIP provision	Applicable geographic or nonattainment area	State submittal date	EPA approval date	Explanation
Resolution No. 3796 New Series: A Resolution of the Council of the City of Glendale, Maricopa County, Arizona, Implementing Measures to Reduce Reentrained Dust Emissions from Targeted Paved Roads in the Revised PM–10 State Implementation Plan for the Salt River Area (including Exhibit A and Glendale Targeted Street Sweeping Protocol to Reduce Dust Emissions).	City of Glendale	October 7, 2005	August 21, 2007, 72 FR 46564.	Adopted on September 14, 2004.
Resolution No. 3225 New Series; A Resolution of the Council of the City of Glendale, Maricopa County, Arizona, Implementing Measures in the MAG 1998 Serious Area Particulate Plan for PM–10 for the Maricopa County Area (including Exhibit A, 9 pages).	City of Glendale	February 16, 2000	July 25, 2002, 67 FR 48718.	Adopted by the City of Glendale on July 28, 1998.
Resolution No. 3161 New Series; A Resolution of the Council of the City of Glendale, Maricopa County, Arizona, Implementing Measures in the MAG 1997 Serious Area Particulate Plan for PM–10 for the Maricopa County Area (including Exhibit A, 6 pages).	City of Glendale	February 16, 2000	July 25, 2002, 67 FR 48718.	Adopted by the City of Glendale on October 28, 1997.

TABLE 2—EPA-APPROVED RESOLUTIONS ADOPTED BY JURISDICTIONS IN MARICOPA AND PINAL COUNTIES TO IMPLEMENT MEASURES IN PM–10 AND CARBON MONOXIDE STATE IMPLEMENTATION PLANS—Continued

Name of SIP provision	Applicable geographic or nonattainment area	State submittal date	EPA approval date	Explanation
Resolution No. 3123 New Series; A Resolution of the Council of the City of Glendale, Maricopa County, Arizona, Implementing Measures in the MAG 1997 Serious Area Particulate Plan for PM–10 and MAG 1998 Serious Area Carbon Monoxide Plan for the Maricopa County Area (including Exhibit A, 20 pages).	City of Glendale	February 16, 2000	July 25, 2002, 67 FR 48718.	Adopted by the City of Glendale on June 10, 1997.
A Resolution of the Council of the City of Chandler, Maricopa County, Arizona, Stating Its Intent to Work Cooperatively with Maricopa County to Control the Generation of Fugitive Dust Pollution.	City of Glendale	May 7, 1997	August 4, 1997, 62 FR 41856.	Adopted by the City of Glendale on March 25, 1997.
Resolution No. 04–941: A Resolution of the Mayor and Council of the City of Goodyear, Maricopa County, Arizona, to Authorize the City Manager to Implement Measures to Reduce Re-entrained Dust Emissions from Targeted Paved Roads in the Revised PM–10 State Implementation Plan for the Salt River Area (including Exhibit A and Protocol for Reducing Re-entrained Dust Emissions from Targeted Paved Roads).	City of Goodyear	October 7, 2005	August 21, 2007, 72 FR 46564.	Adopted on October 25, 2004.

TABLE 2—EPA-APPROVED RESOLUTIONS ADOPTED BY JURISDICTIONS IN MARICOPA AND PINAL COUNTIES TO IMPLEMENT MEASURES IN PM–10 AND CARBON MONOXIDE STATE IMPLEMENTATION PLANS—Continued

Name of SIP provision	Applicable geographic or nonattainment area	State submittal date	EPA approval date	Explanation
Resolution No. 98–645; A Resolution of the Council of the City of Goodyear, Maricopa County, Arizona, Implementing Measures in the MAG 1998 Serious Area Particulate Plan for PM–10 for the Maricopa County Area (including Attachment III, 7 pages).	City of Goodyear	February 16, 2000	July 25, 2002, 67 FR 48718.	Adopted by the City of Goodyear on July 27, 1998.
Resolution No. 97–604 Carbon Monoxide Plan; A Resolution of the Council of the City of Goodyear, Maricopa County, Arizona, Implementing Measures in the MAG 1997 Serious Area Particulate Plan for PM–10 and MAG 1998 Serious Area Carbon Monoxide Plan for the Maricopa County Area (including Exhibit A, 21 pages).	City of Goodyear	February 16, 2000	July 25, 2002, 67 FR 48718.	Adopted by the City of Goodyear on September 9, 1997. Adoption year not given on the resolution but is understood to be 1997 based on resolution number.
Resolution No. 8344: A Resolution of the City Council of the City of Mesa, Maricopa County, Arizona, Stating the City's Intent to Implement Measures to Reduce Particulate Pollution (including Exhibit A).	City of Mesa	October 7, 2005	August 21, 2007, 72 FR 46564.	Adopted on October 4, 2004.

TABLE 2—EPA-APPROVED RESOLUTIONS ADOPTED BY JURISDICTIONS IN MARICOPA AND PINAL COUNTIES TO IMPLEMENT MEASURES IN PM–10 AND CARBON MONOXIDE STATE IMPLEMENTATION PLANS—Continued

Name of SIP provision	Applicable geographic or nonattainment area	State submittal date	EPA approval date	Explanation
Resolution No. 7360; A Resolution of the City Council of the City of Mesa, Maricopa County, Arizona, to Implement Measures in the MAG Serious Area Particulate Plan for PM–10 for the Maricopa County Area (including Exhibit A, 8 pages).	City of Mesa	February 16, 2000	July 25, 2002, 67 FR 48718.	Adopted by the City of Mesa on May 3, 1999.
Resolution No. 7123; A Resolution of the City Council of the City of Mesa, Maricopa County, Arizona, to Implement Measures in the MAG 1997 Serious Area Particulate Plan for PM–10 for the Maricopa County Area (including Exhibit A, 10 pages).	City of Mesa	February 16, 2000	July 25, 2002, 67 FR 48718.	Adopted by the City of Mesa on December 1, 1997.
Resolution No. 7061; A Resolution of the City Council of the City of Mesa, Maricopa County, Arizona, to Implement Measures in the MAG 1997 Serious Area Particulate Plan for PM–10 and MAG 1998 Serious Area Carbon Monoxide Plan for the Maricopa County Area (including Exhibit A, 13 pages plus index page).	City of Mesa	February 16, 2000	July 25, 2002, 67 FR 48718.	Adopted by the City of Mesa on June 23, 1997.

TABLE 2—EPA-APPROVED RESOLUTIONS ADOPTED BY JURISDICTIONS IN MARICOPA AND PINAL COUNTIES TO IMPLEMENT MEASURES IN PM–10 AND CARBON MONOXIDE STATE IMPLEMENTATION PLANS—Continued

Name of SIP provision	Applicable geographic or nonattainment area	State submittal date	EPA approval date	Explanation
A Resolution of the Mesa City Council Stating the City's Intent to Work Cooperatively with Maricopa County to Control the Generation of Particulate Air Pollution and Directing City Staff to Develop a Particulate Pollution Control Ordinance Supported by Adequate Staffing Levels to Address Air Quality.	City of Mesa	May 7, 1997	August 4, 1997, 62 FR 41856.	Adopted by the City of Mesa on April 23, 1997.
Resolution Number 1084: Resolution to Implement Measures to Reduce Reentrained Dust Emissions from Targeted Paved Roads in the Revised PM–10 State Implementation Plan for the Salt River Area (including Exhibit A).	Town of Paradise Valley.	October 7, 2005	August 21, 2007, 72 FR 46564.	Adopted on September 23, 2004.
Resolution Number 945; A Resolution of the Mayor and Town Council of the Town of Paradise Valley, Arizona, to Implement Measures in the MAG 1998 Serious Area Particulate Plan for PM–10 for the Maricopa County Area (including Exhibit A, 5 pages).	Town of Paradise Valley.	February 16, 2000	July 25, 2002, 67 FR 48718.	Adopted by the Town of Paradise Valley on July 23, 1998.

TABLE 2—EPA-APPROVED RESOLUTIONS ADOPTED BY JURISDICTIONS IN MARICOPA AND PINAL COUNTIES TO IMPLEMENT MEASURES IN PM–10 AND CARBON MONOXIDE STATE IMPLEMENTATION PLANS—Continued

Name of SIP provision	Applicable geographic or nonattainment area	State submittal date	EPA approval date	Explanation
Resolution Number 913; A Resolution of the Town of Paradise Valley, to Implement Measures in the MAG 1997 Serious Area Particulate Plan for PM–10 and MAG 1998 Serious Area Carbon Monoxide Plan for the Maricopa County Area (including Exhibit A, 9 pages).	Town of Paradise Valley.	February 16, 2000	July 25, 2002, 67 FR 48718.	Adopted by the Town of Paradise Valley on October 9, 1997.
Resolution No. 04–235: A Resolution of the Mayor and City Council of the City of Peoria, Maricopa County, Arizona, Implementing Measures to Reduce Reentrained Dust Emissions from Targeted Paved Roads in the Revised PM–10 State Implementation Plan for the Salt River Area (including Exhibit A and City of Peoria Targeted Paved Roadways Dust Control Protocol, September 24, 2004).	City of Peoria	October 7, 2005	August 21, 2007, 72 FR 46564.	Adopted on October 5, 2004.
Resolution No. 98–107; A Resolution of the Mayor and Council of the City of Peoria, Arizona, to Approve and Authorize the Acceptance to Implement Measures in the MAG 1998 Serious Area Particulate Plan for PM–10 for the Maricopa County Area (including Exhibit A, 7 pages).	City of Peoria	February 16, 2000	July 25, 2002, 67 FR 48718.	Adopted by the City of Peoria on July 21, 1998.

TABLE 2—EPA-APPROVED RESOLUTIONS ADOPTED BY JURISDICTIONS IN MARICOPA AND PINAL COUNTIES TO IMPLEMENT MEASURES IN PM–10 AND CARBON MONOXIDE STATE IMPLEMENTATION PLANS—Continued

Name of SIP provision	Applicable geographic or nonattainment area	State submittal date	EPA approval date	Explanation
Resolution No. 97–113; A Resolution of the Mayor and Council of the City of Peoria, Arizona, to Implement Measures in the MAG 1997 Serious Area Particulate Plan for PM–10 for the Maricopa County Area and Directing the Recording of This Resolution with the Maricopa County Recorder and Declaring an Emergency (including Exhibit A, 8 pages plus index page).	City of Peoria	February 16, 2000	July 25, 2002, 67 FR 48718.	Adopted by the City of Peoria on October 21, 1997.
Resolution No. 97–37; A Resolution of the Mayor and Council of the City of Peoria, Arizona, to Implement Measures in the MAG 1997 Serious Area Particulate Plan for PM–10 and MAG 1998 Serious Area Carbon Monoxide Plan for the Maricopa County Area (including Exhibits A, 5 pages, and B, 19 pages).	City of Peoria	February 16, 2000	July 25, 2002, 67 FR 48718.	Adopted by the City of Peoria on June 17, 1997.
Resolution No. 20114: A Resolution Stating the City's Intent to Implement Measures to Reduce Air Pollution (including Exhibit A, City of Phoenix 2004 Protocol and Implementation Plan for Paved Streets with Potential for Dust Emissions, and Attachment A).	City of Phoenix	October 7, 2005	August 21, 2007, 72 FR 46564.	Adopted on June 16, 2004.

TABLE 2—EPA-APPROVED RESOLUTIONS ADOPTED BY JURISDICTIONS IN MARICOPA AND PINAL COUNTIES TO IMPLEMENT MEASURES IN PM–10 AND CARBON MONOXIDE STATE IMPLEMENTATION PLANS—Continued

Name of SIP provision	Applicable geographic or nonattainment area	State submittal date	EPA approval date	Explanation
Resolution No. 19141; A Resolution Stating the City's Intent to Implement Measures to Reduce Particulate Air Pollution (including Exhibit A, 10 pages).	City of Phoenix	February 16, 2000	July 25, 2002, 67 FR 48718.	Adopted by the City of Phoenix on September 9, 1998.
Resolution No. 19006; A Resolution Stating the City's Intent to Implement Measures to Reduce Air Pollution (including Exhibit A, 13 pages).	City of Phoenix	February 16, 2000	July 25, 2002, 67 FR 48718.	Adopted by the City of Phoenix on November 19, 1997.
Resolution No. 18949; A Resolution Stating the City's Intent to Implement Measures to Reduce Air Pollution (including Exhibit A, 19 pages).	City of Phoenix	February 16, 2000	July 25, 2002, 67 FR 48718.	Adopted by the City of Phoenix on July 2, 1997.
Resolution 1889A Resolution of the Phoenix City Council Stating the City's Intent to Work Cooperatively with Maricopa County to Control the Generation of Fugitive Dust Pollution.	City of Phoenix	May 7, 1997	August 4, 1997, 62 FR 41856.	Adopted by the City of Phoenix on April 9, 1997.
Resolution 175–98; A Resolution of the Town Council of the Town of Queen Creek, Maricopa County, Arizona to Implement Measures in the MAG 1998 Serious Area Particulate Plan for the Maricopa County Area (including Exhibit A, 9 pages).	Town of Queen Creek.	February 16, 2000	July 25, 2002, 67 FR 48718.	Adopted by the Town of Queen Creek on September 16, 1998.

TABLE 2—EPA-APPROVED RESOLUTIONS ADOPTED BY JURISDICTIONS IN MARICOPA AND PINAL COUNTIES TO IMPLEMENT MEASURES IN PM–10 AND CARBON MONOXIDE STATE IMPLEMENTATION PLANS—Continued

Name of SIP provision	Applicable geographic or nonattainment area	State submittal date	EPA approval date	Explanation
Resolution 145–97; A Resolution of the Town Council of the Town of Queen Creek, Maricopa County, Arizona to Implement Measures in the MAG 1997 Serious Area Particulate Plan for PM–10 for the Maricopa County Area (including Exhibit A, 1 page).	Town of Queen Creek.	February 16, 2000	July 25, 2002, 67 FR 48718.	Adopted by the Town of Queen Creek on November 5, 1997.
Resolution 129–97; A Resolution of the Town Council of the Town of Queen Creek, Maricopa County, Arizona to Implement Measures in the MAG 1997 Serious Area Particulate Plan for PM–10 and MAG 1998 Serious Area Carbon Monoxide Plan for the Maricopa County Area (including Exhibit A, 3 pages).	Town of Queen Creek.	February 16, 2000	July 25, 2002, 67 FR 48718.	Adopted by the Town of Queen Creek on June 4, 1997.

TABLE 2—EPA-APPROVED RESOLUTIONS ADOPTED BY JURISDICTIONS IN MARICOPA AND PINAL COUNTIES TO IMPLEMENT MEASURES IN PM–10 AND CARBON MONOXIDE STATE IMPLEMENTATION PLANS—Continued

Name of SIP provision	Applicable geographic or nonattainment area	State submittal date	EPA approval date	Explanation
Resolution No. 6588: A Resolution of the Council of the City of Scottsdale, Maricopa County Arizona, Authorizing Implementation of Measures to Reduce Reentrained Dust Emissions from Targeted Paved Roads in the Revised PM–10 State Implementation Plan for the Salt River Area (including Exhibit A and Attachment #1—Protocol to Reduce Reentrained Dust Emissions from Targeted Paved Roads).	City of Scottsdale ...	October 7, 2005	August 21, 2007, 72 FR 46564.	Adopted on December 6, 2004.
Resolution No. 5100; A Resolution of the City of Scottsdale, Maricopa County, Arizona, To Strengthen Particulate Dust Control and Air Pollution Measures in the Maricopa County Area (including Exhibit A, 10 pages).	City of Scottsdale ...	February 16, 2000	July 25, 2002, 67 FR 48718.	Adopted by the City of Scottsdale on December 1, 1998.
Resolution No. 4942; Resolution of the Scottsdale City Council To Implement Measures in the MAG 1997 Serious Area Particulate Plan for PM–10 for the Maricopa County Area (including Exhibit A, 13 pages).	City of Scottsdale ...	February 16, 2000	July 25, 2002, 67 FR 48718.	Adopted by the City of Scottsdale on December 1, 1997.

TABLE 2—EPA-APPROVED RESOLUTIONS ADOPTED BY JURISDICTIONS IN MARICOPA AND PINAL COUNTIES TO IMPLEMENT MEASURES IN PM–10 AND CARBON MONOXIDE STATE IMPLEMENTATION PLANS—Continued

Name of SIP provision	Applicable geographic or nonattainment area	State submittal date	EPA approval date	Explanation
Resolution No. 4864; A Resolution of the City of Scottsdale, Maricopa County, Arizona, To Implement Measures in the MAG 1997 Serious Area Particulate Plan for PM–10 and MAG 1998 Serious Area Carbon Monoxide Plan for the Maricopa County Area: Stating the Council's Intent to Implement Certain Control Measures Contained in that Plan (including Exhibit A, 21 pages).	City of Scottsdale ...	February 16, 2000	July 25, 2002, 67 FR 48718.	Adopted by the City of Scottsdale on August 4, 1997.
A Resolution of the Scottsdale City Council Stating the City's Intent to Work Cooperatively with Maricopa County to Control the Generation of Fugitive Dust Pollution.	City of Scottsdale ...	May 7, 1997	August 4, 1997, 62 FR 41856.	Adopted by the City of Scottsdale on March 31, 1997.
Resolution No. 04–163: A Resolution of the Mayor and Council of the City of Surprise, Arizona, to Implement Measures to Reduce Re-entrained Dust Emissions from Targeted Paved Roads in the Revised PM–10 State Implementation Plan for the Salt River Area (including Exhibit A and Protocol).	City of Surprise	October 7, 2005	August 21, 2007, 72 FR 46564.	Adopted on September 23, 2004.

TABLE 2—EPA-APPROVED RESOLUTIONS ADOPTED BY JURISDICTIONS IN MARICOPA AND PINAL COUNTIES TO IMPLEMENT MEASURES IN PM–10 AND CARBON MONOXIDE STATE IMPLEMENTATION PLANS—Continued

Name of SIP provision	Applicable geographic or nonattainment area	State submittal date	EPA approval date	Explanation
Resolution No. 98–51; A Resolution to Implement Measures in the MAG 1997 Serious Area Particulate Plan for PM–10 for the Maricopa County Area (including Exhibit A, 6 pages).	City of Surprise	February 16, 2000	July 25, 2002, 67 FR 48718.	Adopted by the City of Surprise on September 10, 1998.
Resolution No. 97–67; A Resolution to Implement Measures in the MAG 1997 Serious Area Particulate Plan for PM–10 for the Maricopa County Area (including Exhibit A, 3 pages).	City of Surprise	February 16, 2000	July 25, 2002, 67 FR 48718.	Adopted by the City of Surprise on October 23, 1997.
Resolution No. 97–29; A Resolution to Implement Measures in the MAG 1997 Serious Area Particulate Plan for PM–10 and MAG 1998 Serious Area Carbon Monoxide Plan for the Maricopa County Area (including Exhibit A, 4 pages).	City of Surprise	February 16, 2000	July 25, 2002, 67 FR 48718.	Adopted by the City of Surprise on June 12, 1997.

TABLE 2—EPA-APPROVED RESOLUTIONS ADOPTED BY JURISDICTIONS IN MARICOPA AND PINAL COUNTIES TO IMPLEMENT MEASURES IN PM–10 AND CARBON MONOXIDE STATE IMPLEMENTATION PLANS—Continued

Name of SIP provision	Applicable geographic or nonattainment area	State submittal date	EPA approval date	Explanation
Resolution No. 2004.84: A Resolution of the Mayor and City Council of the City of Tempe, Arizona, to Implement Measures to Reduce Re-entrained Dust Emissions from Targeted Paved Roads in the Revised PM–10 State Implementation Plan for the Salt River Area (including Exhibit A and Protocol for Reducing Re-entrained Dust Emissions from Targeted Paved Roads, September 30, 2004).	City of Tempe	October 7, 2005	August 21, 2007, 72 FR 46564.	Adopted on September 30, 2004.
Resolution No. 98.42, Resolution of the Council of the City of Tempe Implementing Measures in the MAG 1998 Serious Area Particulate Plan for PM–10 for the Maricopa County Area (including Exhibit A, 8 pages).	City of Tempe	February 16, 2000	July 25, 2002, 67 FR 48718.	Adopted by the City of Tempe on September 10, 1998.
Resolution No. 97.71, Resolution of the Council of the City of Tempe Stating Its Intent to Implement Measures in the MAG 1997 Serious Area Particulate Plan for PM–10 for the Maricopa County Area (including Exhibit A, 6 pages).	City of Tempe	February 16, 2000	July 25, 2002, 67 FR 48718.	Adopted by the City of Tempe on November 13, 1997.

TABLE 2—EPA-APPROVED RESOLUTIONS ADOPTED BY JURISDICTIONS IN MARICOPA AND PINAL COUNTIES TO IMPLEMENT MEASURES IN PM–10 AND CARBON MONOXIDE STATE IMPLEMENTATION PLANS—Continued

Name of SIP provision	Applicable geographic or nonattainment area	State submittal date	EPA approval date	Explanation
Resolution No. 97.39; Resolution to Implement Measures in the MAG 1997 Serious Area Particulate Plan for PM–10 and MAG 1998 Serious Area Carbon Monoxide Plan for the Maricopa County Area (including Exhibit A, 18 pages).	City of Tempe	February 16, 2000	July 25, 2002, 67 FR 48718.	Adopted by the City of Tempe on June 12, 1997.
A Resolution of the Council of the City of Tempe, Arizona, Stating Its Intent to Work Cooperatively with Maricopa County to Control the Generation of Fugitive Dust Pollution.	City of Tempe	May 7, 1997	August 4, 1997, 62 FR 41856.	Adopted by the City of Tempe on March 27, 1997.
Resolution No. 947: A Resolution of the Mayor and City Council of the City of Tolleson, Maricopa County, Arizona, Implementing Measures to Reduce Reentrained Dust Emissions from Targeted Paved Roads in the Revised PM–10 State Implementation Plan for the Salt River Area (including Exhibit A), adopted on September 28, 2004.	City of Tolleson	October 7, 2005	August 21, 2007, 72 FR 46564.	Adopted on September 28, 2004.

TABLE 2—EPA-APPROVED RESOLUTIONS ADOPTED BY JURISDICTIONS IN MARICOPA AND PINAL COUNTIES TO IMPLEMENT MEASURES IN PM–10 AND CARBON MONOXIDE STATE IMPLEMENTATION PLANS—Continued

Name of SIP provision	Applicable geographic or nonattainment area	State submittal date	EPA approval date	Explanation
Resolution No. 808, A Resolution of the Mayor and City Council of the City of Tolleson, Maricopa County, Arizona, Implementing Measures in the Maricopa Association of Governments (MAG) 1998 Serious Area Particulate Plan for PM–10 for the Maricopa County Area (including Exhibit A).	City of Tolleson	February 16, 2000	July 25, 2002, 67 FR 48718.	Adopted by the City of Tolleson on July 28, 1998.
Resolution No. 788, A Resolution of the Mayor and City Council of the City of Tolleson, Maricopa County, Arizona, Implementing Measures in the Maricopa Association of Governments (MAG) 1997 Serious Area Particulate Plan for PM–10 and MAG 1998 Serious Area Carbon Monoxide Plan for the Maricopa County Area (including Exhibit A, 12 pages).	City of Tolleson	February 16, 2000	July 25, 2002, 67 FR 48718.	Adopted by the City of Tolleson on June 10, 1997.
Resolution No. 1308, Resolution To Implement Measures in the MAG 1997 Serious Area Particulate Plan for PM–10 and MAG 1998 Serious Area Carbon Monoxide Plan for the Maricopa County Area (including Exhibit A, 4 pages).	Town of Wickenburg.	February 16, 2000	July 25, 2002, 67 FR 48718.	Adopted by the Town of Wickenburg on August 18, 1997.

TABLE 2—EPA-APPROVED RESOLUTIONS ADOPTED BY JURISDICTIONS IN MARICOPA AND PINAL COUNTIES TO IMPLEMENT MEASURES IN PM–10 AND CARBON MONOXIDE STATE IMPLEMENTATION PLANS—Continued

Name of SIP provision	Applicable geographic or nonattainment area	State submittal date	EPA approval date	Explanation
Resolution No. 05–01: Resolution to Implement Measures to Reduce Reentrained Dust Emissions from Targeted Paved Roads in the Revised PM–10 State Implementation Plan for the Salt River Area (including Exhibit A).	Town of Youngtown	October 7, 2005	August 21, 2007, 72 FR 46564.	Adopted on January 20, 2005.
Resolution No. 98–15: Resolution To Implement Measures in the MAG 1998 Serious Area Particulate Plan for PM–10 for the Maricopa County Area (including Exhibit A, 8 pages).	Town of Youngtown	February 16, 2000	July 25, 2002, 67 FR 48718.	Adopted by the Town of Youngtown on August 20, 1998.
Resolution No 98–05: Resolution Stating Intent to Work Cooperatively with Maricopa County to Control the Generation of Fugitive Dust Pollution (including Exhibit A, 2 pages).	Town of Youngtown	February 16, 2000	July 25, 2002, 67 FR 48718.	Adopted by the Town of Youngtown on February 19, 1998.
Resolution No. 97–15, Resolution To Implement Measures in the MAG 1997 Serious Particulate Plan for PM–10 and MAG 1998 Serious Area Carbon Monoxide Plan for the Maricopa County Area (including Exhibit A, 4 pages).	Town of Youngtown	February 16, 2000	July 25, 2002, 67 FR 48718.	Adopted by the Town of Youngtown on September 18, 1997.

TABLE 3—EPA-APPROVED ARIZONA STATUTES—NON-REGULATORY

State citation	Title/subject	State submittal date	EPA approval date	Explanation
ARIZONA REVISED STATUTES Title 15 (Education) Chapter 12 (Community Colleges) Article 3 (Community College District Boards)				
15–1444	Powers and duties	March 23, 1988	August 10, 1988, 53 FR 30220; vacated; restored on January 29, 1991, 56 FR 3219.	Subsection C only. Senate Bill 1360, section 6.†
Chapter 13 (Universities and Related Institutions) Article 2 (Arizona Board of Regents)				
15–1627	Control of vehicles and nonpedestrian devices on property of institutions under jurisdiction of board; sanctions; compliance with emissions inspection; definition.	July 18, 1988	August 10, 1988, 53 FR 30224; vacated; restored on January 29, 1991, 56 FR 3219.	House Bill 2206, section 2.†
Title 28 (Transportation) Chapter 2 (Administration) Article 6 (Unblended Gasoline Shortages) [1]				
28–2701	Definitions	July 18, 1988	August 10, 1988, 53 FR 30224; vacated; restored on January 29, 1991, 56 FR 3219.	House Bill 2206, section 6.† Delayed effective date per section 29 of HB 2206.
28–2702	Department Survey of Availability of Unblended Gasoline.	July 18, 1988	August 10, 1988, 53 FR 30224; vacated; restored on January 29, 1991, 56 FR 3219.	House Bill 2206, section 6.† Delayed effective date per section 29 of HB 2206.
28–2703	Determination of Shortage: Declaration.	July 18, 1988	August 10, 1988, 53 FR 30224; vacated; restored on January 29, 1991, 56 FR 3219.	House Bill 2206, section 6.† Delayed effective date per section 29 of HB 2206.
28–2704	State Set-aside Volume.	July 18, 1988	August 10, 1988, 53 FR 30224; vacated; restored on January 29, 1991, 56 FR 3219.	House Bill 2206, section 6.† Delayed effective date per section 29 of HB 2206.
28–2705	Assignment of Set-aside.	July 18, 1988	August 10, 1988, 53 FR 30224; vacated; restored on January 29, 1991, 56 FR 3219.	House Bill 2206, section 6.† Delayed effective date per section 29 of HB 2206.

TABLE 3—EPA-APPROVED ARIZONA STATUTES—NON-REGULATORY—Continued

State citation	Title/subject	State submittal date	EPA approval date	Explanation
28–2706	Price	July 18, 1988	January 29, 1991, 56 FR 3219.	House Bill 2206, section 6. Delayed effective date per section 29 of HB 2206.
28–2707	Application	July 18, 1988	January 29, 1991, 56 FR 3219.	House Bill 2206, section 6. Delayed effective date per section 29 of HB 2206.
28–2708	Appeals	July 18, 1988	January 29, 1991, 56 FR 3219.	House Bill 2206, section 6. Delayed effective date per section 29 of HB 2206.
Chapter 7 (Certification of Title and Registration) Article 5 (Registration Requirements Generally)				
28–2153	Registration requirement; exceptions; assessment; violation; classification.	August 24, 2012	November 5, 2012, 77 FR 66398.	Arizona Revised Statutes (West's, 2011–2012 Compact Edition). Adopted by the Arizona Department of Environmental Quality on August 24, 2012.
Title 35 (Public Finances) Chapter 2 (Handling of Public Funds) Article 2 (State Management of Public Monies)				
35–313	Investment of trust and treasury monies; loan of securities.	August 24, 2012	November 5, 2012, 77 FR 66398.	Arizona Revised Statutes (West's, 2011–2012 Compact Edition). Adopted by the Arizona Department of Environmental Quality on August 24, 2012.
Title 36 (Public Health and Safety) Chapter 6 Article 8 (Air Pollution)				
36–772	Department of Health Services; Studies.	July 13, 1981	June 18, 1982, 47 FR 26382.	
36–775	Powers and Duties	July 13, 1981	June 18, 1982, 47 FR 26382.	
36–779.01	Permits; Exceptions; Applications; Fees.	July 13, 1981	June 18, 1982, 47 FR 26382.	
36–779.02	Grant or Denial of Applications.	July 13, 1981	June 18, 1982, 47 FR 26382.	
36–779.04	Permit Nontransferable.	July 13, 1981	June 18, 1982, 47 FR 26382.	
36–779.05	Expiration of Permit	July 13, 1981	June 18, 1982, 47 FR 26382.	
36–779.06	Posting of Permit	July 13, 1981	June 18, 1982, 47 FR 26382.	

TABLE 3—EPA-APPROVED ARIZONA STATUTES—NON-REGULATORY—Continued

State citation	Title/subject	State submittal date	EPA approval date	Explanation
36–779.07	Notice by Building Permit Agencies.	July 13, 1981	June 18, 1982, 47 FR 26382.	
36–780	Classification and Reporting: Production of Records; Confidentiality of Records; Violation; Penalty.	July 13, 1981	June 18, 1982, 47 FR 26382.	
36–789	Unlawful Open Burning; Exceptions; Violation; Penalty.	July 13, 1981	June 18, 1982, 47 FR 26382.	
36–789.02	Defenses	July 13, 1981	June 18, 1982, 47 FR 26382.	
36–790	Limitations	July 13, 1981	June 18, 1982, 47 FR 26382.	
36–791	Preservation of Rights.	July 13, 1981	June 18, 1982, 47 FR 26382.	
Chapter 14 (Air Pollution)				
Article 1 (State Air Pollution Control)				
36–1704	Hearing Board	July 13, 1981	June 18, 1982, 47 FR 26382.	
36–1707.02	Grant or Denial of Application.	July 13, 1981	June 18, 1982, 47 FR 26382.	
36–1707.03	Appeals to Hearing Board.	July 13, 1981	June 18, 1982, 47 FR 26382.	
36–1707.04	Permit Nontransferable; Exception.	July 13, 1981	June 18, 1982, 47 FR 26382.	
36–1707.05	Posting of Permit	July 13, 1981	June 18, 1982, 47 FR 26382.	
36–1707.06	Notice by Building Permit Agencies.	July 13, 1981	June 18, 1982, 47 FR 26382.	
36–1708	Classification and Reporting; Production of Records: Confidentiality of Records; Violation; Penalty.	July 13, 1981	June 18, 1982, 47 FR 26382.	
36–1717	Motor Vehicle and Combustion Engine Emissions; Standards.	August 5, 1981	June 18, 1982, 47 FR 26382.	
36–1718	Limitations	August 5, 1981	June 18, 1982, 47 FR 26382.	
36–1718.01	Preservation of Rights.	August 5, 1981	June 18, 1982, 47 FR 26382.	
36–1720	Violation; Classification; Agreement Provisions.	August 5, 1981	June 18, 1982, 47 FR 26382.	
36–1720.01	Defenses	July 13, 1981	June 18, 1982, 47 FR 26382.	

TABLE 3—EPA-APPROVED ARIZONA STATUTES—NON-REGULATORY—Continued

State citation	Title/subject	State submittal date	EPA approval date	Explanation
Title 38 (Public Officers and Employees) Chapter 1 (General Provisions) Article 1 (Definitions)				
38–101	Definitions	August 24, 2012	November 5, 2012, 77 FR 66398.	Arizona Revised Statutes (West's, 2011–2012 Compact Edition). Adopted by the Arizona Department of Environmental Quality on August 24, 2012.
Article 8 (Conflict of Interest of Officers and Employees)				
38–501	Application of article	August 24, 2012	November 5, 2012, 77 FR 66398.	Arizona Revised Statutes (West's, 2011–2012 Compact Edition). Adopted by the Arizona Department of Environmental Quality on August 24, 2012.
38–502	Definitions	August 24, 2012	November 5, 2012, 77 FR 66398.	Arizona Revised Statutes (West's, 2011–2012 Compact Edition). Adopted by the Arizona Department of Environmental Quality on August 24, 2012.
38–503	Conflict of interest; exemptions; employment prohibition.	August 24, 2012	November 5, 2012, 77 FR 66398.	Arizona Revised Statutes (West's, 2011–2012 Compact Edition). Adopted by the Arizona Department of Environmental Quality on August 24, 2012.
38–504	Prohibited acts	August 24, 2012	November 5, 2012, 77 FR 66398.	Arizona Revised Statutes (West's, 2011–2012 Compact Edition). Adopted by the Arizona Department of Environmental Quality on August 24, 2012.
38–505	Additional income prohibited for services.	August 24, 2012	November 5, 2012, 77 FR 66398.	Arizona Revised Statutes (West's, 2011–2012 Compact Edition). Adopted by the Arizona Department of Environmental Quality on August 24, 2012.

TABLE 3—EPA-APPROVED ARIZONA STATUTES—NON-REGULATORY—Continued

State citation	Title/subject	State submittal date	EPA approval date	Explanation
38–506	Remedies	August 24, 2012	November 5, 2012, 77 FR 66398.	Arizona Revised Statutes (West's, 2011–2012 Compact Edition). Adopted by the Arizona Department of Environmental Quality on August 24, 2012.
38–507	Opinions of the attorney general, county attorneys, city or town attorneys and house and senate ethics committee.	August 24, 2012	November 5, 2012, 77 FR 66398.	Arizona Revised Statutes (West's, 2011–2012 Compact Edition). Adopted by the Arizona Department of Environmental Quality on August 24, 2012.
38–508	Authority of public officers and employees to act.	August 24, 2012	November 5, 2012, 77 FR 66398.	Arizona Revised Statutes (West's, 2011–2012 Compact Edition). Adopted by the Arizona Department of Environmental Quality on August 24, 2012.
38–509	Filing of disclosures	August 24, 2012	November 5, 2012, 77 FR 66398.	Arizona Revised Statutes (West's, 2011–2012 Compact Edition). Adopted by the Arizona Department of Environmental Quality on August 24, 2012.
38–510	Penalties	August 24, 2012	November 5, 2012, 77 FR 66398.	Arizona Revised Statutes (West's, 2011–2012 Compact Edition). Adopted by the Arizona Department of Environmental Quality on August 24, 2012.
38–511	Cancellation of political subdivision and state contracts; definition.	August 24, 2012	November 5, 2012, 77 FR 66398.	Arizona Revised Statutes (West's, 2011–2012 Compact Edition). Adopted by the Arizona Department of Environmental Quality on August 24, 2012.

TABLE 3—EPA-APPROVED ARIZONA STATUTES—NON-REGULATORY—Continued

State citation	Title/subject	State submittal date	EPA approval date	Explanation
Title 41 (State Government) Chapter 1 (Executive Officers) Article 1 (The Governor)				
41–101.03	State Employee Ride Sharing Program; Designated State Agency; Fund.	July 18, 1988	August 10, 1988, 53 FR 30224; vacated; restored on January 29, 1991, 56 FR 3219.	House Bill 2206, section 7.
Chapter 4 (Department of Administration and Personnel Board) Article 7 (Management of State Properties)				
41–796.01	Adjusted work hours.	September 1, 1999	June 8, 2000, 65 FR 36353.	House Bill 2189, section 3.
Chapter 15 (Department of Weights and Measures) Article 2 (State Administration of Weights and Measures)				
41–2065	Powers and Duties	June 11, 1991	March 9, 1992, 57 FR 8268.	House Bill 2181, section 1.
41–2066	Enforcement powers of the director and inspectors.	July 18, 1988	August 10, 1988, 53 FR 30224; vacated; restored on January 29, 1991, 56 FR 3219.	House Bill 2206, section 10.≤†
41–2066(A)(2)	Enforcement powers of the director and inspectors.	January 22, 2004	March 4, 2004, 69 FR 10161.	Included in submittal entitled "Supplement to Cleaner Burning Gasoline Program State Implementation Plan Revision."
Title 49 (The Environment) Chapter 1 (General Provisions) Article 1 (Department of Environmental Quality)				
49–103	Department employees; legal counsel.	August 24, 2012	November 5, 2012, 77 FR 66398.	Arizona Revised Statutes (West's, 2011–2012 Compact Edition). Adopted by the Arizona Department of Environmental Quality on August 24, 2012.
49–104, subsections (A)(2), (A)(4), (B)(3), and (B)(5) only.	Powers and duties of the department and director.	August 24, 2012	November 5, 2012, 77 FR 66398.	Arizona Revised Statutes (West's, 2011–2012 Compact Edition). Adopted by the Arizona Department of Environmental Quality on August 24, 2012.

TABLE 3—EPA-APPROVED ARIZONA STATUTES—NON-REGULATORY—Continued

State citation	Title/subject	State submittal date	EPA approval date	Explanation
49–106	Statewide application of rules.	August 24, 2012	November 5, 2012, 77 FR 66398.	Arizona Revised Statutes (West's, 2011–2012 Compact Edition). Adopted by the Arizona Department of Environmental Quality on August 24, 2012.
Chapter 3 (Air Quality) Article 1 (General Provisions)				
49–402	State and county control.	October 29, 2012, and supplemented on September 6, 2013.	September 23, 2014, 79 FR 56655.	West's Arizona Revised Statutes, 2012–2013 Compact Edition.
49–403	Air Quality Compliance Advisory Committee.	July 18, 1988	August 10, 1988, 53 FR 30224; vacated; restored on January 29, 1991, 56 FR 3219.	House Bill 2206, section 15.†
49–404	State implementation plan.	September 1, 1999	June 8, 2000, 65 FR 36353.	House Bill 2189, section 42.
49–404	Department of transportation pilot project on oxygenated fuels, compressed natural gas and liquid propane gas; reports.	July 18, 1988	August 10, 1988, 53 FR 30224; vacated; restored on January 29, 1991, 56 FR 3219.	House Bill 2206, section 15.†
49–405	Attainment area designations.	August 24, 2012	November 5, 2012, 77 FR 66398.	Arizona Revised Statutes (West's, 2011–2012 Compact Edition). Adopted by the Arizona Department of Environmental Quality on August 24, 2012.
49–405	Oxygenated Fuel Fleet Studies Reporting Requirements.	July 18, 1988	August 10, 1988, 53 FR 30224; vacated; restored on January 29, 1991, 56 FR 3219.	House Bill 2206, section 15.≤†
49–406	Nonattainment area plan.	August 11, 1998	June 8, 2000, 65 FR 36353.	Senate Bill 1427, section 15.
49–406	Clean burning reporting requirements; definitions.	July 18, 1988	August 10, 1988, 53 FR 30224; vacated; restored on January 29, 1991, 56 FR 3219.	House Bill 2206, section 15.†

TABLE 3—EPA-APPROVED ARIZONA STATUTES—NON-REGULATORY—Continued

State citation	Title/subject	State submittal date	EPA approval date	Explanation
Article 2 (State Air Pollution Control)				
49–421	Definitions	August 24, 2012	November 5, 2012, 77 FR 66398.	Arizona Revised Statutes (West's, 2011–2012 Compact Edition). Adopted by the Arizona Department of Environmental Quality on August 24, 2012.
49–422	Powers and duties	August 24, 2012	November 5, 2012, 77 FR 66398.	Arizona Revised Statutes (West's, 2011–2012 Compact Edition). Adopted by the Arizona Department of Environmental Quality on August 24, 2012.
49–424	Duties of Department.	April 18, 2014	May 1, 2017, 82 FR 20267.	Submitted on December 21, 2015.
49–425	Rules; hearing	August 24, 2012	November 5, 2012, 77 FR 66398.	Arizona Revised Statutes (West's, 2011–2012 Compact Edition). Adopted by the Arizona Department of Environmental Quality on August 24, 2012.
49–426, excluding paragraphs D, E.1, F, I, J, and M.	Permits; duties of director; exceptions; applications; objections; fees.	July 28, 2011, and supplemented on May 16, 2014.	September 23, 2014, 79 FR 56655.	West's Arizona Revised Statutes, 2012–2013 Compact Edition.
49–433	Special inspection warrant.	August 24, 2012	November 5, 2012, 77 FR 66398.	Arizona Revised Statutes (West's, 2011–2012 Compact Edition). Adopted by the Arizona Department of Environmental Quality on August 24, 2012.
49–435	Hearings on orders of abatement.	August 24, 2012	November 5, 2012, 77 FR 66398.	Arizona Revised Statutes (West's, 2011–2012 Compact Edition). Adopted by the Arizona Department of Environmental Quality on August 24, 2012.

TABLE 3—EPA-APPROVED ARIZONA STATUTES—NON-REGULATORY—Continued

State citation	Title/subject	State submittal date	EPA approval date	Explanation
49–441	Suspension and revocation of conditional order.	August 24, 2012	November 5, 2012, 77 FR 66398.	Arizona Revised Statutes (West's, 2011–2012 Compact Edition). Adopted by the Arizona Department of Environmental Quality on August 24, 2012.
49–455, subsections (A) and (B)(2) only.	Permit administration fund.	August 24, 2012	November 5, 2012, 77 FR 66398.	Arizona Revised Statutes (West's, 2011–2012 Compact Edition). Adopted by the Arizona Department of Environmental Quality on August 24, 2012.
49–460	Violations; production of records.	August 24, 2012	November 5, 2012, 77 FR 66398.	Arizona Revised Statutes (West's, 2011–2012 Compact Edition). Adopted by the Arizona Department of Environmental Quality on August 24, 2012.
49–461	Violations; order of abatement.	August 24, 2012	November 5, 2012, 77 FR 66398.	Arizona Revised Statutes (West's, 2011–2012 Compact Edition). Adopted by the Arizona Department of Environmental Quality on August 24, 2012.
49–462	Violations; injunctive relief.	August 24, 2012	November 5, 2012, 77 FR 66398.	Arizona Revised Statutes (West's, 2011–2012 Compact Edition). Adopted by the Arizona Department of Environmental Quality on August 24, 2012.
49–463	Violations; civil penalties.	August 24, 2012	November 5, 2012, 77 FR 66398.	Arizona Revised Statutes (West's, 2011–2012 Compact Edition). Adopted by the Arizona Department of Environmental Quality on August 24, 2012.

TABLE 3—EPA-APPROVED ARIZONA STATUTES—NON-REGULATORY—Continued

State citation	Title/subject	State submittal date	EPA approval date	Explanation
49–465	Air pollution emergency.	August 24, 2012	November 5, 2012, 77 FR 66398.	Arizona Revised Statutes (West's, 2011–2012 Compact Edition). Adopted by the Arizona Department of Environmental Quality on August 24, 2012.
Article 3 (County Air Pollution Control)				
49–471	Definitions	August 24, 2012	November 5, 2012, 77 FR 66398.	Arizona Revised Statutes (West's, 2011–2012 Compact Edition). Adopted by the Arizona Department of Environmental Quality on August 24, 2012.
49–473	Board of supervisors.	August 24, 2012	November 5, 2012, 77 FR 66398.	Arizona Revised Statutes (West's, 2011–2012 Compact Edition). Adopted by the Arizona Department of Environmental Quality on August 24, 2012.
49–474	County control boards.	August 24, 2012	November 5, 2012, 77 FR 66398.	Arizona Revised Statutes (West's, 2011–2012 Compact Edition). Adopted by the Arizona Department of Environmental Quality on August 24, 2012.
49–476.01	Monitoring	August 24, 2012	November 5, 2012, 77 FR 66398.	Arizona Revised Statutes (West's, 2011–2012 Compact Edition). Adopted by the Arizona Department of Environmental Quality on August 24, 2012.
49–478	Hearing board	August 24, 2012	November 5, 2012, 77 FR 66398.	Arizona Revised Statutes (West's, 2011–2012 Compact Edition). Adopted by the Arizona Department of Environmental Quality on August 24, 2012.

TABLE 3—EPA-APPROVED ARIZONA STATUTES—NON-REGULATORY—Continued

State citation	Title/subject	State submittal date	EPA approval date	Explanation
49–479	Rules; hearing	August 24, 2012	November 5, 2012, 77 FR 66398.	Arizona Revised Statutes (West's, 2011–2012 Compact Edition). Adopted by the Arizona Department of Environmental Quality on August 24, 2012.
49–480.02	Appeals of permit actions.	August 24, 2012	November 5, 2012, 77 FR 66398.	Arizona Revised Statutes (West's, 2011–2012 Compact Edition). Adopted by the Arizona Department of Environmental Quality on August 24, 2012.
49–482	Appeals to hearing board.	August 24, 2012	November 5, 2012, 77 FR 66398.	Arizona Revised Statutes (West's, 2011–2012 Compact Edition). Adopted by the Arizona Department of Environmental Quality on August 24, 2012.
49–488	Special inspection warrant.	August 24, 2012	November 5, 2012, 77 FR 66398.	Arizona Revised Statutes (West's, 2011–2012 Compact Edition). Adopted by the Arizona Department of Environmental Quality on August 24, 2012.
49–490	Hearings on orders of abatement.	August 24, 2012	November 5, 2012, 77 FR 66398.	Arizona Revised Statutes (West's, 2011–2012 Compact Edition). Adopted by the Arizona Department of Environmental Quality on August 24, 2012.
49–495	Suspension and revocation of conditional order.	August 24, 2012	November 5, 2012, 77 FR 66398.	Arizona Revised Statutes (West's, 2011–2012 Compact Edition). Adopted by the Arizona Department of Environmental Quality on August 24, 2012.

TABLE 3—EPA-APPROVED ARIZONA STATUTES—NON-REGULATORY—Continued

State citation	Title/subject	State submittal date	EPA approval date	Explanation
49–502	Violation; classification.	August 24, 2012	November 5, 2012, 77 FR 66398.	Arizona Revised Statutes (West's, 2011–2012 Compact Edition). Adopted by the Arizona Department of Environmental Quality on August 24, 2012.
49–510	Violations; production of records.	August 24, 2012	November 5, 2012, 77 FR 66398.	Arizona Revised Statutes (West's, 2011–2012 Compact Edition). Adopted by the Arizona Department of Environmental Quality on August 24, 2012.
49–511	Violations; order of abatement.	August 24, 2012	November 5, 2012, 77 FR 66398.	Arizona Revised Statutes (West's, 2011–2012 Compact Edition). Adopted by the Arizona Department of Environmental Quality on August 24, 2012.
49–512	Violations; injunctive relief.	August 24, 2012	November 5, 2012, 77 FR 66398.	Arizona Revised Statutes (West's, 2011–2012 Compact Edition). Adopted by the Arizona Department of Environmental Quality on August 24, 2012.
49–513	Violations; civil penalties.	August 24, 2012	November 5, 2012, 77 FR 66398.	Arizona Revised Statutes (West's, 2011–2012 Compact Edition). Adopted by the Arizona Department of Environmental Quality on August 24, 2012.

† Vacated by the U.S. Court of Appeals for the Ninth Circuit in *Delaney* v. *EPA,* 898 F.2d 687 (9th Cir. 1990). Restored on January 29, 1991, 56 FR 3219.

[1] Approved as Chapter 22 (Unblended Gasoline Shortages), Article 1 (General Provisions).

[81 FR 85040, Nov. 23, 2016, as amended at 82 FR 2246, Jan. 9, 2017; 82 FR 15152, Mar. 27, 2017; 82 FR 20268, May 1, 2017; 82 FR 46914, Oct. 10, 2017; 82 FR 59522, Dec. 15, 2017; 83 FR 7615, Feb. 22, 2018; 83 FR 19635, May 4, 2018]

EFFECTIVE DATE NOTE: At 83 FR 26597, June 8, 2018, §52.120 was amended in table 1 of paragraph (e) by adding the entry ''Maintenance Plan Renewal, 1971 Sulfur Dioxide National Ambient Air Quality Standards, Douglas Maintenance Area'' after the entry ''Modeling and Emissions Inventory Supplement for the Douglas Sulfur Dioxide Nonattainment Area State Implementation and Maintenance Plan and Redesignation Request, dated September 2005,'' effective July 9, 2018. For the convenience of the user, the added text is set forth as follows:

§ 52.120 Identification of plan.

* * * * *

(e) * * *

TABLE 1—EPA-APPROVED NON-REGULATORY AND QUASI-REGULATORY MEASURES

[Excluding certain resolutions and statutes, which are listed in tables 2 and 3, respectively] [1]

Name of SIP provision	Applicable geographic or nonattainment area or title/subject	State submittal date	EPA approval date	Explanation
*	*	*	*	*
Part D Elements and Plans (Other than for the Metropolitan Phoenix or Tucson Areas)				
*	*	*	*	*
Maintenance Plan Renewal, 1971 Sulfur Dioxide National Ambient Air Quality Standards, Douglas Maintenance Area.	Douglas Sulfur Dioxide Air Quality Planning Area.	December 14, 2016	June 8, 2018, 83 FR 26596.	Adopted by the Arizona Department of Environmental Quality on December 14, 2016. Fulfills requirements for second 10-year maintenance plan.
*	*	*	*	*

[1] Table 1 is divided into three parts: Clean Air Act Section 110(a)(2) State Implementation Plan Elements (excluding Part D Elements and Plans), Part D Elements and Plans (other than for the Metropolitan Phoenix or Tucson Areas), and Part D Elements and Plans for the Metropolitan Phoenix and Tucson Areas.

* * * * *

§ 52.121 Classification of regions.

The Arizona plan is evaluated on the basis of the following classifications:

AQCR (constituent counties)	Classifications				
	PM	SO_X	NO_2	CO	O_3
Maricopa Intrastate (Maricopa)	I	III	III	I	I
Pima Intrastate (Pima)	I	II	III	III	I
Northern Arizona Intrastate (Apache, Coconino, Navajo, Yavapai)	I	III	III	III	III
Mohave-Yuma Intrastate (Mohave, Yuma)	I	III	III	III	III
Central Arizona Intrastate (Gila, Pinal)	I	IA	III	III	III
Southeast Arizona Intrastate (Cochise, Graham, Greenlee, Santa Cruz)	I	IA	III	III	III

[45 FR 67345, Oct. 10, 1980]

§ 52.122 Negative declarations.

(a) The following air pollution control districts submitted negative declarations for volatile organic compound source categories to satisfy the requirements of section 182 of the Clean Air Act, as amended. The following negative declarations are approved as additional information to the State Implementation Plan.

(1) Maricopa County Environmental Services Department.

(i) Refinery Sources (Refinery Process Turnarounds), Automobile and Light Duty Trucks, Magnet Wire, Flatwood Paneling, Pharmaceuticals and Cosmetic Manufacturing Operations, Rubber Tire Manufacturing, Polymer Manufacturing, Industrial Wastewater, Ship Building and Repair, Synthetic Organic Chemical Manufacturing Industry (SOCMI) Batch Processing, SOCMI Reactors, and SOCMI Distillation were adopted on April 26, 2000 and submitted on December 14, 2000.

(ii) Fiberglass Boat Manufacturing was adopted on March 24, 2004 and submitted on April 21, 2004.

(b) [Reserved]

[67 FR 54743, Aug. 26, 2002, as amended at 70 FR 7041, Feb. 10, 2005]

§ 52.123 Approval status.

(a) With the exceptions set forth in this subpart, the Administrator approved Arizona's plan for the attainment of the national standards.

(b) With the exception set forth in §§ 52.130 and 52.135, the Administrator approves the inspection and maintenance (I/M) program for motor vehicles; the carpool matching program; certain transit improvements; and certain traffic flow improvement and site-specific traffic control measures.

(c) With the exceptions set forth in this subpart, the Administrator approves the plan with respect to Part D, Title I of the Clean Air Act, as amended in 1977, for the nonattainment areas listed in this paragraph.

(1) For TSP, the portion of the Tucson TSP Air Planning Area falling both within the area described by connecting the geographic points in the order listed below in this paragraph and within the townships and sections described below in this paragraph:

Latitude 32°38.5′ N, Longitude 111°24.0′ W
Latitude 32°26.5′ N, Longitude 110°47.5′ W
Latitude 32°12.5′ N, Longitude 110°32.5′ W
Latitude 31°49.5′ N, Longitude 110°25.5′ W
Latitude 31°42.0′ N, Longitude 110°50.5′ W
Latitude 31°52.5′ N, Longitude 111°12.5′ W
Latitude 31°24.5′ N, Longitude 111°29.0′ W

(and return to initial point)

T9S, R9–11E
T10S, R9–13E
T13S, R13E: sections 5, 8–10, 13–17, 20–28, 33–36, 6 (NE and SE quarters only) and 7 (NE and SE quarters only)
T13S, R14E: sections 19–21, 26–35
T14S, R13E: sections 1–3, 10–14, 23–25
T14S, R14E: sections 3–9, 17–19, 30
T17S, R19E
T18S, R19E
T20S, R14–15E

(d) With the exceptions set forth in this subpart, the Administrator approves the plan with respect to Part D, Title I of the Clean Air Act, as amended in 1977, for the nonattainment areas listed in this paragraph. In addition, continued satisfaction of the requirements of Part D for the ozone portion of the State Implementation Plan (SIP) depends on the adoption and submittal by January 1, 1981, of reasonably available control technology (RACT) requirements for sources covered by Control Technique Guidelines (CTG's) published between January 1978 and January 1979.

(1) Maricopa County Urban Planning Area for O_3.

(e) The Administrator finds that the plan does not satisfy all the requirements of Part D, Title I, of the Clean Air Act as amended in 1977 for the nonattainment and area pollutants listed in this paragraph.

(1) Maricopa County Urban Planning Area for CO and TSP.

(2) [Reserved]

(3) The following portion of the Tucson TSP Air Planning Area: The area described by connecting the following geographic points in the order listed below:

Latitude 32°38.5′ N, Longitude 111°24.0′ W
Latitude 32°26.5′ N, Longitude 110°47.5′ W
Latitude 32°12.5′ N, Longitude 110°32.5′ W
Latitude 31°49.5′ N, Longitude 110°25.5′ W
Latitude 31°42.0′ N, Longitude 110°50.5′ W
Latitude 31°52.5′ N, Longitude 111°12.5′ W
Latitude 31°24.5′ N, Longitude 111°29.0′ W

(and return to initial point)

Excluding the area within the following townships:

T9S, R9–11E
T10S, R9–13E
T13S, R13E: sections 5, 8–10, 13–17, 20–28, 33–36, 6 (NE and SE quarters only) and 7 (NE and SE quarters only)
T13S, R14E: sections 19–21, 26–35
T14S, R13E: sections 1–3, 10–14, 23–25
T14S, R14E: sections 3–9, 17–19, 30
T17S, R19E
T18S, R19E
T20S, R14–15E

(f) Maricopa County PM–10 Nonattainment Area (Phoenix Planning Area). (1) *Plan for Attainment of the 24-hour PM–10 Standard—Maricopa County PM–10 Nonattainment Area* (May, 1997) submitted by the Arizona Department of Environmental Quality on May 7, 1997.

(i) [Reserved]

(ii) The Administrator approves the attainment and reasonable further progress demonstrations for the Maryvale PM–10 monitoring site and Salt River PM–10 monitoring site.

(iii) The approvals in paragraphs (f)(1) (i) and (ii) of this section are applicable only to the plan identified in paragraph (f)(1) of this section and do not constitute the Administrator's final decision as to the State's full compliance with the requirements of Clean Air Act sections 189(a)(1)(C) and 189(b)(1)(B) for RACM and BACM and sections 189(a)(1)(B), 189(b)(1)(A) and 189(c)(1) for attainment and reasonable further progress.

(g) Pursuant to the Federal planning authority in section 110(c) of the Clean Air Act, the Administrator finds that the applicable implementation plan for the Maricopa County ozone nonattainment area demonstrates the 15 percent VOC rate of progress required under section 182(b)(1)(A)(i).

(h) Pursuant to the federal planning authority in section 110(c) of the Clean Air Act, the Administrator finds that the applicable implementation plan for the Maricopa County PM–10 nonattainment area provides for the implementation of reasonably available control measures as required by section 189(a)(1)(C) and demonstrates attainment by the applicable attainment date as required and allowed by sections 172(c)(2) and 189(a)(1)(B).

(i) The Administrator approves the Maintenance Plan for the Tucson Air Planning Area submitted by the Arizona Department of Environmental Quality on October 6, 1997 as meeting requirements if section 175(A) of the Clean Air Act and the requirements of EPA's Limited Maintenance Plan option. The Administrator approves the Emissions Inventory contained in the Maintenance Plan as meeting the requirements of section 172(c)(3) of the Clean Air Act.

(j) The Administrator is approving the following elements of the Metropolitan Phoenix PM–10 Nonattainment Area Serious Area PM–10 Plan as contained in *Revised Maricopa Association of Governments 1999 Serious Area Particulate Plan for PM–10 for the Maricopa County Nonattainment Area*, February 2000, submitted February 16, 2000 and *Maricopa County PM–10 Serious Area State Implementation Plan Revision, Agricultural Best Management Practices (BMP)*, ADEQ, June 2000, submitted on June 13, 2001:

(1) 1994 Base year emission inventory pursuant to Clean Air Act section 172(c)(3).

(2) The Provisions for implementing on all significant source categories reasonably available control measures (except for agricultural sources) and best available control measures for the annual and 24-hour PM–10 NAAQS pursuant to section Clean Air Act sections 189(a)(1)(c) and 189(b)(1)(b)).

(3) The demonstration of the impracticability of attainment by December 31, 2001 for the annual and 24-hour PM–10 NAAQS pursuant to Clean Air Act section 189(b)(1)(A)(ii).

(4) The demonstration of attainment by the most expeditious alternative date practicable for the annual and 24-hour PM–10 NAAQS pursuant to Clean Air Act section 189(b)(1)(A)(ii).

(5) The demonstration of reasonable further progress for the annual and 24-hour PM–10 NAAQS pursuant to Clean Air Act section 172(c)(2).

(6) The quantitative milestones for the annual and 24-hour PM–10 NAAQS pursuant to Clean Air Act section 189(c).

(7) The inclusion of the most stringent measures for the annual and 24-hour PM–10 NAAQS pursuant to Clean Air Act section 188(e).

(8) The demonstration that major sources of PM–10 precursors do not contribute significantly to violations for the annual and 24-hour PM–10 NAAQS pursuant to Clean Air Act section 189(e).

(9) The contingency measures for the annual and 24-hour PM–10 NAAQS pursuant to Clean Air Act section 172(c)(9).

(10) The transportation conformity budget for the annual and 24-hour PM–10 NAAQS pursuant to Clean Air Act section 176(c).

(11) The provisions for assuring adequate resources, personnel, and legal authority to carry out the plan for the annual and 24-hour PM–10 NAAQS pursuant to Clean Air Act section 110(a)(2)(E)(i).

(k) The Administrator approves the revised Enhanced Vehicle Inspection and Maintenance Program for the Maricopa County carbon monoxide and ozone nonattainment area submitted by the Arizona Department of Environmental Quality on July 6, 2001 and

April 10, 2002 as meeting the requirements of Clean Air Act sections 182(c)(3) and 187(a)(6) and the requirements for high enhanced inspection and maintenance programs contained in 40 CFR part 51, subpart S.

(l) *1997 8-hour ozone NAAQS:* The SIPs submitted on October 14, 2009 and August 24, 2012 are fully or partially disapproved for Clean Air Act (CAA) elements 110(a)(2)(C), (D)(ii), (J) and (K) for all portions of the Arizona SIP.

(m) *1997 $PM_{2.5}$ NAAQS:* The SIPs submitted on October 14, 2009 and August 24, 2012 are fully or partially disapproved for Clean Air Act (CAA) elements 110(a)(2)(C), (D)(ii), (J) and (K) for all portions of the Arizona SIP.

(n) *2006 $PM_{2.5}$ NAAQS:* The SIPs submitted on October 14, 2009 and August 24, 2012 are fully or partially disapproved for Clean Air Act (CAA) elements 110(a)(2)(C), (D)(i)(II) (interfere with measures in any other state to prevent significant deterioration of air quality), (D)(ii), (J) and (K) for all portions of the Arizona SIP.

(o) *2008 8-hour ozone NAAQS:* The SIPs submitted on October 14, 2011, December 27, 2012, and December 3, 2015 are fully or partially disapproved for Clean Air Act (CAA) elements 110(a)(2)(C), (D)(i)(II), D(ii), (J) and (K) for all portions of the Arizona SIP.

(p) *2008 Lead (Pb) NAAQS:* The SIPs submitted on October 14, 2011 and December 27, 2012 are fully or partially disapproved for Clean Air Act (CAA) elements 110(a)(2)(C), (D)(ii), (J) and (K) for all portions of the Arizona SIP.

[38 FR 33373, Dec. 3, 1973, as amended at 48 FR 254, Jan. 4, 1983; 51 FR 3336, Jan. 27, 1986; 51 FR 33750, Sept. 23, 1986; 62 FR 41864, Aug. 4, 1997; 63 FR 28904, May 27, 1998; 63 FR 41350, Aug. 3, 1998; 65 FR 36358, June 8, 2000; 67 FR 48739, July 25, 2002; 68 FR 2914, Jan. 22, 2003; 77 FR 66404, Nov. 5, 2012; 78 FR 46175, July 30, 2013; 80 FR 40909, July 14, 2015; 80 FR 47862, Aug. 10, 2015; 81 FR 36180, June 6, 2016]

§ 52.124 Part D disapproval.

(a) The following portions of the Arizona SIP are disapproved because they do not meet the requirements of Part D of the Clean Air Act.

(1) The attainment demonstration, conformity and contingency portions of the 1987 Maricopa Association of Governments Carbon Monoxide Plan and 1988 Addendum.

(2) [Reserved]

(b)–(c) [Reserved]

[56 FR 5478, Feb. 11, 1991, as amended at 62 FR 41864, Aug. 4, 1997; 63 FR 41350, Aug. 3, 1998; 65 FR 36358, June 8, 2000; 67 FR 48739, July 25, 2002]

§ 52.125 Control strategy and regulations: Sulfur oxides.

(a)(1) The requirements of subpart G of this chapter are not met since the control strategy does not analyze the impact of smelter fugitive emissions on ambient air quality (except at Hayden, Arizona) in the Central Arizona Intrastate, the Pima Intrastate, and the Southeast Arizona Intrastate (Cochise and Greenlee counties) Regions. Arizona must submit these smelter fugitive emissions control strategies to EPA by August 1, 1984. In addition, the requirements of § 51.281 of this chapter are not met since the plan does not require permanent control of fugitive smelter emissions necessary to attain and maintain the national standards for sulfur oxides. The control strategy for Hayden shows that these controls are required to attain and maintain the national standards, and the fugitive control strategy analyses required above may show that they are required for some or all of the other smelter towns in Arizona. Arizona must submit all fugitive emissions control regulations necessary to attain and maintain the national standards for sulfur oxides to EPA by August 1, 1984. Therefore, the control strategies and regulations for the six smelter areas in the Central Arizona Intrastate, the Pima Intrastate and the Southeast Arizona Intrastate (Cochise and Greenlee counties) Regions are incomplete due to Arizona's failure to address the fugitive emissions problems at copper smelters.

(2) Regulation 7–1–4.1 (copper smelters) of the Arizona Rules and Regulations for Air Pollution Control, as it pertains to existing copper smelters, is disapproved for the Central Arizona Intrastate, Pima Intrastate and Southeast Arizona Intrastate (Cochise and Greenlee counties) Regions.

(b) The requirements of subpart G and § 51.281 of this chapter are not met since the plan does not provide the degree of control necessary to attain and maintain the national standards for

sulfur oxides in the Northern Arizona Intrastate Region. Therefore, Regulation 7–1–4.2(C) (fuel burning installations) of the Arizona Rules and Regulations for Air Pollution Control, as it pertains to existing sources, is disapproved in the Northern Arizona Intrastate Region for steam power generating installations having a total rated capacity equal to or greater than 6,500 million B.t.u. per hour.

(c) *Replacement regulation for Regulation 7–1–4.2(C) (Fossil fuel-fired steam generators in the Northern Arizona Intrastate Region).* (1) This paragraph is applicable to the fossil fuel-fired steam generating equipment designated as Units 1, 2, and 3 at the Navajo Power Plant in the Northern Arizona Intrastate Region (§ 81.270 of this chapter).

(2) No owner or operator of the fossil fuel-fired steam generating equipment to which this paragraph is applicable shall discharge or cause the discharge of sulfur oxides into the atmosphere in excess of the amount prescribed by the following equations:

$$E = 12{,}245\ S \text{ or } e = 1{,}540\ S$$

Where:

E = Allowable sulfur oxides emissions (lb./hr.) from all affected units.

e = Allowable sulfur oxides emissions (gm./sec.) from all affected units.

S = Sulfur content, in percent by weight, prior to any pretreatment of the fuel being burned.

(3) For the purposes of this paragraph:

(i) E shall not exceed 21,270 lb./hr. (2,680 gm./sec.).

(ii) If the sum of sulfur oxides emissions from Units 1, 2, and 3 would be less than 3,780 lb./hr. (475 gm./sec.) without the use of emission control equipment, the requirements of paragraphs (2), (4)(i) and (5) of this paragraph (c), shall not apply for the period of time that the emissions remain below this level.

(iii) The applicability of paragraph (c)(2)(ii) of this section may be determined through a sulfur balance utilizing the analyzed sulfur content of the fuel being burned and the total rate of fuel consumption in all affected units.

(4)(i) No owner or operator of the fossil fuel-fired steam generating equipment subject to this paragraph shall discharge or cause the discharge of sulfur oxides into the atmosphere from any affected unit in excess of the amount prescribed by the following equations, except as provided in paragraph (3)(ii) of this paragraph (c).

$$E_1 = 0.333\ E \text{ or } e_1 = 0.333\ e$$

Where:

E = Allowable sulfur oxides emissions (lb./hr.) from all affected units as determined pursuant to paragraph (2) of this paragraph.

e = Allowable sulfur oxides emissions (gm./sec.) from all affected units as determined pursuant to paragraph (2) of this paragraph (c).

E_1 = Allowable sulfur oxides emissions (lb./hr.) from each affected unit.

e_1 = Allowable sulfur oxides emissions (gm./sec.) from each affected unit.

(ii) The owner or operator of the fossil fuel-fired steam generating equipment to which this paragraph is applicable may submit a request to redesignate the allowable emissions specified in paragraph (c)(4)(i) of this section. Such a request shall be submitted no later than December 2, 1974, and shall demonstrate that sulfur oxides emissions on a total plant basis will not exceed those specified in paragraphs (2) and (3)(i) of this paragraph (c). Upon receipt and evaluation of such request, the Administrator shall consider such and if appropriate, redesignate the allowable emissions specified in paragraph (c)(4)(i) of this section.

(5) All sulfur oxides control equipment at the fossil fuel-fired steam generating equipment to which this paragraph is applicable shall be operated at the maximum practicable efficiency at all times, without regard to the allowable sulfur oxides emissions, determined according to paragraph (2) or (3) of this paragraph (c), except as provided in paragraph (3)(ii) of this paragraph (c).

(6) Compliance with this paragraph shall be in accordance with the provisions of § 52.134(a).

(7) The test methods and procedures used to determine compliance with this paragraph shall be those prescribed in § 60.46(c)(2) and (c)(4) of this chapter. The test methods for determining the sulfur content of fuel shall be those specified in § 60.45(c) and (d) of this chapter.

(d)–(e) [Reserved]

(f)(1) Paragraphs B through E of regulation 7–1–4.2 (R9–3–402) (Sulfur Emissions: Fuel Burning Installations) of the Arizona Air Pollution Control Regulations are disapproved because they could allow existing oil fired facilities to use dispersion dependent techniques alone as a means of attaining and maintaining the national ambient air quality standards. The regulation does not assure the attainment and maintenance of the national standards in a manner which is consistent with the intent of sections 110(a)(2)(B) and 123(a)(2) of the Clean Air Act.

(2) The approval of paragraphs A and F of regulation 7–1–4.2 as to coal fired facilities does not apply to the Salt River Project Agricultural Improvement and Power District-Navajo Generating Station.

(3) Paragraphs B through E of regulation 8–1–4.2 (Sulfur Emissions—Fuel Burning Installations) of the Yuma County Air Pollution Control Regulations are disapproved because they could allow existing facilities to use dispersion dependent techniques alone as a means of attaining and maintaining the National Ambient Air Quality Standards. This regulation does not assure the attainment and maintenance of the national standards in a manner which is consistent with the intent of sections 110(a)(2)(B)and 123(a)(2) of the Clean Air Act.

(g) Section 3, Regulation 3 (Sulfur from Primary Copper Smelters) of the Mohave County Health Department Air Pollution Control Regulations and Regulation 7–3–2.1 (Copper Smelters) of the Pinal-Gila Counties Air Quality Control District are disapproved since Section 36–1706 of the Arizona Revised Statutes grants exclusive jurisdiction to the Arizona Department of Health Services and the State Hearing Board over all existing copper smelters.

(1) The requirements of § 51.13 of this chapter are not met since the plan does not demonstrate that the emission limitations applicable to existing fuel burning equipment producing electrical energy will provide for the attainment and maintenance of the national standards in the Pima Intrastate Region (§ 81.269 of this chapter).

(2) Regulation II: Rule 7A—paragraphs 2 through 5, Emission Limitations Fuel Burning Equipment—Sulfur Dioxide, of the Rules and Regulations of the Pima County Air Pollution Control District are disapproved because they could allow existing facilities to use dispersion dependent techniques along as a means of attaining and maintaining the National Ambient Air Quality Standards. The regulation does not assure the attainment and maintenance of the national standards in a manner which is consistent with the intent of section 110(a)(2)(B) of the Clean Air Act.

[37 FR 15081, July 27, 1972]

EDITORIAL NOTE: For FEDERAL REGISTER citations affecting § 52.125, see the List of CFR Sections Affected, which appears in the Finding Aids section of the printed volume and at *www.fdsys.gov*.

§ 52.126 Control strategy and regulations: Particulate matter.

(a) The requirements of subpart G and § 51.281 of this chapter are not met since the plan does not provide the degree of control necessary to attain and maintain the national standards for particulate matter in Gila, Maricopa, Pima, Pinal, and Santa Cruz Counties. Therefore, Regulation 7–1–3.6 (process industries) of the Arizona Rules and Regulations for Air Pollution Control is disapproved for Gila, Maricopa, Pima, Pinal, and Santa Cruz Counties.

(b) *Replacement regulation for Regulation 7–1–3.6 of the Arizona Rules and Regulations for Air Pollution Control (Gila, Maricopa, Pima, Pinal, and Santa Cruz Counties).* (1) No owner or operator of any stationary process source in Gila, Maricopa, Pima, Pinal, or Santa Cruz County shall discharge or cause the discharge of particulate matter into the atmosphere in excess of the hourly rate shown in the following table for the process weight rate identified for such source:

[In pounds per hour]

Process weight rate	Emission rate	Process weight rate	Emission rate
50	0.36	60,000	29.60
100	0.55	80,000	31.19
500	1.53	120,000	33.28
1,000	2.25	160,000	34.85
5,000	6.34	200,000	36.11
10,000	9.73	400,000	40.35

[In pounds per hour]

Process weight rate	Emission rate	Process weight rate	Emission rate
20,000	14.99	1,000,000	46.72

(2) Paragraph (b)(1) of this section shall not apply to incinerators, fuel burning installations, or Portland cement plants having a process weight rate in excess of 250,000 lb/h.

(3) No owner or operator of a Portland cement plant in Gila, Maricopa, Pima, Pinal, or Santa Cruz County with a process weight rate in excess of 250,000 lb/hr shall discharge or cause the discharge of particulate matter into the atmosphere in excess of the amount specified in § 60.62 of this chapter.

(4) Compliance with this paragraph shall be in accordance with the provisions of § 52.134(a).

(5) The test methods and procedures used to determine compliance with this paragraph are set forth below. The methods referenced are contained in the appendix to part 60 of this chapter. Equivalent methods and procedures may be used if approved by the Administrator.

(i) For each sampling repetition, the average concentration of particulate matter shall be determined by using method 5. Traversing during sampling by method 5 shall be according to method 1. The minimum sampling time shall be 2 hours and the minimum sampling volume shall be 60 ft^3 (1.70 m^3), corrected to standard conditions on a dry basis.

(ii) The volumetric flow rate of the total effluent shall be determined by using method 2 and traversing according to method 1. Gas analysis shall be performed using the integrated sample technique of method 3, and moisture content shall be determined by the condenser technique of method 4.

(iii) All tests shall be conducted while the source is operating at the maximum production or combustion rate at which such source will be operated. During the tests, the source shall burn fuels or combinations of fuels, use raw materials, and maintain process conditions representative of normal operation, and shall operate under such other relevant conditions as the Administrator shall specify.

(c) The requirements of § 51.281 of this chapter are not met since the plan does not contain regulations for Mohave and Yuma Counties in the Mohave-Yuma Intrastate Region or Pinal-Gila Counties in the Central Arizona Intrastate Region which provide enforceable and reproducible test procedures for the determination of compliance with the emission standards. Therefore paragraph C of section 3, regulation 2 (Particulates: Other Sources) of the Mohave County Air Pollution Control Regulations, paragraph B of regulation 8–1–3.6 (Particulates—Process Industries) of the Yuma County Air Pollution Control Regulations, and paragraph C of regulation 7–3–1.4 (Particulate Emissions—Incineration) and paragraph F of regulation 7–3–1.7 (Particulate Emissions—Fuel Burning Equipment) of the Rules and Regulations for Pinal-Gila Counties Air Quality Control District are disapproved.

[37 FR 15081, July 27, 1972, as amended at 38 FR 12704, May 14, 1973; 43 FR 53034, Nov. 15, 1978; 45 FR 67346, Oct. 10, 1980; 51 FR 40676, 40677, Nov. 7, 1986]

§ 52.128 Rule for unpaved parking lots, unpaved roads and vacant lots.

(a) *General*—(1) *Purpose*. The purpose of this section is to limit the emissions of particulate matter into the ambient air from human activity on unpaved parking lots, unpaved roads and vacant lots.

(2) *Applicability*. The provisions of this section shall apply to owners/operators of unpaved roads, unpaved parking lots and vacant lots and responsible parties for weed abatement on vacant lots in the Phoenix PM–10 nonattainment area. This section does not apply to unpaved roads, unpaved parking lots or vacant lots located on an industrial facility, construction, or earth-moving site that has an approved permit issued by Maricopa County Environmental Services Division under Rule 200, Section 305, Rule 210 or Rule 220 containing a Dust Control Plan approved under Rule 310 covering all unpaved parking lots, unpaved roads and vacant lots. This section does not apply to the two Indian Reservations (the Salt

River Pima-Maricopa Indian Community and the Fort McDowell Mojave-Apache Indian Community) and a portion of a third reservation (the Gila River Indian Community) in the Phoenix PM–10 nonattainment area. Nothing in this definition shall preclude applicability of this section to vacant lots with disturbed surface areas due to construction, earth-moving, weed abatement or other dust generating operations which have been terminated for over eight months.

(3) The test methods described in Appendix A of this section shall be used when testing is necessary to determine whether a surface has been stabilized as defined in paragraph (b)(16) of this section.

(b) *Definitions*—(1) *Average daily trips (ADT)*. The average number of vehicles that cross a given surface during a specified 24-hour time period as determined by the Institute of Transportation Engineers Trip Generation Report (6th edition, 1997) or tube counts.

(2) *Chemical/organic stabilizer*—Any non-toxic chemical or organic dust suppressant other than water which meets any specifications, criteria, or tests required by any federal, state, or local water agency and is not prohibited for use by any applicable law, rule or regulation.

(3) *Disturbed surface area*—Any portion of the earth's surface, or materials placed thereon, which has been physically moved, uncovered, destabilized, or otherwise modified from its undisturbed natural condition, thereby increasing the potential for emission of fugitive dust.

(4) *Dust suppressants*—Water, hygroscopic materials, solution of water and chemical surfactant, foam, or non-toxic chemical/organic stabilizers not prohibited for use by any applicable law, rule or regulation, as a treatment material to reduce fugitive dust emissions.

(5) *EPA*—United States Environmental Protection Agency, Region IX, 75 Hawthorne Street, San Francisco, California 94105.

(6) *Fugitive dust*—The particulate matter entrained in the ambient air which is caused from man-made and natural activities such as, but not limited to, movement of soil, vehicles, equipment, blasting, and wind. This excludes particulate matter emitted directly from the exhaust of motor vehicles and other internal combustion engines, from portable brazing, soldering, or welding equipment, and from pile-drivers.

(7) *Lot*—A parcel of land identified on a final or parcel map recorded in the office of the Maricopa County recorder with a separate and distinct number or letter.

(8) *Low use unpaved parking lot*—A lot on which vehicles are parked no more than thirty-five (35) days a year, excluding days where the exemption in paragraph (c)(2) of this section applies.

(9) *Motor vehicle*—A self-propelled vehicle for use on the public roads and highways of the State of Arizona and required to be registered under the Arizona State Uniform Motor Vehicle Act, including any non-motorized attachments, such as, but not limited to, trailers or other conveyances which are connected to or propelled by the actual motorized portion of the vehicle.

(10) *Off-road motor vehicle*—any wheeled vehicle which is used off paved roadways and includes but is not limited to the following:

(i) Any motor cycle or motor-driven cycle;

(ii) Any motor vehicle commonly referred to as a sand buggy, dune buggy, or all terrain vehicle.

(11) *Owner/operator*—any person who owns, leases, operates, controls, maintains or supervises a fugitive dust source subject to the requirements of this section.

(12) *Paving*—Applying asphalt, recycled asphalt, concrete, or asphaltic concrete to a roadway surface.

(13) *Phoenix PM–10 nonattainment area*—such area as defined in 40 CFR 81.303, excluding Apache Junction.

(14) *PM–10*—Particulate matter with an aerodynamic diameter less than or equal to a nominal 10 micrometers as measured by reference or equivalent methods that meet the requirements specified for PM–10 in 40 CFR part 50, Appendix J.

(15) *Reasonably available control measures (RACM)*—Techniques used to prevent the emission and/or airborne transport of fugitive dust and dirt.

(16) *Stabilized surface*—(i) Any unpaved road or unpaved parking lot surface where:

(A) Any fugitive dust plume emanating from vehicular movement does not exceed 20 percent opacity as determined in section I.A of Appendix A of this section; and

(B) Silt loading (weight of silt per unit area) is less than 0.33 ounces per square foot as determined by the test method in section I.B of Appendix A of this section OR where silt loading is greater than or equal to 0.33 ounces per square foot and silt content does not exceed six (6) percent for unpaved road surfaces or eight (8) percent for unpaved parking lot surfaces as determined by the test method in section I.B of Appendix A of this section.

(ii) Any vacant lot surface with:

(A) A visible crust which is sufficient as determined in section II.1 of Appendix A of this section;

(B) A threshold friction velocity (TFV), corrected for non-erodible elements, of 100 cm/second or higher as determined in section II.2 of Appendix A of this section;

(C) Flat vegetation cover equal to at least 50 percent as determined in section II.3 of Appendix A of this section;

(D) Standing vegetation cover equal to or greater than 30 percent as determined in section II.4 of Appendix A of this section; or

(E) Standing vegetation cover equal to or greater than 10 percent as determined in section II.4 of Appendix A of this section where threshold friction velocity, corrected for non-erodible elements, as determined in section II.2 of Appendix A of this section is equal to or greater than 43 cm/second.

(17) *Unpaved parking lot*—A privately or publicly owned or operated area utilized for parking vehicles that is not paved and is not a Low use unpaved parking lot.

(18) *Unpaved road*—Any road, equipment path or driveway used by motor vehicles or off-road motor vehicles that is not paved which is open to public access and owned/operated by any federal, state, county, municipal or other governmental or quasi-governmental agencies.

(19) *Urban or suburban open area*—An unsubdivided or undeveloped tract of land adjoining a residential, industrial or commercial area, located on public or private property.

(20) *Vacant lot*—A subdivided residential, industrial, institutional, governmental or commercial lot which contains no approved or permitted buildings or structures of a temporary or permanent nature.

(c) *Exemptions*. The following requirements in paragraph (d) of this section do not apply:

(1) In paragraphs (d)(1), (d)(2) and (d)(4)(iii) of this section: Any unpaved parking lot or vacant lot 5,000 square feet or less.

(2) In paragraphs (d)(1) and (d)(2) of this section: Any unpaved parking lot on any day in which ten (10) or fewer vehicles enter.

(3) In paragraphs (d)(4)(i) and (d)(4)(ii) of this section: Any vacant lot with less than 0.50 acre (21,780 square feet) of disturbed surface area(s).

(4) In paragraph (d) of this section: Non-routine or emergency maintenance of flood control channels and water retention basins.

(5) In paragraph (d) of this section: Vehicle test and development facilities and operations when dust is required to test and validate design integrity, product quality and/or commercial acceptance. Such facilities and operations shall be exempted from the provisions of this section only if such testing is not feasible within enclosed facilities.

(6) In paragraph (d)(4)(i) of this section: Weed abatement operations performed on any vacant lot or property under the order of a governing agency for the control of a potential fire hazard or otherwise unhealthy condition provided that mowing, cutting, or another similar process is used to maintain weed stubble at least three (3) inches above the soil surface. This includes the application of herbicides provided that the clean-up of any debris does not disturb the soil surface.

(7) In paragraph (d)(4)(i) of this section: Weed abatement operations that receive an approved Earth Moving permit under Maricopa County Rule 200, Section 305 (adopted 11/15/93).

(d) *Requirements*—(1) *Unpaved parking lots*. Any owners/operators of an unpaved parking lot shall implement one

of the following RACM on any surface area(s) of the lot on which vehicles enter and park.

(i) Pave; or

(ii) Apply chemical/organic stabilizers in sufficient concentration and frequency to maintain a stabilized surface; or

(iii) Apply and maintain surface gravel uniformly such that the surface is stabilized; or

(iv) Apply and maintain an alternative control measure such that the surface is stabilized, provided that the alternative measure is not prohibited under paragraph (b)(2) or (b)(4) of this section.

(2) Any owners/operators of a low use unpaved parking lot as defined in paragraph (b)(8) of this section shall implement one of the RACM under paragraph (d)(1) of this section on any day(s) in which over 100 vehicles enter the lot, such that the surface area(s) on which vehicles enter and park is/are stabilized throughout the duration of time that vehicles are parked.

(3) *Unpaved roads.* Any owners/operators of existing unpaved roads with ADT volumes of 250 vehicles or greater shall implement one of the following RACM along the entire surface of the road or road segment that is located within the Phoenix non-attainment area by June 10, 2000:

(i) Pave; or

(ii) Apply chemical/organic stabilizers in sufficient concentration and frequency to maintain a stabilized surface; or

(iii) Apply and maintain surface gravel uniformly such that the surface is stabilized; or

(iv) Apply and maintain an alternative control measure such that the surface is stabilized, provided that the alternative measure is not prohibited under paragraph (b)(2) or (b)(4) of this section.

(4) *Vacant lots.* The following provisions shall be implemented as applicable.

(i) *Weed abatement.* No person shall remove vegetation from any vacant lot by blading, disking, plowing under or any other means without implementing all of the following RACM to prevent or minimize fugitive dust.

(A) Apply a dust suppressant(s) to the total surface area subject to disturbance immediately prior to or during the weed abatement.

(B) Prevent or eliminate material track-out onto paved surfaces and access points adjoining paved surfaces.

(C) Apply a dust suppressant(s), gravel, compaction or alternative control measure immediately following weed abatement to the entire disturbed surface area such that the surface is stabilized.

(ii) *Disturbed surfaces.* Any owners/operators of an urban or suburban open area or vacant lot of which any portion has a disturbed surface area(s) that remain(s) unoccupied, unused, vacant or undeveloped for more than fifteen (15) calendar days shall implement one of the following RACM within sixty (60) calendar days following the disturbance.

(A) Establish ground cover vegetation on all disturbed surface areas in sufficient quantity to maintain a stabilized surface; or

(B) Apply a dust suppressant(s) to all disturbed surface areas in sufficient quantity and frequency to maintain a stabilized surface; or

(C) Restore to a natural state, i.e. as existing in or produced by nature without cultivation or artificial influence, such that all disturbed surface areas are stabilized; or

(D) Apply and maintain surface gravel uniformly such that all disturbed surface areas are stabilized; or

(E) Apply and maintain an alternative control measure such that the surface is stabilized, provided that the alternative measure is not prohibited under paragraph (b)(2) or (b)(4) of this section.

(iii) *Motor vehicle disturbances.* Any owners/operators of an urban or suburban open area or vacant lot of which any portion has a disturbed surface area due to motor vehicle or off-road motor vehicle use or parking, notwithstanding weed abatement operations or use or parking by the owner(s), shall implement one of the following RACM within 60 calendar days following the initial determination of disturbance.

(A) Prevent motor vehicle and off-road motor vehicle trespass/ parking by

applying fencing, shrubs, trees, barriers or other effective measures; or

(B) Apply and maintain surface gravel or chemical/organic stabilizer uniformly such that all disturbed surface areas are stabilized.

(5) *Implementation date of RACM.* All of the requirements in paragraph (d) of this section shall be effective eight (8) months from September 2, 1998. For requirements in paragraph (d)(4)(ii) and (d)(4)(iii) of this section, RACM shall be implemented within eight (8) months from September 2, 1998, or within 60 calendar days following the disturbance, whichever is later.

(e) *Monitoring and records.* (1) Any owners/operators that are subject to the provisions of this section shall compile and retain records that provide evidence of control measure application, indicating the type of treatment or measure, extent of coverage and date applied. For control measures involving chemical/organic stabilization, records shall also indicate the type of product applied, vendor name, label instructions for approved usage, and the method, frequency, concentration and quantity of application.

(2) Copies of control measure records and dust control plans along with supporting documentation shall be retained for at least three years.

(3) *Agency surveys.* (i) EPA or other appropriate entity shall conduct a survey of the number and size (or length) of unpaved roads, unpaved parking lots, and vacant lots subject to the provisions of this section located within the Phoenix PM–10 nonattainment area beginning no later than 365 days from September 2, 1998.

(ii) EPA or other appropriate entity shall conduct a survey at least every three years within the Phoenix PM–10 nonattainment area beginning no later than 365 days from September 2, 1998, which includes:

(A) An estimate of the percentage of unpaved roads, unpaved parking lots, and vacant lots subject to this section to which RACM as required in this section have been applied; and

(B) A description of the most frequently applied RACM and estimates of their control effectiveness.

APPENDIX A TO § 52.128—TEST METHODS TO DETERMINE WHETHER A SURFACE IS STABILIZED

I. Unpaved Roads and Unpaved Parking Lots

A. Opacity Observations

Conduct opacity observations in accordance with Reference Method 9 (40 CFR Part 60, appendix A) and Methods 203A and 203C of this appendix, with opacity readings taken at five second observation intervals and two consecutive readings per plume beginning with the first reading at zero seconds, in accordance with Method 203C, sections 2.3.2. and 2.4.2 of this appendix. Conduct visible opacity tests only on dry unpaved surfaces (i.e. when the surface is not damp to the touch) and on days when average wind speeds do not exceed 15 miles per hour (mph).

(i) Method 203A—Visual Determination of Opacity of Emissions From Stationary Sources for Time-Arranged Regulations

Method 203A is virtually identical to EPA's Method 9 (40 CFR Part 60 Appendix A) except for the data-reduction procedures, which provide for averaging times other than 6 minutes. That is, using Method 203A with a 6-minute averaging time would be the same as following EPA Method 9 (40 CFR Part 60, Appendix A). Additionally, Method 203A provides procedures for fugitive dust applications. The certification procedures provided in section 3 are virtually identical to Method 9 (40 CFR Part 60, Appendix A) and are provided here, in full, for clarity and convenience.

1. Applicability and Principle

1.1 Applicability. This method is applicable for the determination of the opacity of emissions from sources of visible emissions for time-averaged regulations. A time-averaged regulation is any regulation that requires averaging visible emission data to determine the opacity of visible emissions over a specific time period.

1.2 Principle. The opacity of emissions from sources of visible emissions is determined visually by an observer qualified according to the procedures of section 3.

2. Procedures

An observer qualified in accordance with section 3 of this method shall use the following procedures for visually determining the opacity of emissions.

2.1 Procedures for Emissions from Stationary Sources. These procedures are not applicable to this section.

2.2 Procedures for Fugitive Process Dust Emissions. These procedures are applicable for the determination of the opacity of fugitive emissions by a qualified observer. The

qualified field observer should do the following:

2.2.1 Position. Stand at a position at least 5 meters from the fugitive dust source in order to provide a clear view of the emissions with the sun oriented in the 140-degree sector to the back. Consistent as much as possible with maintaining the above requirements, make opacity observations from a position such that the line of vision is approximately perpendicular to the plume and wind direction. As much as possible, if multiple plumes are involved, do not include more than one plume in the line of sight at one time.

2.2.2 Field Records. Record the name of the plant or site, fugitive source location, source type [pile, stack industrial process unit, incinerator, open burning operation activity, material handling (transfer, loading, sorting, etc.)], method of control used, if any, observer's name, certification data and affiliation, and a sketch of the observer's position relative to the fugitive source. Also, record the time, estimated distance to the fugitive source location, approximate wind direction, estimated wind speed, description of the sky condition (presence and color of clouds), observer's position relative to the fugitive source, and color of the plume and type of background on the visible emission observation form when opacity readings are initiated and completed.

2.2.3 Observations. Make opacity observations, to the extent possible, using a contrasting background that is perpendicular to the line of vision. For roads, storage piles, and parking lots, make opacity observations approximately 1 meter above the surface from which the plume is generated. For other fugitive sources, make opacity observations at the point of greatest opacity in that portion of the plume where condensed water vapor is not present. For intermittent sources, the initial observation should begin immediately after a plume has been created above the surface involved. Do not look continuously at the plume but, instead, observe the plume momentarily at 15-second intervals.

2.3 Recording Observations. Record the opacity observations to the nearest 5 percent every 15 seconds on an observational record sheet. Each momentary observation recorded represents the average opacity of emissions for a 15-second period.

2.4 Data Reduction for Time-Averaged Regulations. A set of observations is composed of an appropriate number of consecutive observations determined by the averaging time specified. Divide the recorded observations into sets of appropriate time lengths for the specified averaging time. Sets must consist of consecutive observations; however, observations immediately preceding and following interrupted observations shall be deemed consecutive. Sets need not be consecutive in time and in no case shall two sets overlap, resulting in multiple violations. For each set of observations, calculate the appropriate average opacity.

3. Qualification and Testing

3.1 Certification Requirements. To receive certification as a qualified observer, a candidate must be tested and demonstrate the ability to assign opacity readings in 5 percent increments to 25 different black plumes and 25 different white plumes, with an error not to exceed 15 percent opacity on any one reading and an average error not to exceed 7.5 percent opacity in each category. Candidates shall be tested according to the procedures described in paragraph 3.2. Any smoke generator used pursuant to paragraph 3.2 shall be equipped with a smoke meter which meets the requirements of paragraph 3.3. Certification tests that do not meet the requirements of paragraphs 3.2 and 3.3 are not valid.

The certification shall be valid for a period of 6 months, and after each 6-month period, the qualification procedures must be repeated by an observer in order to retain certification.

3.2 Certification Procedure. The certification test consists of showing the candidate a complete run of 50 plumes, 25 black plumes and 25 white plumes, generated by a smoke generator. Plumes shall be presented in random order within each set of 25 black and 25 white plumes. The candidate assigns an opacity value to each plume and records the observation on a suitable form. At the completion of each run of 50 readings, the score of the candidate is determined. If a candidate fails to qualify, the complete run of 50 readings must be repeated in any retest. The smoke test may be administered as part of a smoke school or training program, and may be preceded by training or familiarization runs of the smoke generator during which candidates are shown black and white plumes of known opacity.

3.3 Smoke Generator Specifications. Any smoke generator used for the purpose of paragraph 3.2 shall be equipped with a smoke meter installed to measure opacity across the diameter of the smoke generator stack. The smoke meter output shall display in-stack opacity, based upon a path length equal to the stack exit diameter on a full 0 to 100 percent chart recorder scale. The smoke meter optical design and performance shall meet the specifications shown in Table A. The smoke meter shall be calibrated as prescribed in paragraph 3.3.1 prior to conducting each smoke reading test. At the completion of each test, the zero and span drift, shall be checked, and if the drift exceeds ±1 percent opacity, the condition shall be corrected prior to conducting any subsequent test runs. The smoke meter shall be demonstrated at the time of installation to

meet the specifications listed in Table A. This demonstration shall be repeated following any subsequent repair or replacement of the photocell or associated electronic circuitry including the chart recorder or output meter, or every 6 months, whichever occurs first.

3.3.1 Calibration. The smoke meter is calibrated after allowing a minimum of 30 minutes warm-up by alternately producing simulated opacity of 0 percent and 100 percent. When stable response at 0 percent or 100 percent is noted, the smoke meter is adjusted to produce an output of 0 percent or 100 percent, as appropriate. This calibration shall be repeated until stable 0 percent and 100 percent readings are produced without adjustment. Simulated 0 percent and 100 percent opacity values may be produced by alternately switching the power to the light source on and off while the smoke generator is not producing smoke.

3.3.2 Smoke Meter Evaluation. The smoke meter design and performance are to be evaluated as follows:

3.3.2.1 Light Source. Verify from manufacturer's data and from voltage measurements made at the lamp, as installed, that the lamp is operated within ±5 percent of the nominal rated voltage.

3.3.2.2 Spectral Response of Photocell. Verify from manufacturer's data that the photocell has a photopic response; i.e., the spectral sensitivity of the cell shall closely approximate the standard spectral-luminosity curve for photopic vision which is referenced in (b) of Table A.

3.3.2.3 Angle of View. Check construction geometry to ensure that the total angle of view of the smoke plume, as seen by the photocell, does not exceed 15 degrees. Calculate the total angle of view as follows:

$$\varphi_v = 2 \tan^{-1} d/2L$$

Where:

φ_v = total angle of view;

d = the photocell diameter + the diameter of the limiting aperture; and

L = distance from the photocell to the limiting aperture.

The limiting aperture is the point in the path between the photocell and the smoke plume where the angle of view is most restricted. In smoke generator smoke meters, this is normally an orifice plate.

3.3.2.4 Angle of Projection. Check construction geometry to ensure that the total angle of projection of the lamp on the smoke plume does not exceed 15 degrees. Calculate the total angle of projection as follows:

$$\varphi_p = 2 \tan^{-1} d/2L$$

Where:

φ_p = total angle of projection;

d = the sum of the length of the lamp filament + the diameter of the limiting aperture; and

L = the distance from the lamp to the limiting aperture.

3.3.2.5 Calibration Error. Using neutral-density filters of known opacity, check the error between the actual response and the theoretical linear response of the smoke meter. This check is accomplished by first calibrating the smoke meter according to 3.3.1 and then inserting a series of three neutral-density filters of nominal opacity of 20, 50, and 75 percent in the smoke meter path length. Use filters calibrated within ±2 percent. Care should be taken when inserting the filters to prevent stray light from affecting the meter. Make a total of five nonconsecutive readings for each filter. The maximum opacity error on any one reading shall be ±3 percent.

3.3.2.6 Zero and Span Drift. Determine the zero and span drift by calibrating and operating the smoke generator in a normal manner over a 1-hour period. The drift is measured by checking the zero and span at the end of this period.

3.3.2.7 Response Time. Determine the response time by producing the series of five simulated 0 percent and 100 percent opacity values and observing the time required to reach stable response. Opacity values of 0 percent and 100 percent may be simulated by alternately switching the power to the light source off and on while the smoke generator is not operating.

4. References

1. U.S. Environmental Protection Agency. Standards of Performance for New Stationary Sources; appendix A; Method 9 for Visual Determination of the Opacity of Emissions from Stationary Sources. Final Rule. 39 FR 219. Washington, DC. U.S. Government Printing Office. November 12, 1974.

2. Office of Air and Radiation. ''Quality Assurance Guideline for Visible Emission Training Programs.'' EPA–600/S4–83–011. Quality Assurance Division. Research Triangle Park, N.C. May 1982.

3. ''Method 9—Visible Determination of the Opacity of Emissions from Stationary Sources.'' February 1984. Quality Assurance Handbook for Air Pollution Measurement Systems. Volume III, section 3.1.2. Stationary Source Specific Methods. EPA–600–4–77–027b. August 1977. Office of Research and Development Publications, 26 West Clair Street, Cincinnati, OH.

4. Office of Air Quality Planning and Standards. ''Opacity Error for Averaging and Nonaveraging Data Reduction and Reporting Techniques.'' Final Report–SR–1–6–85. Emission Measurement Branch, Research Triangle Park, N.C. June 1985.

5. The U.S. Environmental Protection Agency. Preparation, Adoption, and Submittal of State Implementation Plans. Methods for Measurement of PM_{10} Emissions from Stationary Sources. Final Rule. FEDERAL REGISTER. Washington, DC. U.S. Government Printing Office. Volumes 55. No. 74. pps. 14246–14279. April 17, 1990.

(ii) Method 203C—Visual Determination of Opacity of Emissions From Stationary Sources for Instantaneous Limitation Regulations

Method 203C is virtually identical to EPA's Method 9 (40 CFR Part 60, Appendix A), except for the data-reduction procedures which have been modified for application to instantaneous limitation regulations. Additionally, Method 203C provides procedures for fugitive dust applications which were unavailable when Method 9 was promulgated. The certification procedures in section 3 are identical to Method 9. These certification procedures are provided in Method 203A as well, and, therefore, have not been repeated in this method.

1. Applicability and Principle

1.1 Applicability. This method is applicable for the determination of the opacity of emissions from sources of visible emissions for instantaneous limitations. An instantaneous limitation regulation is an opacity limit which is never to be exceeded.

1.2 Principle. The opacity of emissions from sources of visible emissions is determined visually by a qualified observer.

2. Procedures

The observer qualified in accordance with section 3 of this method shall use the following procedures for visually determining the opacity of emissions.

2.1 Procedures for Emissions From Stationary Sources. Same as 2.1, Method 203A.

2.1.1 Position. Same as 2.1.1, Method 203A.

2.1.2 Field Records. Same as 2.1.2, Method 203A.

2.1.3 Observations. Make opacity observations at the point of greatest opacity in that portion of the plume where condensed water vapor is not present.

Do not look continuously at the plume. Instead, observe the plume momentarily at the interval specified in the subject regulation. Unless otherwise specified, a 15-second observation interval is assumed.

2.1.3.1 Attached Steam Plumes. Same as 2.1.3.1, Method 203A.

2.1.3.2 Detached Steam Plumes. Same as 2.1.3.2, Method 203A.

2.2 Procedures for Fugitive Process Dust Emissions.

2.2.1 Position. Same as section 2.2.1, Method 203A.

2.2.2 Field Records. Same as section 2.2.2, Method 203A.

2.2.3 Observations.

2.2.3.1 Observations for a 15-second Observation Interval Regulations. Same as section 2.2.3, Method 203A.

2.2.3.2 Observations for a 5-second Observation Interval Regulations. Same as section 2.2.3, Method 203A, except, observe the plume momentarily at 5-second intervals.

2.3 Recording Observations. Record opacity observations to the nearest 5 percent at the prescribed interval on an observational record sheet. Each momentary observation recorded represents the average of emissions for the prescribed period. If a 5-second observation period is not specified in the applicable regulation, a 15-second interval is assumed. The overall time for which recordings are made shall be of a length appropriate to the regulation for which opacity is being measured.

2.3.1 Recording Observations for 15-second Observation Interval Regulations. Record opacity observations to the nearest 5 percent at 15-second intervals on an observational record sheet. Each momentary observation recorded represents the average of emissions for a 15-second period.

2.3.2 Recording Observations for 5-second Observation Interval Regulations. Record opacity observations to the nearest 5 percent at 5-second intervals on an observational record sheet. Each momentary observation recorded represents the average of emissions for 5-second period.

2.4 Data Reduction for Instantaneous Limitation Regulations. For an instantaneous limitation regulation, a 1-minute averaging time will be used. Divide the observations recorded on the record sheet into sets of consecutive observations. A set is composed of the consecutive observations made in 1 minute. Sets need not be consecutive in time, and in no case shall two sets overlap. Reduce opacity observations by dividing the sum of all observations recorded in a set by the number of observations recorded in each set.

2.4.1 Data Reduction for 15-second Observation Intervals. Reduce opacity observations by averaging four consecutive observations recorded at 15-second intervals. Divide the observations recorded on the record sheet into sets of four consecutive observations. For each set of four observations, calculate the average by summing the opacity of the four observations and dividing this sum by four.

2.4.2 Data Reduction for 5-second Observation Intervals. Reduce opacity observations by averaging 12 consecutive observations recorded at 5-second intervals. Divide the observations recorded on the record sheet into sets of 12 consecutive observations. For each set of 12 observations, calculate the average

by summing the opacity of the 12 observations and dividing this sum by 12.

3. Qualification and Test

Same as section 3, Method 203A.

TABLE A—SMOKE METER DESIGN AND PERFORMANCE SPECIFICATIONS

Parameter	Specification
a. Light Source	Incandescent lamp operated at nominal rated voltage.
b. Spectral response of photocell.	Photopic (daylight spectral response of the human eye—Reference 4.1 of section 4.)
c. Angle of view	15 degrees maximum total angle
d. Angle of projection.	15 degrees maximum total angle.
e. Calibration error	±3 percent opacity, maximum.
f. Zero and span drift.	±1 percent opacity, 30 minutes.
g. Response time ...	≤5 seconds.

B. Silt Content

Conduct the following test method to determine the silt loading and silt content of unpaved road and unpaved parking lot surfaces.

(i) Collect a sample of loose surface material from an area 30 cm by 30 cm (1 foot by 1 foot) in size to a depth of approximately 1 cm or until a hard subsurface is reached, whichever occurs first. Use a brush and dustpan or other similar device. Collect the sample from a routinely-traveled portion of the surface which receives a preponderance of vehicle traffic, i.e. as commonly evidenced by tire tracks. Conduct sweeping slowly so that fine surface material is not released into the air. Only collect samples from surfaces that are not wet or damp due to precipitation or dew.

(ii) Obtain a shallow, lightweight container and a scale with readings in half ounce increments or less. Place the scale on a level surface and zero it with the weight of the empty container. Transfer the entire sample collected to the container, minimizing escape of particles into the air. Weigh the sample and record its weight.

(iii) Obtain and stack a set of sieves with the following openings: 4 mm, 2 mm, 1 mm, 0.5 mm, and 0.25 mm. Place the sieves in order according to size openings beginning with the largest size opening at the top. Place a collector pan underneath the bottom (0.25 mm) sieve. Pour the entire sample into the top sieve, minimizing escape of particles into the air by positioning the sieve/collector pan unit in an enclosed or wind barricaded area. Cover the sieve/collector pan unit with a lid. Shake the covered sieve/collector pan unit vigorously for a period of at least one (1) minute in both the horizontal and vertical planes. Remove the lid from the sieve/collector pan unit and disassemble each sieve separately beginning with the largest sieve. As each sieve is removed, examine it for a complete separation of material in order to ensure that all material has been sifted to the finest sieve through which it can pass. If not, reassemble and cover the sieve/collector pan unit and shake it for period of at least one (1) minute. After disassembling the sieve/collector pan unit, transfer the material which is captured in the collector pan into the lightweight container originally used to collect and weigh the sample. Minimize escape of particles into the air when transferring the material into the container. Weigh the container with the material from the collector pan and record its weight. Multiply the resulting weight by 0.38 if the source is an unpaved road or by 0.55 if the source is an unpaved parking lot to estimate silt loading. Divide by the total sample weight and multiply by 100 to arrive at the percent silt content.

(iv) As an alternative to conducting the procedure described above in section I.B.(ii) and section I.B.(iii) of this appendix, the sample (collected according to section I.B.(i) of this appendix) may be taken to an independent testing laboratory or engineering facility for silt loading (*e.g.* net weight <200 mesh) and silt content analysis according to the following test method from ''Procedures For Laboratory Analysis Of Surface/Bulk Dust Loading Samples'', (Fifth Edition, Volume I, Appendix C.2.3 ''Silt Analysis'', 1995), AP–42, Office of Air Quality Planning & Standards, U.S. Environmental Protection Agency, Research Triangle Park, North Carolina.

1. Objective—Several open dust emission factors have been found to be correlated with the silt content(<200 mesh) of the material being disturbed. The basic procedure for silt content determination is mechanical, dry sieving. For sources other than paved roads, the same sample which was oven-dried to determine moisture content is then mechanically sieved.

2.1 Procedure—Select the appropriate 20-cm (8-in.) diameter, 5-cm (2-in.) deep sieve sizes.

Recommended U. S. Standard Series sizes are ⅜ in., No. 4, No. 40, No. 100, No. 140, No. 200, and a pan. Comparable Tyler Series sizes can also be used. The No. 20 and the No. 200 are mandatory. The others can be varied if the recommended sieves are not available, or if buildup on 1 particulate sieve during sieving indicates that an intermediate sieve should be inserted.

2.2 Obtain a mechanical sieving device, such as a vibratory shaker or a Roto-Tap δ[1] without the tapping function.

2.3 Clean the sieves with compressed air and/or a soft brush. Any material lodged in

[1] CFR part 60, App. A, Meth. 5, 2.1.2, footnote 2.

the sieve openings or adhering to the sides of the sieve should be removed, without handling the screen roughly, if possible.

2.4 Obtain a scale (capacity of at least 1600 grams [g] or 3.5 lb) and record make, capacity, smallest division, date of last calibration, and accuracy. (See Figure A)

2.5 Weigh the sieves and pan to determine tare weights. Check the zero before every weighing. Record the weights.

2.6 After nesting the sieves in decreasing order of size, and with pan at the bottom, dump dried laboratory sample (preferably immediately after moisture analysis) into the top sieve. The sample should weigh between ¢ 400 and 1600 g (¢ 0.9 and 3.5 lb). This amount will vary for finely textured materials, and 100 to 300 g may be sufficient when 90% of the sample passes a No. 8 (2.36 mm) sieve. Brush any fine material adhering to the sides of the container into the top sieve and cover the top sieve with a special lid normally purchased with the pan.

2.7 Place nested sieves into the mechanical sieving device and sieve for 10 minutes (min). Remove pan containing minus No. 200 and weigh. Repeat the sieving at 10-min intervals until the difference between 2 successive pan sample weighings (with the pan tare weight subtracted) is less than 3.0%. Do not sieve longer than 40 min.

2.8 Weigh each sieve and its contents and record the weight. Check the zero before every weighing.

2.9 Collect the laboratory sample. Place the sample in a separate container if further analysis is expected.

2.10 Calculate the percent of mass less than the 200 mesh screen (75 micrometers [μm]). This is the silt content.

Figure A. Example silt analysis form.

Silt Analysis

Dated: _____
By: _____
Sample No: _____ Sample Weight (after drying)
Material: _____
Pan + Sample: _____
Pan: _____
Split Sample Balance: _____
Dry Sample: _____
Make _____ Capacity: _____
Smallest Division _____
Final Weight _____
% Silt = [Net Weight <200 Mesh] ÷ [Total Net Weight × 100] =____%

SIEVING

Time: Start:	Weight (Pan Only)
Initial (Tare): 10 min: 20 min: 30 min: 40 min:	

Screen	Tare weight (screen)	Final weight (screen + sample)	Net weight (sample)	%
⅜ in. 4 mesh. 10 mesh. 20 mesh. 40 mesh. 100 mesh. 140 mesh. 200 mesh. Pan.				

(v) The silt loading and percent silt content for any given unpaved road surface or unpaved parking lot surface shall be based on the average of at least three (3) samples that are representative of routinely-traveled portions of the road or parking lot surface. In order to simplify the sieve test procedures in section I.B.(ii) and section I.B.(iii) of this appendix, the three samples may be combined as long as all material is sifted to the finest sieve through which it can pass, each sample weighs within 1 ounce of the other two samples, and the combined weight of the samples and unit area from which they were collected is calculated and recorded accurately.

II. Vacant Lots

The following test methods shall be used for determining whether a vacant lot, or portion thereof, has a stabilized surface.

Should a disturbed vacant lot contain more than one type of disturbance, soil, vegetation or other characteristics which are visibly distinguishable, test each representative surface for stability separately in random areas according to the test methods in section II. of this appendix and include or eliminate it from the total size assessment of disturbed surface area(s) depending upon test method results. A vacant lot surface shall be considered stabilized if any of the test methods in section II. of this appendix indicate that the surface is stabilized such

that the conditions defined in paragraph (b)(16)(ii) of this section are met:

1. Visible Crust Determination

(i) Where a visible crust exists, drop a steel ball with a diameter of 15.9 millimeters (0.625 inches) and a mass ranging from 16 to 17 grams from a distance of 30 centimeters (one foot) directly above (at a 90 degree angle perpendicular to) the soil surface. If blowsand is present, clear the blowsand from the surfaces on which the visible crust test method is conducted. Blowsand is defined as thin deposits of loose uncombined grains covering less than 50 percent of a vacant lot which have not originated from the representative vacant lot surface being tested. If material covers a visible crust which is not blowsand, apply the test method in section II.2 of this appendix to the loose material to determine whether the surface is stabilized.

(ii) A sufficient crust is defined under the following conditions: once a ball has been dropped according to section II.1.(i) of this appendix, the ball does not sink into the surface so that it is partially or fully surrounded by loose grains and, upon removing the ball, the surface upon which it fell has not been pulverized so that loose grains are visible.

(iii) Conduct three tests, dropping the ball once per test, within a survey area the size of one foot by one foot. The survey area shall be considered sufficiently crusted if at least two out of three tests meet the definition in section II.1.(ii) of this appendix. Select at least two other survey areas that represent the disturbed surface area and repeat this procedure. Whether a sufficient crust covers the disturbed surface area shall be based on a determination that all of the survey areas tested are sufficiently crusted.

(iv) At any given site, the existence of a sufficient crust covering one portion of a disturbed surface may not represent the existence or protectiveness of a crust on another disturbed surface(s). Repeat the visible crust test as often as necessary on each representative disturbed surface area for an accurate assessment of all disturbed surfaces at a given site.

2. Determination of Threshold Friction Velocity (TFV)

For disturbed surface areas that are not crusted or vegetated, determine threshold friction velocity (TFV) according to the following sieving field procedure (based on a 1952 laboratory procedure published by W. S. Chepil).

(i) Obtain and stack a set of sieves with the following openings: 4 millimeters (mm), 2 mm, 1 mm, 0.5 mm, and 0.25 mm. Place the sieves in order according to size openings beginning with the largest size opening at the top. Place a collector pan underneath the bottom (0.25 mm) sieve. Collect a sample of loose surface material from an area at least 30 cm by 30 cm in size to a depth of approximately 1 cm using a brush and dustpan or other similar device. Only collect soil samples from dry surfaces (i.e. when the surface is not damp to the touch). Remove any rocks larger than 1 cm in diameter from the sample. Pour the sample into the top sieve (4 mm opening) and cover the sieve/collector pan unit with a lid. Minimize escape of particles into the air when transferring surface soil into the sieve/collector pan unit. Move the covered sieve/collector pan unit by hand using a broad, circular arm motion in the horizontal plane. Complete twenty circular arm movements, ten clockwise and ten counterclockwise, at a speed just necessary to achieve some relative horizontal motion between the sieves and the particles. Remove the lid from the sieve/collector pan unit and disassemble each sieve separately beginning with the largest sieve. As each sieve is removed, examine it for loose particles. If loose particles have not been sifted to the finest sieve through which they can pass, reassemble and cover the sieve/collector pan unit and gently rotate it an additional ten times. After disassembling the sieve/collector pan unit, slightly tilt and gently tap each sieve and the collector pan so that material aligns along one side. In doing so, minimize escape of particles into the air. Line up the sieves and collector pan in a row and visibly inspect the relative quantities of catch in order to determine which sieve (or whether the collector pan) contains the greatest volume of material. If a visual determination of relative volumes of catch among sieves is difficult, use a graduated cylinder to measure the volume. Estimate TFV for the sieve catch with the greatest volume using Table 1, which provides a correlation between sieve opening size and TFV.

TABLE 1 (METRIC UNITS)—DETERMINATION OF THRESHOLD FRICTION VELOCITY (TFV)

Tyler Sieve No.	Opening (mm)	TFV (cm/s)
5	4	>100
10	2	100
18	1	76
35	0.5	58
60	0.25	43
Collector Pan	.....	30

Collect at least three (3) soil samples which are representative of the disturbed surface area, repeat the above TFV test method for each sample and average the resulting TFVs together to determine the TFV uncorrected for non-erodible elements.

(ii) Non-erodible elements are distinct elements on the disturbed surface area that are larger than one (1) cm in diameter, remain

firmly in place during a wind episode and inhibit soil loss by consuming part of the shear stress of the wind. Non-erodible elements include stones and bulk surface material but do not include flat or standing vegetation. For surfaces with non-erodible elements, determine corrections to the TFV by identifying the fraction of the survey area, as viewed from directly overhead, that is occupied by non-erodible elements using the following procedure. Select a survey area of one (1) meter by 1 meter. Where many non-erodible elements lie on the disturbed surface area, separate them into groups according to size. For each group, calculate the overhead area for the non-erodible elements according to the following equations:

(Average length) × (Average width) = Average Dimensions *Eq. 1*

(Average Dimensions) × (Number of Elements) = Overhead Area *Eq. 2*

Overhead Area of Group 1 + Overhead Area of Group 2 (etc.) = Total Overhead Area *Eq. 3*

Total Overhead Area/2 = Total Frontal Area *Eq. 4*

(Total Frontal Area/Survey Area) × 100 = Percent Cover of Non-erodible Elements *Eq. 5*

(Ensure consistent units of measurement, e.g. square meters or square inches when calculating percent cover.)

Repeat this procedure on an additional two (2) distinct survey areas representing a disturbed surface and average the results. Use Table 2 to identify the correction factor for the percent cover of non-erodible elements. Multiply the TFV by the corresponding correction factor to calculate the TFV corrected for non-erodible elements.

TABLE 2—CORRECTION FACTORS FOR THRESHOLD FRICTION VELOCITY

Percent cover of non-erodible elements	Correction factor
≥10%	5
≥5% and <10%	3
<5% and ≥1%	2
<1%	None.

3. Determination of Flat Vegetation Cover

Flat vegetation includes attached (rooted) vegetation or unattached vegetative debris lying on the surface with a predominant horizontal orientation that is not subject to movement by wind. Flat vegetation which is dead but firmly attached shall be considered equally protective as live vegetation. Stones or other aggregate larger than one centimeter in diameter shall be considered protective cover in the course of conducting the line transect method. Where flat vegetation exists, conduct the following line transect method.

(i) Stretch a one-hundred (100) foot measuring tape across a disturbed surface area. Firmly anchor both ends of the measuring tape into the surface using a tool such as a screwdriver with the tape stretched taut and close to the soil surface. If vegetation exists in regular rows, place the tape diagonally (at approximately a 45 degree angle) away from a parallel or perpendicular position to the vegetated rows. Pinpoint an area the size of a 3⁄32 inch diameter brazing rod or wooden dowel centered above each one-foot interval mark along one edge of the tape. Count the number of times that flat vegetation lies directly underneath the pinpointed area at one-foot intervals. Consistently observe the underlying surface from a 90 degree angle directly above each pinpoint on one side of the tape. Do not count the underlying surface as vegetated if any portion of the pinpoint extends beyond the edge of the vegetation underneath in any direction. If clumps of vegetation or vegetative debris lie underneath the pinpointed area, count the surface as vegetated unless bare soil is visible directly below the pinpointed area. When 100 observations have been made, add together the number of times a surface was counted as vegetated. This total represents the percent of flat vegetation cover (e.g. if 35 positive counts were made, then vegetation cover is 35 percent). If the disturbed surface area is too small for 100 observations, make as many observations as possible. Then multiply the count of vegetated surface areas by the appropriate conversion factor to obtain percent cover. For example, if vegetation was counted 20 times within a total of 50 observations, divide 20 by 50 and multiply by 100 to obtain a flat vegetation cover of 40 percent.

(ii) Conduct the above line transect test method an additional two (2) times on areas representative of the disturbed surface and average results.

4. Determination of Standing Vegetation Cover

Standing vegetation includes vegetation that is attached (rooted) with a predominant vertical orientation. Standing vegetation which is dead but firmly rooted shall be considered equally protective as live vegetation. Conduct the following standing vegetation test method to determine if 30 percent cover or more exists. If the resulting percent cover is less than 30 percent but equal to or greater than 10 percent, then conduct the Threshold Friction Velocity test in section II.2 of this appendix in order to determine whether the disturbed surface area is stabilized according to paragraph (b)(16)(ii)(E) of this section.

(i) For standing vegetation that consists of large, separate vegetative structures (for example, shrubs and sagebrush), select a survey area representing the disturbed surface that is the shape of a square with sides equal to at least ten (10) times the average height

of the vegetative structures. For smaller standing vegetation, select a survey area of three (3) feet by 3 feet.

(ii) Count the number of standing vegetative structures within the survey area. Count vegetation which grows in clumps as a single unit. Where different types of vegetation exists and/or vegetation of different height and width exists, separate the vegetative structures with similar dimensions into groups. Count the number of vegetative structures in each group within the survey area. Select an individual structure within each group that represents the average height and width of the vegetation in the group. If the structure is dense (i.e. when looking at it vertically from base to top there is little or zero open air space within its perimeter), calculate and record its frontal silhouette area according to Equation 6 of this appendix. Also use Equation 6 if the survey area is larger than nine square feet, estimating the average height and width of the vegetation. Otherwise, use the procedure in section II.4.(iii) of this appendix to calculate the Frontal Silhouette Area. Then calculate the percent cover of standing vegetation according to Equations 7, 8 and 9 of this appendix. (Ensure consistent units of measurement, e.g. square feet or square inches when calculating percent cover.)

(iii) Vegetative Density Factor. Cut a single, representative piece of vegetation (or consolidated vegetative structure) to within 1 cm of surface soil. Using a white paper grid or transparent grid over white paper, lay the vegetation flat on top of the grid (but do not apply pressure to flatten the structure). Grid boxes of one inch or one half inch squares are sufficient for most vegetation when conducting this procedure. Using a marker or pencil, outline the shape of the vegetation along its outer perimeter according to Figure B, C or D of this appendix, as appropriate. (NOTE: Figure C differs from Figure D primarily in that the width of vegetation in Figure C is narrow at its base and gradually broadens to its tallest height. In Figure D, the width of the vegetation generally becomes narrower from its midpoint to its tallest height.) Remove the vegetation and count and record the total number of gridline intersections within the outlined area, but do not count gridline intersections that connect with the outlined shape. There must be at least 10 gridline intersections within the outlined area and preferably more than 20, otherwise, use smaller grid boxes. Draw small circles (no greater than a 3/32 inch diameter) at each gridline intersection counted within the outlined area. Replace the vegetation on the grid within its outlined shape. From a distance of approximately two feet directly above the grid, observe each circled gridline intersection. Count and record the number of circled gridline intersections that are not covered by any piece of the vegetation. To calculate percent vegetative density, use Equations 10 and 11 of this appendix. If percent vegetative density is equal to or greater than 30, use the equation (Eq. 14, 15 or 16) that matches the outline used to trace the vegetation (Figure B, C or D) to calculate its Frontal Silhouette Area. If percent vegetative density is less than 30, use Equations 12 and 13 of this appendix to calculate the Frontal Silhouette Area.

(iv) Within a disturbed surface area that contains multiple types of vegetation with each vegetation type uniformly distributed, results of the percent cover associated with the individual vegetation types may be added together.

(v) Repeat this procedure on an additional two (2) distinct survey areas representing the disturbed surface and average the results.

Height × Width = Frontal Silhouette Area *Eq. 6*

(Frontal Silhouette Area of Individual Vegetative Structure) × Number of Vegetation Structures Per Group = Group Frontal Silhouette Area of Group *Eq. 7*

Frontal Silhouette Area of Group 1 + Frontal Silhouette Area of Group 2 (etc.) = Total Frontal Silhouette Area *Eq. 8*

(Total Frontal Silhouette Area/Survey Area) × 100 = Percent Cover of Standing Vegetation *Eq. 9*

[(Number of circled gridlines within the outlined area counted that are not covered by vegetation / Total number of gridline intersections within the outlined area) × 100] = Percent Open Space *Eq. 10*

100 = Percent Open Space = Percent Vegetative Density *Eq. 11*

Percent Vegetative Density/100 = Vegetative Density *Eq. 12*

$$[\text{Max. Height} * \text{Width}] * \left[\frac{\text{Vegetative Density}}{0.4}\right]^{0.5} = \text{Frontal Silhouette Area} \qquad \text{Eq. 13}$$

Figure B

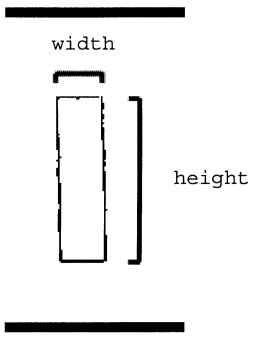

Cylinder:

Frontal Silhouette Area =

maximum (max.) height X max. width

Eq. 14

Figure C

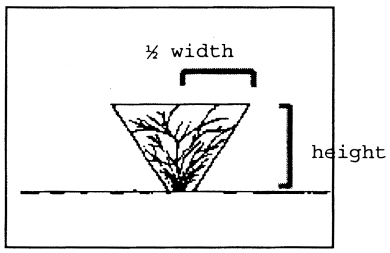

Inverted Cone:

Frontal Silhouette Area =

max. height X ½ max. width

Eq. 15

Figure D

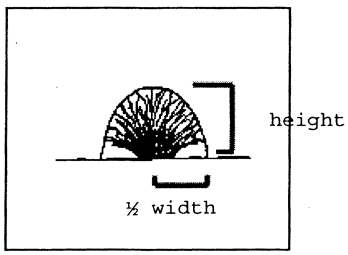

Upper Sphere:

Frontal Silhouette Area =

(3.14 X max. height X ½ max. width)/2

Eq. 16

Alternative Test Methods

Alternative test methods may be used upon obtaining the written approval of the EPA.

[64 FR 71308, Dec. 21, 1999]

§52.129 Review of new sources and modifications.

(a) [Reserved]

(b) *National standards not met.* The requirements of §51.160(a) of this chapter are not met in the Pima Intrastate Region since the Rules and Regulations of the Pima County Air Pollution Control

District are not adequate to prevent construction or modification of a source which would interfere with the attainment or maintenance of the national standards.

(c) *Regulation for review of new sources and modifications.* (1) The requirements of this paragraph are applicable to any stationary source in the Pima Intrastate Region (§ 81.269 of this chapter), the construction or modification of which is commenced after the effective date of this regulation.

(2) No owner or operator shall commence construction or modification of any new source after the effective date of this regulation without first obtaining approval from the Administrator of the location of such source.

(i) Application for approval to construct or modify shall be made on forms furnished by the Administrator, or by other means prescribed by the Administrator.

(ii) A separate application is required for each source.

(iii) Each application shall be signed by the applicant.

(iv) Each application shall be accompanied by site information, stack data, and the nature and amount of emissions. Such information shall be sufficient to enable the Administrator to make any determination pursuant to paragraph (c)(3) of this section.

(v) Any additional information, plans, specifications, evidence or documentation that the Administrator may require shall be furnished upon request.

(3) No approval to construct or modify will be granted unless the applicant shows to the satisfaction of the Administrator that the source will not prevent or interfere with attainment or maintenance of any national standard.

(4)(i) Within twenty (20) days after receipt of an application to construct, or any addition to such application, the Administrator shall advise the owner or operator of any deficiency in the information submitted in support of the application. In the event of such a deficiency, the date of receipt of the application for the purpose of paragraph (c)(4)(ii) of this section, shall be the date on which all required information is received by the Administrator.

(ii) Within thirty (30) days after receipt of a complete application, the Administrator shall:

(*a*) Make a preliminary determination whether the source should be approved, approved with conditions, or disapproved.

(*b*) Make available in at least one location in each region in which the proposed source would be constructed, a copy of all materials submitted by the owner or operator, a copy of the Administrator's preliminary determination and a copy or summary of other materials, if any, considered by the Administrator in making his preliminary determination; and

(*c*) Notify the public, by prominent advertisement in a newspaper of general circulation in each region in which the proposed source would be constructed, of the opportunity for written public comment on the information submitted by the owner or operator and the Administrator's preliminary determination on the approvability of the source.

(iii) A copy of the notice required pursuant to this paragraph shall be sent to the applicant and to state and local air pollution control agencies, having cognizance over the location where the source will be situated.

(iv) Public comments submitted in writing within thirty (30) days after the date such information is made available shall be considered by the Administrator in making his final decision on the application. No later than ten (10) days after the close of the public comment period, the applicant may submit a written response to any comment submitted by the public. The Administrator shall consider the applicant's response in making his final decision. All comments shall be made available for public inspection in at least one location in the region in which the source would be located.

(v) The Administrator shall take final action on an application within thirty (30) days after the close of the public comment period. The Administrator shall notify the applicant in writing of his approval, conditional approval, or denial of the application, and

shall set forth his reasons for conditional approval or denial. Such notification shall be made available for public inspection in at least one location in the region in which the source would be located.

(vi) The Administrator may extend each of the time periods specified in paragraph (c)(4) (ii), (iv) or (v) of this section by no more than 30 days, or such other period as agreed to by the applicant and the Administrator.

(5) The Administrator may cancel an approval if the construction is not begun within 2 years from the date of issuance, or if during the construction, work is suspended for 1 year.

(6) Approval to construct or modify shall not relieve any owner or operator of the responsibility to comply with any local, State or Federal regulation which is part of the applicable plan.

(7) Approval to construct or modify shall not be required for:

(i) The installation or alteration of an air pollutant detector, air pollutants recorder, combustion controller, or combustion shutoff.

(ii) Airconditioning or ventilating systems not designed to remove air pollutants generated by or released from equipment.

(iii) Fuel burning equipment, other than smokehouse generators, which has a heat input of not more than 250 MBtu/h (62.5 billion g-cal/h) and burns only gaseous fuel containing not more than 20.0 grain H_2 S per 100 stdft^3 (45.8 g/100 stdm^3); has a heat input of not more than 1 MBtu/h (250 Mg-cal/h) and burns only distillate oil; or has a heat input of not more than 350,000 Btu/h (88.2 Mg-cal/h) and burns any other fuel.

(iv) Mobile internal combustion engines.

(v) Laboratory equipment used exclusively for chemical or physical analysis.

(vi) Other sources of minor significance specified by the Administrator.

(8) Any owner or operator who constructs, modifies, or operates a stationary source not in accordance with the application, as approved and conditioned by the Administrator, or any owner or operator of a stationary source subject to this paragraph who commences construction or modification without applying for and receiving approval hereunder, shall be subject to enforcement action under section 113 of the Act.

(d) *Regulation for review of new sources and modifications: Federal Regulations.* (1) This requirement is applicable to any stationary source subject to the requirements of § 52.126(b), the construction or modification of which is commenced after the effective date of this regulation.

(2) No owner or operator shall commence construction or modification of any stationary source after the effective date of this regulation, without first obtaining approval from the Administrator of the location and design of such source.

(i) Application for approval to construct or modify shall be made on forms furnished by the Administrator, or by other means prescribed by the Administrator.

(ii) A separate application is required for each source.

(iii) Each application shall be signed by the applicant.

(iv) Each application shall be accompanied by site information, plans, descriptions, specifications, and drawings showing the design of the source, the nature and amount of emissions, and the manner in which it will be operated and controlled.

(v) Any additional information, plans, specifications, evidence, or documentation that the Administrator may require shall be furnished upon request.

(3) No approval to construct or modify will be granted unless the applicant shows to the satisfaction of the Administrator that the source will operate without causing a violation of § 52.126(b).

(4)(i) Within twenty (20) days after receipt of an application to construct, or any addition to such application, the Administrator shall advise the owner or operator of any deficiency in the information submitted in support of the application. In the event of such a deficiency, the date of receipt of the application for the purpose of paragraph (d)(4)(ii) of this section, shall be the date on which all required information is received by the Administrator.

(ii) Within thirty (30) days after receipt of a complete application, the Administrator shall:

(*a*) Make a preliminary determination whether the source should be approved, approved with conditions, or disapproved.

(*b*) Make available in at least one location in each region in which the proposed source would be constructed, a copy of all materials submitted by the owner or operator, a copy of the Administrator's preliminary determination and a copy or summary of other materials, if any, considered by the Administrator in making his preliminary determination; and

(*c*) Notify the public, by prominent advertisement in a newspaper of general circulation in each region in which the proposed source would be constructed, of the opportunity for written public comment on the information submitted by the owner or operator and the Administrator's preliminary determination on the approvability of the source.

(iii) A copy of the notice required pursuant to this paragraph shall be sent to the applicant and to state and local air pollution control agencies, having cognizance over the location where the source will be situated.

(iv) Public comments submitted in writing within thirty (30) days after the date such information is made available shall be considered by the Administrator in making his final decision on the application. No later than ten (10) days after the close of the public comment period, the applicant may submit a written response to any comment submitted by the public. The Administrator shall consider the applicant's response in making his final decision. All comments shall be made available for public inspection in at least one location in the region in which the source would be located.

(v) The Administrator shall take final action on an application within thirty (30) days after the close of the public comment period. The Administrator shall notify the applicant in writing of his approval, conditional approval, or denial of the application, and shall set forth his reasons for conditional approval or denial. Such notification shall be made available for public inspection in at least one location in the region in which the source would be located.

(vi) The Administrator may extend each of the time periods specified in paragraph (d)(4)(ii), (iv) or (v) of this section by no more than 30 days, or such other period as agreed to by the applicant and the Administrator.

(5) The Administrator may impose any reasonable conditions upon an approval including conditions requiring the source to be provided with:

(i) Sampling ports of a size, number, and location as the Administrator may require,

(ii) Safe access to each port,

(iii) Instrumentation to monitor and record emission data, and

(iv) Any other sampling and testing facilities.

(6) The Administrator may cancel an approval if the construction is not begun within 2 years from the date of issuance, or if during the construction, work is suspended for 1 year.

(7) Any owner or operator subject to the provisions of this regulation shall furnish the Administrator written notification as follows:

(i) A notification of the anticipated date of initial startup of source not more than 60 days or less than 30 days prior to such date.

(ii) A notification of the actual date of initial startup of a source within 15 days after such date.

(8) Within 60 days after achieving the maximum production rate at which the source will be operated but not later than 180 days after initial startup of such source, the owner or operator of such source shall conduct a performance test(s) in accordance with the methods and under operating conditions approved by the Administrator and furnish the Administrator a written report of the results of such performance test.

(i) Such test shall be at the expense of the owner or operator.

(ii) The Administrator may monitor such test and also may conduct performance tests.

(iii) The owner or operator of a source shall provide the Administrator 15 days prior notice of the performance test to afford the Administrator the

opportunity to have an observer present.

(iv) The Administrator may waive the requirement for performance tests if the owner or operator of a source has demonstrated by other means to the Administrator's satisfaction that the source is being operated in compliance with the requirements of § 52.126(b).

(9) Approval to construct or modify shall not relieve the owner or operator of the responsibility to comply with all local, State, or Federal regulations which are part of the applicable plan.

(10) Approval to construct or modify shall not be required for:

(i) The installation or alteration of an air pollutant detector, air pollutants recorder, combustion controller, or combustion shutoff.

(ii) Air-conditioning or ventilating systems not designed to remove air pollutants generated by or released from equipment.

(iii) Fuel burning equipment, other than smokehouse generators, which has a heat input of not more than 250 MBtu/h (62.5 billion g-cal/h) and burns only gaseous fuel containing not more than 20.0 grain H_2 S per 100 stdft^3 (45.8 g/100 stdm^3); has a heat input of not more than 1 MBtu/h (250 Mg-cal/h) and burns only distillate oil; or has a heat input of not more than 350,000 Btu/h (88.2 Mg-cal/h) and burns any other fuel.

(iv) Mobile internal combustion engines.

(v) Laboratory equipment used exclusively for chemical or physical analyses.

(vi) Other sources of minor significance specified by the Administrator.

(11) Any owner or operator who constructs, modifies, or operates a stationary source not in accordance with the application, as approved and conditioned by the Administrator, or any owner or operator of a stationary source subject to this paragraph who commences construction or modification without applying for and receiving approval hereunder, shall be subject to enforcement action under section 113 of the Act.

(e) *Delegation of authority*. (1) The Administrator shall have the authority to delegate responsibility for implementing the procedures for conducting source review pursuant to this section in accordance with paragraphs (g) (2), (3), and (4) of this section.

(2) Where the Administrator delegates the responsibility for implementing the procedures for conducting source review pursuant to this section to any Agency, other than a Regional Office of the Environmental Protection Agency, a copy of the notice pursuant to paragraphs (c)(4)(iii) and (d)(4)(iii) of this section shall be sent to the Administrator through the appropriate Regional Office.

(3) In accordance with Executive Order 11752, the Administrator's authority for implementing the procedures for conducting source review pursuant to this section shall not be delegated, other than to a Regional Office of the Environmental Protection Agency, for new or modified sources which are owned or operated by the Federal government or for new or modified sources located on Federal lands; except that, with respect to the latter category, where new or modified sources are constructed or operated on Federal lands pursuant to leasing or other Federal agreements, the Federal Land Manager may at his discretion, to the extent permissible under applicable statutes and regulations, require the lessee or permittee to be subject to new source review requirements which have been delegated to a state or local agency pursuant to this paragraph.

(4) The Administrator's authority for implementing the procedures for conducting source review pursuant to this section shall not be redelegated, other than to a Regional Office of the Environmental Protection Agency, for new or modified sources which are located in Indian reservations except where the State has assumed jurisdiction over such land under other laws, in which case the Administrator may delegate his authority to the States in accordance with paragraphs (g)(2), (3), and (4) of this section.

[37 FR 15081, July 27, 1972, as amended at 38 FR 12705, May 14, 1973; 39 FR 7279, Feb. 25, 1974; 39 FR 28285, Aug. 8, 1974; 40 FR 50268, Oct. 29, 1975; 45 FR 67346, Oct. 10, 1980; 51 FR 40677, Nov. 7, 1986; 60 FR 33922, June 29, 1995]

§ 52.130 Source surveillance.

(a) The requirements of § 51.211 of this chapter are not met since the plan does not contain legally enforceable procedures for requiring sources in the Northern Arizona, Mohave-Yuma, Central Arizona, and Southeast Arizona Intrastate Regions to maintain records of and periodically report on the nature and amounts of emissions.

(b) The requirements of § 51.213 of this chapter are not met because the plan does not provide procedures for obtaining and maintaining data on actual emission reductions achieved as a result of implementing transportation control measures.

(c) *Regulation for source recordkeeping and reporting.* (1) The owner or operator of any stationary source in the Northern Arizona, Mohave-Yuma, Central Arizona, or Southeast Arizona Intrastate Region (§§ 81.270, 81.268, 81.271, and 81.272 of this chapter) shall, upon notification from the Administrator, maintain records of the nature and amounts of emissions from such source or any other information as may be deemed necessary by the Administrator to determine whether such source is in compliance with applicable emission limitations or other control measures.

(2) The information recorded shall be summarized and reported to the Administrator, and shall be submitted within 45 days after the end of the reporting period. Reporting periods are January 1 to June 30 and July 1 to December 31, except that the initial reporting period shall commence on the date the Administrator issues notification of the recordkeeping requirements.

(3) Information recorded by the owner or operator and copies of the summarizing reports submitted to the Administrator shall be retained by the owner or operator for 2 years after the date on which the pertinent report is submitted.

(4) Emission data obtained from owners or operators of stationary sources will be correlated with applicable emission limitations and other control measures. All such emission data will be available during normal business hours at the regional office (region IX). The Administrator will designate one or more places in Arizona where such emission data and correlations will be available for public inspection.

(d) The requirements of § 51.214 of this chapter are not met since the plan does not contain legally enforceable procedures for requiring certain stationary sources subject to emission standards to install, calibrate, operate, and maintain equipment for continuously monitoring and recording emissions, and to provide other information as specified in Appendix P of part 51 of this chapter.

(e) The requirements of § 51.214 of this chapter are not met since the plan does not provide sufficient regulations to meet the minimum specifications of Appendix P in the Maricopa Intrastate Region. Additionally, Maricopa County Air Pollution Control Regulation IV, rule 41, paragraph B, sections 6.0–6.4 (Special Consideration) is disapproved since it does not contain the specific criteria for determining those physical limitations or extreme economic situations where alternative monitoring requirements would be applicable.

[37 FR 15081, July 27, 1972]

EDITORIAL NOTE: For FEDERAL REGISTER citations affecting § 52.130, see the List of CFR Sections Affected, which appears in the Finding Aids section of the printed volume and at *www.fdsys.gov.*

§ 52.131 Control Strategy and regulations: Fine Particle Matter.

(a) *Determination of Attainment:* Effective February 6, 2013, EPA has determined that, based on 2009 to 2011 ambient air quality data, the Nogales $PM_{2.5}$ nonattainment area has attained the 2006 24-hour $PM_{2.5}$ NAAQS. This determination suspends the requirements for this area to submit an attainment demonstration, associated reasonably available control measures, a reasonable further progress plan, contingency measures, and other planning SIPs related to attainment for as long as this area continues to attain the 2006 24-hour $PM_{2.5}$ NAAQS. If EPA determines, after notice-and-comment rulemaking, that this area no longer meets the 2006 $PM_{2.5}$ NAAQS, the corresponding determination of attainment for that area shall be withdrawn.

(b) *Determination of Attainment:* Effective October 4, 2013, EPA has determined that, based on 2010 to 2012 ambient air quality data, the West Central Pinal $PM_{2.5}$ nonattainment area has attained the 2006 24-hour $PM_{2.5}$ NAAQS. This determination suspends the requirements for this area to submit an attainment demonstration, associated reasonably available control measures, a reasonable further progress plan, contingency measures, and other planning SIPs related to attainment for as long as this area continues to attain the 2006 24-hour $PM_{2.5}$ NAAQS. If EPA determines, after notice-and-comment rulemaking, that this area no longer meets the 2006 $PM_{2.5}$ NAAQS, the corresponding determination of attainment for that area shall be withdrawn.

(c) *Determination of attainment.* Effective June 9, 2017, the EPA has determined that, based on 2013 to 2015 ambient air quality data, the Nogales, AZ $PM_{2.5}$ nonattainment area has attained the 2006 24-hour $PM_{2.5}$ NAAQS by the applicable attainment date of December 31, 2015. Therefore, the EPA has met the requirement pursuant to CAA section 188(b)(2) to determine whether the area attained the standard. The EPA also has determined that the Nogales, AZ nonattainment area will not be reclassified for failure to attain by its applicable attainment date under section 188(b)(2).

[78 FR 889, Jan. 7, 2013, as amended at 78 FR 54396, Sept. 4, 2013; 82 FR 21715, May 10, 2017]

§ 52.132 [Reserved]

§ 52.133 Rules and regulations.

(a) Regulation 7–1–1.4(A) (Exceptions) of the Arizona Rules and Regulations for Air Pollution Control, regulations 12–3–2 (Emission Standards) of the Coconino County Rules and Regulations for Air Pollution Control, section 3, regulation 5 (Exceptions) of the Mohave County Air Pollution Control Regulations, regulation 8–1–1.6 (Exceptions) of the Yuma County Air Pollution Control Regulations, and regulation 7–1–2.8 (Exceptions) of the Rules and Regulations for Pinal-Gila Counties Air Quality Control District all provide for an exemption from enforcement action if the violation is attributable to certain events. These events are too broad in scope and the source can obtain the exemption merely by reporting the occurrence. Therefore, the above regulations are disapproved since these regulations make all approved emission limiting regulations potentially unenforceable.

(b) Paragraph E of regulation 7–1–1.3 (R9–3–103) (Air Pollution Prohibited) prohibits any person from causing ground level concentrations to exceed ambient standards outside the boundaries of this operation. This regulation could allow violations of ambient air quality standards to occur in areas to which the public has access, contrary to the requirements of section 110(a)(1) of the Clean Air Act. Therefore, paragraph E of regulation 7–1–1.3 (R9–3–103) of the Arizona Rules and Regulations for Air Pollution Control is disapproved.

(c) The requirements of subpart G and § 51.281 of this chapter are not met since the plan does not provide any enforceable regulations and a demonstration that such regulations will cause the attainment and maintenance of national ambient air quality standards in Graham and Greenlee Counties.

(d) Section 3, regulation 4 (Ground Level Concentrations) of the Mohave County Air Pollution Control Regulations, paragraph E of regulation 8–1–1.3 (Air Pollution Prohibited) of the Yuma County Air Pollution Control Regulations, and paragraph C of regulation 7–1–1.3 (Air Pollution Prohibited) of the Rules and Regulations for Pinal-Gila Counties Air Quality Control District prohibits any person from causing ground level concentrations to exceed ambient standards outside the boundaries of his operation. These regulations could allow violations of ambient air quality standards to occur in areas to which the general public has access, contrary to the requirements of section 110(a)(1) of the Clean Air Act. Therefore, these regulations are disapproved.

(e) Rule R18–2–702 of the Arizona Department of Environmental Quality Rules and Regulations sets an opacity standard for emissions from stationary sources of PM–10. The standard does not fulfill the RACM/RACT requirements of section 189(a) of the CAA. The rule also does not comply with enforceability requirements of section 110(a)

and SIP relaxation requirements of sections 110(l) and 193. Therefore, Rule R18–2–702 submitted on July 15, 1998 is disapproved.

(f) Rules 1–3–130 and 3–1–020 submitted on November 27, 1995 of the Pinal County Air Quality Control District regulations have limited enforceability because they reference rules not contained in the Arizona State Implementation Plan. Therefore, these rules are removed from the Arizona State Implementation Plan.

(g) Rules 1–2–110, 1–3–130, 3–1–020, and 4–1–010 submitted on October 7, 1998 of the Pinal County Air Quality Control District regulations have limited enforceability because they reference rules not contained in the Arizona State Implementation Plan. Therefore, these rules are disapproved.

[37 FR 15082, July 27, 1972, as amended at 43 FR 33247, July 31, 1978; 43 FR 53035, Nov. 15, 1978; 51 FR 40676, 40677, Nov. 7, 1986; 67 FR 59460, Sept. 23, 2002; 67 FR 68767, Nov. 13, 2002]

§ 52.134 Compliance schedules.

(a) *Federal compliance schedule.* (1) Except as provided in paragraph (a)(2) of this section, the owner or operator of any stationary source subject to § 52.126(b) shall comply with such regulation on or before January 31, 1974. The owner or operator of the source subject to § 52.125(c) shall comply with such regulation at initial start-up of such source unless a compliance schedule has been submitted pursuant to paragraph (a)(2) of this section.

(i) Any owner or operator in compliance with § 52.126(b) on the effective date of this regulation shall certify such compliance to the Administrator no later than 120 days following the effective date of this paragraph.

(ii) Any owner or operator who achieves compliance with § 52.125(c) or § 52.126(b) after the effective date of this regulation shall certify such compliance to the Administrator within 5 days of the date compliance is achieved.

(2) Any owner or operator of the stationary source subject to § 52.125(c) and paragraph (a)(1) of this section may, no later than July 23, 1973, submit to the Administrator for approval a proposed compliance schedule that demonstrates compliance with § 52.125(c) as expeditiously as practicable but not later than July 31, 1977. Any owner or operator of a stationary source subject to § 52.126(b) and paragraph (a)(1) of this section may, no later than 120 days following the effective date of this paragraph, submit to the Administrator for approval a proposed compliance schedule that demonstrates compliance with § 52.126(b) as expeditiously as practicable but not later than July 31, 1975.

(i) The compliance schedule shall provide for periodic increments of progress toward compliance. The dates for achievement of such increments shall be specified. Increments of progress shall include, but not be limited to: Submittal of the final control plan to the Administrator; letting of necessary contracts for construction or process change, or issuance of orders for the purchase of component parts to accomplish emission control equipment or process modification; completion of onsite construction or installation of emission control equipment or process modification; and final compliance.

(ii) Any compliance schedule for the stationary source subject to § 52.125(c) which extends beyond July 31, 1975, shall apply any reasonable interim measures of control designed to reduce the impact of such source on public health.

(3) Any owner or operator who submits a compliance schedule pursuant to this paragraph shall, within 5 days after the deadline for each increment of progress, certify to the Administrator whether or not the required increment of the approved compliance schedule has been met.

[38 FR 12705, May 14, 1973, as amended at 39 FR 10584, Mar. 21, 1974; 39 FR 43277, Dec. 12, 1974; 40 FR 3994, Jan. 27, 1975; 54 FR 25258, June 14, 1989]

§ 52.135 Resources.

(a) The requirements of § 51.280 of this chapter are not met because the transportation control plan does not contain a sufficient description of resources available to the State and local agencies and of additional resources needed to carry out the plan during the 5-year period following submittal.

[38 FR 16564, June 22, 1973, as amended at 51 FR 40677, Nov. 7, 1986]

§ 52.136 Control strategy for ozone: Oxides of nitrogen.

EPA is approving an exemption request submitted by the State of Arizona on April 13, 1994 for the Maricopa County ozone nonattainment area from the NO_X RACT requirements contained in section 182(f) of the Clean Air Act. This approval exempts the Phoenix area from implementing the NO_X requirements for RACT, new source review (NSR), and the applicable general and transportation conformity and inspection and maintenance (I/M) requirements of the CAA. The exemption is based on Urban Airshed Modeling as lasts for only as long as the area's modeling continues to demonstrate attainment without NO_X reductions from major stationary sources.

[60 FR 19515, Apr. 19, 1995]

§ 52.137 [Reserved]

§ 52.138 Conformity procedures.

(a) *Purpose*. The purpose of this regulation is to provide procedures as part of the Arizona carbon monoxide implementation plans for metropolitan transportation planning organizations (MPOs) to use when determining conformity of transportation plans, programs, and projects. Section 176(c) of the Clean Air Act (42 U.S.C. 7506(c)) prohibits MPOs from approving any project, program, or plan which does not conform to an implementation plan approved or promulgated under section 110.

(b) *Definitions*.

(1) *Applicable implementation plan* or *applicable plan* means the portion (or portions) of the implementation plan, or most recent revision thereof, which has been approved under section 110 of the Clean Air Act, 42 U.S.C. 7410, or promulgated under section 110(c) of the CAA, 42 U.S.C. 7410(c).

(2) *Carbon monoxide national ambient air quality standard (CO NAAQS)* means the standards for carbon monoxide promulgated by the Administrator under section 109, 42 U.S.C. 7409, of the Clean Air Act and found in 40 CFR 50.8

(3) *Cause* means resulting in a violation of the CO NAAQS in an area which previously did not have ambient CO concentrations above the CO NAAQS.

(4) *Contribute* means resulting in measurably higher average 8-hour ambient CO concentrations over the NAAQS or an increased number of violations of the NAAQS in an area which currently experiences CO levels above the standard.

(5) *Metropolitan planning organization (MPO)* means the organization designated under 23 U.S.C. 134 and 23 CFR part 450.106. For the specific purposes of this regulation, MPO means either the Maricopa Association of Governments or the Pima Association of Governments.

(6) *Nonattainment area* means for the specific purpose of this regulation either the Pima County carbon monoxide nonattainment area as described in 40 CFR 81.303 or the Maricopa County carbon monoxide nonattainment area as described in 40 CFR 81.303 (i.e., the MAG urban planning area).

(7) *Transportation control measure (TCM)* means any measure in an applicable implementation plan which is intended to reduce emissions from transportation sources.

(8) *Transportation improvement program (TIP)* means the staged multiyear program of transportation improvements including an annual (or biennial) element which is required in 23 CFR part 450.

(9) *Unified planning work program* or *UPWP* means the program required by 23 CFR 450.108(c) and endorsed by the metropolitan planning organization which describes urban transportation and transportation-related planning activities anticipated in the area during the next 1- to 2-year period including the planning work to be performed with federal planning assistance and with funds available under the Urban Mass Transportation Act (49 U.S.C.) section 9 or 9A. UPWPs are also known as overallwork programs or OWPs.

(c) *Applicability*. These procedures shall apply only to the Maricopa Association of Governments in its role as the designated metropolitan planning organization for Maricopa County, Arizona, and the Pima Association of Governments in its role as the designated metropolitan planning organization for Pima County, Arizona.

(d) *Procedures*—(1) *Transportation Plans and Transportation Improvement*

Programs—(i) *Documentation*. The MPO shall prepare for each transportation plan and program (except for the unified planning work program), as part of the plan or program, a report documenting for each plan and program the following information:

(A) the disaggregated population projections and employment which were assumed in:

(*1*) the applicable plan, and

(*2*) the transportation plan/program;

(B) the levels of vehicle trips, vehicle miles traveled, and congestion that were:

(*1*) assumed in the applicable plan, and

(*2*) expected to result from the implementation of the plan/program over the period covered by the applicable plan considering any growth likely to result from the implementation of the plan/program;

(C) for each major transportation control measure in the applicable implementation plan;

(*1*) the TCM's implementation schedule and, if determined in the applicable plan, expected effectiveness in reducing CO emissions,

(*2*) the TCM's current implementation status and, if feasible, its current effectiveness in reducing CO emissions, and

(*3*) actions in the plan/program which may beneficially or adversely affect the implementation and/or effectiveness of the TCM;

(D) the CO emission levels resulting from the implementation of the plan/program over the period covered by the applicable plan considering any growth likely to result from the implementation of the plan/program; and

(E) the ambient CO concentration levels, micro-scale and regional, resulting from the implementation of the plan/program over the period covered by the applicable plan considering any growth likely to result from the implementation of the plan or program.

(ii) *Findings*. Prior to approving a transportation plan/program, the MPO shall determine if the plan/program conforms to the applicable implementation plan. In making this determination, the MPO shall make and support each of the following findings for each transportation plan and program using the information documented in paragraph (d)(1)(i) of this section:

(A) that implementation of the transportation plan/program will provide for the implementation of TCMs in the applicable plan on the schedule set forth in the applicable plan;

(B) that CO emission levels, microscale and regional, resulting from the implementation of the plan/program will not delay attainment or achievement of any interim emission reductions needed for attainment and/or interfere with maintenance of the CONAAQS throughout the nonattainment area during the period covered by the applicable plan; and

(C) that implementation of the plan/program would not cause or contribute to a violation of the CO NAAQS anywhere within the nonattainment area during the period covered by the applicable plan.

(2) *Amendments to a Transportation Plan or Transportation Implementation Program*. Prior to approving any amendment to a transportation plan or program, the MPO shall first determine that the amendment does not substantially change the information provided under paragraph (d)(1)(i) of this section and does not change the findings in paragraph (d)(1)(ii) of this section with respect to the original plan or program.

(3) *Transportation Projects*. As part of any individual transportation project approval made by the MPO, the MPO shall determine whether the project conforms to the applicable implementation plan using the following procedure:

(i) For projects from a plan and TIP that has been found to conform under procedures in paragraph (d)(1) of this section within the last three years or from a Plan or TIP amendment that has been found to conform under procedures in paragraph (d)(2) of this section in the past three years, the MPO shall document as part of the approval document:

(A) the TIP project number;

(B) whether the project is an exempt project as defined in paragraph (e) of this section; and

(C) whether the design and scope of the project has changed significantly from the design and scope of the

project as described in the conforming TIP:

(*1*) If the design and scope of the project has not changed significantly, the MPO may find the project conforming; or

(*2*) If the design and scope of the project has changed significantly or the design and scope of the project could not be determined from the TIP, the MPO shall use the procedures in paragraph (d)(3)(ii) of this section to determine if the project conforms to the applicable implementation plan.

(ii) For projects not exempted under paragraph (e) of this section and not in a plan or a TIP that has been found to conform under procedures in paragraph (d)(1) of this section within the last three years:

(A) *Documentation*. The MPO shall document as part of the approval document for each such project:

(*1*) the disaggregated population and employment projections, to the extent they are used in

(*i*) the applicable plan, and

(*ii*) designing and scoping the project;

(*2*) the levels of vehicle trips, vehicle miles traveled, and congestion that are

(*i*) assumed in the applicable plan, and

(*ii*) expected to result over the period covered by the applicable plan from the construction of the project considering any growth likely to result from the project;

(*3*) for each transportation control measure in the applicable plan likely to be affected by the project:

(*i*) its implementation schedule and expected emission reduction effectiveness from the applicable plan,

(*ii*) its current implementation status and, if feasible, its current effectiveness, and

(*iii*) any actions as part of the project which may beneficially or adversely affect the implementation and/or effectiveness of the TCM;

(*4*) CO emission levels which will result from the project over the period covered by the applicable plan considering any growth likely to result from the project; and

(*5*) ambient CO concentration levels which will result from the project over the period covered by the applicable plan considering any growth likely to result from the project.

(B) *Findings*. Prior to approving any transportation project, the MPO shall determine if the project conforms to the applicable implementation plan. In making this determination, the MPO shall make and support the following findings for each project using the information documented in paragraph (d)(2)(ii)(A) of this section:

(*1*) that the project will provide for the implementation of TCMs affected by the project on the schedule set forth in the applicable plan;

(*2*) that CO emission levels, microscale and regional, resulting from the implementation of the project during the period covered by the applicable plan will not delay attainment or any required interim emission reductions and/or interfere with maintenance of the CO NAAQS in an area substantially affected by the project;

(*3*) that the project will not cause or contribute to a violation of the CO NAAQS during the period covered by the applicable plan near the project; and

(*4*) that the projected emissions from the project, when considered together with emissions projected for the conforming plan and program within the nonattainment area, do not cause the plan and program to exceed the emission reduction projections and schedules assigned to such plans and programs in the applicable implementation plan.

(e) *Exempt Projects*. An individual project is exempt from the requirements of paragraph (d) of this section if it is:

(1) located completely outside the nonattainment area;

(2) a safety project which is included in the statewide safety improvement program, will not alter the functional traffic capacity or capability of the facility being improved, and does not adversely affect the TCMs in the applicable plan;

(3) a transportation control measure from the approved applicable plan; or

(4) a mass transit project funded under the Urban Mass Transportation Act, 49 U.S.C.

[56 FR 5485, Feb. 11, 1991]

§ 52.139 [Reserved]

§ 52.140 Monitoring transportation trends.

(a) This section is applicable to the State of Arizona.

(b) In order to assure the effectiveness of the inspection and maintenance program and the retrofit devices required under the Arizona implementation plan, the State shall monitor the actual per-vehicle emissions reductions occurring as a result of such measures. All data obtained from such monitoring shall be included in the quarterly report submitted to the Administrator by the State in accordance with § 58.35 of this chapter. The first quarterly report shall cover the period January 1 to March 31, 1976.

(c) In order to assure the effective implementation of §§ 52.137, 52.138, and 52.139, the State shall monitor vehicle miles traveled and average vehicle speeds for each area in which such sections are in effect and during such time periods as may be appropriate to evaluate the effectiveness of such a program. All data obtained from such monitoring shall be included in the quarterly report submitted to the Administrator by the State of Arizona in accordance with § 58.35 of this chapter. The first quarterly report shall cover the period from July 1 to September 30, 1974. The vehicle miles traveled and vehicle speed data shall be collected on a monthly basis and submitted in a format similar to Table 1.

TABLE 1

Time period _____

Affected area _____

Roadway type	VMT or average vehicle speed	
	Vehicle type (1)	Vehicle type (2)[1]
Freeway.		
Arterial.		
Collector.		
Local.		

[1] Continue with other vehicle types as appropriate.

(d) No later than March 1, 1974, the State shall submit to the Administrator a compliance schedule to implement this section. The program description shall include the following:

(1) The agency or agencies responsible for conducting, overseeing, and maintaining the monitoring program.

(2) The administrative procedures to be used.

(3) A description of the methods to be used to collect the emission data, VMT data, and vehicle speed data; a description of the geographical area to which the data apply; identification of the location at which the data will be collected; and the time periods during which the data will be collected.

(e) The quarterly reports specified in paragraphs (b) and (c) of this section shall be submitted to the Administrator through the Regional Office, and shall be due within 45 days after the end of each reporting period.

[38 FR 33376, Dec. 3, 1973, as amended at 39 FR 32113, Sept. 5, 1974; 44 FR 27571, May 10, 1979]

§ 52.141 [Reserved]

§ 52.142 Federal Implementation Plan for Tri-Cities landfill, Salt River Pima-Maricopa Indian Community.

The Federal Implementation Plan regulating emissions from an Energy Project at the Tri-Cities landfill located on the Salt River Pima-Maricopa Indian Community near Phoenix, Arizona is codified at 40 CFR 49.22.

[64 FR 65664, Nov. 23, 1999]

§ 52.143 [Reserved]

§ 52.144 Significant deterioration of air quality.

(a) The requirements of sections 160 through 165 of the Clean Act are not met, since the plan as it applies to stationary sources under the jurisdiction of the Pima County Health Department and the Maricopa County Department of Health Services and stationary sources locating on Indian lands does not include approvable procedures for preventing the significant deterioration of air quality.

(b) Regulation for preventing significant deterioration of air quality. The provisions of § 52.21 except paragraph (a)(1) are hereby incorporated and made a part of the applicable State plan for the State of Arizona for that portion applicable to the Pima County Health Department and the Maricopa

County Department of Health Services and sources locating on Indian lands.

(c) The requirements of sections 160 through 165 of the Clean Air Act are met as they apply to stationary sources under the jurisdiction of the Arizona Department of Environmental Quality (ADEQ), except with respect to emissions of greenhouse gases (GHGs) (as defined in § 52.21(b)(49)(i)). Therefore, the provisions of § 52.21, except paragraph (a)(1) of this section, for GHGs are hereby made a part of the plan for stationary sources under the jurisdiction of ADEQ as it applies to the stationary sources described in § 52.21(b)(49)(iv).

[48 FR 19879, May 3, 1983, as amended at 68 FR 11321, Mar. 10, 2003; 68 FR 74488, Dec. 24, 2003; 83 FR 19637, May 4, 2018]

§ 52.145 Visibility protection.

(a) The requirements of section 169A of the Clean Air Act are not met, because the plan does not include approvable procedures for protection of visibility in mandatory Class I Federal areas.

(b) Regulations for visibility monitoring and new source review. The provisions of §§ 52.27 and 52.28 are hereby incorporated and made part of the applicable plan for the State of Arizona.

(c) [Reserved]

(d) This paragraph is applicable to the fossil fuel-fired, steam-generating equipment designated as Units 1, 2, and 3 at the Navajo Generating Station in the Northern Arizona Intrastate Air Quality Control Region (§ 81.270 of this chapter).

(1) *Definitions.*

Administrator means the Administrator of EPA or his/her designee.

Affected Unit(s) means the steam-generating unit(s) at the Navajo Generating Station, all of which are subject to the emission limitation in paragraph (d)(2) of this section, that has accumulated at least 365 boiler operating days since the passage of the date defined in paragraph (d)(6) of this section applicable to it.

Boiler Operating Day for each of the boiler units at the Navajo Generating Station is defined as a 24-hour calendar day (the period of time between 12:01 a.m. and 12:00 midnight in Page, Arizona) during which coal is combusted in that unit for the entire 24 hours.

Owner or Operator means the owner, participant in, or operator of the Navajo Generating Station to which this paragraph is applicable.

Unit-Week of Maintenance means a period of 7 days during which a fossil fuel-fired steam-generating unit is under repair, and no coal is combusted in the unit.

(2) *Emission limitation.* No owner or operator shall discharge or cause the discharge of sulfur oxides into the atmosphere in excess of 42 ng/J [0.10 pound per million British thermal units (lb/MMBtu)] heat input.

(3) *Compliance determination.* Until at least one unit qualifies as an affected unit, no compliance determination is appropriate. As each unit qualifies for treatment as an affected unit, it shall be included in the compliance determination. Compliance with this emission limit shall be determined daily on a plant-wide rolling annual basis as follows:

(i) For each boiler operating day at each steam generating unit subject to the emission limitation in paragraph (d)(2) of this section, the owner or operator shall record the unit's hourly SO_2 emissions using the data from the continuous emission monitoring systems, [required in paragraph (d)(4) of this section] and the daily electric energy generated by the unit (in megawatt-hours) as measured by the megawatt-hour meter for the unit.

(ii) Compute the average daily SO_2 emission rate in ng/J (lb/MMBtu) following the procedures set out in method 19, appendix A, 40 CFR part 60 in effect on October 3, 1991.

(iii) For each boiler operating day for each affected unit, calculate the product of the daily SO_2 emission rate (computed according to paragraph (d)(3)(ii) of this section) and the daily electric energy generated (recorded according to paragraph (d)(3)(i) of this section) for each unit.

(iv) For each affected unit, identify the previous 365 boiler operating days to be used in the compliance determination. Except as provided in paragraphs (d)(9) and (d)(10) of this section, all of the immediately preceding 365

boiler operating days will be used for compliance determinations.

(v) Sum, for all affected units, the products of the daily SO_2 emission rate-electric energy generated (as calculated according to paragraph (d)(3)(iii) of this section) for the boiler operating days identified in paragraph (d)(3)(iv) of this section.

(vi) Sum, for all affected units, the daily electric energy generated (recorded according to paragraph (d)(3)(i) of this section) for the boiler operating days identified in paragraph (d)(3)(iv) of this section.

(vii) Calculate the weighted plant-wide annual average SO_2 emission rate by dividing the sum of the products determined according to paragraph (d)(3)(v) of this section by the sum of the electric energy generated determined according to paragraph (d)(3)(vi) of this section.

(viii) The weighted plant-wide annual average SO_2 emission rate shall be used to determine compliance with the emission limitation in paragraph (d)(2) of this section.

(4) *Continuous emission monitoring.* The owner or operator shall install, maintain, and operate continuous emission monitoring systems to determine compliance with the emission limitation in paragraph (d)(2) of this section as calculated in paragraph (d)(3) of this section. This equipment shall meet the specifications in appendix B of 40 CFR part 60 in effect on October 3, 1991. The owner or operator shall comply with the quality assurance procedures for continuous emission monitoring systems found in appendix F of 40 CFR part 60 in effect on October 3, 1991.

(5) *Reporting requirements.* For each steam generating unit subject to the emission limitation in paragraph (d)(2) of this section, the owner or operator:

(i) Shall furnish the Administrator written notification of the SO_2, oxygen, and carbon dioxide emissions according to the procedures found in 40 CFR § 60.7 in effect on October 3, 1991.

(ii) Shall furnish the Administrator written notification of the daily electric energy generated in megawatt-hours.

(iii) Shall maintain records according to the procedures in 40 CFR 60.7 in effect on October 3, 1991.

(iv) Shall notify the Administrator by telephone or in writing within one business day of any outage of the control system needed for compliance with the emission limitation in paragraph (d)(2) of this section and shall submit a follow-up written report within 30 days of the repairs stating how the repairs were accomplished and justifying the amount of time taken for the repairs.

(6) *Compliance dates.* The requirements of this paragraph shall be applicable to one unit at the Navajo Generating Station beginning November 19, 1997, to two units beginning November 19, 1998, and to all units beginning on August 19, 1999.

(7) *Schedule of compliance.* The owner or operator shall take the following actions by the dates specified:

(i) By June 1, 1992, award binding contracts to an architectural and engineering firm to design and procure the control system needed for compliance with the emission limitation in paragraph (d)(2) of this section.

(ii) By January 1, 1995, initiate on-site construction or installation of a control system for the first unit.

(iii) By May 1, 1997, initiate start-up testing of the control system for the first unit.

(iv) By May 1, 1998, initiate start-up testing of the control system for the second unit.

(v) By February 1, 1999, initiate start-up testing of the control system for the third unit.

The interim deadlines will be extended if the owner or operators can demonstrate to the Administrator that compliance with the deadlines in paragraph (d)(6) of this section will not be affected.

(8) *Reporting on compliance schedule.* Within 30 days after the specified date for each deadline in the schedule of compliance (paragraph (d)(7) of this section, the owner or operator shall notify the Administrator in writing whether the deadline was met. If it was not met the notice shall include an explanation why it was not met and the steps which shall be taken to ensure future deadlines will be met.

(9) *Exclusion for equipment failure during initial operation*. For each unit, in determining compliance for the first year that such unit is required to meet the emission limitation in paragraph (d)(2) of this section, periods during which one of the following conditions are met shall be excluded:

(i) Equipment or systems do not meet designer's or manufacturer's performance expectations.

(ii) Field installation including engineering or construction precludes equipment or systems from performing as designed.

The periods to be excluded shall be determined by the Administrator based on the periodic reports of compliance with the emission limitation in paragraph (d)(2) of this section which shall identify the times proposed for exclusion and provide the reasons for the exclusion, including the reasons for the control system outage. The report also shall describe the actions taken to avoid the outage, to minimize its duration, and to reduce SO_2 emissions at the plant to the extent practicable while the control system was not fully operational. Whenever the time to be excluded exceeds a cumulative total of 30 days for any control system for any affected unit, the owner or operators shall submit a report within 15 days addressing the history of and prognosis for the performance of the control system.

(10) *Exclusion for catastrophic failure*. In addition to the exclusion of periods allowed in paragraph (d)(9) of this section, any periods of emissions from an affected unit for which the Administrator finds that the control equipment or system for such unit is out of service because of catastrophic failure of the control system which occurred for reasons beyond the control of the owner or operators and could not have been prevented by good engineering practices will be excluded from the compliance determination. Events which are the consequence of lack of appropriate maintenance or of intentional or negligent conduct or omissions of the owner or operators or the control system design, construction, or operating contractors do not constitute catastrophic failure.

(11) *Equipment operation*. The owner or operator shall optimally operate all equipment or systems needed to comply with the requirements of this paragraph consistent with good engineering practices to keep emissions at or below the emission limitation in paragraph (d)(2) of this section, and following outages of any control equipment or systems the control equipment or system will be returned to full operation as expeditiously as practicable.

(12) *Maintenance scheduling*. On March 16 of each year starting in 1993, the owner or operator shall prepare and submit to the Administrator a long-term maintenance plan for the Navajo Generating Station which accommodates the maintenance requirements for the other generating facilities on the Navajo Generating Station grid covering the period from March 16 to March 15 of the next year and showing at least 6 unit-weeks of maintenance for the Navajo Generating Station during the November 1 to March 15 period, except as provided in paragraph (d)(13) of this section. This plan shall be developed consistent with the criteria established by the Western States Coordinating Council of the North American Electric Reliability Council to ensure an adequate reserve margin of electric generating capacity. At the time that a plan is transmitted to the Administrator, the owner or operator shall notify the Administrator in writing if less than the full scheduled unit-weeks of maintenance were conducted for the period covered by the previous plan and shall furnish a written report stating how that year qualified for one of the exceptions identified in paragraph (d)(13) of this section.

(13) *Exceptions for maintenance scheduling*. The owner or operator shall conduct a full 6 unit-weeks of maintenance in accordance with the plan required in paragraph (d)(12) of this section unless the owner or operator can demonstrate to the satisfaction of the Administrator that a full 6 unit-weeks of maintenance during the November 1 to March 15 period should not be required because of the following:

(i) There is no need for 6 unit-weeks of scheduled periodic maintenance in the year covered by the plan;

(ii) The reserve margin on any electrical system served by the Navajo Generating Station would fall to an inadequate level, as defined by the criteria referred to in paragraph (d)(12) of this section.

(iii) The cost of compliance with this requirement would be excessive. The cost of compliance would be excessive when the economic savings to the owner or operator of moving maintenance out of the November 1 to March 15 period exceeds $50,000 per unit-day of maintenance moved.

(iv) A major forced outage at a unit occurs outside of the November 1 to March 15 period, and necessary periodic maintenance occurs during the period of forced outage.

If the Administrator determines that a full 6 unit-weeks of maintenance during the November 1 to March 15 period should not be required, the owner or operator shall nevertheless conduct that amount of scheduled maintenance that is not precluded by the Administrator. Generally, the owner or operator shall make best efforts to conduct as much scheduled maintenance as practicable during the November 1 to March 15 period.

(e) *Approval.* On February 28, 2011, the Arizona Department of Environmental Quality submitted the ''Arizona State Implementation Plan, Regional Haze Under Section 308 of the Federal Regional Haze Rule'' (''Arizona Regional Haze SIP'').

(1) [Reserved]

(2) The following portions of the Arizona Regional Haze SIP are disapproved because they do not meet the applicable requirements of Clean Air Act sections 169A and 169B and the Regional Haze Rule in 40 CFR 51.301 through 51.308:

(i) The determination that Unit I4 at TEP's Irvington [Sundt] Generating Station is not BART-eligible;

(ii) The portions of the long-term strategy for regional haze related to emission reductions for out-of-state Class I areas, emissions limitations and schedules for compliance to achieve the reasonable progress goal and enforceability of emissions limitations and control measures.

(f) [Reserved]

(g) On May 3, 2013, the Arizona Department of Environmental Quality (ADEQ) submitted the ''Arizona State Implementation Plan Revision, Regional Haze Under Section 308 of the Federal Regional Haze Rule'' (''Arizona Regional Haze SIP Supplement'').

(1) The following portions of the Arizona Regional Haze SIP Supplement are disapproved because they do not meet the applicable requirements of Clean Air Act sections 169A and 169B and the Regional Haze Rule in 40 CFR 51.301 through 51.308:

(i) The determination that the Chemical Lime Company's Nelson Lime Plant is not subject-to-BART;

(ii) The determination that the Freeport McMoRan Miami Inc (FMMI) Smelter is not subject to BART for NO_X;

(iii) The determination that existing controls constitute BART for SO_2 at the Freeport McMoRan Miami Inc (FMMI) Smelter;

(iv) The determination that the ASARCO Hayden smelter is not subject to BART for NO_X and PM_{10};

(v) The determination that existing controls constitute BART for SO_2 at ASARCO Hayden Smelter;

(vi) The reasonable progress goals for the first planning period;

(vii) The determination that no additional controls for point sources of NO_X are reasonable for the first planning period; and

(viii) The determination that no additional controls for area sources of NO_X and SO_2 are reasonable for the first planning period.

(2) [Reserved]

(h) *Disapproval.* The following portions of the Arizona SIP are disapproved because they do not meet the applicable requirements of Clean Air Act sections 169A and 169B and the Regional Haze Rule at 40 CFR 51.309:

(1) Regional Haze State Implementation Plan for the State of Arizona (''Arizona 309 Regional Haze SIP'') submitted by the Arizona Department of Environmental Quality on December 23, 2003, with the exception of Chapter 5 (Strategy to Address Reasonably Attributable Visibility Impairment (RAVI)) and Appendix A–5 (Attributable Impairment).

(2) The Arizona Regional Haze State Implementation Plan Revision submitted by the Arizona Department of Environmental Quality on December 31, 2004, with the exception of the provisions already approved at 40 CFR 52.120(c)(131).

(3) Letter from Stephen A. Owens, Director, Arizona Department of Environmental Quality, dated December 24, 2008 re: Submittal of Arizona Regional Haze State Implementation Plan.

(i) *Source-specific federal implementation plan for regional haze at Nelson Lime Plant*— (1) *Applicability*. This paragraph (i) applies to the owner/operator of the lime kilns designated as Kiln 1 and Kiln 2 at the Nelson Lime Plant located in Yavapai County, Arizona.

(2) *Definitions*. Terms not defined in this paragraph (i)(2) shall have the meaning given them in the Clean Air Act or EPA's regulations implementing the Clean Air Act. For purposes of this paragraph (i):

Ammonia injection shall include any of the following: Anhydrous ammonia, aqueous ammonia, or urea injection.

Continuous emission monitoring system or CEMS means the equipment required by this section to sample, analyze, measure, and provide, by means of readings recorded at least once every 15 minutes (using an automated data acquisition and handling system (DAHS)), a permanent record of NO_X emissions, SO_2 emissions, diluent, and stack gas volumetric flow rate.

Kiln means either of the kilns identified in paragraph (i)(1) of this section.

Kiln 1 means lime kiln 1, as identified in paragraph (i)(1) of this section.

Kiln 2 means lime kiln 2, as identified in paragraph (i)(1) of this section.

Kiln operating day means a 24-hour period between 12 midnight and the following midnight during which there is operation of Kiln 1, Kiln 2, or both kilns at any time.

Kiln operation means any period when any raw materials are fed into the Kiln or any period when any combustion is occurring or fuel is being fired in the Kiln.

Lime product means the product of the lime-kiln calcination process, including calcitic lime, dolomitic lime, and dead-burned dolomite.

NO_X means oxides of nitrogen.

Owner/operator means any person who owns or who operates, controls, or supervises a kiln identified in paragraph (i)(1) of this section.

SO_2 means sulfur dioxide.

(3) *Emission limitations*. (i) The owner/operator of the kilns identified in paragraph (i)(1) of this section shall not emit or cause to be emitted pollutants in excess of the following limitations in pounds of pollutant per ton of lime product (lb/ton), from any kiln. Each emission limit shall be based on a 12-month rolling basis.

POLLUTANT EMISSION LIMIT

Kiln ID	NO_X	SO_2
Kiln 1	3.80	9.32
Kiln 2	2.61	9.73

(ii) The owner/operator of the kilns identified in paragraph (i)(1) of this section shall not emit or cause to be emitted pollutants in excess of 3.27 tons of NO_X per day and 10.10 tons of SO_2 per day, combined from both kilns, based on a rolling 30-kiln-operating-day basis.

(4) *Compliance dates*. (i) The owner/operator of each kiln shall comply with the NO_X emission limitations and other NO_X -related requirements of this paragraph (i) no later than September 4, 2017.

(ii) The owner/operator of each kiln shall comply with the SO_2 emission limitations and other SO_2 -related requirements of this paragraph (i) no later than March 3, 2016.

(5) [Reserved]

(6) *Compliance determination*—(i) *Continuous emission monitoring system*. At all times after the compliance dates specified in paragraph (i)(4) of this section, the owner/operator of kilns 1 and 2 shall maintain, calibrate, and operate a CEMS, in full compliance with the requirements found at 40 CFR 60.13 and 40 CFR part 60, appendices B and F, to accurately measure diluent, stack gas volumetric flow rate, and concentration by volume of NO_X and SO_2 emissions into the atmosphere from kilns 1 and 2. The CEMS shall be used by the owner/operator to determine compliance with the emission limitations in

paragraph (i)(3) of this section, in combination with data on actual lime production. The owner/operator must operate the monitoring system and collect data at all required intervals at all times that an affected kiln is operating, except for periods of monitoring system malfunctions, repairs associated with monitoring system malfunctions, and required monitoring system quality assurance or quality control activities (including, as applicable, calibration checks and required zero and span adjustments).

(ii) *Ammonia consumption monitoring.* Upon and after the completion of installation of ammonia injection on a kiln, the owner or operator shall install, and thereafter maintain and operate, instrumentation to continuously monitor and record levels of ammonia consumption for that kiln.

(iii) *Compliance determination for lb per ton NO_X limit.* Compliance with the NO_X emission limits described in paragraph (i)(3)(i) of this section shall be determined based on a rolling 12-month basis. The 12-month rolling NO_X emission rate for each kiln shall be calculated within 30 days following the end of each calendar month in accordance with the following procedure: Step one, sum the hourly pounds of NO_X emitted for the month just completed and the eleven (11) months preceding the month just completed to calculate the total pounds of NO_X emitted over the most recent twelve (12) month period for that kiln; Step two, sum the total lime product, in tons, produced during the month just completed and the eleven (11) months preceding the month just completed to calculate the total lime product produced over the most recent twelve (12) month period for that kiln; Step three, divide the total amount of NO_X calculated from Step one by the total lime product calculated from Step two to calculate the 12-month rolling NO_X emission rate for that kiln. Each 12-month rolling NO_X emission rate shall include all emissions and all lime product that occur during all periods within the 12-month period, including emissions from startup, shutdown, and malfunction.

(iv) *Compliance determination for lb per ton SO_2 limit.* Compliance with the SO_2 emission limits described in paragraph (i)(3)(i) of this section shall be determined based on a rolling 12-month basis. The 12-month rolling SO_2 emission rate for each kiln shall be calculated within 30 days following the end of each calendar month in accordance with the following procedure: Step one, sum the hourly pounds of SO_2 emitted for the month just completed and the eleven (11) months preceding the month just completed to calculate the total pounds of SO_2 emitted over the most recent twelve (12) month period for that kiln; Step two, sum the total lime product, in tons, produced during the month just completed and the eleven (11) months preceding the month just completed to calculate the total lime product produced over the most recent twelve (12) month period for that kiln; Step three, divide the total amount of SO_2 calculated from Step one by the total lime product calculated from Step two to calculate the 12-month rolling SO_2 emission rate for that kiln. Each 12-month rolling SO_2 emission rate shall include all emissions and all lime product that occur during all periods within the 12-month period, including emissions from startup, shutdown, and malfunction.

(v) *Compliance determination for ton per day NO_X limit.* Compliance with the NO_X emission limit described in paragraph (i)(3)(ii) of this section shall be determined based on a rolling 30-kiln-operating-day basis. The rolling 30-kiln operating day NO_X emission rate for the kilns shall be calculated for each kiln operating day in accordance with the following procedure: Step one, sum the hourly pounds of NO_X emitted from both kilns for the current kiln operating day and the preceding twenty-nine (29) kiln-operating-day period for both kilns; Step two, divide the total pounds of NO_X calculated from Step one by two thousand (2,000) to calculate the total tons of NO_X; Step three, divide the total tons of NO_X calculated from Step two by thirty (30) to calculate the rolling 30-kiln operating day NO_X emission rate for both kilns. Each rolling 30-kiln operating day NO_X emission rate shall include all emissions that occur from both kilns during all periods within any kiln operating

day, including emissions from startup, shutdown, and malfunction.

(vi) *Compliance determination for ton per day SO_2 limit*. Compliance with the SO_2 emission limit described in paragraph (i)(3)(ii) of this section shall be determined based on a rolling 30-kiln-operating-day basis. The rolling 30-kiln operating day SO_2 emission rate for the kilns shall be calculated for each kiln operating day in accordance with the following procedure: Step one, sum the hourly pounds of SO_2 emitted from both kilns for the current kiln operating day and the preceding twenty-nine (29) kiln operating days, to calculate the total pounds of SO_2 emitted over the most recent thirty (30) kiln operating day period for both kilns; Step two, divide the total pounds of SO_2 calculated from Step one by two thousand (2,000) to calculate the total tons of SO_2; Step three, divide the total tons of SO_2 calculated from Step two by thirty (30) to calculate the rolling 30-kiln operating day SO_2 emission rate for both kilns. Each rolling 30-kiln operating day SO_2 emission rate shall include all emissions that occur from both kilns during all periods within any kiln operating day, including emissions from startup, shutdown, and malfunction.

(7) *Recordkeeping*. The owner/operator shall maintain the following records for at least five years:

(i) All CEMS data, including the date, place, and time of sampling or measurement; parameters sampled or measured; and results.

(ii) All records of lime production.

(iii) Monthly rolling 12-month emission rates of NO_X and SO_2, calculated in accordance with paragraphs (i)(6)(iii) and (iv) of this section.

(iv) Daily rolling 30-kiln operating day emission rates of NO_X and SO_2 calculated in accordance with paragraphs (i)(6)(v) and (vi) of this section.

(v) Records of quality assurance and quality control activities for emissions measuring systems including, but not limited to, any records specified by 40 CFR part 60, appendix F, Procedure 1, as well as the following:

(A) The occurrence and duration of any startup, shutdown, or malfunction, performance testing, evaluations, calibrations, checks, adjustments maintenance, duration of any periods during which a CEMS or COMS is inoperative, and corresponding emission measurements.

(B) Date, place, and time of measurement or monitoring equipment maintenance activity;

(C) Operating conditions at the time of measurement or monitoring equipment maintenance activity;

(D) Date, place, name of company or entity that performed the measurement or monitoring equipment maintenance activity and the methods used; and

(E) Results of the measurement or monitoring equipment maintenance.

(vi) Records of ammonia consumption, as recorded by the instrumentation required in paragraph (i)(6)(ii) of this section.

(vii) Records of all major maintenance activities conducted on emission units, air pollution control equipment, CEMS, and lime production measurement devices.

(viii) All other records specified by 40 CFR part 60, appendix F, Procedure 1.

(8) *Reporting*. All reports required under this section shall be submitted by the owner/operator to the Director, Enforcement Division, U.S. Environmental Protection Agency, Region 9, electronically via email to *aeo_r9@epa.gov*. Any data that are required under this section shall be submitted in Excel format. Reports required under paragraphs (i)(8)(iii) through (v) of this section shall be submitted within 30 days after the applicable compliance date(s) in paragraph (i)(4) of this section and at least semiannually thereafter, within 30 days after the end of a semiannual period. The owner/operator may submit reports more frequently than semiannually for the purposes of synchronizing reports required under this section with other reporting requirements, such as the title V monitoring report required by 40 CFR 70.6(a)(3)(iii)(A), but at no point shall the duration of a semiannual period exceed six months.

(i) Prior to commencing construction of the ammonia injection system, the owner/operator shall submit to EPA a summary report of the design of the SNCR system. Elements of this summary report shall include: Reagent

type, description of the locations selected for reagent injection, reagent injection rate (expressed as a molar ratio of reagent to NO_X), equipment list, equipment arrangement, and a summary of kiln characteristics that were relied upon as the design basis for the SNCR system.

(ii) By October 3, 2017, the owner/operator shall submit to EPA a summary of any process improvement or debugging activities that were performed on the SNCR system. Elements of this summary report shall include: a description of each process adjustment performed on the SNCR system, a discussion of whether the adjustment affected NO_X emission rate (including CEMS data that may have been recorded while the adjustment was in progress), a description of the range (if applicable) over which the adjustment was examined, and a discussion of how the adjustment will be reflected or accounted for in kiln operating practices. In addition, to the extent that the owner/operator evaluates the impact of varying reagent injection rate on NO_X emissions, the owner/operator shall include the following information: the range of reagent injection rates evaluated (expressed as a molar ratio of reagent to average NO_X concentration), reagent injection rate, average NO_X concentration, lime production rate, kiln flue gas temperature, and the presence of any detached plumes from the kiln exhaust.

(iii) The owner/operator shall submit a report that lists the daily rolling 30-kiln operating day emission rates for NO_X and SO_2, calculated in accordance with paragraphs (i)(6)(iii) and (iv) of this section.

(iv) The owner/operator shall submit a report that lists the monthly rolling 12-month emission rates for NO_X and SO_2, calculated in accordance with paragraphs (i)(6)(v) and (vi) of this section.

(v) The owner/operator shall submit excess emissions reports for NO_X and SO_2 limits. Excess emissions means emissions that exceed any of the emissions limits specified in paragraph (i)(3) of this section. The reports shall include the magnitude, date(s), and duration of each period of excess emissions; specific identification of each period of excess emissions that occurs during startups, shutdowns, and malfunctions of the kiln; the nature and cause of any malfunction (if known); and the corrective action taken or preventative measures adopted.

(vi) The owner/operator shall submit a summary of CEMS operation, to include dates and duration of each period during which the CEMS was inoperative (except for zero and span adjustments and calibration checks), reason(s) why the CEMS was inoperative and steps taken to prevent recurrence, and any CEMS repairs or adjustments.

(vii) The owner/operator shall submit results of all CEMS performance tests required by 40 CFR part 60, Appendix F, Procedure 1 (Relative Accuracy Test Audits, Relative Accuracy Audits, and Cylinder Gas Audits).

(viii) When no excess emissions have occurred or the CEMS has not been inoperative, repaired, or adjusted during the reporting period, the owner/operator shall state such information in the semiannual report.

(9) *Notifications.* All notifications required under this section shall be submitted by the owner/operator to the Director, Enforcement Division (Mail Code ENF–2–1), U.S. Environmental Protection Agency, Region 9, 75 Hawthorne Street, San Francisco, California 94105–3901.

(i) The owner/operator shall submit notification of commencement of construction of any equipment which is being constructed to comply with the NO_X emission limits in paragraph (i)(3) of this section.

(ii) The owner/operator shall submit semiannual progress reports on construction of any such equipment.

(iii) The owner/operator shall submit notification of initial startup of any such equipment.

(10) *Equipment operations.* (i) At all times, including periods of startup, shutdown, and malfunction, the owner/operator shall, to the extent practicable, maintain and operate the kilns, including associated air pollution control equipment, in a manner consistent with good air pollution control practices for minimizing emissions. Pollution control equipment shall be designed and capable of operating properly to minimize emissions

during all expected operating conditions. Determination of whether acceptable operating and maintenance procedures are being used will be based on information available to the Regional Administrator, which may include, but is not limited to, monitoring results, review of operating and maintenance procedures, and inspection of the kilns.

(ii) After completion of installation of ammonia injection on a kiln, the owner/operator shall inject sufficient ammonia to achieve compliance with the NO_X emission limits from paragraph (i)(3) of this section for that kiln while preventing excessive ammonia emissions.

(11) *Enforcement*. Notwithstanding any other provision in this implementation plan, any credible evidence or information relevant as to whether the kiln would have been in compliance with applicable requirements if the appropriate performance or compliance test had been performed can be used to establish whether or not the owner/operator has violated or is in violation of any standard or applicable emission limit in the plan.

(j) *Source-specific federal implementation plan for regional haze at H. Wilson Sundt Generating Station*—(1) *Applicability*. This paragraph (j) applies to the owner/operator of the electricity generating unit (EGU) designated as Unit I4 at the H. Wilson Sundt Generating Station located in Tucson, Pima County, Arizona.

(2) *Definitions*. Terms not defined in this paragraph (j)(2) shall have the meaning given them in the Clean Air Act or EPA's regulations implementing the Clean Air Act. For purposes of this paragraph (j):

Ammonia injection shall include any of the following: Anhydrous ammonia, aqueous ammonia, or urea injection.

Boiler operating day means a 24-hour period between 12 midnight and the following midnight during which any fuel is combusted at any time in the unit.

Continuous emission monitoring system or CEMS means the equipment required by 40 CFR part 75 and this paragraph (j).

MMBtu means one million British thermal units.

Natural gas means a naturally occurring fluid mixture of hydrocarbons as defined in 40 CFR 72.2.

NO_X means oxides of nitrogen.

Owner/operator means any person who owns or who operates, controls, or supervises the EGU identified in paragraph (j)(1) of this section.*PM* means total filterable particulate matter.

PM_{10} means total particulate matter less than 10 microns in diameter.

SO_2 means sulfur dioxide.

Unit means the EGU identified paragraph (j)(1) of this section.

(3) *Emission limitations*. The owner/operator of the unit shall not emit or cause to be emitted pollutants in excess of the following limitations, in pounds of pollutant per million British thermal units (lb/MMBtu), from the subject unit.

Pollutant	Pollutant emission limit
NO_X	0.36
PM	0.030
SO_2	0.23

(4) *Alternative emission limitations*. The owner/operator of the unit may choose to comply with the following limitations in lieu of the emission limitations listed in paragraph (j)(3) of this section.

(i) The owner/operator of the unit shall combust only natural gas or natural gas combined with landfill gas in the subject unit.

(ii) The owner/operator of the unit shall not emit or cause to be emitted pollutants in excess of the following limitations, in pounds of pollutant per million British thermal units (lb/MMBtu), from the subject unit.

Pollutant	Pollutant emission limit
NO_X	0.25
PM_{10}	0.010
SO_2	0.057

(iii) If the results of the initial performance test conducted in accordance with paragraph (j)(8)(iv) of this section show PM_{10} emissions greater than the limit in paragraph (j)(4)(ii) of this section, the owner/operator may elect to comply with an emission limit equal to the result of the initial performance

test, in lieu of the PM_{10} emission limit in paragraph (j)(4)(ii).

(5) *Compliance dates.* (i) The owner/operator of the unit subject to this paragraph (j)(5) shall comply with the NO_X and SO_2 emission limitations of paragraph (j)(3) of this section no later than September 4, 2017.

(ii) The owner/operator of the unit subject to this paragraph (j)(5) shall comply with the PM emission limitation of paragraph (j)(3) of this section no later than April 16, 2015.

(6) *Alternative compliance dates.* If the owner/operator chooses to comply with paragraph (j)(4) of this section in lieu of paragraph (j)(3) of this section, the owner/operator of the unit shall comply with the NO_X, SO_2, and PM_{10} emission limitations of paragraph (j)(4) of this section no later than December 31, 2017.

(7) *Compliance determination*—(i) *Continuous emission monitoring system.* (A) At all times after the compliance date specified in paragraph (j)(5)(i) of this section, the owner/operator of the unit shall maintain, calibrate, and operate CEMS, in full compliance with the requirements found at 40 CFR part 75, to accurately measure SO_2, NO_X, diluent, and stack gas volumetric flow rate from the unit. All valid CEMS hourly data shall be used to determine compliance with the emission limitations for NO_X and SO_2 in paragraph (j)(3) of this section. When the CEMS is out-of-control as defined by 40 CFR part 75, the CEMS data shall be treated as missing data and not used to calculate the emission average. Each required CEMS must obtain valid data for at least 90 percent of the unit operating hours, on an annual basis.

(B) The owner/operator of the unit shall comply with the quality assurance procedures for CEMS found in 40 CFR part 75. In addition to the requirements in part 75 of this chapter, relative accuracy test audits shall be calculated for both the NO_X and SO_2 pounds per hour measurement and the heat input measurement. The CEMS monitoring data shall not be bias adjusted. Calculations of relative accuracy for lb/hour of NO_X, SO_2, and heat input shall be performed each time the CEMS undergo relative accuracy testing.

(ii) *Ammonia consumption monitoring.* Upon and after the completion of installation of ammonia injection on the unit, the owner/operator shall install, and thereafter maintain and operate, instrumentation to continuously monitor and record levels of ammonia consumption for that unit.

(iii) *Compliance determination for NO_X.* Compliance with the NO_X emission limit described in paragraph (j)(3) of this section shall be determined based on a rolling 30 boiler-operating-day basis. The 30-boiler-operating-day rolling NO_X emission rate for the unit shall be calculated for each boiler operating day in accordance with the following procedure: Step one, sum the hourly pounds of NO_X emitted for the current boiler operating day and the preceding twenty-nine (29) boiler operating days to calculate the total pounds of NO_X emitted over the most recent thirty (30) boiler-operating-day period for that unit; Step two, sum the total heat input, in MMBtu, during the current boiler operating day and the preceding twenty-nine (29) boiler operating days to calculate the total heat input over the most recent thirty (30) boiler-operating-day period for that unit; Step three, divide the total amount of NO_X calculated from Step one by the total heat input calculated from Step two to calculate the rolling 30-boiler-operating-day NO_X emission rate, in pounds per MMBtu for that unit. Each rolling 30-boiler-operating-day NO_X emission rate shall include all emissions and all heat input that occur during all periods within any boiler operating day, including emissions from startup, shutdown, and malfunction. If a valid NO_X pounds per hour or heat input is not available for any hour for the unit, that heat input and NO_X pounds per hour shall not be used in the calculation of the rolling 30-boiler-operating-day emission rate.

(iv) *Compliance determination for SO_2.* Compliance with the SO_2 emission limit described in paragraph (j)(3) of this section shall be determined based on a rolling 30 boiler-operating-day basis. The rolling 30-boiler-operating-day SO_2 emission rate for the unit shall be calculated for each boiler operating day in accordance with the following procedure: Step one, sum the hourly

pounds of SO_2 emitted for the current boiler operating day and the preceding twenty-nine (29) boiler operating days to calculate the total pounds of SO_2 emitted over the most recent thirty (30) boiler-operating-day period for that unit; Step two, sum the total heat input, in MMBtu, during the current boiler operating day and the preceding twenty-nine (29) boiler operating days to calculate the total heat input over the most recent thirty (30) boiler-operating-day period for that unit; Step three, divide the total amount of SO_2 calculated from Step one by the total heat input calculated from Step two to calculate the rolling 30-boiler-operating-day SO_2 emission rate, in pounds per MMBtu for that unit. Each rolling 30-boiler-operating-day SO_2 emission rate shall include all emissions and all heat input that occur during all periods within any boiler operating day, including emissions from startup, shutdown, and malfunction. If a valid SO_2 pounds per hour or heat input is not available for any hour for the unit, that heat input and SO_2 pounds per hour shall not be used in the calculation of the rolling 30-boiler-operating-day emission rate.

(v) *Compliance determination for PM.* Compliance with the PM emission limit described in paragraph (j)(3) of this section shall be determined from annual performance stack tests. Within sixty (60) days either preceding or following the compliance deadline specified in paragraph (j)(5)(ii) of this section, and on at least an annual basis thereafter, the owner/operator of the unit shall conduct a stack test on the unit to measure PM using EPA Methods 1 through 5, in 40 CFR part 60, appendix A. Each test shall consist of three runs, with each run at least one hundred twenty (120) minutes in duration and each run collecting a minimum sample of sixty (60) dry standard cubic feet. Results shall be reported in lb/MMBtu using the calculation in 40 CFR part 60, appendix A, Method 19.

(8) *Alternative compliance determination.* If the owner/operator chooses to comply with the emission limits of paragraph (j)(4) of this section, this paragraph (j)(8) may be used in lieu of paragraph (j)(7) of this section to demonstrate compliance with the emission limits in paragraph (j)(4) of this section.

(i) *Continuous emission monitoring system.* (A) At all times after the compliance date specified in paragraph (j)(6) of this section, the owner/operator of the unit shall maintain, calibrate, and operate CEMS, in full compliance with the requirements found at 40 CFR part 75, to accurately measure NO_X, diluent, and stack gas volumetric flow rate from the unit. All valid CEMS hourly data shall be used to determine compliance with the emission limitation for NO_X in paragraph (j)(4) of this section. When the CEMS is out-of-control as defined by 40 CFR part 75, the CEMS data shall be treated as missing data and not used to calculate the emission average. Each required CEMS must obtain valid data for at least ninety (90) percent of the unit operating hours, on an annual basis.

(B) The owner/operator of the unit shall comply with the quality assurance procedures for CEMS found in 40 CFR part 75. In addition to these part 75 requirements, relative accuracy test audits shall be calculated for both the NO_X pounds per hour measurement and the heat input measurement. The CEMS monitoring data shall not be bias adjusted. Calculations of relative accuracy for lb/hr of NO_X and heat input shall be performed each time the CEMS undergo relative accuracy testing.

(ii) *Compliance determination for NO_X.* Compliance with the NO_X emission limit described in paragraph (j)(4) of this section shall be determined based on a rolling 30 boiler-operating-day basis. The rolling 30-boiler-operating-day NO_X emission rate for the unit shall be calculated for each boiler operating day in accordance with the following procedure: Step one, sum the hourly pounds of NO_X emitted for the current boiler operating day and the preceding twenty-nine (29) boiler-operating-days to calculate the total pounds of NO_X emitted over the most recent thirty (30) boiler-operating-day period for that unit; Step two, sum the total heat input, in MMBtu, during the current boiler operating day and the preceding twenty-nine (29) boiler-operating-days to calculate the total heat input over the most recent thirty (30)

boiler-operating-day period for that unit; Step three, divide the total amount of NO_X calculated from Step one by the total heat input calculated from Step two to calculate the rolling 30-boiler-operating-day NO_X emission rate, in pounds per MMBtu for that unit. Each rolling 30-boiler-operating-day NO_X emission rate shall include all emissions and all heat input that occur during all periods within any boiler operating day, including emissions from startup, shutdown, and malfunction. If a valid NO_X pounds per hour or heat input is not available for any hour for the unit, that heat input and NO_X pounds per hour shall not be used in the calculation of the rolling 30-boiler-operating-day emission rate.

(iii) *Compliance determination for SO_2.* Compliance with the SO_2 emission limit for the unit shall be determined from fuel sulfur documentation demonstrating the use of either natural gas or natural gas combined with landfill gas.

(iv) *Compliance determination for PM_{10}.* Compliance with the PM_{10} emission limit for the unit shall be determined from performance stack tests. Within sixty (60) days following the compliance deadline specified in paragraph (j)(6) of this section, and at the request of the Regional Administrator thereafter, the owner/operator of the unit shall conduct a stack test on the unit to measure PM_{10} using EPA Methods 1 through 4, 201A, and Method 202, per 40 CFR part 51, appendix M. Each test shall consist of three runs, with each run at least one hundred twenty (120) minutes in duration and each run collecting a minimum sample of sixty (60) dry standard cubic feet. Results shall be reported in lb/MMBtu using the calculation in 40 CFR part 60, appendix A, Method 19.

(9) *Recordkeeping.* The owner/operator shall maintain the following records for at least five years:

(i) CEMS data measuring NO_X in lb/hr, SO_2 in lb/hr, and heat input rate per hour.

(ii) Daily rolling 30-boiler operating day emission rates of NO_X and SO_2 calculated in accordance with paragraphs (j)(7)(iii) and (iv) of this section.

(iii) Records of the relative accuracy test for NO_X lb/hr and SO_2 lb/hr measurement, and hourly heat input measurement.

(iv) Records of quality assurance and quality control activities for emissions systems including, but not limited to, any records required by 40 CFR part 75.

(v) Records of all major maintenance activities conducted on emission units, air pollution control equipment, and CEMS.

(vi) Any other records required by 40 CFR part 75.

(vii) Records of ammonia consumption for the unit, as recorded by the instrumentation required in paragraph (j)(7)(ii) of this section.

(viii) All PM stack test results.

(10) *Alternative recordkeeping requirements.* If the owner/operator chooses to comply with the emission limits of paragraph (j)(4) of this section, the owner/operator shall maintain the records listed in this paragraph (j)(10) in lieu of the records contained in paragraph (j)(9) of this section. The owner/operator shall maintain the following records for at least five years:

(i) CEMS data measuring NO_X in lb/hr and heat input rate per hour.

(ii) Daily rolling 30-boiler operating day emission rates of NO_X calculated in accordance with paragraph (j)(8)(ii) of this section.

(iii) Records of the relative accuracy test for NO_X lb/hr measurement and hourly heat input measurement.

(iv) Records of quality assurance and quality control activities for emissions systems including, but not limited to, any records required by 40 CFR part 75.

(v) Records of all major maintenance activities conducted on emission units, air pollution control equipment, and CEMS.

(vi) Any other records required by 40 CFR part 75.

(vii) Records sufficient to demonstrate that the fuel for the unit is natural gas or natural gas combined with landfill gas.

(viii) All PM_{10} stack test results.

(11) *Notifications.* All notifications required under this section shall be submitted by the owner/operator to the Director, Enforcement Division (Mail Code ENF–2–1), U.S. Environmental Protection Agency, Region 9, 75 Hawthorne Street, San Francisco, California 94105–3901.

(i) By March 31, 2017, the owner/operator shall submit notification by letter whether it will comply with the emission limits in paragraph (j)(3) of this section or whether it will comply with the emission limits in paragraph (j)(4) of this section. In the event that the owner/operator does not submit timely and proper notification by March 31, 2017, the owner/operator may not choose to comply with the alternative emission limits in paragraph (j)(4) of this section and shall comply with the emission limits in paragraph (j)(3) of this section.

(ii) The owner/operator shall submit notification of commencement of construction of any equipment which is being constructed to comply with either the NO_X or SO_2 emission limits in paragraph (j)(3) of this section.

(iii) The owner/operator shall submit semiannual progress reports on construction of any such equipment.

(iv) The owner/operator shall submit notification of initial startup of any such equipment.

(v) The owner/operator shall submit notification of its intent to comply with the PM_{10} emission limit in paragraph (j)(4)(iii) of this section within one hundred twenty (120) days following the compliance deadline specified in paragraph (j)(6) of this section. The notification shall include results of the initial performance test and the resulting applicable emission limit.

(12) *Reporting*. All reports required under this section shall be submitted by the owner/operator to the Director, Enforcement Division (Mail Code ENF–2–1), U.S. Environmental Protection Agency, Region 9, 75 Hawthorne Street, San Francisco, California 94105–3901. All reports required under this section shall be submitted within 30 days after the applicable compliance date(s) in paragraph (j)(5) of this section and at least semiannually thereafter, within 30 days after the end of a semiannual period. The owner/operator may submit reports more frequently than semiannually for the purposes of synchronizing reports required under this section with other reporting requirements, such as the title V monitoring report required by 40 CFR 70.6(a)(3)(iii)(A), but at no point shall the duration of a semiannual period exceed six months.

(i) The owner/operator shall submit a report that lists the daily rolling 30-boiler operating day emission rates for NO_X and SO_2.

(ii) The owner/operator shall submit excess emission reports for NO_X and SO_2 limits. Excess emissions means emissions that exceed the emission limits specified in paragraph (j)(3) of this section. Excess emission reports shall include the magnitude, date(s), and duration of each period of excess emissions; specific identification of each period of excess emissions that occurs during startups, shutdowns, and malfunctions of the unit; the nature and cause of any malfunction (if known); and the corrective action taken or preventative measures adopted.

(iii) The owner/operator shall submit a summary of CEMS operation, to include dates and duration of each period during which the CEMS was inoperative (except for zero and span adjustments and calibration checks), reason(s) why the CEMS was inoperative and steps taken to prevent recurrence, and any CEMS repairs or adjustments.

(iv) The owner/operator shall submit the results of any relative accuracy test audits performed during the two preceding calendar quarters.

(v) When no excess emissions have occurred or the CEMS has not been inoperative, repaired, or adjusted during the reporting period, the owner/operator shall state such information in the semiannual report.

(vi) The owner/operator shall submit results of any PM stack tests conducted for demonstrating compliance with the PM limit specified in paragraph (j)(3) of this section.

(13) *Alternative reporting requirements*. If the owner/operator chooses to comply with the emission limits of paragraph (j)(4) of this section, the owner/operator shall submit the reports listed in this paragraph (j)(13) in lieu of the reports contained in paragraph (j)(12) of this section. All reports required under this paragraph (j)(13) shall be submitted by the owner/operator to the Director, Enforcement Division (Mail Code ENF–2–1), U.S. Environmental

Protection Agency, Region 9, 75 Hawthorne Street, San Francisco, California 94105–3901. All reports required under this paragraph (j)(13) shall be submitted within 30 days after the applicable compliance date(s) in paragraph (j)(6) of this section and at least semiannually thereafter, within 30 days after the end of a semiannual period. The owner/operator may submit reports more frequently than semiannually for the purposes of synchronizing reports required under this section with other reporting requirements, such as the title V monitoring report required by 40 CFR 70.6(a)(3)(iii)(A), but at no point shall the duration of a semiannual period exceed six months.

(i) The owner/operator shall submit a report that lists the daily rolling 30-boiler operating day emission rates for NO_X.

(ii) The owner/operator shall submit excess emissions reports for NO_X limits. Excess emissions means emissions that exceed the emission limit specified in paragraph (j)(4) of this section. The reports shall include the magnitude, date(s), and duration of each period of excess emissions; specific identification of each period of excess emissions that occurs during startups, shutdowns, and malfunctions of the unit; the nature and cause of any malfunction (if known); and the corrective action taken or preventative measures adopted.

(iii) The owner/operator shall submit CEMS performance reports, to include dates and duration of each period during which the CEMS was inoperative (except for zero and span adjustments and calibration checks), reason(s) why the CEMS was inoperative and steps taken to prevent recurrence, and any CEMS repairs or adjustments.

(iv) The owner/operator shall submit the results of any relative accuracy test audits performed during the two preceding calendar quarters.

(v) When no excess emissions have occurred or the CEMS has not been inoperative, repaired, or adjusted during the reporting period, the owner/operator shall state such information in the semiannual report.

(vi) The owner/operator shall submit results of any PM_{10} stack tests conducted for demonstrating compliance with the PM_{10} limit specified in paragraph (j)(4) of this section.

(14) *Equipment operations.* (i) At all times, including periods of startup, shutdown, and malfunction, the owner/operator shall, to the extent practicable, maintain and operate the unit, including associated air pollution control equipment, in a manner consistent with good air pollution control practices for minimizing emissions. Pollution control equipment shall be designed and capable of operating properly to minimize emissions during all expected operating conditions. Determination of whether acceptable operating and maintenance procedures are being used will be based on information available to the Regional Administrator, which may include, but is not limited to, monitoring results, review of operating and maintenance procedures, and inspection of the unit.

(ii) After completion of installation of ammonia injection on a unit, the owner/operator shall inject sufficient ammonia to achieve compliance with the NO_X emission limit contained in paragraph (j)(3) of this section for that unit while preventing excessive ammonia emissions.

(15) *Enforcement.* Notwithstanding any other provision in this implementation plan, any credible evidence or information relevant as to whether the unit would have been in compliance with applicable requirements if the appropriate performance or compliance test had been performed can be used to establish whether or not the owner/operator has violated or is in violation of any standard or applicable emission limit in the plan.

(k) *Source-specific federal implementation plan for regional haze at Clarkdale Cement Plant and Rillito Cement Plant*—(1) *Applicability.* This paragraph (k) applies to each owner/operator of the following cement kilns in the state of Arizona: Kiln 4 located at the cement plant in Clarkdale, Arizona, and kiln 4 located at the cement plant in Rillito, Arizona.

(2) *Definitions.* Terms not defined in this paragraph (k)(2) shall have the meaning given them in the Clean Air Act or EPA's regulations implementing

the Clean Air Act. For purposes of this paragraph (k):

Ammonia injection shall include any of the following: Anhydrous ammonia, aqueous ammonia or urea injection.

Continuous emission monitoring system or CEMS means the equipment required by this section to sample, analyze, measure, and provide, by means of readings recorded at least once every 15 minutes (using an automated data acquisition and handling system), a permanent record of NO_X emissions, diluent, or stack gas volumetric flow rate.

Kiln operating day means a 24-hour period between 12 midnight and the following midnight during which the kiln operates at any time.

Kiln operation means any period when any raw materials are fed into the kiln or any period when any combustion is occurring or fuel is being fired in the kiln.

NO_X means nitrogen oxides.

Owner/operator means any person who owns or who operates, controls, or supervises a cement kiln identified in paragraph (k)(1) of this section.

Unit means a cement kiln identified in paragraph (k)(1) of this section.

(3) *Emissions limitations.* (i) The owner/operator of kiln 4 of the Clarkdale Plant, as identified in paragraph (k)(1) of this section, shall not emit or cause to be emitted from kiln 4 NO_X in excess of 2.12 pounds of NO_X per ton of clinker produced, based on a rolling 30-kiln operating day basis.

(ii) The owner/operator of kiln 4 of the Rillito Plant, as identified in paragraph (k)(1) of this section, shall not emit or cause to be emitted from kiln 4 NO_X in excess of 3.46 pounds of NO_X per ton of clinker produced, based on a rolling 30-kiln operating day basis.

(4) *Alternative emissions limitation.* In lieu of the emission limitation listed in paragraph (k)(3)(i) of this section, the owner/operator of kiln 4 of the Clarkdale Plant may choose to comply with the following limitation by providing notification per paragraph (k)(13)(iv) of this section. The owner/operator of kiln 4 of the Clarkdale Plant, as identified in paragraph (k)(1) of this section, shall not emit or cause to be emitted from kiln 4 NO_X in excess of 810 tons per year, based on a rolling 12-month basis.

(5) *Compliance date.* (i) The owner/operator of each unit identified in paragraph (k)(1) of this section shall comply with the NO_X emissions limitations and other NO_X-related requirements of this paragraph (k)(3) of this section no later than December 31, 2018.

(ii) If the owner/operator of the Clarkdale Plant chooses to comply with the emission limit of paragraph (k)(4) of this section in lieu of paragraph (k)(3)(i) of this section, the owner/operator shall comply with the NO_X emissions limitations and other NO_X-related requirements of paragraph (k)(4) of this section no later than December 31, 2018.

(6) [Reserved]

(7) *Compliance determination—*

(i) *Continuous emission monitoring system.* (A) At all times after the compliance date specified in paragraph (k)(5) of this section, the owner/operator of the unit at the Clarkdale Plant shall maintain, calibrate, and operate a CEMS, in full compliance with the requirements found at 40 CFR 60.63(f) and (g), to accurately measure concentration by volume of NO_X, diluent, and stack gas volumetric flow rate from the in-line/raw mill stack, as well as the stack gas volumetric flow rate from the coal mill stack. The CEMS shall be used by the owner/operator to determine compliance with the emission limitation in paragraph (k)(3) of this section, in combination with data on actual clinker production. The owner/operator must operate the monitoring system and collect data at all required intervals at all times the affected unit is operating, except for periods of monitoring system malfunctions, repairs associated with monitoring system malfunctions, and required monitoring system quality assurance or quality control activities (including, as applicable, calibration checks and required zero and span adjustments).

(B) At all times after the compliance date specified in paragraph (k)(5) of this section, the owner/operator of the unit at the Rillito Plant shall maintain, calibrate, and operate a CEMS, in full compliance with the requirements

found at 40 CFR 60.63(f) and (g), to accurately measure concentration by volume of NO_X, diluent, and stack gas volumetric flow rate from the unit. The CEMS shall be used by the owner/operator to determine compliance with the emission limitation in paragraph (k)(3) of this section, in combination with data on actual clinker production. The owner/operator must operate the monitoring system and collect data at all required intervals at all times the affected unit is operating, except for periods of monitoring system malfunctions, repairs associated with monitoring system malfunctions, and required monitoring system quality assurance or quality control activities (including, as applicable, calibration checks and required zero and span adjustments).

(ii) *Methods.* (A) The owner/operator of each unit shall record the daily clinker production rates.

(B)(*1*) The owner/operator of each unit shall calculate and record the 30-kiln operating day average emission rate of NO_X, in pounds per ton (lb/ton) of clinker produced, as the total of all hourly emissions data for the cement kiln in the preceding 30-kiln operating days, divided by the total tons of clinker produced in that kiln during the same 30-day operating period, using the following equation:

$$E_D = k\left(\frac{1}{n}\right)\frac{\sum_{i=1}^{n}(C_i Q_i)}{\sum_{i=1}^{n} P_i}$$

Where:

E[D] = 30 kiln operating day average emission rate of NO_X, lb/ton of clinker;

C[i] = Concentration of NO_X for hour i as recorded by the CEMS required by paragraph (k)(7)(i) of this section, ppm;

Q[i] = volumetric flow rate of effluent gas for hour i as recorded by the CEMS required by paragraph (k)(7)(i) of this section, where C[i] and Q[i] are on the same basis (either wet or dry), scf/hr;

P[i] = total kiln clinker produced during production hour i, ton/hr;

k = conversion factor, 1.194×10^{-7} for NO_X; and

n = number of kiln operating hours over 30 kiln operating days, n = 1 up to 720.

(*2*) For each kiln operating hour for which the owner/operator does not have at least one valid 15-minute CEMS data value, the owner/operator must use the average emissions rate in pounds per ton (lb/hr) from the most recent previous hour for which valid data are available. Hourly clinker production shall be determined by the owner/operator in accordance with the requirements found at 40 CFR 60.63(b).

(C) At the end of each kiln operating day, the owner/operator shall calculate and record a new 30-day rolling average emission rate in lb/ton clinker from the arithmetic average of all valid hourly emission rates for the current kiln operating day and the previous 29 successive kiln operating days.

(D) Upon and after the completion of installation of ammonia injection on a unit, the owner/operator shall install, and thereafter maintain and operate, instrumentation to continuously monitor and record levels of ammonia injection for that unit.

(8) *Alternative compliance determination.* If the owner/operator of the Clarkdale Plant chooses to comply with the emission limits of paragraph (k)(4) of this section, this paragraph may be used in lieu of paragraph (k)(7) of this section to demonstrate compliance with the emission limits in paragraph (k)(4) of this section.

(i) *Continuous emission monitoring system.* At all times after the compliance date specified in paragraph (k)(5) of this section, the owner/operator of the unit at the Clarkdale Plant shall maintain, calibrate, and operate a CEMS, in full compliance with the requirements found at 40 CFR 60.63(f) and (g), to accurately measure concentration by volume of NO_X, diluent, and stack gas volumetric flow rate from the in-line/raw mill stack, as well as the stack gas volumetric flow rate from the coal mill stack. The CEMS shall be used by the

owner/operator to determine compliance with the emission limitation in paragraph (k)(4) of this section. The owner/operator must operate the monitoring system and collect data at all required intervals at all times the affected unit is operating, except for periods of monitoring system malfunctions, repairs associated with monitoring system malfunctions, and required monitoring system quality assurance or quality control activities (including, as applicable, calibration checks and required zero and span adjustments).

(ii) *Method*. Compliance with the ton per year NO_X emission limit described in paragraph (k)(4) of this section shall be determined based on a rolling 12-month basis. The rolling 12-month NO_X emission rate for the kiln shall be calculated within 30 days following the end of each calendar month in accordance with the following procedure: Step one, sum the hourly pounds of NO_X emitted for the month just completed and the eleven (11) months preceding the month just completed, to calculate the total pounds of NO_X emitted over the most recent twelve (12) month period for that kiln; Step two, divide the total pounds of NO_X calculated from Step one by two thousand (2,000) to calculate the total tons of NO_X. Each rolling 12-month NO_X emission rate shall include all emissions that occur during all periods within the 12-month period, including emissions from startup, shutdown and malfunction.

(iii) Upon and after the completion of installation of ammonia injection on the unit, the owner/operator shall install, and thereafter maintain and operate, instrumentation to continuously monitor and record levels of ammonia injection for that unit.

(9) *Recordkeeping*. The owner/operator of each unit shall maintain the following records for at least five years:

(i) All CEMS data, including the date, place, and time of sampling or measurement; emissions and parameters sampled or measured; and results.

(ii) All records of clinker production.

(iii) Daily 30-day rolling emission rates of NO_X, calculated in accordance with paragraph (k)(7)(ii) of this section.

(iv) Records of quality assurance and quality control activities for emissions measuring systems including, but not limited to, any records specified by 40 CFR part 60, Appendix F, Procedure 1.

(v) Records of ammonia injection, as recorded by the instrumentation required in paragraph (k)(7)(ii)(D) of this section.

(vi) Records of all major maintenance activities conducted on emission units, air pollution control equipment, CEMS and clinker production measurement devices.

(vii) Any other records specified by 40 CFR part 60, subpart F, or 40 CFR part 60, Appendix F, Procedure 1.

(10) *Alternative recordkeeping requirements*. If the owner/operator of the Clarkdale Plant chooses to comply with the emission limits of paragraph (k)(4) of this section, the owner/operator shall maintain the records listed in this paragraph in lieu of the records contained in paragraph (k)(9) of this section. The owner or operator shall maintain the following records for at least five years:

(i) All CEMS data, including the date, place, and time of sampling or measurement; emissions and parameters sampled or measured; and results.

(ii) Monthly rolling 12-month emission rates of NO_X, calculated in accordance with paragraph (k)(8)(ii) of this section.

(iii) Records of quality assurance and quality control activities for emissions measuring systems including, but not limited to, any records specified by 40 CFR part 60, Appendix F, Procedure 1.

(iv) Records of ammonia injection, as recorded by the instrumentation required in paragraph (k)(8)(iii) of this section.

(v) Records of all major maintenance activities conducted on emission units, air pollution control equipment, and CEMS measurement devices.

(vi) Any other records specified by 40 CFR part 60, subpart F, or 40 CFR part 60, Appendix F, Procedure 1.

(11) *Reporting*. All reports and notifications required under this paragraph (k) shall be submitted by the owner/operator to U.S. Environmental Protection Agency, Region 9, Enforcement Division via electronic mail to *aeo_r9@epa.gov* and to Air Division via

electronic mail to *R9AirPermits@epa.gov*. Reports required under this paragraph (k)(11)(iii) through (k)(11)(vii) of this section shall be submitted within 30 days after the applicable compliance date in paragraph (k)(5) of this section and at least semiannually thereafter, within 30 days after the end of a semiannual period. The owner/operator may submit reports more frequently than semiannually for the purposes of synchronizing reports required under this section with other reporting requirements, such as the title V monitoring report required by 40 CFR 70.6(a)(3)(iii)(A), but at no point shall the duration of a semiannual period exceed six months.

(i) Prior to commencing construction of the ammonia injection system, the owner/operator shall submit to the EPA a report describing the design of the SNCR system. This report shall include: reagent type, description of the locations selected for reagent injection, reagent injection rate (expressed as a molar ratio of reagent to exhaust gas), equipment list, equipment arrangement, and a summary of kiln characteristics that were relied upon as the design basis for the SNCR system.

(ii) Within 30 days following the NO_X compliance date in paragraph (k)(5)(i) of this section, the owner/operator shall submit to the EPA a report of any process improvement or debugging activities that were performed on the SNCR system. This report shall include: a description of each process adjustment performed on the SNCR system or the kiln, a discussion of whether the adjustment affected NO_X emission rates, a description of the range (if applicable) over which the adjustment was examined, and a discussion of how the adjustment will be reflected or accounted for in kiln operating practices. If CEMS data or kiln operating data were recorded during process improvement or debugging activities, the owner/operator shall submit the recorded CEMS and kiln operating data with the report. The data shall be submitted in an electronic format consistent with and able to be manipulated by a spreadsheet program such as Microsoft Excel.

(iii) The owner/operator shall submit a report that lists the daily 30-day rolling emission rates for NO_X.

(iv) The owner/operator shall submit excess emissions reports for NO_X limits. Excess emissions means emissions that exceed the emissions limits specified in paragraph (k)(3) of this section. The reports shall include the magnitude, date(s), and duration of each period of excess emissions, specific identification of each period of excess emissions that occurs during startups, shutdowns, and malfunctions of the unit, the nature and cause of any malfunction (if known), and the corrective action taken or preventative measures adopted.

(v) The owner/operator shall submit CEMS performance reports, to include dates and duration of each period during which the CEMS was inoperative (except for zero and span adjustments and calibration checks), reason(s) why the CEMS was inoperative and steps taken to prevent recurrence, and any CEMS repairs or adjustments.

(vi) The owner/operator shall also submit results of any CEMS performance tests specified by 40 CFR part 60, Appendix F, Procedure 1 (Relative Accuracy Test Audits, Relative Accuracy Audits, and Cylinder Gas Audits).

(vii) When no excess emissions have occurred or the CEMS has not been inoperative, repaired, or adjusted during the reporting period, the owner/operator shall state such information in the reports required by paragraph (k)(9)(ii) of this section.

(12) *Alternative reporting requirements.* If the owner/operator of the Clarkdale Plant chooses to comply with the emission limits of paragraph (k)(4) of this section, the owner/operator shall submit the reports listed in this paragraph in lieu of the reports contained in paragraph (k)(11) of this section. All reports required under this paragraph (k)(12) shall be submitted within 30 days after the applicable compliance date in paragraph (k)(5) of this section and at least semiannually thereafter, within 30 days after the end of a semiannual period. The owner/operator may submit

reports more frequently than semiannually for the purposes of synchronizing reports required under this section with other reporting requirements, such as the title V monitoring report required by 40 CFR 70.6(a)(3)(iii)(A), but at no point shall the duration of a semiannual period exceed six months.

(i) The owner/operator shall submit a report that lists the monthly rolling 12-month emission rates for NO_X.

(ii) The owner/operator shall submit excess emissions reports for NO_X limits. Excess emissions means emissions that exceed the emissions limits specified in paragraph (k)(3) of this section. The reports shall include the magnitude, date(s), and duration of each period of excess emissions, specific identification of each period of excess emissions that occurs during startups, shutdowns, and malfunctions of the unit, the nature and cause of any malfunction (if known), and the corrective action taken or preventative measures adopted.

(iii) The owner/operator shall submit CEMS performance reports, to include dates and duration of each period during which the CEMS was inoperative (except for zero and span adjustments and calibration checks), reason(s) why the CEMS was inoperative and steps taken to prevent recurrence, and any CEMS repairs or adjustments.

(iv) The owner/operator shall also submit results of any CEMS performance tests specified by 40 CFR part 60, Appendix F, Procedure 1 (Relative Accuracy Test Audits, Relative Accuracy Audits, and Cylinder Gas Audits).

(v) When no excess emissions have occurred or the CEMS has not been inoperative, repaired, or adjusted during the reporting period, the owner/operator shall state such information in the reports required by paragraph (k)(9)(ii) of this section.

(13) *Notifications.* (i) The owner/operator shall submit notification of commencement of construction of any equipment which is being constructed to comply with the NO_X emission limits in paragraph (k)(3) of this section.

(ii) The owner/operator shall submit semiannual progress reports on construction of any such equipment.

(iii) The owner/operator shall submit notification of initial startup of any such equipment.

(iv) By June 30, 2018, the owner/operator of the Clarkdale Plant shall notify EPA Region 9 by letter whether it will comply with the emission limits in paragraph (k)(3)(i) of this section or whether it will comply with the emission limits in paragraph (k)(4) of this section. In the event that the owner/operator does not submit timely and proper notification by June 30, 2018, the owner/operator of the Clarkdale Plant may not choose to comply with the alternative emission limits in paragraph (k)(4) of this section and shall comply with the emission limits in paragraph (k)(3)(i) of this section.

(14) *Equipment operation.* (i) At all times, including periods of startup, shutdown, and malfunction, the owner or operator shall, to the extent practicable, maintain and operate the unit including associated air pollution control equipment in a manner consistent with good air pollution control practices for minimizing emissions. Pollution control equipment shall be designed and capable of operating properly to minimize emissions during all expected operating conditions. Determination of whether acceptable operating and maintenance procedures are being used will be based on information available to the Regional Administrator which may include, but is not limited to, monitoring results, review of operating and maintenance procedures, and inspection of the unit.

(ii) After completion of installation of ammonia injection on a unit, the owner or operator shall inject sufficient ammonia to achieve compliance with NO_X emission limits set forth in paragraph (k)(3) of this section for that unit while preventing excessive ammonia emissions.

(15) *Enforcement.* Notwithstanding any other provision in this implementation plan, any credible evidence or information relevant as to whether the unit would have been in compliance with applicable requirements if the appropriate performance or compliance test had been performed, can be used to establish whether or not the owner or operator has violated or is in violation

of any standard or applicable emission limit in the plan.

(l) *Source-specific federal implementation plan for regional haze at Hayden Copper Smelter*—(1) *Applicability*. This paragraph (l) applies to each owner/operator of batch copper converters #1, 3, 4 and 5 and anode furnaces #1 and #2 at the copper smelting plant located in Hayden, Gila County, Arizona.

(2) *Definitions*. Terms not defined in this paragraph (l)(2) shall have the meaning given them in the Clean Air Act or EPA's regulations implementing the Clean Air Act. For purposes of this paragraph (l):

Anode furnace means a furnace in which molten blister copper is refined through introduction of a reducing agent such as natural gas.

Batch copper converter means a Peirce-Smith converter in which copper matte is oxidized to form blister copper by a process that is performed in discrete batches using a sequence of charging, blowing, skimming, and pouring.

Blister copper means an impure form of copper, typically between 96 and 98 percent pure copper that is the output of the converters.

Calendar day means a 24 hour period that begins and ends at midnight, local standard time.

Capture system means the collection of components used to capture gases and fumes released from one or more emission points, and to convey the captured gases and fumes to one or more control devices. A capture system may include, but is not limited to, the following components as applicable to a given capture system design: Duct intake devices, hoods, enclosures, ductwork, dampers, manifolds, plenums, and fans.

Continuous emission monitoring system or CEMS means the equipment required by this section to sample, analyze, measure, and provide, by means of readings recorded at least once every 15 minutes (using an automated data acquisition and handling system (DAHS)), a permanent record of SO_2 emissions, other pollutant emissions, diluent, or stack gas volumetric flow rate.

Copper matte means a material predominately composed of copper and iron sulfides produced by smelting copper ore concentrates.

NO_X means nitrogen oxides.

Owner/operator means any person who owns or who operates, controls, or supervises the equipment identified in paragraph (l)(1) of this section.

Regional Administrator means the Regional Administrator of EPA Region 9 or his or her designated representative.

SO_2 means sulfur dioxide.

(3) *Emission capture*. (i) The owner/operator must operate a capture system that has been designed to maximize collection of process off gases vented from each converter identified in paragraph (l)(1) of this section. The capture system must include primary and secondary capture systems as described in 40 CFR 63.1444(d)(2).

(ii) The operation of the batch copper converters, primary capture system, and secondary capture system shall be optimized to capture the maximum amount of process off gases vented from each converter at all times.

(iii) The owner/operator shall prepare a written operation and maintenance plan according to the requirements in paragraph (l)(3)(iv) of this section and submit this plan to the Regional Administrator 180 days prior to the compliance date in paragraph (l)(5)(ii) of this section. The Regional Administrator shall approve or disapprove the plan within 180 days of submittal. At all times when one or more converters are blowing, the owner/operator must operate the capture system consistent with this plan.

(iv) The written operations and maintenance plan must address the following requirements as applicable to the capture system or control device.

(A) *Preventative maintenance*. The owner/operator must perform preventative maintenance for each capture system and control device according to written procedures specified in owner/operator's operation and maintenance plan. The procedures must include a preventative maintenance schedule that is consistent with the manufacturer's or engineer's instructions for routine and long-term maintenance.

(B) *Capture system inspections*. The owner/operator must perform capture system inspections for each capture

system in accordance with the requirements of 40 CFR 63.1447(b)(2).

(C) *Copper converter department capture system operating limits.* The owner/operator must establish, according to the requirements 40 CFR 63.1447(b)(3)(i) through (iii), operating limits for the capture system that are representative and reliable indicators of the optimized performance of the capture system, consistent with paragraph (l)(3)(ii) of this section, when it is used to collect the process off-gas vented from batch copper converters during blowing.

(4) *Emission limitations and work practice standards.* (i) SO_2 emissions collected by any primary capture system required by paragraph (l)(3) of this section must be controlled by one or more control devices and reduced by at least 99.8 percent, based on a 365-day rolling average.

(ii) SO_2 emissions collected by any secondary capture system required by paragraph (l)(3) of this section must be controlled by one or more control devices and reduced by at least 98.5 percent, based on a 365-day rolling average.

(iii) The owner/operator must not cause or allow to be discharged to the atmosphere from any primary capture system required by paragraph (l)(3) of this section off-gas that contains nonsulfuric acid particulate matter in excess of 6.2 mg/dscm as measured using the test methods specified in 40 CFR 63.1450(b).

(iv) The owner/operator must not cause or allow to be discharged to the atmosphere from any secondary capture system required by paragraph (l)(3) of this section off-gas that contains particulate matter in excess of 23 mg/dscm as measured using the test methods specified in 40 CFR 63.1450(a).

(v) Total NO_X emissions from anode furnaces #1 and #2 and the batch copper converters shall not exceed 40 tons per 12-continuous month period.

(vi) Anode furnaces #1 and #2 shall only be charged with blister copper or higher purity copper. This charging limitation does not extend to the use or addition of poling or fluxing agents necessary to achieve final casting chemistry.

(5) *Compliance dates.* (i) The owner/operator of each batch copper converter identified in paragraph (l)(1) of this section shall comply with the emissions limitations in paragraphs (l)(4)(ii) and (l)(4)(iv) of this section and other requirements of this section related to the secondary capture system no later than September 3, 2018.

(ii) The owner/operator of each batch copper converter identified in paragraph (l)(1) of this section shall comply with the emissions limitations in paragraphs (l)(4)(i), (l)(4)(iii), (l)(4)(v), and (l)(4)(vi) of this section and other requirements of this section, except those requirements related to the secondary capture system, no later than September 4, 2017.

(6) *Compliance determination*—(i) *Continuous emission monitoring system.* At all times after the compliance date specified in paragraph (l)(5) of this section, the owner/operator of each batch copper converter identified in paragraph (l)(1) of this section shall maintain, calibrate, and operate a CEMS, in full compliance with the requirements found at 40 CFR 60.13 and 40 CFR part 60, appendices B and F, to accurately measure the mass emission rate in pounds per hour of SO_2 emissions entering each control device used to control emissions from the converters, and venting from the converters to the atmosphere after passing through a control device or an uncontrolled bypass stack. The CEMS shall be used by the owner/operator to determine compliance with the emission limitation in paragraph (l)(4) of this section. The owner/operator must operate the monitoring system and collect data at all required intervals at all times that an affected unit is operating, except for periods of monitoring system malfunctions, repairs associated with monitoring system malfunctions, and required monitoring system quality assurance or quality control activities (including, as applicable, calibration checks and required zero and span adjustments).

(ii) *Compliance determination for SO_2 limit for the converters.* The 365-day rolling SO_2 emission control efficiency for the converters shall be calculated separately for the primary capture system and the secondary capture system for each calendar day in accordance with the following procedure: Step one, sum

the hourly pounds of SO_2 vented to each uncontrolled bypass stack and to each control device used to control emissions from the converters for the current calendar day and the preceding three-hundred-sixty-four (364) calendar days, to calculate the total pounds of pre-control SO_2 emissions over the most recent three-hundred-sixty-five (365) calendar day period; Step two, sum the hourly pounds of SO_2 vented to each uncontrolled bypass stack and emitted from the release point of each control device used to control emissions from the converters for the current calendar day and the preceding three-hundred-sixty-four (364) calendar days, to calculate the total pounds of post-control SO_2 emissions over the most recent three-hundred-sixty-five (365) calendar day period; Step three, divide the total amount of post-control SO_2 emissions calculated from Step two by the total amount of pre-control SO_2 emissions calculated from Step one, subtract the resulting ratio from one, and multiply the difference by 100 percent to calculate the 365-day rolling SO_2 emission control efficiency as a percentage.

(iii) *Compliance determination for non-sulfuric acid particulate matter*. Compliance with the emission limit for non-sulfuric acid particulate matter in paragraph (l)(4)(iii) of this section shall be demonstrated by the procedures in 40 CFR 63.1451(b) and 63.1453(a)(2). The owner/operator shall conduct an initial compliance test within 180 days after the compliance date specified in paragraph (l)(5) of this section unless a test performed according to the procedures in 40 CFR 63.1450 in the past year shows compliance with the limit.

(iv) *Compliance determination for particulate matter*. Compliance with the emission limit for particulate matter in paragraph (l)(4)(iv) of this section shall be demonstrated by the procedures in 40 CFR 63.1451(a) and 63.1453(a)(1). The owner/operator shall conduct an initial compliance test within 180 days after the compliance date specified in paragraph (l)(5) of this section unless a test performed according to the procedures in 40 CFR 63.1450 in the past year shows compliance with the limit.

(v) *Compliance determination for NO_X*. Compliance with the emission limit for NO_X in paragraph (l)(4)(v) of this section shall be demonstrated by monitoring natural gas consumption in each of the units identified in paragraph (l)(1) of this section for each calendar day. At the end of each calendar month, the owner/operator shall calculate 12-consecutive month NO_X emissions by multiplying the daily natural gas consumption rates for each unit by an approved emission factor and adding the sums for all units over the previous 12-consecutive month period.

(7) *Alternatives to requirements to install CEMS*. The requirement in paragraph (l)(6)(i) of this section to install CEMS to measure the mass of SO_2 entering a control device or venting to the atmosphere through uncontrolled bypass stacks will be waived if the owner/operator complies with one of the options in this paragraph (l)(7).

(i) *Acid plants*. The owner/operator may calculate the pounds of SO_2 entering an acid plant during a calendar day by adding the pounds of SO_2 emitted through the acid plant tail stack and 0.653 times the daily production of anhydrous sulfuric acid from the acid plant.

(ii) *Uncontrolled bypass stack*. The owner/operator may calculate the pounds of SO_2 venting to the atmosphere through an uncontrolled bypass stack based on test data provided the facility operates according to a start-up, shutdown, and malfunction plan consistent with 40 CFR 63.6(e)(3) and the Regional Administrator has approved a calculation methodology for planned and unplanned bypass events.

(8) *Capture system monitoring*. For each operating limit established under the capture system operation and maintenance plan required by paragraph (l)(4) of this section, the owner/operator must install, operate, and maintain an appropriate monitoring device according to the requirements in 40 CFR 63.1452(a)(1) through (6) to measure and record the operating limit value or setting at all times the required capture system is operating. Dampers that are manually set and remain in the same position at all times

the capture system is operating are exempted from these monitoring requirements.

(9) *Recordkeeping*. The owner/operator shall maintain the following records for at least five years:

(i) All CEMS data, including the date, place, and time of sampling or measurement; parameters sampled or measured; and results.

(ii) Records of quality assurance and quality control activities for emissions measuring systems including, but not limited to, any records required by 40 CFR part 60, appendix F, Procedure 1.

(iii) Records of all major maintenance activities conducted on emission units, air pollution control equipment, and CEMS.

(iv) Any other records required by 40 CFR part 60, subpart F, or 40 CFR part 60, appendix F, Procedure 1.

(v) Records of all monitoring required by paragraph (l)(8) of this section.

(vi) Records of daily sulfuric acid production in tons per day of pure, anhydrous sulfuric acid if the owner/operator chooses to use the alternative compliance determination method in paragraph (l)(7)(i) of this section.

(vii) Records of planned and unplanned bypass events and calculations used to determine emissions from bypass events if the owner/operator chooses to use the alternative compliance determination method in paragraph (l)(7)(ii) of this section.

(viii) Records of daily natural gas consumption in each units identified in paragraph (l)(1) of this section and all calculations performed to demonstrate compliance with the limit in paragraph (l)(4)(vi) of this section.

(10) *Reporting*. All reports required under this section shall be submitted by the owner/operator to the Director, Enforcement Division (Mail Code ENF–2–1), U.S. Environmental Protection Agency, Region 9, 75 Hawthorne Street, San Francisco, California 94105–3901. All reports required under this section shall be submitted within 30 days after the applicable compliance date in paragraph (l)(5) of this section and at least semiannually thereafter, within 30 days after the end of a semiannual period. The owner/operator may submit reports more frequently than semiannually for the purposes of synchronizing reports required under this section with other reporting requirements, such as the title V monitoring report required by 40 CFR 70.6(a)(3)(iii)(A), but at no point shall the duration of a semiannual period exceed six months.

(i) The owner/operator shall promptly submit excess emissions reports for the SO_2 limit. Excess emissions means emissions that exceed the emissions limit specified in paragraph (d) of this section. The reports shall include the magnitude, date(s), and duration of each period of excess emissions, specific identification of each period of excess emissions that occurs during startups, shutdowns, and malfunctions of the unit, the nature and cause of any malfunction (if known), and the corrective action taken or preventative measures adopted. For the purpose of this paragraph (l)(10)(i), promptly shall mean within 30 days after the end of the month in which the excess emissions were discovered.

(ii) The owner/operator shall submit CEMS performance reports, to include dates and duration of each period during which the CEMS was inoperative (except for zero and span adjustments and calibration checks), reason(s) why the CEMS was inoperative and steps taken to prevent recurrence, and any CEMS repairs or adjustments. The owner/operator shall submit reports semiannually.

(iii) The owner/operator shall also submit results of any CEMS performance tests required by 40 CFR part 60, appendix F, Procedure 1 (Relative Accuracy Test Audits, Relative Accuracy Audits, and Cylinder Gas Audits).

(iv) When no excess emissions have occurred or the CEMS has not been inoperative, repaired, or adjusted during the reporting period, the owner/operator shall state such information in the semiannual report.

(v) When performance testing is required to determine compliance with an emission limit in paragraph (l)(4) of this section, the owner/operator shall submit test reports as specified in 40 CFR part 63, subpart A.

(11) *Notifications*. (i) The owner/operator shall notify EPA of commencement of construction of any equipment

which is being constructed to comply with the capture or emission limits in paragraph (l)(3) or (4) of this section.

(ii) The owner/operator shall submit semiannual progress reports on construction of any such equipment.

(iii) The owner/operator shall submit notification of initial startup of any such equipment.

(12) *Equipment operations.* At all times, including periods of startup, shutdown, and malfunction, the owner or operator shall, to the extent practicable, maintain and operate the unit including associated air pollution control equipment in a manner consistent with good air pollution control practices for minimizing emissions. Pollution control equipment shall be designed and capable of operating properly to minimize emissions during all expected operating conditions. Determination of whether acceptable operating and maintenance procedures are being used will be based on information available to the Regional Administrator which may include, but is not limited to, monitoring results, review of operating and maintenance procedures, and inspection of the unit.

(13) *Enforcement.* Notwithstanding any other provision in this implementation plan, any credible evidence or information relevant as to whether the unit would have been in compliance with applicable requirements if the appropriate performance or compliance test had been performed, can be used to establish whether or not the owner or operator has violated or is in violation of any standard or applicable emission limit in the plan.

(m) *Source-specific federal implementation plan for regional haze at Miami Copper Smelter*—(1) *Applicability.* This paragraph (m) applies to each owner/operator of batch copper converters 2, 3, 4 and 5 and the electric furnace at the copper smelting plant located in Miami, Gila County, Arizona.

(2) *Definitions.* Terms not defined in this paragraph (m)(2) shall have the meaning given them in the Clean Air Act or EPA's regulations implementing the Clean Air Act. For purposes of this paragraph (m):

Batch copper converter means a Hoboken converter in which copper matte is oxidized to form blister copper by a process that is performed in discrete batches using a sequence of charging, blowing, skimming, and pouring.

Calendar day means a 24 hour period that begins and ends at midnight, local standard time.

Capture system means the collection of components used to capture gases and fumes released from one or more emission points, and to convey the captured gases and fumes to one or more control devices. A capture system may include, but is not limited to, the following components as applicable to a given capture system design: duct intake devices, hoods, enclosures, ductwork, dampers, manifolds, plenums, and fans.

Continuous emission monitoring system or CEMS means the equipment required by this section to sample, analyze, measure, and provide, by means of readings recorded at least once every 15 minutes (using an automated data acquisition and handling system (DAHS)), a permanent record of SO_2 emissions, other pollutant emissions, diluent, or stack gas volumetric flow rate.

Copper matte means a material predominately composed of copper and iron sulfides produced by smelting copper ore concentrates.

Electric furnace means a furnace in which copper matte and slag are heated by electrical resistance without the mechanical introduction of air or oxygen.

NO_X means nitrogen oxides.

Owner/operator means any person who owns or who operates, controls, or supervises the equipment identified in paragraph (m)(1) of this section.

Slag means the waste material consisting primarily of iron sulfides separated from copper matte during the smelting and refining of copper ore concentrates.

SO_2 means sulfur dioxide.

(3) *Emission capture.* (i) The owner/operator of the batch copper converters identified in paragraph (m)(1) of this section must operate a capture system that has been designed to maximize collection of process off gases vented from each converter. The capture system must include a primary capture system as described in 40 CFR 63.1444(d)(3) and a secondary capture

system designed to maximize the collection of emissions not collected by the primary capture system.

(ii) The operation of the batch copper converters, primary capture system, and secondary capture system shall be optimized to capture the maximum amount of process off gases vented from each converter at all times.

(iii) The owner/operator shall prepare a written operation and maintenance plan according to the requirements in paragraph (m)(3)(iv) of this section and submit this plan to the Regional Administrator 180 days prior to the compliance date in paragraph (m)(5) of this section. The Regional Administrator shall approve or disapprove the plan within 180 days of submittal. At all times when one or more converters are blowing, the owner/operator must operate the capture system consistent with this plan.

(iv) The written operations and maintenance plan must address the following requirements as applicable to the capture system or control device.

(A) *Preventative maintenance.* The owner/operator must perform preventative maintenance for each capture system and control device according to written procedures specified in owner/operator's operation and maintenance plan. The procedures must include a preventative maintenance schedule that is consistent with the manufacturer's or engineer's instructions for routine and long-term maintenance.

(B) *Capture system inspections.* The owner/operator must perform capture system inspections for each capture system in accordance with the requirements of 40 CFR 63.1447(b)(2).

(C) *Copper converter department capture system operating limits.* The owner/operator must establish, according to the requirements 40 CFR 63.1447(b)(3)(i) through (iii), operating limits for the capture system that are representative and reliable indicators of the performance of capture system when it is used to collect the process off-gas vented from batch copper converters during blowing.

(4) *Emission limitations and work practice standards.* (i) SO_2 emissions collected by the capture system required by paragraph (m)(3) of this section must be controlled by one or more control devices and reduced by at least 99.7 percent, based on a 365-day rolling average.

(ii) The owner/operator must not cause or allow to be discharged to the atmosphere from any primary capture system required by paragraph (m)(3) of this section off-gas that contains non-sulfuric acid particulate matter in excess of 6.2 mg/dscm as measured using the test methods specified in 40 CFR 63.1450(b).

(iii) Total NO_X emissions the electric furnace and the batch copper converters shall not exceed 40 tons per 12-continuous month period.

(iv) The owner/operator shall not actively aerate the electric furnace.

(5) *Compliance dates.* (i) The owner/operator of each batch copper converter identified in paragraph (m)(1) of this section shall comply with the emission capture requirement in paragraph (m)(3) of this section; the emission limitation in paragraph (m)(4)(i) of this section; the compliance determination requirements in paragraphs (m)(6)(i) and (ii) and (m)(7) of this section; the capture system monitoring requirements in paragraph (m)(8) of this section; the recordkeeping requirements in paragraphs (m)(9)(i) through (viii) of this section; and the reporting requirements in paragraphs (m)(10)(i) through (iv) of this section no later than January 1, 2018.

(ii) The owner/operator of each batch copper converter and the electric furnace identified in paragraph (m)(1) of this section shall comply with all requirements of this paragraph (m) except those listed in paragraph (m)(5)(i) of this section no later than September 2, 2016.

(6) *Compliance determination*—(i) *Continuous emission monitoring system.* At all times after the compliance date specified in paragraph (m)(5) of this section, the owner/operator of each batch copper converter identified in paragraph (m)(1) of this section shall maintain, calibrate, and operate a CEMS, in full compliance with the requirements found at 40 CFR 60.13 and 40 CFR part 60, appendices B and F, to accurately measure the mass emission rate in pounds per hour of SO_2 emissions entering each control device used

to control emissions from the converters, and venting from the converters to the atmosphere after passing through a control device or an uncontrolled bypass stack. The CEMS shall be used by the owner/operator to determine compliance with the emission limitation in paragraph (m)(4)(i) of this section. The owner/operator must operate the monitoring system and collect data at all required intervals at all times that an affected unit is operating, except for periods of monitoring system malfunctions, repairs associated with monitoring system malfunctions, and required monitoring system quality assurance or quality control activities (including, as applicable, calibration checks and required zero and span adjustments).

(ii) *Compliance determination for SO_2.* The 365-day rolling SO_2 emission control efficiency for the converters shall be calculated for each calendar day in accordance with the following procedure: Step one, sum the hourly pounds of SO_2 vented to each uncontrolled bypass stack and to each control device used to control emissions from the converters for the current calendar day and the preceding three-hundred-sixty-four (364) calendar days, to calculate the total pounds of pre-control SO_2 emissions over the most recent three-hundred-sixty-five (365) calendar day period; Step two, sum the hourly pounds of SO_2 vented to each uncontrolled bypass stack and emitted from the release point of each control device used to control emissions from the converters for the current calendar day and the preceding three-hundred-sixty-four (364) calendar days, to calculate the total pounds of post-control SO_2 emissions over the most recent three-hundred-sixty-five (365) calendar day period; Step three, divide the total amount of post-control SO_2 emissions calculated from Step two by the total amount of pre-control SO_2 emissions calculated from Step one, subtract the resulting ratio from one, and multiply the difference by 100 percent to calculate the 365-day rolling SO_2 emission control efficiency as a percentage.

(iii) *Compliance determination for non-sulfuric acid particulate matter.* Compliance with the emission limit for non-sulfuric acid particulate matter in paragraph (m)(4)(ii) of this section shall be demonstrated by the procedures in 40 CFR 63.1451(b) and 63.1453(a)(2). The owner/operator shall conduct an initial compliance test within 180 days after the compliance date specified in paragraph (m)(5) of this section unless a test performed according to the procedures in 40 CFR 63.1450 in the past year shows compliance with the limit.

(iv) *Compliance determination for NO_X.* Compliance with the emission limit for NO_X in paragraph (m)(4)(iii) of this section shall be demonstrated by monitoring natural gas consumption in each of the units identified in paragraph (m)(1) of this section for each calendar day. At the end of each calendar month, the owner/operator shall calculate monthly and 12-consecutive month NO_X emissions by multiplying the daily natural gas consumption rates for each unit by an approved emission factor and adding the sums for all units over the previous 12-consecutive month period.

(7) *Alternatives to requirements to install CEMS.* The requirement in paragraph (m)(6)(i) of this section to install CEMS to measure the mass of SO_2 entering a control device or venting to the atmosphere through uncontrolled bypass stacks will be waived if the owner/operator complies with one of the options in this paragraph (m)(7).

(i) *Acid plants.* The owner/operator may calculate the pounds of SO_2 entering an acid plant during a calendar day by adding the pounds of SO_2 emitted through the acid plant tail stack and 0.653 times the daily production of anhydrous sulfuric acid from the acid plant.

(ii) *Alkali scrubber.* The owner/operator may calculate the pounds of SO_2 entering an alkali scrubber during a calendar day by using the following equation:

$$M_{in,SO2} = M_{out,SO2} + SF*M_{alk}$$

Where:

$M_{in,SO2}$ is the calculated mass of SO_2 entering the scrubber during a calendar day;

$M_{out,SO2}$ is the mass of SO_2 emitted through the scrubber stack measured by the CEMS for the calendar day;

SF is a stoichiometric factor; and

M_{alk} is the mass of alkali added to the scrubber liquor during the calendar day.

SF shall equal:

1.14 if the alkali species is calcium oxide (CaO);

1.59 if the alkali species is magnesium oxide (MgO);

0.801 if the alkali species is sodium hydroxide (NaOH); or

Another value if the owner/operator has received approval from the Regional Administrator in advance.

(iii) *Uncontrolled bypass stack*. The owner/operator may calculate the pounds of SO_2 venting to the atmosphere through an uncontrolled bypass stack based on test data provided the facility operates according to a start-up, shutdown, and malfunction plan consistent with 40 CFR 63.6(e)(3) and EPA has approved a calculation methodology for planned and unplanned bypass events.

(8) *Capture system monitoring*. For each operating limit established under the capture system operation and maintenance plan required by paragraph (m)(3) of this section, the owner/operator must install, operate, and maintain an appropriate monitoring device according to the requirements in 40 CFR 63.1452(a)(1) though (6) to measure and record the operating limit value or setting at all times the required capture system is operating. Dampers that are manually set and remain in the same position at all times the capture system is operating are exempted from these monitoring requirements.

(9) *Recordkeeping*. The owner/operator shall maintain the following records for at least five years:

(i) All CEMS data, including the date, place, and time of sampling or measurement; parameters sampled or measured; and results.

(ii) Records of quality assurance and quality control activities for emissions measuring systems including, but not limited to, any records required by 40 CFR part 60, appendix F, Procedure 1.

(iii) Records of all major maintenance activities conducted on emission units, air pollution control equipment, and CEMS.

(iv) Any other records required by 40 CFR part 60, subpart F, or 40 CFR part 60, appendix F, Procedure 1.

(v) Records of all monitoring required by paragraph (m)(8) of this section.

(vi) Records of daily sulfuric acid production in tons per day of pure, anhydrous sulfuric acid if the owner/operator chooses to use the alternative compliance determination method in paragraph (m)(7)(i) of this section.

(vii) Records of daily alkali consumption in tons per day of pure, anhydrous alkali if the owner/operator chooses to use the alternative compliance determination method in paragraph (m)(7)(ii) of this section.

(viii) Records of planned and unplanned bypass events and calculations used to determine emissions from bypass events if the owner/operator chooses to use the alternative compliance determination method in paragraph (m)(7)(iii) of this section.

(ix) Records of daily natural gas consumption in each units identified in paragraph (m)(1) of this section and all calculations performed to demonstrate compliance with the limit in paragraph (m)(4)(iv) of this section.

(10) *Reporting*. All reports required under this section shall be submitted by the owner/operator to the Director, Enforcement Division (Mail Code ENF–2–1), U.S. Environmental Protection Agency, Region 9, 75 Hawthorne Street, San Francisco, California 94105–3901. All reports required under this section shall be submitted within 30 days after the applicable compliance date in paragraph (m)(5) of this section and at least semiannually thereafter, within 30 days after the end of a semiannual period. The owner/operator may submit reports more frequently than semiannually for the purposes of synchronizing reports required under this section with other reporting requirements, such as the title V monitoring report required by 40 CFR 70.6(a)(3)(iii)(A), but at no point shall the duration of a semiannual period exceed six months.

(i) The owner/operator shall promptly submit excess emissions reports for the SO_2 limit. Excess emissions means emissions that exceed the emissions limit specified in paragraph (d) of this section. The reports shall include the magnitude, date(s), and duration of each period of excess emissions, specific identification of each period of excess emissions that occurs during startups, shutdowns, and malfunctions

of the unit, the nature and cause of any malfunction (if known), and the corrective action taken or preventative measures adopted. For the purpose of this paragraph (m)(10)(i), promptly shall mean within 30 days after the end of the month in which the excess emissions were discovered.

(ii) The owner/operator shall submit CEMS performance reports, to include dates and duration of each period during which the CEMS was inoperative (except for zero and span adjustments and calibration checks), reason(s) why the CEMS was inoperative and steps taken to prevent recurrence, and any CEMS repairs or adjustments. The owner/operator shall submit reports semiannually.

(iii) The owner/operator shall also submit results of any CEMS performance tests required by 40 CFR part 60, appendix F, Procedure 1 (Relative Accuracy Test Audits, Relative Accuracy Audits, and Cylinder Gas Audits).

(iv) When no excess emissions have occurred or the CEMS has not been inoperative, repaired, or adjusted during the reporting period, the owner/operator shall state such information in the semiannual report.

(v) When performance testing is required to determine compliance with an emission limit in paragraph (m)(4) of this section, the owner/operator shall submit test reports as specified in 40 CFR part 63, subpart A.

(11) *Notifications.*

(i) The owner/operator shall notify EPA of commencement of construction of any equipment which is being constructed to comply with the capture or emission limits in paragraph (m)(3) or (4) of this section.

(ii) The owner/operator shall submit semiannual progress reports on construction of any such equipment.

(iii) The owner/operator shall submit notification of initial startup of any such equipment.

(12) *Equipment operations.* At all times, including periods of startup, shutdown, and malfunction, the owner or operator shall, to the extent practicable, maintain and operate the unit including associated air pollution control equipment in a manner consistent with good air pollution control practices for minimizing emissions. Pollution control equipment shall be designed and capable of operating properly to minimize emissions during all expected operating conditions. Determination of whether acceptable operating and maintenance procedures are being used will be based on information available to the Regional Administrator which may include, but is not limited to, monitoring results, review of operating and maintenance procedures, and inspection of the unit.

(13) *Enforcement.* Notwithstanding any other provision in this implementation plan, any credible evidence or information relevant as to whether the unit would have been in compliance with applicable requirements if the appropriate performance or compliance test had been performed, can be used to establish whether or not the owner or operator has violated or is in violation of any standard or applicable emission limit in the plan.

[50 FR 28553, July 12, 1985, as amended at 52 FR 45137, Nov. 24, 1987; 56 FR 50186, Oct. 3, 1991; 61 FR 14975, Apr. 4, 1996; 77 FR 72577, Dec. 5, 2012; 78 FR 46175, July 30, 2013; 78 FR 48330, Aug. 8, 2013; 79 FR 52479, Sept. 3, 2014; 80 FR 19225, Apr. 10, 2015; 80 FR 21179, Apr. 17, 2015; 81 FR 21746, Apr. 13, 2016; 81 FR 83149, Nov. 21, 2016; 82 FR 3128, Jan. 10, 2017; 82 FR 15153, Apr. 26, 2017; 82 FR 46915, Oct. 10, 2017]

§ 52.146 Particulate matter (PM–10) Group II SIP commitments.

(a) On December 28, 1988, the Governor's designee for Arizona submitted a revision to the State Implementation Plan (SIP) for Casa Grande, Show Low, Safford, Flagstaff and Joseph City, that contains commitments, from the Director of the Arizona Department of Environmental Quality, for implementing all of the required activities including monitoring, reporting, emission inventory, and other tasks that may be necessary to satisfy the requirements of the PM–10 Group II SIPs.

(b) The Arizona Department of Environmental Quality has committed to comply with the PM–10 Group II State Implementation Plan (SIP) requirements for Casa Grande, Show Low, Safford, Flagstaff and Joseph City as provided in the PM–10 Group II SIPs for these areas.

(c) On December 28, 1988, the Governor's designee for Arizona submitted a revision to the State Implementation

Plan (SIP) for Ajo, that contains commitments from the Director of the Arizona Department of Environmental Quality, for implementing all of the required activities including monitoring, reporting, emission inventory, and other tasks that may be necessary to satisfy the requirements of the PM–10 Group II SIPs.

(d) The Arizona Department of Environmental Quality has committed to comply with the PM–10 Group II State Implementation Plan (SIP) requirements.

[55 FR 17437, Mar. 27, 1990 and 55 FR 18108, May 1, 1990]

§ 52.147 Interstate transport.

(a) *Approval*. The SIP submitted on May 24, 2007 meets the requirements of Clean Air Act section 110(a)(2)(D)(i)(I) (contribute significantly to nonattainment or interfere with maintenance of the NAAQS in any other state) and section 110(a)(2)(D)(i)(II) (interfere with measures in any other state to prevent significant deterioration of air quality, only) for the 1997 8-hour ozone and 1997 $PM_{2.5}$ NAAQS.

(b) *Disapproval*. The SIPs submitted on May 24, 2007, February 28, 2011, and May 3, 2013 do not meet the requirements of Clean Air Act section 110(a)(2)(D)(i)(II) (interfere with measures in any other state to protect visibility, only) for the 1997 8-hour ozone and 1997 $PM_{2.5}$ NAAQS.

(c) *Approval*. The SIP submitted on October 14, 2009 meets the requirements of Clean Air Act section 110(a)(2)(D)(i)(I) (contribute significantly to nonattainment or interfere with maintenance of the NAAQS in any other state) for the 2006 $PM_{2.5}$ NAAQS.

(d) *Disapproval*. The SIPs submitted on October 14, 2009 and August 24, 2012 do not meet the requirements of Clean Air Act section 110(a)(2)(D)(i)(II) (interfere with measures in any other state to prevent significant deterioration of air quality, only) for the 2006 $PM_{2.5}$ NAAQS.

(e) *Disapproval*. The SIPs submitted on October 14, 2009, February 28, 2011, and May 3, 2013 do not meet the requirements of Clean Air Act section 110(a)(2)(D)(i)(II) (interfere with measures in any other state to protect visibility, only) for the 2006 $PM_{2.5}$ NAAQS.

[78 FR 46175, July 30, 2013]

§ 52.150 Yavapai-Apache Reservation.

(a) The provisions for prevention of significant deterioration of air quality at 40 CFR 52.21 are applicable to the Yavapai-Apache Reservation, pursuant to § 52.21(a).

(b) In accordance with section 164 of the Clean Air Act and the provisions of 40 CFR 52.21(g), the Yavapai-Apache Indian Reservation is designated as a Class I area for the purposes of preventing significant deterioration of air quality.

[61 FR 56470, Nov. 1, 1996]

§ 52.151 Operating permits.

Insofar as the permitting threshold provisions in the Pinal County Code of Regulations for the Pinal County Air Quality Control District concern the treatment of sources of greenhouse gas emissions as major sources for purposes of title V operating permits, EPA approves such provisions only to the extent they require permits for such sources where the source emits or has the potential to emit at least 100,000 tpy CO_2 equivalent emissions, as well as 100 tpy on a mass basis, as of July 1, 2011.

[75 FR 82266, Dec. 30, 2010]

§ 52.152 Original identification of plan.

(a) This section identified the original ''The State of Arizona Air Pollution Control Implementation Plan'' and all revisions submitted by the State of Arizona that were federally approved prior to June 30, 2016.

(b) The plan was officially submitted on January 28, 1972.

(1) Arizona State Department of Health.

(i) Previously approved on May 31, 1972 in paragraph (b) of this section and now deleted without replacement: Arizona Revised Statutes section 36–1700 (''Declaration of Policy'')

(c) The plan revisions listed below were submitted on the dates specified.

(1) Letter of intent to revise plan submitted on March 1, 1972, by the Arizona State Board of Health.

(2) Letter of intent to revise plan submitted on March 2, 1972, by the Governor.

(3) Revised implementation plan submitted on May 30, 1972, by the Governor.

(i) Maricopa County Bureau of Air Pollution Control.

(A) Previously approved on July 27, 1972 and now deleted without replacement Rules 60 to 67.

(ii) Arizona State Department of Health.

(A) Previously approved on July 27, 1972 in paragraph (c)(3) of this section and now deleted without replacement: Chapter 2 (''Legal Authority''), Section 2.9 (''Jurisdiction over Indian lands''); Arizona Revised Statutes sections 36–1700 (''Declaration of Policy'') and 36–1801 (''Jurisdiction over Indian Lands''); and Arizona State Department of Health, Rules and Regulations for Air Pollution Control 7–1–4.3 (''Sulfite Pulp Mills'') and 7–1–9.1 (''Policy and Legal Authority'').

(4) Transportation control plan submitted on April 11, 1973, by the Governor.

(5) Amendments (Non-regulatory) to the transportation control plan submitted on May 10, 1973, by the Governor.

(6) Arizona Air Pollution Control Regulations (numbers in parentheses indicate recodification of regulations as identified in the Arizona State Implementation Plan Semi-Annual Report submitted to EPA on September 4, 1975).

7–1–1.1 (R9–3–101) (Policy and Legal Authority)
7–1–1.3 (R9–3–103) (Air Pollution Prohibited)
7–1–1.5 (R9–3–105) (Enforcement)
7–1–4.3 (R9–3–403) (Sulfur Emissions: Sulfite Pulp Mills)
7–1–4.4 (R9–3–404) (Sulphur Emissions: Sulfuric Acid Plants)
7–1–4.5 (R9–3–405) (Sulphur Emissions: Other Industries)
7–1–5.1 (R9–3–501) (Storage of Volatile Organic Compounds)
7–1–5.2 (R9–3–502) (Loading of Volatile Organic Compounds)
7–1–5.3 (R9–3–503) (Organic Compound Emissions: Pumps and Compressors)
7–1–5.4 (R9–3–504) (Organic Solvents)
7–1–6.1 (R9–3–601) (Carbon Monoxide Emissions: Industrial)
7–1–7.1 (R9–3–701) (Nitrogen Oxide Emissions: Fuel Burning Installations)
7–1–7.2 (R9–3–702) (Nitrogen Oxide Emissions: Nitric Acid Plants
7–1–8.3 (R9–3–803) (New Installations)

Submitted on August 20, 1973.

(i) Arizona State Department of Health.

(A) Previously approved on July 31, 1978 in paragraph (c)(6) of this section and now deleted without replacement: Arizona Air Pollution Control Regulation 7–1–4.3 (R9–3–403) (''Sulfur Emissions: Sulfite Pulp Mills'').

(7) Revised transportation control plan submitted on September 11, 1973, by the Governor.

(8) Letter supplementing the revised transportation control plan encouraging mass transit, carpooling, etc., submitted on September 21, 1973, by the Governor.

(9) Letter supplementing the revised transportation control plan encouraging mass transit, carpooling, etc., submitted on October 2, 1973, by the Governor.

(10) Maricopa County Air Pollution Control District Regulation III, Rule 31 (Particulate Matter Emissions) submitted on January 28, 1974.

(11) Arizona Air Pollution Control Regulation 7–1–1.7 (R9–3–107) (Unlawful open burning) submitted on February 19, 1974.

(12) Pima County Air Pollution Control District Regulation II, Rule 2 (Particulate matter emissions) submitted on March 19, 1974.

(13) Air quality maintenance area designation analysis submitted on April 17, 1974, by the Arizona Department of Health Services.

(14) Arizona Air Pollution Control Regulations:

7–1–2.10 (R9–3–210) (Emergency Episode Criteria)
7–1–4.2 (R9–3–402) (Sulfur Emissions: Fuel Burning Installations)

Submitted on August 30, 1974.

(15) Arizona Air Pollution Control regulations 7–1–8.1 (R9–3–801) (Original State jurisdiction); 7–1–8.2 (R9–3–802) (Assertions of jurisdiction); 7–1–8.3 (R9–3–803) (Delegation of authority); 7–1–11.3 (R9–3–1203) (Suspension and revocation of permits); 7–1–11.4 (R9–3–1204) (Permits non-transferable); 7–1–11.5 (R9–3–1205) (Posting of permits); 7–1–11.6 (R9–3–1206) (Notice by permit agencies); 7–1–11.7 (R9–3–1207) (Equipment

covered); 7–1–11.9 (R9–3–1209) (Permit Fees); and 7–1–1.4 (R9–3–104) (Recordkeeping and reporting) submitted September 27, 1974.

(16) Assertion of State Jurisdiction over Apache, Navajo, Santa Cruz and Yavapai Counties; Assertion of State Jurisdiction over Cochise County; and Assertion of State Jurisdiction over specific sources in Mohave County.

Submitted on February 3, 1975.

(17) Amendments to the Rules and Regulations of the Pima County Air Pollution Control District (Regulation I: Rules 2, 4D, 4E, 4J, 8G, 16C, 29, and 30) submitted on February 20, 1975, by the Director, Arizona Department of Health Services (the Governor's official representative).

(18) Air pollution control regulations for various counties submitted by the Governor on July 1, 1975, as follows:

(i) Coconino County Air Pollution Control Regulations.

12–1–1 (Legal Authority)
12–1–2 (Definitions)
12–1–3 (Air Pollution Prohibited)
12–2–2 (Operating Permits)
12–2–4 (Permit Fees)
12–2–5 (Permit Renewals)
12–2–7 (Testing of Installations)
12–2–8 (Compliance with Terms of Installation Permit)
12–2–9 (Notification of Denial of Permit)
12–2–10 (Appeals to the Hearing Board)
12–2–11 (Permits Not Transferable)
12–2–12 (Expiration of Installation Permit)
12–2–13 (Posting of Permits)
12–3–1 (Ambient Air Quality Standards)
12–3–2 (Emission Standards)
12–3–3 (Reporting of Emissions)
12–3–4 (Production of Records: Confidentiality)
12–3–5 (Monitoring Devices)
12–3–6 (Penalty for Violation)
12–4–1 (Shade, Density, or Opacity of Emissions)
12–4–2 (Dust Control)
12–4–3 (Processing of Animal or Vegetable Matter)
12–4–4 (Volatile and Odorous Materials)
12–4–5 (Storage and Handling of Petroleum Products)
12–5–1 (Permit Required)
12–5–2 (Performance Tests: Permit Tags)
12–5–3 (Emission Limitations)
12–5–4 (Authority of Other Public Agencies)
12–6–1 (Unlawful Open Burning)
12–6–2 (Exceptions Requiring no Permission)
12–6–3 (Exceptions Requiring Permission)
12–6–4 (Exceptions Under Special Circumstances)
12–7–1 (Misdemeanor: Penalty)
12–7–2 (Order of Abatement)
12–7–3 (Hearings on Orders of Abatement)
12–7–5 (Notice of Hearing; Publication; Service)
12–7–6 (Injunctive Relief)

(A) Previously approved on November 15, 1978 and now deleted without replacement Rules 12–7–2, 12–7–3, 12–7–5, and 12–7–6.

(B) Previously approved on November 15, 1978 in paragraph (i) of this section and now deleted without replacement Rules 12–1–1 through 12–1–3, 12–2–2, 12–2–4, 12–2–5, 12–2–7 through 12–2–13, 12–3–1, 12–3–3 through 12–3–6, 12–4–1 through 12–4–5, 12–5–1 through 12–5–4, 12–6–1 through 12–6–4, and 12–7–1.

(ii) Mohave County Air Pollution Control Regulations.

Sec. 1, Reg. 1 (Policy and Legal Authority)
Sec. 1, Reg. 2 (Definitions)
Sec. 1, Reg. 3 (Air Pollution Prohibited)
Sec. 1, Reg. 4 (Enforcement)
Sec. 2, Reg. 1 (Shade, Density or Opacity of Emissions)
Sec. 2, Reg. 2 (Particulate Matter)
Sec. 2, Reg. 3 (Reduction of Animal or Vegetable Matter)
Sec. 2, Reg. 4 (Evaporation and Leakage)
Sec. 2, Reg. 5 (Storage Tanks)
Sec. 3, Reg. 1 (Particulate Matter from Fuel Burning Installations)
Sec. 3, Reg. 2 (Particulate Matter from Other Sources)
Sec. 3, Reg. 3 (Sulfur from Primary Copper Smelters)
Sec. 3, Reg. 4 (Ground Level Concentrations)
Sec. 3, Reg. 5 (Exceptions)
Sec. 3, Reg. 6 (Incinerators)
Sec. 4, Reg. 1 and Reg. 2 (Responsibility and Requirements of Testing)
Sec. 5, Reg. 1 (Open Fires: Prohibition and Exceptions)
Sec. 6, Reg. 1 (Sulfur Dioxide)
Sec. 6, Reg. 2 (Non-Specific Particulate)
Sec. 6, Reg. 3 (Evaluation)
Sec. 6, Reg. 4 (Anti-Degradation)
Sec. 7 (Violations)

(A) Previously approved on November 15, 1978 in paragraph (ii) of this section and now deleted without replacement Rules 1–1 through 1–4, 2–1 through 2–5, 3–1, 3–2, 3–6, 4–1, 4–2, 5–1, 6–1 through 6–4, and 7.

(iii) Yuma County Air Pollution Control Regulations.

8–1–1.1 (Policy and Legal Authority)
8–1–1.2 (Definitions)
8–1–1.3 (Air Pollution Prohibited)
8–1–1.4 (Recordkeeping and Reporting)

8–1–1.5 (Enforcement)
8–1–1.6 (Exceptions)
8–1–2.1 (Non-Specific Particulate)
8–1–2.2 (Sulfur Dioxide)
8–1–2.3 (Non-Methane Hydrocarbons)
8–1–2.4 (Photochemical Oxidants)
8–1–2.5 (Carbon Monoxide)
8–1–2.6 (Nitrogen Dioxide)
8–1–2.7 (Evaluation)
8–1–2.10 (Emergency Episode Criteria)
8–1–3.1 (Visible Emissions; General)
8–1–3.2 (Fugitive Dust)
8–1–3.3 (Particulates—Incineration)
8–1–3.4 (Particulates—Wood Waste Burners)
8–1–3.5 (Particulates—Fuel Burning Equipment)
8–1–3.6 (Particulates—Process Industries)
8–1–4.2 (Fuel Burning Installations)
8–1–4.3 (Sulfur Emissions—Sulfite Pulp Mills)
8–1–4.4 (Sulfur Emissions—Sulfuric Acid Plants)
8–1–4.5 (Sulfur Emissions—Other Industries)
8–1–5.1 (Storage of Volatile Organic Compounds)
8–1–5.2 (Loading of Volatile Organic Compounds)
8–1–5.3 (Pumps and Compressors)
8–1–5.4 (Organic Solvents; Other Volatile Compounds)
8–1–6.1 (CO_2 Emissions—Industrial)
8–1–7.1 (NO_2 Emissions—Fuel Burning Equipment)
8–1–7.2 (NO_2 Emissions—Nitric Acid Plants)
8–1–8.1 (Open Burning—Prohibition)
8–1–8.2 (Open Burning—Exceptions)

(A) Previously approved on November 15, 1978 in paragraph (iii) of this section and now deleted without replacement Rules 8–1–1.1, 8–1–2.7, 8–1–2.10, 8–1–4.2 through 8–1–4.5, 8–1–5.1 through 8–1–5.4, 8–1–6.1, 8–1–7.1, 8–1–7.2, 8–1–8.1, and 8–1–8.2.

(iv) Pinal-Gila Counties Air Pollution Control Regulations.

7–1–1.1 (Policy and Legal Authority)
7–1–1.2 (Definitions)
7–1–1.3 (Air Pollution Prohibited)
7–1–2.2 (Permit Unit Description and Fees)
7–1–2.4 (Appeals to Hearing Board)
7–1–2.5 (Transfer: Posting: Expirations)
7–1–2.6 (Recordkeeping and Reporting)
7–1–2.7 (Enforcement)
7–1–2.8 (Exceptions)
7–1–4.1 and 7–1–4.2 (Orders of Abatement)
7–1–5.1 (Classification and Reporting: Production of Records: Violation: and Penalty)
7–1–5.2 (Special Inspection Warrant)
7–1–5.3 (Decisions of Hearing Boards: Subpoenas)
7–1–5.4 (Judicial Review: Grounds: Procedures)
7–1–5.5 (Notice of Hearing: Publication: Service)
7–1–5.6 (Injunctive Relief)
7–2–1.1 (Non-Specific Particulate)
7–2–1.2 (Sulfur Dioxide)
7–2–1.3 (Non-Methane Hydrocarbons)
7–2–1.4 (Photochemical Oxidants)
7–2–1.5 (Carbon Monoxide)
7–2–1.6 (Nitrogen Dioxide)
7–2–1.7 (Evaluation)
7–2–1.8 (Anti-Degradation)
7–3–1.1 (Visible Emissions: General)
7–3–1.2 (Particulate Emissions—Fugitive Dust)
7–3–1.3 (Open Burning)
7–3–1.4 (Particulate Emissions—Incineration)
7–3–1.5 (Particulate Emissions—Wood-Waste Burners)
7–3–1.6 (Reduction of Animal or Vegetable Matter)
7–3–1.7 (Particulate Emissions—Fuel Burning Equipment)
7–3–1.8 (Particulate Emissions—Process Industries)
7–3–2.1 (Copper Smelters)
7–3–2.2 (SO_2 Emissions—Fuel Burning Installations)
7–3–2.3 (SO_2 Emissions—Sulfite Pulp Mills)
7–3–2.4 (SO_2 Emissions—Sulfuric Acid Plants)
7–3–2.5 (Other Industries)
7–3–3.1 (Storage of Volatile Organic Compounds)
7–3–3.2 (Loading of Volatile Organic Compounds)
7–3–3.3 (Pumps and Compressors)
7–3–3.4 (Organic Solvents: Other Volatile Compounds)
7–3–4.1 (CO_2 Emissions—Industrial)
7–3–5.1 (NO_2 Emissions—Fuel Burning Equipment)
7–3–5.2 (NO_2 Emissions—Nitric Acid Plants)
7–3–6.1 (Policy and Legal Authority)

(A) Previously approved on November 15, 1978 and now deleted without replacement Rules 7–1–4.1 to 7–1–4.2 and 7–1–5.1 to 7–1–5.6.

(B) Previously approved on November 15, 1978 and now deleted without replacement Rules 7–1–2.2, 7–1–2.4, 7–1–2.7, 7–2–1.3, and 7–3–6.1.

(C) Previously approved on December 17, 1979 and now deleted without replacement Rule 7–3–2.5.

(D) Previously approved on November 15, 1978 in paragraph (c)(18)(iv) of this section and now deleted without replacement Rules 7–1–1.1, 7–1–1.3, 7–1–2.5, 7–1–2.6, 7–2–1.1, 7–2–1.2, 7–2–1.4, 7–2–1.5, 7–2–1.6, 7–2–1.7, and 7–3–1.6.

(E) Previously approved on December 17, 1979 in paragraph (c)(18)(iv) of this section and now deleted without replacement Rule 7–2–1.8.

(F) Previously approved on November 15, 1978 in paragraph (c)(18)(iv) of this section and now deleted without replacement with respect to Gila County only Rules 7–3–1.2, 7–3–1.3, 7–3–1.4, 7–3–1.5, 7–3–1.7, 7–3–1.8, 7–3–2.2, 7–3–2.3, 7–3–2.4, 7–3–3.1, 7–3–3.2, 7–3–3.3, 7–3–4.1, 7–3–5.1, and 7–3–5.2.

(G) Previously approved on December 17, 1979 in paragraph (c)(18)(iv) of this section and now deleted without replacement with respect to Gila County only Rule 7–3–2.5.

(19) Arizona Air Pollution Control Regulations, submitted on September 16, 1975: R9–3–102 (Definitions), R9–3–108 (Test Methods and Procedures), R9–3–302 (Particulate Emissions: Fugitive Dust), R9–3–303 (Particulate Emissions: Incineration), R9–3–304 (Particulate Emissions: Wood Waste Burners), R9–3–305 (Particulate Emissions: Fuel Burning Equipment), R9–3–307 (Particulate Emissions: Portland Cement Plants); and R9–3–308 (Particulate Emissions: Heater-Planers), submitted on September 16, 1975.

(20) Arizona Air Pollution Control Regulations R9–3–505 (Gasoline Volatility Testing); R9–3–506 (Gasoline Volatility Standards); R9–3–1001 (Policy and Legal Authority); R9–3–1020 (State Stations Acting as Fleet Inspection Stations); any Fleet Inspection Stations for State Stations); submitted on January 23, 1976.

(i) Arizona State Department of Health.

(A) Previously approved on August 4, 1978 in paragraph (c)(20) of this section and now deleted without replacement: Arizona Air Pollution Control Regulation R9–3–1001 (''Policy and Legal Authority'').

(21) Amendments to the rules and Regulations of the Pima County Air Pollution Control District (Regulation I:

Rule 2 (paragraph uu-yy, Definitions); regulation II (Fuel Burning Equipment): Rule 2G (paragraphs 1–4c, Particulate Emissions), Rule 7A (paragraphs 1–6, Sulfur Dioxide Emissions), Rule 7B (paragraphs 1–4, Nitrogen Oxide Emission); Regulation VI: Rule 1A–H, (Ambient Air Quality Standards); Regulation VII (paragraph A–D, Standards of Performance for New Stationary Sources); and Regulation VIII (paragraphs A–C, Emission Standards for Hazardous Air Pollutants)) submitted on September 30, 1976 by the Director, Arizona Department of Health Services (the Governor's official representative).

(22)–(23) [Reserved]

(24) Arizona Air Pollution Control Regulations R9–3–1002 (Definitions); R9–3–1003 (Vehicles To Be Inspected by the Mandatory Vehicular Emissions Inspection Program); R9–3–1004 (State Inspection Requirements); R9–3–1005 (Time of Inspections); R9–3–1006 (Mandatory Vehicular Emissions Inspection); R9–3–1007 (Evidence of Meeting State Inspection Requirements); R9–3–1008 (Procedure for Issuing Certificates of Waiver); R9–3–1010 (Low Emissions Tune Up); R9–3–1011 (Inspection Report); R9–3–1012 (Inspection Procedure and Fee); R9–3–1013 (Reinspections); R9–3–1016 (Licensing of Inspectors); R9–3–1017 (Inspection of Governmental Vehicles); R9–3–1018 (Certificate of Inspection); R9–3–1019 (Fleet Station Procedures and Permits); R9–3–1022 (Procedure for Waiving Inspections Due to Technical Difficulties); R9–3–1023 (Certificate of Exemption); R9–3–1025 (Inspection of State Stations); R9–3–1026 (Inspection of Fleet Stations); R9–3–1027 (Registration of Repair Industry Analyzers); R9–3–1029 (Vehicle Emission Control Devices); and R9–3–1030 (Visible Emissions; Diesel-Powered Locomotives); submitted on February 11, 1977.

(25) [Reserved]

(26) Maricopa County Air Pollution Control District Regulation IV, rule 41, paragraph B (Continuously Monitoring and Recording Emissions) submitted on July 29, 1977.

(27) The following amendments to the plan were submitted on January 4, 1979 by the Governor's designee.

(i) Arizona State Rules and Regulations for Air Pollution Control.

(A) R–9–3–101, A., Nos. 2, 3, 29, 41, 53, 55, 87, 88, 89, 91, 92, 95, 100 and 117; R9–3–301, paragraphs D, J, and N; R9–3–306, paragraphs D and J; and R9–3–307, paragraphs C and E.

(B) New or amended Rules R9–3–101 (Nos. 1, 4, 6, (a, c, and d), 8, 9, 11, 13, 17 to 26, 28, 30 to 35, 37 to 40, 43 to 45, 48, 49, 54, 57 to 59, 61 to 73, 77 to 80, 82, 83, 86, 90, 94, 96, 98, 101, 102, 104, 105, 107 to 115, 118 to 120, 122, to 129, and 131), R9–3–217, R9–3–218, R9–3–219, R9–3–308, R9–3–310 (Paragraph C), R9–3–311 (Paragraph

A), R9–3–312, R9–3–313 (Paragraphs A.1, A.2.b, A.3, A.4, B to D.1, D.3, D.4.a to F.1.2.iii, F.1.b., and F.2.b. to F.4), R9–3–314 to R9–3–319, R9–3–402 to R9–3–404, R9–3–406, R9–3–407, R9–3–409, R9–3–410, R9–3–502 (Paragraphs B, C, C.2, and D to G), R9–3–503 (Paragraph A), R9–3–504 (Paragraphs B and C), R9–3–505 (Paragraphs A, B.1.b., B.2.b, and B.3 to D), R9–3–506 (Paragraphs A.2, B, C.1.a to C.4), R9–3–507 (Paragraphs D to F), R9–3–508 (Paragraphs A and C), R9–3–510 (Paragraphs B to E), R9–3–511 (Paragraph B), R9–3–512 (Paragraph B), R9–3–513 (Paragraphs B and C), R9–3–514 (Paragraphs B and C), R9–3–516 (Paragraph B), R9–3–517 (Paragraphs B and C), R9–3–518 (Paragraphs B and C), R9–3–519 (Paragraphs A.2, A.3.a to A.3.c, A.3.e and B to C), R9–3–520 (Paragraphs B and C), R9–3–521 (Paragraphs B to D), R9–3–522 (Paragraphs A.1 to A.5, B and C), R9–3–523 (Paragraph B), R9–3–524 (Paragraphs C, D.1, D.2, D.4 to G.5), R9–3–525 (Paragraphs B to D), R9–3–526, R9–3–527, R9–3–528 (Paragraphs B to E and F.1 to F.4), R9–3–601 to R9–3–605, R9–3–1101, R9–3–1102, Appendix 10 (Sections A10.1.3.3, A10.1.4. and A10.2.2 to A10.3.4.) and Appendix 11.

(C) Previously approved in paragraphs (c)(27)(i)(A) and (B) of this section and now deleted without replacement: R9–3–101 (all paragraphs and nos. listed), paragraph B of R9–3–217, R9–3–301 (all paragraphs listed), R9–3–306 (all paragraphs listed), R9–3–307 (all paragraphs listed), R9–3–308, R9–3–310 (Paragraph C), R9–3–311 (Paragraph A), R9–3–312, R9–3–314, R9–3–315, R9–3–316, R9–3–317, R9–3–318, R9–3–518 (Paragraphs B and C), R9–3–319, R9–3–1101, and Appendix 10 (Sections A10.1.3.3, A10.1.4 and A10.2.2 to A10.3.4).

(D) Previously approved on April 23, 1982, in paragraph (c)(27)(i)(B) of this section and now deleted without replacement: R9–3–511 (Paragraph B), R9–3–512 (Paragraph B), R9–3–513 (Paragraphs B and C), and R9–3–517 (Paragraphs B and C).

(28) The following amendments to the plan were submitted on January 18, 1979 by the Governor's designee.

(i) Maricopa County Bureau of Air Pollution Control Rules and Regulations.

(A) Rule 33, Storage and Handling of Petroleum Products.

(B) New or amended Rules 21G and 41.

(29) The following amendments to the plan were submitted on January 23, 1979, by the Governor's designee.

(i) Arizona State Rules and Regulations for Air Pollution Control.

(A) Arizona Testing Manual for Air Pollutant Emissions (excluding Sections 2.0 and 5.0).

(B) Previously approved on April 23, 1982, in paragraph (c)(29)(i)(A) of this section and now deleted without replacement: Arizona Testing Manual for Air Pollutant Emissions, Sections 3.0 and 4.0.

(30) [Reserved]

(31) Revisions to the Arizona Air Pollution Control Regulations submitted on March 21, 1979:

R9–3–1002 (22,34); R9–3–1003 [A(A8–11),B,C]; R9–3–1005 [A, (A3)]; R9–3–1006 [A,(A1,2),B, (B2,3,4,5),D,E, (E1(c),2(c)),F,G, (G1,2), Table II]; R9–3–1008 [B,(B1,2,6,7)]; R9–3–1010 [A,(A3),C,D,F]; R9–3–1011 [A,B,(B1,2,3)];R9–3–1012(b); R9–3–1014; R9–3–1017 [B,(B4), C, E]; R9–3–1019 [A,B,D, D(1)(a)(i), D(1)(a)(ii)(6), D(1)(a)(iii), D(1)(c), D(1)(f)(11), H, (H1,2), I(I8,9,10,11,12,13), J, (J10), L, M, N, (N1,2)]; R9–3–(C,E); R9–3–1022(B); R9–3c–091023(A,B); R9–3–1027(F).

(32) The following amendments to the plan were submitted on February 23, 1979 by the Governor's designee.

(i) Nonatainment Area Plan for Carbon Monoxide and Photochemical Oxidants, Maricopa County Urban Planning Area.

(33) The *Metropolitan Pima County Nonattainment Area Plan for CO* was submitted by the Governor's designee on March 20, 1979.

(34) The *Metropolitan Pima County Nonattainment Area Plan for TSP* was submitted by the Governor's designee on March 27, 1979.

(35) The following amendments to the plan were submitted on April 10, 1979, by the Governor's designee.

(i) Yuma County Air Pollution Control District.

(A) New or amended Rules 8–1–1.2 8–1–1.3 thru 8–1–1.6 and 8–1–1.8 thru 8–1–1.13; 8–1–2.1 thru 8–1–2.6 and 8–1–2.8; 8–1–3.1 thru 8–1–3.6, 8–1–3.7 (except paragraph ''F'') and 8–1–3.8 thru 8–1–3.20; and Appendices I and II.

(B) Previously approved on April 12, 1982 in paragraph (i)(A) of this section and now deleted without replacement Rules 8–1–1.2 through 8–1–1.6, 8–1–1.8

through 8–1–1.13, 8–1–2.1 through 8–1–2.6, 8–1–2.8, 8–1–3.1 through 8–1–3.20, Appendix I, and Appendix II.

(36) The following amendments to the plan were submitted on July 3, 1979 by the Governor's designee.

(i) Revision to the Nonattainment Area Plan for Carbon Monoxide and Photochemical Oxidants, Maricopa County Urban Planning Area.

(37) The following amendments to the plan were submitted on September 20, 1979 by the Governor's designee.

(i) Arizona State Rules and Regulations for Air Pollution Control.

(A) New or amended rule R9–3–515 (Paragraphs C.1.a. to C.1.h.; C.2; C.3, C.3.b., C.3.c., and C.3.h.; C.4.c. to C.4.g. and C.4.i.; C.5 and C.5.b. to C.5.d.; C.6.b.i. to C.6.b.iii., C.6.b.vi., C.6.b.vii., and C.6.c.; and C.8.).

(ii) ''ASARCO Incorporated, Hayden Copper Smelter, State Implementation Plan Determination of Good Engineering Practice Stack Height,'' September 17, 1979, issued by ADHS.

(38) The following amendment to the plan were submitted on October 9, 1979, by the Governor's designee.

(i) Pima County Health Department.

(A) New or amended Regulation 10: Rules 101–103; Regulation 11: Rules 111–113; Regulation 12: Rules 121–123; Regulation 13: Rules 131–137; Regulation 14: Rules 141 and 143–147; Regulation 15: Rule 151; Regulation 16: Rules 161–165; Regulation 17: Rules 172–174; Regulation 18: Rules 181 and 182; Regulation 20: Rules 201–205; Regulation 21: Rules 211–215; Regulation 22: Rules 221–226; Regulation 23: Rules 231–232; Regulation 24: Rules 241 and 243–248; Regulation 25: Rules 251 and 252; Regulation 30: Rules 301 and 302; Regulation 31: Rules 312–316 and 318; Regulation 32: Rule 321; Regulation 33: Rules 331 and 332; Regulation 34: Rules 341–344; Regulation 40: Rules 402 and 403; Regulation 41: 411–413; Regulation 50: Rules 501–503 and 505–507; Regulation 51: Rules 511 and 512; Regulation 60: Rule 601; Regulation 61: Rule 611 (Paragraph A.1 to A.3) and Rule 612; Regulation 62: Rules 621–624; Regulation 63: Rule 631; Regulation 64: Rule 641; Regulation 70: Rules 701–705 and 706 (Paragraphs A to C, D.3, D.4, and E); Regulation 71: Rules 711–714; Regulation 72: Rules 721 and 722; Regulation 80: Rules 801–804; Regulation 81: Rule 811; Regulation 82: Rules 821–823; Regulation 90: Rules 901–904; Regulation 91: Rule 911 (except Methods 13–A, 13–B, 14, and 15), and Rules 912 and 913; Regulation 92: Rules 921–924; and Regulation 93: Rules 931 and 932.

(*1*) Previously approved on April 16, 1982 in paragraph (c)(38)(i)(A) of this section and now deleted from the SIP without replacement Pima County Health Department Regulations: Regulation 13: Rules 131–137; Regulation 16: Rule 164; Regulation 18: Rules 181 and 182; Regulation 20: Rule 205; Regulation 21: Rule 214; and Regulation 24: Rules 245–248.

(B) New or amended Regulation 17: Rule 171, paragraphs B.1, B.1.a, B.7, B.8, C.1.a, C.1.b, C.2.a, C.2.c, C.2.d, C.3.a, and E.1.b; Regulation 42: Rules 421, 422, 423, 424, 425, and 426; and Regulation 50: Rule 504.

(C) Previously approved on April 16, 1982 and now deleted without replacement Rules 141, 143 to 147, 702, 711 to 714.

(39) The following amendments to the plan were submitted on November 8, 1979 by the Governor's designee.

(i) Nonattainment Area Plan for Total Suspended Particulates, Maricopa County Urban Planning Area.

(40) [Reserved]

(41) The following amendments to the plan were submitted on February 15, 1980, by the Governor's designee.

(i) 1.0 Air Quality Surveillance Network.

(42) The *Technical Basis of New Source Review Regulations, Pima County, Arizona, February 6, 1980* (AQ–125–a) was submitted by the Governor's designee on February 28, 1980.

(43) The following amendments to the plan were submitted on April 1, 1980 by the Governor's designee.

(i) Arizona State Rules and Regulations for Air Pollution Control.

(A) R9–3–101, A., Nos. 7, 27, 46, 52, 54, 72, 73, 74, 81, 84, 85, 86, 88, 89, 92, 96, 97, 98, 111, 117, 118, and 122; R9–3–301, paragraphs B–1, B–2, C, E, F, H, I, J, K, M, N, O, P, and Q; R9–3–302, (except paragraphs D, E, and I); R9–3–303; R9–3–306, paragraphs B–2, C–1, C–3, and C–5 to C–7, E, F, G–1, G–3, G–4, H, and I; and R9–3–307, paragraphs A, B, D, and F.

(B) New or amended Rules R9–3–101 (Nos. 5, 15, 16, 42, 49, 51, 55, 94, 101, 103,

106, 126, 127, and 133), R9–3–201 (paragraph D.2), R9–3–202 (Paragraph D.2), R9–3–203 (Paragraph D.2), R9–3–204 (Paragraph C.2), R9–3–205 (Paragraph C.2), R9–3–206 (Paragraph C.2), R9–3–207 (Paragraph C.2), R9–3–313 (Paragraph F.1.a.i and ii), R9–3–401, R9–3–405, R9–3–408, R9–3–501 (Paragraph A to C), R9–3–502 (Paragraph A to A.4), R9–3–503 (Paragraphs B, C.1,C.2.a. to C.2.f., C.4 and C.5), R9–3–504 (Paragraph A.1 to A.4), R9–3–508 (Paragraph B.1 to B.6), R9–3–510 (Paragraph A.1 and A.2), R9–3–511 (Paragraph A.1 to A.5), R9–3–512 (Paragraph A.1 to A.5), R9–3–513 (Paragraph A.1 to A.5), R9–3–514 (Paragraph A.2), R9–3–516 (Paragraph A.1 to A.6), R9–3–517 (Paragraph A.1 to A.5), R9–3–518 (Paragraph A.1 to A.5), R9–3–520 (Paragraph A.1 to A.6), R9–3–521 (Paragraph A.1 to A.5), and Appendices 1 and 2.

(C) Previously approved in paragraphs (c)(43)(i)(A) and (B) of this section and now deleted without replacement: R9–3–101 (all paragraphs and nos. listed), R9–3–301 (all paragraphs listed), R9–3–302 (all paragraphs listed), R9–3–303, R9–3–306 (all paragraphs listed), R9–3–307 (all paragraphs listed), and R9–3–518 (Paragraph A.1 to A.5).

(D) Previously approved on April 23, 1982, in paragraph (c)(43)(i)(B) of this section and now deleted without replacement: R9–3–511 (Paragraph A.1 to A.5), R9–3–512 (Paragraph A.1 to A.5), R9–3–513 (Paragraph A.1 to A.5), and R9–3–517 (Paragraph A.1 to A.5).

(ii) Arizona Lead SIP Revision.

(44) The following amendments to the plan were submitted on June 23, 1980 by the Governor's designee.

(i) Maricopa County Bureau of Air Pollution Control Rules and Regulations.

(A) Rule 34, Organic Solvents.

(B) New or amended Rules 2 (except #49 and 57), 3, 24, 25, 25, 26, 27, 30, 31(A), (B), and (H), 32, (G), (H), (J), and (K), 40, 70–72, and 74 and deletion of ''ee''.

(45) The following amendments to the plan were submitted on July 17, 1980 by the Governor's designee.

(i) Arizona State Rules and Regulations for Air Pollution Control.

(A) R–9–3–101, A., Nos. 73, 74, 75, 83, 86, 87, 88, 90, 91, 94, 98, 99, 100, 113, 119, 120, and 124; R9–3–301, paragraphs A, B–3, G, I, J, K, L, M, N, O, P, Q, and R; R9–3–306, paragraphs A, B–1, B–3, B–4, C–2, C–4, and G–2; and R9–3–320, paragraphs B and C.

(B) New or amended Rules R9–3–101 (Nos. 6(b), 10, 12, 14, 36, 50, 55, 77, 84, and 92), R9–3–311 (Paragraph B), R9–3–313 (Paragraphs A.2.a., D.2, D.4, F.1.C, and F.2.a.), R9–3–320 (Paragraph A), R9–3–502 (Paragraph C.1), R9–3–503 (Paragraph C, C.2, C.2.g. and C.3), R9–3–504 (Paragraph A), R9–3–505 (Paragraph B.1.a, B.2.a), R9–3–506 (Paragraph A to A.1), R9–3–507 (Paragraphs A to C), R9–3–508 (Paragraph B), R9–3–509, R9–3–510 (Paragraph A), R9–3–511 (Paragraph A), R9–3–512 (Paragraph A), R9–3–513 (Paragraph A), R9–3–514 (Paragraphs A to A.1), R9–3–516 (Paragraph A), R9–3–517 (Paragraph A), R9–3–518 (Paragraph A), R9–3–519 (Paragraph A to A.1, A.3, and A.3.d), R9–3–520 (Paragraph A), R9–3–521 (Paragraph A), R9–3–522 (Paragraph A), R9–3–523 (Paragraph A), R9–3–524 (Paragraphs A, B, D, and D.3), R9–3–525 (Paragraph A), R9–3–528 (Paragraphs A and F.5), Section 3, Method 11; Section 3.16, Method 16; Section 3.19, Method 19; Section 3.20, Method 20; and Appendix 10 (Sections A10.2 and A10.2.1).

(C) New or amended Rule R9–3–515 (Paragraphs A; and C.6, C.6.b, and C.6.b.v.).

(D) Previously approved in paragraphs (c)(45)(i)(A) and (B) of this section and now deleted without replacement: R9–3–101 (all paragraphs and nos. listed), R9–3–301 (all paragraphs listed), R9–3–306 (all paragraphs listed), R9–3–311 (all paragraphs listed), R9–3–509, and Appendix 10 (Sections A10.2 and A10.2.1).

(E) Previously approved on April 23, 1982, in paragraph (c)(45)(i)(B) of this section and now deleted without replacement: R9–3–511 (Paragraph A); R9–3–512 (Paragraph A); R9–3–513 (Paragraph A); R9–3–517 (Paragraph A); Section 3, Method 11; Section 3.16, Method 16; Section 3.19, Method 19; and Section 3.20, Method 20.

(46) The following amendments to the plan were submitted on August 7, 1980, by the Governor's designee.

(i) Pinal-Gila Counties Air Quality Control District.

(A) New or amended Rules 7–1–1.2, 7–1–1.3(C), 7–3–1.1, 7–3–1.4(C), 7–3–1.7(F), and 7–3–3.4.

(B) Previously approved on April 12, 1982 in paragraph (c)(46)(i)(A) of this section and now deleted without replacement Rules 7–1–1.2 and 7–1–1.3(C).

(C) Previously approved on April 12, 1982 in paragraph (c)(46)(i)(A) of this section and now deleted without replacement with respect to Gila County only Rules 7–3–1.1, 7–3–1.4(C), 7–3–1.7(F), and 7–3–3.4.

(D) Previously approved on April 12, 1982 in paragraph (c)(46)(i)(A) of this section and now deleted without replacement with respect to Pinal County only Rule 7–3–3.4.

(47) The following amendments to the plan were submitted on September 10, 1980, by the Governor's designee.

(i) Arizona State Rules and Regulations and Air Pollution Control.

(A) New or amended Rules R9–3–101 (Nos. 24, 55, 102, and 115 (25–54, 56–101, 103–114, and 116–140 are renumbered only), R9–3–201 (Paragraphs A to D.1 and E), R9–3–202 (Paragraphs A to D.1 and E), R9–3–203 (Paragraphs A to D.1 and E), R9–3–204 (Paragraphs A to C.1 and D), R9–3–205 (Paragraphs A to C.1 and D), R9–3–206 (Paragraphs A to C.1 and D), R9–3–207 (Paragraphs A to C.1 and D), and R9–3–216.

(*1*) Previously approved in this paragraph (c)(47)(i)(A) and now deleted without replacement: R9–3–101 (all paragraphs and nos. listed).

(48) Arizona Lead SIP Revision submitted by the State on September 26, 1980.

(49) The following amendments to the plan were submitted on July 13, 1981 by the Governor's designee.

(i) Arizona Revised Statute Sec. 36–1718.

(50) The following amendments to the plan were submitted on July 13, 1981, by the Governor's designee.

(i) Arizona State Rules and Regulations for Air Pollution Control.

(A) New or amended Rules R9–3–310 (Paragraphs A and B), R9–3–501 (Paragraph D), R9–3–503 (Paragraph C.6), R9–3–506 (Paragraph C to C.1), and Appendix 10 (Sections A10.1–A10.1.3.2).

(B) New or amended Rule R9–3–515 (Paragraph C.4.a. and C.4.b.).

(C) Previously approved in paragraph (c)(50)(i)(A) of this section and now deleted without replacement: R9–3–310 (Paragraphs A and B) and Appendix 10 (Sections A10.1–A10.1.3.2).

(ii) Arizona Revised Statutes.

(A) Arizona County: Chapter 6, Article 8. Air Pollution, Sections 36–770 to 36–778, 36–779 to 36–779.07, 36–780, 36–780.01, 36–781 to 36–783, 36–784 to 36–784.04, 36–785, 36–785.01, 36–786 to 36–788, 36–789 to 36–789.02, 36–790, and 36–791.

(*1*) Previously approved on June 18, 1982 in paragraph (c)(50)(ii)(A) of this section and now deleted from the SIP without replacement Arizona Revised Statutes: sections 36–770, 36–776, and 36–777.

(B) Arizona State: Chapter 14, Air Pollution, Article 1. State Air Pollution Control, Sections 36–1700 to 36–1702, 36–1704 to 36–1706, 36–1707 to 36–1707.06, 36–1708, 36–1720.01, and 36–1751 to 36–1753.

(C) Previously approved on June 18, 1982 and now deleted without replacement Statutes 36–781, 36–782, 36–784, 36–784.01 to 36–784.04, 36–785, 36–785.01, and 36–786 to 36–788.

(D) Previously approved on June 18, 1982, in paragraph (c)(50)(ii)(B) of this section and now deleted without replacement: Arizona Revised Statutes section 36–1700.

(51) The following amendments to the plan were submitted on June 1, 1981, by the Governor's designee.

(i) Pima County Health Department.

(A) New or amended Regulation 14: Rule 142; Regulation 20: Rule 204; Regulation 24: Rule 242; Regulation 26: Rule 261; Regulation 50: Rule 504; Regulation 61: Rule 611 (Paragraph A); Regulation 70: Rule 706 (Paragraphs D.1 and D.2); and Regulation 91: Rule 911 (Methods 19 and 20).

(B) Previously approved on April 16, 1982 and now deleted without replacement Rule 142.

(52) The following amendments to the plan were submitted on August 5, 1981, by the Governor's designee.

(i) Arizona State Rules and Regulations for Air Pollution Control.

(A) New or amended Rules R9–3–1002, R9–3–1003, R9–3–1005, R9–3–1006, R9–3–1008, R9–3–1010 to R9–3–1014, R9–3–1016, R9–3–1019, R9–3–1023, R9–3–1025, R9–3–1027, and R9–3–1030.

(ii) Arizona Revised Statutes.

(A) Inspection and Maintenance—Chapter 14, Article 3. Annual Emissions

Inspection of Motor Vehicles, Sections 36–1771 to 36–1775, 36–1708.01, 36–1709 to 36–1711, 36–1712 to 36–1712.04, 36–1713, 36–1713.01, 36–1714 to 36–1717, 36–1718, 36–1718.01, 36–1719, 36–1720, and 36–1776 to 36–1780.

(B) Previously approved on June 18, 1982 and now deleted without replacement Statutes 36–1709 to 36–1712, 36–1712.01 to 36–1712.04, 36–1713, 36–1713.01, and 36–1714 to 36–1716.

(53) The following amendments to the plan were submitted on March 8, 1982, by the Governor's designee.

(i) Maricopa County Bureau of Air Pollution Control Rules and Regulations.

(A) Rules 2 (Nos. 11 and 33, and deletion of Nos. 18, 49, 50, 52, and 54), 28 and 33.

(ii) The Improvement Schedules for Transit System and Rideshare Program in Metropolitan Pima County.

(54) The following amendments to the plan were submitted on June 3, 1982 by the Governor's designee.

(i) Arizona State Rules and Regulations for Air Pollution Control.

(A) New or amended Rule R9–3–515 Paragraphs C to C.1. and C.1.i.; C.3.a. and C.3.d. to C.3.g.; C.4. and C.4.h.; C.5.a.; C.6.a. and C.6.b.iv.; and C.9.).

(B) New or amended rules R9–3–101 (Nos. 3, 7, 8, 17, 18, 19, 20, 21, 29, 34, 35, 37, 56, 61, 62, 63, 68, 69, 75, 77, 78, 79, 88, 89, 90, 91, 98, 99, 101, 117, 122, 129, 133, 136, 146, and 157; 53 and 123 are deleted); R9–3–217; R9–3–301; R9–3–304; R9–3–305; R9–3–306 (paragraph A only); R9–3–320 (Repealed and Reserved); R9–3–1101 (paragraphs A, C, and D); Appendix 1; and Appendix 2.

(C) New or amended rules R9–3–101 (Nos. 4 to 6, 9 to 16, 22 to 28, 30 to 33, 36, 38 to 55, 57 to 60, 64 to 67, 70 to 74, 76, 80 to 87, 92 to 97, 100, 102 to 116, 118 to 121, 123 to 128, 130 to 132, 134, 135, 137 to 141, 142 to 145, 147 to 156, and 158 are renumbered only); R9–3–219; R9–3–502 (paragraph A to A.1 and A.2); R9–3–505 (paragraph B to B.1, B.2, B.3, and B.4); R9–3–508 (paragraph B to B.1, B.2, and B.5); R9–3–511 (paragraph A to A.1 and A.2); R9–3–513 (paragraph A to A.1 and A.2); R9–3–516 (paragraph A to A.1 and A.2); R9–3–517 (paragraph A to A.1); R9–3–518 (paragraph A to A.1 and A.2); R9–3–520 (paragraph A to A.1 and A.2); R9–3–521 (paragraph A to A.1 and A.2); R9–3–522 (paragraph A to A.1 and A.2); and Appendix 8 (Sections A8.3.1 and A8.3.2).

(D) New or amended rules R9–3–302 (paragraphs A–H); and R9–3–303 (paragraphs A to C and E to I), adopted on May 26, 1982.

(E) Previously approved in paragraphs (c)(54)(i)(B) and (c)(54)(i)(C) of this section and now deleted without replacement: R9–3–101 (all nos. listed except no. 20).

(F) Previously approved on September 28, 1982, in paragraph (54)(i)(C), and now deleted without replacement: R9–3–219.

(G) Previously approved on September 28, 1982, in paragraph (c)(54)(i)(C) of this section and now deleted without replacement: R9–3–518 (paragraphs A to A.1 and A.2).

(H) Previously approved in paragraphs (c)(54)(i)(B), (C), and (D) of this section and now deleted without replacement: R9–3–301 (all paragraphs except paragraphs I and K), R9–3–302 (all paragraphs listed), R9–3–303 (all paragraphs listed), R9–3–304 (all paragraphs except paragraph H), R9–3–305, R9–3–306 (paragraph A only), and R9–3–1101 (all paragraphs listed).

(I) Previously approved on September 28, 1982, in paragraph (c)(54)(i)(C) of this section and now deleted without replacement: R9–3–511 (Paragraph A to A.1 and A.2), R9–3–513 (Paragraph A to A.1 and A.2), and R9–3–517 (Paragraph A to A.1).

(55) The following amendments to the plan were submitted by the Governor's designee on March 4, 1983.

(i) *Incorporation by reference.* (A) Maricopa County Health Department, Bureau of Air Quality Control.

(*1*) New or amended rule 21.0:A-C, D.1.a-d, and E adopted on October 25, 1982.

(56) The following amendments to the plan were submitted on February 3, 1984, by the Governor's designee.

(i) Arizona State Rules and Regulations for Air Pollution Control.

(A) New or amended rules R9–101 (Nos. 98 and 158), R9–3–201 to R9–3–207, R9–3–215, R9–3–218, R9–3–310, R9–3–322, R9–3–402, R9–3–404, R9–3–502, R9–3–515 (paragraph C.3., C.5., and C.6.b.v.), R9–3–529, R9–3–1101, and Appendices 1 and 11.

(B) New or amended rules R9–3–101, Nos. 135 and 157, adopted on September 19, 1983.

(C) Previously approved in paragraphs (c)(56)(i)(A) and (B) of this section and now deleted without replacement: R9–3–101 (Nos. 135 and 157), R9–3–218, R9–3–310, R9–3–322, R9–3–1101 and Appendix 11.

(57) The following amendments to the plan were submitted by the Governor's designee on April 17, 1985.

(i) *Incorporation by reference.* (A) Maricopa County Health Department, Bureau of Air Quality Control.

(*1*) New or amended regulations: rule 21.0: D.1., D.1.e, f, and g adopted on July 9, 1984.

(58) The following amendments to the plan were submitted by the Governor's designee on October 18, 1985.

(i) *Incorporation by reference.* (A) Pima County Health Department.

(*1*) New or amended regulations: Regulation 16: Rule 166; Regulation 17; Rules 171 and 175; Regulation 20: Rule 202; Regulation 37: Rules 371, 372, 373, Figure 371–A, Figure 371–C, and Figure 372; and Regulation 38, Rule 381, A1, 2, 3, 4, 5, and B, adopted on December 6, 1983.

(59) The following amendments to the plan were submitted by the Governor's designee on October 24, 1985.

(i) *Incorporation by reference.* (A) Arizona Department of Health Services.

(*1*) New or amended rule R9–3–303, adopted on September 28, 1984.

(*2*) Previously approved in paragraph (c)(59)(i)(A)(*1*) of this section and now deleted without replacement: R9–3–303.

(60) The following amendments to the plan were submitted by the Governor's designee on October 5, 1987.

(i) *Incorporation by reference.* (A) Arizona Department of Health Services.

(*1*) New or amended rules R9–3–1001 (Nos. 8, 25, 33, 34, 38, 39, 40, and 43, No. 8), R9–3–1003, R9–3–1005, R9–3–1006, R9–3–1008, R9–3–1009, R9–3–1010, R9–3–1011, R9–3–1013, R9–3–1016, R9–3–1018, R9–3–1019, R9–3–1025, R9–3–1026, R9–3–1027, R9–3–1028, R9–3–1030, and R9–3–1031, adopted on December 23, 1986.

(*2*) Previously approved and now removed (without replacement), Rule R9–3–1014.

(B) The Maricopa Association of Governments (MAG) 1987 Carbon Monoxide (CO) Plan for the Maricopa County Area, MAC CO Plan Commitments for Implementation, and Appendix A through E, Exhibit 4, Exhibit D, adopted on July 10, 1987.

(61) The following amendments to the plan were submitted by the Governor's designee on January 6, 1988.

(i) *Incorporation by reference.* (A) The 1987 Carbon Monoxide State Implementation Plan Revision for the Tucson Air Planning Area adopted on October 21, 1987.

(62) The following amendments to the plan were submitted by the Governor's designee on March 23, 1988.

(i) *Incorporation by reference.* (A) Arizona Revised Statutes.

(*1*) Senate Bill 1360: Section 6: ARS 15–1444–C (added), Section 7: QRS 15–1627–F (added), Section 21: ARS 49– 542–A (amended, Section 21: ARS 49–542–E (added), Section 21: ARS 49–542–J.3.(b) (amended), and Section 23: ARS 49–550–E (added), adopted on May 22, 1987.

(*2*) Senate Bill 1360: Section 2: ARS 9-500.03 (added), Section 14: ARS 41–796.01 (added); Section 17: 49–454 (added), Section 18: 49–474.01 (added), and Section 25: ARS 49–571 (added), adopted on May 22, 1987.

(63) The following amendments to the plan were submitted by the governor's designee on May 26, 1988:

(i) *Incorporation by reference.* (A) Travel reduction ordinances for Pima County: Inter governmental Agreement (IGA) between Pima County, City of Tucson, City of South Tucson, Town of Oro Valley and Town of Marana, April 18, 1988; Pima County Ordinance No. 1988–72, City of Tucson ordinance No. 6914, City of South Tucson Resolutions No. 88–01, 88–05, Town of Oro Valley Resolutions No. 162, 326 and 327, Town of Marana Resolutions No. 88–06, 88–07 and Ordinance No. 88.06.

(64) The following amendments to the plan were submitted by the Governor's designee on June 1, 1988.

(i) *Incorporation by reference.* (A) Letter from the Arizona Department of Environmental Quality, dated June 1, 1988, committing to administer the provisions of the Federal New Source Review regulations consistent with EPA's requirements. The commitments apply to the issuance of, or revision to, permits for any source which is a major

stationary source or major modification as defined in 40 Code of Federal Regulations, part 51, subpart I.

(65) The following amendments to the plan were submitted by the Governor's designee on July 18, 1988.

(i) *Incorporation by reference.* (A) Arizona Revised Statutes.

(*1*) House Bill 2206, Section 2: ARS 15–1627 (amended); Section 6: Title 28, ARS Chapter 22, Article 1, ARS 28–2701, ARS 28–2702, ARS 28–2703, ARS 28–2704, and ARS 28–2705 (added); Section 7: ARS 41.101.03 (amended); Section 9: ARS 41–2605 (amended); Section 10: ARS 41–2066 (amended); Section 11: ARS 41–2083 (amended); Section 13: Title 41, Chapter 15, Article 6, ARS 41–2121: Nos. 1, 3, 4, 5, 6, 7, 8, and 9, ARS 41–2122, ARS 41–2123, ARS 41–2124 (added); Section 15: Title 49, Chapter 3, Article 1, ARS 49–403 to 49–406 (added); Section 17: Title 49, Chapter 3, Article 3, ARS 49–506 (added); Section 18; ARS 49–542 (amended); Section 19: ARS 49–550 (amended); Section 20: ARS 49–551 (amended); Section 21: Title 49, Chapter 3, Article 5, ARS 49–553 (added), Section 22: ARS 49–571 (amended); Section 23: Title 49, Chapter 3, Article 8, ARS 49–581, ARS 49–582, ARS 49–583, ARS 49–584, ARS 49–585; ARS 49–586, ARS 49–588, ARS 49–590, and ARS 49–593 (added); Section 25: Definition of major employer, Section 27: Appropriations; Section 29: Delayed effective dates, adopted on June 28, 1988.

(*2*) House Bill 2206 section 6 which added, under Arizona Revised Statutes, title 28, chapter 22, new sections 28–2701 through 28–2708, and section 13 which added, under Arizona Revised Statutes, title 41, chapter 15, Article 6 new sections 41–2125A and 41–2125B. (Oxygenated fuels program for Pima County.)

(66) The following amendments to the plan were submitted by the Governor's designee on July 22, 1988.

(i) *Incorporation by reference.* (A) Letter from the Pima County Health Department, Office of Environmental Quality, dated April 24, 1988 committing to administer the New Source Review provisions of their regulations consistent with EPA's requirements. The commitments apply to the issuance of, or revision to, permits for any source which is a major stationary source of major modification as defined in 40 Code of Federal Regulations, part 51, subpart I.

(B) Letter from Maricopa County Department of Health Services, Division of Public Health, dated April 28, 1988 and submitted to EPA by the Arizona Department of Environmental Quality July 25, 1988, committing to administer the New Source Review provisions of their regulations, consistent with EPA's requirements. These commitments apply to the issuance of, or revision to, permits for any source which is a major stationary source or major modification as defined in the Code of Federal Regulations, part 51, subpart I.

(C) Addendum to MAG 1987 Carbon Monoxide Plan for the Maricopa County Nonattainment Area, July 21, 1988 (supplemental information related to the SIP revision of July 18, 1988).

(D) Commitment in the July 22, 1988 submittal letter to apply the oxygenated fuels program of the July 18, 1988 submittal to Pima County.

(67) Regulations for the Maricopa County Bureau of Air Pollution Control were submitted on January 4, 1990 by the Governor's designee.

(i) *Incorporation by reference.* (A) Amended regulations: Regulation II, rule 220 and Regulation III, rule 335, both adopted July 13, 1988.

(B) Amended Maricopa County Division of Air Pollution Control Rule 314, adopted July 13, 1988.

(C) Amended Regulation VI, Rule 600, revised on July 13, 1988.

(D) Rules 312 and 314, adopted on July 13, 1998.

(68) The following amendments to the plan were submitted by the Governor's designee on June 11, 1991.

(i) *Incorporation by reference.* (A) Arizona Revised Statutes.

(*1*) House Bill 2181 (approved, May 21, 1991), section 1: Arizona Revised Statute (A.R.S.) 41–2065 (amended); section 2: A.R.S. 41–2083 (amended); section 3: A.R.S. section 41–2122 (amended); section 4: A.R.S. Section 41–2123 (amended); and section 5: A.R.S. section 41–2124 (repealed).

(69) The following amendment to the plan was submitted by the Governor's designee on May 27, 1994.

(i) *Incorporation by reference.* (A) *Arizona Department of Weights and Measures.* (*1*) Letter from Grant Woods, Attorney General, State of Arizona, to John U. Hays, Director, Department of Weights and Measures, dated August 31, 1993, and enclosed Form R102 (''Certification of Rules and Order of Rule Adoption'').

(*2*) Arizona Administrative Code, Article 9 (''Gasoline Vapor Control''), Rules R4–31–901 through R4–31–910, adopted August 27, 1993, effective (for state purposes) on August 31, 1993.

(70) New and amended regulations for the Maricopa County Environmental Services Department—Air Pollution Control were submitted on June 29, 1992, by the Governor's designee.

(i) *Incorporation by reference.* (A) New Rules 337, 350, and 351, adopted on April 6, 1992.

(71) New and amended regulations for the following agencies were submitted on August 15, 1994 by the Governor's designee.

(i) *Incorporation by reference.* (A) Pinal County Air Quality Control District.

(*1*) Chapter 1, Article 3, section 1–3–140, subsections 5, 15, 21, 32, 33, 35, 50, 51, 58, 59, 103, and 123, adopted on November 3, 1993; Chapter 3, Article 1, section 3–1–081(A)(8)(a), adopted on November 3, 1993; Chapter 3, Article 1, section 3–1–084, adopted on August 11, 1994; and Chapter 3, Article 1, section 3–1–107, adopted on November 3, 1993.

(72) New and amended plans and regulations for the following agencies were submitted on November 13, 1992 by the Governor's designee.

(i) *Incorporation by reference.* (A) Arizona Department of Environmental Quality.

(*1*) Small Business Stationary Source Technical and Environmental Compliance Assistance Program, adopted on November 13, 1992.

(B) Maricopa County Environmental Quality and Community Services Agency.

(*1*) Rule 340, adopted on September 21, 1992.

(73) [Reserved]

(74) Plan revisions were submitted by the Governor's designee on March 3, 1994.

(i) *Incorporation by reference.* (A) Maricopa County Environmental Services Department new Rule 316, adopted July 6, 1993, and revised Rule 311, adopted August 2, 1993. Note: These rules are restored as elements of the State of Arizona Air Pollution Control Implementation Plan effective September 3, 1997.

(B) [Reserved]

(75) Program elements submitted on November 14, 1994, by the Governor's designee.

(i) *Incorporation by reference.* (A) Arizona Department of Environmental Quality.

(*1*) Basic and Enhanced Inspection and Maintenance Vehicle Emissions Program. Adopted on September 15, 1994.

(76) Program elements were submitted on February 1, 1995 by the Governor's designee.

(i) *Incorporation by reference.* (A) Small Business Stationary Source Technical and Environmental Compliance Assistance Program, adopted on February 1, 1995.

(77) Amended regulations for the following agency were submitted on December 19, 1994, by the Governor's designee.

(i) *Incorporation by reference.* (A) Maricopa County Environmental Services Department.

(*1*) Rule 334, adopted on September 20, 1994.

(78) New and amended regulations for the Maricopa County Environmental Services Department—Air Pollution Control were submitted on February 4, 1993, by the Governor's designee.

(i) *Incorporation by reference.* (A) New Rule 352, adopted on November 16, 1992.

(B) Rule 100, Section 504 adopted on November 16, 1992.

(C) Rule 339, adopted on November 16, 1992.

(79) New and amended regulations for the following agencies were submitted on June 29, 1992 by the Governor's designee.

(i) *Incorporation by reference.* (A) Maricopa County Environmental Quality and Community Services Agency.

(*1*) Rule 353, adopted on April 6, 1992.

(80) New and amended regulations for the following agencies were submitted on August 10, 1992 by the Governor's designee.

(i) *Incorporation by reference.* (A) Maricopa County Environmental Quality and Community Services Agency.

(*1*) Rules 331 and 333, adopted on June 22, 1992.

(81) Amended regulation for the following agency was submitted on August 16, 1994, by the Governor's designee.

(i) *Incorporation by reference.* (A) Maricopa County Environmental Services Department.

(*1*) Rule 341, adopted on August 5, 1994.

(82) New and amended rules and regulations for the Maricopa County Environmental Services Department—Air Pollution Control were submitted on August 31, 1995, by the Governor's designee.

(i) *Incorporated by reference.* (A) Rule 343, adopted on February 15, 1995.

(B) [Reserved]

(C) Rule 351, revised on February 15, 1995.

(D) Rule 318 and Residential Woodburning Restriction Ordinance, adopted on October 5, 1994.

(E) Maricopa County.

(*1*) Ordinance P–7, Maricopa County Trip Reduction Ordinance, adopted May 26, 1994.

(83) New and revised rules and regulations for the Maricopa County Environmental Services Department-Air Pollution Control were submitted on February 26, 1997, by the Governor's designee.

(i) *Incorporation by reference.* (A) Rules 331, 333, and 334, revised on June 19, 1996, and Rule 338, adopted on June 19, 1996.

(B) Rule 336, adopted on July 13, 1988 and revised on June 19, 1996.

(84) Amended regulations for the Pinal County Air Quality Control District were submitted on November 27, 1995, by the Governor's designee.

(i) *Incorporation by reference.* (A) Rules 1–1–020, 1–1–030, 1–1–040, 1–1–060, 1–1–070, 1–1–080, 1–1–100, 1–2–110, 2–1–010, 2–1–020, 2–1–030, 2–1–040, 2–1–050, 2–1–060, 2–1–070, 2–2–080, 2–2–090, 2–3–100, 2–3–110, 2–4–120, 2–4–130, 2–4–140, 2–4–150, 2–5–170, 2–5–210, 2–6–220, 2–7–230, 2–7–240, 2–7–250, 2–7–260, 2–7–270, 3–1–020, 3–1–132, adopted on June 29, 1993.

(B) Rules 1–1–090, 1–2–120, 3–1–010, 3–1–030, 3–1–055, 3–1–065, 3–1–070, 3–1–082, 3–1–085, 3–1–087, 3–1–090, 3–1–102, 3–1–105, 3–1–110, 3–1–120, 3–1–140, 3–1–150, 3–1–160, 3–1–170, 3–1–173, 3–1–175, 3–1–177, 3–2–180, 3–2–185, 3–2–190, 3–2–195, 3–3–200, 3–3–203, 3–3–205, 3–3–260, 3–3–270, 3–3–275, 3–3–280, adopted on November 3, 1993.

(C) Rules 1–1–010, 1–1–106, 2–5–190, 2–5–200, 3–1–042, 3–1–060, 3–1–081, 3–1–083, 3–1–084, 3–1–089, 3–1–103, 3–1–107, 3–1–109, 3–3–210, 3–3–250, adopted on February 22, 1995.

(D) Rules 1–3–130, 1–3–140, 2–5–160, 2–5–180, 3–1–040, 3–1–050, adopted on October 12, 1995.

(E) Rules 5–22–950, 5–22–960, and 5–24–1045 codified on February 22, 1995.

(F) Amendments to Rules 5–18–740, 5–19–800, and 5–24–1055 adopted on February 22, 1995.

(G) Previously approved on April 9, 1996 in paragraph (c)(84)(i)(A) of this section and now deleted without replacement, Rule 3–1–020.

(H) Previously approved on April 9, 1996 in paragraph (c)(84)(i)(D) of this section and now deleted without replacement, Rule 1–3–130.

(I) Rules 2–8–280, 2–8–290, 2–8–300, 2–8–310, and 2–8–320, adopted on June 29, 1993.

(J) Rules 3–8–700 and 3–8–710, amended on February 22, 1995.

(K) Rule 5–24–1040, codified on February 22, 1995.

(L) Rules 4–2–020, 4–2–030, and 4–2–040, adopted on June 29, 1993.

(M) Rule 5–24–1032, ''Federally Enforceable Minimum Standard of Performance—Process Particulate Emissions,'' codified February 22, 1995.

(85) New and revised rules and regulations for the Maricopa County Environmental Services Department-Air Pollution Control were submitted on March 4, 1997, by the Governor's designee.

(i) *Incorporation by reference.* (A) Rule 337, revised on November 20, 1996, and Rules 342 and 346, adopted on November 20, 1996.

(86) [Reserved]

(87) New and amended fuel regulations for the following Arizona Department of Environmental Quality plan revisions were submitted on April 29, 1997, by the Governor's designee.

(i) *Incorporation by reference.* (A) Arizona Revised Statutes.

(*1*) Section 13 of H.B, 2001 (A.R.S. § 41–2083(E)), adopted on November 12, 1993.

(88) Plan revisions were submitted on May 7, 1997 by the Governor's designee.

(i) *Incorporation by reference.* (A) Maricopa County Environmental Services Department.

(*1*) Rule 310, adopted September 20, 1994.

(*2*) Resolution To Improve the Administration of Maricopa County's Fugitive Dust Program and to Foster Interagency Cooperation, adopted May 14, 1997.

(B) The City of Phoenix, Arizona.

(*1*) A Resolution of the Phoenix City Council Stating the City's Intent to Work Cooperatively with Maricopa County to Control the Generation of Fugitive Dust Pollution, adopted April 9, 1997.

(C) The City of Tempe, Arizona.

(*1*) A Resolution of the Council of the City of Tempe, Arizona, Stating Its Intent to Work Cooperatively with Maricopa County to Control the Generation of Fugitive Dust Pollution, adopted March 27, 1997.

(D) The Town of Gilbert, Arizona.

(*1*) A Resolution of the Mayor and the Common Council of the Town of Gilbert, Maricopa County, Arizona, Providing for the Town's Intent to Work Cooperatively with Maricopa County, Arizona, to Control the Generation of Fugitive Dust Pollution, adopted April 15, 1997.

(E) The City of Chandler, Arizona.

(*1*) A Resolution of the City Council of the City of Chandler, Arizona, Stating the City's Intent to Work Cooperatively with Maricopa County to Control the Generation of Fugitive Dust Pollution, adopted March 27, 1997.

(F) The City of Glendale, Arizona.

(*1*) A Resolution of the Council of the City of Chandler, Maricopa County, Arizona, Stating Its Intent to Work Cooperatively with Maricopa County to Control the Generation of Fugitive Dust Pollution, adopted March 25, 1997.

(G) The City of Scottsdale, Arizona.

(*1*) A Resolution of the Scottsdale City Council Stating the City's Intent to Work Cooperatively with Maricopa County to Control the Generation of Fugitive Dust Pollution, adopted March 31, 1997.

(H) The City of Mesa, Arizona.

(*1*) A Resolution of the Mesa City Council Stating the City's Intent to Work Cooperatively with Maricopa County to Control the Generation of Particulate Air Pollution and Directing City Staff to Develop a Particulate Pollution Control Ordinance Supported by Adequate Staffing Levels to Address Air Quality, adopted April 23, 1997.

(89) Plan revisions were submitted on September 12, 1997 by the Governor's designee.

(i) *Incorporation by reference.* (A) Arizona Cleaner Burning Gasoline Interim rule submitted as a revision to the Maricopa Country Ozone Nonattainment Area Plan, adopted on September 12, 1997.

(90) Plan revisions were submitted on January 21, 1998 by the Governor's designee.

(i) *Incorporation by reference.* (A) Arizona Cleaner Burning Gasoline Interim rule submitted as a revision to the PM–10 Maricopa County State Implementation Plan, adopted on September 12, 1997.

(91) The following amendments to the plan were submitted on October 6, 1997 by the Governor's designee.

(i) *Incorporation by reference.* (A) 1996 Carbon Monoxide Limited Maintenance Plan for the Tucson Air Planning Area (as updated August, 1997).

(1) Base year (1994) emissions inventory and contingency plan, including commitments to follow maintenance plan contingency procedures by the Pima Association of Governments and by the member jurisdictions: the town of Oro Valley, Arizona (Resolution No. (R) 96–38, adopted June 5, 1996), the City of South Tucson (Resolution No. 96–16, adopted on June 10, 1996), Pima County (Resolution and Order No. 1996–120, adopted June 18, 1996), the City of Tucson (Resolution No. 17319, adopted June 24, 1996), and the town of Marana, Arizona (Resolution No. 96–55, adopted June 18, 1996).

(B) Arizona Revised Statutes. Senate Bill 1002, Sections 26, 27 and 28: ARS 41–2083 (amended), 41–2122 (amended), 41–2125 (amended), adopted on July 18, 1996.

(92) Plan revisions were submitted on March 3, 1995, by the Governor's designee.

(A) Arizona State Administrative Code Title 18, Chapter 2, Article 14, adopted on December 23, 1994.

(93) Plan revisions were submitted on September 4, 1998 by the Governor's designee.

(i) *Incorporation by reference.* (A) Arizona Revised Statute 49–457.

(94) New and amended rules and regulations for the Maricopa County Environmental Services Department-Air Pollution Control were submitted on August 4, 1999, by the Governor's designee.

(i) *Incorporation by reference.* (A) Rule 336, adopted on July 13, 1988 and revised on April 7, 1999 and Rule 348, adopted on April 7, 1999.

(B) Rule 318 and Residential Woodburning Restriction Ordinance, revised on April 21, 1999.

(C) Rule 347, adopted on March 4, 1998.

(D) Rule 316, adopted on April 21, 1999.

(E) Rule 344, adopted on April 7, 1999.

(F) Rule 349, adopted on April 7, 1999.

(G) Rule 331, revised on April 7, 1999.

(95) The following amendments to the plan were submitted on August 11, 1998 by the Governor's designee.

(i) *Incorporation by reference.* (A) Arizona Revised Statutes.

(*1*) Senate Bill 1427, Section 14: ARS 49–401.01 (amended) and Section 15: 49–406 (amended), approved on May 29, 1998.

(96) The following amendments to the plan were submitted on September 1, 1999 by the Governor's designee.

(i) *Incorporation by reference.* (A) Arizona Revised Statutes.

(*1*) House Bill 2254, Section 1: ARS 41–3009.01 (amended); Section 2: 49–541.01 (amended); Section 3: 49–542 (amended); Section 4: 49–545 (amended); Section 5: 49–557 (amended); Section 6: 49–573 (amended); Section 7: 41–803 (amended) and Section 8: 41–401.01 (amended), adopted on May 18, 1999.

(*2*) House Bill 2189, Section 3: ARS 41–796.01 (amended); Section 9: 41–2121 (amended); Section 40: 49–401.01 (amended), Section 41: 49–402 (amended); Section 42: 49–404 (amended): Section 43:49–454 (amended); Section 44: 49–541 (amended); and Section 46: 49–571 (amended), adopted on May 18, 1999

(97) New and amended rules for the Arizona Department of Environmental Quality were submitted on March 26, 2001, by the Governor's designee.

(i) *Incorporation by reference.* (A) Rules R18–2–310 and R18–2–310.01 effective on February 15, 2001.

(98) Plan revisions were submitted on July 11, 2000 by the Governor's designee.

(i) *Incorporation by reference.* (A) Arizona Administrative Code R18–2–610 and R18–2–611 effective May 12, 2000.

(99) Plan revisions submitted on January 28, 2000 by the Governor's designee.

(i) *Incorporation by reference.* (A) Maricopa County, Arizona.

(*1*) Residential Woodburning Restriction Ordinance adopted on November 17, 1999.

(100) Plan revisions submitted on February 16, 2000 by the Governor's designee.

(i) *Incorporation by reference.* (A) Maricopa Association of Governments, Maricopa County, Arizona.

(*1*) Resolution to Adopt the Revised MAG 1999 Serious Area Particulate Plan for PM–10 for the Maricopa County Nonattainment Area (including Exhibit A, 2 pages), adopted on February 14, 2000.

(B) City of Avondale, Arizona.

(*1*) Resolution No. 1711–97; A Resolution of the City Council of the City of Avondale, Maricopa County, Arizona, To Implement Measures in the MAG 1997 Serious Area Particulate Plan for PM–10 and MAG 1998 Serious Area Carbon Monoxide Plan for the Maricopa County Area (including Exhibit A, 14 pages), adopted on September 15, 1997.

(*2*) Resolution No. 1949–99; A Resolution of the Council of the City of Avondale, Maricopa County, Arizona, Implementing Measures in the MAG 1998 Serious Area Particulate Plan for PM–10 for the Maricopa County Area (including Exhibit A, 7 pages), adopted on February 16, 1999.

(C) Town of Buckeye, Arizona.

(*1*) Resolution No. 15–97; A Resolution of the Town Council of the Town of Buckeye, Maricopa County, Arizona, To Implement Measures in the MAG 1997 Serious Area Carbon Monoxide Plan for the Maricopa County Area (including Exhibit A, 5 pages), adopted on October 7, 1997.

(D) Town of Carefree, Arizona.

(*1*) Town of Carefree Resolution No. 97–16; A Resolution of the Mayor and

Common Council of the Town of Carefree, Arizona, To Implement Measures in the MAG 1997 Serious Area Particulate Plan for PM–10 and MAG 1998 Serious Area Carbon Monoxide Plan for the Maricopa County Area (including Exhibit A, 3 pages), adopted on September 2, 1997.

(*2*) Town of Carefree Resolution No. 98–24; A Resolution of the Mayor and Common Council of the Town of Carefree, Arizona, To Implement Measures in the MAG 1998 Serious Area Particulate Plan for PM–10 for the Maricopa County Area (including Exhibit A, 4 pages), adopted on September 1, 1998.

(*3*) Town of Carefree Ordinance No. 98–14; An Ordinance of the Town of Carefree, Maricopa County, Arizona, Adding Section 10–4 to the Town Code Relating to Clean-Burning Fireplaces, Providing Penalties for Violations (3 pages), adopted on September 1, 1998.

(E) Town of Cave Creek, Arizona.

(*1*) Resolution R97–28; A Resolution of the Mayor and Town Council of the Town of Cave Creek, Maricopa County, Arizona, Implementing Measures in the MAG 1997 Serious Area Particulate Plan for PM–10 and MAG 1998 Serious Area Carbon Monoxide Plan for the Maricopa County Area (including Exhibit A, 4 pages), adopted on September 2, 1997.

(*2*) Resolution R98–14; A Resolution of the Mayor and Town Council of the Town of Cave Creek, Maricopa County, Arizona, To Implement Measures in the MAG 1998 Serious Area Particulate Plan for PM–10 for the Maricopa County Area (including Exhibit A, 1 page), adopted on December 8, 1998.

(F) City of Chandler, Arizona.

(*1*) Resolution No. 2672; A Resolution of the City Council of the City of Chandler, Arizona To Implement Measures in the MAG 1997 Serious Area Particulate Plan for PM–10 and MAG 1998 Serious Area Carbon Monoxide Plan for the Maricopa County Area (including Exhibit A, 16 pages), adopted on August 14, 1997.

(*2*) Resolution No. 2929; A Resolution of the City Council of the City of Chandler, Arizona, To Implement Measures in the MAG 1998 Serious Area Particulate Plan for PM–10 for the Maricopa County Area (including Exhibit A, 9 pages), adopted on October 8, 1998.

(G) City of El Mirage, Arizona.

(*1*) Resolution No. R97–08–20; Resolution To Implement Measures in the MAG 1997 Serious Area Particulate Plan for PM–10 and MAG 1998 Serious Area Carbon Monoxide Plan for the Maricopa County Area (including Exhibit A, 8 pages), adopted on August 28, 1997.

(*2*) Resolution No. R98–08–22; A Resolution of the Mayor and Common Council of the City of El Mirage, Arizona, Amending Resolution No. R98–02–04 To Implement Measures in the MAG 1997 Serious Area Particulate Plan for PM–10 for the Maricopa County Area (including Exhibit A, 5 pages), adopted on August 27, 1998.

(*3*) Resolution No. R98–02–04; A Resolution To Implement Measures in the MAG 1997 Serious Area Particulate Plan for PM–10 for the Maricopa County Area (including Exhibit A, 5 pages), adopted on February 12, 1998.

(H) Town of Fountain Hills, Arizona.

(*1*) Resolution No. 1997–49; A Resolution of the Common Council of the Town of Fountain Hills, Arizona, Adopting the MAG 1997 Particulate Plan for PM–10 and MAG 1998 Serious Area Carbon Monoxide Plan for the Maricopa County Area and Committing to Certain Implementation Programs (including Exhibit B, 5 pages and cover), adopted on October 2, 1997.

(*2*) Town of Fountain Hills Resolution No. 1998–49; Resolution To Implement Measures in the MAG 1998 Serious Area Particulate Plan for PM–10 for the Maricopa County Area (including Exhibit A, 7 pages), adopted on October 1, 1998. [INCORPORATION NOTE: Incorporated materials are pages 4 to 10 of the 11-page resolution package; pages 1 and 2 are cover sheets with no substantive content and page 11 is a summary of measures previously adopted by the Town of Fountain Hills.]

(I) Town of Gilbert, Arizona.

(*1*) Resolution No. 1817; A Resolution of the Common Council of the Town of Gilbert, Maricopa County, Arizona, Authorizing the Implementation of the MAG 1997 Serious Area Particulate Plan for PM–10 and the MAG Serious Area Carbon Monoxide Plan for the Maricopa County Area (including 15

pages of attached material), adopted on June 10, 1997.

(*2*) Resolution No. 1864; A Resolution of the Common Council of the Town of Gilbert, Arizona, Implementing Measures in the MAG 1997 Serious Area Particulate Plan for PM–10 for the Maricopa County Area (including Attachment A, 5 pages), adopted on November 25, 1997. [INCORPORATION NOTE: Attachment A is referred to as Exhibit A in the text of the Resolution.]

(*3*) Ordinance 1066; An Ordinance of the Common Council of the Town of Gilbert, Arizona Amending the Code of Gilbert by Amending Chapter 30 *Environment,* by adding New Article II *Fireplace Restrictions* Prescribing Standards for Fireplaces, Woodstoves, and Other Solid-Fuel Burning Devices in New Construction; Providing for an Effective Date of January 1, 1999; Providing for Repeal of Conflicting Ordinances; Providing for Severability (3 pages), adopted on November 25, 1997.

(*4*) Resolution No. 1939: A Resolution of the Common Council of the Town of Gilbert, Arizona, Expressing its Commitment to Implement Measures in the Maricopa Association of Governments (MAG) 1998 Serious Area Particulate Plan for PM–10 for the Maricopa County Area (including Attachment A, 5 pages), adopted on July 21, 1998. [INCORPORATION NOTE: Attachment A is referred to as Exhibit A in the text of the Resolution.]

(J) City of Glendale, Arizona.

(*1*) Resolution No. 3123 New Series; A Resolution of the Council of the City of Glendale, Maricopa County, Arizona, Implementing Measures in the MAG 1997 Serious Area Particulate Plan for PM–10 and MAG 1998 Serious Area Carbon Monoxide Plan for the Maricopa County Area (including Exhibit A, 20 pages), adopted on June 10, 1997.

(*2*) Resolution No. 3161 New Series; A Resolution of the Council of the City of Glendale, Maricopa County, Arizona, Implementing Measures in the MAG 1997 Serious Area Particulate Plan for PM–10 for the Maricopa County Area (including Exhibit A, 6 pages), adopted on October 28, 1997.

(*3*) Resolution No. 3225 New Series; A Resolution of the Council of the City of Glendale, Maricopa County, Arizona, Implementing Measures in the MAG 1998 Serious Area Particulate Plan for PM–10 for the Maricopa County Area (including Exhibit A, 9 pages), adopted on July 28, 1998.

(K) City of Goodyear, Arizona.

(*1*) Resolution No. 97–604 Carbon Monoxide Plan; A Resolution of the Council of the City of Goodyear, Maricopa County, Arizona, Implementing Measures in the MAG 1997 Serious Area Particulate Plan for PM–10 and MAG 1998 Serious Area Carbon Monoxide Plan for the Maricopa County Area (including Exhibit A, 21 pages), adopted on September 9. [INCORPORATION NOTE: Adoption year not given on the resolution but is understood to be 1997 based on resolution number.]

(*2*) Resolution No. 98–645; A Resolution of the Council of the City of Goodyear, Maricopa County, Arizona, Implementing Measures in the MAG 1998 Serious Area Particulate Plan for PM–10 for the Maricopa County Area (including Attachment III, 7 pages), adopted on July 27, 1998.

(L) City of Mesa, Arizona.

(*1*) Resolution No. 7061; A Resolution of the City Council of the City of Mesa, Maricopa County, Arizona, to Implement Measures in the MAG 1997 Serious Area Particulate Plan for PM–10 and MAG 1998 Serious Area Carbon Monoxide Plan for the Maricopa County Area (including Exhibit A, 13 pages plus index page), adopted on June 23, 1997.

(*2*) Resolution No. 7123; A Resolution of the City Council of the City of Mesa, Maricopa County, Arizona, to Implement Measures in the MAG 1997 Serious Area Particulate Plan for PM–10 for the Maricopa County Area (including Exhibit A, 10 pages), adopted on December 1, 1997.

(*3*) Resolution No. 7360; A Resolution of the City Council of the City of Mesa, Maricopa County, Arizona, to Implement Measures in the MAG Serious Area Particulate Plan for PM–10 for the Maricopa County Area (including Exhibit A, 8 pages), adopted on May 3, 1999.

(*4*) Ordinance No. 3434; An Ordinance of the City Council of the City of Mesa, Maricopa County, Arizona, Relating to Fireplace Restrictions Amending Title 4, Chapter 1, Section 2 Establishing a Delayed Effective Date; and Providing

Penalties for Violations (3 pages), adopted on February 2, 1998.

(M) Town of Paradise Valley, Arizona.

(*1*) Resolution Number 913; A Resolution of the Town of Paradise Valley, to Implement Measures in the MAG 1997 Serious Area Particulate Plan for PM–10 and MAG 1998 Serious Area Carbon Monoxide Plan for the Maricopa County Area (including Exhibit A, 9 pages), adopted on October 9, 1997.

(*2*) Resolution Number 945; A Resolution of the Mayor and Town Council of the Town of Paradise Valley, Arizona, to Implement Measures in the MAG 1998 Serious Area Particulate Plan for PM–10 for the Maricopa County Area (including Exhibit A, 5 pages), adopted on July 23, 1998.

(*3*) Ordinance Number 454; An Ordinance of the Town of Paradise Valley, Arizona, Relating to Grading and Dust Control, Amending Article 5–13 of the Town Code and Sections 5–13–1 Through 5–13–5, Providing Penalties for Violations and Severability (5 pages), adopted on January 22, 1998. [INCORPORATION NOTE: There is an error in the ordinance's title, ordinance amended only sections 5–13–1 to 5–13–4; see section 1 of the ordinance.]

(*4*) Ordinance Number 450; An Ordinance of the Town of Paradise Valley, Arizona, Adding Section 5–1–7 to the Town Code Relating to Clean-Burning Fireplaces, Providing Penalties for Violations (3 pages), adopted on December 18, 1997.

(N) City of Peoria, Arizona.

(*1*) Resolution No. 97–37; A Resolution of the Mayor and Council of the City of Peoria, Arizona, to Implement Measures in the MAG 1997 Serious Area Particulate Plan for PM–10 and MAG 1998 Serious Area Carbon Monoxide Plan for the Maricopa County Area (including Exhibits A, 5 pages, and B, 19 pages), adopted on June 17, 1997.

(*2*) Resolution No. 97–113; A Resolution of the Mayor and Council of the City of Peoria, Arizona, to Implement Measures in the MAG 1997 Serious Area Particulate Plan for PM–10 for the Maricopa County Area and Directing the Recording of This Resolution with the Maricopa County Recorder and Declaring an Emergency (including Exhibit A, 8 pages plus index page), adopted on October 21, 1997.

(*3*) Resolution No. 98–107; A Resolution of the Mayor and Council of the City of Peoria, Arizona, to Approve and Authorize the Acceptance to Implement Measures in the MAG 1998 Serious Area Particulate Plan for PM–10 for the Maricopa County Area (including Exhibit A, 7 pages), adopted on July 21, 1998.

(O) City of Phoenix, Arizona.

(*1*) Resolution No. 18949; A Resolution Stating the City's Intent to Implement Measures to Reduce Air Pollution (including Exhibit A, 19 pages), adopted on July 2, 1997.

(*2*) Resolution No. 19006; A Resolution Stating the City's Intent to Implement Measures to Reduce Air Pollution (including Exhibit A, 13 pages), adopted on November 19, 1997.

(*3*) Ordinance No. G4037; An Ordinance Amending Chapter 39, Article 2, Section 39–7 of the Phoenix City Code by Adding Subsection G Relating to Dust Free Parking Areas; and Amending Chapter 36, Article XI, Division I, Section 36–145 of the Phoenix City Code Relating to Parking on Non-Dust Free Lots, adopted on July 2, 1997 (5 pages).

(*4*) Resolution No. 19141; A Resolution Stating the City's Intent to Implement Measures to Reduce Particulate Air Pollution (including Exhibit A, 10 pages), adopted on September 9, 1998.

(*5*) Ordinance No. G4062; An Ordinance Amending the Phoenix City Code By Adding A New Chapter 40 ''Environmental Protections,'' By Regulating Fireplaces, Wood Stoves and Other Solid-Fuel Burning Devices and Providing that the Provisions of this Ordinance Shall Take Effect on December 31, 1998 (5 pages), adopted on December 10, 1997.

(P) Town of Queen Creek, Arizona.

(*1*) Resolution 129–97; A Resolution of the Town Council of the Town of Queen Creek, Maricopa County, Arizona to Implement Measures in the MAG 1997 Serious Area Particulate Plan for PM–10 and MAG 1998 Serious Area Carbon Monoxide Plan for the Maricopa County Area (including Exhibit A, 3 pages), adopted on June 4, 1997.

(*2*) Resolution 145–97; A Resolution of the Town Council of the Town of Queen Creek, Maricopa County, Arizona to

Implement Measures in the MAG 1997 Serious Area Particulate Plan for PM–10 for the Maricopa County Area (including Exhibit A, 1 page), adopted on November 5, 1997.

(*3*) Resolution 175–98; A Resolution of the Town Council of the Town of Queen Creek, Maricopa County, Arizona to Implement Measures in the MAG 1998 Serious Area Particulate Plan for the Maricopa County Area (including Exhibit A, 9 pages), adopted on September 16, 1998.

(Q) City of Scottsdale, Arizona.

(*1*) Resolution No. 4864; A Resolution of the City of Scottsdale, Maricopa County, Arizona, To Implement Measures in the MAG 1997 Serious Area Particulate Plan for PM–10 and MAG 1998 Serious Area Carbon Monoxide Plan for the Maricopa County Area: Stating the Council's Intent to Implement Certain Control Measures Contained in that Plan (including Exhibit A, 21 pages), adopted on August 4, 1997.

(*2*) Resolution No. 4942; Resolution of the Scottsdale City Council To Implement Measures in the MAG 1997 Serious Area Particulate Plan for PM–10 for the Maricopa County Area (including Exhibit A, 13 pages), adopted on December 1, 1997.

(*3*) Resolution No. 5100; A Resolution of the City of Scottsdale, Maricopa County, Arizona, To Strengthen Particulate Dust Control and Air Pollution Measures in the Maricopa County Area (including Exhibit A, 10 pages), adopted on December 1, 1998.

(R) City of Surprise, Arizona.

(*1*) Resolution No. 97–29; A Resolution to Implement Measures in the MAG 1997 Serious Area Particulate Plan for PM–10 and MAG 1998 Serious Area Carbon Monoxide Plan for the Maricopa County Area (including Exhibit A, 4 pages), adopted on June 12, 1997.

(*2*) Resolution No. 97–67; A Resolution to Implement Measures in the MAG 1997 Serious Area Particulate Plan for PM–10 for the Maricopa County Area (including Exhibit A, 3 pages), adopted on October 23, 1997.

(*3*) Resolution No. 98–51; A Resolution to Implement Measures in the MAG 1997 Serious Area Particulate Plan for PM–10 for the Maricopa County Area (including Exhibit A, 6 pages), adopted on September 10, 1998.

(S) City of Tempe, Arizona.

(*1*) Resolution No. 97.39; Resolution to Implement Measures in the MAG 1997 Serious Area Particulate Plan for PM–10 and MAG 1998 Serious Area Carbon Monoxide Plan for the Maricopa County Area (including Exhibit A, 18 pages), adopted on June 12, 1997.

(*2*) Resolution No. 97.71, Resolution of the Council of the City of Tempe Stating Its Intent to Implement Measures in the MAG 1997 Serious Area Particulate Plan for PM–10 for the Maricopa County Area (including Exhibit A, 6 pages), adopted on November 13, 1997.

(*3*) Resolution No. 98.42, Resolution of the Council of the City of Tempe Implementing Measures in the MAG 1998 Serious Area Particulate Plan for PM–10 for the Maricopa County Area (including Exhibit A, 8 pages), adopted on September 10, 1998.

(T) City of Tolleson, Arizona.

(*1*) Resolution No. 788, A Resolution of the Mayor and City Council of the City of Tolleson, Maricopa County, Arizona, Implementing Measures in the Maricopa Association of Governments (MAG) 1997 Serious Area Particulate Plan for PM–10 and MAG 1998 Serious Area Carbon Monoxide Plan for the Maricopa County Area (including Exhibit A, 12 pages), adopted on June 10, 1997.

(*2*) Resolution No. 808, A Resolution of the Mayor and City Council of the City of Tolleson, Maricopa County, Arizona, Implementing Measures in the Maricopa Association of Governments (MAG) 1998 Serious Area Particulate Plan for PM–10 for the Maricopa County Area (including Exhibit A), adopted on July 28, 1998.

(*3*) Ordinance No. 376, N.S., An Ordinance of the City of Tolleson, Maricopa County, Arizona, Amending Chapter 7 of the Tolleson City Code by Adding a New Section 7–9, Prohibiting the Installation or Construction of a Fireplace or Wood Stove Unless It Meets the Standards Set Forth Herein (including Exhibit A, 4 pages), adopted on December 8, 1998.

(U) Town of Wickenburg, Arizona.

(*1*) Resolution No. 1308, Resolution To Implement Measures in the MAG 1997 Serious Area Particulate Plan for PM–10 and MAG 1998 Serious Area Carbon

Monoxide Plan for the Maricopa County Area (including Exhibit A, 4 pages), adopted on August 18, 1997.

(V) Town of Youngtown, Arizona.

(*1*) Resolution No. 97–15, Resolution To Implement Measures in the MAG 1997 Serious Particulate Plan for PM–10 and MAG 1998 Serious Area Carbon Monoxide Plan for the Maricopa County Area (including Exhibit A, 4 pages), adopted on September 18, 1997.

(*2*) Resolution No. 98–15: Resolution To Implement Measures in the MAG 1998 Serious Area Particulate Plan for PM–10 for the Maricopa County Area (including Exhibit A, 8 pages), adopted on August 20, 1998.

(*3*) Resolution No 98–05: Resolution Stating Intent to Work Cooperatively with Maricopa County to Control the Generation of Fugitive Dust Pollution (including Exhibit A, 2 pages), adopted February 19, 1998.

(W) Maricopa County, Arizona.

(*1*) Resolution to Implement Measures in the MAG 1997 Serious Area Particulate Plan for PM–10 and MAG 1A998 Serious Area Carbon Monoxide Plan for the Maricopa County Area (including Exhibit A, 16 pages), adopted on June 25, 1997. [INCORPORATION NOTE: ''1A998'' error in the original.]

(*2*) Resolution to Implement Measures in the MAG 1997 Serious Area Particulate Plan for PM–10 for the Maricopa County Area (including Exhibit A, 9 pages), adopted on November 19, 1997.

(*3*) Resolution to Implement Measures in the MAG 1998 Serious Area Particulate Plan for PM–10 for the Maricopa County Area (including Exhibit A, 10 pages), adopted on February 17, 1999.

(*4*) Resolution to Implement Measures in the MAG 1999 Serious Area Particulate Plan for PM–10 for the Maricopa County Area (including Exhibit A, 10 pages), adopted on December 15, 1999.

(X) Arizona Department of Transportation, Phoenix, Arizona.

(*1*) Resolution to Implement Measures in the MAG 1997 Serious Area Particulate Plan for PM–10 and MAG 1998 Serious Area Carbon Monoxide Plan for the Maricopa County Area (including Exhibit A, 24 pages plus index page), adopted on June 20, 1997.

(*2*) Resolution to Implement Measures in the MAG 1998 Serious Area Particulate Plan for PM–10 for the Maricopa County Area (including Exhibit A, 8 pages), adopted on July 17, 1998.

(Y) Regional Public Transportation Authority, Phoenix, Arizona.

(*1*) Resolution #9701: Resolution to Implement Measures in the MAG 1997 Serious Area Particulate Plan for PM–10 and MAG 1998 Serious Area Carbon Monoxide Plan for the Maricopa County Area (including Exhibit A, 23 pages), adopted on June 12, 1997.

(Z) State of Arizona.

(*1*) Arizona Revised Statute Section 49–542(F)(7) as added in Section 31 of Arizona Senate Bill 1002, 42nd Legislative Session, 7th Special Session (1996), approved by the Governor July 18, 1996.

(101) Plan revisions submitted on March 2, 2000, by the Governor's designee.

(i) *Incorporation by reference.* (A) Maricopa County Environmental Services Department.

(*1*) Rule 310 revised on February 16, 2000.

(*2*) Rule 310.01 adopted on February 16, 2000.

(*3*) Appendix C revised on February 16, 2000.

(102) Plan revisions submitted on January 8, 2002, by the Governor's designee.

(i) *Incorporation by reference.* (1) Maricopa County, Arizona.

(*1*) Resolution to Update Control Measure 6 in the Revised MAG 1999 Serious Area Particulate Plan for PM–10 for the Maricopa County Area (including Exhibit A, 2 pages), adopted on December 19, 2001.

(103) The following plan was submitted on February 7, 2002, by the Governor's designee.

(i) *Incorporation by reference.* (A) Arizona Department of Environmental Quality.

(1) Bullhead City Moderate Area PM_{10} Maintenance Plan and Request for Redesignation to Attainment, adopted on February 7, 2002.

(104) The following plan was submitted on March 29, 2002, by the Governor's designee.

(i) *Incorporation by reference.* (A) Arizona Department of Environmental Quality.

(1) Payson Moderate Area PM_{10} Maintenance Plan and Request for Redesignation to Attainment, adopted on March 29, 2002.

(B) [Reserved]

(105) Amended rule for the following agency was submitted on March 22, 2002, by the Governor's designee.

(i) *Incorporation by reference.* (A) Maricopa County Environmental Services Department.

(*1*) Rule 314, revised on December 19, 2001.

(106) Amended rule for the following agency was submitted on February 22, 2002, by the governor's designee.

(i) *Incorporation by reference.* (A) Maricopa County Environmental Services Department.

(*1*) Rule 140, revised on September 5, 2001.

(107) Amended rules for the following agency were submitted on October 7, 1998 by the Governor's designee.

(i) *Incorporation by reference.* (A) Pinal County Air Quality Control District.

(*1*) Rule 1–3–140, adopted on June 29, 1993 and amended on July 29, 1998.

(*2*) Rule 4–2–050, adopted on May 14, 1997.

(108) Revisions to the Arizona State Implementation Plan for the Motor Vehicle Inspection and Maintenance Programs, submitted on July 6, 2001.

(i) *Incorporation by reference.* (A) Arizona Revised Statutes.

(*1*) Section 49–551 as amended in Section 27 of Arizona Senate Bill 1427, 43rd Legislature, 2nd Regular Session (1998), approved by the Governor on May 29, 1998.

(*2*) Section 49–544 as amended in Section 15 of Arizona Senate Bill 1007, 43rd Legislature, 4th Special Session (1998), approved by the Governor on May 20, 1998.

(*3*) Section 49–541 as amended in Section 44 of Arizona House Bill 2189, 44th Legislature, 1st Regular Session (1999), approved by the Governor on May 18, 1999.

(*4*) Section 49–542.01 repealed in Section 3 and Section 49–545 as amended in Section 5 of Arizona House Bill 2104, 44th Legislature, 2nd Regular session (2000), approved by the Governor on April 28, 2000.

(*5*) Section 49–542.05 as added in Section 23 of Arizona Senate Bill 1004, 44th Legislature, 7th Special Session (2000), approved by the Governor on December 14, 2000.

(B) Arizona Administrative Code.

(*1*) Title 18, Chapter 2, Article 10 (except for AAC R 18–2–1020) ''Motor Vehicles; Inspection and Maintenance'' as adopted on December 31, 2000.

(109) Revisions to the Arizona State Implementation Plan for the Motor Vehicle Inspection and Maintenance Programs, submitted on April 10, 2002 by the Governor's designee.

(i) *Incorporation by reference.* (A) Arizona Revised Statutes.

(*1*) Section 49–542 as amended in Section 9, Section 49–543 as amended in Section 11, and Section 49–541.01 repealed in Section 29 of Arizona House Bill 2538, 45th Legislature, 1st Regular Session (2001), approved by the Governor on May 7, 2001.

(B) Arizona Administrative Code.

(*1*) Amendments to AAC R 18–2–1006 and 18–2–1019, and the repeal of AAC R 18–2–1014 and R 18–2–1015 effective January 1, 2002.

(110) New and amended regulations were submitted on July 15, 1998, and supplemented on May 16, 2014, by the Governor's designee.

(i) *Incorporation by reference.* (A) Arizona Department of Environmental Quality.

(*1*) Rules R18–2–701, R18–2–710, R18–2–725, R18–2–727, R18–2–801, R18–2–802, R18–2–803, R18–2–804, and R18–2–805, amended on November 15, 1993.

(*2*) Rules R18–2–715.02 and R18–2–715, Appendix 8 amended on November 15, 1993.

(*3*) Arizona Administrative Code, title 18 (''Environmental Quality''), chapter 2 (''Department of Environmental Quality—Air Pollution Control''), supp. 12–2, June 30, 2012: R18–2–601 (''General''); R18–2–604 (''Open Areas, Dry Washes, or Riverbeds''); R18–2–605 (''Roadways and Streets''); R18–2–606 (''Material Handling''); R18–2–607 (''Storage Piles''); and R18–2–614 (''Evaluation of Nonpoint Source Emissions''); R18–2–706 (''Standards of Performance for Existing Nitric Acid Plants''); R18–2–707 (''Standards of Performance for Existing Sulfuric Acid

Plants''); R18–2–714 (''Standards of Performance for Existing Sewage Treatment Plants''); R18–2–723 (''Standards of Performance for Existing Concrete Batch Plants''); R18–2–726 (''Standards of Performance for Sandblasting Operations''); and R18–2–728 (''Standards of Performance for Existing Ammonium Sulfide Manufacturing Plants'').

(111) The following plan was submitted on June 18, 2002, by the Governor's designee.

(i) *Incorporation by reference.* (A) Arizona Department of Environmental Quality.

(*1*) Ajo Sulfur Dioxide State Implementation and Maintenance Plan, adopted by Arizona Department of Environmental Quality on June 18, 2002.

(112) Revised regulations were submitted on August 15, 2001, by the Governor's designee as part of the submittal entitled *Arizona Cleaner Burning Gasoline Rule to Revise the State Implementation Plan for the Maricopa County Carbon Monoxide, Ozone, and PM10 Nonattainment Areas.* The incorporated materials from this submittal supercede those included in the submittals entitled *SIP Revision, Arizona Cleaner Burning Gasoline Permanent Rules—Maricopa County Ozone Nonattainment Area,* submitted on February 24, 1999, and *State Implementation Plan Revision for the Cleaner Burning Gasoline Program in the Maricopa County Ozone Nonattainment Area,* submitted on March 29, 2001.

(i) *Incorporation by reference.* (A) Arizona Administrative Code.

(*1*) AAC R20–2–701, R20–2–716, R20–2–750 through 762, and Title 20, Chap. 2, Art. 7, Tables 1 and 2 (March 31, 2001).

(113) Revised statutes were submitted on January 22, 2004, by the Governor's designee as part of the submittal entitled *Supplement to Cleaner Burning Gasoline Program State Implementation Plan Revision.* The incorporated materials from this submittal supercede those included in the submittals entitled *SIP Revision, Arizona Cleaner Burning Gasoline Permanent Rules—Maricopa County Ozone Nonattainment Area,* submitted on February 24, 1999, *State Implementation Plan Revision for the Cleaner Burning Gasoline Program in the Maricopa County Ozone Nonattainment Area,* submitted on March 29, 2001, and *Arizona Cleaner Burning Gasoline Rule to Revise the State Implementation Plan for the Maricopa County Carbon Monoxide, Ozone, and PM10 Nonattainment Areas,* submitted August 15, 2001.

(i) *Incorporation by reference.* (A) Arizona Revised Statutes.

(*1*) ARS sections 49–541(1)(a), (b), and (c), 41–2124, 41–2123, 41–2113(B)(4), 41–2115, and 41–2066(A)(2) (as codified on March 31, 2001).

(114) The following plan was submitted on June 21, 2002, by the Governor's designee.

(i) *Incorporation by reference.* (A) Arizona Department of Environmental Quality.

(*1*) Morenci Sulfur Dioxide Nonattainment Area State Implementation and Maintenance Plan, adopted by the Arizona Department of Environmental Quality on June 21, 2002.

(115) Amended regulations were submitted on January 16, 2004, by the Governor's designee.

(i) *Incorporation by reference.* (A) Arizona Department of Environmental Quality.

(1) Rule 18–2–101 (Paragraphs 41 and 111), amended on November 15, 1993 and Rule R–18–2–702, amended on December 26, 2003.

(116) New and amended regulations were submitted on September 12, 2003, by the Governor's designee.

(i) *Incorporation by reference.* (A) Arizona Department of Environmental Quality.

(*1*) Rules R18–2–715 (sections F, G, and H) and R18–2–715.01 amended on August 9, 2002.

(117) Amended regulation was submitted on July 28, 2004, by the Governor's designee.

(i) *Incorporation by reference.* (A) Maricopa County Environmental Services Department.

(*1*) Rule 331 adopted on April 21, 2004.

(118) The following plan was submitted on April 18, 2001, by the Governor's designee.

(i) *Incorporation by reference.* (A) Arizona Department of Environmental Quality.

(*1*) *Revised MAG 1999 Serious Area Carbon Monoxide Plan for the Maricopa County Nonattainment Area,* dated March 2001, adopted by the Maricopa Association of Governments on March

28, 2001, and adopted by the Arizona Department of Environmental Quality on April 18, 2001.

(119) The following plan was submitted on June 16, 2003, by the Governor's designee.

(i) *Incorporation by reference.* (A) Arizona Department of Environmental Quality.

(*1*) *MAG Carbon Monoxide Redesignation Request and Maintenance Plan for the Maricopa County Nonattainment Area and Appendices*, dated May 2003, adopted by the Arizona Department of Environmental Quality on June 16, 2003.

(120) [Reserved]

(121) A plan revision was submitted on April 20, 2005 by the Governor's designee.

(i) *Incorporation by reference.* (A) Maricopa County Environmental Services Department.

(*1*) Permit V98–004, condition 23, W.R. Meadows of Arizona, Inc., Goodyear, AZ, adopted on February 17, 2005.

(122) A plan revision was submitted on April 25, 2005 by the Governor's designee.

(i) *Incorporation by reference.* (A) Maricopa County Environmental Services Department.

(*1*) Rule 358 adopted on April 20, 2005.

(123) The following plan was submitted on December 7, 1998, by the Governor's designee.

(i) *Incorporation by reference.* (A) Arizona Department of Environmental Quality.

(*1*) Letter and enclosures regarding Arizona's Intent to ''Opt-out'' of the Clean Fuel Fleet Program, adopted by the Arizona Department of Environmental Quality on December 7, 1998.

(124) The following plan was submitted on December 14, 2000, by the Governor's designee.

(i) *Incorporation by reference.* (A) Arizona Department of Environmental Quality.

(*1*) *Final Serious Area Ozone State Implementation Plan for Maricopa County*, dated December 2000, adopted by the Arizona Department of Environmental Quality on December 14, 2000.

(125) The following plan was submitted on April 21, 2004, by the Governor's designee.

(i) *Incorporation by reference.* (A) Arizona Department of Environmental Quality.

(*1*) *One-Hour Ozone Redesignation Request and Maintenance Plan for the Maricopa County Nonattainment Area*, dated March 2004, adopted by the Maricopa Association of Governments Regional Council on March 26, 2004 and adopted by the Arizona Department of Environmental Quality on April 21, 2004.

(126) The following plan was submitted on December 14, 2001, by the Governor's designee.

(i) Incorporation by reference.

(A) Arizona Department of Environmental Quality.

(*1*) Douglas Sulfur Dioxide Nonattainment Area State Implementation and Maintenance Plan, dated November 29, 2001, adopted by the Arizona Department of Environmental Quality on December 14, 2001.

(127) The following plan was submitted on April 2, 2004, by the Governor's designee.

(i) Incorporation by reference.

(A) Arizona Department of Environmental Quality.

(*1*) Modeling Supplement—Douglas Sulfur Dioxide (SO_2) State Implementation and Maintenance Plan, adopted by the Arizona Department of Environmental Quality on April 2, 2004.

(128) The following plan was submitted on September 16, 2005, by the Governor's designee.

(i) Incorporation by reference.

(A) Arizona Department of Environmental Quality.

(*1*) Modeling and Emissions Inventory Supplement for the Douglas Sulfur Dioxide Nonattainment Area State Implementation and Maintenance Plan and Redesignation Request, dated September 2005, adopted by the Arizona Department of Environmental Quality on September 16, 2005.

(129) The following amended rule was submitted on September 12, 2005, by the Governor's designee.

(i) Incorporation by reference.

(A) Pinal County Air Quality Control District.

(*1*) Rule 2–8–300, adopted on June 29, 1993 and amended on May 18, 2005.

(130) An amended regulation was submitted on March 1, 2006, by the Governor's designee.

(i) Incorporation by reference.

(A) Arizona Department of Environmental Quality.

(*1*) Rule R18–2–Appendix 8, adopted on December 22, 1976 and amended effective on July 18, 2005.

(131) The following amended rules were submitted on December 30, 2004, by the Governor's designee.

(i) *Incorporation by reference.* (A) Arizona Department of Environmental Quality.

(*1*) Rule R18–2–602, adopted effective on May 14, 1979 and amended effective on March 16, 2004.

(*2*) Rules R18–2–1501, R18–2–1502, R18–2–1503, R18–2–1504, R18–2–1505, R18–2–1506, R18–2–1507, R18–2–1508, R18–2–1509, R18–2–1510, R18–2–1511, R18–2–1512, and R18–2–1513, adopted effective on October 8, 1996 and amended effective on March 16, 2004.

(B) Pima County Department of Environmental Quality.

(*1*) Rule 17.12.480, amended on October 19, 2004.

(C) Pinal County Air Quality Control District.

(*1*) Rules 3–8–700 and 3–8–710, adopted effective on June 29, 1993 and amended on October 27, 2004.

(132) The following plan revision was submitted on June 26, 2002, by the Governor's designee.

(i) Incorporation by reference.

(A) Arizona Department of Environmental Quality.

(1) Final Miami Sulfur Dioxide Nonattainment Area State Implementation and Maintenance Plan (June 2002), chapter 7 (''Maintenance Plan''), adopted on June 26, 2002 by the Arizona Department of Environmental Quality.

(ii) Additional materials.

(A) Arizona Department of Environmental Quality.

(*1*) Final Miami Sulfur Dioxide Nonattainment Area State Implementation and Maintenance Plan (June 2002), excluding the cover page, and pages iii, 2, 3, 4, and 49; chapter 7 (''Maintenance Plan''); appendix A (''SIP Support Information''), sections A.1 (''Pertinent Sections of the Arizona Administrative Code'') and A.2 (''Information Regarding Revisions to AAC R18–2–715 and R18–2–715.01, 'Standards of Performance for Primary Copper Smelters: Site Specific Requirements; Compliance and Monitoring' ''); and appendix D (''SIP Public Hearing Documentation''), adopted on June 26, 2002 by the Arizona Department of Environmental Quality.

(*2*) Submittal of Corrections to the Final Miami Sulfur Dioxide Nonattainment Area State Implementation and Maintenance Plan (June 2002), letter and enclosures (replacement pages for the cover page and pages iii, 2, 3, 4 and 49), dated June 30, 2004.

(*3*) Letter from Stephen A. Owens, Director, Arizona Department of Environmental Quality, dated June 20, 2006, withdrawing a section 107(d)(3)(D) boundary redesignation request included in the Miami Sulfur Dioxide Nonattainment Area State Implementation and Maintenance Plan and requesting a section 110(k)(6) error correction.

(133) The following statute and plan were submitted on December 23, 2005 by the Governor's designee.

(i) Incorporation by reference.

(A) Arizona Revised Statutes.

(*1*) Section 49–542 as amended in section 1 of the Arizona House Bill 2357, 47th Legislature, 1st Regular Session (2005) and approved by the Governor on April 13, 2005.

(ii) Additional material.

(A) Arizona Department of Environmental Quality.

(*1*) Final Arizona State Implementation Plan Revision, Basic and Enhanced Vehicle Emissions Inspection/Maintenance Programs (December 2005), adopted by the Arizona Department of Environmental Quality on December 23, 2005, excluding appendices.

(134) The following plan was submitted on October 3, 2006 by the Governor's designee.

(i) Incorporation by reference.

(A) Arizona Department of Environmental Quality.

(*1*) September 2006 Supplement to Final Arizona State Implementation Plan Revision, Basic and Enhanced Vehicle Emissions Inspection/Maintenance Programs, December 2005, adopted by the Arizona Department of Environmental Quality on October 3, 2006, excluding appendices.

(135) An amended regulation was submitted on June 8, 2006, by the Governor's designee.

(i) Incorporation by reference.

(A) Maricopa County Environmental Services Department.

(*1*) Rule 314, adopted on July 13, 1988 and amended on April 20, 2005.

(136) The following plan was submitted on May 24, 2007 by the Governor's designee.

(i) Incorporation by reference.

(A) Arizona Department of Environmental Quality.

(*1*) Revision to the Arizona State Implementation Plan Under Clean Air Act Section 110(a)(2)(D)(i)—Regional Transport (May 2007), adopted by the Arizona Department of Environmental Quality on May 24, 2007.

(137) The Administrator is approving the following elements of the *Revised PM–10 State Implementation Plan for the Salt River Area*, September 2005, submitted on October 7, 2005, by the Governor's designee.

(i) *Incorporation by reference.*

(A) Maricopa County Air Quality Department.

(*1*) Rule 325, adopted on August 10, 2005.

(*2*) Rule 310, revised on April 7, 2004.

(*3*) Appendix C, ''Fugitive Dust Test Methods,'' adopted on June 16, 1999, and revised on April 7, 2004.

(*4*) Appendix F, ''Soil Designations,'' adopted on April 7, 2004.

(*5*) Resolution No. C–85–05–005–0–00: Resolution to Implement Additional Measures for the Maricopa County, Arizona Serious PM–10 Nonattainment Area (including Exhibit A), adopted on January 19, 2005.

(B) City of Apache Junction.

(*1*) Resolution No. 04–24: A Resolution of the Mayor and City Council of the City of Apache Junction, Arizona, Implementing Measures to Reduce Reentrained Dust Emissions from Targeted Paved Roads in the Revised PM–10 State Implementation Plan for the Salt River Area (including Exhibit A), adopted on September 21, 2004.

(C) City of Avondale.

(*1*) Resolution No. 2448–04: A Resolution of the Council of the City of Avondale, Arizona, Implementing Measures to Reduce Reentrained Dust Emissions from Targeted Paved Roads in the Revised PM–10 State Implementation Plan for the Salt River Area (including Exhibit A), adopted on September 20, 2004.

(D) Town of Buckeye.

(*1*) Resolution No. 58–04: A Resolution of the Mayor and Town Council of the Town of Buckeye, Arizona, Implementing Measures to Reduce Reentrained Dust Emission from Targeted Paved Roads in the Revised PM–10 State Implementation Plan for the Salt River Area (including Exhibit A), adopted on November 16, 2004.

(E) City of Chandler.

(*1*) Resolution No. 3782: Resolution to Implement Measures to Reduce Re-entrained Dust Emissions from Identified Paved Roads in Chandler As Part of the Revised PM–10 State Implementation Plan for Air Quality (including Exhibit A and Exhibit B), adopted on October 14, 2004.

(F) City of El Mirage.

(*1*) Resolution No. R04–10–54: A Resolution of the Mayor and City Council of the City of El Mirage, Maricopa County, Arizona, Implementing Measures to Reduce Re-entrained Dust Emissions from Targeted Paved Roads in the Revised PM–10 State Implementation Plan for the Salt River Area (including Exhibit A), adopted on October 28, 2004.

(G) Town of Fountain Hills.

(*1*) Resolution No. 2004–63: A Resolution of the Mayor and Council of the Town of Fountain Hills, Arizona, Implementing Measures to Reduce Reentrained Dust Emissions from Targeted Paved Roads in the Revised PM–10 State Implementation Plan for the Salt River Area (including Exhibit A and Protocol to Reduce Reentrained Dust Emissions from Targeted Paved Roads), adopted on November 18, 2004.

(H) Town of Gilbert.

(*1*) Resolution No. 2575: A Resolution of the Common Council of the Town of Gilbert, Arizona to Implement Measures to Reduce Reentrained Dust Emissions from Targeted Paved Roads in the Revised PM–10 State Implementation Plan for the Salt River Area (including Exhibit A and Town of Gilbert Protocol for Reducing PM–10 Emissions from ''High Dust'' Paved Roads), adopted on March 29, 2005.

(I) City of Glendale.

(*1*) Resolution No. 3796 New Series: A Resolution of the Council of the City of Glendale, Maricopa County, Arizona, Implementing Measures to Reduce Re-

entrained Dust Emissions from Targeted Paved Roads in the Revised PM–10 State Implementation Plan for the Salt River Area (including Exhibit A and Glendale Targeted Street Sweeping Protocol to Reduce Dust Emissions), adopted on September 14, 2004.

(J) City of Goodyear.

(*1*) Resolution No. 04–941: A Resolution of the Mayor and Council of the City of Goodyear, Maricopa County, Arizona, to Authorize the City Manager to Implement Measures to Reduce Reentrained Dust Emissions from Targeted Paved Roads in the Revised PM–10 State Implementation Plan for the Salt River Area (including Exhibit A and Protocol for Reducing Reentrained Dust Emissions from Targeted Paved Roads), adopted on October 25, 2004.

(K) City of Mesa.

(*1*) Resolution No. 8344: A Resolution of the City Council of the City of Mesa, Maricopa County, Arizona, Stating the City's Intent to Implement Measures to Reduce Particulate Pollution (including Exhibit A), adopted on October 4, 2004.

(L) Town of Paradise Valley.

(*1*) Resolution Number 1084: Resolution to Implement Measures to Reduce Reentrained Dust Emissions from Targeted Paved Roads in the Revised PM–10 State Implementation Plan for the Salt River Area (including Exhibit A), adopted on September 23, 2004.

(M) City of Peoria.

(*1*) Resolution No. 04–235: A Resolution of the Mayor and City Council of the City of Peoria, Maricopa County, Arizona, Implementing Measures to Reduce Reentrained Dust Emissions from Targeted Paved Roads in the Revised PM–10 State Implementation Plan for the Salt River Area (including Exhibit A and City of Peoria Targeted Paved Roadways Dust Control Protocol, September 24, 2004), adopted on October 5, 2004.

(N) City of Phoenix.

(*1*) Resolution No. 20114: A Resolution Stating the City's Intent to Implement Measures to Reduce Air Pollution (including Exhibit A, City of Phoenix 2004 Protocol and Implementation Plan for Paved Streets with Potential for Dust Emissions, and Attachment A), adopted on June 16, 2004.

(O) City of Scottsdale.

(*1*) Resolution No. 6588: A Resolution of the Council of the City of Scottsdale, Maricopa County Arizona, Authorizing Implementation of Measures to Reduce Reentrained Dust Emissions from Targeted Paved Roads in the Revised PM–10 State Implementation Plan for the Salt River Area (including Exhibit A and Attachment #1—Protocol to Reduce Reentrained Dust Emissions from Targeted Paved Roads), adopted on December 6, 2004.

(P) City of Surprise.

(*1*) Resolution No. 04–163: A Resolution of the Mayor and Council of the City of Surprise, Arizona, to Implement Measures to Reduce Reentrained Dust Emissions from Targeted Paved Roads in the Revised PM–10 State Implementation Plan for the Salt River Area (including Exhibit A and Protocol), adopted on September 23, 2004.

(Q) City of Tempe.

(*1*) Resolution No. 2004.84: A Resolution of the Mayor and City Council of the City of Tempe, Arizona, to Implement Measures to Reduce Re-entrained Dust Emissions from Targeted Paved Roads in the Revised PM–10 State Implementation Plan for the Salt River Area (including Exhibit A and Protocol for Reducing Re-entrained Dust Emissions from Targeted Paved Roads, September 30, 2004), adopted on September 30, 2004.

(R) City of Tolleson.

(*1*) Resolution No. 947: A Resolution of the Mayor and City Council of the City of Tolleson, Maricopa County, Arizona, Implementing Measures to Reduce Reentrained Dust Emissions from Targeted Paved Roads in the Revised PM–10 State Implementation Plan for the Salt River Area (including Exhibit A), adopted on September 28, 2004.

(S) Town of Youngtown.

(*1*) Resolution No. 05–01: Resolution to Implement Measures to Reduce Reentrained Dust Emissions from Targeted Paved Roads in the Revised PM–10 State Implementation Plan for the Salt River Area (including Exhibit A), adopted on January 20, 2005.

(T) Arizona Department of Transportation.

(*1*) Resolution to Implement Measures to Reduce Reentrained Dust Emissions from Targeted Paved Roads in

the Revised PM–10 State Implementation Plan for the Salt River Area (including Exhibit A and Arizona Department of Transportation Plan to Reduce Reentrained Dust Emissions from Targeted Paved Roads), adopted on September 17, 2004.

(138) The Administrator is approving the following elements of the *Revised PM–10 State Implementation Plan for the Salt River Area*, Additional Submittals, September 2005, Additional Submittal in November 2005, submitted on November 29, 2005, by the Governor's designee.

(i) *Incorporation by reference.*

(A) Maricopa County Air Quality Department.

(*1*) Rule 310.01, adopted on June 16, 1999, and revised on February 17, 2005.

(*2*) Application for Dust Control Permit, adopted on June 22, 2005.

(*3*) Guidance for Application for Dust Control Permit, adopted on June 22, 2005.

(139) The following plan was submitted on July 5, 2007 by the Governor's designee.

(i) Incorporation by reference.

(A) Maricopa County Air Quality Department

(*1*) Rule 242, adopted on June 20, 2007.

(140) The following plan was submitted on June 7, 2007 by the Governor's designee.

(i) Incorporation by reference.

(A) Arizona Department of Environmental Quality. (*1*) *Final Arizona State Implementation Plan Revision, San Manuel Sulfur Dioxide Nonattainment Area*, March 2007, Arizona Department of Environmental Quality.

(B) Maricopa County Air Quality Department.

(*1*) Rule 510, ''Air Quality Standards,'' excluding Appendix G to the Maricopa County Air Pollution Control Regulations, adopted on July 13, 1988 and revised on November 1, 2006.

(141) The following amended rules were submitted on July 10, 2008, by the Governor's designee.

(i) Incorporation by reference.

(A) Maricopa County.

(*1*) Ordinance P–26, ''Residential Woodburning Restriction Ordinance,'' adopted on October 5, 1994 and revised on March 26, 2008.

(B) Maricopa County Air Quality Department.

(*1*) Rule 314, ''Open Outdoor Fires and Indoor Fireplaces at Commercial and Institutional Establishments,'' adopted on July 13, 1988 and revised on March 12, 2008.

(*2*) Rule 316, ''Nonmetallic Mineral Processing,'' adopted on March 12, 2008.

(*3*) Rule 300, ''Visible Emissions,'' amended March 12, 2008.

(142) New and amended regulations were submitted on January 9, 2008, by the Governor's designee.

(i) Incorporation by reference.

(A) Maricopa County Air Quality Department.

(*1*) Rule 322, ''Power Plant Operations,'' adopted October 17, 2007.

(*2*) Rule 323, ''Fuel Burning Equipment from Industrial/Commercial/Institutional (ICI) Sources,'' adopted October 17, 2007.

(*3*) Rule 324, ''Stationary Internal Combustion (IC) Engines,'' adopted October 17, 2007.

(143) The 2008 Revision to the Carbon Monoxide Limited Maintenance Plan for the Tucson Air Planning Area (for 2010), adopted by the Pima Association of Governments on June 26, 2008, and adopted and submitted by the Arizona Department of Environmental Quality on July 10, 2008, excluding appendix D.

(144) Appendix D (Revised) (''Letter from Arizona Department of Environmental Quality re: Vehicle Emissions Inspection Program (VEIP), Revised to include supporting documents authorizing the VEIP from 2009 to 2017 (Chapter 171, Senate Bill 1531 from the 48th Regular Session of the Arizona Legislature and Arizona Revised Statute text A.R.S. 41–3017.01''), adopted as a Supplement to the Carbon Monoxide Limited Maintenance Plan for the Tucson Air Planning Area (for 2010) by the Pima Association of Governments on May 28, 2009, and adopted and submitted by the Arizona Department of Environmental Quality on June 22, 2009.

(145) New and amended regulations were submitted on June 12, 2009 by the Governor's designee.

(i) *Incorporation by Reference.*

(A) Pinal County Air Quality Control District.

(*1*) Rule 2–8–302, ''Performance Standards—Hayden PM–10 Non-attainment Area,'' adopted on January 7, 2009.

(*i*) Pinal County Board of Supervisors, Resolution No. 010709–AQ3, Pinal County Air Quality Control District, ''A Resolution of the Board of Supervisors of Pinal County, Adopting Certain Revisions to the Pinal County Air Quality Control District Rules, adopted January 7, 2009; to Wit: Rule 2–8–302 (Performance Standards—Hayden PM10 Nonattainment Area). Rule 4–2–020, ''Fugitive Dust—General,'' amended on December 4, 2002. Rule 4–2–030, ''Fugitive Dust—Definitions,'' amended on December 4, 2002. Chapter 4, Article 4, ''PM–10 Non-attainment Area Rules; Dustproofing and Stabilization for Commercial Unpaved Parking, Drive and Working Yards''; Section 4–4–100, ''General Provisions,'' amended on June 3, 2009; Section 4–4–110, ''Definitions,'' amended on June 3, 2009; Section 4–4–120, ''Objective Standards,'' amended on June 3, 2009; Section 4–4–130, ''Work Practice Standards,'' adopted on June 3, 2009; Section 4–4–140, ''Recordkeeping and Records Retention,'' adopted on June 3, 2009. Chapter 4, Article 5, ''PM–10 Non-attainment Area Rules; Stabilization for Residential Parking and Drives''; Section 4–5–150, ''Stabilization for Residential Parking and Drives; Applicability,'' amended on June 3, 2009; Section 4–5–160, ''Residential Parking Control Requirement,'' amended on June 3, 2009; Section 4–5–170, ''Deferred enforcement date,'' amended on June 3, 2009. Chapter 4, Article 7, ''Construction Sites in Non-Attainment Areas—Fugitive Dust''; Section 4–7–210, ''Definitions,'' adopted on June 3, 2009; Section 4–7–214, ''General Provisions,'' adopted on June 3, 2009; Section 4–7–218, ''Applicability; Development Activity,'' adopted on June 3, 2009; Section 4–7–222, ''Owner and/or Operator Liability,'' adopted on June 3, 2009; Section 4–7–226, ''Objective Standards; Sites,'' adopted on June 3, 2009; Section 4–7–230, ''Obligatory Work Practice Standards; Sites,'' adopted on June 3, 2009; Section 4–7–234, ''Non-attainment-Area Dust Permit Program; General Provisions,'' adopted on June 3, 2009; Section 4–7–238, ''Non-attainment Area Site Permits,'' adopted on June 3, 2009; Section 4–7–242, ''Nonattainment Area Block Permits,'' adopted on June 3, 2009; Section 4–7–246, ''Recordkeeping and Records Retention,'' adopted on June 3, 2009. Chapter 4, Article 9, ''Test Methods''; Section 4–9–320, ''Test Methods for Stabilization For Unpaved Roads and Unpaved Parking Lots,'' adopted on June 3, 2009; Section 4–9–340, ''Visual Opacity Test Methods,'' adopted on June 3, 2009.

(146) The following plan was submitted on April 12, 2010 by the Governor's designee.

(i) Incorporation by reference.

(A) Maricopa County Air Quality Department.

(*1*) Rule 310, ''Fugitive Dust From Dust-Generating Operations,'' adopted on January 27, 2010.

(*2*) Rule 310.01, ''Fugitive Dust From Non-Traditional Sources of Fugitive Dust,'' adopted on January 27, 2010.

(147) The following plan was submitted on July 10, 2008 by the Governor's designee.

(i) Incorporation by reference.

(A) Maricopa County Air Quality Department.

(*1*) Appendix C—''Fugitive Dust Test Methods,'' adopted on March 26, 2008.

(148) The following plan revision was submitted on September 21, 2009 by the Governor's designee.

(i) *Incorporation by reference.* (A) *Arizona Department of Weights and Measures.* (*1*) Arizona Revised Statutes, title 41 (State Government), chapter 15 (Department of Weights and Measures), as amended and supplemented by the general and permanent laws enacted through the First Special Session, and legislation effective January 11, 2011 of the First Regular Session of the Fiftieth Legislature (2011):

(i) Article 1 (General Provisions), section 41–2051 (''Definitions''), subsections (6) (''Certification''), (10) (''Department''), (11) (''Diesel fuel''), (12) (''Director''), and (13) (''E85''), amended by Laws 2008, Ch. 254, § 2;

(ii) Article 6 (Motor Fuel), section 41–2121 (''Definitions''), subsection (5) (''Gasoline'') amended by Laws 2007, Ch. 292, § 11; and

(iii) Article 7 (Gasoline Vapor Control), section 41–2131 (''Definitions''), added by Laws 1992, Ch. 299, § 6; section 41–2132 (''Stage I and stage II vapor recovery systems''), amended by Laws

2010, Ch. 181, § 2; and section 41–2133 (''Compliance schedules''), amended by Laws 1999, Ch. 295, § 17.

(*2*) Arizona Administrative Code, title 20, chapter 2, article 1 (Administration and Procedures), section R20–2–101 (''Definitions''), effective (for state purposes) on June 5, 2004.

(*3*) Arizona Administrative Code, title 20, chapter 2, article 9 (Gasoline Vapor Control):

(i) Sections R20–2–901 (''Material Incorporated by Reference''), R20–2–902 (''Exemptions''), R20–2–903 (''Equipment and Installation''), R20–2–904 (''Application Requirements and Process for Authority to Construct Plan Approval''), R20–2–905 (''Initial Inspection and Testing''), R20–2–910 (''Annual Inspection and Testing''), R20–2–911 (''Compliance Inspections''), and R20–2–912 (''Enforcement''), effective (for state purposes) on June 5, 2004.

(ii) Sections R20–2–907 (''Operation''), R20–2–908 (''Training and Public Education''), and R20–2–909 (''Recordkeeping and Reporting''), effective (for state purposes) on October 8, 1998.

(149) The following plan was submitted on June 13, 2007 by the Governor's designee.

(i) [Reserved]

(ii) *Additional Materials*. (A) *Arizona Department of Environmental Quality*. (1) Letter dated June 13, 2007 from Stephen A. Owens, Director, ADEQ, to Wayne Nastri, Regional Administrator, United States Environmental Protection Agency, Region IX.

(2) Eight-Hour Ozone Plan for the Maricopa Nonattainment Area, dated June 2007, including Appendices, Volumes One and Two.

(150) The following plan was submitted on August 24, 2012, by the Governor's designee.

(i) [Reserved]

(ii) Additional material.

(A) Arizona Department of Environmental Quality.

(*1*) ''Final 2012 State Implementation Plan Nogales PM_{10} Nonattainment Area,'' dated August 24, 2012, including Appendices A–K, adopted on August 24, 2012.

(151) The following plan revisions were submitted on August 15, 1994 by the Governor's designee.

(i) Incorporation by reference.

(A) Arizona Department of Environmental Quality.

(1) Rule R18–2–220, Air pollution emergency episodes, Department of Environmental Quality-Air Pollution Control, amended effective September 26, 1990.

(2) A letter from Eric C. Massey, Director, Air Quality, Arizona Department of Environmental Quality, to Jared Blumenfeld, Regional Administrator, US EPA, dated August 30, 2012, certifying that the attached copy of a document titled ''Procedures for Prevention of Emergency Episodes: 1988 Edition'' is a true and correct copy of the original and is an official publication of the Arizona Department of Environmental Quality.

(3) ''Procedures for Prevention of Emergency Episodes,'' 1988 edition, Arizona Department of Environmental Quality.

(152) The following plan was submitted August 24, 2012, by the Governor's designee.

(i) Incorporated by reference.

(A) Arizona Department of Environmental Quality.

(*1*) Arizona Administrative Code, title 18, chapter 2, article 3 (Permits and Permit Revisions):

(*i*) Section R18–2–313 (''Existing Source Emission Monitoring''), effective on February 15, 2001.

(*ii*) Section R18–2–327, (''Annual Emissions Inventory Questionnaire''), effective on December 7, 1995.

(B) Maricopa County Air Quality Department.

(*1*) Rule 100, Section 500, ''Monitoring and Records,'' revised on March 15, 2006.

(ii) Additional materials.

(A) Arizona Department of Environmental Quality.

(*1*) ''Final Supplement to the Arizona State Implementation Plan under Clean Air Act Section 110(a)(1) and (2): Implementation of 2006 $PM_{2.5}$ National Ambient Air Quality Standards, 1997 $PM_{2.5}$ National Ambient Air Quality Standards, and 1997 8-Hour Ozone National Ambient Air Quality Standards,'' August 2012, adopted by the Arizona Department of Environmental Quality on August 24, 2012, excluding the appendices.

(*2*) Arizona Revised Statutes (West's, 2011–2012 Compact Edition):

(*i*) Title 28 (transportation), chapter 7 (certification of title and registration), article 5 (registration requirements generally), section 28–2153 (''Registration requirement; exceptions; assessment; violation; classification'');

(*ii*) Title 35 (public finances), chapter 2 (handling of public funds), article 2 (state management of public monies), section 35–313 (''Investment of trust and treasury monies; loan of securities'');

(*iii*) Title 38 (public officers and employees), chapter 1 (general provisions), article 1 (definitions), section 38–101 (''Definitions'') and article 8 (conflict of interest of officers and employees), sections 38–501 (''Application of article''), 38–502 (''Definitions''), 38–503 (''Conflict of interest; exemptions; employment prohibition''), 38–504 (''Prohibited acts''), 38–505 (''Additional income prohibited for services'') 38–506 (''Remedies''), 38–507 (''Opinions of the attorney general, county attorneys, city or town attorneys and house and senate ethics committee''), 38–508 (''Authority of public officers and employees to act''), 38–509 (Filing of disclosures''), 38–510 (''Penalties''), and 38–511 (''Cancellation of political subdivision and state contracts; definition'');

(*iv*) Title 49 (the environment), chapter 1 (general provisions), article 1 (department of environmental quality), section 49–103 (''Department employees; legal counsel''), subsections (A)(2), (A)(4), (B)(3), and (B)(5) of section 49–104 (''Powers and duties of the department and director''), and sections 49–106 (''Statewide application of rules'') and 49–107 (''Local delegation of state authority'');

(*v*) Title 49 (the environment), chapter 3 (air quality), article 1 (general provisions), section 49–405 (''Attainment area designations''); article 2 (state air pollution control), sections 49–421 (''Definitions''), 49–422 (''Powers and duties''), 49–424 (''Duties of department''), 49–425 (''Rules; hearing''), 49–433 (''Special inspection warrant''), 49–435 (''Hearings on orders of abatement''), and 49–441 (''Suspension and revocation of conditional order''), subsections (A) and (B)(2) of section 49–455 (''Permit administration fund''), and sections 49–460 (''Violations; production of records''), 49–461 (''Violations; order of abatement''), 49–462 (''Violations; injunctive relief''), 49–463 (''Violations; civil penalties''), and 49–465 (''Air pollution emergency''); and article 3 (county air pollution control), sections 49–471 (''Definitions''), 49–473 (''Board of supervisors''), 49–474 (''County control boards''), 49–476.01 (''Monitoring''), 49–478 (''Hearing board''), 49–479 (''Rules; hearing''), 49–480.02 (''Appeals of permit actions''), 49–482 (''Appeals to hearing board''), 49–488 (''Special inspection warrant''), 49–490 (''Hearings on orders of abatement''), 49–495 (''Suspension and revocation of conditional order''), 49–502 (''Violation; classification''), 49–510 (''Violations; production of records''), 49–511 (''Violations; order of abatement''), 49–512 (''Violations; injunctive relief''), and 49–513 (''Violations; civil penalties'').

(153) The following plan was submitted on October 14, 2009, by the Governor's designee.

(i) [Reserved]

(ii) Additional materials.

(A) Arizona Department of Environmental Quality.

(*1*) ''Arizona State Implementation Plan Revision under Clean Air Act Section 110(a)(1) and (2): Implementation of 2006 $PM_{2.5}$ National Ambient Air Quality Standards, 1997 $PM_{2.5}$ National Ambient Air Quality Standards, and 1997 8-Hour Ozone National Ambient Air Quality Standards,'' September 2009, adopted by the Arizona Department of Environmental Quality on October 14, 2009, excluding the appendices.

(154) The following plan was submitted February 28, 2011, by the Governor's designee.

(i) [Reserved]

(ii) Additional materials.

(A) Arizona Department of Environmental Quality.

(*1*) Arizona State Implementation Plan, Regional Haze Under Section 308 of the Federal Regional Haze Rule: Appendix D, Arizona BART—Supplemental Information:

(*i*) Table 1.1—NO_X BART, entry for AEPCO [Apache], ST1 [Unit 1] only.

(*ii*) Table 1.2—PM_{10} BART, entries for AEPCO [Apache], APS Cholla Power Plant and SRP Coronado Generating Station.

(*iii*) Table 1.3—SO_2 BART, entries for AEPCO, APS Cholla Power Plant and SRP Coronado Generating Station.

(*2*) Arizona State Implementation Plan, Regional Haze Under Section 308 of the Federal Regional Haze Rule (January 2011), excluding:

(*i*) Chapter 6: table 6.1; chapter 10: sections 10.4, 10.6 (regarding Unit I4 at the Irvington (Sundt) Generating Station), 10.7, and 10.8; chapter 11; chapter 12: sections 12.7.3 (''Emission Limitation and Schedules of Compliance'') and 12.7.6 (''Enforceability of Arizona's Measures''); and chapter 13: section 13.2.3 (''Arizona and Other State Emission Reductions Obligations'');

(*ii*) Appendix D: chapter I; chapter V (regarding Unit I4 at the Irvington (Sundt) Generating Station); chapter VI, sections C and D; chapter VII; chapter IX; chapter X, section E.1; chapter XI, section D; chapter XII, sections B and C; chapter XIII, sections B, C, and D; and chapter XIV, section D; and

(*iii*) Appendix E.

(155) The following plan was submitted on November 6, 2009 by the Governor's designee.

(i) Incorporation by reference.

(A) Arizona Department of Environmental Quality.

(*1*) Affidavit by Efrem K. Sepulveda, Law Librarian, Arizona State Library, Archives and Public Records, certifying authenticity of reproduction of A.R.S. § 49–542 (2008 edition) plus title page to pocket part of Title 49 (2008 edition), signed January 11, 2013.

(*2*) Arizona Revised Statutes (Thomson West, 2008 Cumulative Pocket Part): Title 49 (the environment), section 49–542 (''Emissions inspection program; powers and duties of director; administration; periodic inspection; minimum standards and rules; exceptions; definition'').

(ii) Additional materials.

(A) Arizona Department of Environmental Quality.

(*1*) Final Arizona State Implementation Plan Revision, Exemption of Motorcycles from Vehicle Emissions Inspections and Maintenance Program Requirements in Area A (October 2009), adopted by the Arizona Department of Environmental Quality on November 6, 2009, excluding appendices A and C.

(156) The following plan was submitted on January 11, 2011 by the Governor's designee.

(i) [Reserved]

(ii) Additional materials.

(A) Arizona Department of Environmental Quality.

(*1*) Final Addendum to the Arizona State Implementation Plan Revision, Exemption of Motorcycles from Vehicle Emissions Inspections and Maintenance Program Requirements in Area A, October 2009 (December 2010), adopted by the Arizona Department of Environmental Quality on January 11, 2011.

(157) The following plan was submitted on May 25, 2012 by the Governor's designee.

(i) Incorporation by reference.

(A) Arizona Department of Environmental Quality.

(*1*) Affidavit by Barbara Howe, Law Reference Librarian, Arizona State Library, Archives and Public Records, certifying authenticity of reproduction of Arizona Revised Statutes § 49–451 (*sic*) (corrected to § 49–541) (2001 pocket part), signed May 3, 2012.

(*2*) Arizona Revised Statutes (West Group, 2001 Cumulative Pocket Part): title 49 (the environment), section 49–541 (''Definitions''), subsection 1 [Definition of Area A].

(*3*) Arizona Revised Statutes (Thomson/West, 2008): Title 9 (cities and towns), chapter 4 (general powers), article 8 (miscellaneous), section 9–500.04 (''Air quality control; definitions''), excluding paragraphs A.1, A.2, A.4, and A.10; paragraphs B through G; and paragraph I.

(*4*) Arizona Revised Statutes (West, 2012): Title 11 (counties), chapter 6 (county planning and zoning), article 6 (air quality), section 11–877 (''Air quality control measures'').

(*5*) Arizona Revised Statutes (Thomson/West, 2005 main volume, 2012 Cumulative Pocket Part):

(*i*) Title 49 (the environment), chapter 3 (air quality), article 2 (state air pollution control), section 49–457.01 (''Leaf blower use restrictions and training; leaf blowers equipment sellers; informational material; outreach; applicability''); and

(*ii*) Title 49 (the environment), chapter 3 (air quality), article 3 (county air pollution control), sections 49–474.01

(''Additional board duties in vehicle emissions control areas; definitions''), excluding paragraphs A.1 through A.3, A.9, A.10, paragraphs C through G, and paragraph I; 49–474.05 (''Dust control; training; site coordinators''); and 49–474.06 (''Dust control; subcontractor registration; fee'').

(*6*) Arizona Revised Statutes (Thomson/West, 2008): Title 9 (cities and towns), chapter 4 (general powers), article 8 (miscellaneous), section 9–500.27 (''Off-road vehicle ordinance; applicability; violation; classification''), excluding paragraphs D and E.

(*7*) Arizona Revised Statutes (West, 2012): Title 11 (counties), chapter 6 (county planning and zoning), article 6 (air quality), section 11–871 (''Emissions control; no burn; exemptions; penalty''), excluding paragraphs C through E.

(*8*) Arizona Revised Statutes (West, 2012): Title 28 (transportation), chapter 3 (traffic and vehicle regulation), article 18 (vehicle size, weight and load), section 28–1098 (''Vehicle loads; restrictions; civil penalties''), excluding paragraphs B and C.

(*9*) Arizona Revised Statutes (West, 2012 Cumulative Pocket Part):

(*i*) Title 49 (the environment), chapter 3 (air quality), article 2 (state air pollution control), sections 49–457.03 (''Off-road vehicles; pollution advisory days; applicability; penalties''), excluding paragraphs C and D; and 49–457.04 (''Off-highway vehicle and all-terrain vehicle dealers; informational material; outreach; applicability''); and

(*ii*) Title 49 (the environment), chapter 3 (air quality), article 3 (county air pollution control), section 49–501 (''Unlawful open burning; exceptions; civil penalty; definition''), excluding paragraph A.1, paragraphs B.2 through B.6, and paragraphs D, E, G, and H.

(*10*) Arizona Revised Statutes (West, 2012 Cumulative Pocket Part): Title 49 (the environment), chapter 3 (air quality), article 2 (state air pollution control), section 49–457.05 (''Dust action general permit; best management practices; applicability; definitions''), excluding paragraph C and paragraphs E, F, G, and H.

(*11*) Arizona Department of Environmental Quality, Air Quality Division, Dust Action General Permit, including attachments A, B, and C, issued December 30, 2011.

(ii) *Additional materials*.

(A) Arizona Department of Environmental Quality.

(*1*) *2012 Five Percent Plan for PM–10 for the Maricopa County Nonattainment Area*, and Appendices Volume One and Volume Two, adopted May 23, 2012.

(*2*) *2012 Five Percent Plan for PM–10 for the Pinal County Township 1 North, Range 8 East Nonattainment Area*, adopted May 25, 2012.

(158) The following plan was submitted May 3, 2013, by the Governor's designee.

(i) [Reserved]

(ii) Additional materials.

(A) Arizona Department of Environmental Quality (ADEQ).

(*1*) Arizona State Implementation Plan Revision, Regional Haze Under Section 308 of the Federal Regional Haze Rule (May 2013), excluding:

(*i*) Chapter 10, section 10.7 (regarding ASARCO Hayden Smelter (PM_{10} emissions) and Chemical Lime Company—Nelson Lime Plant);

(*ii*) Chapter 11, except subsection 11.3.1(3) (''Focus on SO_2 and NO_X pollutants'');

(*iii*) Appendix D: chapter I, except for the footnotes in tables 1.1, 1.2 and 1.3 to the entries for AEPCO [Apache], and the entry in table 1.2 for Freeport-McMoRan Miami Smelter; chapter VI, section C (regarding PM_{10} emissions from ASARCO Hayden smelter); chapter XII, section C, and chapter XIII, subsection D; and

(*iv*) Appendix E.

(159) The following plan was submitted on January 23, 2012 by the Governor's Designee.

(i) [Reserved]

(ii) *Additional Materials*.

(A) Arizona Department of Environmental Quality

(*1*) *Final Update of the Limited Maintenance Plan for the Payson PM_{10} Maintenance Area (December 2011)*, adopted by the Arizona Department of Environmental Quality on January 23, 2012.

(160) The following plan was submitted on March 23, 2009, by the Governor's designee.

(i) [Reserved]

(ii) Additional materials.

(A) Arizona Department of Environmental Quality.

(*1*) *MAG Eight-Hour Ozone Redesignation Request and Maintenance Plan for the Maricopa Nonattainment Area* (February 2009), adopted by the Arizona Department of Environmental Quality on March 23, 2009, excluding the appendices.

(161) The following plan revision was submitted on July 28, 2011, and supplemented on May 16, 2014, by the Governor's designee.

(i) Incorporation by reference.

(A) Arizona Department of Environmental Quality.

(*1*) West's Arizona Revised Statutes, 2012–2013 Compact Edition; title 49 (''Environment''), chapter 3 (''Air Quality''), article 2 (''State Air Pollution Control'') section 49–426 (''Permits; duties of director; exceptions; applications; objections; fees''), excluding paragraphs (D), (E)(1), (F), (I), (J), and (M).

(*2*) Arizona Administrative Code, title 18 (''Environmental Quality''), chapter 2 (''Department of Environmental Quality—Air Pollution Control''), supp. 09–1, March 31, 2009: R18–2–608 (''Mineral Tailings''); R18–2–703 (''Standards of Performance for Fossil-fuel Fired Steam Generators and General Fuel-burning Equipment''); R18–2–704 (''Standards of Performance for Incinerators''); R18–2–715 (''Standards of Performance for Existing Primary Copper Smelters; Site-Specific Requirements''), excluding paragraphs (A) through (E); R18–2–720 (''Standards of Performance for Existing Lime Manufacturing Plants''); R18–2–724 (''Standards of Performance for Fossil-fuel Fired Industrial and Commercial Equipment''); R18–2–729 (''Standards of Performance for Cotton Gins''); and R18–2–730 (''Standards of Performance for Unclassified Sources'').

(*3*) Arizona Administrative Code, title 18 (''Environmental Quality''), chapter 2 (''Department of Environmental Quality—Air Pollution Control''), supp. 09–2, June 30, 2009: R18–2–732 (''Standards of Performance for Existing Hospital/Medical/Infectious Waste Incinerators'').

(*4*) Arizona Administrative Code, title 18 (''Environmental Quality''), chapter 2 (''Department of Environmental Quality—Air Pollution Control''), supp. 12–2, June 30, 2012: R18–2–204 (''Carbon Monoxide''); R18–2–719 (''Standards of Performance for Existing Stationary Rotating Machinery''); and Appendix 2 (''Test Methods and Protocols'').

(*5*) Arizona Testing Manual for Air Pollutant Emissions, Revision F, March 1992, excluding sections 2 through 7.

(*6*) Arizona Administrative Code, Title 18, ''Environmental Quality'', chapter 2,''Department of Environmental Quality—Air Pollution Control'', R18–2–311, ''Test Methods and Procedures,'' and R18–2–312, ''Performance Tests,'' effective November 15, 1993.

(162) The following plan revision was submitted on October 29, 2012, and supplemented on September 6, 2013 and July 2, 2014, by the Governor's designee.

(i) Incorporation by reference.

(A) Arizona Department of Environmental Quality

(*1*) West's Arizona Revised Statutes, 2012–2013 Compact Edition; title 49 (''Environment''), chapter 3 (''Air Quality''), section 49–402 (''State and county control'').

(*2*) Arizona Administrative Code, title 18 (''Environmental Quality''), chapter 2 (''Department of Environmental Quality—Air Pollution Control''), supp. 12–2, June 30, 2012: R18–2–101 (''Definitions''), excluding definitions (2), (20), (32), (87), (109), and (122); R18–2–102 (''Incorporated Materials''); R18–2–201 (''Particulate matter: PM_{10} and $PM_{2.5}$''); R18–2–202 (''Sulfur Oxides (Sulfur Dioxide)''); R18–2–203 (''Ozone: One-hour Standard and Eight-hour Averaged Standard'') R18–2–205 (''Nitrogen Oxides (Nitrogen Dioxide)''); R18–2–206 (''Lead''); R18–2–210 (''Attainment, Nonattainment, and Unclassifiable Area Designations''); R18–2–215 (''Ambient air quality monitoring methods and procedures''); R18–2–216 (''Interpretation of Ambient Air Quality Standards and Evaluation of Air Quality Data''); and R18–2–701 (''Definitions'').

(*3*) Arizona Administrative Code, Title 18, ''Environmental Quality,''

chapter 2 ''Department of Environmental Quality—Air Pollution Control,'' R18–2–101, ''Definitions,'' only definition nos. (2), (32), (87), (109), and (122), effective August 7, 2012; R18–2–217, ''Designation and Classification of Attainment Areas,'' effective November 15, 1993; R18–2–218, ''Limitation of Pollutants in Classified Attainment Areas,'' effective August 7, 2012; R18–2–301, ''Definitions,'' effective August 7, 2012; R18–2–302, ''Applicability; Registration; Classes of Permits,'' effective August 7, 2012; R18–2–302.01, ''Source Registration Requirements,'' effective August 7, 2012; R18–2–303, ''Transition from Installation and Operating Permit Program to Unitary Permit Program; Registration Transition; Minor NSR Transition,'' effective August 7, 2012; R18–2–304, ''Permit Application Processing Procedures,'' effective August 7, 2012; R18–2–306, ''Permit Contents,'' effective December 20, 1999; R18–2–306.01, ''Permits Containing Voluntarily Accepted Emission Limitations and Standards,'' effective January 1, 2007; R18–2–306.02, ''Establishment of an Emissions Cap,'' effective September 22, 1999; R18–2–315, ''Posting of Permit,'' effective November 15,1993; R18–2–316, ''Notice by Building Permit Agencies,'' effective May 14, 1979; R18–2–319, ''Minor Permit Revisions,'' August 7, 2012; R18–2–320, ''Significant Permit Revisions,'' effective August 7, 2012; R18–2–321, ''Permit Reopenings; Revocation and Reissuance; Termination,'' effective August 7, 2012; R18–2–323, ''Permit Transfers,'' effective February 3, 2007; R18–2–330, ''Public Participation,'' effective August 7, 2012; R18–2–332, ''Stack Height Limitation,'' effective November 15, 1993; R18–2–334, ''Minor New Source Review'' effective August 7, 2012; R18–2–401 ''Definitions,'' effective August 7, 2012; R18–2–402 ''General,'' effective August 7, 2012; R18–2–403 ''Permits for Sources Located in Nonattainment Areas,'' effective August 7, 2012; R18–2–404, ''Offset Standards,'' effective August 7, 2012; R18–2–405, ''Special Rule for Major Sources of VOC or Nitrogen Oxides in Ozone Nonattainment Areas Classified as Serious or Severe,'' effective August 7, 2012; R18–2–406, ''Permit Requirements for Sources Located in Attainment and Unclassifiable Areas,'' effective August 7, 2012; R18–2–407, ''Air Quality Impact Analysis and Monitoring Requirements,'' excluding subsection (H)(1)(c), effective August 7, 2012; R18–2–409, ''Air Quality Models,'' effective November 15, 1993; and R18–2–412, ''PALs'' effective August 7, 2012.

(*4*) Arizona Revised Statutes, title 49, ''Environment,'' chapter 1 ''General Provisions'', section 49–107, ''Local delegation of state authority,'' effective July 1, 1987.

(ii) Additional materials.

(A) Arizona Department of Environmental Quality.

(*1*) *Setting Applicability Thresholds*, pages 1547–1549 in Appendix A to ''State Implementation Plan Revision: New Source Review'' adopted on October 29, 2012.

(*2*) Memorandum, ''Proposed Final Permits to be Treated as Appealable Agency Actions,'' dated February 10, 2015, from Eric Massey, Air Quality Division Director to Balaji Vaidyanathan, Permit Section Manager, submitted on February 23, 2015.

(*3*) ''State Implementation Plan Revision: New Source Review—Supplement,'' relating to the division of jurisdiction for New Source Review in Arizona, adopted on July 2, 2014.

(163) The following plan was submitted on August 27, 2012 by the Governor's Designee.

(i) Incorporation by Reference.

(A) Maricopa County Air Quality Department.

(*1*) Rule 313, ''Incinerators, Burn-Off Ovens and Crematories,'' revised May 9, 2012.

(164) A plan revision was submitted on September 6, 2013 by the Governor's Designee.

(i) [Reserved]

(ii) Additional materials.

(A) Arizona Department of Environmental Quality.

(1) ''Arizona State Implementation Plan Revision for the Nogales $PM_{2.5}$ Nonattainment Area'', dated September 2013, including appendices A and B.

(165) The following plan was submitted May 13, 2014, by the Governor's designee:

(i) *Incorporation by reference.*

(A) Arizona Department of Environmental Quality.

(*1*) Significant Revision No. 59195 to Air Quality Control Permit No. 55412, excluding section V.D., issued May 13, 2014.

(ii) Additional materials.

(A) Arizona Department of Environmental Quality.

(1) Arizona State Implementation Plan, Revision to the Arizona Regional Haze Plan for Arizona Electric Power Cooperative, Incorporated, Apache Generating Station, excluding the appendices.

(166) The following plan was submitted on October 14, 2011, by the Governor's designee.

(i) [Reserved]

(ii) Additional materials.

(A) Arizona Department of Environmental Quality.

(*1*) Arizona State Implementation Plan Revision under Clean Air Act Section 110(a)(1) and (2); Implementation of the 2008 Lead National Ambient Air Quality Standards, excluding the appendices.

(167) The following plan was submitted on December 27, 2012 by the Governor's designee.

(i) [Reserved]

(ii) Additional materials.

(A) Arizona Department of Environmental Quality.

(*1*) Arizona State Implementation Plan Revision under Clean Air Act Section 110(a)(1) and (2); 2008 8-hour Ozone NAAQS, excluding the appendices.

(168) The following plan was submitted on December 6, 2013 by the Governor's designee.

(i) *Incorporation by reference.*

(A) Maricopa County Air Quality Department.

(*1*) Maricopa County Air Pollution Control Regulations, Rule 100 (''General Provisions and Definitions''), section 100 (''General''), subsection 108 (''Hearing Board''), revised September 25, 2013.

(169) The following plan was submitted on December 19, 2013 by the Governor's designee.

(i) [Reserved]

(ii) Additional materials.

(A) Pima County Department of Environmental Quality.

(*1*) Board of Supervisors of Pima County, Arizona, Ordinance No. 1993–128, Section 1, 17.040.190 ''Composition'' Section 6, 17.24.040 ''Reporting for compliance evaluations'' adopted September 28, 1993.

(*2*) Board of Supervisors of Pima County, Arizona, Ordinance 2005–43, Chapter 17.12, Permits and Permit Revisions, section 2,17.12.040 ''Reporting Requirements'' adopted April 19, 2005.

(170) The following plan was submitted on September 4, 2014 by the Governor's designee.

(i) *Incorporation by reference.*

(A) Pinal County Air Quality Control District.

(*1*) Pinal County Board of Supervisors, Resolution No. 072314–AQ1, 1–3–140, Definitions, 74, Hearing Board, including new text that is underlined and excluding removed text which was struck by the board, effective July 23, 2014.

(171) The following plan was submitted on September 2, 2014 by the Governor's designee.

(i) Incorporation by reference.

(A) Arizona Department of Environmental Quality.

(*1*) House Bill 2128, effective April 22, 2014, excluding sections 1 through 4, and 9 (including the text that appears in all capital letters and excluding the text that appears in strikethrough).

(ii) Additional materials.

(A) Arizona Department of Environmental Quality.

(*1*) *MAG 2014 State Implementation Plan Revision for the Removal of Stage II Vapor Recovery Controls in the Maricopa Eight-Hour Ozone Nonattainment Area* (August 2014), adopted by the Regional Council of the Maricopa Association of Governments on August 27, 2014, excluding appendix A, exhibit 2 (''Arizona Revised Statutes Listed in Table 1–1'').

(172) The following plan was submitted July 2, 2014, by the Governor's designee.

(i) [Reserved]

(ii) *Additional materials.*

(A) Arizona Department of Environmental Quality (ADEQ).

(*1*) *MAG 2014 Eight-Hour Ozone Plan—Submittal of Marginal Area Requirements for the Maricopa Nonattainment Area* (June 2014), excluding:

(*i*) Sections titled ''A Nonattainment Area Preconstruction Permit Program—CAA section 182(a)(2)(C),'' ''New Source Review—CAA, Title I, Part D,''

and ''Offset Requirements: 1:1 to 1 (Ratio of Total Emission Reductions of Volatile Organic Compounds to Total Increased Emissions)—CAA Section 182(a)(4)'' on pages 8 and 9 and section titled ''Meet Transportation Conformity Requirements—CAA Section 176(c)'' on pages 10 and 11.

(*ii*) Appendices A and B.

(173) The following plan was submitted on April 2, 2013 by the Governor's designee.

(i) [Reserved]

(ii) Additional materials.

(A) Arizona Department of Environmental Quality.

(*1*) *MAG 2013 Carbon Monoxide Maintenance Plan for the Maricopa County Area*, adopted by the Maricopa Association of Governments on March 27, 2013.

(174) The following plan was submitted on December 3, 2015 by the Governor's designee.

(i) [Reserved]

(ii) Additional materials.

(A) Arizona Department of Environmental Quality.

(*1*) SIP Revision: Clean Air Act Section 110(a)(2)(D), 2008 Ozone National Ambient Air Quality Standards (December 3, 2015).

[37 FR 10849, May 31, 1972. Redesignated and amended at 81 FR 85040, Nov. 23, 2016]

EDITORIAL NOTE: For FEDERAL REGISTER citations affecting § 52.152, see the List of CFR Sections Affected, which appears in the Finding Aids section of the printed volume and at *www.fdsys.gov*.

Subpart E—Arkansas

§ 52.170 Identification of plan.

(a) *Purpose and scope*. This section sets forth the applicable State Implementation Plan (SIP) for Arkansas under section 110 of the Clean Air Act, 42 U.S.C. 7410, and 40 CFR part 51 to meet national ambient air quality standards.

(b) *Incorporation by reference*. (1) Material listed in paragraphs (c) and (d) of this section with an EPA approval date prior to December 1, 2005, was approved for incorporation by reference by the Director of the Federal Register in accordance with 5 U.S.C. 552(a) and 1 CFR part 51. Material is incorporated as it exists on the date of the approval, and notice of any change in the material will be published in the FEDERAL REGISTER. Entries in paragraphs (c) and (d) of this section with EPA approval dates after December 1, 2005, will be incorporated by reference in the next update to the SIP compilation.

(2) EPA Region 6 certifies that the rules/regulations provided by EPA in the SIP compilation at the addresses in paragraph (b)(3) of this section are an exact duplicate of the officially promulgated State rules/regulations that have been approved as part of the State implementation plan as of December 1, 2005.

(3) Copies of the materials incorporated by reference may be inspected at the Region 6 EPA Office at 1445 Ross Avenue, Suite 700, Dallas, Texas, 75202–2733; the EPA, Air and Radiation Docket and Information Center, Air Docket (6102), 401 M St., SW., Washington, DC 20460; or at the National Archives and Records Administration (NARA). For information on the availability of this material at NARA, call 202–741–6030, or go to: *http://www.archives.gov/federal_register/code_of_federal_regulations/ibr_locations.html*.

(c) *EPA approved regulations*.

EPA-APPROVED REGULATIONS IN THE ARKANSAS SIP

State citation	Title/subject	State submittal/effective date	EPA approval date	Explanation
Regulation No. 19: Regulations of the Arkansas Plan of Implementation for Air Pollution Control				
Chapter 1: Title, Intent and Purpose				
Reg. 19.101	Title	01/25/09	03/04/15 (80 FR 11573).	
Reg. 19.102	Applicability	02/03/05	04/12/07 (72 FR 18394).	
Reg. 19.103	Intent and Construction	01/25/09	03/04/15 (80 FR 11573).	
Reg. 19.104	Severability	11/18/12	03/04/15 (80 FR 11573).	

EPA-APPROVED REGULATIONS IN THE ARKANSAS SIP—Continued

State citation	Title/subject	State submittal/effective date	EPA approval date	Explanation
Chapter 2: Definitions				
Chapter 2	Definitions	3/24/2017	12/21/2017, 82 FR 60517.	
Chapter 3: Protection of the National Ambient Air Quality Standards				
Reg. 19.301	Purpose	02/03/05	04/12/07 (72 FR 18394).	
Reg. 19.302	Department Responsibilities	02/03/05	04/12/07 (72 FR 18394).	
Reg. 19.303	Regulated Sources Responsibilities	02/03/05	04/12/07 (72 FR 18394).	
Reg. 19.304	Delegated Federal Programs	01/25/09	03/04/15 (80 FR 11573).	
Chapter 4: Minor Source Review				
Reg. 19.401	General Applicability	02/03/05	04/12/07 (72 FR 18394).	
Reg. 19.402	Approval Criteria	02/03/05	04/12/07 (72 FR 18394).	
Reg. 19.403	Owner/Operator's Responsibilities	02/03/05	04/12/07 (72 FR 18394).	
Reg. 19.404	Required Information	02/03/05	04/12/07 (72 FR 18394).	
Reg. 19.405	Action on Application	02/03/05	04/12/07 (72 FR 18394).	
Reg. 19.406	Public Participation	02/03/05	04/12/07 (72 FR 18394).	
Reg. 19.407	Permit Amendments	02/03/05	04/12/07 (72 FR 18394).	
Reg. 19.408	Exemption from Permitting	02/03/05	04/12/07 (72 FR 18394).	
Reg. 19.409	Transition	02/03/05	04/12/07 (72 FR 18394).	
Reg. 19.410	Permit Revocation and Cancellation	02/03/05	04/12/07 (72 FR 18394).	
Reg. 19.411	General Permits	02/03/05	04/12/07 (72 FR 18394).	
Reg. 19.412	Dispersion Modeling	02/03/05	04/12/07 (72 FR 18394).	
Reg. 19.413	Confidentiality	02/03/05	04/12/07 (72 FR 18394).	
Chapter 5: General Emission Limitations Applicability to Equipment				
Reg. 19.501	Purpose	02/03/05	04/12/07 (72 FR 18394).	
Reg. 19.502	General Regulations	09/13/14	03/04/15 (80 FR 11573).	
Reg. 19.503	Visible Emission Regulations	01/25/09	03/04/15 (80 FR 11573).	
Reg. 19.504	Stack Height/Dispersion Regulations	01/25/09	03/04/15 (80 FR 11573).	
Reg. 19.505	Revised Emissions Limitation	01/25/09	03/04/15 (80 FR 11573).	
Chapter 6: Upset and Emergency Conditions				
Reg. 19.601	Upset Conditions	01/25/09	03/04/15 (80 FR 11573).	
Reg. 19.602	Emergency Conditions	01/25/09	03/04/15 (80 FR 11573).	
Chapter 7: Sampling, Monitoring, and Reporting Requirements				
Reg. 19.701	Purpose	02/03/05	04/12/07 (72 FR 18394).	
Reg. 19.702	Air Emissions Sampling	01/25/09	03/04/15 (80 FR 11573).	
Reg. 19.703	Continuous Emissions Monitoring	01/25/09	03/04/15 (80 FR 11573).	
Reg. 19.704	Notice of Completion	02/03/05	04/12/07 (72 FR 18394).	
Reg. 19.705	Recordkeeping and Reporting Requirements.	6/22/07	1/15/09 (74 FR 2383).	
Reg. 19.706	Public Availability of Emissions Data	02/03/05	04/12/07 (72 FR 18394).	
Chapter 9: Prevention of Significant Deterioration				
Reg. 19.901	Title	02/03/05	04/12/07 (72 FR 18394).	
Reg. 19.902	Purposes	1/25/2009	4/2/13 (78 FR 19596).	
Reg 19.903	Definitions	09/13/14	03/04/15 (80 FR 11573).	
Section 19.904	Adoption of Regulations	12/01/2014	7/7/2015 (80 FR 38625).	
Chapter 10: Regulations for the Control of Volatile Organic Compounds in Pulaski County				
Reg. 19.1001	Title	02/03/05	04/12/07 (72 FR 18394).	
Reg. 19.1002	Purpose	01/25/09	03/04/15 (80 FR 11573).	
Reg. 19.1003	Definitions	01/25/09	03/04/15 (80 FR 11573).	
Reg. 19.1004	General Provisions	01/25/09	03/04/15 (80 FR 11573).	
Reg. 19.1005	Provisions for Specific Processes	01/25/09	03/04/15 (80 FR 11573).	
Reg. 19.1006	Severability	02/03/05	04/12/07 (72 FR 18394).	
Chapter 11: Major Source Permitting Procedures				
Chapter 11	Major Source Permitting Procedures	01/25/09	03/04/15 (80 FR 11573).	

EPA-APPROVED REGULATIONS IN THE ARKANSAS SIP—Continued

State citation	Title/subject	State submittal/effective date	EPA approval date	Explanation
Chapter 13: Stage I Vapor Recovery				
Reg. 19.1301 ..	Provisions for Specific Processes	01/25/09	03/04/15 (80 FR 11573).	
Reg. 19.1302 ..	Applicability	02/03/05	04/12/07 (72 FR 18394).	
Reg. 19.1303 ..	Definitions	01/25/09	03/04/15 (80 FR 11573).	
Reg. 19.1304 ..	Exemptions	02/03/05	04/12/07 (72 FR 18394).	
Reg. 19.1305 ..	Prohibited Activities	02/03/05	04/12/07 (72 FR 18394).	
Reg. 19.1306 ..	Record Keeping	02/03/05	04/12/07 (72 FR 18394).	
Reg. 19.1307 ..	Inspections	02/03/05	04/12/07 (72 FR 18394).	
Reg. 19.1308 ..	Vapor Recovery Systems	02/03/05	04/12/07 (72 FR 18394).	
Reg. 19.1309 ..	Gasoline Delivery Vessels	02/03/05	04/12/07 (72 FR 18394).	
Reg. 19.1310 ..	Owner/Operator Responsibility	02/03/05	04/12/07 (72 FR 18394).	
Reg. 19.1311 ..	Test Methods	02/03/05	04/12/07 (72 FR 18394).	
Reg. 19.1312 ..	Effective Date	02/03/05	04/12/07 (72 FR 18394).	
Chapter 14—CAIR NO_X Ozone Season Trading Program General Provisions				
Reg. 19.1401 ..	Adoption of Regulations	9/16/2009	4/17/2014 (79 FR 21631).	
Reg. 19.1402 ..	State Trading Budget	07/15/07	09/26/07 (72 FR 54556).	
Reg. 19.1403 ..	Timing Requirements for CAIR NO_X Ozone Season Allowance Allocations.	07/15/07	09/26/07 (72 FR 54556).	
Reg. 19.1404 ..	CAIR NO_X Ozone Season Allowance Allocations.	9/16/2009	4/17/2014 (79 FR 21631).	
Chapter 15: Regional Haze				
Reg. 19.1501 ..	Purpose	1/25/2009	3/12/2012 (77 FR 14604)	
Reg, 19.1502 ..	Definitions	1/25/2009	3/12/2012 (77 FR 14604)	
Reg. 19.1503 ..	BART Eligible Sources	1/25/2009	3/12/2012 (77 FR 14604)	
Reg. 19.1504 ..	Facilities Subject-to-BART	1/25/2009	3/12/2012 (77 FR 14604)	Under (A): The identification of sources subject to BART is approved, except for not identifying the 6A and 9A Boilers at the Georgia Pacific Crossett Mill, which we find are subject to BART. Under (B): The requirement for BART installation and operation as expeditiously as practicable, but no later than 5 years after EPA approval is partially approved and partially disapproved, such that the partial approval is for the BART determinations we are approving and the partial disapproval is for the BART determinations we are disapproving; and the requirement for BART installation and operation no later than 6 years after the effective date of the State regulation is disapproved.
Reg. 19.1505 ..	BART Requirements	1/25/2009	3/12/2012 (77 FR 14604)	The following portions of Reg. 19.1505 are disapproved: (A)(1) and (2), (B), (C), (D)(1) and (2), (E), (F)(1) and (2), (G)(1) and (2), (H), (I)(1) and (2), (J)(1) and (2), (K), (L), (M)(1), and (N).

EPA-APPROVED REGULATIONS IN THE ARKANSAS SIP—Continued

State citation	Title/subject	State submittal/effective date	EPA approval date	Explanation
Reg. 19.1506 ..	Compliance Provisions	1/25/2009	3/12/2012 (77 FR 14604)	The requirement to demonstrate compliance with the BART limits listed in Reg. 19.1505 (A)(1) and (2), (B), (C), (D)(1) and (2), (E), (F)(1) and (2), (G)(1) and (2), (H), (I)(1) and (2), (J)(1) and (2), (K), (L), (M)(1), and (N) is disapproved.
Reg. 19.1507 ..	Permit Reopening	1/25/2009	3/12/2012 (77 FR 14604)	
Appendix A: Insignificant Activities List				
Appendix A	Insignificant Activities List	02/03/05	04/12/07 (72 FR 18394).	
Appendix B: National Ambient Air Quality Standards List				
Appendix B	National Ambient Air Quality Standards List.	9/13/2014	3/4/2015 (80 FR 11573).	
Regulation 26: Regulations of the Arkansas Operating Permit Program				
Chapter 3: Requirements for Permit Applicability				
Section 26.301	Requirement for a permit	08/10/00	10/9/01 (66 FR 51312).	
Section 26.302	Sources subject to permitting	08/10/00	10/9/01 (66 FR 51312).	
Chapter 4: Applications for Permits				
Section 26.401	Duty to apply	08/10/00	10/9/01 (66 FR 51312).	
Section 26.402	Standard application form and required information.	08/10/00	10/9/01 (66 FR 51312).	
Section 26.407	Complete application	08/10/00	10/9/01 (66 FR 51312).	
Section 26.409	Applicants duty to supplement correct application.	08/10/00	10/9/01 (66 FR 51312).	
Section 26.410	Certification by responsible official	08/10/00	10/9/01 (66 FR 51312).	
Chapter 5: Action on Application				
Section 26.501	Action on part 70 permit applications	08/10/00	10/9/01 (66 FR 51312) ...	Subsection B Not in SIP.
Section 26.502	Final action on permit application	08/10/00	10/9/01 (66 FR 51312).	
Chapter 6: Permit Review by the Public, Affected States, and EPA				
Section 26.601	Untitled introduction to Chapter 6	08/10/00	10/9/01 (66 FR 51312).	
Section 26.602	Public participation	08/10/00	10/9/01 (66 FR 51312) ...	Only Subsection A(1), A(2), A(5) and D in SIP.
Section 26.603	Transmission of permit information to the Administrator.	08/10/00	10/9/01 (66 FR 51312).	
Section 26.604	Review of draft permit by affected States.	08/10/00	10/9/01 (66 FR 51312).	
Regulation No. 31: Nonattainment New Source Review Requirements				
Chapter 1: Title, Intent, and Purpose				
Reg. 31.101	Title	07/03/06	04/12/07 (72 FR 18394).	
Reg. 31.102	Applicability	07/03/06	04/12/07 (72 FR 18394).	
Reg. 31.103	Severability	07/03/06	04/12/07 (72 FR 18394).	
Chapter 2: Definitions				
Chapter 2	Definitions	07/03/06	04/12/07 (72 FR 18394).	
Chapter 3: Preconstruction review				
Reg. 31.301	Requirement for a Permit	07/03/06	04/12/07 (72 FR 18394).	
Reg. 31.302	Required Information	07/03/06	04/12/07 (72 FR 18394).	
Reg. 31.303	Approval Criteria	07/03/06	04/12/07 (72 FR 18394).	

EPA-APPROVED REGULATIONS IN THE ARKANSAS SIP—Continued

State citation	Title/subject	State submittal/effective date	EPA approval date	Explanation
Reg. 31.304	Offsets	07/03/06	04/12/07 (72 FR 18394).	
Reg. 31.305	Zones Targeted for Economic Development.	07/03/06	04/12/07 (72 FR 18394).	
Reg. 31.306	Control Technology Information	07/03/06	04/12/07 (72 FR 18394).	
Reg. 31.307	Approval to Construct	07/03/06	04/12/07 (72 FR 18394).	
Reg. 31.308	Applicability of Nonattainment Review	07/03/06	04/12/07 (72 FR 18394).	
Reg. 31.309	Applicability of Other Regulations	07/03/06	04/12/07 (72 FR 18394).	
Chapter 4: Applicability Tests				
Reg. 31.401	Actual-to-Projected-Actual Applicability Test.	07/03/06	04/12/07 (72 FR 18394).	
Reg. 31.402	Actual-to-Potential Test	07/03/06	04/12/07 (72 FR 18394).	
Reg. 31.403	[Reserved]	07/03/06	04/12/07 (72 FR 18394).	
Reg. 31.404	[Reserved]	07/03/06	04/12/07 (72 FR 18394).	
Reg. 31.405	Emission Baseline Credits	07/03/06	04/12/07 (72 FR 18394).	
Reg. 31.406	Relaxation of Limits	07/03/06	04/12/07 (72 FR 18394).	
Reg. 31.407	Modifications to Existing Units	07/03/06	04/12/07 (72 FR 18394).	
Reg. 31.408	Public Availability of Information	07/03/06	04/12/07 (72 FR 18394).	
Reg. 31.409	Applicability of Nitrogen Oxides	07/03/06	04/12/07 (72 FR 18394).	
Reg. 31.410	Offset Requirements	07/03/06	04/12/07 (72 FR 18394).	
Reg. 31.411	PM_{10} Precursors	07/03/06	04/12/07 (72 FR 18394).	
Chapter 5: [Reserved]				
Chapter 6: [Reserved]				
Chapter 7: [Reserved]				
Chapter 8: Actual PALS				
Reg. 31.801	Applicability	07/03/06	04/12/07 (72 FR 18394).	
Reg. 31.802	Definitions	07/03/06	04/12/07 (72 FR 18394).	
Reg. 31.803	Permit Application Requirements	07/03/06	04/12/07 (72 FR 18394).	
Reg. 31.804	General Requirements for Establishing PALs.	07/03/06	04/12/07 (72 FR 18394).	
Reg. 31.805	Public Participation Requirement for PALs.	07/03/06	04/12/07 (72 FR 18394).	
Reg. 31.806	Setting the 10-year Actuals PAL Level	07/03/06	04/12/07 (72 FR 18394).	
Reg. 31.807	Contents of the PAL Permit	07/03/06	04/12/07 (72 FR 18394).	
Reg. 31.808	Reopening of the PAL Permit	07/03/06	04/12/07 (72 FR 18394).	
Reg. 31.809	PAL Effective Period	07/03/06	04/12/07 (72 FR 18394).	
Reg. 31.810	Expiration of a PAL	07/03/06	04/12/07 (72 FR 18394).	
Reg. 31.811	Renewal of a PAL	07/03/06	04/12/07 (72 FR 18394).	
Reg. 31.812	Increasing a PAL During the PAL Effective Period.	07/03/06	04/12/07 (72 FR 18394).	
Reg. 31.813	Monitoring Requirements for PALs	07/03/06	04/12/07 (72 FR 18394).	
Reg. 31.814	Recordkeeping Requirements	07/03/06	04/12/07 (72 FR 18394).	
Reg. 31.815	Reporting and Notification Requirements.	07/03/06	04/12/07 (72 FR 18394).	
Reg. 31.816	Transition Requirements	07/03/06	04/12/07 (72 FR 18394).	
Chapter 9: Effective Date				
Reg. 31.901	Effective Date	07/03/06	04/12/07 (72 FR 18394).	
Regulation No. 9: Fee Regulation				
Chapter 1	Title	7/9/2012	4/30/2015, 80 FR 24216.	

EPA-APPROVED REGULATIONS IN THE ARKANSAS SIP—Continued

State citation	Title/subject	State submittal/effective date	EPA approval date	Explanation
Chapter 2	Definitions	7/9/2012	4/30/2015, 80 FR 24216	The following definitions do not relate to the air program and are not being approved into the SIP: ''Category'', ''Certificate'', ''Confined Animal Operation'', ''Discretionary Major Facility'', ''Evaluation'', ''Laboratory'', ''Major Municipal Facility'', ''Non-Municipal Major Facility'', ''Parameter'', ''Program''.
Chapter 3	Permit Fee Payment	7/9/2012	4/30/2015, 80 FR 24216.	
Chapter 5	Air Permit Fees	7/9/2012	4/30/2015, 80 FR 24216.	
Chapter 9	Administrative Procedures	7/9/2012	4/30/2015, 80 FR 24216.	

(d) *EPA-approved State source-specific requirements.*

EPA-APPROVED ARKANSAS SOURCE-SPECIFIC REQUIREMENTS

Name of source	Permit No.	State approval/effective date	EPA approval date	Comments
None.				

(e) *EPA-approved nonregulatory provisions and quasi-regulatory measures.*

EPA-APPROVED STATUTES IN THE ARKANSAS SIP

State citation	Title/subject	State submittal/effective date	EPA approval date	Explanation
Arkansas Water and Air Pollution Control Act—Part I				
82.1901	Title of Act	01/28/72	05/31/72 (37 FR 10841)	Ref 52.200(a) & (b).
82.1902	Definitions	01/28/72	05/31/72 (37 FR 10841)	Ref 52.200(a) & (b).
82.1903	Pollution Control Commission.	01/28/72	05/31/72 (37 FR 10841)	Ref 52.200(a) & (b).
82.1904	Powers and Duties of Commission.	01/28/72	05/31/72 (37 FR 10841)	Ref 52.200(a) & (b).
82.1905	Persons Operating Disposal System—Furnishing Information and Permitting Examinations and Surveys.	01/28/72	05/31/72 (37 FR 10841)	Ref 52.200(a) & (b).
82.1906	Hearing Before Commission or Member—Appeal Procedure.	01/28/72	05/31/72 (37 FR 10841)	Ref 52.200(a) & (b).
82.1907	Co-operation with Agency of Another State or United States.	01/28/72	05/31/72 (37 FR 10841)	Ref 52.200(a) & (b).
82.1908	Actions Declared Public Nuisance—Permit to Construct, Make Changes in or Operate Disposal System—Submission of Plans.	01/28/72	05/31/72 (37 FR 10841)	Ref 52.200(a) & (b).
82.1909	Violation of Act a Misdemeanor—Pollution a Nuisance—Abatement.	01/28/72	05/31/72 (37 FR 10841)	Ref 52.200(a) & (b).

EPA-APPROVED STATUTES IN THE ARKANSAS SIP—Continued

State citation	Title/subject	State submittal/ effective date	EPA approval date	Explanation
Arkansas Environmental Permit Fees Act (Act 817 of 1983)				
82–1916 thru 82–1921	Permit Fees Act	12/16/85	11/12/86 (51 FR 40975)	Ref 522.200(c)(24).
Arkansas Water and Air Pollution Control Act—Part II				
82–1931	Air Pollution-State Policy	01/28/72	05/31/72 (37 FR 10841)	Ref 52.200(a) & (b).
82–1932	Purpose of Act	01/28/72	05/31/72 (37 FR 10841)	Ref 52.200(a) & (b).
82–1933	Definitions	01/28/72	05/31/72 (37 FR 10841)	Ref 52.200(a) & (b).
82–1934	Exemptions	01/28/72	05/31/72 (37 FR 10841)	Ref 52.200(a) & (b).
82–1935	Powers of Commission	01/28/72	05/31/72 (37 FR 10841)	Ref 52.200(a) & (b).
82–1936	Factors in Exercise of Commission Powers.	01/28/72	05/31/72 (37 FR 10841)	Ref 52.200(a) & (b).
82–1937	Industrial Secrets Confidential—Revealing a Misdemeanor.	11/25/85	08/04/86 (51 FR 27840)	Ref 52.200(c)(23).
82–1938	Unlawful Acts	01/28/72	05/31/72 (37 FR 10841)	Ref 52.200(a) & (b).
82–1939	Variance from Regulations.	01/28/72	05/31/72 (37 FR 10841)	Ref 52.200(a) & (b).
82–1940	Application of Water Pollution Provisions.	01/28/72	05/31/72 (37 FR 10841)	Ref 52.200(a) & (b).
82–1941	Political Subdivision Forbidden to Legislate on Air Pollution.	01/28/72	05/31/72 (37 FR 10841)	Ref 52.200(a) & (b).
82–1942	Radiation Control Law Not Amended or Repealed—No Authority to Commission Over Employer-Employee Relationships.	01/28/72	05/31/72 (37 FR 10841)	Ref 52.200(a) & (b).
82–1943	Private Rights Unchanged	01/28/72	05/31/72 (37 FR 10841)	Ref 52.200(a) & (b).
Small Business Assistance Program Act (Act 251 of 1993)				
Act 251	SBAP Act	02/26/93	03/08/95 (60 FR 12691)	Ref 52.200(c)(31).

EPA-APPROVED CONTROL MEASURES IN THE ARKANSAS SIP

Control measures	Applicable geographic or nonattainment area	State submittal/ effective date	EPA approval date	Explanation
Air Quality Surveillance	Statewide	04/24/80	08/06/81 (46 FR 40005)	Ref 52.200(c)(6) & (20).
Lead SIP	Statewide	12/10/79	04/16/82 (47 FR 16328)	Ref 52.200(c)(17).
Protection of Visibility in Mandatory Class I Federal Areas.	Statewide	06/12/85	02/10/86 (51 FR 4910)	Ref 52.200(c)(22).
Part II of the Visibility Protection Plan.	Statewide	10/09/87	07/21/88 (53 FR 27514)	Ref 52.200(c)(25).
Good Engineering Practice Stack Height Regulations.	Statewide	06/1/87	02/23/89 (54 FR 7764)	Ref 52.200(c)(26).
Small Business Stationary Source Technical and Environmental Compliance Assistance Program.	Statewide	11/06/92	03/08/95 (60 FR 12691)	Ref 52.200(c)(31).

EPA-APPROVED NON-REGULATORY PROVISIONS AND QUASI-REGULATORY MEASURES IN THE ARKANSAS SIP

Name of SIP provision	Applicable geographic or nonattainment area	State submittal/ effective date	EPA approval date	Explanation
Emissions Inventory for Crittenden County.	Crittenden County	6/22/07	1/15/09 (74 FR 2383).	

EPA-APPROVED NON-REGULATORY PROVISIONS AND QUASI-REGULATORY MEASURES IN THE ARKANSAS SIP—Continued

Name of SIP provision	Applicable geographic or nonattainment area	State submittal/effective date	EPA approval date	Explanation
8-Hour Ozone Maintenance plan for the Crittenden County, Arkansas Area.	Crittenden, Shelby County.	2/26/09	3/24/10 (75 FR 14077).	
Interstate Transport for the 1997 ozone and $PM_{2.5}$ NAAQS (Noninterference with measures required to protect visibility in any other State).	Statewide	3/28/08	3/12/12 (77 FR 14604)	Noninterference with measures required to protect visibility in any other State partially approved 3/12/12.
Regional Haze SIP	Statewide	9/23/08, 8/3/10	3/12/12 (77 FR 14604)	The following portions are partially approved and partially disapproved:
(a) Identification of affected Class I areas.				(a) Identification of best available retrofit technology (BART) eligible sources and subject to BART sources;
(b) Determination of baseline and natural visibility conditions.				(b) requirements for best available retrofit technology (BART);
(c) Determination of the Uniform Rate of Progress.				(c) the Arkansas Regional Haze Rule; and
(d) Reasonable progress goal consultation and long term strategy consultation.				(d) Long Term Strategy. (See § 52.173(a)).
(e) Coordination regional haze and reasonably attributable visibility impairment.				
(f) Monitoring Strategy and other implementation requirements.				
(g) Commitment to submit periodic Regional Haze SIP revisions and periodic progress reports describing progress towards the reasonable progress goals.				
(h) Commitment to make a determination of the adequacy of the existing SIP at the time a progress report is submitted.				
(i) Coordination with States and Federal Land Managers.				
(j) The following best available retrofit technology (BART) determinations: PM BART determination for the AEP Flint Creek Plant Boiler No. 1; SO_2 and PM BART determinations for the natural gas firing scenario for the Entergy Lake Catherine Plant Unit 4; PM BART determinations for both the bituminous and sub-bituminous coal firing scenarios for the Entergy White Bluff Plant Units 1 and 2; and PM BART determination for the Domtar Ashdown Mill Power Boiler No. 1.				

EPA-APPROVED NON-REGULATORY PROVISIONS AND QUASI-REGULATORY MEASURES IN THE ARKANSAS SIP—Continued

Name of SIP provision	Applicable geographic or nonattainment area	State submittal/ effective date	EPA approval date	Explanation
Infrastructure for the 1997 Ozone NAAQS.	Statewide	12/17/07 3/28/08	8/20/12 (77 FR 50033)	Approval for CAA elements 110(a)(2)(A), (B), (E), (F), (G), (H), (K), (L), and (M). Approval for CAA elements 110(a)(2)(C), (D)(i)(II) (interfere with measures in any other state to prevent significant deterioration of air quality), (D)(ii), and (J) for the 1997 ozone NAAQS, except as it relates to Greenhouse Gas (GHG) emissions. The GHG PSD deficiency was addressed on April 2, 2013 (78 FR 19596).
Infrastructure for the 1997 and 2006 $PM_{2.5}$ NAAQS.	Statewide	3/28/08 9/16/09 9/13/2014	3/4/2015 (80 FR 11573).	Approval for CAA elements 110(a)(2)(A), (B), (E), (F), (G), (H), (K), (L), and (M) on 8/20/2012 (77 FR 50033). Approval for PSD elements (C), (D)(i)(II) (interfere with measures in any other state to prevent significant deterioration of air quality) and (J) on March 4, 2015 (80 FR 11573)
Interstate transport for the 1997 ozone NAAQS (Noninterference with measures required to prevent significant deterioration of air quality in any other State).	Statewide	4/5/11	8/20/12 (77 FR 50033)	Approved except as it relates to GHGs. The GHG PSD deficiency was addressed on April 2, 2013 (78 FR 19596).
Interstate transport for the 1997 and 2006 $PM_{2.5}$ NAAQS (contribute to nonattainment or interfere with maintenance).	Statewide	12/17/2007 9/16/2009	8/29/2013 (78 FR 53269).	
Crittenden County Base Year Emission Inventory for the 2008 Ozone Standard.	Crittenden County ...	8/28/2015	1/13/2016 (81 FR 1884).	
2008 8-hour ozone Redesignation Request, Maintenance Plan, and Clarification Letter for the Crittenden County portion of Memphis, TN-AR-MS Nonattainment Area.	Crittenden County portion of Memphis, TN-AR-MS Nonattainment Area.	12/10/2015	4/25/2016 (81 FR 24030).	

EPA-APPROVED NON-REGULATORY PROVISIONS AND QUASI-REGULATORY MEASURES IN THE ARKANSAS SIP—Continued

Name of SIP provision	Applicable geographic or nonattainment area	State submittal/effective date	EPA approval date	Explanation
Arkansas Regional Haze NO_X SIP Revision.	Statewide	10/31/2017	2/12/2018 (83 FR 5927).	Regional Haze SIP submittal addressing NO_X BART requirements for Arkansas EGUs and reasonable progress requirements for NO_X for the first implementation period.
Infrastructure for the 2006 $PM_{2.5}$ NAAQS	Statewide	3/24/2017	2/14/2018, 83 FR 6470	Approval for 110(a)(2)(D)(ii).
Infrastructure for the 2008 Pb NAAQS	Statewide	3/24/2017	2/14/2018, 83 FR 6470	Approval for 110(a)(2)(A), (B), (C), (D), (E), (F), (G), (H), (J), (K), (L) and (M).
Infrastructure for the 2008 O_3 NAAQS	Statewide	3/24/2017	2/14/2018, 83 FR 6470	Approval for 110(a)(2)(A), (B), (C), (D)(i) (portions pertaining and PSD), (D)(ii), (E), (F), (G), (H), (J), (K), (L) and (M).
Infrastructure for the 2010 NO_2 NAAQS	Statewide	3/24/2017	2/14/2018, 83 FR 6470	Approval for 110(a)(2)(A), (B), (C), (D)(i)(portion pertaining to nonattainment interference with maintenance and PSD), (D)(ii), (E), (F), (G), (H), (J), (K), (L) and (M).
Infrastructure for the 2010 SO_2 NAAQS	Statewide	3/24/2017	2/14/2018, 83 FR 6470	Approval for 110(a)(2)(A), (B), (C), (D)(i)(portion pertaining to PSD), (D)(ii), (E), (F), (G), (H), (J), (K), (L) and (M).
Infrastructure for the 2012 $PM_{2.5}$ NAAQS	Statewide	3/24/2017	2/14/2018, 83 FR 6470	Approval for 110(a)(2)(A), (B), (C), (D)(i) (portion pertaining to PSD), (D)(ii), (E), (F), (G), (H), (J), (K), (L) and (M).

[63 FR 56927, Oct. 23, 1998, as amended at 65 FR 61107, Oct. 16, 2000; 66 FR 51316, Oct. 9, 2001; 71 FR 13545, Mar. 16, 2006; 72 FR 18396, Apr. 12, 2007; 72 FR 54561, Sept. 26, 2007; 74 FR 2386, Jan. 15, 2009; 75 FR 14080, Mar. 24, 2010; 77 FR 14675, 14676, Mar. 12, 2012; 77 FR 50037, Aug. 20, 2012; 78 FR 19598, Apr. 2, 2013; 78 FR 53270, Aug. 29, 2013; 80 FR 11574, Mar. 4, 2015; 80 FR 24218, Apr. 30, 2015; 80 FR 38627, July 7, 2015; 81 FR 1887, Jan. 14, 2016; 81 FR 24032, Apr. 25, 2016; 82 FR 60520, Dec. 21, 2017; 83 FR 5939, Feb. 12, 2018; 83 FR 6472, Feb. 14, 2018]

EFFECTIVE DATE NOTE: At 83 FR 30570, June 29, 2018, § 52.170(c) was amended in the table titled ''EPA-Approved Regulations in the Arkansas SIP'' by revising entries for Reg. 19.401 and Reg. 19.407; and adding an entry for Reg. 19.417 immediately following the entry for Reg. 19.413, effective July 30, 2018. For the convenience of the user, the added and revised text is set forth as follows:

§ 52.170 Identification of plan.

* * * * *

(c) * * *

EPA-APPROVED REGULATIONS IN THE ARKANSAS SIP

State citation	Title/subject	State submittal/ effective date	EPA approval date	Explanation
Regulation No. 19: Regulations of the Arkansas Plan of Implementation for Air Pollution Control				
*	*	*	*	*
Chapter 4: Minor Source Review				
Reg. 19.401	General Applicability	3/24/2017	6/29/2018, 83 FR 30553.	Includes supplemental information provided on 11/30/2015, 5/26/2016, 7/5/2017, and 3/16/2018.
*	*	*	*	*
Reg. 19.407	Permit Amendments	3/24/2017	6/29/2018, 83 FR 30553.	Includes supplemental information provided on 11/30/2015, 5/26/2016, 7/5/2017, 7/27/2017, and 3/16/2018.
*	*	*	*	*
Reg. 19.417	Registration	7/26/2010	6/29/2018, 83 FR 30553.	Includes supplemental information provided on 11/30/2015, 5/26/2016, 7/5/2017, and 03/16/2018.
*	*	*	*	*

* * * * *

§ 52.171 Classification of regions.

The Arkansas plan was evaluated on the basis of the following classifications:

Air quality control region	Pollutant				
	Particulate matter	Sulfur oxides	Nitrogen dioxide	Carbon monoxide	Ozone
Central Arkansas Intrastate	II	III	III	III	III
Metropolitan Fort Smith Interstate	II	III	III	III	III
Metropolitan Memphis Interstate	I	III	III	III	I
Monroe (Louisiana)-El Dorado (Arkansas) Interstate	II	III	III	III	III
Northeast Arkansas Intrastate	III	III	III	III	III
Northwest Arkansas Intrastate	III	III	III	III	III
Shreveport-Texarkana-Tyler Interstate	II	III	III	III	III

[37 FR 10850, May 31, 1972, as amended at 39 FR 16346, May 8, 1974; 45 FR 6571, Jan. 29, 1980]

§ 52.172 Approval status.

With the exceptions set forth in this subpart, the Administrator approves Arkansas's state implementation plan under section 110 of the Clean Air Act. Furthermore, the Administrator finds that the plan satisfies all applicable requirements of Parts C and D, Title I, of the Clean Air Act as amended in 1990, except as noted below.

(a) 1997 $PM_{2.5}$ NAAQS: The SIP submitted March 28, 2008 is disapproved for CAA element 110(a)(2)(D)(ii).

(b) 2006 $PM_{2.5}$ NAAQS: The SIPs submitted March 28, 2008 and September 16, 2009 are disapproved for CAA element 110(a)(2)(D)(ii).

(c) GHGs: The revisions to the Arkansas SIP definition of ''CO_2 Equivalent Emissions'' at Regulation 19, Chapter 2 to implement the GHG Biomass Deferral as submitted on November 6, 2012 are disapproved.

[81 FR 32241, May 23, 2016]

§ 52.173 Visibility protection.

(a) *Regional haze*. The regional haze State Implementation Plan (SIP) revisions submitted on September 23, 2008 and August 3, 2010, and supplemented on September 27, 2011 are partially approved and partially disapproved.

(1) The identification of sources that are eligible for Best Available Retrofit Technology (BART) is approved, with the exception of the 6A Boiler at the Georgia-Pacific Crossett Mill, which is BART eligible.

(2) The identification of sources subject to BART is approved, with the exception of the 6A and 9A Boilers at the Georgia-Pacific Crossett Mill, which are both subject to BART.

(3) The following BART determinations are disapproved:

(i) The sulfur dioxide (SO_2), nitrogen dioxide (NO_X), and particulate matter (PM) BART determinations for the Arkansas Electric Cooperative Corporation Bailey Plant Unit 1 and the AECC McClellan Plant Unit 1;

(ii) The SO_2 and NO_X BART determinations for the American Electric Power Flint Creek Plant Boiler No. 1;

(iii) The NO_X BART determination for the natural gas firing scenario and the SO_2, NO_X, and PM BART determinations for the fuel oil firing scenario for the Entergy Lake Catherine Plant Unit 4;

(iv) The SO_2 and NO_X BART determinations for both the bituminous and sub-bituminous coal firing scenarios for the Entergy White Bluff Plant Units 1 and 2;

(v) The BART determination for the Entergy White Bluff Plant Auxiliary Boiler;

(vi) The SO_2 and NO_X BART determinations for the Domtar Ashdown Mill Power Boiler No. 1; and

(vii) The SO_2, NO_X and PM BART determinations for the Domtar Ashdown Mill Power Boiler No. 2.

(4) The Arkansas Regional Haze Rule, (APCEC Regulation 19, Chapter 15), is partially approved and partially disapproved such that:

(i) The requirement under Reg. 19.104(B) for BART installation and operation as expeditiously as practicable, but no later than 5 years after EPA approval of the Arkansas Regional Haze State Implementation Plan is partially approved and partially disapproved, such that the partial approval is for the BART determinations we are approving and the partial disapproval is for the BART determinations we are disapproving;

(ii) The requirement under Reg. 19.1504(B) for BART installation and operation no later than 6 years after the effective date of the State regulation is disapproved;

(iii) Reg. 19.1505 (A)(1) and (2), (B), (C), (D)(1) and (2), (E), (F)(1) and (2), (G)(1) and (2), (H), (I)(1) and (2), (J)(1) and (2), (K), (L), (M)(1), and (N) are disapproved;

(iv) the Reg. 19.1506 requirement to demonstrate compliance with the BART limits listed in Reg. 19.1505 (A)(1) and (2), (B), (C), (D)(1) and (2), (E), (F)(1) and (2), (G)(1) and (2), (H), (I)(1) and (2), (J)(1) and (2), (K), (L), (M)(1), and (N) is disapproved; and

(v) The remaining portions are approved.

(5) The regional haze long term strategy under 40 CFR 51.308(d)(3) is partially approved and partially disapproved.

(6) The reasonable progress goals are disapproved.

(b) *Interstate Transport*. The portion of the SIP pertaining to adequate provisions to prohibit emissions from interfering with measures required in another state to protect visibility, submitted on March 28, 2008, and supplemented on September 27, 2011, is partially approved and partially disapproved.

(1) The Arkansas Regional Haze Rule, (APCEC Regulation 19, Chapter 15), is partially approved and partially disapproved such that:

(i) The requirement under Reg. 19.104(B) for BART installation and operation as expeditiously as practicable, but no later than 5 years after EPA approval of the Arkansas Regional Haze State Implementation Plan is partially approved and partially disapproved, such that the partial approval is for the BART determinations we are approving and the partial disapproval is for the BART determinations we are disapproving;

(ii) The requirement under Reg. 19.1504(B) for BART installation and operation no later than 6 years after the effective date of the State regulation is disapproved;

(iii) Reg. 19.1505 (A)(1) and (2), (B), (C), (D)(1) and (2), (E), (F)(1) and (2), (G)(1) and (2), (H), (I)(1) and (2), (J)(1) and (2), (K), (L), (M)(1), and (N) are disapproved;

(iv) The Reg. 19.1506 requirement to demonstrate compliance with the BART limits listed in Reg. 19.1505 (A)(1) and (2), (B), (C), (D)(1) and (2), (E), (F)(1) and (2), (G)(1) and (2), (H), (I)(1) and (2), (J)(1) and (2), (K), (L), (M)(1), and (N) is disapproved; and

(v) The remaining portions are approved.

(c) *Federal implementation plan for regional haze.* Requirements for AECC Carl E. Bailey Unit 1; AECC John L. McClellan Unit 1; AEP Flint Creek Unit 1; Entergy White Bluff Units 1, 2, and Auxiliary Boiler; Entergy Lake Catherine Unit 4; Domtar Ashdown Paper Mill Power Boilers No. 1 and 2; and Entergy Independence Units 1 and 2 affecting visibility.

(1) *Applicability.* The provisions of this section shall apply to each owner or operator, or successive owners or operators, of the sources designated as: AECC Carl E. Bailey Unit 1; AECC John L. McClellan Unit 1; AEP Flint Creek Unit 1; Entergy White Bluff Units 1, 2, and Auxiliary Boiler; Entergy Lake Catherine Unit 4; Domtar Ashdown Paper Mill Power Boilers No. 1 and 2; and Entergy Independence Units 1 and 2.

(2) *Definitions.* All terms used in this part but not defined herein shall have the meaning given them in the Clean Air Act and in parts 51 and 60 of this title. For the purposes of this section:

24-hour period means the period of time between 12:01 a.m. and 12 midnight.

Air pollution control equipment includes selective catalytic control units, baghouses, particulate or gaseous scrubbers, and any other apparatus utilized to control emissions of regulated air contaminants which would be emitted to the atmosphere.

Boiler-operating-day for electric generating units listed under paragraph (c)(1) of this section means any 24-hour period between 12 midnight and the following midnight during which any fuel is combusted at any time at the steam generating unit, unless otherwise specified. For power boilers listed under paragraph (c)(1) of this section, we define boiler-operating-day as a 24-hr period between 6 a.m. and 6 a.m. the following day during which any fuel is fed into and/or combusted at any time in the power boiler.

Daily average means the arithmetic average of the hourly values measured in a 24-hour period.

Heat input means heat derived from combustion of fuel in a unit and does not include the heat input from preheated combustion air, recirculated flue gases, or exhaust gases from other sources. Heat input shall be calculated in accordance with 40 CFR part 75.

Owner or Operator means any person who owns, leases, operates, controls, or supervises any of the units or power boilers listed under paragraph (c)(1) of this section.

Regional Administrator means the Regional Administrator of EPA Region 6 or his/her authorized representative.

Unit means one of the natural gas, fuel oil, or coal fired boilers covered under paragraph (c) of this section.

(3) *Emissions limitations for AECC Bailey Unit 1 and AECC McClellan Unit 1.* The individual SO_2 and PM emission limits for each unit are as listed in the table in this paragraph (c)(3).

Unit	SO_2 emission limit	PM emission limit
AECC Bailey Unit 1	Use of fuel with a sulfur content limit of 0.5% by weight.	Use of fuel with a sulfur content limit of 0.5% by weight.

Unit	SO_2 emission limit	PM emission limit
AECC McClellan Unit 1	Use of fuel with a sulfur content limit of 0.5% by weight.	Use of fuel with a sulfur content limit of 0.5% by weight.

(4) *Compliance dates for AECC Bailey Unit 1 and AECC McClellan Unit 1.* The owner or operator of each unit must comply with the SO_2 and PM requirements listed in paragraph (c)(3) of this section by October 27, 2021. As of October 27, 2016, the owner or operator of each unit shall not purchase fuel for combustion at the unit that does not meet the sulfur content limit in paragraph (c)(3) of this section. The owner or operator of each unit must comply with the requirement in paragraph (c)(3) of this section to burn only fuel with a sulfur content limit of 0.5% by weight by October 27, 2021.

(5) *Compliance determination and reporting and recordkeeping requirements for AECC Bailey Unit 1 and AECC McClellan Unit 1 for SO_4 and PM.* To determine compliance with the SO_2 and PM requirements listed in paragraph (c)(3) of this section, the owner or operator shall sample and analyze each shipment of fuel to determine the sulfur content by weight, except for natural gas shipments. A ''shipment'' is considered delivery of the entire amount of each order of fuel purchased. Fuel sampling and analysis may be performed by the owner or operator of an affected unit, an outside laboratory, or a fuel supplier. All records pertaining to the sampling of each shipment of fuel as described in this paragraph (c)(5), including the results of the sulfur content analysis, must be maintained by the owner or operator and made available upon request to EPA and ADEQ representatives.

(6) *Emissions limitations for AEP Flint Creek Unit 1 and Entergy White Bluff Units 1 and 2.* The individual SO_2 emission limits for each unit are as listed in the table in this paragraph (c)(6), as specified in pounds per million British thermal units (lb/MMBtu). The SO_2 emission limits of 0.06 lb/MMBtu are on a rolling 30 boiler-operating-day averaging period.

Unit	SO_2 emission limit (lb/MMBtu)
AEP Flint Creek Unit 1	0.06
Entergy White Bluff Unit 1	0.06
Entergy White Bluff Unit 2	0.06

(7) *Compliance dates for AEP Flint Creek Unit 1 and Entergy White Bluff Units 1 and 2.* The owner or operator of AEP Flint Creek Unit 1 must comply with the SO_2 emission limit listed in paragraph (c)(6) of this section by April 27, 2018. The owner or operator of White Bluff Units 1 and 2 must comply with the SO_2 emission limit listed in paragraph (c)(6) of this section by October 27, 2021.

(8) *Compliance determination and reporting and recordkeeping requirements for AEP Flint Creek Unit 1 and Entergy White Bluff Units 1 and 2.* (i) For purposes of determining compliance with the SO_2 emission limit listed in paragraph (c)(6) of this section for AEP Flint Creek Unit 1 and with the SO_2 emission limits listed in paragraph (c)(6) of this section for White Bluff Units 1 and 2, the emissions for each boiler-operating-day for each unit shall be determined by summing the hourly emissions measured in pounds of SO_2. For each unit, heat input for each boiler-operating-day shall be determined by adding together all hourly heat inputs, in millions of BTU. Each boiler-operating-day of the 30-day rolling average for a unit shall be determined by adding together the pounds of SO_2 from that day and the preceding 29 boiler-operating-days and dividing the total pounds of SO_2 by the sum of the heat input during the same 30 boiler-operating-day period. The result shall be the 30 boiler-operating-day rolling average in terms of lb/MMBtu emissions of SO_2. If a valid SO_2 pounds per hour or heat input is not available for any hour for a unit, that heat input and SO_2 pounds per hour shall not be used in the calculation of the 30 boiler-operating-day rolling average for SO_2. For each day, records of the total SO_2 emitted that day by each emission unit and

the sum of the hourly heat inputs for that day must be maintained by the owner or operator and made available upon request to EPA and ADEQ representatives. Records of the 30 boiler-operating-day rolling average for SO_2 for each unit as described in this paragraph (c)(8)(i) must be maintained by the owner or operator for each boiler-operating-day and made available upon request to EPA and ADEQ representatives.

(ii) The owner or operator shall continue to maintain and operate a CEMS for SO_2 on the units listed in paragraph (c)(6) of this section in accordance with 40 CFR 60.8 and 60.13(e), (f), and (h), and appendix B of 40 CFR part 60. The owner or operator shall comply with the quality assurance procedures for CEMS found in 40 CFR part 75. Compliance with the emission limits for SO_2 shall be determined by using data from a CEMS.

(iii) Continuous emissions monitoring shall apply during all periods of operation of the units listed in paragraph (c)(6) of this section, including periods of startup, shutdown, and malfunction, except for CEMS breakdowns, repairs, calibration checks, and zero and span adjustments. Continuous monitoring systems for measuring SO_2 and diluent gas shall complete a minimum of one cycle of operation (sampling, analyzing, and data recording) for each successive 15-minute period. Hourly averages shall be computed using at least one data point in each fifteen-minute quadrant of an hour. Notwithstanding this requirement, an hourly average may be computed from at least two data points separated by a minimum of 15 minutes (where the unit operates for more than one quadrant in an hour) if data are unavailable as a result of performance of calibration, quality assurance, preventive maintenance activities, or backups of data from data acquisition and handling system, and recertification events. When valid SO_2 pounds per hour emission data are not obtained because of continuous monitoring system breakdowns, repairs, calibration checks, or zero and span adjustments, emission data must be obtained by using other monitoring systems approved by the EPA to provide emission data for a minimum of 18 hours in each 24-hour period and at least 22 out of 30 successive boiler operating days.

(9) *Emissions limitations for Entergy White Bluff Auxiliary Boiler*. The individual SO_2 and PM emission limits for the unit are as listed in the table in this paragraph (c)(9) in pounds per hour (lb/hr).

Unit	SO_2 emission limit (lb/hr)	PM emission limit (lb/hr)
Entergy White Bluff Auxiliary Boiler	105.2	4.5

(10) *Compliance dates for Entergy White Bluff Auxiliary Boiler*. The owner or operator of the unit must comply with the SO_2 and PM emission limits listed in paragraph (c)(9) of this section by October 27, 2016.

(11) *Compliance determination and reporting and recordkeeping requirements for Entergy White Bluff Auxiliary Boiler*. For purposes of demonstrating compliance with the emission limits listed in paragraph (c)(9) of this section, records of fuel oil analysis must be maintained by the owner or operator and made available upon request to EPA and ADEQ representatives.

(12) *Emissions limitations for Entergy Lake Catherine Unit 4*. The unit must not burn fuel oil until BART determinations are promulgated for the unit for SO_2 and PM for the fuel oil firing scenario through a FIP and/or through EPA action upon and approval of revised BART determinations submitted by the State as a SIP revision.

(13) *Emissions Limitations for Domtar Ashdown Paper Mill Power Boiler No. 1*. The SO_2 emission limit for the boiler is as listed in the following table in pounds per day (lb/day) as averaged over a rolling 30 boiler-operating-day period. The NO_X emission limit for the boiler is as listed in the following table in pounds per hour (lb/hr).

Unit	SO_2 Emission limit (lb/day)	NO_X Emission limit (lb/hr)
Domtar Ashdown Paper Mill Power Boiler No. 1 ..	504	207.4

(14) *Compliance dates for Domtar Ashdown Mill Power Boiler No. 1.* The owner or operator of the boiler must comply with the SO_2 and NO_X emission limits listed in paragraph (c)(13) of this section by November 28, 2016.

(15) *Compliance determination and reporting and recordkeeping requirements for Domtar Ashdown Paper Mill Power Boiler No. 1.* (i)(A) SO_2 emissions resulting from combustion of fuel oil shall be determined by assuming that the SO_2 content of the fuel delivered to the fuel inlet of the combustion chamber is equal to the SO_2 being emitted at the stack. The owner or operator must maintain records of the sulfur content by weight of each fuel oil shipment, where a ''shipment'' is considered delivery of the entire amount of each order of fuel purchased. Fuel sampling and analysis may be performed by the owner or operator, an outside laboratory, or a fuel supplier. All records pertaining to the sampling of each shipment of fuel oil, including the results of the sulfur content analysis, must be maintained by the owner or operator and made available upon request to EPA and ADEQ representatives. SO_2 emissions resulting from combustion of bark shall be determined by using the following site-specific curve equation, which accounts for the SO_2 scrubbing capabilities of bark combustion:

$$Y = 0.4005 * X - 0.2645$$

Where:

Y = pounds of sulfur emitted per ton of dry fuel feed to the boiler.

X = pounds of sulfur input per ton of dry bark.

(B) The owner or operator must confirm the site-specific curve equation through stack testing. By October 27, 2017, the owner or operator must provide a report to EPA showing confirmation of the site-specific curve equation accuracy. Records of the quantity of fuel input to the boiler for each fuel type for each day must be compiled no later than 15 days after the end of the month and must be maintained by the owner or operator and made available upon request to EPA and ADEQ representatives. Each boiler-operating-day of the 30-day rolling average for the boiler must be determined by adding together the pounds of SO_2 from that boiler-operating-day and the preceding 29 boiler-operating-days and dividing the total pounds of SO_2 by the sum of the total number of boiler operating days (*i.e.*, 30). The result shall be the 30 boiler-operating-day rolling average in terms of lb/day emissions of SO_2. Records of the total SO_2 emitted for each day must be compiled no later than 15 days after the end of the month and must be maintained by the owner or operator and made available upon request to EPA and ADEQ representatives. Records of the 30 boiler-operating-day rolling averages for SO_2 as described in this paragraph (c)(15)(i) must be maintained by the owner or operator for each boiler-operating-day and made available upon request to EPA and ADEQ representatives.

(ii) If the air permit is revised such that Power Boiler No. 1 is permitted to burn only pipeline quality natural gas, this is sufficient to demonstrate that the boiler is complying with the SO_2 emission limit under paragraph (c)(13) of this section. The compliance determination requirements and the reporting and recordkeeping requirements under paragraph (c)(15)(i) of this section would not apply and confirmation of the accuracy of the site-specific curve equation under paragraph (c)(15)(i)(B) of this section through stack testing would not be required so long as Power Boiler No. 1 is only permitted to burn pipeline quality natural gas.

(iii) To demonstrate compliance with the NO_X emission limit under paragraph (c)(13) of this section, the owner or operator shall conduct stack testing using EPA Reference Method 7E, found at 40 CFR part 60, appendix A, once every 5 years, beginning October 27, 2017. Records and reports pertaining to the stack testing must be maintained by the owner or operator and made available upon request to EPA and ADEQ representatives.

(iv) If the air permit is revised such that Power Boiler No. 1 is permitted to burn only pipeline quality natural gas,

the owner or operator may demonstrate compliance with the NO_X emission limit under paragraph (c)(13) of this section by calculating NO_X emissions using fuel usage records and the applicable NO_X emission factor under AP–42, Compilation of Air Pollutant Emission Factors, section 1.4, Table 1.4–1. Records of the quantity of natural gas input to the boiler for each day must be compiled no later than 15 days after the end of the month and must be maintained by the owner or operator and made available upon request to EPA and ADEQ representatives. Records of the calculation of NO_X emissions for each day must be compiled no later than 15 days after the end of the month and must be maintained by the owner or operator and made available upon request to EPA and ADEQ representatives. Each boiler-operating-day of the 30-day rolling average for the boiler must be determined by adding together the pounds of NO_X from that day and the preceding 29 boiler-operating-days and dividing the total pounds of NO_X by the sum of the total number of hours during the same 30 boiler-operating-day period. The result shall be the 30 boiler-operating-day rolling average in terms of lb/hr emissions of NO_X. Records of the 30 boiler-operating-day rolling average for NO_X must be maintained by the owner or operator for each boiler-operating-day and made available upon request to EPA and ADEQ representatives. Under these circumstances, the compliance determination requirements and the reporting and recordkeeping requirements under paragraph (c)(15)(iii) of this section would not apply.

(16) *SO_2 and NO_X Emissions Limitations for Domtar Ashdown Paper Mill Power Boiler No.2.* The individual SO_2 and NO_X emission limits for the boiler are as listed in the following table in pounds per hour (lb/hr) as averaged over a rolling 30 boiler-operating-day period.

Unit	SO_2 Emission Limit (lb/hr)	NO_X Emission Limit (lb/hr)
Domtar Ashdown Paper Mill Power Boiler No. 2 ..	91.5	345

(17) *SO_2 and NO_X Compliance dates for Domtar Ashdown Mill Power Boiler No. 2.* The owner or operator of the boiler must comply with the SO_2 and NO_X emission limits listed in paragraph (c)(16) of this section by October 27, 2021.

(18) *SO_2 and NO_X Compliance determination and reporting and recordkeeping requirements for Domtar Ashdown Mill Power Boiler No. 2.* (i) NO_X and SO_2 emissions for each day shall be determined by summing the hourly emissions measured in pounds of NO_X or pounds of SO_2. Each boiler-operating-day of the 30-day rolling average for the boiler shall be determined by adding together the pounds of NO_X or SO_2 from that day and the preceding 29 boiler-operating-days and dividing the total pounds of NO_X or SO_2 by the sum of the total number of hours during the same 30 boiler-operating-day period. The result shall be the 30 boiler-operating-day rolling average in terms of lb/hr emissions of NO_X or SO_2. If a valid NO_X pounds per hour or SO_2 pounds per hour is not available for any hour for the boiler, that NO_X pounds per hour shall not be used in the calculation of the 30 boiler-operating-day rolling average for NO_X. For each day, records of the total SO_2 and NO_X emitted for that day by the boiler must be maintained by the owner or operator and made available upon request to EPA and ADEQ representatives. Records of the 30 boiler-operating-day rolling average for SO_2 and NO_X for the boiler as described in this paragraph (c)(18)(i) must be maintained by the owner or operator for each boiler-operating-day and made available upon request to EPA and ADEQ representatives.

(ii) The owner or operator shall continue to maintain and operate a CEMS for SO_2 and NO_X on the boiler listed in paragraph (c)(16) of this section in accordance with 40 CFR 60.8 and 60.13(e), (f), and (h), and appendix B of 40 CFR part 60. The owner or operator shall comply with the quality assurance procedures for CEMS found in 40 CFR part 60. Compliance with the emission limits for SO_2 and NO_X shall be determined by using data from a CEMS.

(iii) Continuous emissions monitoring shall apply during all periods of operation of the boiler listed in paragraph (c)(16) of this section, including

periods of startup, shutdown, and malfunction, except for CEMS breakdowns, repairs, calibration checks, and zero and span adjustments. Continuous monitoring systems for measuring SO_2 and NO_X and diluent gas shall complete a minimum of one cycle of operation (sampling, analyzing, and data recording) for each successive 15-minute period. Hourly averages shall be computed using at least one data point in each fifteen-minute quadrant of an hour. Notwithstanding this requirement, an hourly average may be computed from at least two data points separated by a minimum of 15 minutes (where the unit operates for more than one quadrant in an hour) if data are unavailable as a result of performance of calibration, quality assurance, preventive maintenance activities, or backups of data from data acquisition and handling system, and recertification events. When valid SO_2 or NO_X pounds per hour emission data are not obtained because of continuous monitoring system breakdowns, repairs, calibration checks, or zero and span adjustments, emission data must be obtained by using other monitoring systems approved by the EPA to provide emission data for a minimum of 18 hours in each 24-hour period and at least 22 out of 30 successive boiler operating days.

(iv) If the air permit is revised such that Power Boiler No. 2 is permitted to burn only pipeline quality natural gas, this is sufficient to demonstrate that the boiler is complying with the SO_2 emission limit under paragraph (c)(16) of this section. Under these circumstances, the compliance determination requirements under paragraphs (c)(18)(i) through (iii) of this section would not apply to the SO_2 emission limit listed in paragraph (c)(16) of this section.

(v) If the air permit is revised such that Power Boiler No. 2 is permitted to burn only pipeline quality natural gas and the operation of the CEMS is not required under other applicable requirements, the owner or operator may demonstrate compliance with the NO_X emission limit under paragraph (c)(16) of this section by calculating NO_X emissions using fuel usage records and the applicable NO_X emission factor under AP–42, Compilation of Air Pollutant Emission Factors, section 1.4, Table 1.4–1. Records of the quantity of natural gas input to the boiler for each day must be compiled no later than 15 days after the end of the month and must be maintained by the owner or operator and made available upon request to EPA and ADEQ representatives. Records of the calculation of NO_X emissions for each day must be compiled no later than 15 days after the end of the month and must be maintained and made available upon request to EPA and ADEQ representatives. Each boiler-operating-day of the 30-day rolling average for the boiler must be determined by adding together the pounds of NO_X from that day and the preceding 29 boiler-operating-days and dividing the total pounds of NO_X by the sum of the total number of hours during the same 30 boiler-operating-day period. The result shall be the 30 boiler-operating-day rolling average in terms of lb/hr emissions of NO_X. Records of the 30 boiler-operating-day rolling average for NO_X must be maintained by the owner or operator for each boiler-operating-day and made available upon request to EPA and ADEQ representatives. Under these circumstances, the compliance determination requirements under paragraphs (c)(18)(i) through (iii) of this section would not apply to the NO_X emission limit.

(19) *PM BART Requirements for Domtar Ashdown Paper Mill Power Boiler No.2.* The owner or operator must rely on the applicable PM standard required under 40 CFR part 63, subpart DDDDD—National Emission Standards for Hazardous Air Pollutants for Major Sources: Industrial, Commercial, and Institutional Boilers and Process Heaters, as revised, to satisfy the PM BART requirement. Compliance with the applicable PM standard under 40 CFR part 63 subpart DDDDD, as revised, shall demonstrate compliance with the PM BART requirement.

(20) *PM compliance dates for Domtar Ashdown Mill Power Boiler No. 2.* The owner or operator of the boiler must comply with the PM BART requirement listed in paragraph (c)(19) of this section by November 28, 2016.

(21) Alternative *PM Compliance Determination for Domtar Ashdown Paper Mill Power Boiler No.2*. If the air permit is revised such that Power Boiler No. 2 is permitted to burn only pipeline quality natural gas, this is sufficient to demonstrate that the boiler is complying with the PM BART requirement under paragraph (c)(19) of this section.

(22) *Emissions limitations for Entergy Independence Units 1 and 2*. The individual emission limits for each unit are as listed in the table in this paragraph (c)(22) in pounds per million British thermal units (lb/MMBtu). The SO_2 emission limits listed in the table as lb/MMBtu are on a rolling 30 boiler-operating-day averaging period.

Unit	SO_2 Emission limit (lb/MMBtu)
Entergy Independence Unit 1	0.06
Entergy Independence Unit 2	0.06

(23) *Compliance dates for Entergy Independence Units 1 and 2*. The owner or operator of each unit must comply with the SO_2 emission limits in paragraph (c)(22) of this section by October 27, 2021.

(24) *Compliance determination and reporting and recordkeeping requirements for Entergy Independence Units 1 and 2*. (i) For purposes of determining compliance with the SO_2 emissions limit listed in paragraph (c)(22) of this section for each unit, the SO_2 emissions for each boiler-operating-day shall be determined by summing the hourly emissions measured in pounds of SO_2. For each unit, heat input for each boiler-operating-day shall be determined by adding together all hourly heat inputs, in millions of BTU. Each boiler-operating-day of the thirty-day rolling average for a unit shall be determined by adding together the pounds of SO_2 from that day and the preceding 29 boiler-operating-days and dividing the total pounds of SO_2 by the sum of the heat input during the same 30 boiler-operating-day period. The result shall be the 30 boiler-operating-day rolling average in terms of lb/MMBtu emissions of SO_2. If a valid SO_2 pounds per hour or heat input is not available for any hour for a unit, that heat input and SO_2 pounds per hour shall not be used in the calculation of the applicable 30 boiler-operating-days rolling average. For each day, records of the total SO_2 emitted that day by each emission unit and the sum of the hourly heat inputs for that day must be maintained by the owner or operator and made available upon request to EPA and ADEQ representatives. Records of the 30 boiler-operating-day rolling average for each unit as described in this paragraph (c)(24)(i) must be maintained by the owner or operator for each boiler-operating-day and made available upon request to EPA and ADEQ representatives.

(ii) The owner or operator shall continue to maintain and operate a CEMS for SO_2 on the units listed in paragraph (c)(22) in accordance with 40 CFR 60.8 and 60.13(e), (f), and (h), and appendix B of 40 CFR part 60. The owner or operator shall comply with the quality assurance procedures for CEMS found in 40 CFR part 75. Compliance with the emission limits for SO_2 shall be determined by using data from a CEMS.

(iii) Continuous emissions monitoring shall apply during all periods of operation of the units listed in paragraph (c)(22) of this section, including periods of startup, shutdown, and malfunction, except for CEMS breakdowns, repairs, calibration checks, and zero and span adjustments. Continuous monitoring systems for measuring SO_2 and diluent gas shall complete a minimum of one cycle of operation (sampling, analyzing, and data recording) for each successive 15-minute period. Hourly averages shall be computed using at least one data point in each fifteen-minute quadrant of an hour. Notwithstanding this requirement, an hourly average may be computed from at least two data points separated by a minimum of 15 minutes (where the unit operates for more than one quadrant in an hour) if data are unavailable as a result of performance of calibration, quality assurance, preventive maintenance activities, or backups of data from data acquisition and handling system, and recertification events. When valid SO_2 pounds per hour emission data are not obtained because of continuous monitoring system breakdowns, repairs, calibration checks, or zero and span adjustments, emission

data must be obtained by using other monitoring systems approved by the EPA to provide emission data for a minimum of 18 hours in each 24-hour period and at least 22 out of 30 successive boiler operating days.

(25) *Reporting and recordkeeping requirements.* Unless otherwise stated all requests, reports, submittals, notifications, and other communications to the Regional Administrator required under paragraph (c) of this section shall be submitted, unless instructed otherwise, to the Director, Multimedia Planning and Permitting Division, U.S. Environmental Protection Agency, Region 6, to the attention of Mail Code: 6PD, at 1445 Ross Avenue, Suite 1200, Dallas, Texas 75202–2733. For each unit subject to the emissions limitation under paragraph (c) of this section, the owner or operator shall comply with the following requirements, unless otherwise specified:

(i) For each emissions limit under paragraph (c) of this section where compliance shall be determined by using data from a CEMS, comply with the notification, reporting, and recordkeeping requirements for CEMS compliance monitoring in 40 CFR 60.7(c) and (d).

(ii) [Reserved]

(26) *Equipment operations.* At all times, including periods of startup, shutdown, and malfunction, the owner or operator shall, to the extent practicable, maintain and operate the unit including associated air pollution control equipment in a manner consistent with good air pollution control practices for minimizing emissions. Determination of whether acceptable operating and maintenance procedures are being used will be based on information available to the Regional Administrator which may include, but is not limited to, monitoring results, review of operating and maintenance procedures, and inspection of the unit.

(27) *Enforcement.* (i) Notwithstanding any other provision in this implementation plan, any credible evidence or information relevant as to whether the unit would have been in compliance with applicable requirements if the appropriate performance or compliance test had been performed, can be used to establish whether or not the owner or operator has violated or is in violation of any standard or applicable emission limit in the plan.

(ii) Emissions in excess of the level of the applicable emission limit or requirement that occur due to a malfunction shall constitute a violation of the applicable emission limit.

(d) *Measures Addressing Partial Disapproval of Portion of Interstate Visibility Transport SIP for the 1997 8-hour ozone and $PM_{2.5}$ NAAQS.* The deficiencies identified in EPA's partial disapproval of the portion of the SIP pertaining to adequate provisions to prohibit emissions in Arkansas from interfering with measures required in another state to protect visibility, submitted on March 28, 2008, and supplemented on September 27, 2011 are satisfied by § 52.173.

(e) *Measures addressing best available retrofit technology (BART) for electric generating unit (EGU) emissions of nitrogen oxides (NO_X).* The BART requirements for EGU NO_X emissions are satisfied by § 52.184 and the Arkansas Regional Haze NO_X SIP Revision approved February 12, 2018, 83 FR 5927.

(f) *Other measures addressing reasonable progress.* The reasonable progress requirements for NO_X emissions are satisfied by the Arkansas Regional Haze NO_X SIP Revision approved February 12, 2018.

[77 FR 14676, Mar. 12, 2012, as amended at 81 FR 66415, Sept. 27, 2016; 82 FR 18995, Apr. 25, 2017; 83 FR 5917, 5940, Feb. 12, 2018]

§ 52.174 Control strategy and regulations: Ozone.

(a) The EPA has determined that the Crittenden County Marginal 2008 ozone NAAQS nonattainment area attained the NAAQS by the applicable attainment date of July 20, 2015.

(b) [Reserved]

[81 FR 26708, May 4, 2016]

§§ 52.175–52.180 [Reserved]

§ 52.181 Significant deterioration of air quality.

(a) The plan submitted by the Governor of Arkansas as follows:

(1) April 23, 1981—submittal of the PSD Supplement Arkansas Plan of Implementation for Pollution Control (the ''PSD Supplement'') submitted

April 23, 1981 (as adopted by the Arkansas Commission on Pollution Control and Ecology (ACPCE) on April 10, 1981);

(2) June 3, 1988—submittal of revisions to the PSD Supplement (revised and adopted by the ACPCE on March 25, 1988);

(3) June 19, 1990—submittal of revisions to the PSD Supplement (revised and adopted by the ACPCE on May 25, 1990), and;

(4) March 5, 1999—submittal of Regulation 19, Chapter 9, Prevention of Significant Deterioration which recodified Arkansas' PSD regulations (as adopted by the Arkansas Pollution Control and Ecology Commission on January 22, 1999)

(5) November 6, 2012—submittal of Regulation 19, Chapter 9, Prevention of Significant Deterioration which provided the authority to regulate greenhouse gas emissions in the Arkansas PSD program.

(6) January 7, 2014—submittal of Regulation 19, Chapter 9, Prevention of Significant Deterioration which updated the Arkansas PSD program to provide for the issuance of greenhouse gas plantwide applicability limit permits.

(7) December 1, 2014—submittal of Regulation 19, Chapter 9, Prevention of Significant Deterioration which provided the authority to regulate and permit emissions of $PM_{2.5}$ and its precursors.

(b) The requirements of sections 160 through 165 of the Clean Air Act are not met for federally designated Indian lands. Therefore, the provisions of § 52.21 except paragraph (a)(1) are hereby incorporated and made a part of the applicable implementation plan and are applicable to sources located on land under the control of Indian governing bodies.

[56 FR 20139, May 2, 1991, as amended at 63 FR 17683, Apr. 10, 1998; 63 FR 32981, June 17, 1998; 65 FR 61108, Oct. 16, 2000; 68 FR 11322, Mar. 10, 2003; 68 FR 74488, Dec. 24, 2003; 80 FR 11577, Mar. 4, 2015; 80 FR 38628, July 7, 2015]

§ 52.183 Small business assistance program.

The Governor of Arkansas submitted on November 6, 1992, a plan revision to develop and implement a Small Business Stationary Source Technical and Environmental Compliance Assistance Program (PROGRAM) to meet the requirements of section 507 of the Clean Air Act by November 15, 1994. The plan commits to provide technical and compliance assistance to small businesses, hire an Ombudsman to serve as an independent advocate for small businesses, and establish a Compliance Advisory Panel to advise the program and report to the EPA on the program's effectiveness. On April 23, 1993, the Governor submitted Act 251 of 1993 which establishes the Compliance Advisory Panel for the PROGRAM.

[60 FR 12695, Mar. 8, 1995]

§ 52.184 Interstate pollutant transport provisions; What are the FIP requirements for decreases in emissions of nitrogen oxides?

(a) The owner and operator of each source and each unit located in the State of Arkansas and for which requirements are set forth under the CSAPR NO_X Ozone Season Group 1 Trading Program in subpart BBBBB of part 97 of this chapter must comply with such requirements with regard to emissions occurring in 2015 and 2016.

(b) The owner and operator of each source and each unit located in the State of Arkansas and for which requirements are set forth under the CSAPR NO_X Ozone Season Group 2 Trading Program in subpart EEEEE of part 97 of this chapter must comply with such requirements with regard to emissions occurring in 2017 and each subsequent year. The obligation to comply with such requirements will be eliminated by the promulgation of an approval by the Administrator of a revision to Arkansas' State Implementation Plan (SIP) as correcting the SIP's deficiency that is the basis for the CSAPR Federal Implementation Plan (FIP) under § 52.38(b), except to the extent the Administrator's approval is partial or conditional, provided that because the CSAPR FIP was promulgated as a partial rather than full remedy for an obligation of the State to address interstate air pollution, the SIP revision likewise will constitute a partial rather than full remedy for the State's obligation unless provided otherwise in the Administrator's approval of the SIP revision.

(c) Notwithstanding the provisions of paragraph (b) of this section, if, at the time of the approval of Arkansas' SIP revision described in paragraph (b) of this section, the Administrator has already started recording any allocations of CSAPR NO_X Ozone Season Group 2 allowances under subpart EEEEE of part 97 of this chapter to units in the State for a control period in any year, the provisions of subpart EEEEE of part 97 of this chapter authorizing the Administrator to complete the allocation and recordation of CSAPR NO_X Ozone Season Group 2 allowances to units in the State for each such control period shall continue to apply, unless provided otherwise by such approval of the State's SIP revision.

[81 FR 74594, Oct. 26, 2016]

§ 52.200 Original identification of plan section.

(a) This section identifies the original ''Arkansas Plan for Implementation for Air Pollution Control'' and all revisions submitted by Arkansas that were federally approved prior to July 1, 1998.

(b) The plan was officially submitted on January 28, 1972.

(c) The plan revisions listed below were submitted on the dates specified.

(1) A certification that the public hearings on the plan were held was submitted by the State Department of Pollution Control and Ecology on January 25, 1972. (Non-regulatory)

(2) State Department of Pollution Control and Ecology letter outlining projected emission reductions, ASA forecasts, source surveillance, legal authority and interstate cooperation was submitted on February 24, 1972. (Non-regulatory)

(3) Revision of section 16 of the State air code was submitted by the Department of Pollution Control and Ecology on July 7, 1972.

(4) June 27, 1975, letter from the Governor submitting sections 1 through 10 of the Regulations and Strategy of the Arkansas Plan of Implementation for Air Pollution Control except those portions relating to delegation of authority to enforce Federal requirements.

(5) August 16, 1976, statement issued by Director of the Arkansas Department of Pollution Control and Ecology specifying the test and reference methods for determining compliance with emission limitations.

(6) Administrative changes to the Arkansas Air Quality Surveillance Network were submitted by the Arkansas Department of Pollution Control and Ecology on February 15, 1977, January 10, 1978, and March 27, 1978. (Non-regulatory.)

(7) On April 4, 1979, the Governor submitted the nonattainment area plan for the area designated nonattainment as of March 3, 1978.

(8) On August 14, 1979, the Governor submitted supplemental information clarifying the plan.

(9) Revisions to Arkansas Regulation 4.5(a) for the ''Control of Volatile Organic Compounds'' showing a final compliance date of June 1, 1981, was submitted by the Arkansas Governor on December 10, 1979.

(10) A modification to the definition for lowest achievable emission rate (LAER), consistent with the definition contained in section 171(3) of the Act, was submitted by the Arkansas Governor on December 10, 1979.

(11) On July 11, 1979, the Governor submitted revisions to section 6(a) malfunction or upset and section 7(e) continuous emission monitoring of the Arkansas Regulations.

(12) Revisions to section 3 (i.e., 3.(a), (b), (k), (l), (n), (o), (z), (bb), (dd), (ee), (ff), and (gg)), section 4 (i.e., 4.1(b), 4.2(a), 4.5(a)(1), 4.5(a)(2), 4.6(c), and 4.6(d)), and section 5 (i.e., 5.4 and 5.5) were adopted by the Arkansas Commission on Pollution Control and Ecology on September 26, 1980 and submitted by the Governor on October 10, 1980.

(13) Revisions to section 3 (i.e., 3.(ii) through 3.(nn)), section 4 (i.e., 4.1, 4.5(a)(1), 4.5(a)(2), and 4.6(e)), and section 5 (i.e., 5.6) of the Arkansas Regulations for the Control of Volatile Organic Compounds were adopted by the Arkansas Commission on Pollution Control and Ecology on April 10, 1981 and submitted by the Governor on April 23, 1981.

(14) A variance to Regulation 8 for Weyerhaeuser Gypsum Plant in Nashville, Arkansas was submitted by the Governor on June 29, 1981.

(15) On April 23, 1981, the Governor submitted revisions to the plan to incorporate Federal Prevention of Significant Deterioration (PSD) Regulations 40 CFR 52.21 by reference.

(16) On September 11, 1981, the Governor submitted a revision to section 8 of the Regulations of the Arkansas Plan of Implementation for Air Pollution Control which implements an emission limit for Energy Systems Company of El Dorado, Arkansas.

(17) The Arkansas State Implementation Plan for lead was submitted to EPA on December 10, 1979, by the Governor of Arkansas as adopted by the Arkansas Department of Pollution Control and Ecology on November 16, 1979. A letter of clarification dated January 5, 1982, also was submitted.

(18) Revisions to the plan for intergovernmental consultation, interstate pollution abatement, and composition of the Arkansas Commission on Pollution Control and Ecology were submitted to EPA by the Arkansas Department of Pollution Control and Ecology on January 9, 1980.

(19) Revision to the plan for maintenance of employee pay was submitted to EPA by the Arkansas Department of Pollution Control and Ecology on January 9, 1980.

(20) On April 24, 1980, the Governor submitted final revisions to the ambient monitoring portion of the plan.

(21) On December 10, 1979, the Governor submitted a revision to Section 5.1(a) of the Regulation of the Arkansas Plan of Implementation for Air Pollution Control, which controls VOC emissions. This revision was adopted by the Arkansas Commission on Pollution Control and Ecology on November 16, 1979.

(22) On July 12, 1985, the Governor submitted a revision entitled, ''Protection of Visibility in Mandatory Class I Federal Areas, May 6, 1985.'' This submittal included new source review regulations and visibility monitoring strategy as adopted by the Arkansas Commission on Pollution Control and Ecology on May 24, 1985.

(i) *Incorporation by reference.* (A) New source review regulations include amendments to rules and regulations of the Arkansas Department of Pollution Control and Ecology entitled, ''Prevention of Significant Deterioration Supplement to the Arkansas Plan of Implementation for Air Pollution Control,'' Sections 1 through 6, adopted on May 24, 1985.

(B) Arkansas Department of Pollution Control and Ecology Minute Order No. 85–12, adopted May 24, 1985.

(ii) *Additional material.* (A) Narrative submittal, including introduction, and visibility monitoring strategy.

(23) A revision to the Arkansas Plan of Implementation of Air Pollution Control was submitted by the Governor on November 25, 1985.

(i) *Incorporation by reference.* (A) Act 763 of 1985 (public availability of emission data) approved April 3, 1985. Act 763 of 1985 amends section 82–1937 (Industrial secrets confidential—Revealing a misdemeanor) of the Arkansas Water and Air Pollution Control Act.

(24) A revision to the Arkansas Plan of Implementation for Air Pollution Control was submitted by the Governor on December 16, 1985.

(i) *Incorporation by reference.* (A) Act 817 of 1983 (permit fees) adopted March 25, 1983. Act 817 of 1983 added sections 82–1916 thru 82–1921 to the Arkansas Statutes. (B) Arkansas Department of Pollution Control and Ecology Regulation No. 9 (Regulations for Development and Implementation of a Permit Fee System for Environmental Permits) adopted by the Arkansas Commission on Pollution Control and Ecology on November 16, 1984. Only those portions of Regulation No. 9 related to air permits are incorporated.

(25) Part II of the Visibility Protection Plan was submitted by the Governor on October 9, 1987.

(i) *Incorporation by reference.* (A) Revision entitled ''Arkansas Plan of Implementation for Air Pollution Control—Revision: Protection of Visibility in Mandatory Class I Federal Areas: Part II—Long-Term Strategy, September 29, 1987''. This submittal includes a visibility long-term strategy and general plan provisions as adopted by the Arkansas Commission on Pollution Control and Ecology on September 25, 1987.

(B) Arkansas Department of Pollution Control and Ecology, Minute Order No. 87–24, adopted September 25, 1987.

(ii) *Additional material.* (A) None.

(26) A revision to the Arkansas Plan of Implementation for Air Pollution Control, as adopted by the Arkansas Commission on Pollution Control and Ecology on May 22, 1987, was submitted by the Governor of Arkansas on July 1, 1987. This revision adds the definitions and dispersion technique regulations required to implement the Federal stack height regulations.

(i) *Incorporation by reference.* (A) Sections 3(r), 3(s), 3(t), 3(u), 3(v), 3(w), 3(x), 3(y), 5(f), and 5(g) of the Arkansas Plan of Implementation for Air Pollution Control as adopted by the Arkansas Commission on Pollution Control and Ecology on May 22, 1987.

(ii) *Additional material.* None.

(27) Revisions to the Arkansas State Implementation Plan for (1) the National Ambient Air Quality Standards and particulate matter definitions (subsections (z) through (ff) of ''Section 3. Definitions''). (2) Prevention of Significant Deterioration of Air Quality and its Supplement, and (3) subsection f(ix) of ''Section 4. Permits'', as adopted on March 25, 1988, by the Arkansas Commission on Pollution Control and Ecology, were submitted by the Governor on June 3, 1988.

(i) *Incorporation by reference.* (A) Regulations of the Arkansas Plan of Implementation for Air Pollution Control ''Section 3. Definitions'', subsections (z) through (ff), as promulgated on March 25, 1988.

(B) Prevention of Significant Deterioration Supplement Arkansas Plan of Implementation For Air Pollution Control, as amended on March 25, 1988.

(C) Regulations of the Arkansas Plan for Implementation for Air Pollution Control ''Section 4. Permits'', subsection f(ix), as promulgated on March 25, 1988.

(ii) *Other material.* None.

(28) Revisions to the Arkansas State Implementation Plan for Prevention of Significant Deterioration (PSD) of Air Quality Supplement Arkansas Plan of Implementation for Air Pollution Control (PSD nitrogen dioxide increments), as adopted on May 25, 1990, by the Arkansas Commission on Pollution Control and Ecology, were submitted by the Governor on June 19, 1990.

(i) *Incorporation by reference.* (A) Prevention of Significant Deterioration Supplement Arkansas Plan of Implementation For Air Pollution Control as amended on May 25, 1990.

(ii) *Additional material.* None.

(29)–(30) [Reserved]

(31) The State is required to implement a Small Business Stationary Source Technical and Environmental Compliance Assistance Program (PROGRAM) as specified in the plan revision submitted by the Governor on November 6, 1992. This plan submittal, as adopted by the Arkansas Commission on Pollution Control and Ecology on November 5, 1992, was developed in accordance with section 507 of the Clean Air Act. On April 23, 1993, the Governor submitted Act 251 of 1993 which establishes the Compliance Advisory Panel (CAP) for the PROGRAM.

(i) *Incorporation by reference.* (A) Act 251 of 1993 approved by the Governor on February 26, 1993. Included in this Act are provisions creating a CAP, establishing membership of the CAP, and addressing the responsibilities and duties of the CAP.

(B) Arkansas Department of Pollution Control and Ecology, Minute Order No. 92–81, adopted November 5, 1992.

(ii) *Additional material.* (A) Revision entitled, ''Arkansas Small Business Stationary Source Technical and Environmental Compliance Assistance Program SIP Revision'', adopted November 5, 1992.

(B) Legal opinion letter dated November 5, 1992, from Steve Weaver, Chief Counsel, Arkansas Department of Pollution Control and Ecology, regarding legality of Commission teleconference meeting.

[37 FR 10850, May 31, 1972. Redesignated at 63 FR 56827, Oct. 23, 1998]

EDITORIAL NOTE: For FEDERAL REGISTER citations affecting § 52.200, see the List of CFR Sections Affected, which appears in the Finding Aids section of the printed volume and at *www.fdsys.gov.*

Subpart F—California

§ 52.220 Identification of plan—in part.

This section identifies the local and regional air district rules, local ordinances, source-specific requirements, and nonregulatory materials submitted by the State of California and approved as part of the California state implementation plan. This section also identifies California statutes and state regulations submitted by the State of California and approved as part of the California state implementation plan on or prior to April 1, 2016. New or amended California statutes and state regulations approved after April 1, 2016 are identified in § 52.220a.

(a) Title of plan: ''The State of California Implementation Plan for Achieving and Maintaining the National Ambient Air Quality Standards''.

(b) The plan was officially submitted on February 21, 1972.

(1) Mendocino County APCD.

(i) Previously approved on May 31, 1972 and now deleted without replacement parts XI, XII, and part XIII.

(ii) Previously approved on May 31, 1972 in paragraph (b) of this section and now deleted without replacement, Part X, Paragraph 3.

(2) Placer County APCD.

(i) Previously approved on May 31, 1972 and now deleted without replacement Rule 42 (Mountain Counties Air Basin), Rules 40 and 42 (Lake Tahoe Air Basin).

(ii) Previously approved on May 31, 1972 in paragraph (b) of this section and now deleted without replacement, Rules 40 and 42.

(iii) Previously approved on May 31, 1972 in paragraph (b) of this section and now deleted without replacement for implementation in the Lake Tahoe Air Basin, Rules 2–17, 2–18, 2–19, and 2–20.

(iv) Previously approved on May 31, 1972 in paragraph (b) of this section and now deleted without replacement for implementation in the Mountain Counties Air Basin, Rules 2–17, 2–18, 2–19, 2–20.

(3) Tehama County APCD.

(i) Previously approved on May 31, 1972 and now deleted without replacement Rule 5.1.

(ii) Previously approved on May 31, 1972 and now deleted without replacement Rule 4.13.

(4) San Bernardino County APCD.

(i) Previously approved on May 31, 1972 and now deleted without replacement Regulation VI, Rules 100 to 104, 109, 110, 120, and 130 to 137.

(ii) Previously approved on May 31, 1972 in paragraph (b) of this section and now deleted without replacement, Regulation 3, Rules 40, 42, 43, and 44.

(5) Ventura County Air Pollution Control District.

(i) Previously approved on September 22, 1972 and now deleted without replacement Rule 18.

(6) Lassen County APCD.

(i) Previously approved on May 31, 1972 in paragraph (b) of this section and now deleted without replacement, Rules 1.4, 3.2, 3.3 (Schedules 1–6), 3.4, and 3.5.

(7) Nevada County APCD.

(i) Previously approved on May 31, 1972 in paragraph (b) of this section and now deleted without replacement, Rule 41.

(ii) Previously approved on May 31, 1972 in paragraph (b) of this section and now deleted without replacement, Rules 17, 18, and 19.

(iii) Previously approved on May 31, 1972 in paragraph (b) of this section and now deleted without replacement Rules 11 and 51.

(8) Orange County APCD.

(i) Previously approved on May 31, 1972 in paragraph (b) of this section and now deleted without replacement, Rule 120.

(9) Sierra County APCD.

(i) Previously approved on May 31, 1972 in paragraph (b) of this section and now deleted without replacement, Rules 46 and 50.

(10) Siskiyou County APCD.

(i) Previously approved on May 31, 1972 in paragraph (b) of this section and now deleted without replacement, Rules 3.1, 3.2, and 3.3.

(ii) Previously approved on May 31, 1972 in paragraph (b) of this section and now deleted without replacement, Rules 2.4, 2.6, and 5.1 to 5.18.

(11) Yolo-Solano AQMD.

(i) Previously approved on May 31, 1972 in paragraph (b) of this section and now deleted without replacement, Rules 1.7 and 2.18.

(ii) Previously approved on May 31, 1972 in paragraph (b) of this section and

now deleted without replacement, Rule 2.7.

(12) California Air Resources Board.

(i) Previously approved on May 31, 1972 in paragraph (b) and deleted without replacement, effective September 10, 1980, chapter 7 (''Legal Considerations'') of part I (''State General Plan'') of the plan submitted on February 21, 1972, and all of the statutory provisions and other legal documents contained in appendix II (''State Statutes and other Legal Documents Pertinent to Air Pollution Control in California'') to chapter 7.

(13) El Dorado County Air Pollution Control District.

(i) Previously approved on May 31, 1972 in paragraph (b) of this section and now deleted without replacement, Rules 77, 78, 79, and 80.

(14) Imperial County Air Pollution Control District.

(i) Previously approved on May 31, 1972 in paragraph (b) of this section and now deleted without replacement, Rule 110.

(ii) Previously approved on May 31, 1972 in paragraph (b)(14) of this section and now deleted with replacement in paragraph (c)(351)(i)(A)(*4*) of this section, Rule 103.

(15) Butte County Air Quality Management District.

(i) Previously approved on May 31, 1972 in paragraph (b) of this section and now deleted with replacement paragraphs (c)(457)(i)(C)(*2*) and (*3*), respectively: Rule 405 ''Permit Conditions'' and Rule 04–04 ''Exemptions from Permit Requirements.''

(c) The plan revisions listed below were submitted on the dates specified.

(1) Air quality data submitted on April 10, 1972, by the Air Resources Board.

(2) Report on status of regulations submitted on April 19, 1972, by the Air Resources Board.

(3) Emission inventory submitted on April 21, 1972, by the Air Resources Board.

(4) Air quality data submitted on April 26, 1972, by the Air Resources Board.

(5) Air quality data submitted on May 5, 1972, by the Air Resources Board.

(6) Revised regulations for all APCD's submitted on June 30, 1972, by the Governor, except for:

(i) San Diego County Air Pollution Control District.

(A) Rule 65 is now removed without replacement as of March 14, 1989.

(B) Previously approved on September 22, 1972 and now deleted without replacement Rules 44, 75, 77 to 80, 82 to 84, and 86 to 91.

(C) Previously approved on September 22, 1972 and now deleted without replacement, Rules 12 and 13.

(D) Previously approved on September 22, 1972 in paragraph (c)(6) of this section and now deleted without replacement, Rules 18, 22, 23, and 24.

(ii) Calaveras County APCD.

(A) Previously approved on September 22, 1972 and now deleted without replacement Rule 305.

(B) Previously approved on September 22, 1972 in paragraph (c) of this section and now deleted without replacement, Rule 109.

(C) Previously approved on September 22, 1972 in paragraph (c)(6) of this section and now deleted without replacement, Rules 204, 206, 210, 211, 212, and 213.

(iii) Colusa County APCD.

(A) Previously approved on September 22, 1972 and now deleted without replacement Rules 3.1 and 5.1 to 5.17.

(B) Previously approved on September 22, 1972 in paragraph (c) of this section and now deleted without replacement, Rules 1.4, 2.13, 6.11 and 6.12.

(C) Previously approved on September 22, 1972 in paragraph (c)(6) of this section and now deleted without replacement, Rules 1.6, 2.9, 2.10, 2.11, 2.12, and 4.2.

(iv) Fresno County APCD.

(A) Previously approved on September 22, 1972 and now deleted without replacement Rules 501, 502, 504, 506, 508 to 512, 514, 516, and 517.

(B) Previously approved on September 22, 1972 in paragraph (c) of this section and now deleted without replacement, Rules 104, 105, 107, 109, 303, and 304.

(C) Previously approved on September 22, 1972 in paragraph (c)(6) of this section and now deleted without replacement, Rule 206.

(v) Glenn County APCD.

(A) Previously approved on September 22, 1972 and now deleted without replacement Rules 111, 113 to 117, 119 to 125, and 150.

(B) Previously approved on September 22, 1972 in paragraph (c) of this section and now deleted without replacement, Rules 151 and 153.

(C) Previously approved on September 22, 1972 in paragraph (c)(6) of this section and now deleted without replacement, Rules 53, 54, 55, and 97.

(vi) Kern County APCD (including Southeast Desert).

(A) Previously approved on September 22, 1972 and now deleted without replacement Rules 502, 505 to 510, 512 to 515, and 517.

(B) Previously approved on September 22, 1972 in paragraph (c) of this section and now deleted without replacement, Rules 107, 109, 303, and 304.

(C) Previously approved on September 22, 1972 in paragraph (c)(6) of this section and now deleted without replacement for implementation in Kern County, Southeast Desert Air Basin, Rules 204, 206, 210, 211, 212, and 213.

(D) Previously approved on September 22, 1972 in paragraph (c)(6) of this section and now deleted without replacement for implementation in Kern County, San Joaquin Valley Air Basin, Rules 107, 109, 206, 303, and 304.

(E) Previously approved on September 22, 1972 in paragraph (c)(6) of this section and now deleted without replacement Rule 403 (Southeast Desert).

(vii) Kings County APCD.

(A) Previously approved on September 22, 1972 and now deleted without replacement Rules 502 to 509, 511 to 517.

(B) Previously approved on September 22, 1972 in paragraph (c) of this section and now deleted without replacement, Rule 109.

(C) Previously approved on September 22, 1972 in paragraph (c)(6) of this section and now deleted without replacement, Rules 206 and 518.

(viii) Lassen County APCD.

(A) Previously approved on September 22, 1972 and now deleted without replacement Rules 1.5, 3.1, and 5.1 to 5.17.

(B) Previously approved on September 22, 1972 in paragraph (c)(6) of this section and now deleted without replacement, Rules 2.02, 2.04, 2.06, 2.10, 2.11, 2.12, and 2.13.

(ix) Madera County APCD.

(A) Previously approved on September 22, 1972 and now deleted without replacement Rules 507 to 510 and 512 to 517.

(B) Previously approved on September 22, 1972 in paragraph (c)(6) of this section and now deleted without replacement, Rule 206.

(x) Merced County APCD.

(A) Previously approved on September 22, 1972 and now deleted without replacement Rules 502, 503, 506 to 510, and 512 to 517.

(B) Previously approved on September 22, 1972 in paragraph (c) of this section and now deleted without replacement, Rules 107, 301 (Paragraphs c to g, i, and j), 303, and 304.

(C) Previously approved on September 22, 1972 in paragraph (c)(6) of this section and now deleted without replacement, Rule 206.

(xi) Modoc County APCD.

(A) Previously approved on September 22, 1972 and now deleted without replacement Rules 1.5 and 4.1 to 4.17.

(B) Previously approved on September 22, 1972 in paragraph (c) of this section and now deleted without replacement, Rule 1.4.

(C) Previously approved on September 22, 1972 in paragraph (c)(6) of this section and now deleted without replacement, Rules 2.02, 2.04, 2.06, 2.10, 2.12, and 2.13.

(D) Previously approved September 22, 1972 in paragraph (c)(6) of this section and now deleted with replacement in paragraph (c)(182)(i)(F)(*5*), (*6*), (*7*), and (*8*), Rule 2.3 ''Transfer,'' Rule 2.5 ''Cancellation of Application,'' Rule 2.7 ''Provision of Sampling and Testing Facilities,'' and Rule 2.9 ''Conditional Approval''.

(xii) San Joaquin County APCD.

(A) Previously approved on September 22, 1972 and now deleted without replacement Rules 502 and 506 to 509.

(B) Previously approved on September 22, 1972 in paragraph (c) of this

section and now deleted without replacement, Rules 107 and 109.

(C) Previously approved on September 22, 1972 in paragraph (c)(6) of this section and now deleted without replacement, Rule 206.

(xiii) Stanislaus County APCD.

(A) Previously approved on September 22, 1972 and now deleted without replacement Rules 303, 304, 502, 505 to 510 and 512 to 517.

(B) Previously approved on September 22, 1972 in paragraph (c) of this section and now deleted without replacement, Rule 107.

(C) Previously approved on September 22, 1972 in paragraph (c)(6) of this section and now deleted without replacement, Rule 206.

(xiv) Tulare County APCD.

(A) Previously approved on September 22, 1972 and now deleted without replacement Rules 303, 304, 501, 502, 506 to 514, 516 to 518.

(B) Previously approved on September 22, 1972 in paragraph (c) of this section and now deleted without replacement, Rules 107 and 109.

(C) Previously approved on September 22, 1972 in paragraph (c)(6) of this section and now deleted without replacement, Rule 206.

(xv) San Bernardino County Air Pollution Control District.

(A) Previously approved on December 21, 1975 and now deleted without replacement Rule 68.

(xvi) Northern Sonoma County Air Pollution Control District.

(A) Previously approved on September 22, 1972 and now deleted without replacement Rules 56, 64, 64.1 and 64.2.

(B) Previously approved on September 22, 1972 in paragraph (c) of this section and now deleted without replacement, Rules 42 and 100.

(C) Previously approved on September 22, 1972 in paragraph (c)(6) of this section and now deleted without replacement, Rules 013, 015, 019, 020, 021, and 022.

(D) Previously approved on September 22, 1972 in paragraph (c)(6) of this section and now deleted without replacement, Rules 10, 12 and 18.

(xvii) Los Angeles County Air Pollution Control District.

(A) Previously approved on September 22, 1972 and now deleted without replacement Rule 51.

(B) Previously approved on September 22, 1972 in paragraph (c) of this section and now deleted without replacement, Rules 43, 44, and Rule 120.

(xviii) Orange County Air Pollution Control District.

(A) Previously approved on September 22, 1972 and now deleted without replacement Rules 51, 67.1 and 68.

(xix) Riverside County Air Pollution Control District.

(A) Previously approved on September 22, 1972 and now deleted without replacement Rule 51.

(B) Previously approved on September 22, 1972 in paragraph (c) of this section and now deleted without replacement, Rules 43 and 44 (Mojave Desert AQMD only).

(xx) Mariposa County APCD.

(A) Previously approved on September 22, 1972 in paragraph (c) of this section and now deleted without replacement, Rule 17.

(B) Previously approved on September 22, 1972 in paragraph (c)(6) of this section and now deleted without replacement, Rule 16.

(xxi) Plumas County APCD.

(A) Previously approved on September 22, 1972 in paragraph (c) of this section and now deleted without replacement, Rules 3, 4, and 40.

(xxii) Sutter County APCD.

(A) Previously approved on September 22, 1972 in paragraph (c) of this section and now deleted without replacement, Rule 2.20.

(xxiii) Shasta County Air Pollution Control District.

(A) Previously approved on September 22, 1972 in paragraph (c)(6) of this section and now deleted without replacement, Rule 2.17 and 2.22.

(xxiv) Ventura County Air Pollution Control District.

(A) Previously approved on September 22, 1972 in paragraph (c)(6) of this section and now deleted without replacement, Rule 22.

(B) Previously approved on September 22, 1972 in paragraph (c)(6) of this section and now deleted without replacement, Rule 100.

(7) Information (Non-regulatory) regarding air quality surveillance submitted on July 19, 1972, by the Air Resources Board.

(8) Compliance schedules submitted on December 27, 1973, by the Air Resources Board.

(9) Compliance schedules submitted on February 19, 1974, by the Air Resources Board.

(10) Compliance schedules submitted on April 22, 1974, by the Air Resources Board.

(11) Compliance schedules submitted on June 7, 1974, by the Air Resources Board.

(12) Compliance schedules submitted on June 19, 1974, by the Air Resources Board.

(13) Compliance schedules submitted on September 4, 1974, by the Air Resources Board.

(14) Compliance schedules submitted on September 19, 1974, by the Air Resources Board.

(15) Compliance schedules submitted on October 18, 1974, by the Air Resources Board.

(16) Compliance schedules submitted on December 4, 1974, by the Air Resources Board.

(17) Compliance schedules submitted on January 13, 1975, by the Air Resources Board.

(18) Air quality maintenance area designations submitted on July 12, 1974, by the Governor.

(19)–(20) [Reserved]

(21) Revised regulations for the following APCD's submitted on July 25, 1973, by the Governor.

(i) Lassen County APCD.

(A) Appendix A (Implementation Plan for Agricultural Burning) and Appendix B (Enforcement).

(ii) Modoc County APCD.

(A) Rule 3:10A and Regulation V (Rules 5:1 to 5:7).

(iii) Siskiyou County APCD.

(A) Rules 2.13, 4.5, 4.12, 4.13, 4.14, and Implementation Plan for Agricultural Burning.

(iv) Bay Area APCD.

(A) Regulation 1.

(*1*) Division 1, Sections 1000–1010.

(*2*) Division 2, Section 2000.

(*3*) Division 3, Sections 3000–3004, 3100–3111, 3115–3118, 3120, and 3200–3500.

(*4*) Division 4.

(B) Regulation 4.

(*1*) Sections 1–2.

(C) Regulation 2.

(*1*) Division 1, Sections 1214 to 1214.3.

(D) Regulation 3.

(*1*) Division 1, Sections 1205 to 1205.3.

(v) Butte County APCD.

(A) Sections 1–1 to 1–35, 2–8, 2–10 to 2–11, 2A–1 to 2A–18, 3–2 to 3–2.1, 3–6, 3–9, 3–10.1, 3–11.1, 3.14, and 3.16.

(vi) San Diego County APCD.

(A) Rules 41, 55, 58, and 101–113.

(B) Previously approved on May 11, 1977 and now deleted without replacement Rule 41.

(C) Previously approved on May 11, 1977 and now deleted without replacement, Rule 55.

(D) Previously approved on May 11, 1977 in paragraph (c)(21)(vi)(A) of this section and now deleted Rules 105, 106, 107, 110, 111, and 112 (now replaced by Rule 101).

(vii) Tehama County APCD.

(A) Rules 1:2, 3:1–3, 3:3a, 3:3b, 3:4–3:5, 3:5a, 3:6–3:14, 4:6, and Implementation Plan for Agricultural Burning.

(B) Previously approved on May 11, 1977 and now deleted without replacement Rule 41.

(viii) Yuba County APCD.

(A) Rules 1.1, 2.1–2.2, 2.10, 4.11, and Agricultural Burning Regulations, Sections 1 to 6.

(B) Rule 4.5.

(C) Previously approved on August 22, 1977 in paragraph (c)(21)(viii)(A) of this section and now deleted without replacement, Rule 4.11.

(ix) Kings County APCD.

(A) Rules 102, 105–108, 110, 404–406, 409, 417–I, II, IV, and 510.

(B) Rule 111.

(C) Previously approved on August 22, 1977 and now deleted without replacement Rule 510.

(D) Previously approved on August 22, 1977 in paragraph (c)(21)(ix)(A) of this section and now deleted without replacement, Rule 107.

(x) Colusa County APCD.

(A) Rule 6.5 and Amendment Number 3.

(B) Rule 4.4g.

(xi) Imperial County APCD.

(A) Agricultural Burning Implementation Plan (Rules 200–206).

(xii) Sacramento County APCD

(A) Rules 72, 90, 91, and 92.

(xiii) Ventura County APCD.

(A) Rules 2, 37, 56, 59, 60, and 101.

(B) Previously approved on August 15, 1977 in paragraph (c)(21)(xiii)(A) of this section and now deleted without replacement, Rule 60.

(xiv) Yolo-Solano APCD.

(A) New or amended Rules 1.2 (a, b, d to g, i to x, and z to ae), 1.4, 2.4(e), 2.8, 2.9, 4.1 to 4.5, 5.1 to 5.18, 6.1 (i) and (j), 6.2 to 6.5, and 6.7 to 6.8.

(B) Previously approved on June 14, 1978 and now deleted without replacement Rules 4.4, 4.5, 5.2, 5.3, 5.5, 5.7 to 5.9, and 5.13 to 5.17.

(C) Previously approved on June 14, 1978 in paragraph (c)(21)(xiv)(A) of this section and now deleted without replacement, Rule 5.18.

(D) Previously approved on June 14, 1978 in paragraph (c)(21)(xiv)(A) of this section and now deleted without replacement, Rule 2.4.

(xv) San Bernardino County APCD.

(A) New or amended Rules 5(a), 53A, 57, 57.1, 57.2.

(xvi) Santa Barbara County APCD.

(A) Rules 2(a, b, k, l, m, n, o, p, q, r, s, t, u, v, w), 40 [with the exception of 40(4)(m)].

(xvii) Calaveras County APCD.

(A) Rules 110 and 402(f).

(xviii) Los Angeles County APCD (Metropolitan Los Angeles portion).

(A) Amended Rule 45.

(B) Previously approved on September 8, 1978 in paragraph (c)(21)(xviii)(A) of this section and now deleted without replacement, Rule 45.

(22) Revised regulations for the following APCD's submitted on November 2, 1973 by the Governor's designee.

(i) Bay Area APCD.

(A) Regulation 2.

(*1*) Division 1, Section 1222.

(*2*) Division 3, Section 3211.

(*3*) Division 4, Section 4113.

(*4*) Division 8, Sections 8414–8416.

(*5*) Division 9, Sections 9613, 9615, 9711.3, and 9711.5.

(*6*) Division 11, Section 11101.

(23) Revised regulations for the following APCD's submitted on January 22, 1974 by the Governor's designee.

(i) Sacramento County APCD.

(A) Rule 30.

(ii) Santa Barbara County APCD.

(A) Rules 22, 24.1, 24.2.

(24) Revised regulations for the following APVD's submitted on July 19, 1974, by the Governor's designee.

(i) Sutter County APCD.

(A) Rule 1.3

(ii) Bay Area APCD.

(A) Regulation 1: (*1*) Sections 3112–3114, 3119 and 3122.

(iii) San Diego County APCD.

(A) Regulation IX.

(B) Rule 61.

(iv) Stanislaus County APCD.

(A) Rules 103, 108, 108.1, 113, 401, 402, 403, 404, 405, 409.1, 409.2, 418, 421, 505, 518, and 401.1.

(B) Rule 110.

(C) Previously approved on August 22, 1977 in paragraph (c)(iv)(A) of this section and now deleted without replacement, Rule 518.

(v) Tehama County APCD.

(A) Rules 3:14 and 4:18.

(B) Rule 4:17.

(vi) Shasta County APCD.

(A) Rules 1:1 to 1:2, 2:6(1.)(a), 2:6(1.)(b) (i–ii and iv–vii) 2:6(1.)(c)(i–vi), 2:6(1.)(d–e), 2:6(2–4), 2:7, 2:8(a–c), 2:9, 2:11, 2:14, 2:25, 3:1 to 3:9, 3:11 to 3:12, and 4:1 to 4:23.

(B) Rule 3:10.

(C) Previously approved on August 22, 1977 and now deleted without replacement Rules 4.2 to 4.4, 4.8 to 4.10, 4.15, and 4.23.

(D) Previously approved on August 22, 1977 in paragraph (c)(24)(vi)(A) of this section and now deleted without replacement, Rule 3.7.

(vii) Kern County APCD.

(A) Rules 102, 103, 108, 108.1, 110, 113, 114, 301, 305, 401, 404, 405, 407.3, 409, 411, 413, 414, 417–I and II, 504, 516, and 518

(B) Rule 111.

(C) Rules 601–615, except those portions pertaining to sulfur dioxide and the 12-hour carbon monoxide criteria levels.

(D) Previously approved on August 22, 1977 and now deleted without replacement Rule 516 (including Southeast Desert).

(E) Previously approved on August 22, 1977 and now deleted without replacement for implementation in the Southeast Desert Air Basin, Rule 404.

(F) Previously approved on August 22, 1977 in paragraph (c)(vii)(A) of this section and now deleted without replacement for implementation in Kern

County, Southeast Desert Air Basin, Rule 518.

(G) Previously approved on August 22, 1977 in paragraph (c)(vii)(A) of this section and now deleted without replacement for implementation in Kern County, San Joaquin Valley Air Basin, Rule 518.

(viii) Sacramento County APCD.

(A) Rules 11, 39, 44, 70, 73, and 111.

(B) Rules 123 and 124, except those portions that pertain to the 12-hour CO criteria level.

(ix) Yolo-Solano APCD.

(A) Rule 2.22.

(B) New or amended Rules 1.2(c, h, and y), 1.3, 2.11 to 2.16, 2.19, 4.3, 5.4, 5.6, and 5.12.

(C) Previously approved on June 14, 1978 and now deleted without replacement Rules 5.6 and 5.12.

(x) Ventura County APCD.

(A) Rules 2, 3, 31, 32, 200, 203, and 204.

(B) Rule 32.

(C) Rules 70, 73.

(D) Rule 96.

(E) Rule 111.

(F) Previously approved on August 15, 1977 in paragraph (c)(x)(A) of this section and now deleted without replacement, Rule 3.

(xi) Santa Barbara County Air Pollution Control District.

(A) Rules 150 to 152, 154 to 159, 160A, and 161 to 164, except those portions pertaining to nitrogen oxides, sulfur dioxide and the 12-hour carbon monoxide criteria levels.

(25) Revised regulations for the following APCD's submitted on October 23, 1974 by the Governor's designee.

(i) Fresno County APCD.

(A) Rules 102, 103, 108, 108.1, 111–114, 401, 404–406, 408, 409.1, 409.2, 416, 416.1a, b, c(2), c(3), d, e(2), and f, 505 and 518.

(B) Rule 110.

(C) New or amended Rules 402 (a to g), 416.1(c)(1), 416.1(e)(1), 416.1(e)(3), and 416.1(e)(4).

(D) Rules 601–615, except those portions pertaining to sulfur dioxide and the 12-hour carbon monoxide criteria levels.

(E) Previously approved on August 22, 1977 and now deleted without replacement Rule 505.

(F) Previously approved on August 22, 1977 in paragraph (c)(25)(i)(A) of this section and now deleted without replacement, Rule 518.

(ii) San Joaquin County APCD.

(A) Rules 102, 103, 108, 108.1, 108.2, 113, 305, 404–406, 407.2, 407.3, 408, 408.1, 409.1, 409.2, 410, 413, 414, 416, 416.1A to C, and D.3 to E., 417, 420, 420.1, 421, 504, 505, and 510–520.

(B) Rule 110.

(C) New or amended Rules 416.1 (D)(1) and (D)(2).

(D) Previously approved on August 22, 1977 and now deleted without replacement Rules 504, 505, 510, 512 to 518, and 520.

(E) Previously approved on August 22, 1977 in paragraph (c)(25)(ii)(A) of this section and now deleted without replacement, Rule 519.

(iii) Lake County APCD.

(A) Parts II—V, Sections 3–7 of Part VI, Parts XI–XIII, Appendix A (Agricultural Burning Definitions A–M, Burning Regulations/Agricultural Burning (Farm) 1–9, /Farm 1–3, /Range 1–2), Appendix B (Parts I–II, Part IV–1, 2, 5, and 6, Part V–1, 4, 5 and 6, Parts VI–VII, Part VIII–1–7 and 9, Parts IX–X), Tables I–IV.

(iv) Tulare County APCD.

(A) Rules 102, 103, 108.1, 110, 112–114, 302, 401, 404–406, 407.3, 408, 410, 410.1, 410.2, 411, 420, 503–505, and 515.

(B) Previously approved on August 22, 1977 and now deleted without replacement Rules 503 to 505, 515, and 519.

(v) Ventura County APCD.

(A) Rules 2 and 125.

(vi) Santa Barbara County Air Pollution Control District.

(A) Rule 160B, except those portions pertaining to nitrogen oxides, sulfur dioxide and the 12-hour carbon monoxide criteria levels.

(vii) Monterey Bay Unified APCD.

(A) Rules 100 to 106, 300 to 303, 400 to 401, 403, 404(a)(b)(d), 405 to 408, 412 to 417, 419 to 420, 500 to 508, 600 to 616, and 800 to 816.

(B) Previously approved on October 27, 1977 in paragraph (c)(25)(vii)(A) of this section and now deleted without replacement, Rules 302 and 303.

(26) Revised regulations for the following APCD's submitted on January 10, 1975, by the Governor's designee.

(i) Sutter County APCD

(A) Rule 4.1

(ii) Bay Area APCD

(A) Regulation 2: (*1*) Sections 2018.1–2.

(B) Regulation 7.

(C) Regulation 8.

(D) Previously approved on May 11, 1977 in paragraph (c)(26)(ii)(B) of this section and now deleted without replacement, Regulation 7.

(iii) Butte County APCD.

(A) Sections 3–11, 3–12, and 3–12.1.

(iv) Glenn County APCD.

(A) Sections 2, 3.1, 10–14.3, 16, 17, 21, 21.1, 24, 57, 58, 81, 85, 86, 95.1, 118, 122.1–122.3, 154 and 155.

(B) Rules 95.2 and 95.3.

(C) Previously approved on May 11, 1977 and now deleted without replacement Rules 118 and 122.1 to 122.3.

(D) Previously approved on May 11, 1977 in paragraph (c)(26)(iv)(A) of this section and now deleted without replacement, Rule 155.

(E) Previously approved on August 22, 1977 in paragraph (c)(26)(iv)(A) of this section and now deleted without replacement, Rule 3.1.

(v) Yuba County APCD.

(A) Agricultural Burning Regulations, sections 1 and 3.

(vi) Colusa County APCD.

(A) Rules 6.2 and 6.4.d. (1–2).

(vii) Fresno County APCD.

(A) Rules 409, 417, 503, 507, 513, and 515.

(B) Previously approved on August 22, 1977 and now deleted without replacement Rules 503, 507, 513, and 515.

(viii) Mariposa County APCD.

(A) Rules 101, 102, 201, 202, 203 (a–f, h, i, and k), 204–216, 301–303, 305–306, 308–313, 315–323, 401–403, 405–409, and 600–618.

(B) Rule 203(j).

(C) Previously approved on August 22, 1977 and now deleted without replacement Rules 601, 602, 604 to 609, 611 to 616, and 618.

(D) Previously approved on August 22, 1977 in paragraph (c)(26)(viii)(A) of this section and now deleted without replacement, Rule 617.

(ix) Sierra County APCD.

(A) Rules 101, 102, 201–216, 301–323, 405–409, 601–620, 6, 27, 29, and 51–56.

(B) Previously approved and now deleted, Rule 102.

(C) Previously approved on August 22, 1977 in paragraph (c)(26)(ix)(A) of this section and now deleted without replacement Rules 619 and 620.

(D) Previously approved on August 22, 1977 in paragraph (c)(26)(ix)(A) of this section and now deleted without replacement Rules 201 and 205.

(x) Shasta County APCD.

(A) Rules 2:6(5)(b), 3:1, 3:2, 4:6, and 4:14.

(xi) Tulare County APCD.

(A) Rules 417 and 417.1a. thru d., e.2., and f.

(B) New or amended Rules 417.1 (e)(1), (e)(3) and (e)(4).

(xii) Kern County APCD.

(A) Rules 410 and 503.

(xiii) Madera County APCD.

(A) Rules 102, 103, 105, 108, 112–114, 301, 305, 401, 402, (a–e, and g), 404–406, 407.2, 407.3, 408, 409, 409.1 409.2, 412, 416, 416.1a, b, c(2), c(3), d, e(2), f, 504, 505, and 518.

(B) Rule 402(f).

(C) Rule 110.

(D) New or amended Rules 416.1 (c)(1), (e)(1), (e)(3), and (e)(4).

(xiv) Yolo-Solano APCD.

(A) New or amended Rule 6.1 (a), (b), (c), (d), (e), and (g) (1, 2, and 3).

(xv) Monterey Bay Unified APCD.

(A) Rules 49 to 411 and 421.

(xvi) Plumas County APCD.

(A) Rule 203(j).

(B) New or amended Rules 101, 102, 201, 202, 204, 206, 209, 210(a), 214, 216, 216–49, 216–50, 216–51, 216–54, 216–55, 216–56, 216–1, 216–2, 216–3, 305, 306, 309, 310, 311, 312, 313, 314, 315, 316, 317, 318, 401, 403, 405, 406, 408, 701, 702, 704, 705, 706, 707, 708, 709, 711, 712, 713, 714, 715, 716, 717.

(C) Previously approved and now deleted (without replacement) Rules 51.7, 57.5, 62, 70.

(D) Previously approved on June 14, 1978 and now deleted without replacement Rules 705 to 709.

(E) Previously approved and now deleted, Rule 102.

(F) Previously approved on June 14, 1978 in paragraph (c)(26)(xvi)(B) of this section and now deleted without replacement, Rule 717.

(xvii) Placer County APCD.

(A) New or amended Rules 102, 105, 201, 202, 204, 209, 312, 403, 405, 406, 701, 705, 707, 711, 712, 713, 714, 716, 717.

(B) Previously approved on June 14, 1978 and now deleted without replacement Rules 701, 707, 711 to 714, and 716 (Mountain Counties Air Basin).

(C) Previously approved on June 14, 1978 and now deleted without replacement Rules 701, 705, 707, 711 to 714, and 716 (Lake Tahoe Air Basin).

(D) Previously approved on June 14, 1978 in paragraph (c)(26)(xvii)(A) of this section and now deleted without replacement, Rule 105.

(E) Previously approved on June 14, 1978 in paragraph (c)(26)(xvii)(A) of this section and now deleted without replacement Rule 717 (Lake Tahoe Air Basin).

(F) Previously approved on June 14, 1978 in paragraph (c)(26)(xvii)(A) of this section and now deleted without replacement Rules 705 and 717 (Mountain Counties Air Basin).

(G) Previously approved on June 14, 1978 in paragraph (c)(26)(xvii)(A) of this section and now deleted without replacement Rules 701, 705, 707, 711 to 714, 716, and 717 (Sacramento Valley Air Basin).

(27) Revised regulations for the following APCD's submitted on April 10, 1975, by the Governor's designee.

(i) Stanislaus County APCD.

(A) Rule 409.

(ii) Tehama County APCD.

(A) Rule 4:6.

(iii) Sacramento County APCD.

(A) Rules 12, 22a, 22b, 25, 32–34, and 40.

(iv) Bay Area APCD.

(A) Regulation 2, section 1302.2 and section 1302.22.

(B) Rules 32, 33, 34, 38, 40.

(v) San Bernardino County APCD.

(A) New or amended Rule 73.

(vi) Riverside County APCD.

(A) New or amended Rule 57.

(vii) Nevada County APCD.

(A) New or amended Rules 101, 102, 105, 106, 107, 201, 202, 203 [with exception of (g)], 204, 206, 208, 209, 210(a), 212, 214, 215, 301, 302, 303, 305, 306, 307, 308, 309, 310, 311, 312, 313, 314, 315, 316, 317, 318, 322, 401, 403, 405, 406, 408, 601, 602, 701, 702, 703, 705, 706, 707, 708, 709, 711, 712, 713, 714, 715, 716, 717.

(B) Previously approved on June 14, 1978 and now deleted without replacement Rules 701 to 703, 705 to 709, and 712 to 716.

(C) Previously approved and now deleted, Rule 102.

(D) Previously approved on June 14, 1978 in paragraph (c)(27)(vii)(A) of this section and now deleted without replacement, Rules 105, 601, and 602.

(E) Previously approved on June 14, 1978 in paragraph (c)(27)(vii)(A) of this section and now deleted without replacement Rule 717.

(viii) El Dorado County APCD.

(A) New or amended Rules 101, 102, 202, 204, 206, 209, 210(a), 212, 214, 301, 305, 306, 309, 310, 311, 312, 313, 315, 316, 317, 318, 323, 401, 403, 405, 406, 408, 601, 602, 701, 702, 704, 705, 706, 707, 708, 709, 711, 712, 713, 714, 715, 716, 717.

(B) Previously approved and now deleted (without replacement) Rules 5, 6, 7.

(C) Previously approved on June 14, 1978 in paragraph (c)(27)(viii)(A) of this section and now deleted Rule 101.

(D) Previously approved on June 14, 1978 in paragraph (c)(27)(viii)(A) of this section and now deleted without replacement, Rules 323, 601, and 602.

(E) Previously approved on June 14, 1978 in paragraph (c)(27)(viii)(A) and now deleted without replacement Rules 701, 702, 704 to 709, and 711 to 717.

(F) Previously approved on June 14, 1978 in paragraph (c)(27)(vii)(A) of this section and now deleted without replacement Rules 106, 107, 201, 215, 401, and 403.

(ix) [Reserved]

(x) Santa Barbara County APCD.

(A) Rules 32, 36, 36.3, 36.4, 36.5, 37, 38.

(28) Revised regulations for the following APCD's submitted on July 22, 1975, by the Governor's designee.

(i) Sutter County APCD

(A) Rules 1.2, 2.82, and 4.11.

(ii) San Diego County APCD.

(A) Rule 66.

(iii) Yuba County APCD

(A) Rule 1.1.

(iv) Calaveras County APCD.

(A) Rules 102, 201–215, 301–323, 401–403, 405–408, 409 (Public Records), 601–604, 700–717, 105, 106, 110, 407(b), 409 (Organic Solvents), 409.1 (Architectural Coatings), 409.2 (Disposal and Evaporation of Solvents), 412, and 413.

(B) Previously approved on August 22, 1977 and now deleted without replacement Rules 701, 704 to 709, 711 to 714, and 716.

(C) Previously approved on August 22, 1977 in paragraph (c)(28)(iv)(A) of this section and now deleted without replacement Rule 717.

(v) Tuolumne County APCD.

(A) Rules 102, 201, 202, 203, (a–f, h, i, and k), 204–216, 301–303, 305–306, 308–313, 315–323, 400–403, 405–408, 409 (Public Records), 600–618, 105–110, 301–304, 409 (Fuel Burning Equipment, Oxides of Nitrogen), 410, and 412–414.

(vi) Kings County APCD.

(A) Rule 410.

(vii) Shasta County APCD.

(A) Rule 2.8(e).

(viii) Kern County APCD.

(A) Rules 115, 407.1, 422, and 423.

(B) Previously approved on August 22, 1977 in paragraph (c)(28)(viii)(A) of this section and now deleted without replacement, Rules 422 and 423.

(ix) Sacramento County APCD.

(A) Rule 93.

(x) Riverside County APCD.

(A) New or amended Rule 53.

(xi) Orange County APCD (Metropolitan Los Angeles portion).

(A) Amended Rule 53.

(29) Revised regulations for the following APCD's submitted on November 3, 1975 by the Governor's designee.

(i) Lake County APCD.

(A) Part III, Number 59a.

(ii) Sacramento County APCD.

(A) Rules 13 and 14.

(B) Rules 71, 112, and 113.

(iii) Monterey Bay Unified APCD.

(A) Rule 418.

(iv) Bay Area APCD.

(A) Regulation 2, section 1302.21 and section 1302.23.

(v) San Diego County.

(A) Rule 63.

(B) Rules 112, 113.

(vi) Ventura County APCD.

(A) Rules 65, 66, 72, and 73.

(B) Previously approved on August 15, 1977 and now deleted without replacement Rules 65 and 66.

(C) Previously approved on August 15, 1977 in paragraph (c)(29)(vi)(A) of this section and now deleted without replacement, Rule 72 (72–72.8).

(30) Revised regulations for the following APCD's submitted on February 10, 1976 by the Governor's designee.

(i) Bay Area APCD

(A) Regulation 1: (*1*) Section 3121.

(B) Regulation 6.

(ii) Butte County APCD

(A) Section 3–11.2

(iii) Yuba County APCD.

(A) Agricultural Burning Regulations, sections 1 and 3.

(iv) Colusa County APCD.

(A) Rule 6.6A.I and 6.6A.II–1. (a–f).

(v) Fresno County APCD.

(A) Rules 115, 422, 423, and 407.

(B) Previously approved on August 22, 1977 in paragraph (c)(30)(v)(A) of this section and now deleted without replacement, Rules 422 and 423.

(vi) San Joaquin County APCD.

(A) Rules 114, 401, 402, 407.1, 409, 411, 422 and 423.

(B) Previously approved on August 22, 1977 in paragraph (c)(30)(vi)(A) of this section and now deleted without replacement, Rules 422 and 423.

(C) Rule 411.1 and 411.2.

(vii) Lake County APCD.

(A) Table V.

(viii) Sacramento County APCD.

(A) Rules 94–97.

(ix) Ventura County APCD.

(A) Rules 70 and 71.

(x) Southern California APCD.

(A) New or amended Rules 501, 502, 506, 507, 508, 509, 511, 512, 513, 514, 515, 516, 517, 518, 801, 803, 804, 807, 808, 809, 810, 811, 813, 814, 815, 817.

(B) Previously approved on June 14, 1978 and now deleted without replacement Rules 501, 502, 506 to 509, 511 to 518, 801, 803 to 804, 807 to 811, 813 to 815, and 817.

(xi) Santa Barbara County APCD.

(A) Rule 32.1.

(31) Revised regulations for the following APCD's submitted on April 21, 1976, by the Governor's designee.

(i) Great Basin Unified APCD.

(A) Rules 200 to 216.

(B) Rules 100 to 107, 215, 300 to 303, 400 to 402, 404 to 413, 416 to 421, 500 to 501, 600 to 616, and 800 to 817.

(C) Alpine County APCD: Rules 1.4, 3.1, 4.2–1, 4.7, 4.7–1, 4.8, 4.10, 4.11, and 5.18.

(D) Inyo County APCD: Rules 1.3, 3.1, 4.1, 4.10, 4.11, 4.12, and 5.1.

(E) Mono County APCD: Rules 1.4, 3.1, 4.2–1, 4.7, 4.7–1, 4.8, 4.10, 4.11, 5.1, and 5.18.

(F) Previously approved on June 6, 1977 and now deleted without replacement Rules 600 to 615 and 800 to 817.

(G) Previously approved on June 6, 1977 in paragraph (c)(31)(i)(B) of this section and now deleted without replacement, Rules 105, 302, and 303.

(H) Previously approved on December 8, 1976 in paragraph (c)(31)(i)(A) of this

section and now deleted without replacement Rules 211 and 214.

(I) Previously approved on June 6, 1977 in paragraph (c)(31)(i)(B) of this section and now deleted without replacement Rules 107 and 616.

(ii) Sutter County APCD

(A) Rule 4.1

(iii) San Diego County APCD.

(A) Rule 5.

(B) Previously approved on May 11, 1977 in paragraph (c)(31)(iii)(A) of this section and now deleted without replacement, Rule 5.

(iv) Glenn County APCD

(A) Sections 14.3 and 15.

(v) Kings County APCD.

(A) Rule 411.

(B) Rules 412 and 412.1.

(vi) Southern California APCD.

(A) Rules 461 and 462.

(B) New or amended Rules 103, 104, 105, 106.

(C) Rules 201–207, 209–212, 214–217, and 219.

(D) Previously approved on November 9, 1978 and now deleted without replacement Rule 211.

(E) Previously approved on June 14, 1978 in paragraph (c)(31)(vi)(B) of this section and now deleted without replacement, Rule 105.

(F) Previously approved on November 9, 1978 in paragraph (c)(31)(vi)(C) of this section and now deleted without replacement for implementation in the Antelope Valley Air Pollution Control District, Rules 211, 214, 215, and 216.

(vii) Santa Barbara County APCD.

(A) Rule 35.1 and 35.2.

(B) Rule 2(x).

(C) Rule 63, except those portions pertaining to sulfur dioxide and the 12-hour carbon monoxide criteria levels.

(viii) Fresno County APCD.

(A) Rule 411 and 411.1.

(ix) Kern County APCD.

(A) Rule 412 and 412.1.

(x) Stanislaus County APCD.

(A) Rule 411 and 411.1.

(xi) Tulare County APCD.

(A) Rule 412 and 412.1.

(xii) Madera County APCD.

(A) Rule 411.1 and 411.2.

(xiii) Ventura County APCD.

(A) Rules 2, 4, 36, 40, 41, 42, 43, 104, 201, and 202.

(B) Previously approved on August 15, 1977 and now deleted without replacement Rule 43.

(xiv) Yolo-Solano APCD.

(A) New or amended Rules 6.1(f) (1 and 2), (g)(4), (h) (1 and 2) and 6.6.

(xv) Nevada County APCD.

(A) Amended Rule 211.

(xvi) Bay Area APCD.

(A) Regulation 2, section 3212.

(B) Regulation 3, section 3203.

(xvii) [Reserved]

(xviii) Amador County APCD.

(A) Rule 404.

(B) New or amended Rules 101, 102, 104, 105, 106, 107, 201, 202, 204, 206, 207.1, 209, 210(A), 211, 212, 213.2, 213.3, 214, 305, 307, 308, 312, 401, 402, 403, 405, 406, 408, 409, 601, 602, 603, 702, 704, 705, 706, 707, 708, 709, 711, 712, 713, 714, 715, 716, 717.

(C) Previously approved and now deleted (without replacement) Rules 18.1 (Regulation V), 22 (Regulation V).

(D) Previously approved on January 24, 1978 and now deleted without replacement Rules 705 to 709 and 712 to 716.

(E) Previously approved on January 24, 1978 and now deleted without replacement Rules 213.2 and 213.3.

(F) Previously approved on June 14, 1978 in paragraph (c)(31)(xvii)(B) of this section and now deleted without replacement, Rule 105.

(G) Previously approved on January 24, 1978 in paragraph (c)(31)(xviii)(B) of this section and now deleted without replacement Rule 717.

(32) Revised regulations for the following APCD's submitted on August 2, 1976 by the Governor's designee.

(i) Bay Area APCD.

(A) Regulation 2: (*1*) Sections 2022.1–2, 2035.1, 3211.1, and Divisions 16–18.

(ii) Stanislaus County APCD.

(A) Rules 102, 104, 105, 111, 112, 114, 301, 305, 407.1, 416, 416.1, 422, 423, 501, 504, and 511.

(B) Previously approved on August 22, 1977 and now deleted without replacement Rules 501, 404, and 511.

(C) Previously approved on August 22, 1977 in paragraph (c)(32)(ii)(A) of this section and now deleted without replacement, Rules 104, 105, 112, 422, and 423.

(iii) Merced County APCD.

(A) Rules 411 and 411.1.

(B) Rule 109.

(C) New or amended Rules 102, 103, 103.1, 104, 105, 108.1, 110 to 115, 302, 401, 404, 405, 407.1, 408.1, 408.2, 409, 409.1,

409.2, 410, 412, 416, 416.1[(I), (II) (A–L), (II) (N–O), (III), (IV), (V), and (VI)], 421(a), 501, 504, 505, 511, and 518.

(D) Previously approved and now deleted (without replacement) Rules 102(hh) and 102(ii).

(E) Previously approved on June 14, 1978 and now deleted without replacement Rules 105, 501, and 504.

(F) Previously approved on June 14, 1978 in paragraph (c)(32)(iii)(C) of this section and now deleted without replacement, Rule 302.

(G) Previously approved on June 14, 1978 in paragraph (c)(32)(iii)(C) of this section and now deleted without replacement Rules 505 and 518.

(iv) Southern California APCD.

(A) New or amended Rules 403, 404, 405, 407, 408, 409, 432, 441, 443, 464, 465, 467, 470, 471, 472, 473, 504, 505, 510, 802, 805, 806, 812, 816.

(B) Previously approved and deleted (without replacement).

(*1*) Los Angeles County APCD Rules 53.1, 55.

(*2*) San Bernardino County APCD Rules 50, 51.

(*3*) Riverside County APCD Rule 55.

(*4*) Orange County APCD Rule 55.

(C) Rules 202 and 219.

(D) Previously approved on June 14, 1978 and now deleted without replacement Rules 504, 505, 510, 802, 805, 806, 812, and 816.

(E) Previously approved on June 14, 1978 and now deleted without replacement.

(*1*) Los Angeles County APCD Rule 505.

(*2*) Riverside County APCD Rule 505.

(*3*) San Bernadino County APCD Rule 505.

(F) Previously approved on June 14, 1978 and now deleted without replacement Rule 432.

(v) Plumas County APCD.

(A) Amended Rule 324.

(vi) El Dorado County APCD.

(A) Amended Rule 211.

(33)–(34) [Reserved]

(35) Revised regulations for the following APCDs submitted on November 10, 1976 by the Governor's designee.

(i) Sacramento County APCD.

(A) Rules 1, 2, 11, 12, 21, 22a, 22b, 24, 25, 27, 28, 29, 33, 39, 44, 70, 71, 90, 92, 93, 94, 95, 96, 97, 98, and definitions list addition to Regulation VII.

(B) Rule 14.

(ii) Southern California APCD.

(A) Rule 461.

(iii) Ventura County APCD.

(A) Rule 70.

(B) Rules 2, 57, 72, and 73 and Regulation VII (Rules 110–129).

(C) Previously approved on August 15, 1977 and now deleted without replacement Rules 115 to 119, 122, and 128 to 129.

(D) Previously approved on August 15, 1977 in paragraph (c)(35)(iii)(B) of this section and now deleted without replacement, Rules 72 (72.9–72.10) and 73.

(iv) Santa Barbara County APCD.

(A) Rule 35.2.

(v) San Joaquin County APCD.

(A) Rules 102, 103, 103.1, 104, 105, 111, 112, 301, 305, 402, 416.1, 501, 504, 511.

(B) Previously approved on October 4, 1977 and now deleted without replacement Rule 501.

(C) Previously approved on October 4, 1977 in paragraph (c)(35)(v)(A) of this section and now deleted without replacement, Rules 104, 105, and 112.

(vi) Tulare County APCD.

(A) Rules 102, 103, 103.1, 104, 105, 110, 112, 115, 305 (402 paragraphs a. through e. and g.), 405, 407.1, 407.3, 409, 417.1, and 421.

(B) Rules 111 and 402(f).

(C) Previously approved on September 21, 1976 and now deleted without replacement Rules 105 and 305.

(vii) Fresno County APCD.

(A) Rules 407 and 408.

(viii) Imperial County APCD.

(A) Rules 100, 114.5, 131.5, and 148.D(3).

(ix) Del Norte County APCD.

(A) Rule 540.

(B) [Reserved]

(C) New or amended Rules 100, 110, 120, 130, 150, 160 (except 160(a) and noncriteria pollutants), 190, 240(d) (except paragraph (3)), 300, 310, 320, 340, 400(b), 410(a), 410(c), 420, 430, 440, 470, 480, 482, 500, 510, 520, 600, 610, 620, 630, 640, and 650; and the following portions of Regulation 2: General prohibitions (all of page 1), Articles I and II, paragraphs A1, A2, A3, A4, 5, 7, and 8 of Article III, and Articles IV to VII.

(x) San Diego County APCD.

(A) Rules 2(k), 3, 50, 52, 53, 60, 62.

(xi) Monterey Bay Unified APCD.

(A) Rules 101, 104, 106, 214, 301, 404(c), 406, 407, 415, 601 to 603, 609, 801, 805, and 811.

(xii) San Luis Obispo County APCD.

(A) New or amended Rules 101 *Title,* 102, 103, 105(A)(2) through 105(A)(46), 106, 108, 109, 110 *Enforcement,* 111, 401, 403, 405, 408, 409, 410, 801, 802, 803, 804, 805, 806, 807, 808, 809, 810, 811, 812, 813, 814, 815, 816, 817.

(B) Rule 107.

(C) Rules previously approved and now deleted (without replacement) 101(1)(b), 101(2), 101(3), and 101(4) *Effective Date,* 110 *Prohibitions,* 116(1), 116(3), 119(1) and 119(4).

(D) Amended Rules 501 and 502 (sections A–F, H–I, K–N, O(1), P–Q).

(E) New or amended Rules 202, 205, 206, 207, 208, 209, 210, and 211.

(F) Previously approved on August 4, 1978 and now deleted without replacement Rules 801 to 817.

(G) Previously approved on August 4, 1978 and now deleted without replacement Rules 102 and 408.

(H) Previously approved on August 4, 1978 in paragraph (c)(35)(xii)(A) of this section and now deleted without replacement, Rules 110 and 111.

(I) Previously approved on February 1, 1984 in paragraph (c)(35)(xii)(E) of this section and now deleted without replacement Rules 202, 206, 207, and 208.

(xiii) Kern County APCD.

(A) New or amended Rules 102, 102(d), 102(oo), 103, 103.1, 104 to 105, 110, 112, 301(f), 305(a), 402 (c) and (e), 417(I)(A), 417(II)(B)(L), 501, and 511.

(B) Rule 504.

(C) Previously approved on March 22, 1978 and now deleted without replacement Rules 105, 501, 504, and 511 (including Southeast Desert).

(D) Previously approved on March 22, 1978 in paragraph (c)(35)(xiii)(A) of this section and now deleted without replacement, Rule 104.

(E) Previously approved on March 22, 1978 in paragraph (c)(35)(xiii)(A) of this section and now deleted without replacement for implementation in the San Joaquin Valley Air Basin, Rule 104.

(F) Previously approved on March 22, 1978, in paragraph (c)(35)(xiii)(A) of this section and now deleted with replacement in paragraph (c)(239)(i)(C)(*6*) of this section, Rule 103.1, ''Inspection of Public Records,'' adopted on August 31, 1976.

(xiv) Humboldt County APCD.

(A) Rule 540.

(B) [Reserved]

(C) New or amended Rules 100, 110, 120, 130, 150, 160 (except 160(a) and non-criteria pollutants), 190, 240(d) (except paragraph (3)), 300, 310, 320, 340, 400(b), 410(a), 410(c), 420, 430, 440, 470, 480, 482, 500, 510, 520, 600, 610, 620, 630, 640, and 650; and the following portions of Regulation 2: General prohibitions (all of page 1), Articles I and II, paragraphs A1, A2, A3, A4, 5, 7, and 8 of Article III, Articles IV to VII, and Appendix A.

(D) Previously approved and now deleted (without replacement) Rules 5, 6, 80, 87, and 95.

(E) Previously approved on August 2, 1978 and now deleted without replacement Rules 340, 510, and 620 to 650.

(xv) Mendocino County APCD.

(A) Rule 540.

(B) [Reserved]

(C) New or amended Rules 100, 110, 120, 130, 150, 160 (except 160(a) and non-criteria pollutants), 190, 300 (except paragraph (a)), 310, 340, 400(b), 410(b), 410(c), 430, 440, 460, 470, 480, 482, 500, 510, 520, 600, 610, 620, 630, 640, and 650; and the following portions of regulation 2: General prohibitions (all of page 1), Articles I and II, paragraphs A1, A2, A3, A4, 5, 7, and 8 of Article III, Articles IV and V, Article VI(a) to (i), Article VII, and Appendices B and C.

(D) Previously approved and now deleted (without replacement) Parts IV, V–5–B, VI–1, and VI–4.

(E) Previously approved on November 7, 1978 and now deleted without replacement Rules 510, 620, 640, and 650.

(F) Previously approved on November 7, 1978 in paragraph (c)(35)(xv)(C) of this section and now deleted without replacement, Rules 340.

(G) Previously approved on November 7, 1978 in paragraph (c)(35)(xv)(C) of this section and now deleted without replacement Rule 630.

(xvi) Northern Sonoma County APCD.

(A) Rule 540.

(B) New or amended Rules 100, 110, 120, 130, 150, 160, (except 160(a) and non-criteria pollutants), 190, 300, 310, 320, 340, 400(b), 410(a), 410(c), 420, 430, 440, 470, 480, 482, 500, 510, 520, 600, 610, 620,

630, 640, and 650; and the following portions of Regulation 2: General prohibitions (all of page 1), Articles I and II, paragraphs A1, A2, A3, A4, 5, 7, and 8 of Article III, Articles IV and V, paragraphs (a) to (i) of Article VI, and Article VII.

(C) Previously approved on August 16, 1978 and now deleted without replacement Rules 340, 510, 600, 610, 620, 630, 640, and 650.

(D) Previously approved on August 16, 1978 in paragraph (c)(35)(xvi)(B) of this section and now deleted without replacement, Rule 130.

(xvii) Trinity County APCD.

(A) Rule 540.

(B) [Reserved]

(C) New or amended Rules 100, 110, 120, 130, 150, 160 (except 160(a) and noncriteria pollutants), 190, 240(d) except paragraph (3)), 300, 310, 320, 340, 400(b), 410(a), 410(c), 420, 430, 440, 470, 480, 482, 500, 510, 520, 600, 610, 620, 630, 640, and 650; and the following portions of regulation 2: General prohibitions (all of page 1), articles I and II, paragraphs A1, A2, A3, A4, 5, 7 and 8 of article III, articles IV and V, paragraphs (a) to (i) of article VI, and article VII.

(D) Previously approved on August 2, 1978 and now deleted without replacement Rules 340, 510, and 620 to 650.

(36) Revised regulations for the following APCD were submitted on November 19, 1976, by the Governor's designee.

(i) Southern California APCD.

(A) Rules 213, 213.1, and 213.2.

(B) Previously approved on November 9, 1978 and now deleted without replacement Rule 213, 213.1, and 213.2.

(37) Revised regulations for the following APCD's submitted on February 10, 1977, by the Governor's designee.

(i) Southern California APCD.

(A) New or amended Rules 102, 468, 469, 474, 475, 476.

(B) Rule 430.

(C) Amended Rule 431.

(ii) San Diego County APCD.

(A) Rule 68.

(iii) San Luis Obispo County APCD.

(A) Rule 112, and Rules 404(A) through 404(B)(1)(a), 404(B)(1)(c), 404(B)(2), 404(B)(3), 404(B)(4), 404(c), 404(D), and 404(E).

(iv) Lake County APCD.

(A) Rules 500, 510, and 511.

(B) New or amended sections 100, 200 to 205.1, 207 to 234, 236, 238 to 260, 300, 301, 400, 401, 402 (A to E, and G), 410, 411, 412 (A and C), 430 to 439, 520, 530 to 533, 800, 900 to 902, 1000 to 1003, 1100, 1200, 1300, 1400, 1500, 1600, 1601, 1610, 1611, 1612, 1620, 1700, 1701, 1710 to 1714, 1720 to 1725, 1730, 1731 to 1736, and tables I, II, III, IV, and V.

(C) Previously approved and now deleted (without replacement) part II; sections 9, 15, 18, 28, 42, 43, 49a, 49b, 50, 52, and 54 of part III; sections 1 to 4 of part IV; section (1)(B) of part V; and parts IV and VI of Appendix B.

(D) Previously approved on August 4, 1978 and now deleted without replacement Rules 300, 800, 1600, 1601, 1610 to 1612, 1620, 1700 to 1701, 1710 to 1714, 1720 to 1725, 1730 to 1736, and Tables I to V.

(E) Previously approved on August 4, 1978 in paragraph (c)(37)(iv)(B) of this section and now deleted without replacement, Rules 531, 901, and 1500.

(v) Tuolumne County APCD.

(A) Rule 404.

(B) New or amended Rules 102, 202, 203, 206, 207, 208, 209, 213, 215, 216, 217, 301, 302, 303, 304, 308, 319, 321, 322, 323, 324, 402, 407, 409, 601, 602, 603, 604, 605, 700, 701, 702, 703, 704, 705, 706, 707, 708, 709, 710, 711, 712, 713, 714, 715, 716, and 717 and rescinded Rules 413 and 414.

(C) Previously approved on December 6, 1979 and now deleted without replacement Rules 601 to 605, 700 to 704, and 705 to 716.

(D) Previously approved on December 6, 1979 in paragraph (c)(37)(v)(B) of this section and now deleted without replacement, Rules 216, 323, and 324.

(E) Previously approved on December 6, 1979 in paragraph (c)(37)(v)(B) of this section and now deleted without replacement Rule 717.

(38) Revisions to air pollution emergency episode plans submitted on June 1, 1977 by the Governor's designee.

(i) South Coast Air Quality Management District's Regulation VII Emergencies as revised on May 6, 1977. No action has been taken on those portions of Rules 702, 703, 704, 706, 708, 708.2, 710, 711, 712 and 714 that pertain to sulfate, oxidant in combination with sulfate, or oxidant in combination with sulfur dioxide. No action has been taken on Rules 708.2(b)(3)(B),

708.2(b)(4)(B), 708.2(b)(4)(C) and 708.2(b)(5)(C).

(39) Revised regulations for the following APCDs submitted on June 6, 1977, by the Governor's designee.

(i) Great Basin Unified APCD.

(A) Rule 403.

(ii) San Bernardino County APCD (Southeast Desert portion).

(A) Rule 430.

(B) Rules 201–207, 209–212, 213, 213.1, 213.2, 214–217, and 219.

(C) New or amended Rules 104, 106, 208, 218, 401, 403, 53–A(a), 407 to 409, 431, 432, 441 to 443, 464 to 470, 472, 473, 475, 476, 503 to 508, 510 to 518, 801 to 817.

(D) [Reserved]

(E) Rules 703, 704 (except those portions that pertain to the criteria levels for carbon monoxide and sulfur dioxide), 705, 706, 707, 708, 709, 710, 711, 713, and 714.

(F) Previously approved on September 8, 1978 and now deleted without replacement Rules 503 to 508, 510 to 516, 518, and 801 to 817.

(G) Previously approved on September 8, 1978 and now deleted without replacement Rules 466 and 467.

(H) Previously approved on September 8, 1978 in paragraph (c)(39)(ii)(C) of this section and now deleted without replacement for implementation in the Mojave Desert Air Quality Management District, Rule 517.

(I) Previously approved on November 9, 1978 in paragraph (c)(39)(ii)(B) of this section and now deleted without replacement for implementation in the Mojave Desert Air Quality Management District, Rules 210, 211, and 214 to 216.

(J) Previously approved on November 9, 1978 in paragraph (c)(39)(ii)(B) of this section and now deleted without replacement: Rules 213, 213.1, and 213.2.

(iii) Los Angeles County APCD (Southeast Desert portion).

(A) Rule 430.

(B) Rules 201–207, 209–212, 213, 213.1, 213.2, 214–217, and 219.

(C) New or amended Rules 101, 102, 2, 103 to 106, 208, 218, 301, 42, 401, 403 to 405, 407 to 409, 431, 432, 441 to 444, 461, 463 to 476, 502 to 518, 801 to 817.

(D) Deleted without replacement Rule 53.1, and Regulation VI—Orchard or Citrus Grove Heaters.

(E) Rules 701, 702, 703, 704 (except those portions that pertain to the criteria levels for carbon monoxide and sulfur dioxide), 705, 706, 707, 708, 709, 710, 711, 712, 713, 714, and 715.

(F) Previously approved on September 8, 1978 and now deleted without replacement Rules 502 to 516, 518, and 801 to 817.

(G) Previously approved on September 8, 1978 in paragraph (c)(39)(iii)(C) of this section and now deleted without replacement, Rules 42 and 105.

(iv) Riverside County APCD (Southeast Desert portion).

(A) Rule 430.

(B) Rules 201–207, 209–212, 213, 213.1, 213.2, 214–217 and 219.

(C) New or amended Rules 103, 104, 208, 218, 301, 42, 401, 403 to 405, 53, 56, 407 to 409, 431, 432, 441 to 444, 463 to 476, 73, 503 to 518, 801 to 817.

(D) Deleted without replacement Regulation V—Orchard, Field or Citrus Grove Heaters.

(E) Rules 702, 703, 704 (except those portions that pertain to the criteria levels for carbon monoxide and sulfur dioxide), 705, 706, 707, 708, 709, 710, 711, 712, 713, 714, and 715.

(F) Previously approved on September 8, 1978 and now deleted without replacement Rules 503 to 516, 518, and 801 to 817.

(G) Previously approved on September 8, 1978 in paragraph (c)(39)(iv)(C) of this section and now deleted without replacement, Rules 42 and 301.

(H) Previously approved on November 9, 1978 in paragraph (c)(39)(iv)(B) of this section and now deleted without replacement for implementation in the Mojave Desert Air Quality Management District, Rules 210, 211, and 214 to 216.

(I) Previously approved on September 8, 1978 in paragraph (c)(39)(iv)(C) of this section and now deleted without replacement for implementation in the Mojave Desert Air Quality Management District, Rule 517.

(J) Previously approved on November 9, 1978 in paragraph (c)(39)(iv)(B) of this section and now deleted without replacement: Rules 213, 213.1, and 213.2.

(v) Yolo-Solano APCD.

(A) Amended Rule 2.21.

(vi) South Coast Air Quality Management District.

(A) Amended Rule 461.

(B) Amended Rule 431.

(vii) Mariposa County APCD.

(A) New or amended Rules 102(B), 102(E), 102(S), 102(II), 102(SS), 203 (with the exception of (D)), 206(B), 207, 208, 211, 215, 216, 301, 302, 303, 304, 308, 319, 320, 321, 322, 324, 402, 404, 407, 507, 514, 600, 603, and 610.

(B) Previously approved and now deleted (without replacement) Rule 203(k).

(C) Previously approved on June 6, 1977 and now deleted without replacement Rules 600, 603, and 610.

(D) Previously approved on August 16, 1978 in paragraph (c)(39)(vii)(A) of this section and now deleted without replacement, Rules 216 and 402.

(E) Previously approved on August 16, 1978 in paragraph (c)(39)(vii)(A) of this section and now deleted without replacement Rule 514.

(viii) Sierra County APCD.

(A) New or amended Rules 102(B), 102(E), 102(S), 102(II), 102(SS), 203 (with the exception of (D) and (G)), 206(B), 207, 208, 211, 215, 216, 301, 302, 303, 308, 319, 320, 321, 322, 324, 402, 404, 407, 409, 507, 514, 516, 600 to 617.

(B) Previously approved and now deleted (without replacement) Rules 203(j) and 620.

(C) Previously approved on September 14, 1978 and now deleted without replacement Rules 601 to 602, 604 to 609, and 611.

(D) Previously approved and now deleted, Rule 102.

(E) Previously approved on September 14, 1978 in paragraph (c)(39)(viii)(A) of this section and now deleted without replacement Rules 600, 612, 613, 614, 615, 616, and 617.

(ix) Plumas County APCD.

(A) New or amended Rules 102(B), 102(E), 102(S), 102(II), 102(SS), 203 (with the exception of (D) and (G)), 206(B), 207, 208, 211, 215, 216, 301, 302, 303, 304, 307, 308, 319, 320, 321, 322, 324, 402, 404, 407, 409, 507, 514, 602 to 605, 700, 703, and 710.

(B) Previously approved on September 14, 1978 and now deleted without replacement Rules 602 to 605, 700, and 710.

(C) Previously approved and now deleted, Rule 102.

(x) Nevada County APCD.

(A) New or amended Rules 102(B), 102(E), 102(S), 102(II), 102(SS), 103, 104, 203(e and i), 206(B), 207, 216, 304, 319, 320, 321, 402, 407, 409, 507, 514, 700, 703(E and I), 704, 710 and 711(A).

(B) Previously approved on September 14, 1978 and now deleted without replacement Rules 704, 710, and 711(A).

(C) Previously approved and now deleted, Rule 102.

(D) Previously approved on September 14, 1978 in paragraph (c)(39)(x)(A) of this section and now deleted without replacement, Rule 402.

(E) Previously approved on September 14, 1978 in paragraph (c)(39)(x)(A) of this section and now deleted without replacement Rule 514.

(40) [Reserved]

(41) Revised regulations for the following APCD's submitted on October 13, 1977, by the Governor's designee.

(i) Kings County APCD.

(A) New or amended Rules 412 and 412.2.

(ii) San Diego County Air Pollution Control District.

(A) New or amended Rules 2(b), 2(t), 2(u), 2(v), 2(w), 3, 19.2, 40, 42, 50, 52, 53, 54, 61.5, 64, 65, 66, 68, 71, 76, 77, 85, 95, 96, 101(f), 102(d), 102(e), 103(d), 103(g), 104, 109, and 177.

(*1*) Rule 65 is now removed without replacement as of March 14, 1989.

(B) Previously approved and now deleted (without replacement) Rule 113.

(C) Regulation VIII, Rules 126–138 and Appendix A, except as these rules apply to the 12-hour carbon monoxide episode criteria specified in Rule 127.

(D) Previously approved on August 31, 1978 and now deleted without replacement Rules 77, 85, and 96.

(E) Previously approved on August 31, 1978 and now deleted without replacement Rule 3.

(F) Previously approved on August 31, 1978 in paragraph (c)(41)(ii)(A) of this section and now deleted Rule 104 (now replaced by Rule 101).

(iii) Bay Area APCD.

(A) New or amended rules: Regulation 1, section 3121 and Regulation 2, sections 3210.5 to 3210.11.

(iv) Ventura County APCD.

(A) New Rule 105.

(v) Kern County APCD.

(A) Rule 108.

(vi) San Luis Obispo County APCD.

(A) New Rule 113.

(vii) Monterey Bay Unified APCD.

(A) New Rules 215, 422.

(viii) Amador County APCD.

(A) New or amended Rules 102(C), 102(F), 102(AW), 103, 205(A)(1), 207, 212, 216, 302(A), 304, 305(C), 313(A), 507, 602.1, 604, 605, 701, 703(E) and 710.

(ix) Calaveras County APCD.

(A) New or amended Rules 102, 203 (with the exception of (D) and (G)), 206(B), 207, 208, 209, 211, 215, 216, 217, 301, 302, 303, 304, 319, 320, 321, 322, 323, 324, 402, 404, 407, 507, 602 to 604, 700, 702, 703, 710, and 715.

(B) Previously approved and now deleted (without replacement) Rule 203(J).

(C) Previously approved on November 7, 1978 and now deleted without replacement Rules 700, 702, 703, 710, 715.

(D) Previously approved on November 7, 1978 in paragraph (c)(41)(ix)(A) of this section and now deleted without replacement, Rules 216, 324, 402, 602, 603, and 604.

(x) Placer County APCD.

(A) New or amended Rules 101, 102, 103, 104, 203 (with the exception of (G)), 206, 207, 208, 210, 211, 213, 214, 301 to 311, 313 to 322, 401, 402, 404, 407, 408, 409, 507, 603 to 605, 702 to 704, 706, 708, 709, 710, 715, 801 to 804.

(B) Previously approved on November 15, 1978 and now deleted without replacement Rules 703, 704, 708 to 710, and 715 (Mountain Counties Air Basin).

(C) Previously approved on November 15, 1978 and now deleted without replacement Rules 603 to 605, 702 to 704, 706, 708 to 710, and 715 (Lake Tahoe Air Basin).

(D) Previously approved on November 15, 1978 in paragraph (c)(41)(x)(A) of this section and now deleted without replacement, Rule 402.

(E) Previously approved on November 15, 1978 in paragraph (c)(41)(x)(A) of this section and now deleted without replacement, Rules 801 to 804 (Lake Tahoe Air Basin).

(F) Previously approved on November 15, 1978 in paragraph (c)(41)(x)(A) of this section and now deleted without replacement, Rules 801, 802, 803 (paragraphs B and C), and 804 (Mountain Counties Air Basin).

(G) Previously approved on November 15, 1978 in paragraph (c)(41)(x)(A) of this section and now deleted without replacement, Rules 603, 604, 605, and 801 to 804 (Sacramento Valley Air Basin).

(H) Previously approved on November 15, 1978 in paragraph (c)(41)(x)(A) of this section and now deleted without replacement Rule 706 (Mountain Counties Air Basin).

(I) Previously approved on November 15, 1978 in paragraph (c)(41)(x)(A) of this section and now deleted without replacement Rules 702 to 704, 706, 708 to 710, and 715 (Sacramento Valley Air Basin).

(J) Previously approved on November 15, 1978 in paragraph (c)(41)(x)(A) of this section and now deleted with replacement in paragraph (c)(497)(i)(B)(*1*) of this section, Rule 206.

(xi) Tulare County APCD.

(A) New or amended Rules 108 and 412.1

(xii) Shasta County APCD.

(A) New or amended Rules 1:2 (with the exception of the definition of ''person''); 2:6(1)(a), (1)(b), (i–ii), (1)(b)(iii), (a, b, and d), (1)(b), (iv–vii), (1)(c), (i–vi and viii), (1) (d and e), (2) (a–d and f), (3) (a–c and e–g), (4) (a–c and e–i), (5) (b–d); 2:7, 2:8; 3:2 (except part VI and VII of table II, and explanatory notes 6 and 7); 3:4, 4:1, 4:5, 4:6, 4:14, and 4:19.

(B) Previously approved on November 14, 1978 and now deleted without replacement Rules 4.5 and 4.6.

(xiii) Madera County APCD.

(A) Amended Rule 412.1.

(xiv) South Coast Air Quality Management District.

(A) New or amended Rules 101 and 102 (except for the definition of ''agricultural burning'').

(xv) Northern Sonoma County APCD.

(A) New or amended Rules 420(e) and (f), and 455(a) and (d).

(42) Revised regulations for the following APCD's submitted on November 4, 1977 by the Governor's designee.

(i) Imperial County APCD.

(A) New or amended Rules 100 to 110, 113 to 115, 301 to 303, 305, 401, 403 to 406, 408, 409, 411 to 416, 419 to 422, 501 to 516, and 701 to 706.

(B) Previously approved and now deleted (without replacement), Rules 106B, 113, 126, 131 and 147.

(C) Rules 601, 602 (except those portions that pertain to the criteria levels for carbon monoxide and sulfur dioxide), 603, 604, 605, 606, 607, 608, 609, 610, 611, 612, 613, and 614.

(D) New Rule 417 (A–H, and J).

(E) Previously approved on August 11, 1978 and now deleted without replacement Rules 501 to 512 and 514 to 516.

(F) Previously approved on August 11, 1978 in paragraph (c)(42)(i)(A) of this section and now deleted without replacement, Rules 104, 106, and 303.

(ii) Sacramento County APCD.

(A) Rules 3, 7(a) to 7(b)(2), 7b(4) to 7(d), 9, 11, 12, 13, 14, 15, 21, 22a, 23, 24, 25, 26, 94, 95, 96, 97, and 98.

(B) Rules 120, 121, 122, 125, and 126, except those portions that pertain to the 12-hour CO criteria level.

(iii) Kings County APCD.

(A) New or amended Rules 102, 103, 103.1, 104, 105, 108, 108.1, 110, 111, 112, 113, 401, 402(a) to 402(d), 402(f), 402(g), 404, 404.1, 405, 405.1, 405.2, 405.3, 406, 407.1, 409, 410, 416.1, 417, 417.1, 418, 421, and 501.

(B) Previously approved and now deleted, Rule 405.1.

(C) Previously approved on August 4, 1978 and now deleted without replacement Rules 105 and 501.

(D) Previously approved on August 4, 1978 in paragraph (c)(42)(iii)(A) of this section and now deleted without replacement, Rules 104 and 110.

(iv) Stanislaus County APCD.

(A) New or amended Rules 103.1, 108, 411.1.

(v) Merced County APCD.

(A) Amended Rules 411(b) and 411.1.

(vi) Kern County APCD.

(A) Rule 412.1.

(vii) San Luis Obispo County APCD.

(A) New or amended Rules 105(A)(1), 407, 501(A)(7), 502(A)(3).

(viii) Glenn County APCD.

(A) New or amended Rules 82, 152, and 154.

(B) Previously approved on September 14, 1978 in paragraph (c)(42)(viii)(A) of this section and now deleted without replacement, Rules 152 and 154.

(ix) Great Basin Unified APCD.

(A) New or amended Rules 300, 423, and 617.

(B) Previously approved and now deleted (without replacement) Rules 411 and 418.

(x) El Dorado County APCD.

(A) New or amended Rules 102, 201, 203 [with the exception of (G)], 206(B), 207, 208, 215, 216, 217, 217–49 to 217–50, 217–51(A to D), 217–53 to 217–56, 217–1 to 217–3, 302, 303, 304, 307, 308, 319, 320, 321, 322, 324, 402, 407, 409, 507, 700, 703 and 710.

(B) Previously approved on November 6, 1978 in paragraph (c)(42)(x)(A) of this section and now deleted Rule 102.

(C) Previously approved on November 6, 1978 in paragraph (c)(42)(x)(A) of this section and now deleted without replacement, Rules 216, 324, and 402.

(D) Previously approved on November 6, 1978 in paragraph (c)(42)(x)(A) of this section and now deleted without replacement Rules 700, 703, and 710.

(xi) Fresno County APCD.

(A) New or amended Rules 411.1 and 416.1(g).

(xii) San Joaquin County APCD.

(A) New or amended Rules 108 and 411.2.

(xiii) San Bernardino County Desert APCD.

(A) New or amended Rules 101, 102, 103, 105, 404, 405, 406(a), 444, 461, 462, 463, 471, 474, 501, 502 and 509.

(B) Previously approved and now deleted without replacement Rules 44 and 53.1.

(C) Rules 701, 702, 712, and 715.

(D) Previously approved on December 21, 1978 and now deleted without replacement Rules 501, 502, and 509.

(xiv) Riverside County APCD.

(A) New or amended Rules 101, 102, 105, 461, and 501.

(B) Rule 701.

(C) Previously approved on December 21, 1978 and now deleted without replacement Rule 501.

(D) Previously approved on December 21, 1978 in paragraph (c)(42)(xiv)(A) of this section and now deleted without replacement, Rule 105 (Mojave Desert AQMD only).

(xv) Del Norte County APCD.

(A) New or amended Rules 240(e), 420 (e) and (f), and 455 (a) and (d), and Appendix D to regulation 1.

(xvi) South Coast Air Quality Management District.

(A) New or amended Rules 218, 463, and 466.

(B) Rules 702 (map only) and 708.2.

(C) Rules 714 and 715.1 (except those portions that pertain to sulfate, oxidant in combination with sulfate, and oxidant in combination with sulfur dioxide).

(xvii) Humboldt County APCD.

(A) New or amended Rules 240(e), 420 (e) and (f), and 455 (a) and (d), and Appendix D to Regulation 1.

(xviii) Santa Barbara County APCD.

(A) New Rule 39.3.

(xix) Mendocino County APCD.

(A) New or amended Rules 240(e), 420 (e) and (f), and 455 (a) and (d), and Appendix D to Regulation 1.

(xx) Trinity County APCD.

(A) New or amended Rules 240(e), 420 (e) and (f), and 455 (a) and (d), and Appendix D to Regulation 1.

(xxi) Northern Sonoma County APCD.

(A) New or amended Rules 240(e), 310, and Appendix D to Regulation 1.

(B) Previously approved on December 21, 1978 in paragraph (c)(42)(xxi)(A) of this section and now deleted with replacement in paragraph (c)(164)(i)(B)(*4*) of this section, Rule 240(e).

(xxii) Monterey Bay Unified APCD.

(A) Regulation VII, Rules 700–713.

(43) [Reserved]

(44) Revised regulations for the following APCD's submitted on June 22, 1978, by the Governor's designee.

(i) Great Basin Unified APCD.

(A) Amended Rule 419.

(ii) Santa Barbara County APCD.

(A) New Rule 24.15.

(iii) Ventura County APCD.

(A) New or amended Rules 2, 7, and 56 (with the exception of Sections B(2)(c) and C).

(iv) Yolo-Solano APCD.

(A) Amended Rules 1.2 (preamble), 1.4, 2.8(c)(2), 2.13(h)(4), 2.15, 2.17, 2.20, 4.4(b), 5.1, 5.4(e)(1), 5.10, 5.11, and 6.7(f).

(B) Previously approved and now deleted (without replacement) Rule 2.8(b)(4).

(C) Previously approved on January 29, 1979 and now deleted without replacement Rules 5.1, 5.10 and 5.11.

(D) Previously approved on January 29, 1979 in paragraph (c)(44)(iv)(A) of this section and now deleted without replacement, Rule 1.4.

(v) South Coast Air Quality Management District.

(A) Rules 102, 501.1, and 503.

(B) Previously approved on March 28, 1979, and now deleted without replacement Rule 503.

(vi) San Diego County APCD.

(A) New or amended Rules 66, 67.0, and 67.1.

(45) Revised regulations for the following APCD's submitted on July 13, 1978 by the Governor's designee.

(i) Bay Area APCD.

(A) New or amended Regulation 2, Division 3, sections 3210.11(B), 3211.2; Regulation 3, Division 3, §3102.1; Regulation 9.

(ii) South Coast AQMD.

(A) Rules 302, 461, 465, 1102, and 1113.

(iii) San Diego County APCD.

(A) New or amended Rules 42, 76, and 97.

(B) Previously approved on July 30, 1979 and now deleted without replacement Rules 76 and 97.

(46) The following Administrative Chapters of the California SIP, submitted on December 29, 1978, by the Governor's designee.

(i) Chapter 2—Statewide Perspective.

(ii) Chapter 20—Compliance.

(iii) Chapter 23—Source Surveillance.

(iv) Chapter 24—Resources.

(v) Chapter 25—Intergovernmental Relations.

(47) Revised regulations for the following APCD's submitted on January 2, 1979 by the Governor's designee.

(i) South Coast AQMD.

(A) New or amended Rules 301, 303, 708.3, 1201–1206, 1209–1211, 1214, 1217, 1220–1221, 1223–1224 and 1231.

(B) New or amended Rules 462, 481, and 1104.

(C) Previously approved on May 9, 1980 and now deleted without replacement for implementation in the Antelope Valley Air Pollution Control District Rules 1201–1205, 1209–1211, 1214, 1217, 1220–1221, and 1223–1224.

(D) Previously approved on May 9, 1980 and now deleted without replacement for implementation in the South Coast Air Quality Management District, Rule 1231. (JR)

(E) Previously approved on May 9, 1980 in paragraph (c)(47)(i)(A) of this

section and now deleted without replacement for implementation in the Antelope Valley Air Pollution Control District Rule 1231.

(F) Previously approved on May 9, 1980 in paragraph (c)(47)(i)(A) of this section and now deleted without replacement for implementation in the Mojave Desert Air Quality Management District (Riverside County), Rules 1201 to 1205, 1209 to 1211, 1214, 1217, 1220, 1221, 1223, and 1224.

(G) Previously approved on May 9, 1980 in paragraph (c)(47)(i)(A) of this section and now deleted without replacement for implementation in the South Coast Air Quality Management District, Rules 1201 to 1205, 1209 to 1211, 1214, 1217, 1220, 1221, 1223, and 1224.

(ii) Fresno County APCD.

(A) New or amended Rules 110, 416.1, and 519.

(B) New or amended Rule 409.1.

(iii) Kern County APCD.

(A) New or amended Rules 111, 301, and 519.

(B) Rule 412.

(iv) Lake County APCD.

(A) New or amended Rules 435, and 436, and Tables V and VI.

(v) Monterey Bay Unified APCD.

(A) Amended Rule 301.

(vi) Siskiyou County APCD.

(A) Amended Rule 4.3.

(vii) San Luis Obispo County APCD.

(A) Rule 407.

(B) New or amended Rule 201.

(48) Chapter 3—Legal Authority of the California SIP, submitted on March 16, 1979, by the Governor's designee.

(49) Addendum to Chapter 23 of the California SIP submitted on March 29, 1979, by the Governor's designee.

(50) Revised regulations for the following APCD's submitted on May 7, 1979, by the Governor's designee.

(i) Del Norte County APCD.

(A) New or amended Rules 240, 410 (a) and (c), and 615.

(B) Previously approved on October 31, 1980 and now deleted without replacement Rule 615.

(ii) Humboldt County APCD.

(A) New or amended Rules 240, 410 (a) and (c), 615.

(B) Previously approved on October 31, 1980 and now deleted without replacement Rule 615.

(iii) Mendocino County APCD.

(A) New or amended Rules 240, 410, and 615.

(B) Previously approved on October 31, 1980 and now deleted without replacement Rule 615.

(iv) Trinity County APCD.

(A) New or amended Rules 240, 410 (a) and (c), and 615.

(B) Previously approved on October 31, 1980 and now deleted without replacement Rule 615.

(v) Northern Sonoma County APCD.

(A) New or amended Rules 240, 300, 310, 320, 410 (a) and (c), 420, 540, 615.

(B) Previously approved on October 31, 1980 and now deleted without replacement Rules 320 and 615.

(C) Previously approved on October 31, 1980 in paragraph (c)(50)(v)(A) of this section and now deleted with replacement in paragraph (c)(164)(i)(B)(*4*) of this section, Rule 240.

(vi) Merced County APCD.

(A) New or amended Rule 409.1.

(B) New or amended Rule 519.

(vii) Modoc County APCD.

(A) New or amended Rules 1:2 w, 2:11, 2:15, 3:3 and 3:4.

(viii) Monterey Bay Unified APCD.

(A) Rules 403 and 602.

(ix) Ventura County APCD.

(A) New or amended Rules 71 and 71.3.

(B) New or amended Rule 11.

(x) San Diego County APCD.

(A) New or amended Rule 10(h) and deletion of Rule 43.

(51) Revised regulations for the following APCD's submitted May 23, 1979, by the Governor's designee.

(i) Kern County APCD.

(A) Amended Rules 305 and 503.

(B) Rules 410.1 and 424.

(C) Previously approved on August 11, 1980 and now deleted without replacement Rule 503 (including Southeast Desert).

(ii) Monterey Bay Unified APCD.

(A) Rule 417.

(B) Rule 617.

(iii) Del Norte County APCD.

(A) New or amended Rules 130, 300, 310, 320, 420, 540 and Regulation 1/Appendix D.

(B) Previously approved on October 31, 1980 and now deleted without replacement Rule 320.

(iv) Humboldt County APCD.

(A) New or amended Rules 130, 300, 310, 320, 420, 540 and Regulation 1/Appendix D.

(B) Previously approved on October 31, 1980 and now deleted without replacement Rule 320.

(v) Mendocino County APCD.

(A) New or amended Rules 130, 300, 310, 320, 420, 540 and Regulation 1/Appendix D.

(B) Previously approved on October 31, 1980 and now deleted without replacement Rule 320.

(vi) Trinity County APCD.

(A) New or amended Rules 130, 300, 310, 320, 420, 540 and Regulation 1/Appendix D.

(B) Previously approved on October 31, 1980 and now deleted without replacement Rule 320.

(vii) San Diego County APCD.

(A) Amended Rules 2(t), 61.5, and 61.7.

(B) New or amended Rules 19.2(d)(4), 50, 62(a), 66(P) and (W), 95, and 98.

(C) New or amended Rule 11.

(D) Previously approved on September 28, 1981 and now deleted without replacement Rules 95 and 98.

(viii) San Joaquin County APCD.

(A) New or amended Rule 409.1.

(B) New or amended Rules 110 (a), (b), and (d)–(i), 301, 303–311, and 511.

(C) New or amended Rules 102, 108.2, 110(c), 302, 401, and 521.

(D) Previously approved on December 9, 1981 and now deleted without replacement Rules 301, 303 to 311, and 511.

(E) Previously approved on June 18, 1982 and now deleted without replacement Rule 302.

(ix) Stanislaus County APCD.

(A) New or amended Rule 409.1.

(B) New or amended Rule 110 (A), (B) and (D)–(I).

(C) New or amended Rules 110(c) and 519.

(D) Previously approved on June 18, 1982 and now deleted without replacement Rule 519.

(x) Tulare County APCD.

(A) New or amended Rules 410.1 and 413.

(B) New or amended Rules 111 (a), (b), and (d)–(i), 402, and 417.

(C) New or amended Rules 108, 111(c), 201, 410 and 519.

(xi) Lake County APCD.

(A) New Rules 227.1, 254.1, and 660.

(B) Previously approved on January 27, 1981 in paragraph (c)(51)(xi)(A) of this section and now deleted without replacement, Rule 660.

(xii) San Bernardino County Desert APCD.

(A) New Rules 480 and 501.1.

(B) New or amended Rules 442, 463, and 1113.

(C) Previously approved on January 27, 1981 and now deleted without replacement Rule 501.1.

(xiii) Santa Barbara County APCD.

(A) New or amended Rules 101, 102, 103, 104, 201(A, B, D, E, F, and G), 202, 203, 204, 205(A and B), 206, 207, 208, 209, 210, 211, 301, 302, 304, 305, 306, 307, 308, 309, 311, 312, 313, 314, 315, 317, 319, 322, 324, 328, 401, 402, 403, 501, 502, 503, 504, 505, 505–A, 506, 507, 508, 509, 510, 511, 512, 513, 514, 515, 516, 517, 518, 519, 601, 602, 603, 604, 605, 606, 607, 608, 609, and 610.

(B) Previously approved on May 18, 1981 and now deleted without replacement Rules 210 to 211, 501 to 504, 506 to 512, 514 to 516, and 518.

(C) Previously approved on May 18, 1981 in paragraph (c)(51)(xiii)(A) of this section and now deleted without replacement, Rule 402.

(D) Previously approved on May 18, 1981 in paragraph (c)(51)(xiii)(A) of this section and now deleted without replacement Rules 204, 207, 208, 209, 513, 517, and 519.

(E) Previously approved on May 18, 1981 in paragraph (c)(51)(xiii)(A) of this section and now deleted with replacement in paragraph (c)(187)(i)(E)(*1*) of this section, Rule 206.

(F) Previously approved on May 18, 1981 in paragraph (c)(51)(xiii)(A) of this section and now deleted with replacement in paragraph (c)(254)(i)(C) of this section, Rules 203 and 204.

(G) Previously approved on May 18, 1981 in paragraph (c)(51)(xiii)(A) of this section and now deleted with replacement in paragraph (c)(361)(i)(A)(*4*) of this section, Rule 201.

(xiv) El Dorado County APCD—Lake Tahoe Air Basin Portion.

(A) New or amended Rules 101, 102 (except LAER, stationary source, modification definitions), 103, 104, 201–203, 206A–212, 217, 301–305, 307–310, 312–321, 404, 702–704, 706–710, and 801–804. Deleted Rules 59(g)(1), 102I, 102S, 102BB, 102FF, 102GG, 102LL, 102RR, 208, 214, 601, 602, and 700.

(B) Amended Rule 306.

(C) New or amended Rules 102, LAER, stationary source, and modifications; 213; and 214.

(D) Previously approved on May 18, 1981 in paragraph (c)(51)(xiv)(A) of this section and now deleted without replacement, Rules 801 to 804.

(E) Previously approved on May 18, 1981 in paragraph (c)(51)(xiv)(A) of this section and now deleted without replacement Rules 702 to 704 and 707 to 710.

(xv) Placer County APCD—Mountain Counties Air Basin Portion.

(A) New or amended Rules 404, 602, and 603.

(B) Deletion of Rules 604 and 605.

(C) Previously approved on May 18, 1981 and now deleted without replacement Rules 404, 602, and 603.

(xvi) Sacramento County APCD.

(A) Amended Rule 71.

(B) Previously approved on January 26, 1982 and now deleted without replacement Rule 71.

(xvii) Shasta County APCD.

(A) Amended Rule 3.4.

(xviii) Sierra County APCD. (A) New or amended Rules 207, 210, 211, 218 and 618.

(B) Previously approved on January 25, 1982 in paragraph (c)(51)(xviii)(A) of this section and now deleted without replacement, Rule 618.

(xix) Tehama County APCD.

(A) Amended Rule 2.1 and previously approved and now deleted Rule 2.9 (Action on Applications).

(xx) Ventura County APCD.

(A) New or amended Rules 6, 8, 9, 13, 24, 40, 63, 75, 102, 103, 110, 111, 112, 113, 114, 120, 121, 123, 124, 125, 126, 127, and 130.

(B) Previously approved on June 18, 1982 and now deleted without replacement Rules 40, 110 to 114, 120 to 121, 123 to 126, and 130.

(C) Previously approved on June 18, 1982 in paragraph (c)(51)(xx)(A) of this section and now deleted without replacement, Rule 9.

(D) Previously approved on June 18, 1982 in paragraph (c)(51)(xx)(A) of this section and now deleted without replacement Rules 8 and 127.

(52) Revised regulations for the following APCD's submitted October 15, 1979, by the Governor's designee.

(i) Kern County APCD.

(A) Amended Rule 302

(B) Rules 410.4, 410.5, and 414.2.

(C) Previously approved on August 21, 1981 and now deleted without replacement for implementation in the Southeast Desert Air Basin, Rule 414.2.

(D) Previously approved on August 21, 1981 in paragraph (c)(52)(i)(A) of this section and now deleted without replacement within the San Joaquin Valley Unified Air Pollution Control District area, Rule 414.2.

(ii) Imperial County APCD.

(A) Rules 415.1 and 424.

(B) New or amended Rules 101 L, 110, 201B, 301, 302, 304, 306, 401, 404, 406, 408, 410, 417 I, 418, 419, 422, Regulation VI, 701, 702, 703 (deletion), 705, and 706.

(C) Previously approved on January 27, 1981 in paragraph (c)(52)(ii)(B) of this section and now deleted without replacement, Rules 304 and 706.

(iii) [Reserved]

(iv) Kings County APCD.

(A) New or amended Rules 210.1 (except paragraphs (3)(D) and (5)(B)(8)), 210.2, 410.1, 410.2, 410.3, 410.5, 412.1, 413, 414.1, and 414.2.

(B) New or amended Rules 111 (A), (B), and (D)–(I), 301, 302, and 401.

(C) New or amended Rules 111(c), and 519.

(D) Previously approved on October 9, 1981 and now deleted without replacement Rule 302.

(E) Previously approved on June 18, 1982 and now deleted without replacement Rule 519.

(F) Previously approved on December 9, 1981 in paragraph (c)(52)(iv)(B) of this section and now deleted without replacement, Rule 301.

(G) Previously approved on May 7, 1982 in paragraph (c)(52)(iv)(A) of this section and now deleted without replacement: Rule 414.2.

(v) Madera County APCD.

(A) New or amended Rules 210.2, 410.1, 410.3, 410.5, 411, and 412.

(B) New or amended Rules 102, 103, 103.1, 104, 105, 108, 108.1, 110, 115, 210.3, 301, 305, 402(a)–(e), 409, 410, 416, 417, 418, 501, 504, 511, 601, 602, 603, 606–611, and 612.

(C) New or amended Rules 111(c) 402(f) and 519.

(vi) Merced County APCD.

(A) New or amended Rules 210.1 (except paragraphs (3)(D) and (5)(B)(8)), 210.2, 409.5, and 411.

(B) New or amended Rules 109 (A), (B), and (D)–(I).

(C) New or amended Rule 109(c).

(D) Previously approved on May 7, 1982 in paragraph (c)(52)(vii)(A) of this section and now deleted without replacement: Rules 413.2 and 413.3.

(vii) San Joaquin County APCD.

(A) New or amended Rules 209.1 (except paragraphs (B)(3) and (D)(2)(b)), 209.2, 409.3, 410, 411.1, 413, 413.1, 413.2, and 413.3.

(B) New or amended Rule 209.3.

(C) New or amended Rule 209.4.

(viii) Stanislaus County APCD.

(A) New or amended Rules 209.2 and 411.

(ix) Tulare County APCD.

(A) New or amended Rules 210.1 (except paragraphs (C)(4) and (e)(2)(H)), 210.2 and 410.5.

(B) New or amended Rules 301 and 302.

(C) Previously approved on December 9, 1981 and now deleted without replacement Rules 301 and 302.

(x) Lake County APCD.

(A) Amended Rule 433.

(xi) Amador County APCD.

(A) New or amended Rules 102, 103, 107, 203, 206B, 207, 209–211, 213, 215, 216, 301–313, 315–324, 401, 402, 404, 407, 409, Regulation VI, 700–704, 710, and 711.

(B) Previously approved on May 18, 1981 and now deleted without replacement Rules 605, 700 to 704, and 710 to 711.

(C) Previously approved on May 18, 1981 in paragraph (c)(52)(xi)(A) of this section and now deleted without replacement, Rules 103, 402, and 601 to 604.

(xii) Nevada County APCD.

(A) New or amended Rules 207, 210, 211, 218, 306, 307, and 404.

(B) Previously approved on May 18, 1981 and now deleted without replacement Rule 404.

(xiii) Placer County APCD—Mountain Counties Air Basin Portion.

(A) New or amended Rules 101, 102, 104, 201, 202, 207, 210, 211, 220–222, 301–310, and 312–323.

(B) New or amended Rules 215 and 219.

(C) Rule 508 (except paragraph (c)(3)(h)).

(D) New or amended Rules 501B, 502, 504, 506, 512, and 513.

(E) Previously approved and now deleted, Rule 104.

(F) Previously approved on May 18, 1981 in paragraph (c)(52)(xiii)(D) of this section and now deleted without replacement Rules 504, 506, 512, and 513.

(G) Previously approved on July 7, 1982 in paragraph (c)(52)(xiii)(C) of this section and now deleted without replacement: Rule 508.

(xiv) Tuolumne County APCD.

(A) New or amended Rules 207, 210, 218, and 404.

(xv) Fresno County APCD.

(A) New or amended Rules 210.1 [except paragraphs (3)(D) and (5)(B)(8)], 210.2, 409.5, 409, 409.3, 409.4, and 411.

(B) New or amended Rules 301, 302, and 305.

(C) Previously approved on December 9, 1981 and now deleted without replacement Rule 305.

(D) Previously approved on December 9, 1981 in paragraph (c)(52)(xv)(B) of this section and now deleted without replacement, Rule 302.

(xvi) Yuba County APCD.

(A) New or amended Rules 1, Section 1 (except Silviculture Deletion), 1.1 (except PPM), 2.0–2.2, 2.4 except (a), 2.5–2.12, 2.15–2.20, 2.22–2.24, 2.27, 2.30, Section 5 (Deletion), 5.0–5.3, 5.5–5.19, 6.1–6.7, 7, 7.1 and 8.1.

(B) New or amended Rules 2.3 and 2.4(a).

(C) Previously approved on January 26, 1982 in paragraph (c)(52)(xvi)(A) of this section and now deleted without replacement, Rules 7.0, 7.1, and 8.1.

(D) Previously approved on January 26, 1982 in paragraph (c)(52)(xvi)(A) of this section and now deleted without replacement Rules 5.0 to 5.3, 5.5 to 5.19, and 6.1 to 6.7.

(xvii) San Diego County APCD.

(A) New or amended Rule 67.7 and 67.2.

(xviii) Shasta County APCD.

(A) New or amended Rules 1.1, 1.2, 2.11, 2.12, and 3.2 (except rows (vi) and (vii)).

(B) Amended Rule 2:5.

(xix) Yolo—Solano APCD.

(A) New or amended Rules 4.1–4.3.

(B) New or amended Rules 301, 302, and 305.

(C) Previously approved on January 26, 1982 and now deleted without replacement Rule 4.3.

(xx) Sacramento County APCD.

(A) New or amended Rule 1.

(xxi) Siskiyou County APCD.

(A) New or amended Rules 2.14–2.16.

(53) Revisions to air pollution emergency episode plans submitted on February 14, 1980 by the Governor's designee.

(i) Bay Area Air Quality Management District Rules 100, 101, 300, 301, 302, 303, 304, 305, 400, 401, 402, 403, and 404.

(54) Revised regulations for the following APCD's submitted on February 25, 1980, by the Governor's designee.

(i) Ventura County APCD.

(A) Rules 150, 152, 153, 154, 155, 156, 157, 158, 159, 160, 161, and 162.

(B) New or amended Rule 71.1.

(C) New or amended Rules 56, 80, 81, and deletion of Rules 17, 151, 163, and 164.

(ii) Monterey Bay Unified APCD.

(A) Rule 422 and deletion of Rule 508.

(B) Amended Rule 416.

(iii) San Luis Obispo County APCD.

(A) Rules 301, 302, 303, and 304.

(B) Previously approved on May 18, 1981 and now deleted without replacement Rules 303 and 304.

(iv) Yolo—Solano APCD.

(A) Amended Rule 5.4.

(B) New or amended Rules 2.21, 2.21.1, 2.24 and 2.25.

(C) New or amended Rule 3.13.

(D) Previously approved on January 26, 1982 and now deleted without replacement Rule 5.4.

(v) Sacramento County APCD.

(A) New or amended Rule 17.

(B) [Reserved]

(C) New or amended Rules 3.13, 3.4.1, and 3.4.2.

(vi) Sutter County APCD.

(A) New or amended Rules 1.4, 2.8.1 (Deletion), 2.17, and 2.82.

(B) Previously approved on January 26, 1982 in paragraph (c)(54)(vi)(A) of this section and now deleted without replacement, Rule 1.4.

(vii) Yuba County APCD.

(A) Amended Rule 2.26.

(viii) Butte County APCD.

(A) New Rule 2–12.e.

(B) Amended Rules 4.5A and 4.5B.

(C) Previously approved on May 27, 1982 in paragraph (viii)(B) of this section and now deleted Rules 4.5A and 4.5B.

(ix) Tehama County APCD.

(A) Amended Rules 2.5A and 2.5B.

(x) Colusa County APCD.

(A) New or amended Rules 2.7 A and B.

(xi) Glenn County APCD.

(A) New or amended Rules 51.1 and 51.2.

(xii) Shasta County APCD.

(A) New or amended Rules 1:2 (Best Available Control Technology, Stationary Source and Precursor) and 2:1 A.

(55) The following material for Imperial County was submitted on October 11, 1979 by the Governor's designee.

(i) Summary of Plan Compliance with Clean Air Act Requirements.

(ii) Imperial County plan to attain National Ambient Air Quality Standards for oxidants, October 31, 1978.

(iii) SIP Revision—Imperial County ARB Staff Report, No. 79–4–2.

(iv) ARB resolution 79–9, February 21, 1979.

(v) Copies of Board hearing testimony.

(56) Revised regulations for the following APCDs submitted on March 17, 1980, by the Governor's designee.

(i) Imperial County APCD.

(A) Rules 207 [except Subparagraph C.4.], 208, and 209.

(B) Previously approved on November 10, 1980 in paragraph (c)(56)(i)(A) of this section and now deleted with replacement in paragraph (c)(490)(i)(A)(*1*) of this section: Rule 207 and Rule 209.

(ii) Ventura County APCD.

(A) Amended Rule 26.3.

(B) New or amended Rules 10, 25, and 27.

(C) Previously approved on June 18, 1982 and now deleted without replacement Rule 25.

(D) Previously approved on June 18, 1982 in paragraph (c)(56)(ii)(B) of this section and now deleted without replacement Rule 27.

(57) The *North Central Coast Air Basin Strategy* (Chapter 10 of the comprehensive revisions to the State of California Implementation Plan for the Attainment and Maintenance of Ambient Air

Quality Standards) submitted on September 12, 1979 by the Governor's designee.

(58) Revised regulations for the following APCDs submitted on December 17, 1979 by the Governor's designee.

(i) Monterey Bay Unified APCD.

(A) Rules 418, 425 and 426.

(B) New or amended Rules 300, 405, and 601.

(ii) South Coast AQMD.

(A) New or amended Rules 1107, 1108, 1108.1 and 1128.

(B) New or amended Rules 404, 442, 501.1, 502, 504.1(b), (c), and (d), and 1124.

(C) Previously approved on September 28, 1981 and now deleted without replacement Rule 501.1.

(iii) Great Basin Unified APCD.

(A) New or amended Rules 205, 210, 300A, and G, 403, 408, 419, and 617.

(B) New or amended Rules 203, 209–A and B, 212, and 213.

(C) Previously approved on June 18, 1982 in paragraph (c)(51)(iii)(B) of this section and now deleted without replacement Rule 203.

(iv) Ventura County APCD.

(A) New or amended Rule 74.3.

(v) Butte County APCD.

(A) New or amended Rules 2.12a, 2.12b, 2.12c, and 2.12d.

(vi) Shasta County APCD.

(A) New or amended Rules 1.2, 3.14, and 3.15.

(vii) Yolo—Solano APCD.

(A) Amended Rules 2.8 and 6.6.

(viii) San Luis Obispo County APCD.

(A) New or amended Rule 407.

(ix) Modoc County APCD.

(A) New or amended Rule 2:8–e.

(59) Revised regulations for the following APCD submitted on March 4, 1980 by the Governor's designee.

(i) Monterey Bay Unified APCD.

(A) Rules 207 (except B.4.) and 208.

(B) New or amended Rules 205, 211, 212, 213, and 214.

(60) Chapter 4, *California Air Quality Control Strategies*, of the California SIP, submitted on May 23, 1979, by the Governor's designee.

(61) Redesignation of AQCR's in California, submitted on September 11, 1978, by the Governor's designee.

(62) The *San Diego Air Basin Control Strategy* (Chapter 14 of the Comprehensive Revisions to the State of California Implementation Plan for the Attainment and Maintenance of Ambient Air Quality Standards) submitted on July 5, 1979, by the Governor's designee, except the inspection/maintenance portion. Additional documents were also submitted as appendices. Those portions of the *San Diego Air Basin Control Strategy*, including Appendices, identified by Table 14–1, ''Location of Plan Elements Which Meet Clean Air Act Requirements'' (pages 6–7), comprise the submitted nonattainment area plan, except the inspection/maintenance portion. The remaining portions are for informational purposes only.

(63) The following portions of the *California Environmental Quality Act* submitted on October 20, 1980, by the Governor's designee: Sections 21000; 21001; 21002; 21002.1; 21061; 21063; 21065; 21080.1; 21080.4; 21080.5 (a), (b), (c) and (d); 21081; 21082; 21100; 21104; 21151; 21153; 21160.

(64) Revised regulations for the following APCD submitted on February 13, 1980, by the Governor's designee.

(i) San Diego County APCD.

(A) Rules 20.1, 20.2, 20.3, 20.4, 20.5 and 20.6.

(65) The following amendments to the South Coast Air Basin Control Plan were submitted on July 25, 1979, by the Governor's designee.

(i) The *South Coast Air Basin Control Strategy* (Chapter 18 of the Comprehensive Revision to the State of California Implementation Plan for the Attainment and Maintenance of Ambient Air Quality Standards). Those portions of the *South Coast Air Basin Control Strategy* identified by Table 18–1, ''Location of Plan Elements Which Meet Clean Air Act Requirements,'' together with Rules 1115 and 1126, comprise the submitted nonattainment area plan control strategy. The remaining portions are for informational purposes only.

(ii) New or amended Rules 218, 431, 431.1–431.3, 1120, 1206–1208, 1212, 1213, 1215, 1216, 1218, 1219, 1222, and 1225–1230.

(iii) Previously approved on September 28, 1981 and now deleted without replacement for implementation in the Antelope Valley Air Pollution Control District Rules 1206, 1208, 1212, 1213, 1215, 1216, 1218, 1219, 1222, and 1225–1230.

(iv) Previously approved on September 28, 1981 in paragraph (c)(65)(ii)

of this section and now deleted without replacement Rules 1206, 1208, 1212, 1213, 1215, 1216, 1218, 1219, 1222, and 1225 to 1230.

(v) Previously approved on September 28, 1981 in paragraph (c)(65)(ii) of this section and now deleted without replacement for implementation in the Mojave Desert Air Quality Management District (Riverside County), Rules 1206, 1208, 1212, 1213, 1215, 1216, 1218, 1219, 1222, and 1225 to 1230.

(66) Revised regulations for the following APCD's, submitted on February 7, 1980, by the Governor's designee.

(i) South Coast AQMD.

(A) New or amended Rule 461.

(B) Amended Rule 466.

(ii) Bay Area AQMD.

(A) Regulation 8: Rule 1, 2 (except paragraph 301), 4, 7, 8, 9, 10, 11, 13, 14, 15, 16, 18 and 19.

(67) Revised regulations for the following APCD's, submitted on April 2, 1980, by the Governor's designee.

(i) South Coast AQMD.

(A) New or amended Rule 1122.

(B) New or amended Rules 107, 709(c), 1111, 1121 and 1140.

(ii) Bay Area AQMD.

(A) New or amended Regulation 9, Rules 9–4–100, 9–4–101, 9–4–200 to 9–4–203, 9–4–300, 9–4–301, 9–4–303, and 9–4–400 to 9–4–404.

(iii) Kern County APCD.

(A) New or amended Rules 412.1(b)–(f).

(B) New Rule 411.1.

(C) Previously approved on July 8, 1982 and now deleted without replacement for implementation in the Southeast Desert Air Basin, Rule 411.1.

(iv) Sacramento County APCD.

(A) New or amended Rules 7, 24, 25, 28, 30, and 53.

(B) New or amended Rules 120, 121, and 122.

(68) Revised regulations for the South Coast AQMD, submitted on April 3, 1980, by the Governor's designee.

(i) New or amended Rules 1301, 1303, 1304, 1305, 1306, 1307, 1310, 1311, and 1313.

(ii) Previously approved on January 21, 1981 and now deleted without replacement Rule 1311.

(69) Revised regulations for the South Coast AQMD submitted on April 23, 1980, by the Governor's designee.

(i) New or amended Rules 464, 465, 1123, and 1125.

(ii) New or amended Rules 301, 405, 431.2(c)(5), 701, 702 (a), (d), (e), (f), (h) and (i), 703–706, 708.3(a), (b)(8)–(b)(10), 708.4(g) and (h), 709(a), 710(a) and (b)(4), 711(a)(1), (a)(4), (b)(1) and (b)(4), and 713–715.

(iii) New Rule 1103.

(iv) California Health and Safety Code, Sections 41950 to 41962, 94000 to 94004; and Stationary Source Test Methods—Volume 2: Certification and Test Procedures for Gasoline Vapor Recovery Systems submitted on April 23, 1980.

(v) Previously approved on July 8, 1982 in paragraph (c)(69)(iii) of this section and now deleted without replacement for implementation in the Antelope Valley Air Pollution Control District Rule 1103.

(70) Revised regulations for the following APCD's submitted on August 15, 1980, by the Governor's designee.

(i) South Coast AQMD.

(A) New or amended Rules 1302 and 1308.

(B) New or amended Rule 1101.

(*1*) Previously approved on September 2, 1981 in paragraph (c)(70)(i)(B) of this section and now deleted without replacement, for the Antelope Valley area only, Antelope Valley Rule 1101, previously South Coast Rule 1101. South Coast Rule 1101 remains in effect for the South Coast area.

(C) New or amended Rules 702(b), 707, 708, 708.3 (a)(2) and (c), 708.4 (a) and (b), 709(e), 710 (b)(1)(D), (b)(2)(D), (b)(3)(B), and (c)(3)(B), 711 (a)(1)(E), (a)(2)(D), (a)(3)(B), (a)(4)(F), (b)(3)(B), and (b)(4)(f), and 1102.

(D) Amended Rule 401 (except subparagraph 401(b)).

(ii) San Diego County APCD.

(A) New or amended Rules 2 (z) and (aa), 40, and 10 (f) and (i).

(iii) Shasta County APCD.

(A) Amended Rule 3.3.

(iv) El Dorado County APCD (Mountain Counties and Lake Tahoe Air Basin).

(A) New or amended Rules 601–613.

(B) Previously approved on May 27, 1982 in paragraph (c)(70)(iv)(A) of this section and now deleted without replacement, Rules 601 to 613.

(71) The *San Joaquin Valley Air Basin Control Strategy (Chapter 16 of the Comprehensive Revisions to the State of California Implementation Plan for the Attainment and Maintenance of Ambient Air Quality Standards)* submitted on October 11, 1979, by the Governor's designee. Those portions of the *San Joaquin Valley Air Basin Control Strategy* identified by Tables 16–1a, 1b and 1c (Summary of Plan Compliance with Clean Air Act Requirements) except for those portions which pertain to Fresno County and the six transportation control measures for Stanislaus County, comprise the submitted plan. The remaining portions are for informational purposes only. The following rules were also submitted on October 11, 1979 as part of the enforceable plan:

(i) Kings County APCD.

(A) New or amended Rules 411 and 414.3.

(B) Previously approved on May 7, 1982 in paragraph (c)(71)(i)(A) of this section and now deleted without replacement: Rule 414.3.

(ii) Madera County APCD.

(A) New or amended Rule 210.1 (except paragraphs (3)(D) and (5)(B)(8)).

(iii) Merced County APCD.

(A) New or amended Rules 409.3 and 410.

(iv) Tulare County APCD.

(A) New or amended Rule 410.3.

(72) The San Francisco Bay Area Basin Control Strategy (Chapter 15 of the Comprehensive Revisions to the State of California Implementation Plan for the Attainment and Maintenance of Ambient Air Quality Standards) including appendices, submitted on July 25, 1979, by the Governor's designee.

(73) Revised regulations for the following APCD's submitted on January 14, 1980, by the Governor's designee.

(i) Bay Area AQMD.

(A) Regulation 2: Rule 1: 2–1–200, 2–1–300, 2–1–307, and 2–1–400, Rule 2: 2–2–100, 2–2–200, 2–2–209, 2–2–210, 2–2–300, and 2–2–400; Rule 3: 2–3–100, 2–3–101, 2–3–200, 2–3–201, 2–3–300, 2–3–301, 2–3–302, 2–3–401, 2–3–401.1 to 2–3–401.3, 2–3–402, 2–3–403, 2–3–404, and 2–3–405.

(B) New or amended Regulation 2, Rule 1: 2–1–100 to 2–1–102, 2–1–111, 2–1–112, and 2–1–408.

(74) Revised regulations for the following APCD's submitted on December 24, 1979, by the Governor's designee.

(i) Imperial County APCD.

(A) New or amended Rules 111, 413, 414, 416, 416 (deletion), and 517.

(B) Previously approved on January 27, 1981 and now deleted without replacement Rule 517.

(ii) Santa Barbara County.

(A) Rule 316.

(iii) Ventura County APCD.

(A) New Rule 70 (except paragraph E).

(75) Revised regulations for the Kern County APCD, submitted on January 8, 1980, by the Governor's designee.

(i) Rules 210.2, 410.3, 411, 414, 414.1, and 414.3.

(ii) New or amended Rule 424(F).

(iii) Previously approved on August 21, 1981 and now deleted without replacement for implementation in the Southeast Desert Air Basin, Rule 414.3.

(iv) Previously approved on August 21, 1981 in paragraph (c)(75)(i) of this section and now deleted without replacement within the San Joaquin Valley Unified Air Pollution Control District area, Rule 414.3.

(76) Revised regulations for the following APCD's, submitted on April 15, 1980, by the Governor's designee.

(i) Kern County APCD.

(A) Amended Rule 210.1

(77) The following amendments to the plan were submitted on October 18, 1979, by the Governor.

(i) San Luis Obispo County APCD.

(A) New or amended Rules 415, 416, 420, and 422.

(ii) The South Central Coast Air Basin Control Strategy [Chapter 17 of the Comprehensive Revision to the State of California Implementation Plan for the Attainment and Maintenance of Ambient Air Quality Standards]. Those portions of the South Central Coast Air Basin Control Strategy identified by Tables 17–1 and 17–2 ''Location of Plan Elements Which Meet Clean Air Act Requirements'' together with the rules identified below comprise the submitted nonattainment area plan. The remaining portions are for informational purposes only.

(A) Santa Barbara County APCD Rules 320, 321, 323, 327, 329 to 332, 201.C and 205.C. (except subparagraph 5.b.8.).

(B) Ventura County APCD Rules 26 (except 26.2, 26.3 and 26.4), 74.4, 74.7, and 74.8.

(78) Revised regulations for the following APCD submitted on November 19, 1979, by the Governor's designee.

(i) South Coast AQMD.

(A) Deletion of Rules 67 and 72.

(ii) California Lead SIP.

(79) Revised regulations for the following APCD's submitted on June 2, 1980, by the Governor's designee.

(i) Monterey Bay Unified APCD.

(A) Rule 427.

(ii) Bay Area AQMD.

(A) New or amended Regulation 1, Rules 1–100 to 1–111, 1–114, 1–200 to 1–205, 1–207 to 217, 1–219 to 1–232, 1–400 to 1–402, 1–410 to 1–412, 1–420, 1–430 to 1–434, 1–440, 1–441, 1–500 to 1–502, 1–510, 1–521, 1–530, 1–540, 1–541, 1–543, 1–544; Regulation 5, Rules 5–100, 5–101, 5–110, 5–111, 5–200 to 5–207, 5–300, 5–301, 5–400 to 5–404; Regulation 6, Rules 6–100, 6–101, 6–200 to 6–204, 6–300 to 6–304, 6–310, 6–312,6–320, 6–330, 6–400, 6–401, 6–500 to 6–502; Regulation 11, Rules 11–1–100 to 11–1–102, 11–1–300 to 11–1–303; Regulation 12, Rules 12–2–100, 12–2–101, 12–2–200, 12–2–201, 12–2–300, 12–2–301, 12–2–500, 12–2–501, 12–3–100, 12–3–101, 12–3–300, 12–3–301, 12–3–500, 12–3–501–12–4–100 to 12–4–102, 12–4–200 to 12–4–212, and 12–4–300 to 12–4–307.

(B) New or amended Regulation 1: 1–206, 1–520, 1–542, and 1–600 to 1–604; Regulation 6: 6–305, 6–311, 6–600, and 6–601; and Regulation 11: 11–1–500, 11–1–501, and 11–1–600 to 11–1–603.

(iii) Ventura County APCD.

(A) New or amended Rule 2.

(B) New or amended Rule 59.

(iv) South Coast AQMD.

(A) Deletion of Rule 471.

(B) New Rule 466.1.

(v) San Diego County APCD.

(A) New or amended Rules 1, 2 (a), (b), (t), (v), (u), (x), and (y), 14, 17, 67.0, and 67.1.

(B) Previously approved on September 28, 1981 in paragraph (c)(79)(v)(A) of this section and now deleted without replacement Rule 14.

(vi) Shasta County APCD.

(A) New Rule 3.17.

(80) The following amendments to the plan were submitted on August 21, 1979 by the Governor's designee.

(i) Revised regulations for Placer County APCD—Lake Tahoe Air Basin Portion.

(A) New or amended Rules 101–104, 201–204, 206–211, 215, 217, 301–308, and 310–319.

(B) New Rule 507.

(C) New or amended Rules 502–506 and 511–513.

(D) Previously approved and now deleted, Rule 104.

(E) New or amended Rules 212, 213, 508 (except Paragraph (1)(C)(3)(h), and 514.

(F) Previously approved on June 23, 1982 in paragraph (c)(80)(i)(C) of this section and now deleted without replacement Rules 504, 506, and 511 to 513.

(G) Previously approved on June 23, 1982 in paragraph (c)(80)(i)(E) of this section and now deleted without replacement: Rule 508.

(ii) Chapter 8, Lake Tahoe Basin Control Strategy, including Support Documents and Appendices. The Transportation Improvement Program and Regional Transportation Plan are for informational purposes only.

(81) Revised regulations for the following APCD, submitted on February 11, 1980 by the Governor's designee.

(i) El Dorado County APCD—Lake Tahoe Air Basin Portion.

(A) New or amended Rules 507, 511–515, and 519–528.

(B) New or amended Rules 501 to 506, 508 to 510, and 516 to 518.

(C) Previously approved on May 18, 1981 in paragraph (c)(81)(i)(A) of this section and now deleted without replacement Rules 512, 514, 519, and 520 to 524.

(82) [Reserved]

(i) Ventura County APCD.

(A) New or amended Rule 74.6.

(83)(i)(A) [Reserved]

(B) New Rules 22, 23, and 27.

(C) New or amended Regulation 8: Rule 21.

(ii) Kings County APCD.

(A) New or amended Rule 414.

(iii) [Reserved]

(A) Rule 410.

(B) New or amended Rules 411.1 and 416.1.

(84) Revised regulations for the following APCDs submitted on October 10, 1980, by the Governor's designee.

(i) Madera County APCD.

(A) New or amended Rule 410.4.

(ii) Merced County APCD.
(A) New or amended Rule 409.4.
(iii) Kings County APCD.
(A) New or amended Rule 410.4.
(iv) San Joaquin County APCD.
(A) New or amended Rule 409.4.
(v) Stanislaus County APCD.
(A) New or amended Rule 409.4.
(vi) Tulare County APCD.
(A) New or amended Rule 410.4.
(vii) Modoc County APCD.
(A) Amended Rule 3:12.

(85) Revised regulations for the following APCDs submitted on December 15, 1980, by the Governor's designee.
(i) Tulare County APCD.
(A) New or amended Rule 412.
(B) New or amended Rule 412.1.
(C) New or amended Rules 201 and 417.1.
(ii) Madera County APCD.
(A) New or amended Rule 412.1
(B) New or amended Rules 201, 202, 301, and 417.1.
(iii) Sacramento County APCD.
(A) New or amended Rule 13.
(iv) San Diego County APCD.
(A) New or amended Rules 61.0, 61.0 (n) and (o), 61.1, 61.1(a)(1) (i) and (h), 61.2, 61.2(a), 61.3 and 61.4
(v) San Bernardino County APCD, Southeast Desert Air Basin portion.
(A) New or amended Rules 461 and 462.
(vi) Tehama County APCD.
(A) New or amended Rules 1.2, 1.3, 2.7, 2.8, 2.9, 3.1, 3.2, 3.3–3.14, 4.1, 4.2, 4.6, and 4.7.
(B) Previously approved and now deleted Rule 2.8 (Further Information).
(C) Previously approved on April 12, 1982 in paragraph (c)(85)(vi)(A) of this section and now deleted without replacement, Rules 1.3 and 2.9.
(D) Previously approved on April 12, 1982 in paragraph (c)(85)(vi)(A) of this section and now deleted without replacement Rules 2.7 and 2.8.
(vii) Santa Barbara County APCD.
(A) New or amended Rule 210.
(B) Previously approved on June 18, 1982 in paragraph (c)(85)(vii)(A) of this section and now deleted without replacement, Rule 210.
(viii) South Coast AQMD.
(A) New Rule 1130.
(ix) Kings County APCD.
(A) New or amended Rule 417.1.
(x) Kern County APCD.
(A) New or Amended Rules 110 and 417.1.
(B) Previously approved on July 6, 1982 in paragraph (c)(85)(x)(A) of this section and now deleted without replacement, Rule 110.
(C) Previously approved on July 6, 1982 in paragraph (c)(85)(x)(A) of this section and now deleted without replacement for implementation in Kern County, Southeast Desert Air Basin Rule 110.

(86) Revised regulations for the following APCD's submitted on July 10, 1980 by the Governor's designee.
(i) Bay Area AQMD.
(A) Regulation 8: Rule 2 (Paragraph 301).
(B) New Rules 17 (paragraphs 112, 302, 400, and 401) and 26.
(C) New or amended Regulations, Rules 1–206, 1–218, 6–311, 9–1–100, 9–1–101, 9–1–110 9–1–200 to 9–1–204, 9–1–300 to 9–1–308, 9–1–310, 9–1–311, 9–1–400 to 9–1–404, 9–1–500 to 9–1–502, and 9–4–302.
(D) New or amended Rule 1–541 and Regulation 9, Rules 9–1–600 to 9–1–605.
(ii) Butte County APCD.
(A) Amended Rule 4.9.
(B) Previously approved on May 27, 1982 in paragraph (ii)(A) of this section and now deleted Rule 4.9.

(87) Revised regulations for the following APCD's submitted on September 5, 1980 by the Governor's designee.
(i) Bay Area AQMD.
(A) Regulation 8: Rule 5, Rule 6, and Rule 12.
(B) New Rules 25 and 28 (except section 401).
(ii) San Diego County APCD.
(A) New or amended Rule 19.
(iii) San Joaquin County APCD.
(A) New or amended Rule 411.2.
(B) New or amended Rules 202 and 416.1.
(iv) San Bernardino County APCD, Southeast Desert Air Basin portion.
(A) New or amended Rules 1301, 1302, 1303, 1304, 1305, 1306, 1307, 1308, 1310, 1311, and 1313.
(v) Los Angeles County APCD, Southeast Desert Air Basin portion.
(A) New or amended Rules 1301, 1302, 1303, 1304, 1305, 1306, 1307, 1308, 1310, 1311, and 1313.
(vi) Sacramento County APCD.

(A) New or amended Rules 74, 90, 92, 93, 94, 95, 96, 98, and Regulation VII.

(B) Previously approved on June 18, 1982 and now deleted without replacement Rule 74.

(vii) Ventura County APCD.

(A) New or amended Rules 2 and 55.

(viii) Shasta County APCD.

(A) New Rule 2:6.

(88) Revised regulations for the following APCDs submitted on July 25, 1980, by the Governor's designee.

(i) Stanislaus County APCD.

(A) New or amended Rule 209.1 (except paragraphs (3)(E) and (5)(B)(8)).

(B) New or amended Rules 103 and 305.

(C) New or amended Rules 202 and 416.1.

(D) Previously approved on December 9, 1981 and now deleted without replacement Rule 305.

(ii) Bay Area AQMD.

(A) New or amended Regulation 3, Rules 3–100 to 3–103, 3–200 to 3–206, 3–208 to 3–211, 3–300 to 3–311, and 3–400 to 3–408.

(iii) South Coast AQMD.

(A) New or amended Rule 1119.

(B) Amended Rule 462.

(C) In Resolution 11–04 dated January 18, 2011, Antelope Valley Air Quality Management District certified that no sources which would be subject to Rule 1119, ''Petroleum Coke Calcining Operations,'' exist in the AVAQMD. Therefore, Rule 1119 has been rescinded and is removed from the SIP.

(iv) [Reserved]

(v) Merced County APCD.

(A) New or amended Rule 411.1.

(B) New or amended Rules 202 and 416.1.

(89) Revised regulations for the following APCDs submitted on March 30, 1981, by the Governor's designee.

(i) Kings County APCD.

(A) New or amended Rule 411.

(ii) Yolo-Solano County APCD.

(A) New or amended Rule 2.13(h)(6).

(iii) Yuba County APCD.

(A) Amended Rules 3.8, 3.12, and 3.15.

(B) New or amended rules 1.3, 3.0–3.7, 3.9, 3.10, 3.13, 4.0–4.5, 4.7 to 4.10, 4.12, 5.4, 6.0, 8.0, 8.2, 9.0–9.5, 9.7, and 9.8.

(C) Previously approved on April 12, 1982 in paragraph (c)(89)(iii)(B) of this section and now deleted without replacement, Rules 8.0, 8.2 and 9.0 to 9.4.

(D) Previously approved on April 12, 1982 in paragraph (c)(89)(iii)(B) of this section and now deleted without replacement Rules 4.7, 4.8, 4.9, 4.10, 5.4, and 6.0.

(E) Previously approved on May 3, 1982, in paragraph (c)(89)(iii)(A) of this section and now deleted with replacement in paragraph (c)(457)(i)(A)(*5*) by Feather River Air Quality Management District Rule 3.15, ''Architectural Coatings.''

(iv) Imperial County APCD.

(A) New Rule 418.1.

(v) Monterey Bay Unified APCD.

(A) New Rule 425.

(vi) Lake County APCD.

(A) New or amended Sections 101, 227.4, 301, 1602, and Table VI.

(B) Previously approved on April 13, 1982 and now deleted without replacement Rule 301 and Table VI.

(vii) South Coast AQMD.

(A) Amended Rule 1102.1.

(90) The following amendments to the plan were submitted on December 31, 1979, by the Governor's designee.

(i) Chapter 22—Air Quality Monitoring by State and Local Air Monitoring Stations (SLAMS).

(91) The following amendments to the plan were submitted on November 13, 1979, by the Governor's designee.

(i) The Sacramento Valley Air Basin Control Strategy (Chapter 13 of the Comprehensive Revisions to the State of California Implementation Plan for the Attainment and Maintenance of Ambient Air Quality Standards): those portions pertaining to the Sacramento Metropolitan Area including the following rules:

(A) Placer County APCD (Mountain Counties Air Basin portion) Rules 212, 217, and 218.

(B) Sacramento County APCD Rules 6, 11, 12, 16, 19, and 56 (except paragraph (5)(a)(8)).

(C) Yolo-Solano County APCD Rules 2.14 and 3.4 [except paragraph (5)(a)(8)].

(ii) The Sacramento Valley Air Basin Control Strategy [Chapter 13 of the Comprehensive Revisions to the State of California Implementation Plan for the Attainment and Maintenance of Ambient Air Quality Standards]: those portions pertaining to Butte, Yuba, and Sutter Counties, including the following rules:

(A) Butte County APCD Rules 2.12f and 4–5.

(92) Revised regulations for the following APCDs submitted on May 28, 1981, by the Governor's designee.

(i) Stanislaus County APCD.

(A) New or amended Rule 409.5.

(ii) Placer County (Mountain Counties Air Basin portion).

(A) New or amended Rules 213, 216, and 223.

(B) New or amended Rules 102, 203, 211, 301, 305, 306, 324, 325, 601, and 702.

(C) Rule 214.

(D) Previously approved and now deleted without replacement Rules 601 and 702.

(iii) Lake County APCD.

(A) New Rule 216.1.

(iv) Great Basin Unified APCD.

(A) New or amended Rules 101, 300, 404–A, 423, and 424.

(B) Previously approved on April 13, 1982 in paragraph (c)(92)(iv)(A) of this section and now deleted without replacement, Rule 300.

(v) San Diego County APCD.

(A) New or amended Rules 127, 130, 131, 132, and 134.

(B) New or amended Rule 21.

(vi) South Coast AQMD.

(A) New or amended Rule 1113.

(93) Revised regulations for the following APCDs submitted on June 22, 1981, by the Governor's designee.

(i) Stanislaus County APCD.

(A) New or amended Rule 409.3.

(B) New or amended Rule 409.8.

(ii)(A) [Reserved]

(B) New Rule 28, Section 401.

(C) New or amended Regulation 5, Rule 5–401.3.

(iii) Plumas County APCD.

(A) New or amended Rules 203, 301–319, 512–516, 703, and 710.

(B) New or amended Rules 501–511 and 517–521.

(C) Previously approved on June 18, 1982 in paragraph (c)(93)(iii)(B) of this section and now deleted without replacement, Rule 509.

(D) Previously approved on June 18, 1982 in paragraph (c)(93)(iii)(B) of this section and now deleted without replacement Rules 503, 504, 506, and 518 to 521.

(E) Previously approved on June 18, 1982 in paragraph (c)(93)(iii)(B) of this section and now deleted without replacement Rules 507 and 508.

(iv) Sierra County APCD.

(A) New or amended Rules 203, 301–319, 512–516, 522, 523, 703, and 710.

(B) New or amended Rules 501–511 and 517–521.

(C) Previously approved on April 23, 1982 and now deleted without replacement Rule 522.

(D) Previously approved on June 18, 1982 in paragraph (c)(93)(iv)(B) of this section and now deleted without replacement, Rule 509.

(E) Previously approved on June 18, 1982 in paragraph (c)(93)(iv)(B) of this section and now deleted without replacement Rules 503, 504, 506, and 518 to 521.

(F) Previously approved on June 18, 1982 in paragraph (c)(93)(iv)(B) of this section and now deleted without replacement Rules 507 and 508.

(v) Kern County APCD.

(A) New or amended Rule 410.6.

(vi) El Dorado County APCD (Mountain Counties Air Basin Portion).

(A) Rules 318, 319, and 320.

(94) Revised regulations for the following APCD's submitted on October 7, 1980, by the Governor's designee.

(i) Stanislaus County APCD.

(A) New or amended Rule 411.1.

(ii) [Reserved]

(iii) San Bernardino County APCD.

(A) New or amended Rules 701, 704, 705, 707–711, and 712. Previously approved Rule 707, ''Plans'', submitted on June 6, 1977 is retained.

(95) Revised regulations for the following APCD's submitted on March 23, 1981, by the Governor's designee.

(i) Kern County APCD.

(A) New or amended Rule 412.1(a).

(B) Amended Rule 412.1.

(C) New or amended Rules 202, 202.1, and 426.

(ii) Ventura County APCD.

(A) Amended Rule 26.2.

(B) New or amended Rules 21, 29, 30, and 64.

(C) Previously approved on June 18, 1982 and now deleted without replacement Rule 21.

(iii) Northern Sonoma County APCD.

(A) Amended Regulation 2, Rules 100, 120, 140, 200, 220, 240, 300, and 320.

(iv) South Coast AQMD.

(A) Amended Rule 461.

(v) Stanislaus County APCD.

(A) New Rule 409.7.

(B) New or amended Rule 301.

(C) Previously approved on June 18, 1982 and now deleted without replacement Rule 301.

(vi) Humboldt County APCD.

(A) New or amended Rules 130, 200, 210, 220, 230, 240, 250, and 260.

(B) Previously approved on June 18, 1982 in paragraph (c)(95)(vi)(A) of this section now deleted without replacement for implementation in the North Coast Unified Air Quality Management District, Rule 250.

(96) Revised regulations for the following APCDs submitted on November 3, 1980, by the Governor's designee.

(i) South Coast AQMD.

(A) New or amended Rule 1113.

(ii) Butte County APCD.

(A) New or amended Rules 1–8, 1–8.1, 1–10, 1–13, 1–14, 3–1, 3–2, 3–6, 3–11, 3–11.2, 3–11.3, 3–12, 3–12.1, 3–12.2, 3–14, 3–15, 3–16, and 3–16.1.

(iii) Glenn County APCD.

(A) New or amended Rules 2 (a,i,v, and aa), 3, 11, 11.1, 11.2, 13, 13.1, 14, 14.1, 14.2, 14.3, 15, 16, 19, 21, 21.1, 22, 75, 81, 83, 83.1, 83.2, 96, 110, and 112.

(B) Previously approved on January 26, 1982 and now deleted without replacement Rules 110 and 112.

(C) Previously approved on January 26, 1982 in paragraph (c)(96)(iii)(A) of this section and now deleted without replacement, Rule 3.

(D) Previously approved on January 26, 1982 in paragraph (c)(96)(iii)(A) of this section and now deleted without replacement Rule 96.

(iv) Yolo-Solano APCD.

(A) New or amended Rules 1.2 (a and g), 6.1 and 6.3.

(v) Bay Area AQMD.

(A) New Rule 20.

(97) Revised regulations for the following APCDs submitted on June 24, 1980, by the Governor's designee.

(i) Sacramento County APCD.

(A) New or amended Rule 18.

(98) Revised regulations for the following APCDs, submitted on January 28, 1981, by the Governor's designee.

(i) Sutter County APCD.

(A) Amended Rules 3.8, 3.14, and 3.15.

(B) New or amended Rules 1.0–1.3, 2.1–2.12, 2.15, 2.16, 3.0–3.7, 3.9, 3.10, 3.12, 3.13, 4.0–4.5, 4.7–4.10, 4.12–4.15, 5.0–5.19, 6.0–6.7, 7.0, 7.1, 7.2, 8.0, 8.1, 8.2, 9.0–9.7, and 9.8.

(C) Previously approved and now deleted Rules 2.1 (Control of Emissions), 2.7 (Wet Plumes), 2.15 (Fuel Burning Equipment), 2.20 (Payment of Order Charging Costs), 3.7 (Information), 4.5 (Standards for Granting Applications), 4.6 (Permits, Daily Limits, and 4.8 (Permit Forms).

(D) Previously approved on April 12, 1982 and now deleted without replacement Rules 5.0 to 5.17, 5.19, 6.0 to 6.7, and 7.0 to 7.2.

(E) Previously approved on April 12, 1982 in paragraph (c)(98)(i)(B) of this section and now deleted without replacement, Rules 8.0 to 8.2 and 9.0 and 9.4.

(F) Previously approved on April 12, 1982 in paragraph (c)(98)(i)(B) of this section and now deleted without replacement Rules 4.7, 4.9, 4.10, 5.18, 9.7, and 9.8.

(G) Previously approved on May 3, 1982, in paragraph (c)(98)(i)(A) of this section and now deleted with replacement in paragraph (c)(457)(i)(A)(*5*) by Feather River Air Quality Management District Rule 3.15, ''Architectural Coatings.''

(ii) Siskiyou County APCD.

(A) New or amended agricultural burning regulations consisting of ''General Provisions'' and Articles I–VII.

(iii) Mendocino County APCD.

(A) Amended Regulation 2, Rules 100, 120, 140, 200, 220, 240, 300, 320, Appendices A, B, and C.

(iv) Del Norte County APCD.

(A) Amended Regulation 2, Rules 100, 120, 140, 200, 220, 240, 300, 320, Appendices A, B, and C.

(v) Humboldt County APCD.

(A) Amended Regulation 2, Rules 100, 120, 140, 200, 220, 240, 300, 320, Appendices A, B, and C.

(vi) Trinity County APCD.

(A) Amended Regulation 2, Rules 100, 120, 140, 200, 220, 240, 300, 320, Appendices A, B, and C.

(vii) El Dorado County APCD.

(A) New Rule 313.

(B) Rules 313, 314, 315, 316, and 317.

(viii) Ventura County APCD.

(A) New Rule 71.2.

(ix) Bay Area AQMD.

(A) New or amended Rules 1–112, 1–113, 1–115 and Regulation 9, Rule 9–3–202.

(x) South Coast AQMD.

(A) New or amended Rule 1115.

(xi) San Diego County APCD.

(99) Commitments by the Bay Area AQMD, Fresno County APCD, Kern County APCD, Monterey Bay Unified APCD, Sacramento County APCD, San Diego County APCD, Santa Barbara County APCD, South Coast AQMD, and Ventura County APCD to carry out public notification programs as required by section 127 of the Clean Air Act and in accordance with EPA guidance. These commitments were submitted by the Air Resources Board on January 22, 1981.

(100) Revised regulations for the following APCDs submitted on October 25, 1979, by the Governor's designee.

(i) San Diego County APCD.

(A) New or amended Rules 67.3 and 67.5.

(101) Revised regulations for the following APCD's submitted on July 30, 1981 by the Governor's designee.

(i) Bay Area AQMD.

(A) Regulation 8, Rule 1 (Paragraph 202) and Rule 16 (paragraph 110).

(B) New or amended Regulation 2, Rule 2–2–114; Regulation 5, Rule 5–401.13; and Manual of Procedures—Volume I to Volume VI.

(C) New or amended Regulation 8, Rule 24.

(ii) Kern County APCD.

(A) New or amended Rules 603, 609, 610, 611, and 613.

(B) New or amended Rules 108, 201, 301, 302, and 305.

(C) New or amended Rules 414 and 410.3.

(D) New or amended Rules 410.7, 412, and 414.4.

(E) Previously approved on July 6, 1982 and now deleted without replacement Rule 305 (including Southeast Desert).

(F) Previously approved on October 11, 1983 and now deleted without replacement for implementation in the Southeast Desert Air Basin, Rule 414.4.

(G) Previously approved on July 6, 1982 in paragraph (c)(101)(ii)(B) of this section and now deleted without replacement, Rules 301 and 302 (including Southeast Desert).

(102) Revised rules for the following APCDs submitted on July 14, 1981 by the Governor's designee.

(i) San Joaquin County.

(A) New Rules 409.5 and 409.6.

(ii) Stanislaus County.

(A) New Rule 409.6.

(B) New or amended Rules 409.7 and 409.8.

(iii) Merced County APCD.

(A) New or amended Rules 409.6.

(iv) South Coast AQMD.

(A) New or amended Rule 301.

(103) Revised rules for the following APCDs, submitted on October 23, 1981 by the Governor's designee.

(i) Kings County.

(A) Amended Rule 412.2.

(ii) San Diego County APCD.

(A) New or amended Rule 67.4 and 67.6.

(B) New or amended Rules 42, 64, 101–103, and 109.

(C) New Rule 67.8.

(D) Previously approved on July 6, 1982 and now deleted without replacement Rule 42.

(E) Previously approved on July 6, 1982 in paragraph (c)(103)(ii)(B) of this section and now deleted Rule 109 (now replaced by Rule 101).

(iii) Santa Barbara County APCD.

(A) Rule 325.

(B) New or amended Rules 601–608 and 609.

(C) Previously approved and now deleted Rules 609 (Scientific Committee) and 610 (Emergency Action Committee).

(iv) Ventura County APCD.

(A) Amended Rule 70(E).

(B) New or amended Rules 2, 12, 16, 23, 41, 42, and 74.2.

(C) New Rule 74.5.

(D) Amended Rule 74.9.

(E) Previously approved on June 18, 1982 and now deleted without replacement Rule 42.

(v) Sacramento County APCD.

(A) Amended Rule 20.

(B) New or amended Rules 50, 70, and 14.

(C) New Rules 4A, 4B, 10 and 51.

(vi) Del Norte County APCD.

(A) Amended Rules 300 and 310.

(B) Previously approved on April 13, 1982 and now deleted without replacement Rules 300 and 310.

(vii) Humboldt County APCD.

(A) Amended Rules 300 and 310.

(B) Previously approved on April 13, 1982 and now deleted without replacement Rules 300 and 310.

(viii) Mendocino County APCD.

(A) Amended Rules 300 and 310.

(B) Previously approved on April 13, 1982 and now deleted without replacement Rules 300 and 310.

(ix) Northern Sonoma County APCD.

(A) Amended Rules 300 and 310.

(B) Previously approved on April 13, 1982 and now deleted without replacement Rules 300 and 310.

(x) Trinity County APCD.

(A) Amended Rules 300 and 310.

(B) Previously approved on April 13, 1982 and now deleted without replacement Rules 300 and 310.

(xi) Great Basin Unified APCD.

(A) Amended Rule 301.

(B) Previously approved on April 13, 1982 in paragraph (c)(103)(xi)(A) of this section and now deleted without replacement, Rule 301.

(xii) San Luis Obispo County APCD.

(A) New or amended Rules 301, 302, and 411.

(B) Previously approved on June 18, 1982 and now deleted without replacement Rule 301.

(C) Previously approved on June 18, 1982 and now deleted without replacement Rule 301.

(xiii) El Dorado County APCD (Mountain Counties Air Basin).

(A) New or amended Rules 301–319, 501, 703, and 710.

(B) Previously approved on May 27, 1982 and now deleted without replacement rule 501.

(C) Previously approved on May 27, 1982 in paragraph (c)(103)(xiii)(A) of this section and now deleted without replacement, Rules 318 and 319.

(D) Previously approved on May 27, 1982 in paragraph (c)(103)(xiii)(A) of this section and now deleted without replacement Rule 710.

(xiv) Imperial County APCD.

(A) New or amended Rules 101, 301, 302, 305–307.

(B) Previously approved on May 27, 1982 and now deleted without replacement Rule 305.

(C) Previously approved on May 27, 1982 in paragraph (c)(103)(xiv)(A) of this section and now deleted without replacement, Rules 301, 302, 306, and 307.

(xv) Shasta County APCD.

(A) Amended Rule 2:11.

(xvi) Monterey Bay Unified APCD.

(A) Amended Rules 301, 601, and 602.

(xvii) Tuolumne County APCD.

(A) New or amended Rules 203, 301–319, 501–521, 703, and 710.

(B) Previously approved on May 27, 1982 and now deleted without replacement Rule 516.

(C) Previously approved on May 27, 1982 in paragraph (c)(103)(xvii)(A) of this section and now deleted without replacement, Rule 509.

(D) Previously approved on May 27, 1982 in paragraph (c)(103)(xvii)(A) of this section and now deleted without replacement Rules 503, 504, 506, and 518 to 521.

(xviii) South Coast AQMD.

(A) New or amended Rules 504.1, 218, 219, 220, 409, and 502.

(B) Previously approved on July 6, 1982 and now deleted without replacement Rule 504.1.

(104) Revised regulations for the following APCD's submitted on November 5, 1981 by the Governor's designee.

(i) Bay Area AQMD.

(A) Regulation 2, Rule 1: 2–1–101, 2–1–102, 2–1–111, 2–1–112, 2–1–201 to 2–1–205, 2–1–301 to 2–1–306, 2–1–401 to 2–1–410, and 2–1–420 to 2–1–423; Rule 2: 2–2–101 to 2–2–114, 2–2–201 to 2–2–208, 2–2–301 to 2–2–306, 2–2–310, and 2–2–401 to 2–2–410.

(ii) South Coast AQMD.

(A) New or amended Rule 444.

(iii) Fresno County APCD.

(A) New or amended Rule 409.6.

(105) Schedule to study Nontraditional Total Suspended Particulate Sources and commitment to implement control measures necessary to provide for attainment, submitted on November 18, 1981 by the Governor's designee.

(106) The *Southeast Desert Air Basin Control Strategy* for ozone (Chapter 19 of the Comprehensive Revisions to the State of California Implementation Plan for the Attainment and Maintenance of the Ambient Air Quality Standards) was submitted by the Governor's designee on February 15, 1980. The portions of the *Southeast Desert Air Basin Control Strategy* identified in Table 19–1 (Summary of Plan Compliance with Clean Air Act Requirements), except those which pertain to Imperial County, comprise the plan. The remaining portions are for informational purposes only.

(107) On August 11, 1980, the Governor's designee submitted a revision to the State Implementation Plan which adds the Southeast Desert Air Basin portion of Riverside County into the South Coast Air Quality Management District.

(108) On November 28, 1980, the Governor's designee submitted a revision to the State Implementation Plan which deletes Rule 67, for the San Bernardino County APCD as applied to new sources.

(109) Three items submitted for Fresno County and the Sacramento Metropolitan Area by the Governor's designee on October 9, 1980:

(i) *Air Quality Planning Addendum-Council of Fresno County Governments 1979–84 Overall Work Program.*

(ii) *Emission Inventory, 1976* for the Sacramento Metropolitan Area.

(iii) *Air Quality Plan Technical Appendix, January 1979* for the Sacramento Metropolitan Area.

(110) Five items submitted for Ventura County by the Governor's designee on April 1, 1980:

(i) *Appendix B–81, Empirical Kinetic Modeling Approach:* Ozone Formation, Transport, and Concentration Relationships in Ventura County; Update of Emission Reduction Required for Attainment of Ozone NAAQS.

(ii) *Letter:* Jan Bush to Mike Redemer, January 23, 1981.

(iii) *Letter and enclosures:* Janet Lyders to Mike Scheible, February 6, 1981.

(iv) *Letter and enclosures:* Jan Bush to William Lockett, December 15, 1980.

(v) *Letter and enclosures:* Jan Bush to William Lockett, October 23, 1980.

(111) Four items submitted for Ventura County by the Governor's designee on July 16, 1981:

(i) Attachment V—Transportation Control Measures.

(ii) Ventura Air Quality Management Plan, Appendix O, *Plan for Attainment of Standards for Total Suspended Particulates In Ventura County: Interim Report,* July, 1980.

(iii) Attachment IV—Population Forecasts.

(iv) Attachment VI—Implementation of Emission Reductions Required for Attainment of TSP Standards.

(112) Plan for Attainment of the Federal Secondary Total Suspended Particulate Standard in Santa Clara County, an addendum to the San Francisco Bay Area Air Basin Control Strategy (Chapter 15) submitted on March 16, 1981, by the Governor's designee.

(113) Supplemental material for the San Diego Nonattainment Area Plan submitted on July 13, 1981, by the Governor's designee.

(114) Supplemental material for the San Diego Nonattainment Area Plan submitted on August 31, 1981, by the Governor's designee.

(115) Supplemental material for the San Diego Nonattainment Area Plan submitted on December 8, 1981, by the Governor's designee.

(116) Supplemental material for the South Coast Nonattainment Area Plan submitted on July 24, 1981, by the Governor's designee.

(117) Supplemental material for the South Coast Nonattainment Area Plan submitted on December 24, 1981, by the Governor's designee.

(118) Supplemental material for the South Coast Nonattainment Area Plan submitted on February 18, 1982, by the Governor's designee.

(119) Revised regulations for the following APCDs submitted on April 17, 1980, by the Governor's designee.

(i) El Dorado County APCD (Mountain Counties Air Basin).

(A) New or amended Rules 502–520.

(B) Rule 102.

(C) Previously approved on May 27, 1982 and now deleted without replacement Rules 502 to 508, 510 to 513, 515, 517 to 519, and 521.

(D) Previously approved on May 27, 1982 in paragraph (c)(119)(i)(A) of this section and now deleted without replacement, Rule 509.

(E) Previously approved on May 27, 1982 in paragraph (c)(119)(i)(A) of this section and now deleted without replacement Rule 520.

(ii) Mendocino County APCD.

(A) New or amended Rules 130, 200, 210, 220, 230, 240, 250, and 260.

(B) Previously approved on June 18, 1982 in paragraph (c)(119)(ii)(A) of this section and now deleted without replacement Rule 250.

(C) Previously approved on June 18, 1982 in paragraph (c)(119)(ii)(A) of this

section and now deleted with replacement in paragraph (c)(489)(i)(A)(*4*) of this section, Rule 230.

(120) *The Mountain Counties Air Basin Control Strategy* for ozone (Chapter 9 of the ''Comprehensive Revisions to the State of California Implementation Plan for the Attainment and Maintenance of the Ambient Air Quality Standards'' was submitted by the Governor's designee on April 3, 1981. The submittal also included revised regulations for the following APCD's.

(i) El Dorado County APCD (Mountain Counties Air Basin portion).

(A) Rules 401, 402, 403, 404, 405, 406, 407, 410, 411, 415, 416, 418, 419, 420, 421, 422, 423, 424, and 425.

(B) Previously approved on July 7, 1982 and now deleted without replacement Rules 401 to 407, 410 to 411, 415 to 416, and 418 to 424.

(C) Previously approved on July 7, 1982 in paragraph (c)(120)(i)(A) of this section and now deleted without replacement Rule 425.

(121) Revised regulations for the following APCDs submitted on March 1, 1982 by the Governor's designee.

(i) South Coast AQMD.

(A) New or amended Rule 474.

(B) Amended Rules 107, 1107, 1108.1, 1125 and 1126.

(C) Amended Rule 1110.

(D) Previously approved on October 11, 1983 and now deleted without replacement Rule 107.

(E) Previously approved on May 3, 1984 in paragraph (c)(121)(i)(C) of this section and now deleted without replacement for implementation in the South Coast Air Quality Management District, Rule 1110.

(F) Previously approved on May 3, 1984 in paragraph (c)(121)(i)(C) of this section and now deleted without replacement for implementation in the Antelope Valley Air Quality Management District, Rule 1110.

(ii) San Diego County APCD.

(A) New or amended Rules 62 and 53.

(B) Amended Rule 67.6(e).

(C) Amended Rule 17, adopted on November 25, 1981.

(iii) Lake County APCD.

(A) New or amended Rule 655.

(iv) Bay Area AQMD.

(A) Amended Regulation 8, Rules 2–112 and 5–313.4.

(v) Ventura County APCD.

(A) Amended Rule 74.6.

(122) [Reserved]

(123) Supplemental material for the Kern County Nonattainment Area Plan submitted on March 4, 1982, by the Governor's designee.

(124) Revised regulations for the following APCDs submitted on August 6, 1982, by the Governor's designee.

(i) Bay Area AQMD.

(A) New or amended Regulation 1: Rules 1–100, 1–112, 1–205, 1–233, 1–234, 1–235, 1–520, 1–522, 1–530, 1–540, 1–543, 1–544, and 1–602; Regulations 4: Rule 4–303; Regulation 5: Rules 5–208 and 5–402; and deletion of Regulation 6: Rule 6–132.

(B) [Reserved]

(C) Amended Regulation 8, Rules 2, 4, 5, 8 and 10.

(D) New or amended Regulation 2: Rules 2–1–207, 2–1–208, 2–1–301, 2–1–304, and 2–1–307.

(E) Amended Regulation 8, Rule 23.

(ii) Lake County APCD.

(A) New or amended Rules 630, 631, 660.1, 660.2, and 660.3.

(B) Previously approved on November 10, 1982 in paragraph (c)(124)(ii)(A) of this section and now deleted without replacement, Rules 660.1, 660.2, and 660.3.

(C) Previously approved on November 10, 1982 in paragraph (c)(124)(ii)(A) of this section and now deleted without replacement Rules 631 and 660.1 to 660.3.

(iii) San Joaquin County APCD.

(A) New or amended Rules 203, 415, 503, and 521.

(B) Previously approved on November 10, 1982 and now deleted without replacement Rules 503 and 521.

(iv) South Coast AQMD.

(A) New or amended Rule 407.

(B) Amended Rule 1107.

(C) [Reserved]

(v) Stanislaus County APCD.

(A) New or amended Rules 203 and 503.

(B) New or amended Rules 409.4 and 409.8.

(C) Previously approved on November 10, 1982 and now deleted without replacement Rule 503.

(vi) Del Norte County APCD.

(A) New or amended Rules 616, 618, and 620.

(B) New or amended Rule 230, adopted December 14, 1981.

(C) Previously approved on November 10, 1982 and now deleted without replacement Rules 616 and 618.

(vii) Humboldt County APCD.

(A) New or amended Rules 616, 618, and 620.

(B) New or amended Rule 230, adopted December 8, 1981.

(C) Previously approved on November 10, 1982 and now deleted without replacement Rules 616 and 618.

(D) Previously approved on November 10, 1982 in paragraph (c)(124)(vii)(A) of this section and now deleted without replacement Rule 620.

(viii) Mendocino County APCD.

(A) New or amended Rules 610, 616, 618, and 620.

(B) New or amended Rules 130 (introductory text, b1, m1, p5, and s2), and 230, adopted January 5, 1982.

(C) Previously approved on November 10, 1982 and now deleted without replacement Rules 616 and 618.

(ix) Northern Sonoma County APCD.

(A) New or amended Rules 616, 618, and 620.

(B) New or amended Rules 130 (introductory text, b1, n1, p5, and s2), 220(c), 230, and 260, adopted February 23, 1982 and rule 200, adopted June 15, 1982.

(C) Previously approved on November 10, 1982 and now deleted without replacement Rules 616 and 618.

(D) Previously approved on July 31, 1985 in paragraph (c)(124)(ix)(B) of this section and now deleted without replacement, Rule 130 (introductory text, b.1, n1, p5, and s2), and now deleted with replacement in paragraphs (c)(480)(i)(A)(*3*) and (*4*), Rules 220(c) and 230.

(x) Trinity County APCD.

(A) New or amended Rules 616, 618, and 620.

(B) New or amended Rule 230, adopted December 7, 1981.

(C) Previously approved on November 10, 1982 and now deleted without replacement Rules 616 and 618.

(xi) Kern County APCD.

(A) New or amended Rule 411.

(xii) Butte County APCD.

(A) New or amended Rules 4–6 and 4–6A.

(B) Previously approved on June 1, 1983 in paragraph (xii)(A) of this section and now deleted Rules 4–6 and 4–6A.

(125) Revised Regulations for the following APCDs submitted on May 20, 1982 by the Governor's designee.

(i) San Diego County APCD.

(A) New or amended Rule 40.

(ii) South Coast AQMD.

(A) New or amended Rule 431.1.

(B) New or amended Rules 303 and 304.

(C) [Reserved]

(D) Amended Rules 442, 467 and 1128.

(iii) Monterey Bay Unified APCD.

(A) New or amended Rule 422.

(B) New Rule 428.

(iv) Shasta County APCD.

(A) New or amended Rules 2:6, 2:7, 2:8, 2:9, 2:11 and 4:4.

(B) Previously approved on November 10, 1982 and now deleted without replacement Rule 4.4.

(C) Previously approved on November 10, 1982 in paragraph (c)(125)(iv)(A) of this section and now deleted without replacement, Rule 2:11.

(v) Tulare County APCD.

(A) New or amended Rules 104 and 405.

(B) Amended Rule 410.1.

(C) Previously approved on November 10, 1982 in paragraph (c)(125)(v)(A) of this section and now deleted without replacement, Rule 104.

(vi) Yolo-Solano APCD.

(A) New or amended Rules 4.1 and 4.2.

(B) Previously approved on November 10, 1982 and now deleted without replacement Rules 4.1 and 4.2.

(vii) Yuba County APCD.

(A) New or amended Rule 9.6.

(viii) Bay Area AQMD.

(A) Manual of Procedures: Volumes I, V and VI.

(B) Amended Regulation 8, Rules 7, 14, 18 and 19.

(ix) San Joaquin County APCD.

(A) Amended Rule 412.

(126) Revised regulations for the following APCDs submitted on November 8, 1982 by the Governor's designee.

(i) Sacramento County APCD.

(A) New or amended Rules 59 and 70.

(B) Amended Rules 16 and 19.

(C) Previously approved on June 1, 1983 and now deleted without replacement Rule 70.

(ii) Santa Barbara County APCD.

(A) New or amended Rule 210D.

(B) Previously approved on June 1, 1983 in paragraph (c)(126)(ii)(A) of this

section and now deleted without replacement, Rule 210D.

(iii) Stanislaus County APCD.

(A) New or amended Rules 110, 202, and 302.

(B) Amended Rules 409.8, 411 and 411.1(G).

(C) Previously approved on June 18, 1982 and now deleted without replacement Rule 302.

(iv) South Coast AQMD.

(A) New or amended Rules 708.3 and 1105.

(v) Tulare County APCD.

(A) New or amended Rule 519.

(B) Amended Rules 410.3 and 410.4.

(C) Previously approved on June 1, 1983 and now deleted without replacement Rule 519.

(vi) Yolo-Solano County APCD.

(A) New or amended Rule 6.1.

(B) Amended Rule 2.22.

(127) New and amended regulations for the following APCD's submitted on February 3, 1983 by the Governor's designee.

(i) Bay Area Air Quality Management District.

(A) [Reserved]

(B) Amended Regulation 3: Rules 3–102, 3–302, 3–302.1, 3–303, and Schedule A.

(C) Amended Rules 13 and 29.

(D) New or amended Regulation 2: Rules 2–2–113.2, 2–2–115, 2–2–209, 2–2–210, 2–2–211, 2–2–303.2, 2–2–304.1, 2–2–304.2, and 2–2–404; and Regulation 3: Rule 3–312.

(ii) Fresno County APCD.

(A) Amended Rules 406 and 408.

(B) Amended Rule 409.1.

(iii) North Coast Unified AQMD.

(A) New Rule 350.

(B) Previously approved on November 18, 1983 and now deleted without replacement Rule 350.

(iv) Imperial County APCD.

(A) Amended Rule 409.

(B) Amended Rule 424.

(v) Monterey Bay Unified APCD.

(A) New or amended Rule 601.

(B) Amended Rule 301, submitted on February 3, 1983.

(C) Previously approved on August 9, 1985 in paragraph (c)(127)(v)(B) of this section and now deleted without replacement, Rule 301.

(vi) San Luis Obispo County APCD.

(A) Amended Rule 302.

(B) Previously approved on November 18, 1983 and now deleted without replacement Rule 302.

(vii) South Coast AQMD.

(A) New or amended Rules 301.1, 302, 303, and Resolutions 82–23 and 82.35.

(B) New or amended Rules 461, 1102, and 1102.1.

(C) New or amended Rules 301, 304, 401(b) and 1148.

(D) Previously approved on November 18, 1983 and now deleted without replacement Rule 303.

(E) Previously approved on October 19, 1984 and now deleted without replacement for implementation in the Antelope Valley Air Pollution Control District Rule 1148.

(F) Previously approved on November 18, 1983 in paragraph (c)(127)(vii)(A) of this section and now deleted without replacement for implementation in the Antelope Valley Air Pollution Control District and the South Coast Air Quality Management District, Rule 302.

(G) Previously approved on October 19, 1984 in paragraph (c)(127)(vii)(C) of this section and now deleted without replacement for implementation in the Antelope Valley Air Pollution Control District and the South Coast Air Quality Management District, Rule 304.

(H) Previously approved on October 19, 1984 in paragraph (c)(127)(vii)(C) of this section and now deleted without replacement for implementation in the Antelope Valley Air Pollution Control District and the Mojave Desert Air Quality Management District (Riverside County), Rule 304.

(I) Previously approved on November 18, 1983 in paragraph (c)(127)(vii)(A) of this section and now deleted without replacement for implementation in the Antelope Valley Air Pollution Control District and the Mojave Desert Air Quality Management District, Rules 302 and 303.

(viii) Ventura County APCD.

(A) New or amended Rule 41.

(B) Amended Rule 74.2.

(128) The 1982 Ozone Air Quality Plan for the Monterey Bay Region was submitted on December 31, 1982 and January 14, 1983 by the Governor's designee.

(129) The 1982 Ozone Air Quality Plan for Stanislaus County and the 1982 Ozone and CO plan for San Joaquin

County were submitted on December 1, 1982 by the Governor's designee.

(130) The 1982 Ozone Air Quality Plan for Santa Barbara County was submitted on December 31, 1982 by the Governor's designee.

(131) [Reserved]

(132) Revised regulations for the following APCDs submitted on June 28, 1982, by the Governor's designee.

(i) Kern County APCD.

(A) Amended Rule 425.

(B) Previously approved on May 3, 1984 and now deleted without replacement, Rule 425.

(133) The enabling legislation, Chapter 892, Statutes of 1982, (Senate Bill No. 33) for a California motor vehicle inspection and maintenance program and the California Air Resources Board's Executive Order G–125–15 submitted on September 17, 1982 by the Governor's designee.

(134) A schedule to implement the California motor vehicle inspection and maintenance (I/M) program, the California Air Resources Board's Executive Order G–125–33, and local resolutions and requests from the Bay Area Air Quality Management District, Sacramento County APCD, Placer County APCD, Yolo-Solano APCD, San Diego County APCD, South Coast Air Quality Management District and Ventura County APCD to have the State implement the I/M program, submitted on July 26, 1983 by the Governor's designee.

(135) The 1982 Ozone and CO Air Quality Plan for the San Francisco Bay Air Basin was submitted on February 4, 1983 by the Governor's designee.

(136) The 1982 Ozone and CO Air Quality Plan for the San Diego Air Basin was submitted on February 28 and August 12, 1983 by the Governor's designee.

(137) Revised regulations for the following APCDs was submitted on July 19, 1983 by the Governor's designee.

(i) Kern County APCD.

(A) New or amended Rules 301.1 and 302.

(B) Amended Rule 410.1

(C) Previously approved on February 1, 1984 in paragraph (c)(137)(i)(A) of this section and now deleted without replacement, Rules 301.1 and 302 (including Southeast Desert).

(ii) Merced County APCD.

(A) New or amended Rules 104, 108, 113, 202, 209.1, 301, 305, 407 and 519.

(B) Amended Rule 409.1.

(C) New or amended Rules 409.4, 409.5, 411 and 411.1.

(D) Previously approved on February 1, 1984 and now deleted without replacement Rules 305 and 319.

(E) Previously approved on February 1, 1984 in paragraph (c)(137)(ii)(A) of this section and now deleted without replacement, Rules 104, 113, and 301 (paragraphs a, b, and h).

(iii) Sacramento County APCD.

(A) New or amended Rule 7.

(B) Amended Rule 17.

(iv) San Diego County APCD.

(A) New or amended Rules 10 and 40.

(B) Amended Rules 67.3, 67.4 and 67.6.

(C) Previously approved on February 1, 1984 and now deleted without replacement Rule 40.

(v) San Luis Obispo County APCD.

(A) New or amended Rule 212.

(vi) Shasta County APCD.

(A) New or amended Rules 2.18, 3.4, and 3.15.

(B) Amended Rules 3.3(b), 3.4(d) and 3.15(c).

(C) Previously approved on February 1, 1984 in paragraph (c)(137)(vi)(A) of this section and now deleted without replacement Rule 2.18.

(vii) South Coast AQMD.

(A) New or amended Rules 502, 1207 and deletion of 301.1.

(B) New or amended Rules 301, 301.1, 301.2 and 431.1.

(C) Previously approved on February 1, 1984 and now deleted without replacement Rule 502.

(D) Previously approved on February 1, 1984 and now deleted without replacement for implementation in the Antelope Valley Air Pollution Control District Rule 1207.

(E) Previously approved on October 19, 1984 in paragraph (c)(137)(vii)(B) of this section and now deleted without replacement Rules 301, 301.1, and 301.2.

(F) Previously approved on October 19, 1984 in paragraph (c)(137)(vii)(B) of this section and now deleted without replacement for implementation in the Antelope Valley Air Pollution Control District, Rules 301 to 301.2.

(G) Previously approved on February 1, 1984 in paragraph (c)(137)(vii)(A) of

this section and now deleted without replacement for implementation in the Mojave Desert Air Quality Management District (Riverside County) Rule 1207.

(H) Previously approved on February 1, 1984 in paragraph (c)(137)(vii)(A) of this section and now deleted without replacement for implementation in the South Coast Air Quality Management District Rule 1207.

(viii) Ventura County APCD.

(A) Amended Rule 41.

(B) Previously approved on February 1, 1984 and now deleted without replacement Rule 41.

(ix) Monterey Bay Unified APCD.

(A) Amended Rule 426.

(x) Placer County APCD (Mountain Counties Air Basin portion).

(A) Amended Rule 218.

(xi) Fresno County APCD.

(A) Amended Rule 409.4.

(138) Revised regulations for the following APCDs was submitted on April 11, 1983 by the Governor's designee.

(i) Butte County APCD.

(A) Amended Rules 1–36, 4–2, 4–3, 4–11, and 5–3.

(B) Previously approved on November 18, 1983 in paragraph (i)(A) of this section and now deleted without replacement Rules 4–3 and Rule 4–11.

(C) Previously approved on November 18, 1983 in paragraph (c)(138)(i)(A) of this section and now deleted without replacement, Rules 4–2, 4–11, and 5–3.

(ii) El Dorado County APCD.

(A) New or amended Rules 203, 206, 207, 209–212, 221–226, 521, 609–612 and 700–703.

(B) Amended Rules 214–220.

(C) New Rule 213.

(D) Previously approved on November 18, 1983 and now deleted without replacement Rule 521.

(E) Previously approved on November 18, 1983 in paragraph (c)(138)(ii)(A) of this section and now deleted without replacement, Rules 609 to 612 (Mountain Counties Air Basin).

(F) Previously approved on November 18, 1983 in paragraph (c)(138)(ii)(A) of this section and now deleted without replacement Rules 700, 702, and 703 (Mountain Counties Air Basin).

(iii) Fresno County APCD.

(A) New or amended Rule 301.

(B) Previously approved on November 18, 1983 in paragraph (c)(138)(iii)(A) of this section and now deleted without replacement, Rule 301.

(iv) Lake County APCD.

(A) New or amended Rules 900 and 902.

(B) Previously approved on November 18, 1983 in paragraph (c)(138)(iv)(A) of this section and now deleted without replacement, Rules 900 and 902.

(v) Madera County APCD.

(A) New or amended Rules 103–117, 301–305, 401–405, 421–425, 501–503, 519, 606, 610 and 611.

(B) Amended Rules 409, 410, and 417–419.

(C) New or amended Rules 406, 407, 408, 411 and 420.

(D) Previously approved on November 18, 1983 and now deleted without replacement Rules 305 and 502 to 503.

(E) Previously approved on November 18, 1983 in paragraph (c)(138)(v)(A) of this section and now deleted without replacement, Rules 105, 108, 111, and 301 to 304.

(vi) Monterey Bay Unified APCD.

(A) New or amended Rules 200, 201(p), 501, 503, 506, 507 and 508.

(B) Amended Rule 425.

(vii) Ventura County APCD.

(A) New or amended Rule 59c.

(viii) Kern County APCD.

(A) Amended Rule 414.1.

(ix) Kings County APCD.

(A) Amended Rule 410.1.

(139) Amendments to ''Chapter 27—California Lead Control Strategy'' was submitted on April 8, 1983 by the Governor's designee.

(140) Revised regulations for the following APCDs were submitted on August 30, 1983 by the Governor's designee.

(i) Bay Area AQMD.

(A) Amended Regulation 3: Rules 3–100 through 3–103, 3–200 through 3–211, 3–300 through 3–313 and 3–400 through 3–409.

(B) New Regulation 8, Rule 30.

(C) Previously approved on May 3, 1984 and now deleted without replacement Rule 3–301.

(D) Previously approved on May 3, 1984 in paragraph (c)(140)(i)(A) of this section and now deleted without replacement, Regulation 3: Rules 3–100 through 3–103, 3–200 through 3–211, 3–

300, 3–302 through 3–313, and 3–400 through 3–409.

(ii) Kern County APCD.

(A) New or amended Rules 405, 408, 409, and 424.

(B) Previously approved on May 3, 1994 and now deleted without replacement for implementation in the Southeast Desert Air Basin, Rule 408.

(C) Previously approved on May 3, 1984 and now deleted without replacement for implementation in the Southeast Desert Air Basin Rule 424.

(iii) Stanislaus County APCD.

(A) New or amended Rules 109 and 213.

(B) Amended Rule 409.1.

(C) Previously approved on May 3, 1984 in paragraph (c)(140)(iii)(A) of this section and now deleted without replacement, Rule 109.

(iv) Yolo-Solano APCD.

(A) Amended Rule 2.13(1).

(141) The 1982 CO Air Quality Plan for the Lake Tahoe Air Basin was submitted on December 20, 1982 by the Governor's designee.

(142) The 1982 ozone and CO Air Quality Plan for the Sacramento nonattainment area submitted on January 10, 1984 by the Governor's designee, except for the attainment and RFP demonstration portions of the ozone plan.

(143) Revisions to the 1982 ozone and CO Air Quality Plan for the Sacramento nonattainment area submitted on February 10, 1984.

(144) The 1982 Ozone and CO Air Quality Management Plan for the South Coast Air Basin submitted on December 31, 1982 and subsequently amended on February 15, and June 28, 1984 by the Governor's designee, except for:

(i) The attainment and RFP demonstration portions of the plan.

(ii) The emission reduction credit for the New Source Review control measure.

(145) The 1982 Ozone Air Quality Management Plan for Ventura County submitted on December 31, 1982 by the Governor's designee except for the attainment and RFP demonstration portions of the plan.

(146) The 1982 Ozone and CO Clean Air Plan for the Fresno nonattainment area submitted on December 1, 1982 by the Governor's designee, except for the attainment and RFP demonstration portions of the plans.

(147) [Reserved]

(148) Revised regulations for the following APCDs were submitted on October 27, 1983 by the Governor's designee.

(i) Bay Area AQMD.

(A) New or amended Regulations 6–303.4, 9–1–100, 9–1–101, 9–1–110, 9–1–200 through 9–1–205, 9–1–300 through 9–1–312, 9–1–400 through 9–1–404, 9–1–500 through 9–1–503, 9–1–600 through 9–1–605 and 5–401.13.

(B) Amended Regulation 8, Rules 3, 9, 10, 20, 22, 25 and 28.

(ii) El Dorado County APCD.

(A) New or amended Rules 102, 226, 227, and 228.

(B) New Rules 224 and 225.

(C) Previously approved on May 3, 1984 in paragraph (c)(148)(ii)(A) of this section and now deleted without replacement, Rule 226.

(iii) Monterey Bay Unified APCD.

(A) New or amended Rules 407, 410, and 411.

(B) Previously approved on May 3, 1984 in (c)(148)(iii)(A) of this section and now deleted without replacement Rule 407.

(iv) San Diego County APCD.

(A) New or amended Rule 68.

(B) New Rule 67.9.

(v) Shasta County APCD.

(A) New or amended Rule 2.6.

(vi) South Coast AQMD.

(A) New or amended Rules 1105 and 1111.

(B) New or amended Rules 1113, 1122, 1136, 1141 and 1145.

(vii) Ventura County APCD.

(A) New or amended Rule 30.

(viii) Madera County APCD.

(A) Amended Rule 416.

(149) Revised regulations for the following APCD's submitted on January 20, 1983 by the Governor's designee.

(i) California State.

(A) New or amended California statewide regulations: Test Procedures for Determining the Efficiency of Gasoline Vapor Recovery Systems at Service Stations; Certification and Test Procedures for Vapor Recovery Systems of Gasoline Delivery Tanks; Test Procedure for Gasoline Vapor Leak Detection Using Combustible Gas Detector.

(150) Revised regulations for the following APCD's submitted August 2, 1983, by the Governor's designee.

(i) Kings County APCD.

(A) New Rule 414.4.

(ii) Yuba County APCD.

(A) Amended Rule 3.9.

(151) [Reserved]

(152) Amendments to ''Chapter 27—California Lead Control Strategy'' were submitted on February 22, 1984 by the Governor's designee.

(153) Revised regulations for the following APCD's were submitted on March 14, 1984 by the Governor's designee.

(i) Lake County APCD.

(A) New or amended Rule 602.

(ii) North Coast Unified AQMD.

(A) New or amended Rules 100, 120, 130 [Paragraphs (d1) and (s5)], 160 (except (a) and non-criteria pollutants), 240, 500, 520, 600, 610 and Appendix B (except (D)(1)(e)).

(B) New or amended Rules, 130, 130 (b1, m2, n1, p5, s2), 200 (a), (b), (c)(1–2), and (d), 220(c), and 260.

(C) Previously approved on December 5, 1984 and now deleted without replacement Rules 600 and 610.

(D) Previously approved on December 5, 1984 in paragraph (c)(153)(ii)(A) of this section and now deleted without replacement, Rules 500 and 520.

(iii) San Diego APCD.

(A) New or amended Rules 2, 52 and 53.

(B) Amended Rules 67.0 and 67.1 (deletion).

(iv) San Joaquin APCD.

(A) New or amended Rules 110, 202 and 407.

(B) Amended Rules 409.1 and 409.4.

(v) Bay Area AQMD.

(A) New Regulation 8, Rules 31 and 32.

(vi) Kern County APCD.

(A) Amended Rule 410.1.

(vii) South Coast AQMD.

(A) New or amended Rules 1108.1 and 1141.1.

(B) New Rule 1158, adopted 12–2–83.

(C) Previously approved on March 14, 1984 in paragraph (c)(153)(vii)(B) of this section and now deleted without replacement for implementation in the Antelope Valley Air Quality Management District Rule 1158.

(viii) Ventura County APCD.

(A) Amended Rule 74.2

(154) Revised regulations for the following APCD's were submitted on April 19, 1984 by the Governor's designee.

(i) Mendocino County APCD.

(A) New or amended Regulation 1: Rules 100, 120, 130 [Paragraphs (d1) and (s5)], 160 (except (a) and non-criteria pollutants), 240, 500, 520, 600, 610 and Appendix B (except (D)(1)(e)) and Regulation 2: Rules 101, 102, 200, 301, 302, 303, 304, 305, 401, 501, and 502.

(B) New or amended Rules, 130, 200, 220(a)(1&3), (b)(1, 2, 5, and 7), (c), and 260.

(C) Previously approved on December 5, 1984 and now deleted without replacement Rules 600 and 610.

(D) Previously approved on December 5, 1984 in paragraph (c)(154)(i)(A) of this section and now deleted without replacement, Rules 500, 520, and Regulation 2: Rule 502.1.

(ii) Monterey Bay Unified APCD.

(A) New or amended Rules 101, 200, 203 and 422.

(B) Amended Rule 426.

(iii) Sacramento County APCD.

(A) New or amended Rules 101, 102, 103, 403–410, 420, 501, 601, 602 and 701.

(B) Amended Rules 441, 442, 444–446 and 448–455.

(C) Previously approved on December 5, 1984 and now deleted without replacement Rules 601 and 602.

(D) Rule 455, previously approved on January 24, 1985 in paragraph (c)(154)(iii)(B) of this section, is deleted with replacement in (c)(488)(i)(C)(*1*).

(iv) San Luis Obispo County APCD.

(A) New or amended Rule 105.

(v) Shasta County APCD.

(A) New or amended Rules 1:2, 2:2 (repealed), 2:3 (repealed), 2:6 2:26 (repealed), 2:27 (repealed), and 3:2.

(B) Amended Rule 3:4, adopted on January 3, 1984.

(vi) Bay Area AQMD.

(A) New or amended Regulation 8, Rules 6, 7, 29 and 33.

(B) Amended Regulation 9, Rule 4 adopted December 7, 1983.

(vii) South Coast AQMD.

(A) Amended Rule 1124.

(B) [Reserved]

(155) Revised regulations for the following APCD's submitted July 10, 1984, by the Governor's designee.

(i) Bay Area AQMD.

(A) New or amended Regulation 8, Rules 11, 34 and 35.

(ii) El Dorado County APCD.

(A) New or amended Rules 215, 216 (deletion), 216 and 217 (deletion).

(B) New or amended Rule 217.

(iii) Madera County APCD.

(A) New or amended Rules 409 and 410.

(B) New or amended Rules 203 and 404.

(iv) South Coast AQMD.

(A) Amended Rule 1113.

(B) New or amended Rules 401 and 1305.

(v) North Coast Unified AQMD.

(A) New or amended Regulation 2.

(B) New or amended Rules 130 (b2, m1, p3, and s7), Chapter II, 200 (c)(3–6) and 220 (a) and (b).

(C) Previously approved on January 29, 1985 in paragraph (c)(155)(v)(A) of this section and now deleted without replacement, Regulation 2: Rule 502.

(D) Previously approved on January 29, 1985 in paragraph (c)(155)(v)(A) of this section and now deleted without replacement Regulation 2, Rule 2–502.

(vi) Shasta County APCD.

(A) Amended Rule 1:2.

(156) Revised regulations for the following APCD's were submitted on October 19, 1984 by the Governor's designee.

(i) Bay Area AQMD.

(A) New or amended Rules 2–1 and 8–36.

(ii) Merced County APCD.

(A) New or amended Rules 112, 409.1, and 409.4.

(B) Previously approved on January 29, 1985 in paragraph (c)(156)(ii)(A) of this section and now deleted without replacement, Rule 112.

(iii) North Coast Unified AQMD.

(A) New or amended Rules 160 and 460.

(B) Amended Rules 130(c, 1) and 240(e).

(iv) San Diego County APCD.

(A) New or amended Rules 61.0, 61.2, 61.8, and 67.3.

(v) Yolo-Solano APCD.

(A) New or amended Rule 2.21.

(vi) Northern Sonoma County APCD.

(A) New or amended Rules 130 (b2, m1, p3, p3a, and s7), Chapter II, 220(B).

(B) Previously approved on July 31, 1985 in paragraph (c)(156)(vi)(A) of this section and now deleted without replacement, Rule 130 (b2, m1, p3, p3a, and s7), and now deleted with replacement in Paragraph (c)(480)(i)(A)(*3*) of this section, Chapter II, 220(B).

(vii) South Coast AQMD.

(A) New or amended Rule 463, adopted 6–1–84 and 1141.2, adopted 7–6–84.

(B) Previously approved on January 15, 1987 in paragraph (c)(156)(vii)(A) of this section and now deleted without replacement for implementation in the Antelope Valley Air Quality Management District Rule 1141.2.

(157) [Reserved]

(158) Revised regulations for the following Districts were submitted on December 3, 1984 by the Governor's designee.

(i) Mendocino County APCD.

(A) New or amended Rules 1–160, 1–240, 1–460 and 2–502.2.

(B) New or amended Rules 130 (b2, m1, p3, s7), Chapter II, 220 (a)(2) and (b)(3, 4, 6, 8 and 9).

(C) Previously approved on May 9, 1985 in paragraph (c)(158)(i)(A) of this section and now deleted without replacement, Rule 2–502.2.

(D) Previously approved on July 31, 1985 in paragraph (c)(158)(i)(B) of this section and now deleted with replacement in paragraph (c)(489)(i)(A)(*3*) of this section, Chapter II, 220 (a)(2) and (b)(3, 4, 6, 8 and 9).

(159) Revised regulations for the following APCD's were submitted on February 6, 1985 by the Governor's designee.

(i) Sacramento County APCD.

(A) Amended Rule 202 (except for a) sections 104 and 105 as they apply to volatile organic compounds and nitrogen oxides, b) sections 109 and 229, and c) the portion of section 405 which concerns stack heights [under NSR]).

(B) Previously approved on February 6, 1985 and now deleted without replacement: Rule 202.

(ii) Fresno County APCD.

(A) New or amended Rules 409.7 and 413.1, adopted on October 2, 1984.

(iii) Monterey Bay Unified APCD.

(A) New or amended Rules 100 to 106, 200 to 206, 208 to 214, 400, 401, 405, 406, 408 to 415, 417 to 422, 425 to 428, 500 to 506, 600 to 617, 700 to 713, 800 to 816, and 900 to 904, adopted on December 13, 1984.

(B) Previously approved on July 13, 1987 and now deleted without replacement Rules 600 to 617 and 800 to 816.

(C) Previously approved on July 13, 1987 in (c)(159)(iii)(A) of this section and now deleted without replacement Rules 405 and 406.

(D) Previously approved on July 13, 1987 in paragraph (c)(159)(iii)(A) of this section and now deleted without replacement, Rule 104.

(E) Previously approved on July 13, 1987 in (c)(159)(iii)(A) of this section and now deleted without replacement, Rule 209.

(F) Previously approved on July 13, 1987 in (c)(159)(iii)(A) of this section and now deleted without replacement Rules 409, 410, 411, and 422.

(G) Previously approved on July 13, 1987 in paragraph (c)(159)(iii)(A) of this section and now deleted without replacement Rules 203, 210, and 211.

(H) Previously approved on July 13, 1987 in (c)(159)(iii)(A) of this section and now deleted without replacement Rules 900, 901, 902, 903, and 904.

(iv) Sacramento County APCD.

(A) New or amended Rules 201 (sections 100–400), 404 (sections 100–300), and 443 (sections 100–400), adopted on November 20, 1984.

(B) Amended Rule 447 adopted November 20, 1984.

(v) South Coast AQMD.

(A) New or amended Rules 1104 and 1125, adopted on December 7, 1984.

(B) Amended Rule 1141, adopted on November 2, 1984.

(C) Amended Rule 1105 adopted September 21, 1984.

(D) New Rule 1117 adopted January 6, 1984.

(E) Previously approved on July 12, 1990 and now deleted without replacement for implementation in the Antelope Valley Air Pollution Control District Rules 1105 and 1117.

(vi) Stanislaus County APCD.

(A) New or amended Rules 202(O), 411, and 416.1, adopted on September 18, 1984.

(vii) Yolo-Solano County APCD.

(A) Amended Rule 2.21.a.7. (a) and (b) adopted November 21, 1984.

(160) Revised regulations for the following APCD's were submitted on April 12, 1985, by the Governor's designee.

(i) *Incorporation by reference.* (A) Bay Area AQMD.

(*1*) Revisions to Regulation 8, Rule 33, adopted on January 9, 1985.

(B) San Luis Obispo County APCD.

(*1*) New or amended Rules 201, 205, 405, and 406, adopted on November 13, 1984.

(C) Shasta County APCD.

(*1*) Amended Rule 2:1.514, adopted on May 29, 1984.

(D) San Diego County APCD.

(*1*) New Rule 67.10 adopted January 30, 1985.

(E) South Coast AQMD.

(*1*) Amended Rule 1108 adopted February 1, 1985.

(161) Revisions to the ozone and carbon monoxide nonattainment area plans for the Fresno County portion of the San Joaquin Valley Air Basin were submitted by the Governor on June 11, 1984.

(i) *Incorporation by reference.* (A) State of California Air Resources Board Executive Order G–125–46 adopted May 11, 1984.

(B) Letters from the County of Fresno to the Bureau of Automotive Repair dated March 14, 1984 and February 14, 1984 requesting implementation of an I/M program in Fresno County.

(C) County of Fresno Resolution File Number 18–13 adopted February 14, 1984.

(D) Schedule to implement I/M in Fresno County, adopted on February 14, 1984.

(ii) *Additional information.* The State submitted no additional information.

(162) Revised regulations for the following APCD were submitted on June 21, 1985 by the Governor's designee.

(i) Northern Sonoma County APCD.

(A) Amended Rule 220 (a).

(B) Previously approved on July 31, 1985 in paragraph (c)(162)(i)(A) of this section and now deleted with replacement in Paragraph (c)(480)(i)(A)(*3*) of this section, Chapter II, 220(A).

(163) Rule 1304(e), Resource Conservation and Energy Projects, adopted on March 7, 1980, submitted on April 3, 1980 (See § 52.220(c)(68)(i)), and conditionally approved on January 21, 1981 [See § 52.232(a)(3)(i)(A)] is disapproved but only with respect to projects whose application for a permit is complete after January 1, 1986.

(164) Revised regulations for the following APCD's were submitted on October 16, 1985 by the Governor's designee.

(i) *Incorporation by reference.* (A) Amador County APCD.

(*1*) New or amended Rules 301–319 and 501, adopted 6/16/81; and Rules 502–514 and 517–521, adopted 1/8/80.

(*2*) Previously approved on April 17, 1987 in paragraph (c)(164)(i)(A)(*1*) of this section and now deleted without replacement, Rules 318, 319, and 509.

(*3*) Previously approved on April 17, 1987 in paragraph (c)(164)(i)(A)(*1*) of this section and now deleted without replacement Rules 504, 506, 519, and 520.

(B) Northern Sonoma County APCD.

(*1*) Amended Rules 100, 120, 130 (d1 and s5), 500, 520, 600, and 610, adopted 2/22/84, and amended Rule 200(a), adopted 7/19/83.

(*2*) Appendices A and B adopted on February 22, 1984.

(*3*) Previously approved on April 17, 1987 in paragraph (c)(164)(i)(B)(*1*) of this section and now deleted without replacement, Rules 500 and 520.

(*4*) Rule 240, ''Permit to Operate,'' adopted on February 22, 1984.

(*5*) Previously approved on April 17, 1987 in paragraph (c)(164)(i)(B)(1) of this section and now deleted without replacement, Rule 130 (d1 and s5), and now deleted with replacement in paragraph (c)(480)(i)(A)(*2*) of this section, rule 200(a).

(C) Ventura County APCD.

(*1*) Amended Rules 15, 54, 61, 64, 67, 69, 70, 74.3, 74.4, 74.5, 74.6, 74.8, 80, and 103, revised 7/5/83.

(*2*) Previously approved and now removed (without replacement), Rule 84.

(*3*) Previously approved on April 17, 1987 and now deleted without replacement Rule 61.

(*4*) Rule 74.11 adopted on April 9, 1985.

(*5*) Previously approved on April 17, 1987 in paragraph (c)(164)(i)(C)(*1*) of this section and now deleted without replacement, Ventura County Rule 67.

(D) Yuba County APCD.

(*1*) Amended Rules 1.1, 2.0, 2.1, 2.3, 2.5, 2.6, 2.7, 2.9, 2.11, and 2.16, adopted 3/5/85.

(E) South Coast Air Quality Management District.

(*1*) Rule 1150.1, adopted on April 5, 1985.

(165) Revised regulations for the following APCD's were submitted by the Governor's designee on November 12, 1985.

(i) *Incorporation by reference.* (A) Northern Sonoma County APCD.

(*1*) Amended Rule 130 s4, adopted 7/9/85.

(*2*) Previously approved on April 17, 1987 in paragraph (c)(165)(i)(A)(*1*) of this section and now deleted without replacement, Rule 130 (s4).

(B) South Coast Air Quality Management District.

(*1*) Amended Rule 221, adopted 1/4/85.

(*2*) Rule 1140, ''Abrasive Blasting,'' amended on August 2, 1985.

(166) A revised regulation for the following district was submitted on December 2, 1983, by the Governor's designee.

(i) *Incorporation by reference.* (A) South Coast AQMD.

(1) Amended Rule 466 adopted 10/7/83.

(167) A revised regulation for the following district was submitted on August 1, 1984, by the Governor's designee.

(i) *Incorporation by reference.* (A) Ventura County APCD.

(1) Amended Rule 74.7 adopted 7–3–84.

(168) Revised regulations for the following APCD's were submitted by the Governor's designee on February 10, 1986.

(i) *Incorporation by reference.* (A) Butte County APCD.

(*1*) New or amended Rules 101, 102, 250, 260, 261, 270, 301, 302, 303, 304, 306, 307, 308, 309, 310, 311, 312, 313, 314, 315, 316, 317, 318, 320, 322, 323, 324, 325, 401, 402, 403, 405, 406, 407, 420, 421, 422, 423, 425, 601, 602, 603, 604, 605, 606, 607, 608, 609, 610, 611, 612, 613, 614, 615, 616, 617, 618, 619, 620, 621, 701, 702, 703, 704, 801, 802, 901, 902, and 3–3 (repealed), adopted August 6, 1985.

(*2*) New or amended Rules 202, 203, 204, 205, 210, 211, 212, 213, 214, 215, 220, 225, and 231 adopted August 6, 1985.

(*3*) Previously approved on February 3, 1987 and now deleted without replacement Rules 601 to 618, 620 to 621, and 801 to 802.

(*4*) Rule 424, adopted on August 6, 1985.

(*5*) Previously approved on February 3, 1987 in paragraph (c)(168)(i)(A)(*1*) of this section and now deleted without

replacement, Rules 701, 702, 703, and 902.

(*6*) Previously approved on February 3, 1987 in paragraph (c)(168)(i)(A)(*1*) of this section and now deleted without replacement Rules 423 and 425.

(*7*) Previously approved on February 3, 1987 in paragraph (c)(168)(i)(A)(*1*) of this section and now deleted with replacement in paragraph (c)(457)(i)(C)(*1*): Rule 101 ''Title'' and Rule 102 ''Definitions'', except for the following definitions from existing SIP BCAPCD Rule 102: ''approved ignition devices,'' ''open out-door fire'', ''permissive burn day,'' ''range improvement burning,'' ''submerged fill pipe,'' and ''vapor recovery system.''.

(*8*) Previously approved on February 3, 1987 in paragraph (c)(168)(i)(A)(*1*) of this section and now deleted with replacement in paragraph (c)(457)(i)(C)(*2*): Rule 401 ''General Requirements,'' Rule 402 ''Authority to Construct,'' Rule 406 ''Emission Calculations,'' Rule 407 ''Anniversary Date,'' Rule 420 ''Standards for Granting Applications,'' and Rule 421 ''Conditional Approval''.

(*9*) Previously approved on May 2, 2001 in paragraph (c)(168)(i)(A)(*4*) of this section and now deleted with replacement in paragraph (c)(457)(i)(C)(*2*): Rule 424 ''State Implementation Plan.''

(B) Lake County APCD.

(*1*) New Rules 650D, 651, and 1701Q, adopted December 10, 1985.

(C) Placer County APCD (Mountain Counties portion).

(*1*) Amended Rules 102, 312, 314, 315, 320, 505, 507, 803, 211A (repealed), and 219M (repealed), adopted May 20, 1985.

(*2*) New or amended Rules 213, 307, and 324 adopted May 20, 1985.

(*3*) Previously approved on February 3, 1987 in paragraph (c)(168)(i)(C)(*1*) of this section and now deleted without replacement, Rule 803.

(D) Sutter County APCD.

(*1*) Amended Rule 2.5, adopted October 15, 1985.

(E) Tehama County APCD.

(*1*) Amended Rules 2.12, 2.13, 2.14, 2.15, 2.16, 2.17, 5.2, 5.3, 5.6, 5.7, 5.8, 5.9, 5.10, 5.11, 5.12, 5.13, 5.15, 5.16, 5.17, 5.18, 5.20, 5.21, 5.22, and 5.23, adopted September 19, 1985.

(*2*) New or amended Rules 4.3, 4.8, 4.9 (a) and (b), 4.10, and 4.14 adopted September 10, 1985.

(*3*) Previously approved on February 3, 1987 and now deleted without replacement Rules 5.2 to 5.3, 5.6 to 5.9, 5.11 to 5.12, 5.13, 5.15 to 5.18, and 5.20 to 5.23.

(*4*) Previously approved on February 3, 1987 in paragraph (c)(168)(i)(E)(*1*) of this section and now deleted without replacement Rules 2.12 and 5.10.

(F) Monterey Bay Unified APCD.

(*1*) New or amended Rules 416 and 418 adopted September 18, 1985.

(*2*) Rule 204, amended on July 17, 1985.

(G) San Diego County APCD.

(*1*) New or amended Rules 66 (w) and 67.8 (d) adopted September 17, 1985.

(H) South Coast AQMD.

(*1*) Amended Rule 1159 adopted December 6, 1985.

(*2*) Rule 1150.2, adopted on October 18, 1985.

(*3*) Previously approved on July 12, 1990 in paragraph (i)(H)(*1*) of this section and now deleted without replacement for implementation in the Antelope Valley Air Pollution Control District Rule 1159.

(169) New and amended regulations submitted on June 4, 1986 by the Governor's designee.

(i) *Incorporation by reference.* (A) South Coast Air Quality Management District.

(*1*) Rules 404 and 405 adopted on May 7, 1976 and amended on February 7, 1986. Rule 1112.1 adopted on February 7, 1986.

(170) Revised regulations for the following APCD's were submitted on August 12, 1986, by the Governor's designee.

(i) *Incorporation by reference.* (A) Placer County Air Pollution Control District.

(*1*) Amended rules 101, 201, 305 (Mountain Counties portion), adopted May 27, 1986.

(171) Revised regulations for the following APCD's were submitted on November 21, 1986 by the Governor's designee.

(i) *Incorporation by reference.* (A) [Reserved]

(B) Placer County APCD.

(*1*) New Rule 225, adopted on June 17, 1986.

(C) San Joaquin County APCD.

(*1*) Amended Rules 411.2, 416, and 416.1, adopted on June 24, 1986.

(D) Shasta County APCD.

(*1*) New or amended Rules 1:1, 1:2 (except ''fugitive emissions''), 2:10, 2:23, 2:26, 2:27, 3:2, 3:3, 4:1, 4:2, and 4:7 adopted on July 22, 1986.

(*2*) Previously submitted to EPA on June 30, 1972 and approved in the FEDERAL REGISTER on September 22, 1972 and now removed without replacement, Rule 2:13.

(*3*) Previously submitted to EPA on July 19, 1974 and approved in the FEDERAL REGISTER on August 22, 1977 and now removed without replacement, Rules 3:8, 4:7, 4:9, 4:10, 4:11, 4:12, 4:13, 4:15, 4:16, 4:17, 4:18, 4:20, 4:21, and 4:22.

(*4*) Previously submitted to EPA on October 13, 1977 and approved in the FEDERAL REGISTER on November 14, 1978 and now removed without replacement, Rules 4:14 and 4:19.

(*5*) Previously approved on April 12, 1989 and now deleted without replacement Rule 4.1.

(*6*) Previously approved on April 12, 1989 in paragraph (c)(171)(i)(D)(*1*) of this section and now deleted without replacement Rules 2:10, 2:26, 2:27, and 4:7.

(172) Revised regulations for the following APCD's were submitted on March 11, 1987, by the Governor's designee.

(i) *Incorporation by reference.* (A) Siskiyou County APCD.

(*1*) New or amended Rules 1.1, 1.2 (A3, A4, A8, A9, B3, B4, C1, C5, C6, C8, C10, D1, D2, E1, F1, H2, I2, I3, M3, M4, O1, P1, P3, P4, P8, R3, R4, R6, S1, S2, S3, S5, S6, T2, V1), 1.3, 1.5, 2.3, 2.7, 2.8, 2.9, 2.10, 2.11, and 2.12 adopted on November 25, 1986.

(*2*) Previously submitted to EPA on February 21, 1972 and approved in the FEDERAL REGISTER on May 31, 1972 and now removed without replacement, Rule 1.2 (M).

(*3*) Previously submitted to EPA on July 25, 1973 and approved in the FEDERAL REGISTER on August 22, 1977 and now removed without replacement, Rule 2.13.

(*4*) Previously approved on April 12, 1989 in paragraph (c)(172)(i)(A)(*1*) of this section and now deleted without replacement Rules 2.8 and 2.9.

(B) Ventura County APCD.

(*1*) Amended Rule 23, adopted on October 21, 1986.

(173) Revised regulations for the following APCD's were submitted on June 9, 1987 by the Governor's designee.

(i) *Incorporation by reference.* (A) Bay Area AQMD.

(*1*) New Rules 2–1–401.6 and 2–1–401.7, adopted January 7, 1987.

(B) Imperial County APCD.

(*1*) New or amended Rules 102, 105, 108, 110, 113, 115, 203, 204, 205, 210, 401, 402, 403, 420, 421, 422, and 423, adopted November 19, 1985.

(*2*) Previously approved on February 3, 1989 in paragraph (c)(173)(i)(B)(*1*) of this section and now deleted without replacement, Rules 105 and 108.

(*3*) Previously approved on February 3, 1989 in paragraph (c)(173)(i)(B)(*1*) of this section and now deleted without replacement Rules 204 and 210.

(C) Monterey Bay Unified APCD.

(*1*) Amended Rule 201 (introductory paragraph and subparagraphs (1) through (8.6)), adopted December 17, 1986.

(*2*) Rule 200, amended on December 17, 1986.

(D) Tulare County APCD.

(*1*) Amended Rules 110 and 202 (introductory paragraph and subparagraphs (a) through (d.7)), adopted May 13, 1986.

(*2*) Previously approved on February 3, 1989 in paragraph (c)(173)(i)(D)(*1*) of this section and now deleted without replacement, Rule 110.

(E) San Diego County Air Pollution Control District.

(*1*) Amended Rules 61.7 and 61.8, adopted on January 13, 1987.

(F) South Coast Air Quality Management District.

(*1*) Rule 443.1, adopted on December 5, 1986.

(174) Revised regulations for the following APCD's were submitted on September 1, 1987 by the Governor's designee.

(i) *Incorporation by reference.* (A) South Coast AQMD.

(*1*) Amended Rule 212, adopted May 1, 1987.

(B) Ventura County APCD.

(*1*) Amended Rule 12, adopted June 16, 1987.

(175) Revised regulations for the following APCD's were submitted on November 25, 1987, by the Governor's designee.

(i) *Incorporation by reference.* (A) Shasta County AQMD.

(*1*) Amended rules 1:2, 2:6.a.4.(c), 2:6.b, 2:7.a, 2:7.c, 2:8.c.2.(a), 2:8.c.3.(a), 2:8.c.4, and 2:19, adopted on July 28, 1987.

(*2*) Previously approved on April 17, 1989 in paragraph (c)(175)(i)(A)(*1*) of this section and now deleted without replacement Rule 2:19.

(B) Tehama County APCD.

(*1*) New or amended rules 1:2, 3:1, 3:6(1), 3:11(a), 3:12, 3:13.j, 3:14(10), 3:15, 4:3, and 4:24, adopted on August 4, 1987.

(*2*) Rule 4.22, adopted on August 4, 1987.

(*3*) Previously approved on April 17, 1989 in paragraph (c)(175)(i)(B)(*1*) of this section and now deleted without replacement Rule 3:15.

(C) Yolo-Solano APCD.

(*1*) Amended rule 3:7(d), adopted on August 12, 1987.

(176) Revised regulations for the following APCD's were submitted on March 23, 1988 by the Governor's designee.

(i) *Incorporation by reference.* (A) Siskiyou County Air Pollution Control District.

(*1*) New and amended rules 4.1, 4.1–1, 4.1–2, 4.2–1, 4.3, 4.4, 4.5, 4.6, 4.6–1, 4.7, 4.8, 4.9, 4.10, 4.11, 7.1, 7.2, 7.3, 7.4, 7.5–1, 7.5–2, 7.5–3, 7.6, and 7.7 adopted on October 27, 1987.

(B) Lake County Air Pollution Control District.

(*1*) Amended rules 431.5, 431.7, 432, 432.5, 433, 434, 436.5, 442, 1105, and 1107 adopted October 20, 1987.

(*2*) Previously approved on October 23, 1989 in paragraph (c)(176)(i)(B)(*1*) of this section and now deleted Section 442 (now replaced by Section 436).

(C) Lassen County Air Pollution Control District.

(*1*) Amended Articles I, II, III, IV, V, VI, and VII adopted August 11, 1987.

(D) Monterey Bay Unified Air Pollution Control District.

(*1*) Rule 429 adopted on September 16, 1987.

(E) South Coast Air Quality Management District.

(*1*) Rule 444, adopted on October 2, 1987.

(177) Revised regulations for the following APCD's were submitted by the Governor's designee on February 7, 1989.

(i) *Incorporation by reference.* (A) Ventura County Air Pollution Control District.

(*1*) Amended Rules 2 and 55 adopted May 24, 1988.

(*2*) Amended Rule 56 adopted May 24, 1988.

(*3*) Previously approved on August 6, 1990 in paragraph (c)(177)(i)(A) of this section and now deleted without replacement, Rule 55.

(B) Bay Area Air Quality Management District.

(*1*) Amended Regulation 4 adopted September 7, 1988.

(C) Mariposa County Air Pollution Control District.

(*1*) Amended Regulation III and Rules 300, 301, 302, 303, 304, 305, 306, 307, and 308 adopted July 19, 1988.

(D) Madera County Air Pollution Control District.

(*1*) Amended rules 106, 112, 114, 401, 403, 422, 424, 425, 501, 504, 505, 506, 518, 519, 601, 603, 605, 606, 609, 610, 611, 613, and 614 adoped on January 5, 1988.

(*2*) Previously approved on April 16, 1991 and now deleted without replacement Rules 106, 501, 504 to 506, and 519.

(*3*) Previously approved on April 16, 1991 in paragraph (c)(177)(i)(D)(*1*) of this section and now deleted without replacement, Rule 112.

(*4*) Previously approved on April 16, 1991 in paragraph (c)(175)(i)(D)(*1*) of this section and now deleted without replacement Rule 518.

(E) Bay Area Air Quality Management District.

(*1*) Rule 8–5 adopted on May 4, 1988.

(F) Lake County Air Quality Management District.

(*1*) Rules 248.5 and 270, adopted on December 6, 1988.

(*2*) Section (Rule) 1150, adopted on December 6, 1988.

(178) [Reserved]

(179) Revised regulations for the following APCD's were submitted on March 26, 1990, by the Governor's designee.

(i) *Incorporation by reference.* (A) Kings County Air Pollution Control District.

(*1*) Amended Rules 417 and 417.1 adopted on February 28, 1989.

(B) San Bernardino County Air Pollution District.

(*1*) Amended Rules 101, 102 (except fugitive liquid leak and fugitive vapor leak), 103, 104, 105, and 106 adopted on December 19, 1988.

(*2*) Previously approved on November 27, 1990 in paragraph (c)(179)(i)(B)(*1*) of this section and now deleted without replacement, Rule 105.

(C) Bay Area Air Quality Management District.

(*1*) Rule 8–44, adopted January 4, 1989.

(D) Ventura County Air Pollution Control District.

(*1*) Rule 74.7, adopted on January 10, 1989.

(*2*) Rule 30 adopted on May 30, 1989.

(E) Siskiyou County Air Pollution Control District.

(*1*) Rules 1.2 (except section V1), 1.4, 2.1, 2.2, 2.10. 4.1, 4.6, 6.1, and Appendix A, adopted on January 24, 1989.

(*2*) Rule 4.10 adopted on January 24, 1989.

(*3*) Rule 4.3, adopted on January 24, 1989.

(*4*) Previously approved on November 4, 1996 in paragraph (c)(179)(i)(E)(*1*) of this section and now deleted without replacement, Rule 1.4.

(*5*) Previously approved on November 4, 1996 in paragraph (c)(179)(i)(E)(*1*) of this section and now deleted without replacement Rule 2.10.

(F) Lake County Air Quality Management District.

(*1*) Rule 1010, adopted on June 13, 1989.

(*2*) Section (Rule) 431.5, adopted on June 13, 1989.

(G) Tuolumne County Air Pollution Control District.

(*1*) Rules 101, 102, and Rule 300, adopted November 22, 1988.

(*2*) Rules 302 to 310, adopted on November 22, 1988.

(180) [Reserved]

(181) New and amended regulations for the following APCD were submitted on October 16, 1990, by the Governor's designee.

(i) *Incorporation by reference.* (A) Ventura County Air Pollution Control District.

(*1*) Rule 71.2, adopted on September 26, 1989.

(182) New and amended regulations for the following APCDs were submitted on December 31, 1990, by the Governor's designee.

(i) *Incorporation by reference.* (A) South Coast Air Quality Management District.

(*1*) Rules 1175 and 1176, adopted on January 5, 1990.

(*2*) Rule 109, adopted on May 5, 1989.

(*3*) Rule 108, adopted on April 6, 1990.

(*4*) Rule 461, adopted on July 7, 1989.

(*5*) Rule 431.2, amended on May 4, 1990.

(B) Bay Area Air Quality Management District.

(*1*) Regulation 8, Rule 8, adopted on November 1, 1989.

(*2*) Amended Rule 8-28, adopted September 6, 1989.

(*3*) Rule 8–46, adopted July 12, 1989.

(*4*) Amended Regulation 8, Rule 16, adopted on August 2, 1989.

(*5*) Amended Regulation 8, Rule 11, adopted on September 20, 1989.

(*6*) Regulation 2, Rule 1 adopted on November 1, 1989.

(*7*) Previously approved on January 26, 1999 in paragraph (c)(182)(i)(B)(*6*) of this section and now deleted with replacement in (c)(429)(i)(E)(*1*), Regulation 2, Rule 1 adopted on November 1, 1989.

(C) San Luis Obispo County Air Pollution Control District.

(*1*) Rule 424, adopted on July 18, 1989.

(D) Santa Barbara County Air Pollution Control District.

(*1*) Amended Rule 323, adopted on February 20, 1990.

(E) San Diego County Air Pollution Control District.

(*1*) Amended Rules 101, 102, 103, and 108, adopted March 27, 1990.

(*2*) Previously approved on March 11, 1988 in paragraph (c)(182)(i)(E)(*1*) of this section and now deleted Rules 101, 102, 103, and 108 (now replaced by Rule 101).

(F) Modoc County Air Pollution Control District.

(*1*) Rules 4.1–2, 4.6, 4.6–1, and 4.9 adopted on January 3, 1989.

(*2*) Rule 4.11, adopted on January 3, 1989.

(*3*) Rule 1.2 and Rule 7.1, adopted May 1, 1989.

(*4*) Rule 4.1, adopted on January 15, 1989.

(*5*) Regulation II, ''Permit System,'' Rule 2.3 ''Transfers'' amended on January 15, 1989.

(*6*) Regulation II, ''Permit System,'' Rule 2.5 ''Expiration of Applications'' amended on January 15, 1989.

(*7*) Regulation II, ''Permit System,'' Rule 2.7 ''Conditional Approval'' amended on January 15, 1989.

(*8*) Regulation II, ''Permit System,'' Rule 2.10 ''Further Information'' amended on January 15, 1989.

(G) Siskiyou County Air Pollution Control District.

(*1*) Rule 4.14, adopted on July 11, 1989.

(*2*) Rule 7.1, adopted July 11, 1989.

(183) New and amended regulations for the following APCD's were submitted on April 5, 1991, by the Governor's designee.

(i) *Incorporation by reference.* (A) San Diego County Air Pollution Control District.

(*1*) Rule 67.8, adopted on December 18, 1990.

(*2*) Rule 61.9, adopted on March 14, 1989, is now removed without replacement as of April 19, 1994.

(*3*) Revised Rule 67.3, adopted on October 16, 1990.

(*4*) Amended Rule 61.4, adopted on October 16, 1990.

(*5*) Amended Rule 67.4, adopted July 3, 1990.

(*6*) Amended Rule 61.0, adopted on September 16, 1990.

(*7*) New Rule 67.12, adopted December 4, 1990.

(*8*) Previously approved on March 24, 1992 and now deleted without replacement Rule 67.8.

(*9*) Amended Rule 67.18, adopted on July 3, 1990.

(*10*) Revised Rules 61.2, 61.3, and 67.5, adopted October 16, 1990.

(*11*) Amended Rule 61.1, adopted October 16, 1990.

(*12*) Rule 67.6, adopted on October 16, 1990.

(*13*) Rule 67.15, adopted on December 18, 1990.

(B) Ventura County Air Pollution Control District.

(*1*) Rules 74.5.1 and 74.5.2, adopted on December 4, 1990.

(*2*) Rule 71, adopted on September 11, 1990.

(*3*) Rule 74.13, adopted on January 22, 1991.

(*4*) Rule 74.16, adopted January 8, 1991.

(C) Placer County Air Pollution Control District.

(*1*) Amended Rule 217, adopted on September 25, 1990.

(*2*) Amended Rule 213, adopted on September 25, 1990.

(*3*) New Rule 410 and Amended Rule 223, adopted on September 25, 1990.

(*4*) Amended Rule 212, adopted September 25, 1990.

(*5*) Rule 216, adopted on September 25, 1990.

(D) Sacramento Metropolitan Air Quality Management District.

(*1*) Amended rules 443, adopted September 25, 1990, and 452, adopted August 21, 1990.

(E)(*1*) [Reserved]

(*2*) Rule 316, adopted on July 10, 1990.

(F) Bay Area Air Quality Management District.

(*1*) Amended Regulation 8, Rule 43, adopted on June 20, 1990.

(*2*) Regulation 8, Rule 17, adopted on September 5, 1990.

(G) [Reserved]

(H) El Dorado County Air Pollution Control District.

(*1*) Regulation IX, Rules 900 through 914, adopted September 18, 1990.

(*2*) Previously approved on October 1, 1999 in paragraph (c)(183)(i)(H)(*1*) of this section and now deleted Rules 900, 901, 902, 903, and 904 (now replaced by Rule 238).

(*3*) Previously approved on October 1, 1999 in paragraph (c)(183)(i)(H)(*1*) of this section and now deleted Rules 905, 906, 907, 908, 910, 911, and 912 (now replaced by Rule 244).

(*4*) Previously approved on October 1, 1999 in paragraph (c)(183)(i)(H)(*1*) of this section and now deleted Rule 909 (now replaced by a Negative Declaration adopted on April 3, 2001).

(*5*) Previously approved on October 1, 1999 in paragraph (c)(183)(i)(H)(*1*) of this section and now deleted without replacement Rule 913.

(*6*) Previously approved on October 1, 1999 in paragraph (c)(183)(i)(H)(*1*) of this section and now deleted Rule 914 (now replaced by Rule 501).

(184) New and amended regulations for the following APCDs were submitted on May 13, 1991, by the Governor's designee.

(i) *Incorporation by reference.* (A) Sacramento Metropolitan Air Quality Management District.

(*1*) Amended rule 445, adopted November 6, 1990.

(*2*) Amended Rules 442, adopted October 2, 1990, and 446, adopted December 4, 1990.

(*3*) Previously approved on August 20, 1991 and now deleted without replacement Rule 445.

(B) South Coast Air Quality Management District.

(*1*) Rules 1102 and 1102.1, adopted on December 7, 1990.

(*2*) Rule 465, adopted on December 7, 1990, and Rule 1123, adopted on December 7, 1990.

(*3*) Rules 1153 and 1164, adopted on January 4, 1991, and December 7, 1990, respectively.

(*4*) New Rule 1174, adopted on October 5, 1990.

(*5*) Rule 1103, adopted on December 7, 1990.

(*6*) Rule 464, adopted on December 7, 1990.

(*7*) Rules 201, 203, 205, 209, 214 to 217 amended on January 5, 1990 and Rule 201.1 adopted on January 5, 1990.

(*8*) Rule 208, adopted on January 5, 1990.

(*9*) Previously approved on August 11, 1992 and now deleted without replacement for implementation in the Antelope Valley Air Pollution Control District Rule 1123.

(*10*) Rules 1162 and 1173, adopted on December 7, 1990.

(*11*) Previously approved on May 13, 1999 in paragraph (c)(184)(i)(B)(*7*) of this section and now deleted without replacement Rules 214, 215, and 216.

(*12*) Previously approved on October 4, 1994 in paragraph (c)(184)(i)(B)(*4*) of this section and now deleted without replacement, for the Antelope Valley area only, Antelope Valley Rule 1174, previously South Coast Rule 1174. South Coast Rule 1174 remains in effect for the South Coast area.

(C) Bay Area Air Quality Management District.

(*1*) Rule 8-37, adopted on October 17, 1990.

(*2*) Regulation 6, adopted on December 19, 1990.

(D) San Diego County Air Pollution Control District.

(E) Yolo-Solano Air Quality Management District.

(*1*) Rule 2.24, adopted on November 14, 1990.

(F) Tehama County Air Pollution Control District.

(*1*) Rule 1.2, adopted April 25, 1989.

(*2*) Rule 3.12, adopted on April 25, 1989.

(185) New and amended regulations for the following APCD's were submitted on May 30, 1991, by the Governor's designee.

(i) *Incorporation by reference.* (A) Kern County Air Pollution Control District.

(*1*) Rules 410.6 and 410.6A, adopted on May 6, 1991.

(*2*) Rule 410.5, adopted on May 6, 1991.

(*3*) Rule 410.4A, adopted on May 6, 1991.

(*4*) Amended Rule 410.1, adopted on May 6, 1991.

(*5*) Amended Rules 414 and 414.1 and New Rule 414.5, adopted on May 6, 1991.

(*6*) Revised Rule 410.4, adopted on May 6, 1991.

(*7*) Rule 410.3 and Rule 412, adopted on May 6, 1991.

(*8*) [Reserved]

(*9*) Rule 410.7, adopted May 6, 1991.

(B) San Diego County Air Pollution Control District.

(*1*) Rule 67.2, adopted on May 21, 1991.

(*2*) Rule 67.7, adopted on May 21, 1991.

(*3*) [Reserved]

(*4*) Amended Rule 67.16, adopted on May 21, 1991.

(*5*) Rule 67.1, adopted on May 21, 1991.

(C) San Joaquin Valley Unified Air Pollution Control District.

(*1*) Rules 467.1 and 467.2, adopted on April 11, 1991.

(*2*) Rule 460.2, adopted on April 11, 1991.

(*3*) New Rule 460.1, adopted on April 11, 1991.

(*4*) New Rules 463.4, 464.1, and 464.2, adopted on April 11, 1991.

(*5*) New Rule 461.2, adopted on April 11, 1991.

(*6*) Amended Rules 465.3 and 466.1, adopted April 11, 1991.

(*7*) Previously approved on April 24, 1992 and now deleted without replacement Rule 467.1.

(D) Placer County Air Pollution Control District.

(*1*) Amended Rule 215, adopted on September 25, 1990.

(186) New and amended regulations for the following APCDs were submitted on October 25, 1991, by the Governor's designee.

(i) *Incorporation by reference.* (A) Sacramento Metropolitan Air Quality Management District.

(*1*) Amended Rules 447 adopted April 30, 1991.

(B) San Joaquin Valley Unified Air Pollution Control District.

(*1*) Rule 468.1, adopted on May 16, 1991.

(C) South Coast Air Quality Management District.

(*1*) Rule 1104, adopted March 1, 1991.

(D) Ventura County Air Pollution Control District.

(*1*) Rule 62.6, adopted on July 16, 1991.

(*2*) Rule 103, adopted on June 4, 1991.

(E) Santa Barbara County Air Pollution Control District.

(*1*) Rule 105 adopted on July 30, 1991.

(F) Northern Sierra Air Pollution Control District.

(*1*) Rules 302 to 312, adopted on November 10, 1988.

(187) New and amended regulations for the following APCDs were submitted on January 28, 1992, by the Governor's designee.

(i) *Incorporation by reference.* (A) San Joaquin Valley Unified Air Pollution Control District.

(*1*) Rule 463.1, adopted on September 19, 1991.

(*2*) Rule 460.2 adopted on September 19, 1991.

(*3*) New Rule 463.2, adopted on September 19, 1991.

(*4*) New Rule 460.4, adopted on September 19, 1991.

(*5*) Rule 461.1 and Rule 465.2, adopted on September 19, 1991.

(*6*) Rule 465.1, adopted on September 19, 1991.

(B) Ventura County Air Pollution Control District.

(*1*) New Rule 74.17, adopted on September 17, 1991.

(*2*) Rule 74.1, adopted on November 12, 1991.

(*3*) New rules 150 to 159 amended on September 17, 1991.

(*4*) Rules 26.A (''General''), 26.8 and 26.9 adopted on October 22, 1991.

(*5*) Previously approved on October 4, 1994 in paragraph (c)(187)(i)(B)(*1*) of this section and now deleted without replacement, Rule 74.17.

(C) South Coast Air Quality Management District.

(*1*) Rule 1142, adopted on June 19, 1991.

(*2*) Rule 1135, adopted on July 19, 1991.

(*3*) Previously approved on December 13, 1994 and now deleted without replacement for implementation in the Antelope Valley Air Pollution Control District Rule 1142.

(D) San Diego County Air Pollution Control District.

(*1*) New rules 127, 128, and 130 amended on September 17, 1991.

(E) Santa Barbara County Air Pollution Control District.

(*1*) Rule 206, ''Conditional Approval of Authority to Construct or Permit to Operate,'' Revised October 15, 1991.

(188) New and amended regulations for the following APCDs were submitted on June 19, 1992, by the Governor's designee.

(i) *Incorporation by reference.* (A) Santa Barbara County Air Pollution Control District.

(*1*) Rule 339, adopted on November 5, 1991.

(*2*) Rule 331, adopted on December 10, 1991.

(*3*) Rule 342, adopted on March 10, 1992.

(*4*) Rule 329, adopted on February 25, 1992.

(B) San Bernardino County Air Pollution Control District.

(*1*) Rule 1116, adopted on March 2, 1992.

(C) South Coast Air Quality Management District.

(*1*) Rule 1171, adopted on August 2, 1991.

(*2*) Rule 465, amended on November 1, 1991.

(D) Ventura County Air Pollution Control District.

(*1*) Rule 74.18, adopted on January 28, 1992.

(*2*) Rule 74.6, adopted on December 10, 1991.

(*3*) Rule 74.3, adopted on December 10, 1991.

(*4*) Rule 29 adopted on October 22, 1991.

(E) [Reserved]

(F) Sacramento Metropolitan Air Quality Management District.

(*1*) Rules 448 and 449 adopted on December 17, 1991.

(189) New and amended regulations for the following APCDs were submitted on September 14, 1992, by the Governor's designee.

(i) *Incorporation by reference.* (A) South Coast Air Quality Management District.

(*1*) Rule 1115, adopted on March 6, 1992.

(*2*) Rule 1126, adopted on March 6, 1992.

(*3*) Rule 1128, adopted on February 7, 1992, and Rule 1141, adopted on April 3, 1992.

(*4*) Rules 1125 and 1136, adopted on August 2, 1991.

(*5*) New Rule 1179, adopted March 6, 1992.

(*6*) Rule 109 adopted on March 6, 1992, and Rule 1106.1 adopted on May 1, 1992.

(*7*) Rule 1141.1, adopted on November 4, 1983 and amended on March 6, 1992.

(*8*) Previously approved on December 20, 1993 in paragraph (c)(189)(i)(A)(*3*) of this section and now deleted without replacement for implementation in the Antelope Valley Air Quality Management District Rule 1141.

(*9*) Previously approved on December 20, 1993 in paragraph (c)(189)(i)(A)(*3*) of this section and now deleted without replacement for implementation in the Antelope Valley Air Quality Management District, Rule 1128.

(B) Ventura County Air Pollution Control District.

(*1*) Rule 71.1 and Rule 71.3, adopted on June 16, 1992.

(*2*) Rule 74.10, adopted on June 16, 1992.

(*3*) Rule 74.14, adopted on May 26, 1992.

(C) Bay Area Air Quality Management District.

(*1*) Rule 8–49, adopted on August 21, 1992.

(*2*) Regulation 9 Rule 1, amended on May 20, 1992.

(190) New and amended regulations for the following APCDs were submitted on November 12, 1992, by the Governor's designee.

(i) *Incorporation by reference.* (A) Ventura County Air Pollution Control District.

(*1*) Revised Rule 74.19, adopted August 11, 1992.

(*2*) Rule 74.2 revised on August 11, 1992.

(*3*) Rule 24 adopted on September 15, 1992.

(B) Bay Area Air Quality Management District.

(*1*) Rule 8–18, adopted on March 4, 1992.

(C) El Dorado County Air Pollution Control District.

(*1*) Rule 1000 adopted on September 21, 1992.

(D) Feather River Air Pollution Control District.

(*1*) Rule 4.8 adopted on September 14, 1992.

(E) Kern County Air Pollution Control District.

(*1*) Rule 108.2 adopted on July 13, 1992.

(F) San Bernardino County Air Pollution Control District (now Mojave Desert Air Quality Management District).

(*1*) Rule 107 adopted on September 14, 1992.

(G) Santa Barbara County Air Pollution Control District.

(*1*) Rule 212 adopted on October 20, 1992.

(191) New and amended regulations for the following APCDs were submitted on January 11, 1993, by the Governor's designee.

(i) *Incorporation by reference.* (A) South Coast Air Quality Management District.

(*1*) Rule 1145, adopted on January 10, 1992.

(B) Santa Barbara County Air Pollution Control District.

(*1*) Rule 346, adopted on October 13, 1992.

(C) San Bernardino County Air Pollution Control District.

(*1*) Rule 463, adopted on November 2, 1992.

(D) Kern County Air Pollution Control District.

(*1*) Rule 412.1, adopted on November 9, 1992.

(192) New and amended regulations for the following APCDs were submitted on April 6, 1993, by the Governor's designee.

(i) *Incorporation by reference.* (A) Sacramento Air Quality Management District.

(*1*) Rule 456, adopted on February 23, 1993.

(*2*) Rule 454, adopted on February 23, 1993.

(*3*) Revised Rule 450, adopted February 23, 1993.

(193) New and amended regulations for the following APCDs were submitted on May 13, 1993, by the Governor's designee.

(i) *Incorporation by reference.* (A) South Coast Air Quality Management District.

(*1*) Rule 1106, adopted on August 2, 1991; Rule 1107, adopted on August 2, 1991; and Rule 1151, adopted on September 6, 1991.

(*2*) Rule 1130 adopted on March 6, 1992.

(*3*) Rule 1122, adopted on April 5, 1991.

(B) San Luis Obispo County Air Pollution Control District.

(*1*) Rule 417, adopted February 9, 1993.

(C) Butte County Air Pollution Control District.

(*1*) Rule 241, adopted on January 12, 1993.

(D) Glenn County Air Pollution Control District.

(*1*) Section 51, adopted on March 16, 1993.

(E) Ventura County Air Pollution Control District

(1) Rule 26.7 adopted on December 22, 1992.

(194) New and amended regulations for the following APCDs were submitted on November 18, 1993, by the Governor's designee.

(i) *Incorporation by reference.* (A) Ventura County Air Pollution Control District.

(*1*) Rule 70, adopted on May 4, 1993; Rule 71, adopted on June 8, 1993; and Rule 71.4, adopted on June 8, 1993.

(*2*) Rule 59, adopted on September 15, 1992.

(*3*) Rule 74.15.1, adopted on May 11, 1993.

(*4*) Rule 74.21, adopted on April 6, 1993.

(*5*) Rule 74.20, adopted on June 8, 1993.

(B) Kern County Air Pollution Control District.

(*1*) Rule 410.4, adopted on July 12, 1993.

(*2*) Rule 425, adopted on August 16, 1993.

(*3*) Previously submitted to EPA on June 28, 1982 and approved in the FEDERAL REGISTER on May 3, 1984 and now removed without replacement, Rule 425.

(*4*) Rule 424 adopted on April 19, 1993.

(C) San Joaquin Valley Unified Air Pollution Control District.

(*1*) Rule 4603, adopted on May 20, 1993.

(*2*) Rule 4621, adopted on May 20, 1993.

(*3*) Rule 4802, adopted on May 21, 1992, and amended on December 17, 1992.

(*4*) Rules 2031, 2070, 2080, and 2092 adopted on May 21, 1992 and amended on December 17, 1992.

(*5*) Rule 4201, adopted on December 17, 1992.

(D) Santa Barbara County Air Pollution Control District.

(*1*) Rule 349, adopted on April 27, 1993.

(E) San Diego County Air Pollution Control District.

(*1*) Rule 67.12, adopted on April 6, 1993.

(*2*) Amended Rule 19, adopted April 6, 1993.

(F) Monterey Bay Unified Air Pollution Control District

(*1*) Rule 417, Rule 418, and Rule 427, adopted on August 25, 1993.

(*2*) Rule 425, adopted on August 25, 1993.

(*3*) Rule 420 and Rule 426, adopted on August 25, 1993.

(*4*) Previously submitted to EPA on February 6, 1975 and approved in the FEDERAL REGISTER on July 13, 1987 and now removed without replacement, Rule 428.

(*5*) Rule 300—Regulation 3, Part 4, Paragraph 4.4 adopted on June 9, 1993.

(G) Mendocino County Air Quality Management District.

(*1*) Rule 130 (p6), (t2), and (t3) adopted April 6, 1993.

(*2*) Rule 400(b) adopted on April 6, 1993.

(H) South Coast Air Quality Management District.

(*1*) Rule 403.1, adopted on January 15, 1993.

(I) Sacramento Metropolitan Air Quality Management District.

(*1*) Rule 105 adopted on April 20, 1993.

(J) Yolo-Solano Air Quality Management District.

(*1*) Rule 3.18 adopted on July 28, 1993.

(195) New and amended regulations for the following APCDs were submitted on February 11, 1994, by the Governor's designee.

(i) *Incorporation by reference.* (A) San Diego Air Pollution Control District.

(*1*) Rule 67.17, adopted on September 21, 1993.

(B) Ventura County Air Pollution Control District.

(*1*) Rule 74.22, adopted on November 9, 1993.

(*2*) Rule 59, adopted on October 12, 1993.

(196) New and amended regulations for the following APCDs were submitted on March 29, 1994 by the Governor's designee.

(i) *Incorporation by reference.* (A) Sacramento Metropolitan Air Quality Management District.

(*1*) Sacramento Metropolitan AQMD rules 442, 443, 446, 447, and 452 adopted on November 16, 1993.

(B) Ventura County Air Pollution Control District.

(*1*) Rule 74.9, adopted on December 21, 1993.

(*2*) Rule 15.1 adopted on October 12, 1993.

(C) Santa Barbara County Air Pollution Control District.

(*1*) Rule 316, adopted on December 14, 1993.

(*2*) Rules 325 & 326, adopted on January 25, 1994 and December 14, 1993, respectively.

(*3*) Rule 343, adopted on December 14, 1993.

(D) Yolo-Solano Air Quality Management District.

(*1*) Rule 3.2, adopted on August 25, 1993; and rules 3.14 and 3.15, adopted on September 22, 1993.

(E) Monterey Bay Unified Air Pollution Control District.

(*1*) Rule 213, amended on February 16, 1994.

(F) [Reserved]

(*4*) Rule 401, adopted on April 18, 1972 and amended on November 29, 1993.

(197) New and amended regulations for the following APCDs were submitted on May 24, 1994, by the Governor's designee.

(i) *Incorporation by reference.* (A) South Coast Air Quality Management District.

(*1*) Rules 1162, 1173, 1175 and 1176, adopted on May 13, 1994.

(*2*) Rule 463, adopted on March 11, 1994.

(B) Bay Area Air Quality Management District.

(*1*) Rule 8–6, adopted on February 2, 1994. Rule 8–5, adopted on January 20, 1993.

(C) San Joaquin Valley Unified Air Pollution Control District.

(*1*) Rule 4622, adopted on February 17, 1994.

(*2*) Rule 4681, adopted on December 16, 1993.

(*3*) Rules 4302 and 4303, adopted on May 21, 1992 and amended on December 16, 1993.

(*4*) Rule 4103, adopted on December 16, 1993.

(*5*) Rule 1081, originally adopted on April 11, 1991 and amended on December 16, 1993.

(*6*) Rule 2050, ''Cancellation of Application,'' adopted on May 21, 1992 and amended on December 16, 1993.

(D) Ventura County Air Pollution Control District.

(*1*) Rule 74.24, adopted on March 8, 1994.

(*2*) Rule 56, adopted on October 22, 1968, as amended on March 29, 1994.

(E) El Dorado County Air Pollution Control District.

(*1*) Rules 501, 523, 524, and 525 adopted on April 26, 1994.

(198) New and amended regulations for the following APCDs were submitted on July 13, 1994, by the Governor's designee.

(i) *Incorporation by reference.* (A) Bay Area Air Quality Management District.

(*1*) Revised Rule 8–8, adopted on June 15, 1994.

(B) Placer County Air Pollution Control District.

(*1*) Rule 230, adopted on June 28, 1994.

(*2*) Rule 229, adopted on June 28, 1994.

(*3*) Previously approved on December 14, 1994 in paragraph (c)(198)(i)(B)(1) of this section and now deleted without replacement Rule 230.

(*4*) Previously approved on June 8, 2001 in paragraph (c)(198)(i)(B)(2) of this section and now deleted without replacement Rule 229.

(C) San Joaquin Valley Unified Air Pollution Control District.

(*1*) Rule 4407, adopted on May 19, 1994.

(*2*) Rule 4682 adopted on June 16, 1994 and Rule 4684 adopted on May 19, 1994.

(*3*) Rule 4607, adopted on May 19, 1994.

(D) Sacramento Metropolitan Air Quality Management District.

(*1*) Rule 458, adopted on June 7, 1994.

(E) Mojave Desert Air Quality Management District.

(*1*) Rules 461 and 462, adopted on May 25, 1994.

(*2*) Rule 1117 adopted June 22, 1994.

(F) Monterey Bay Unified Air Pollution Control District.

(*1*) Rule 430, adopted on May 25, 1994.

(*2*) Rule 416, adopted April 20, 1994.

(G) [Reserved]

(H) South Coast Air Quality Management District.

(*1*) Rule 1146 and Rule 1146.1, adopted May 13, 1994.

(I) San Diego County Air Pollution Control District.

(*1*) Rule 67.10, adopted on June 15, 1994.

(*2*) Rule 60 adopted on May 17, 1994.

(J) Ventura County Air Pollution Control District.

(*1*) Rule 74.28, adopted on May 10, 1994.

(*2*) Rule 74.30 adopted May 17, 1994.

(*3*) Rule 64, amended June 14, 1994.

(*4*) Rule 54, amended on June 14, 1994.

(K) Santa Barbara County Air Pollution Control District.

(*1*) Rule 354, adopted June 28, 1994.

(*2*) Rule 359, adopted on June 28, 1994.

(199) New and amended regulations for the following APCDs were submitted on September 28, 1994 by the Governor's designee.

(i) *Incorporation by reference.* (A) Bay Area Air Quality Management District.

(*1*) Regulation 8, Rules 11 and 16 adopted on June 15, 1994, and Regulation 8, Rule 28 adopted on June 1, 1994.

(*2*) Regulation 8, Rules 14 and 43 adopted on June 1, 1994, and regulation 8, Rules 13, 23, 47 adopted on June 15, 1994.

(*3*) Rules 8–25 and 8–42, adopted on June 1, 1994 and Rule 8–50, adopted on June 15, 1994.

(*4*) Rule 8–22, adopted on June 1, 1994.

(*5*) Rules 8–29, 8–33, and 8–39, adopted on June 1, 1994, and Rules 8–19 and 8–38, adopted on June 15, 1994.

(*6*) Rules 8–4, 8–7, 8–15, 8–31, and 8–41 adopted on June 1, 1994. Rules 8–1, 8–2, 8–12, 8–20, 8–24, 8–30, 8–34, 8–35, and 8–40 adopted on June 15, 1994. Rule 8–32 adopted on July 6, 1994.

(*7*) [Reserved]

(*8*) Regulation 2, Rule 2 and Rule 4 adopted on June 15, 1994.

(*9*) Previously approved on January 26, 1999 in paragraph (c)(199)(i)(A)(*8*) of this section and now deleted with replacement in (c)(429)(i)(E)(*2*), Regulation 2, Rule 2 adopted on June 15, 1994.

(*10*) Previously approved on January 26, 1999 in paragraph (c)(199)(i)(A)(*8*) of this section and now deleted with replacement in (c)(429)(i)(E)(*3*), Regulation 2, Rule 4 adopted on June 15, 1994.

(B) San Luis Obispo County Air Pollution Control District.

(*1*) Rule 419, adopted July 12, 1994.

(C) Monterey Bay Unified Air Pollution Control District.

(*1*) Rules 433 and 434, adopted June 15, 1994.

(D) San Joaquin Valley Unified Air Pollution Control District.

(*1*) Rule 4352, adopted on September 14, 1994.

(*2*) Rule 4354, adopted on September 14, 1994.

(*3*) Rules 6010, 6020, 6040, 6050, 6060, 6070, 6080, 6081, 6090, 6100, 6110, 6120, 6130, 6140, and 6150 were adopted on May 21, 1992; amended on December 17, 1992.

(*4*) Rule 4301, adopted on May 21, 1992, as amended on December 17, 1992.

(*5*) Rule 1010 adopted on June 18, 1992 and Rule 1130 adopted on June 18, 1992 and amended on December 17, 1992.

(*6*) Rules 1110, 1140, 1150, 2010, and 2040 amended on December 17, 1992.

(*7*) Rule 4202, adopted on December 17, 1992.

(*8*) Rule 1080, originally adopted on June 18, 1992 and amended on December 17, 1992.

(*9*) Previously approved on June 3, 1999 in paragraph (c)(199)(i)(D)(*6*) of this section and now deleted without replacement Rule 2040.

(*10*) Rules 1040, 1050, 1070 and 1090 adopted on June 18,1992 and amended on December 17, 1992.

(E) Yolo-Solano Air Quality Management District.

(*1*) Rule 2.34, adopted on July 13, 1994.

(*2*) Rule 2.32 adopted on August 10, 1994.

(*3*) Previously approved on September 3, 1998, in paragraph (c)(199)(i)(E)(*1*) of this section and now deleted with replacement in paragraph (c)(463)(i)(B)(*3*) of this section, Rule 2.34, ''Stationary

Gas Turbines,'' adopted on July 13, 1994.

(200) Program elements were submitted on November 13, 1992 by the Governor's designee.

(i) *Incorporation by reference.* (A) Small Business Stationary Source Technical and Environmental Compliance Assistance Program, adopted on October 15, 1992.

(201) A plan for the following agency was submitted on November 7, 1994 by the Governor's designee.

(i) *Incorporation by reference.* (A) California Air Resources Board.

(*1*) California's Opt-out Program, Executive Order G–125–145, dated November 7, 1994.

(202) New and amended regulations for the following APCDs were submitted on October 19, 1994, by the Governor's designee.

(i) *Incorporation by reference.* (A) Bay Area Air Quality Management District.

(*1*) Rule 2–1–249, adopted on June 15, 1994.

(*2*) Previously approved on April 3, 1995 in paragraph (c)(202)(i)(A)(*1*) of this section and now deleted with replacement in (c)(429)(i)(E)(*1*), Rule 2–1–249, adopted on June 15, 1994.

(B) Kern County Air Pollution Control District.

(*1*) Rule 425.3, adopted on October 13, 1994.

(*2*) Rule 425.1 adopted on October 13, 1994.

(C) San Diego County Air Pollution Control District. (*1*) Rule 67.4, adopted on September 27, 1994.

(*2*) Rule 67.16, adopted on September 20, 1994.

(*3*) Rule 69.2, adopted on September 27, 1994.

(*4*) Rule 68, adopted on September 20, 1994.

(*5*) Rule 69.4, adopted on September 27, 1994.

(*6*) Rule 69.3, adopted on September 27, 1994.

(D) Mojave Desert Air Quality Management District.

(*1*) Rule 464, adopted August 24, 1994.

(E) Placer County Air Pollution Control District.

(*1*) Rule 250, adopted on October 17, 1994.

(*2*) Rule 233, adopted on October 6, 1994.

(*3*) Previously approved on August 23, 1995, in paragraph (c)(202)(i)(E)(*1*) of this section, and now deleted with replacement in (c)(474)(i)(A)(*1*), Rule 250, ''Stationary Gas Turbines,'' adopted on October 17, 1994.

(F) Yolo-Solano Air Quality Management District.

(*1*) Rule 3.1, adopted on February 23, 1994.

(*2*) Previously approved on July 7, 1997 in paragraph (c)(202)(i)(F)(*1*) of this section and now deleted without replacement Rule 3.1, paragraphs 403 and 406.

(203) New and amended regulations for the following APCDs were submitted on October 20, 1994, by the Governor's designee.

(i) *Incorporation by reference.* (A) El Dorado County Air Pollution Control District.

(*1*) Rule 233 adopted on October 18, 1994.

(*2*) Rule 229 adopted on September 27, 1994.

(204) New and amended plans and regulations for the following agencies were submitted on November 15, 1994, by the Governor's designee.

(i) *Incorporation by reference.* (A) California Air Resources Board.

(*1*) Title 17, California Code of Regulations, Subchapter 8.5, Consumer Products, Article 1, Antiperspirants and Deodorants, Sections 94500–94506.5 and Article 2, Consumer Products, Sections 94507–94517, adopted on December 27, 1990, August 14, 1991, and September 21, 1992.

(*2*) Title 13, California Code of Regulations, Diesel Fuel Regulations, Sections 2281–2282, adopted on August 22, 1989, June 21, 1990, April 15, 1991, October 15, 1993, and August 24, 1994.

(*3*) Title 13, California Code of Regulations, Reformulated Gasoline Regulations, Sections 2250, 2252, 2253.4, 2254, 2257, 2260, 2261, 2262.1, 2262.2, 2262.3, 2262.4, 2262.5, 2262.6, 2262.7, 2263, 2264, 2266–2272, and 2296, 2297, adopted on April 1, 1991, May 23, 1991, and September 18, 1992.

(*4*) Long Term Measures, Improved Control Technology for Light-Duty Vehicles (Measure M2), Off-Road Industrial Equipment (Diesel), Consumer Products Long-Term Program (Measure CP4), and Additional Measures

(Possible Market-Incentive Measures and Possible Operational Measures Applicable to Heavy-Duty Vehicles), as contained in ''The California State Implementation Plan for Ozone, Volume II: The Air Resources Board's Mobile Source and Consumer Products Elements,'' adopted on November 15, 1994.

(*5*) Mid-Term Measures, Accelerated Ultra-Low Emission Vehicle (ULEV) requirement for Medium-Duty Vehicles (Measure M3), Heavy-Duty Vehicles NO_X regulations (Measure M5), Heavy-Duty Gasoline Vehicles lower emission standards (Measure M8), Industrial Equipment, Gas & LPG—3-way catalyst technology (Measure M11), Mid-Term Consumer Products (Measure CP–2), as contained in The California State Implementation Plan for Ozone, Volume II: The Air Resources Board's Mobile Source and Consumer Products Elements, adopted on Nov. 15, 1994.

(*6*) State control measures: Accelerated Retirement of LDV's (Measure M1), Early Introduction of 2g/bhp-hr Heavy Duty Diesel Vehicles (Measure M4), Accelerated Retirement of Heavy-Duty Vehicles (Measure M7), Aerosol Paints (Measure CP3), and California Department of Pesticide Regulation's Pesticide Plan, as contained in ''The California State Implementation Plan for Ozone, Volume II: The Air Resources Board's Mobile Source and Consumer Products Elements,'' adopted on November 15, 1994, and tables of local agency control measures and revisions to local Rate-of-Progress plan elements as contained in ''The California State Implementation Plan for Ozone, Volume IV: ''Local Plans,'' adopted on November 15, 1994.

(*7*) Previously approved on August 21, 1995, in paragraph (c)(204)(i)(A)(*3*) of this section, and now deleted without replacement: Title 13, California Code of Regulations, Reformulated Gasoline Regulations, sections 2262.1, 2262.2, and 2262.7.

(B) South Coast Air Quality Management District.

(*1*) Long Term Measures, Advance Technology for Coating Technologies (Measure ADV–CTS–01), Advance Technology for Fugitives (Measure ADV–FUG), Advance Technologies for Process Related Emissions (Measure ADV–PRC), Advance Technologies for Unspecified Stationary Sources (Measure ADV–UNSP), and Advance Technology for Coating Technologies (Measure ADV–CTS–02), as contained in the ''1994 Air Quality Management Plan,'' adopted on September 9, 1994.

(*2*) Control measures, emissions inventory, modeling, and ozone attainment demonstration, as contained in ''1994 Air Quality Management Plan,'' adopted on September 9, 1994.

(C) San Diego Air Pollution Control District.

(*1*) Emissions inventory, 15% Rate-of-Progress plan, Post-1996 Rate-of-Progress plan, modeling, and ozone attainment demonstration, as contained in ''1994 Ozone Attainment and Rate-of-Progress Plans for San Diego County,'' adopted on November 1, 1994.

(D) San Joaquin Valley Unified Air Pollution Control District.

(*1*) Control measures, emissions inventory, 15% Rate-of-Progress plan, Post-1996 Rate-of-Progress plan, modeling, and ozone attainment demonstration, as contained in ''San Joaquin Valley Attainment and Rate-of-Progress Plans,'' adopted on November 14, 1994.

(E) Ventura County Air Pollution Control District.

(*1*) Control measures, emissions inventory, 15% Rate-of-Progress plan, Post-1996 Rate-of-Progress plan, modeling, and ozone attainment demonstration, as contained in ''1994 Air Quality Management Plan for Ventura County,'' adopted on November 8, 1994.

(F) Mojave Desert Air Quality Management District.

(*1*) Control measures, emissions inventory, modeling, and ozone attainment demonstration, as contained in ''Rate-of-Progress and Attainment Demonstration Plans for the Mojave Desert,'' adopted on October 26, 1994.

(205) New and amended plans for the following APCDs were submitted on December 28, 1994, by the Governor's designee.

(i) *Incorporation by reference.* (A) Kern County Air Pollution Control District.

(*1*) Emissions inventory, modeling, and ozone attainment demonstration, as contained in ''Rate-of-Progress and Attainment Demonstration Plans for the Kern County Air Pollution Control District,'' adopted on December 1, 1994.

(B) Bay Area Air Quality Management District.

(*1*) Amendments to the San Francisco Bay Area Redesignation Request and Maintenance Plan for the National Ozone Standard and 1990 Emissions Inventory adopted on September 7, 1994 by the Bay Area Air Quality Management District, October 5, 1994 by the Metropolitan Transportation Commission, and August 24, 1994 by the Association of Bay Area Governments.

(*2*) Federal General Conformity Regulation, adopted on September 7, 1994.

(206) Amended rule for the following APCD was submitted on November 23, 1994, by the Governor's designee.

(i) *Incorporation by reference.* (A) San Diego County Air Pollution Control District.

(*1*) Rule 67.3, adopted on November 1, 1994.

(207) New and amended regulations for the following APCDs were submitted on November 30, 1994, by the Governor's designee.

(i) *Incorporation by reference.* (A) Placer County Air Pollution Control District.

(*1*) Rule 223, adopted on October 6, 1994.

(*2*) Rules 101, 102, 103, 201, 202, 203, 204, 208, 209, 210, 211, 213, 214, 217, 219, 220, 221, 222, 225, 226, 228, 406, 407, and 408, adopted on October 19, 1993; deletion of 104 for Lake Tahoe Air Basin and Mountain Counties Air Basin submitted on 08/21/ 79 and 10/15/79, respectively.

(B) El Dorado County Air Pollution Control District.

(*1*) Rule 224, adopted on September 27, 1994.

(*2*) Rule 231, adopted September 27, 1994.

(*3*) Rule 215, adopted on September 27, 1994.

(*4*) Rules 225 and 230 adopted September 27, 1994.

(*5*) Rule 502, adopted on November 8, 1994.

(C) Yolo-Solano Air Quality Management District.

(*1*) Rule 2.21, adopted on March 23, 1994.

(*2*) Rule 2.28, adopted on May 25, 1994.

(*3*) Rules 2.25 and 2.33, adopted April 27, 1994 and September 14, 1994, respectively.

(*4*) Rule 2.13 adopted May 25, 1994.

(*5*) Rule 2.35, adopted on September 14, 1994.

(*6*) Rule 2.29, adopted on May 25, 1994.

(*7*) Rule 2.31, adopted on April 27, 1994.

(*8*) Rule 2.23 adopted on March 23, 1994.

(D) Mojave Desert Air Quality Management District.

(*1*) Rule 1102, adopted October 26, 1994.

(*2*) Rule 1104 adopted September 28, 1994.

(*3*) Rule 1157 and Rule 1160, adopted on October 26, 1994.

(E) Monterey Bay Unified Air Pollution Control District.

(*1*) Rule 419, adopted on November 23, 1994.

(*2*) Appendix G General Conformity, adopted on October 19, 1994.

(F) Great Basin Unified Air Pollution Control District.

(*1*) Regulation XIII, adopted on October 5, 1994.

(G) San Joaquin Valley Unified Air Pollution Control District.

(*1*) Rule 9110, adopted on October 20, 1994.

(H) Santa Barbara County Air Pollution Control District.

(*1*) Rule 702, adopted on October 20, 1994.

(I) South Coast Air Quality Management District.

(*1*) Rule 1901, adopted on September 9, 1994.

(208) New and amended regulations for the following APCDs were submitted on December 19, 1994, by the Governor's designee.

(i) *Incorporation by reference.* (A) Placer County Air Pollution Control District.

(*1*) Rule 410, adopted on November 3, 1994.

(*2*) Rule 212, adopted on November 3, 1994.

(209) Redesignation Request and Ozone Maintenance Plan for the redesignation of the Monterey Bay Unified Air Pollution Control District submitted on July 14, 1994 and November 14, 1994, respectively, by the Governor's designee.

(i) *Incorporation by reference.* (A) Maintenance Plan for the redesignation of the Monterey Bay Area adopted on October 19, 1994 by the Monterey

Bay Unified Air Pollution Control District, October 12, 1994 by the Association of Monterey Bay Area Governments, and October 6, 1994 by the Council of San Benito County Governments.

(210) New and amended regulations for the following APCDs were submitted on December 22, 1994 by the Governor's designee.

(i) *Incorporation by reference.* (A) Bay Area Air Quality Management District.

(*1*) Rule 8–45, adopted on November 2, 1994.

(B) San Diego County Air Pollution Control District.

(*1*) Rule 67.18, adopted on December 13, 1994.

(C) Mojave Desert Air Quality Management District.

(*1*) Rule 1103, adopted on December 21, 1994.

(*2*) Rule 471, adopted on December 21, 1994.

(D) Monterey Bay Unified Air Pollution Control District.

(*1*) Rule 1002, adopted on November 23, 1994.

(E) San Joaquin Valley Unified Air Pollution Control District.

(*1*) Rule 4651, adopted on December 17, 1992.

(F) Feather River Air Quality Management District.

(*1*) Rule 10.4, adopted on November 7, 1994.

(G) Placer County Air Pollution Control District.

(*1*) Rule 508, adopted on November 3, 1994.

(H) Sacramento Metropolitan Air Quality Management District.

(*1*) Rule 104, adopted on November 3, 1994.

(211) Revised Clean Air Plans for ozone for the following APCDs submitted on November 14, 1994, by the Governor's designee.

(i) *Incorporation by reference.* (A) Santa Barbara Air Pollution Control District

(*1*) TCM–5, Improve Commuter Public Transit Service, adopted on November 2, 1994

(*2*) Emissions inventory, 15% Rate-of-Progress plan, and control measures, as contained in ''1994 Clean Air Plan for Santa Barbara County,'' adopted on November 2, 1994.

(212) Ozone redesignation request for the Bay Area Air Quality Management District submitted on November 5, 1993, by the Governor's designee.

(i) *Incorporation by reference.* (A) Redesignation request for the San Francisco Bay Area and the Ozone Maintenance Plan for the National Ozone Standard adopted on September 1, 1993 by the Bay Area Air Quality Management District, September 22, 1993 by the Metropolitan Transportation Commission, and September 16, 1993 by the Association of Bay Area Governments.

(213) California Statewide emission inventory submitted on March 30, 1995, by the Governor's designee.

(i) *Incorporation by reference.* (A) California Air Resources Board.

(*1*) 1990 Base-Year Emission Inventory for Ozone Nonattainment Areas in California.

(*i*) Sacramento, San Diego, San Joaquin Valley, South Coast, Southeast desert, Ventura.

(*ii*) Santa Barbara.

(*iii*) Monterey Bay Area.

(214) New and amended regulations for the following APCDs were submitted on January 24, 1995, by the Governor's designee.

(i) *Incorporation by reference.* (A) South Coast Air Quality Management District.

(*1*) Rule 1151, adopted on December 9, 1994.

(B) San Diego County Air Pollution Control District.

(*1*) Rule 61.1 adopted on January 10, 1995.

(C) Santa Barbara County Air Pollution Control District.

(*1*) Rule 337, adopted October 20, 1994.

(*2*) Rule 344, adopted on November 10, 1994.

(*3*) Rule 337, ''Surface Coating of Aerospace Vehicles and Components,'' revised on June 21, 2012.

(D) Ventura County Air Pollution Control District.

(*1*) Rule 74.15, adopted on November 8, 1994.

(*2*) Rule 74.26 and Rule 74.27, adopted on November 8, 1994.

(E) Placer County Air Pollution Control District.

(*1*) Rule 215, adopted on November 3, 1994.

(215) New and amended regulations for the following APCDs were submitted on February 24, 1995, by the Governor's designee.

(i) *Incorporation by reference.* (A) South Coast Air Quality Management District.

(*1*) Rules 1125 and 1126, adopted on January 13, 1995.

(*2*) Rule 1153 adopted on January 13, 1995.

(*3*) Rule 1106, adopted on January 13, 1995.

(*4*) Rule 1164, adopted on January 13, 1995.

(*5*) Rule 1124, adopted January 13, 1995.

(*6*) Previously approved on July 14, 1995 and now deleted without replacement for implementation in the Antelope Valley Air Pollution Control District Rule 1106.

(*7*) Previously approved on June 13, 1995 in paragraph (c)(215)(i)(A)(*1*) of this section and now deleted without replacement for implementation in the Antelope Valley Air Quality Management District Rules 1125 and 1126.

(B) Ventura County Air Pollution Control District.

(*1*) Rule 74.12 adopted on January 10, 1995.

(*2*) Rule 71 and Rule 71.5, adopted on December 13, 1994.

(*3*) Rule 74.18 adopted December 13, 1994.

(C) San Joaquin Valley Unified Air Pollution Control District.

(*1*) Rule 4403, adopted on February 16, 1995.

(D) Yolo-Solano Air Pollution Control District.

(*1*) Rule 2.26 adopted November 9, 1994.

(*2*) Rule 2.37 adopted on November 9, 1994.

(E) Imperial County Air Pollution Control District.

(*1*) Rule 925, adopted on November 29, 1994.

(F) Monterey Bay Unified Air Pollution Control District.

(*1*) Rule 421 adopted on December 21, 1994.

(G) Shasta County Air Quality Management District.

(*1*) Rule 3:8, ''Enhanced Monitoring and Compliance Certification for Major Sources as Defined by Title V of the Federal Clean Air Act,'' adopted on January 3, 1995.

(216) New and amended regulations for the following APCDs were submitted on March 31, 1995, by the Governor's designee.

(i) *Incorporation by reference.* (A) Mojave Desert Air Quality Management District.

(*1*) Rule 1116, adopted on February 22, 1995.

(*2*) Rule 221, adopted December 21, 1994.

(*3*) Rule 1159, adopted on February 22, 1995.

(*4*) Rule 1114 adopted February 22, 1995.

(B) Bay Area Air Quality Management District.

(*1*) Amended Regulation 2, Rule 1, Section 129 adopted on February 1, 1995; Amended Regulation 2, Rule 6, Sections 232, 234, 310, 311, 403, 404, 420, 421, 422, 423 adopted on February 1, 1995.

(217) New and amended regulations for the following APCDs were submitted on February 28, 1994, by the Governor's designee.

(i) *Incorporation by reference.* (A) Bay Area Air Quality Management District.

(*1*) Amended Regulation 2, Rule 1, Sections 102, 129, 204, 213, 214, 215, 216, 217, 218, 219, 302, 408, 411 adopted November 3, 1993; and New Regulation 2, Rule 6, Sections 206, 207, 210, 212, 213, 214, 218, 222, 230, 231, 301, 311, 401, 402, 403, 404, 420, 421, 422, 602 adopted November 3, 1993.

(B) Lake County Air Pollution Control District.

(1) New Regulation 12, section 12.200 (a4), (c2), (d1), (d2), (d3), (e3), (f1), (f2), (m1), (o1), (p1), (p2), (s3), and sections 12.800–12.850, adopted October 19, 1993.

(C) South Coast Air Quality Management District.

(*1*) Rules 204, 206, and 210 amended on October 8, 1993.

(218) New and amended regulations for the Bay Area Air Quality Management District were submitted on April 29, 1994 by the Governor's designee.

(i) *Incorporation by reference.* (A) New Regulation 2, Rule 6, Sections 310 and 423 adopted November 3, 1993.

(219) New and amended regulations for the following APCDs were submitted on April 13, 1995, by the Governor's designee.

(i) *Incorporation by reference.* (A) Santa Barbara County Air Pollution Control District.

(*1*) Rule 339, adopted December 15, 1994.

(220) New and amended regulations for the following APCDs were submitted on May 24, 1995, by the Governor's designee.

(i) *Incorporation by reference.* (A) Santa Barbara County Air Pollution Control District.

(*1*) Rule 323, adopted March 16, 1995.

(B) Placer County Air Pollution Control District.

(*1*) Rule 218, adopted on February 9, 1995.

(*2*) Rule 236 adopted on February 9, 1995.

(*3*) Rule 244, adopted on February 9, 1995.

(C) South Coast Air Quality Management District.

(*1*) Rule 1121, adopted on March 10, 1995.

(D) San Diego County Air Pollution Control District.

(*1*) Rule 1501, adopted on March 7, 1995.

(E) Ventura County Air Pollution Control District.

(*1*) Rule 34 adopted on March 14, 1995.

(221) New and amended regulations for the following APCDs were submitted on May 25, 1995 by the Governor's designee.

(i) *Incorporation by reference.* (A) Kern County Air Pollution Control District.

(*1*) Rule 411 and Rule 413, adopted on April 6, 1995.

(*2*) Rule 410.4, adopted on April 6, 1995.

(*3*) Rule 425.2, adopted on April 6, 1995.

(B) Butte County Air Quality Management District.

(*1*) Rule 1103, adopted on February 16, 1995.

(222) New and amended regulations for the following APCDs were submitted on June 16, 1995, by the Governor's designee.

(i) *Incorporation by reference.* (A) South Coast Air Quality Management District.

(*1*) Rules 1107, 1115, and 1171 adopted on May 12, 1995.

(*2*) Previously approved on July 14, 1995 and now deleted without replacement for implementation in the Antelope Valley Air Pollution Control District Rule 1115.

(B) El Dorado County Air Pollution Control District.

(*1*) Rule 234, adopted on April 25, 1995.

(C) Sacramento Metropolitan Air Quality Management District.

(*1*) Rule 411, adopted on February 2, 1995.

(*2*) Rule 413, adopted on April 6, 1995.

(*3*) Rule 412, adopted on June 1, 1995.

(D) San Diego County Air Pollution Control District.

(*1*) Rule 67.24, adopted on March 7, 1995.

(E) Butte County Air Quality Management District.

(*1*) Rule 403, adopted on November 9, 1993.

(*2*) Previously approved on May 2, 2001 in paragraph (c)(222)(i)(E)(*1*) of this section and now deleted with replacement in paragraph (c)(457)(i)(C)(*2*): Rule 403 ''Permit to Operate.''

(F) Imperial County Air Pollution Control District.

(*1*) Rule 910, ''Enhanced Monitoring,'' adopted March 21, 1995.

(223) Revised ozone transportation control measure (TCM) for the San Joaquin Valley submitted on March 2, 1995, by the Governor's designee.

(i) *Incorporation by reference.* (A) Railroad Grade Separations TCM, adopted on September 14, 1994.

(224) New and amended regulations for the following APCDs were submitted on August 10, 1995, by the Governor's designee.

(i) *Incorporation by reference.* (A) Sacramento Metropolitan Air Quality Management District.

(*1*) Rule 448 and rule 449, adopted on February 2, 1995.

(B) Ventura County Air Pollution Control District.

(*1*) Rule 70, adopted on May 9, 1995.

(*2*) Rule 220, adopted on May 9, 1995.

(*3*) Rule 74.5.2, adopted on May 5, 1995.

(C) Mojave Desert Air Quality Management District.

(*1*) Rules 1400, 1401, 1402, 1404. Adopted on June 28, 1995.

(*2*) Rule 103 amended on June 28, 1995.

(D) Monterey Bay Unified Air Pollution Control District.

(*1*) Rule 436, adopted on May 17, 1995.

(E) Santa Barbara County Air Pollution Control District.

(*1*) Amended Rule 370 adopted on June 15, 1995.

(225) New and amended regulations for the following APCDs were submitted on October 13, 1995 by the Governor's designee.

(i) *Incorporation by reference.* (A) South Coast Air Quality Management District.

(*1*) Rules 1130 and 1136 adopted September 8, 1995.

(*2*) Rule 462, revised on June 9, 1995.

(*3*) Rule 1166, adopted on July 14, 1995.

(*4*) Rule 1149, adopted on December 4, 1987 and amended on July 14, 1995.

(B) Placer County Air Pollution Control District.

(*1*) Rule 238, adopted June 8, 1995.

(*2*) Rule 212, adopted on June 8, 1995.

(*3*) Rule 239, revised June 8, 1995.

(*4*) Rule 235, adopted on June 8, 1995.

(*5*) Rule 216 adopted on June 8, 1995.

(C) El Dorado County Air Pollution Control District.

(*1*) Rules 236 and 237, adopted on July 25, 1995 and June 27, 1995, respectively.

(*2*) Rule 235 adopted on June 27, 1995.

(*3*) Rule 520 adopted on June 27, 1995.

(D) San Joaquin Valley Unified Air Pollution Control District.

(*1*) Rule 4602, adopted June 15, 1995.

(E) Monterey Bay Unified Air Pollution Control District.

(*1*) Rule 431, adopted on August 16, 1995.

(F) Santa Barbara County Air Pollution Control District.

(*1*) Rule 330, adopted on April 21, 1995.

(G) Ventura County Air Pollution Control District.

(*1*) Rule 74.15.1 revised on June 13, 1995.

(*2*) Rules 10, 11, 12, 13, 14, 15 and 16 adopted on June 13, 1995.

(H) Mohave Desert Air Quality Management District.

(*1*) Rule 222, adopted on July 31, 1995.

(226) Air Quality Management Plan for the following APCD was submitted on September 11, 1991, by the Governor's designee.

(i) *Incorporation by reference.* (A) Great Basin Unified Air Pollution Control District.

(*1*) Air Quality Management Plan for the Mammoth Lakes PM–10 Planning Area adopted December 12, 1990.

(227) New regulation for the following APCD was submitted on October 18, 1995, by the Governor's designee.

(i) *Incorporation by reference.* (A) San Joaquin Valley Unified Air Pollution Control District.

(*1*) Rule 2530, adopted on June 15, 1995.

(228) Air Quality Management Plans for the following APCD were submitted on January 9, 1992, by the Governor's designee.

(i) *Incorporation by reference.* (A) Great Basin Unified Air Pollution Control District.

(*1*) Revisions to the Air Quality Management Plan for Mammoth Lakes PM–10 Planning Area adopted November 6, 1991.

(*i*) Rule 431 adopted November 6, 1991.

(*ii*) Town of Mammoth Lakes Municipal Code Chapter 8.30 dated October 2, 1991.

(*iii*) Previously approved on October 2, 1991 in paragraph (c)(228)(i)(A)(*1*)(*ii*) of this section and now deleted with replacement in paragraph (c)(457)(i)(I)(*2*) of this section, Town of Mammoth Lakes Municipal Code Chapter 8.30 dated October 2, 1991.

(229) New and amended regulations for the following APCDs were submitted on January 31, 1996, by the Governor's designee.

(i) *Incorporation by reference.* (A) South Coast Air Quality Management District.

(*1*) Rule 461, adopted on September 8, 1995.

(*2*) Rule 701, adopted on September 9, 1995.

(230) New and amended regulations for the following APCDs were submitted on March 26, 1996, by the Governors designee.

(i) *Incorporation by reference.* (A) Ventura County Air Pollution Control District.

(*1*) Rule 74.7, adopted on October 10, 1995.

(*2*) Rule 74.23, adopted on October 10, 1995.

(*3*) Rule 74.29, adopted on October 10, 1995.

(B) South Coast Air Quality Management District.

(*1*) Rule 1134, adopted on December 7, 1995.

(*2*) Rule 102 amended on November 17, 1995.

(C) Kern County Air Pollution Control District.

(*1*) Rule 427, adopted on January 25, 1996.

(*2*) Rule 427 adopted on July 2, 1998.

(D) San Joaquin Valley Unified Air Pollution Control District.

(*1*) Rule 4352, amended on October 19, 1995.

(*2*) Rule 4304 adopted on October 19, 1995.

(*3*) Rule 4351 adopted on October 19, 1995.

(E) Butte County Air Quality Management District.

(*1*) Rule 422, adopted on September 18, 1990.

(*2*) Previously approved on May 2, 2001 in paragraph (c)(230)(i)(E)(*1*) of this section and now deleted without replacement Rule 422.

(231) New and amended regulations for the following APCDs were submitted on May 10, 1996, by the Governor's designee.

(i) *Incorporation by reference.* (A) Monterey Bay Unified APCD.

(*1*) Rules 207 and 215, adopted on March 20, 1996.

(B) Kern County Air Pollution Control District.

(*1*) Rule 102 and Rule 410.3, adopted on March 7, 1996.

(*2*) Rule 410.1, Rule 410.5, Rule 411, and Rule 414.5 amended on March 7, 1996.

(*3*) Rule 414, adopted on March 7, 1996.

(*4*) Rule 410.4A, adopted on May 6, 1991 and amended on March 7, 1996 and Rule 410.7, adopted on June 29, 1981 and amended on March 7, 1996.

(*5*) [Reserved]

(*6*) Rule 410.4, adopted on June 26, 1979 and amended on March 7, 1996.

(*7*) Rules 413 adopted on April 18, 1972 and Rule 414.1 adopted on January 9, 1979, both amended on March 7, 1996.

(*8*) Previously approved on January 13, 2000, in paragraph (c)(231)(i)(B)(*6*) of this section and now deleted with replacement in paragraph (c)(447)(i)(D)(*2*) of this section, Rule 410.4, ''Surface Coating of Metal Parts and Products,'' amended on March 7, 1996.

(*9*) Previously approved on November 13, 1998 in paragraph (c)(231)(i)(B)(*4*) and now deleted with replacement in (c)(447)(i)(D)(*5*) Rule 410.4A amended on March 7, 1996.

(C) Mojave Desert Air Quality Management District.

(*1*) Rule 2002, adopted on October 26, 1994.

(D) Butte County Air Quality Management District.

(*1*) Rule 1105, adopted on February 15, 1996.

(E) Great Basin Unified Air Pollution Control District.

(*1*) Rules 218 and 219, adopted on December 4, 1995.

(232) New regulations for the following APCD were submitted on March 21, 1994, by the Governor's designee:

(i) *Incorporation by reference.* (A) South Coast Air Quality Management District.

(*1*) Regulation XX, adopted October 15, 1993.

(*2*) Previously approved on November 8, 1996 now deleted without replacement for implementation in the Antelope Valley Air Pollution Control District, Regulation XX.

(233) New and amended plans for the following agencies were submitted on December 29, 1994, by the Governor's designee.

(i) *Incorporation by reference.* (A) South Coast Air Quality Management District.

(*1*) 15% Rate-of-Progress plan and Post-1996 Rate-of-Progress plan for the Los Angeles-South Coast Air Basin Area, as contained in the ''Rate-of-Progress Plan Revision: South Coast Air Basin & Antelope Valley & Coachella/San Jacinto Planning Area,'' adopted on December 9, 1994.

(B) Sacramento Metropolitan Air Quality Management District.

(*1*) Emissions inventory, Post-1996 Rate-of-Progress plan, modeling, and ozone attainment demonstration, as contained in ''Sacramento Area Attainment and Rate-of-Progress Plans,'' adopted by Sacramento Metropolitan Air Quality Management District on December 1, 1994; by Feather River Air Quality Management District on December 12, 1994; by El Dorado County Air Pollution Control District on December 13, 1994; by Yolo-Solano Air Pollution Control District on December 14, 1994; and by Placer County Air

Pollution Control District on December 20, 1994.

(234) The California Vehicle Inspection and Maintenance Program was submitted on January 22, 1996, by the Governor's designee.

(i) *Incorporation by reference.* (A) California Air Resources Board.

(*1*) Motor Vehicle Inspection and Maintenance Program adopted on January 22, 1996.

(*i*) Health and Safety Code: Division 26, Part 5 § 39032.5; Chapter 5. Motor Vehicle Inspection Program, Article 1, Article 2, Article 3, Article 4, Article 5, Article 6, Article 7, Article 8, Article 9.

(*ii*) Business and Professions Code, Chapter 20.3, Automotive Repair, Article 4, § 9886, § 9886.1, § 9886.2, § 9886.4.

(*iii*) Vehicle Code § 4000.1, § 4000.2, § 4000.3, § 4000.6.

(*iv*) Title 16, California Code or Regulations, Division 33, Bureau of Automotive Repair, Article 5.5, Motor Vehicle Inspection Program, § 3340.1, § 3340.5, § 3340.6, § 3340.10, § 3340.15, § 3340.16, § 3340.16.5, § 3340.16.6, § 3340.17, § 3340.18, § 3340.22, § 3340.22.1, § 3340.22.2, § 3340.22.3, § 3340.23, § 3340.24, § 3340.28, § 3340.29, § 3340.30, § 3340.31, § 3340.32, § 3340.32.1, § 3340.33, § 3340.33.1, § 3340.35, § 3340.35, § 3340.36, § 3340.41, § 3340.41.3, § 3340.41.5, § 3340.42, § 3340.42.1., § 3340.50, § 3340.50.1, § 3340.50.3, § 3340.50.4, § 3340.50.5.

(*2*) Previously approved on January 8, 1997, in paragraph (234)(i)(A)(*1*)(*i*) of this section, and now deleted without replacement: Health and Safety Code: Division 26, Part 5, Chapter 5 (Motor Vehicle Inspection Program), Article 1, sections 44001.6, 44001.7, 44003.1, 44006; Article 2, sections 44015.3, 44022, 44023; Article 3, section 44031; Article 8, sections 44081.5, 44082, 44083.

(*3*) Previously approved on January 8, 1997, in paragraph (234)(i)(A)(*1*)(*iv*) of this section, and now deleted without replacement: Title 16, California Code of Regulations, Division 33, Bureau of Automotive Repair, Article 5.5, Motor Vehicle Inspection Program, sections 3340.16.6, 3340.42.1.

(235) New and amended regulations for the following APCD were submitted on December 10, 1993, by the Governor's designee.

(i) *Incorporation by reference.* (A) San Joaquin Valley Unified Air Pollution Control District.

(*1*) Rule 4901, adopted on July 15, 1993.

(236) New and amended plans for the following agencies were submitted on June 13, 1996, by the Governor's designee.

(i) *Incorporation by reference.* (A) California Air Resources Board.

(*1*) Letter dated June 13, 1996, from James D. Boyd to David Howekamp, including ''Corrections to State and Local Measures'' (Attachment A) and ''Summary Emission Reduction Spreadsheets'' (Attachment C).

(237) New and amended plans for the following agencies were submitted on July 10, 1996, by the Governor's designee.

(i) *Incorporation by reference.* (A) South Coast Air Quality Management District.

(*1*) Revised rule adoption schedule, adopted on April 12, 1996.

(238) New and amended plans for the following agencies were submitted on July 12, 1996, by the Governor's designee.

(i) *Incorporation by reference.* (A) Ventura County Air Pollution Control District.

(*1*) ''Revised Rule Adoption and Implementation Schedule'' (Table 4–2) and ''Architectural Coatings'' (Appendix E–95, Tables E–43 and E–45) contained in ''Ventura County 1995 Air Quality Management Plan Revision,'' adopted on December 19, 1995.

(B) San Joaquin Valley Unified Air Pollution Control District.

(*1*) Post-1996 Rate-of-Progress plan, as contained in ''San Joaquin Valley Revised Post-1996 Rate-of-Progress Plans,'' adopted on September 20, 1995.

(239) New and amended regulations for the following APCDs were submitted on July 23, 1996, by the Governor's designee:

(i) *Incorporation by reference.* (A) Mojave Desert Air Quality Management District.

(*1*) Rules 1300–1306, adopted on March 25, 1996.

(*2*) Rule 1115, adopted on March 2, 1992, and amended on April 22, 1996.

(B) South Coast Air Quality Management District.

(*1*) Rule 1128, adopted on May 4, 1979 and amended on March 8, 1996, and Rule 1130, adopted on October 3, 1980 and amended on March 8, 1996.

(C) Kern County Air Pollution Control District.

(*1*) Rules 101, 112, 113, 114, and 115 amended on May 2, 1996.

(*2*) Rules 108 and 108.1 adopted on May 2, 1996.

(*3*) Rule 201, adopted on April 18, 1972 and amended on May 2, 1996.

(*4*) Rules 202.1, 209.1, 210.2, and 210.5, adopted on December 15, 1980, April 5, 1982, December 28, 1976, and November 18, 1985, respectively, and amended on May 2, 1996.

(*5*) Rule 205, (a part of regulation II), ''Permit Renewal,'' adopted on April 18, 1972 and amended on May 2, 1996.

(*i*) Resolution of May 2, 1996.

(*6*) Rule 103.1, Inspection of Public Records,'' amended on May 2, 1996.

(D) Ventura County Air Pollution Control District.

(*1*) Rule 2 amended on April 9, 1996.

(E) Bay Area Air Quality Management District.

(*1*) Rule 9–7 adopted on September 15, 1993, Rule 9–8 adopted on January 20, 1993, Rule 9–9 adopted on September 21, 1994, and Rule 9–12 adopted on January 19, 1994.

(*2*) Rule 8–4, Rule 8–11, Rule 8–12, Rule 8–13, Rule 8–14, Rule 8–19, Rule 8–20, Rule 8–23, Rule 8–29, Rule 8–31, Rule 8–32, Rule 8–38, Rule 8–43, Rule 8–45, Rule 8–50 amended on December 20, 1995.

(*3*) Rule 8–3, adopted on March 1, 1978, revised on December 20, 1995.

(*4*) Rule 9–11 amended November 15, 1995.

(*5*) Rule 8–26, adopted on May 7, 1980 and amended on December 20, 1995.

(*6*) Rule 9–10 adopted on January 5, 1994.

(*7*) Manual of Procedures, volume I, section 5, adopted on September 16, 1993.

(F) San Joaquin Valley Unified Air Pollution Control District.

(*1*) Rules 8010, 8020, 8030, 8040, 8060, and 8070 adopted on April 25, 1996.

(240) New and amended regulations for the following APCD were submitted on August 28, 1996 by the Governor's designee.

(i) *Incorporation by reference.* (A) South Coast Air Quality Management District.

(*1*) Rules 212, 1301, 1302, 1309, 1309.1, 1310, and 1313, adopted on December 7, 1995, Rule 1303, adopted on May 10, 1996, and Rules 1304 and 1306, adopted on June 14, 1996.

(*2*) Rules 2000, 2001, 2002, 2004, 2006, 2007, 2011, 2011—Appendix A, 2012, 2012—Appendix A, and 2015 adopted on October 15, 1993 and amended on December 7, 1995.

(*3*) Rule 2012(j)(3)—Testing Guidelines (Protocol) for Alternative Nitrogen Oxides Emission Rate Determination at Process Units, dated March 31, 1994, adopted on December 7, 1995.

(*4*) Rule 2005 adopted on October 15, 1993 and amended on May 10, 1996.

(*5*) Rule 1136 adopted on September 16, 1983 and amended on June 14, 1996.

(241) New and amended regulations for the following APCD were submitted on October 18, 1996 by the Governor's designee.

(i) *Incorporation by reference.* (A) San Diego County Air Pollution Control District.

(*1*) Rules 2, Definitions; 67.0, Architectural Coatings; 67.1, Alternative Emission Control Plans; 67.2, Dry Cleaning Equipment Using Petroleum-Based Solvents; 67.3, Metal Parts and Products Coating Operations; 67.5, Paper, Film, and Fabric Coating Operations; 67.7, Cutback and Emulsified Asphalts; 67.12, Polyester Resin Operations; 67.15, Pharmaceutical and Cosmetic Manufacturing Operations; 67.16, Graphic Arts Operations; 67.17, Storage of Materials Containing Volatile Organic Compounds; 67.18, Marine Coating Operations; and 67.24, Bakery Ovens, adopted on May 15, 1996.

(*2*) Rule 67.4, revised on May 15, 1996.

(*3*) Rule 66, adopted on July 1, 1972, revised on July 25, 1995.

(*4*) Rule 19.3 adopted on May 15, 1996.

(*5*) Rule 67.19, adopted May 15, 1996.

(*6*) Rule 24, ''Temporary Permit to Operate,'' adopted on March 20, 1996.

(*7*) Previously approved on March 27, 1997 in paragraph (c)(241)(i)(A)(*1*) of this section and now deleted with replacement by Rule 67.12.1 in paragraph (c)(488)(i)(A)(*2*) of this section, Rule 67.12, ''Polyester Resin Operations,'' adopted on May 15, 1996.

(B) Yolo-Solano Air Quality Management District.

(*1*) Rule 2.27, revised on August 14, 1996.

(C) Ventura County Air Pollution Control District.

(*1*) Rule 74.19.1, adopted on June 11, 1996.

(*2*) Rules 74.6.1, 74.6.2, and 74.6.3, adopted on July 9, 1996.

(*3*) Rule 23 adopted on July 9, 1996.

(D) Kern County Air Pollution Control District.

(*1*) Rules 416 and 417, adopted on April 18, 1972 and amended on July 11, 1996.

(242) New and amended regulations for the following APCDs were submitted on November 26, 1996, by the Governor's designee.

(i) *Incorporation by reference.* (A) Mojave Desert AQMD.

(*1*) Rule 1118, adopted on October 28, 1996.

(*2*) Previously approved on August 17, 1998 in paragraph (c)(242)(i)(A)(*1*) of this section and now deleted with replacement in paragraph (c)(485)(B)(*1*), Rule 1118, adopted on October 28, 1996.

(B) South Coast Air Quality Management District.

(*1*) Rule 1113, adopted on September 2, 1977 and amended on November 8, 1996.

(*2*) Rule 1176, adopted on November 3, 1989 and amended on September 13, 1996.

(243) Transportation Air Quality Conformity Procedures and Transportation Conformity Consultation Procedures for the following AQMD were submitted on December 16, 1996, by the Governor's designee.

(i) *Incorporation by reference.* (A) Bay Area Air Quality Management District.

(*1*) ''The San Francisco Bay Area Transportation Air Quality Conformity Procedures,'' which includes sections 93.100-93.104 and sections 93.106–93.136, adopted on November 6, 1996.

(*2*) ''The San Francisco Bay Area Transportation Air Quality Conformity Interagency Consultation Procedures,'' adopted on November 6, 1996.

(244) New and amended regulations for the following APCDs were submitted on March 3, 1997, by the Governor's designee.

(i) *Incorporation by reference.* (A) Monterey Bay Unified Air Pollution Control District.

(*1*) Rule 101 revised on November 13, 1996.

(*2*) Rule 404, adopted on October 16, 1996.

(*3*) Rule 207, amended on December 18, 1996.

(*4*) Rule 434, adopted on December 18, 1996.

(*5*) Rule 426 revised December 18, 1996.

(B) San Diego County Air Pollution Control District.

(*1*) Amended Rule 10, adopted July 25, 1995.

(C) Mojave Desert Air Quality Management District.

(*1*) Rule 1114 adopted on March 2, 1992 and amended on November 25, 1996.

(*2*) Rule 403.1, ''Fugitive Dust Control for the Searles Valley Planning Area'', adopted on June 22, 1994 and amended on November 25, 1996.(D) South Coast Air Quality Management District.

(*1*) Rule 1130.1, adopted on August 2, 1991 and amended on December 13, 1996.

(E) San Joaquin Valley Unified Air Pollution Control District.

(*1*) Rule 6030 adopted on May 21, 1992; amended on November 13, 1996.

(*2*) Rule 4305 adopted on December 19, 1996.

(F) Santa Barbara County Air Pollution Control District.

(*1*) Rule 323 revised July 18, 1996.

(G) Ventura County Air Pollution Control District.

(*1*) Rules 74.12, 74.13, 74.18, 74.19, 74.24, and 74.30, amended on September 10, 1996.

(*2*) Rule 74.20, revised on January 14, 1997.

(245) New and amended regulations for the following APCDs were submitted on March 26, 1997, by the Governor's designee.

(i) *Incorporation by reference.* (A) Yolo-Solano Air Quality Management District.

(*1*) Rule 3.4, adopted on December 11, 1996.

(B) San Diego County Air Pollution Control District.

(*1*) Amended Rule 21, adopted November 29, 1994.

(C) Monterey Bay Unified Air Pollution Control District.

(*1*) Rule 430, amended on January 15, 1997.

(*2*) Previously approved on February 9, 1999 in (245)(i)(C)(*l*) and now deleted without replacement Rule 430.

(246) New and amended regulations for the following APCDs were submitted on October 28, 1996, by the Governor's designee.

(i) *Incorporation by reference.* (A) Northern Sierra Air Quality Management District.

(*1*) Rules 101, 202, 203, 204, 206, 207, 208, 209, 210, 221, 222, 223, 225, 300, 301, 314, 315, and 317, adopted on September 11, 1991, Rule 102 adopted on May 11, 1994, Rule 313 adopted on June 10, 1992, and Rule 316 adopted on August 14, 1996.

(*2*) Rule 211, adopted on September 11, 1991.

(*3*) Previously approved on September 16, 1997 in paragraph (c)(246)(i)(A)(*1*) of this section and now deleted without replacement, Rule 223.

(*4*) Rule 505, ''Conditional Approval,'' Rule 510, ''Separation of Emissions,'' Rule 511, ''Combination of Emissions,'' Rule 512, ''Circumvention,'' Rule 515, ''Provision of Sampling and Testing Facilities,'' and Rule 517, ''Transfer,'' adopted on September 11, 1991.

(*5*) Rule 501, ''Permit Required'' and Rule 513, ''Source Recordkeeping,'' amended on May 11, 1994.

(247) New and amended plans for the following agency were submitted on February 5, 1997, by the Governor's designee.

(i) *Incorporation by reference.* (A) South Coast Air Quality Management District.

(*1*) Carbon monoxide emissions inventory, VMT forecasts and commitments to monitor actual VMT levels and revise and replace the VMT projections as needed in the future, as contained in the South Coast 1997 Air Quality Management Plan.

(*2*) Nitrogen dioxide attainment plan and maintenance plan, as contained in the South Coast 1997 Air Quality Management Plan, adopted on November 15, 1996.

(*3*) Baseline and projected emissions inventories and ozone attainment demonstration, as contained in the South Coast 1997 Air Quality Management Plan for ozone.

(*4*) Baseline and projected emissions inventories, SCAQMD commitment to adopt and implement control measures, reasonable further progress, contingency measures, attainment demonstration, PM–10 attainment date extension request to December 31, 2006, as contained in the South Coast 1997 Air Quality Management Plan, with respect to PM–10.

(*5*) SCAQMD commitment to adopt and implement control measures, as contained in the Coachella Request for Redesignation and Maintenance Plan for PM–10.

(*6*) Appendix V, page V–5–4, Table 5–2—''Carbon Monoxide Emissions (tons/day) Projected from 1993 through 2000 for the South Coast Air Basin.''

(248) New and amended regulations for the following APCDs were submitted on August 1, 1997, by the Governor's designee.

(i) *Incorporation by reference.* (A) San Diego County Air Pollution Control District

(*1*) Rule 67.10 adopted on June 25, 1997.

(*2*) Rule 67.9, adopted on April 30, 1997.

(*3*) Rules 52, 53, 54, amended on January 27, 1997.

(B) South Coast AQMD.

(*1*) Rule 1124, adopted on December 13, 1996.

(*2*) Rule 403, amended on February 14, 1997, and Rule 1186, adopted on February 14, 1997.

(*3*) Rule 1145, adopted on July 8, 1983 and amended on February 14, 1997.

(C) Placer County Air Pollution Control District.

(*1*) Rule 239, adopted on November 3, 1994 and amended on February 13, 1997.

(D) Mojave Desert Air Quality Management District.

(*1*) Rule 1157, amended May 19, 1997.

(E) Ventura County Air Pollution Control District.

(*1*) Rule 70 revised on May 13, 1997.

(F) Bay Area Air Quality Management District.

(*1*) Regulation 8, Rule 45, adopted on November 6, 1996.

(249) New and amended regulations for the following APCD's were submitted on September 8, 1997, by the Governor's designee.

(i) *Incorporation by reference.* (A) South Coast Air Quality Management District.

(*1*) Rule 1122, adopted on March 2, 1979 and amended on July 11, 1997.

(*2*) Rule 701, amended on June 13, 1997.

(B) Kern County Air Pollution Control District.

(*1*) Rule 425.2 adopted on October 13, 1994 and amended on July 10, 1997.

(250) New regulations for the following APCD were submitted on October 31, 1997, by the Governor's designee.

(i) *Incorporation by reference.* (A) Santa Barbara County Air Pollution Control District.

(*1*) Rule 1301 adopted on September 18, 1997.

(251) New and amended plans for the following agency were submitted on November 5, 1997, by the Governor's designee.

(i) *Incorporation by reference.* (A) Ventura County Air Pollution Control District.

(*1*) Commitments to adopt and implement control measures contained in the Ventura 1997 Air Quality Management Plan, adopted on October 21, 1997.

(252) Air Quality Management Plan for the following APCD was submitted on December 28, 1992, by the Governor's designee.

(i) *Incorporation by reference.* (A) San Joaquin Valley Unified Air Pollution Control District.

(*1*) Federal 1992 Air Quality Attainment Plan for Carbon Monoxide and Appendices adopted on November 18, 1992.

(253) Carbon Monoxide Redesignation Request and Maintenance Plan for ten federal planning areas submitted on July 3, 1996, by the Governor's designee.

(i) *Incorporation by reference.* (A) California Air Resources Board. (*1*) Carbon Monoxide Redesignation Request and Maintenance Plan for the following areas: Bakersfield Metropolitan Area, Chico Urbanized Area, Fresno Urbanized Area, Lake Tahoe North Shore, Lake Tahoe South Shore, Modesto Urbanized Area, Sacramento Area, San Diego Area, San Francisco-Oakland-San Jose Area, and Stockton Urbanized Area adopted on April 26, 1996.

(254) New and amended regulations for the following APCDs were submitted on March 10, 1998, by the Governor's designee.

(i) *Incorporation by reference.* (A) San Joaquin Valley Unified Air Pollution Control District

(*1*) Rule 4401 adopted on January 15, 1998.

(*2*) Rule 4605, adopted on December 19, 1991 and amended on December 19, 1996.

(*3*) Rules 4602 and 4607, adopted on April 11, 1991 and amended on September 17, 1997.

(*4*) Rule 4661, adopted on December 17, 1992.

(*5*) Rule 4701 adopted on December 19, 1996, and Rule 4703 adopted on October 16, 1997.

(B) Northern Sonoma County Air Pollution Control District.

(*1*) Rule 130 amended on July 25, 1995.

(*2*) Previously approved on February 9, 1999 in paragraph (c)(254)(i)(B)(*1*) of this section and now deleted without replacement, Rule 130.

(C) Santa Barbara County Air Pollution Control District.

(*1*) Rule 102 amended on April 17, 1998.

(*2*) Rule 339, adopted on November 5, 1991 and revised on April 17, 1997.

(*3*) Rule 321, adopted on February 24, 1971 and revised on September 18, 1997.

(*4*) Rule 342 amended on April 17, 1997.

(*5*) Rule 316 revised on April 17, 1997.

(*6*) Rule 203, ''Transfer,'' revised April 17, 1997.

(*7*) Rule 204, ''Applications,'' revised April 17, 1997.

(D) South Coast Air Quality Management District.

(*1*) Rule 102 amended on June 13, 1997.

(*2*) Rule 1151, adopted on July 8, 1988 and amended on June 13, 1997, and Rule 1171, adopted on August 2, 1991 and amended on June 13, 1997.

(*3*) Rule 1302, amended December 7, 1995.

(*4*) Rule 1134 adopted on August 8, 1997.

(*5*) Rule 1138, adopted on November 14, 1997.

(E) Antelope Valley Air Pollution Control District.

(*1*) Resolution No. 97–01 dated July 1, 1997.

(*2*) Rules 101 and 102 amended on August 19, 1997 and Rule 103 amended on September 16, 1997.

(*3*) Rules 201, 203, 204, 205, and 217, adopted on January 9, 1976 and amended on August 19, 1997.

(F) Bay Area Air Quality Management District.

(*1*) Regulation 5, adopted on November 2, 1994.

(G) Monterey Bay Unified Air Pollution Control District.

(*1*) Rule 431, adopted on December 17, 1997.

(H) Mojave Desert Air Quality Management District.

(*1*) Rules 474, 475, and 476 adopted on August 25, 1997.

(*2*) Rule 1158, adopted on February 22, 1995 and amended on August 25, 1997.

(I) Sacramento Metropolitan Air Quality Management District.

(*1*) Rule 414, adopted August 1, 1996.

(J) Lake County Air Quality Management District.

(*1*) Rule 640, as amended on July 15, 1997; and Rule 1350, adopted on October 15, 1996.

(*2*) Sections (Rules) 433, adopted on July 15, 1997.

(K) Ventura County Air Pollution Control District.

(*1*) Rule 59, adopted on October 6, 1969 and amended on July 15, 1997.

(L) Great Basin Unified Air Pollution Control District.

(*1*) Rule 432, adopted on May 8, 1996.

(255) New and amended regulations for the following APCD's were submitted on May 18, 1998, by the Governor's designee.

(i) *Incorporation by reference.* (A) Sacramento Metropolitan Air Quality Management District.

(*1*) Rule 450, adopted on July 23, 1981 and amended on December 5, 1996, and Rule 459, adopted on December 7, 1995 and amended on October 2, 1997.

(*2*) Rules 101, 442, 443, 447, 452, 456, and 458, adopted on September 5, 1996.

(*3*) Rule 454, adopted on June 5, 1979 and amended on April 3, 1997.

(*4*) Rule 413, amended May 1, 1997.

(*5*) Rule 449, adopted on April 3, 1997.

(*6*) Rule 105, Emission Statement, adopted on April 20, 1993, and amended September 5, 1996.

(*7*) Previously approved on November 9, 1998, in paragraph (c)(255)(i)(A)(*2*) of this section and now deleted with replacement in paragraph (c)(474)(i)(B)(*1*) of this section, Rule 442, adopted on September 5, 1996.

(B) North Coast Unified Air Quality Management District.

(*1*) Rule 130 amended September 26, 1997.

(C) San Joaquin Valley Unified Air Pollution Control District.

(*1*) Rule 1020, amended December 18, 1997.

(D) Lake County Air Quality Management District.

(*1*) Rule 1002, as amended on March 19, 1996.

(*2*) Section (Rule) 439.5, adopted on July 15, 1997.

(E) Placer County Air Pollution Control District.

(*1*) Rule 102, adopted June 19, 1997.

(F) South Coast Air Quality Management District.

(*1*) Rule 1146.2, adopted on January 9, 1998.

(G) Ventura County Air Pollution Control District.

(*1*) Rules 26.1, 26.2, 26.3, 26.4, 26.5, 26.6 and 26.10 adopted on January 13, 1998.

(*2*) Previously approved on December 7, 2000, in paragraph (c)(255)(i)(G)(*1*) of this section and now deleted without replacement Rule 26.10.

(256) New and amended regulations for the following APCDs were submitted on June 23, 1998, by the Governor's designee.

(i) *Incorporation by reference.* (A) Bay Area Air Quality Management District.

(*1*) Regulation 1, revised on November 3, 1993.

(*2*) Rule 8–51, adopted on November 18, 1992 and amended on January 7, 1998.

(B) San Diego County Air Pollution Control District.

(*1*) Rule 50, adopted on August 13, 1997.

(C) Kern County Air Pollution Control District.

(*1*) Rule 410.3, adopted on June 26, 1979 and revised on May 7, 1998.

(*2*) Rule 409, adopted on April 18, 1972, as amended on May 7, 1998.

(D) Antelope Valley Air Pollution Control District.

(*1*) Rule 701 was amended on January 20, 1998.

(E) El Dorado County Pollution Control District .

(*1*) Rule 239 adopted on March 24, 1998.

(F) Ventura County Air Pollution Control District.

(*1*) Rule 74.10, adopted on September 29, 1981 and amended on March 10, 1998.

(G) Sacramento Metropolitan Air Quality Management District.

(*1*) Rule 447 amended on April 2, 1998.

(257) Plan revisions for the Coachella Valley Planning Area were submitted on February 16, 1995, by the Governor's designee.

(i) *Incorporation by reference.* (A) Fugitive dust control ordinances for: City of Cathedral City Ordinance No. 377, adopted on February 18, 1993; City of Coachella Ordinance No. 715, adopted on October 6, 1993; City of Desert Hot Springs Ordinance No. 93–2, adopted on May 18, 1993; City of Indian Wells Ordinance No. 313, adopted on February 4, 1993; City of Indio Ordinance No. 1138, adopted on March 17, 1993; City of La Quinta Ordinance No. 219, adopted on December 15, 1992; City of Palm Desert Ordinance No. 701, adopted on January 14, 1993; City of Palm Springs Ordinance No. 1439, adopted on April 21, 1993; City of Rancho Mirage Ordinance No. 575, adopted on August 5, 1993; and County of Riverside Ordinance No. 742, adopted on January 4, 1994.

(258) New and amended regulations for the following APCD's were submitted on June 3, 1997, by the Governor's designee.

(i) *Incorporation by reference.* (A) Monterey Bay Unified Air Pollution Control District.

(*1*) Rule 433, adopted on June 15, 1994 and revised on March 26, 1997.

(*2*) Rule 215, amended on March 26, 1997.

(*3*) Rule 425, adopted on March 26, 1997.

(259) New and amended regulations for the following APCDs were submitted on December 3, 1998, by the Governor's designee.

(i) *Incorporation by reference.* (A) Yolo-Solano Air Quality Management District.

(*1*) Rule 10.3, adopted on February 8, 1995.

(260) New and amended regulations for the following APCDs were submitted on October 27, 1998, by the Governor's designee.

(i) *Incorporation by reference.* (A) Sacramento Metropolitan Air Quality Management District.

(*1*) Rule 101, amended on September 3, 1998.

(B) San Joaquin Valley Unified Air Pollution Control District.

(*1*) Rule 2020 adopted on September 17, 1998.

(C) Kern County Air Pollution Control District.

(*1*) Rule 208, originally adopted on April 18, 1972, amended on September 17, 1998.

(261) New and amended regulations for the following APCDs were submitted on January 12, 1999, by the Governor's designee.

(i) *Incorporation by reference.* (A) Monterey Bay Unified Air Pollution Control District.

(*1*) Rule 101, adopted November 12, 1998.

(262) New and amended regulations for the following APCDs were submitted on February 16, 1999, by the Governor's designee.

(i) *Incorporation by reference.* (A) Bay Area Air Quality Management District.

(*1*) Regulation 1, adopted on October 7, 1998.

(*2*) Previously approved on June 28, 1999 in paragraph (c)(262)(i)(A)(*1*) of this section and now deleted without replacement Regulation 1, Rules 402 and 402.1.

(B) Ventura County Air Pollution Control District.

(*1*) Rule 2, adopted November 10, 1998.

(*2*) Rule 74.24.1, adopted on November 10, 1998.

(*3*) Rule 74.6, revised on November 10, 1998.

(C) South Coast Air Quality Management District.

(*1*) Rule 1107, adopted on June 1, 1979 and amended on August 14, 1998.

(*2*) Rule 1151, adopted on December 11, 1998.

(D) San Joaquin Valley Unified Air Pollution Control District.

(*1*) Rule 4606 adopted on December 19, 1991 and amended on December 17, 1998.

(E) Antelope Valley Air Pollution Control District.

(*1*) Rule 1171, adopted on November 17, 1998.

(*2*) [Reserved]

(*3*) Rule 226, adopted on March 17, 1998 and amended on July 21, 1998.

(263) New and amended regulations for the following APCDs were submitted on May 13, 1999, by the Governor's designee.

(i) *Incorporation by reference.* (A) South Coast Air Quality Management District.

(*1*) Rule 1103, adopted on March 12, 1999.

(*2*) Rule 102 adopted on February 4, 1977 and amended on June 12, 1998.

(*3*) Rules 403 and 1186, amended on December 11, 1998.

(B) Santa Barbara County Air Pollution Control District.

(*1*) Rule 102 adopted on January 21, 1999.

(*2*) Rule 351 adopted on August 24, 1993 and amended on August 20, 1998.

(C) Sacramento Metropolitan Air Quality Management District.

(*1*) Rule 464, adopted on July 23, 1998.

(D) Tehama County Air Pollution Control District.

(*1*) Rule 4:31 adopted on March 14, 1995, Rule 4:34 adopted on June 3, 1997, and Rule 4.37 adopted on April 21, 1998.

(*2*) Rule 4.14 adopted on November 3, 1998.

(264) New and amended regulations for the following APCDs were submitted on June 3, 1999, by the Governor's designee.

(i) *Incorporation by reference.* (A) South Coast Air Quality Management District.

(*1*) Rule 462, adopted on May 14, 1999.

(*2*) Rule 1106.1, adopted on May 1, 1992, and amended on February 12, 1999.

(B) Yolo-Solano Air Quality Management District.

(*1*) Rule 2.30, adopted on April 14, 1999.

(C) Ventura County Air Pollution Control District.

(*1*) Rule 64, adopted on April 13, 1999.

(*2*) Rule 103 adopted on February 9, 1999.

(D) Monterey Bay Unified Air Pollution Control District.

(*1*) Rule 1002, adopted on April 21, 1999.

(265) New and amended plans for the following agencies were submitted on May 20, 1999, by the Governor's designee.

(i) *Incorporation by reference.* (A) California Air Resources Board.

(*1*) Executive Order G–99–037, dated May 20, 1999, State commitment to continue working with U.S. EPA and the affected parties to achieve the emission reductions identified in the SIP for federal measures, and to adopt by December 31, 2000, and submit as a SIP revision, a revised attainment demonstration for the federal one-hour ozone standard in the South Coast Air Basin, and adopt by December 31, 2001, control measures needed to achieve any additional emission reductions which are determined to be appropriate for ARB; Attachment A, update to the 1994 ozone SIP for the South Coast.

(266) New and amended regulations for the following APCDs were submitted on September 29, 1998 by the Governor's designee.

(i) *Incorporation by reference.* (A) South Coast Air Quality Management District.

(*1*) Rule 1168, adopted on April 7, 1989, and amended February 13, 1998.

(*2*) Rule 431.1, adopted on November 4, 1997 and amended on June 12, 1998.

(B) San Joaquin Valley Unified Air Pollution Control District.

(*1*) Rule 4653, adopted on March 19, 1998.

(*2*) Rule 4354, adopted on April 16, 1998.

(*3*) Rule 2201 adopted on August 20, 1998.

(*4*) Rule 4642, adopted on April 16, 1998.

(267) New plan for Owens Valley PM–10 Planning Area for the following agency was submitted on December 10, 1998 by the Governor's designee.

(i) *Incorporation by reference.* (A) Great Basin Unified APCD.

(1) Owens Valley PM–10 Planning Area Demonstration of Attainment State Implementation Plan, Section 7–4, Commitment to adopt 2003 SIP Revision and Section 8–2, the Board Order adopted on November 16, 1998 with Exhibit 1.

(268) New and amended regulations for the following agencies were submitted on July 23, 1999, by the Governor's designee.

(i) *Incorporation by reference.* (A) South Coast Air Quality Management District.

(*1*) Rule 2005 adopted on April 9, 1999.

(*2*) Rule 218, ''Continuous Emission Monitoring,'' amended on May 14, 1999.

(*3*) Rule 218.1, ''Continuous Emission Monitoring Performance Specification,'' adopted on May 14, 1999.

(B) Mojave Desert Air Quality Management District.

(*1*) Rule 1116 revised on April 26, 1999.

(C) Lake County Air Quality Management District.

(*1*) Section (Rule) 226.5, adopted on September 13, 1988.

(269) New and amended regulations for the following APCDs were submitted on September 7, 1999, by the Governor's designee.

(i) *Incorporation by reference.* (A) Kern County Air Pollution Control District.

(*1*) Rule 102, adopted on April 18, 1972 and amended on July 1, 1999.

(B) San Diego County Air Pollution Control District.

(*1*) Rule 2, adopted on June 30, 1999.

(C) San Joaquin Valley Unified Air Pollution Control District.

(*1*) Rule 1020, adopted on June 18, 1992 and amended on June 17, 1999.

(*2*) Rule 4452 adopted on December 17, 1992.

(D) South Coast Air Quality Management District.

(*1*) Rule 102, adopted on February 4, 1997 and amended on April 9, 1999.

(270) New and amended regulations for the following APCDs were submitted on October 29, 1999, by the Governor's designee.

(i) *Incorporation by reference.* (A) Ventura County Air Pollution Control District.

(*1*) Rule 37 adopted September 14, 1999.

(*2*) Previously approved on December 13, 1999 in paragraph (c)(270)(i)(A)(1) of this section and now deleted without replacement, Ventura County Rule 37.

(B) Monterey Bay Unified Air Pollution Control District.

(*1*) Rule 207, amended on September 15, 1999.

(C) South Coast Air Quality Management District.

(*1*) Amended Rule 465, adopted on August 13, 1999.

(*2*) Rule 1104 adopted on April 7, 1978 and amended on August 13, 1999.

(*3*) Rule 1158, adopted on June 11, 1999.

(D) Santa Barbara County Air Pollution Control District.

(*1*) Rule 353, adopted on August 19, 1999.

(E) Antelope Valley Air Pollution Control District.

(*1*) Rule 1151 adopted on July 20, 1999.

(*2*) Rule 2220, ''Transportation Outreach Program,'' adopted on January 19, 1999.

(271) New and amended regulations for the following agencies were submitted on August 22, 1997, by the Governor's designee.

(i) *Incorporation by reference.* (A) South Coast Air Quality Management District.

(*1*) Rule 2002 adopted on February 14, 1997.

(272) New and amended plan for the following agency was submitted on February 4, 2000, by the Governor's designee.

(i) *Incorporation by reference.* (A) South Coast Air Quality Management District.

(*1*) SCAQMD commitment to adopt and implement short- and intermediate-term control measures; SCAQMD commitment to adopt and implement long-term control measures; SCAQMD commitment to achieve overall emissions reductions for the years 1999–2008; SCAQMD commitment to implement those measures that had been adopted in regulatory form between November 1994 and September 1999; rate-of-progress plan for the 1999, 2002, 2005, 2008, and 2010 milestone years; amendment to the attainment demonstration in the 1997 Air Quality Management Plan for ozone; and motor vehicle emissions budgets for purposes of transportation conformity, as contained in the 1999 Amendment to the South Coast 1997 Air Quality Management Plan.

(*2*) SCAQMD commitment to adopt and implement control measures, as contained in the 1999 Amendment to the South Coast Air Quality Management Plan, with respect to PM–10.

(273) New and amended regulations for the following APCD's were submitted on August 21, 1998, by the Governor's designee.

(i) *Incorporation by reference.* (A) San Joaquin Valley Unified Air Pollution Control District.

(*1*) Rule 4621, amended on June 18, 1998.

(*2*) Rule 4622, adopted on June 18, 1998.

(274) New and amended regulations for the following APCD were submitted on June 29, 1995, by the Governor's designee.

(i) *Incorporation by reference.* (A) Mojave Desert Air Quality Management District.

(*1*) Rule 1161, adopted on June 28, 1995.

(275) New and amended plan for the following agency was submitted on March 19, 1999, by the Governor's designee.

(i) *Incorporation by reference.* (A) Santa Barbara County Air Pollution Control District.

(*1*) Control measures 333, 352, 353, T13, T18, T21, and T22; 1999 rate-of-progress plan; and motor vehicle emissions budgets (cited on page 5–4), as contained in the Santa Barbara 1998 Clean Air Plan.

(ii) *Additional materials.* (A) Santa Barbara County Air Pollution Control District.

(*1*) Baseline and projected emissions inventories, and ozone attainment demonstration, as contained in the Santa Barbara 1998 Clean Air Plan.

(276) New and amended regulations for the following APCDs were submitted on February 23, 2000, by the Governor's designee.

(i) *Incorporation by reference.* (A) Monterey Bay Unified Air Pollution Control District.

(*1*) Rules 101 and 102, adopted on December 15, 1999.

(B) San Joaquin Valley Unified Air Pollution Control District.

(*1*) Rule 4661, adopted on December 9, 1999.

(277) New and amended regulations for the following APCDs were submitted on March 28, 2000, by the Governor's designee.

(i) *Incorporation by reference.* (A) Santa Barbara County Air Pollution Control District.

(*1*) Rule 330, adopted on June 11, 1979 and amended on January 20, 2000.

(B) Sacramento Metropolitan Air Quality Management District.

(*1*) Rule 701, adopted on May 27, 1999.

(C) Bay Area Air Quality Management District.

(*1*) Rule 8–11 adopted on January 24, 1979 and amended on November 19, 1997.

(*2*) Rule 8.20, amended on March 3, 1999.

(*3*) Rule 8–16, adopted on March 7, 1979 and amended on September 15, 1998.

(*4*) Rule 8–40 amended December 15, 1999.

(*5*) Bay Area Air Quality Management District Rule 8–52, adopted on July 7, 1999.

(*6*) Rule 8–7, adopted on November 17, 1999.

(*7*) Rule 8–5 adopted on December 15, 1999 and Rule 8–18 adopted on January 7, 1998.

(*8*) Rule 8–28, adopted on July 16, 1980 and amended on March 18, 1998.

(D) South Coast Air Quality Management District.

(1) Rule 1121 adopted on December 10, 1999.

(278) New and amended regulations for the following APCDs were submitted on January 21, 2000, by the Governor's designee.

(i) *Incorporation by reference.* (A) South Coast Air Quality Management District.

(*1*) Rule 1130 amended on October 8, 1999.

(*2*) Rule 1186, adopted on September 10, 1999.

(*3*) Previously approved on January 21, 2000 in paragraph (c)(278)(i)(A)(2) of this section and now deleted without replacement for implementation in the Antelope Valley Air Quality Management District Rule 1186.

(B) Santa Barbara County Air Pollution Control District.

(*1*) Rule 352 adopted on September 16, 1999.

(C) Ventura County Air Pollution Control District.

(*1*) Rule 74.11.1 adopted on September 14, 1999.

(*2*) Rules 57 and 68, adopted on June 14, 1977.

(279) New and amended regulations for the following APCDs were submitted on May 26, 2000, by the Governor's designee.

(i) *Incorporation by reference.* (A) Imperial County Air Pollution Control District.

(*1*) Rule 426 amended September 14, 1999

(*2*) Rules 101, 408, 409, 420, 421, 701, and 702, adopted on September 14, 1999.

(*3*) Rule 416, adopted on September 14, 1999.

(*4*) Rules 109 and 110 adopted on September 14, 1999.

(*5*) Rule 427, adopted on September 14, 1999.

(*6*) Rules 100 and 113, adopted on September 14, 1999.

(*7*) Rule 405, adopted on September 14, 1999.

(*8*) Rule 417 adopted on September 14, 1999.

(*9*) Rule 415, adopted on September 14, 1999.

(*10*) Rule 115 adopted on November 19, 1985 and amended on September 14, 1999.

(*11*) Rule 400, revised on September 14, 1999.

(*12*) Rule 201, adopted prior to October 15, 1979 and revised on September 14, 1999.

(*13*) Rule 208, adopted March 17, 1980 and revised on September 14, 1999.

(*14*) Rules 203, 205, and 206, adopted on November 19, 1985 and revised on September 14, 1999.

(*15*) Rule 204, ''Applications,'' revised on September 14, 1999.

(*16*) Previously approved on January 3, 2007 in paragraph (c)(279)(i)(A)(*14*) of this section and now deleted with replacement in paragraph (c)(442)(i)(A)(*5*) of this section, Rule 206.

(B) Monterey Bay Unified Air Pollution Control District.

(*1*) Rule 404, Monterey Bay Unified APCD, adopted on March 22, 2000.

(*2*) Rule 403, adopted on March 22, 2000.

(*3*) Rule 400, adopted July 1, 1969 and amended on March 22, 2000.

(280) New and amended regulations for the following APCDs were submitted on July 26, 2000, by the Governor's designee.

(i) *Incorporation by reference.* (A) South Coast Air Quality Management District.

(*1*) Rule 1189, adopted on January 21, 2000.

(*2*) Rule 461, adopted on April 21, 2000.

(*3*) Rule 1150.1, adopted on April 5, 1985 and amended on March 17, 2000.

(B) El Dorado County Air Pollution Control District.

(*1*) Rule 240, adopted on February 15, 2000.

(C) Yolo-Solano Air Quality Management District.

(*1*) Rule 1.1, revised on August 13, 1997.

(*2*) Rule 101, adopted on February 15, 2000.

(281) New and amended regulations for the following APCDs were submitted on May 23, 2001, by the Governor's designee.

(i) *Incorporation by reference.* (A) El Dorado County Air Pollution Control District.

(*1*) Rules 238, 244, and 245, adopted on March 27, 2001.

(*2*) Rule 229, adopted on January 23, 2001.

(B) Monterey Bay Unified Air Pollution Control District.

(*1*) Rule 213 adopted on March 21, 2001.

(282) New and amended regulations for the following APCDs were submitted on May 31, 2001, by the Governor's designee.

(i) *Incorporation by reference.* (A) South Coast Air Quality Management District.

(*1*) Rules 1631, 1632, 1633, and 2507 adopted on May 11, 2001.

(*2*) Rules 2000, 2001, 2002, 2004, 2006, 2007, 2010, 2011, 2012, 2015, and 2020 adopted on May 11, 2001; and Rules 2011–2 and 2012–2 adopted on March 16, 2001.

(B) Bay Area Air Quality Management District.

(*1*) Rule 8–51, revised on May 2, 2001.

(C) Monterey Bay Unified Air Pollution Control District

(*1*) Rule 205, ''Provision of Sampling and Testing Facilities,'' revised on March 21, 2001.

(*2*) Rule 204, ''Cancellation of Applications,'' revised on March 21, 2001.

(*3*) Rule 206, ''Standards for Issuing Authorities to Construct and Permits to Operate,'' revised on March 21, 2001.

(283) San Francisco Bay Area Ozone Attainment Plan for the 1-Hour National Ozone Standard, June 1999, was submitted on August 13, 1999 by the Governor's designee.

(i) *Incorporation by reference.* (A) Bay Area Air Quality Management District.

(*1*) Tables 10 and 12 of the San Francisco Bay Area Ozone Attainment Plan for the 1-Hour National Ozone Standard, June 1999, which detail the commitment to adopt and implement any combination of new control measures to achieve 11 ton per day reduction in VOC emissions by June 2000.

(*2*) Contingency measures, Table 18, ''Post-Attainment Year (2000–2003) Inventory Reductions Reflected in the SIP''.

(284) New and amended regulations for the following APCDs were submitted on May 8, 2001, by the Governor's designee.

(i) *Incorporation by reference.* (A) Monterey Bay Unified Air Pollution Control District.

(*1*) Rules 429 adopted on September 16, 1987 and amended on January 17, 2001 and Rule 434 adopted on June 15, 1994 and amended on January 17, 2001.

(*2*) Rules 418 and 419, adopted on December 13, 2000.

(*3*) Rule 416, adopted on September 1, 1974 and amended on January 17, 2001.

(*4*) Rule 433, adopted on January 17, 2001.

(*5*) Rule 200, ''Permits Required,'' revised on December 13, 2000.

(B) South Coast Air Quality Management District.

(*1*)Rule 1612.1 adopted on March 16, 2001.

(*2*) Rule 1146, adopted on November 17, 2000.

(*3*) Rule 442 adopted on May 7, 1976 and amended on December 15, 2000.

(*4*) Rule 1102, adopted on January 6, 1978 and amended on November 17, 2000.

(*5*) Rule 1131 adopted on September 15, 2000.

(*6*) Rule 1132, adopted on January 19, 2001.

(C) Santa Barbara County Air Pollution Control District.

(*1*) Rule 326 adopted on December 14, 1993, and amended on January 18, 2001.

(*2*) Rule 346, adopted on January 18, 2001.

(D) Ventura County Air Pollution Control District.

(*1*) Rule 74.9, adopted on July 21, 1981 and amended on November 14, 2000.

(*2*) Rule 70, adopted on November 14, 2000.

(285) New and amended regulations for the following APCDs were submitted on December 11, 2000 by Governor's designee.

(i) *Incorporation by reference.* (A) Ventura County Air Pollution Control District.

(*1*) Rule 74.15.1, adopted on June 13, 2000.

(B) San Joaquin Valley Unified Air Pollution Control District.

(*1*) Rule 4603 adopted on April 11, 1991 and amended on September 21, 2000.

(C) Bay Area Air Quality Management District.

(*1*) Rule 9–11, adopted on May 17, 2000.

(*2*) Regulation 8, Rule 34, adopted on October 6, 1999.

(D) Antelope Valley Air Pollution Control District.

(*1*) Rule 701, adopted on July 18, 2000.

(E) San Diego County Air Pollution Control District.

(*1*) Rule 61.2, amended on July 26, 2000.

(286) New and amended regulations for the following APCDs were submitted on March 14, 2001 by Governor's designee.

(i) *Incorporation by reference.* (A) South Coast AQMD.

(*1*) Rule 109 amended on August 18, 2000, Rule 481 amended on November 17, 2000, Rule 1107 amended on November 17, 2000, Rule 1141.1 amended on November 17, 2000, Rule 1141.2 amended on November 17, 2000, and Rule 1162 amended on November 17, 2000.

(*2*) Rule 1168, amended on September 15, 2000.

(*3*) Rule 1141 adopted on July 8, 1983, and amended on November 17, 2000.

(287) New and amended regulations for the following APCD were submitted on November 8, 2001 by the Governor's designee.

(i) *Incorporation by reference.* (A) Mojave Desert Air Quality Management District.

(1) Rule 1161 adopted on October 22, 2001.

(288) New and amended regulations for the following APCDs were submitted on October 30, 2001, by the Governor's designee.

(i) *Incorporation by reference.* (A) San Joaquin Valley Unified Air Pollution Control District.

(*1*) Rules 4103 and 4106, adopted on June 21, 2001.

(B) Lake County Air Quality Management District.

(*1*) Sections [Rules] 203, 204.5, 208.3, 208.8, 226.4, 226.5, 240.8, 246, 248.3, 248.5, 249.5, 251.7, 270, 431, 431.5, 433, 434, 1000, 1001, 1003, 1105, 1107, 1130, 1140, 1145, 1150, 1160, and 1170, adopted on June 19, 2001.

(C) Ventura County Air Pollution Control District.

(*1*) Rule 74.19 adopted on August 11, 1992 and amended on April 10, 2001.

(D) Imperial County Air Pollution Control District.

(*1*) Rules 412 and 413 adopted on January 16, 2001.

(*2*) Rule 403, adopted on November 19, 1985 and revised on July 24, 2001.

(E) South Coast Air Quality Management District.

(*1*) Rule 2005 adopted on April 20, 2001.

(289) New and amended regulation for the following AQMD were submitted on November 28, 2001, by the Governor's designee.

(i) *Incorporation by reference.* (A) Yolo-Solano Air Quality Management District.

(1) Rule 2.32 adopted on October 10, 2001.

(290) New and amended regulations for the following APCDs were submitted on December 14, 2001, by the Governor's designee.

(i) *Incorporation by reference.* (A) Kern County Air Pollution Control District.

(*1*) Rule 427, adopted on November 1, 2001.

(291) [Reserved]

(292) New and amended regulations for the following APCDs were submitted on November 7, 2001, by the Governor's designee.

(i) *Incorporation by reference.* (A) Monterey Bay Air Pollution Control District.

(*1*) Rule 431, adopted on October 17, 2001.

(B) Santa Barbara County Air Pollution Control District.

(*1*) Rule 325 adopted on January 25, 1994, and amended on July 19, 2001.

(293) New and amended regulations for the following APCDs were submitted on January 22, 2002, by the Governor's designee.

(i) *Incorporation by reference.* (A) South Coast Air Quality Management District.

(*1*) Rules 208 and 444, adopted on December 21, 2001.

(*2*) Rule 1124 adopted on July 6, 1979, and amended on September 21, 2001.

(*3*) Rule 1634, adopted on November 9, 2001.

(B) Yolo-Solano Air Quality Management District.

(*1*) Rule 2.14, adopted on November 14, 2001.

(294) New and amended regulations for the following APCD were submitted on February 20, 2002, by the Governor's designee.

(i) *Incorporation by reference.* (A) San Joaquin Valley Unified Air Pollution Control District.

(*1*) Rule 4653, amended on December 20, 2001.

(*2*) Rule 4603 adopted on April 11, 1991, and amended on December 20, 2001.

(*3*) Rule 4602 adopted on April 11, 1991 and amended on December 20, 2001; Rule 4604 adopted on April 11, 1991 and amended on December 20, 2001; Rule 4606 adopted on December 19, 1991 and amended on December 20, 2001; Rule 4607 adopted on April 11, 1991 and amended on December 20, 2001; and, Rule 4684 adopted on May 19, 1994 and amended on December 20, 2001.

(*4*) Rule 4661, adopted on May 21, 1992 and amended on December 20, 2001, Rule 4662, adopted April 11, 1991 and amended on December 20, 2001, and Rule 4663, adopted on December 20, 2001.

(*5*) Rule 4605 adopted on December 19, 1991 and amended on December 20, 2001.

(295) New and amended regulations for the following APCD were submitted on February 8, 2002, by the Governor's designee.

(i) *Incorporation by reference.* (A) Tehama County Air Pollution Control District.

(*1*) Rules 4:31 and 4:37 adopted on January 29, 2002.

(296) New and amended regulations for the following APCD were submitted on November 9, 2001, by the Governor's designee.

(i) *Incorporation by reference.* (A) El Dorado County Air Pollution Control District.

(*1*) Rule 244 adopted on March 27, 2001, and amended on September 25, 2001.

(*2*) Rule 232, adopted on October 18, 1994 and amended on September 25, 2001.

(297) New and amended regulations for the following APCDs were submitted on March 15, 2002, by the Governor's designee.

(i) *Incorporation by reference.* (A) Ventura County Air Pollution Control District.

(*1*) Rule 74.6, adopted on January 8, 2002.

(*2*) Rule 74.29 adopted on October 10, 1995, and amended on January 8, 2002.

(*3*) Rule 74.24.1 adopted on November 10, 1998, and amended on January 8, 2002.

(*4*) Rule 74.23, adopted on January 8, 2002.

(*5*) Rule 74.2, adopted on November 13, 2001.

(B) Imperial County Air Pollution Control District.

(*1*) Rule 101, adopted on July 28, 1981 and amended on December 11, 2001.

(C) South Coast Air Quality Management District.

(*1*) Rule 1107 adopted on June 1, 1979, and amended on November 9, 2001.

(*2*) Rule 518.2 adopted on January 12, 1996, amended on December 21, 2001.

(D) Monterey Bay Unified Air Pollution Control District.

(*1*) Rule 427, adopted on January 16, 1980 and amended on December 19, 2001.

(*2*) Rule 417 adopted on September 1, 1974, and amended on December 19, 2001.

(E) San Joaquin Valley Unified Air Pollution Control District.

(*1*) Rule 4601, adopted on October 31, 2001.

(*2*) Rule 4623, adopted on April 11, 1991 and amended on December 20, 2001.

(F) Santa Barbara County Air Pollution Control District.

(*1*) Rule 323, adopted on November 15, 2001.

(298) New and amended contingency measures for the following APCDs were submitted on May 29, 2002, by the Governor's designee.

(i) *Incorporation by reference.* (A) Santa Barbara County Air Pollution Control District.

(*1*) 2001 Clean Air Plan Contingency Control Measures R–SC–1 (Architectural Coatings); N–IC–1 and N–IC–3 (Control of Emissions from Reciprocating Internal Combustion Engines); N–XC–2 (Large Water Heaters and Small Boilers, Steam Generators, and Process Heaters); R–SL–2 (Solvent Degreasers) [incorrectly identified as CAP Control Measure R–SL–1 in Table 4–3, ''Proposed APCD Control Measures'']; R–SL–2 (Solvent Cleaning Operations); N–IC–2 (Gas Turbines); R–SL–4 (Electronic Industry—Semiconductor Manufacturing); N–XC–4 (Small Industrial and Commercial Boilers, Steam Generators, and Process Heaters), adopted on November 15, 2001.

(299) Amended regulation for the following APCD was submitted on July 2, 2002, by the Governor's designee.

(i) *Incorporation by reference.* (A) El Dorado County Air Pollution Control District.

(*1*) Rule 233, adopted on October 18, 1994, and amended on June 11, 2002.

(300) Amended regulations for the following APCDs were submitted on June 18, 2002, by the Governor's designee.

(i) *Incorporation by reference.* (A) Mojave Desert Air Quality Management District.

(*1*) Rule 1161 amended on March 25, 2002.

(B) Bay Area Air Quality Management District.

(*1*) Rule 8–3, adopted on November 21, 2001.

(C) Monterey Bay Unified Air Pollution Control District.

(*1*) Rule 426, adopted on April 17, 2002.

(D) San Joaquin Valley Unified Air Pollution Control District.

(*1*) Rule 4703 adopted on April 25, 2002.

(301) Amended regulation for the following APCD was submitted on March 5, 2002, by the Governor's designee.

(i) *Incorporation by reference.* (A) San Joaquin Valley Unified Air Pollution Control District.

(*1*) Rule 4354, adopted September 14, 1994 and amended February 21, 2002.

(302) New and amended regulations for the following APCDs were submitted on October 16, 2002, by the Governor's designee.

(i) *Incorporation by reference.* (A) Imperial County Air Pollution Control District.

(*1*) Rule 701, revised on August 13, 2002.

(*2*) Rule 101, adopted on August 13, 2002.

(*3*) Rule 420 adopted on November 11, 1985, and amended on August 13, 2002.

(B) Monterey Bay Unified Air Pollution Control District.

(*1*) Rule 408, adopted on September 1, 1974 and revised on August 21, 2002.

(*2*) Rule 415, adopted on August 21, 2002.

(*3*) Rule 414, adopted on August 21, 2002.

(*4*) Rules 412 and 413, adopted on September 1, 1974 and revised on August 21, 2002.

(303) New and amended regulations for the following APCDs were submitted on August 6, 2002, by the Governor's designee.

(i) *Incorporation by reference.* (A) Santa Barbara County Air Pollution Control District.

(*1*) Rule 401, adopted on October 18, 1971 and revised on May 16, 2002.

(B) Yolo Solano Air Quality Management District.

(*1*) Rule 2.22, revised on June 12, 2002.

(*2*) Rule 2.21, adopted on March 23, 1994 and amended on June 12, 2002.

(*3*) Previously approved on January 23, 2003, in paragraph (c)(303)(i)(B)(*1*) of this section and now deleted with replacement in paragraph (c)(463)(i)(B)(*2*) of this section, Rule 2.22, ''Gasoline Dispensing Facilities,'' revised on June 12, 2002.

(C) San Joaquin Valley Unified Air Pollution Control District.

(*1*) Rule 4311 adopted on June 20, 2002.

(*2*) Rule 4661, adopted on May 16, 2002.

(*3*) Rule 4693, adopted on May 16, 2002.

(*4*) Rule 3170, ''Federally Mandated Ozone Nonattainment Fee,'' adopted on May 16, 2002.(304) New and amended regulations for the following APCD were submitted on December 6, 2001, by the Governor's designee.

(i) *Incorporation by reference.* (A) San Joaquin Valley Unified Air Pollution Control District.

(*1*) Rules 8011, 8021, 8031, 8041, 8051, 8061, 8071, and 8081, adopted on November 15, 2001.

(305) Amended regulations for the following APCD were submitted on May 20, 2002 by the Governor's designee.

(i) *Incorporation by reference.* (A) Ventura County Air Pollution Control District.

(1) Rules 10, 26.1, 26.2, 26.3, 26.4, 26.6, and 26.11 adopted on May 14, 2002.

(306) The following plan was submitted on December 5, 2002, by the Governor's designee.

(i) *Incorporation by reference.* (A) Kern County Air Pollution Control District.

(*1*) PM–10 (Respirable Dust) Attainment Demonstration, Maintenance Plan, and Redesignation Request (excluding pages 4–1, 4–2, 6–1, 6–2, Appendix A, and pages D–12 through D–37 of Appendix D) adopted on September 5, 2002.

(B) California Air Resources Board, California.

(*1*) California Air Resources Board Executive Order G–125–295 adopted on December 4, 2002.

(307) New and amended regulations for the following APCDs were submitted on November 19, 2002, by the Governor's designee.

(i) *Incorporation by reference.* (A) Sacramento Metropolitan Air Quality Management District.

(*1*) Rule 449, adopted on February 5, 1975 and amended on September 26, 2002.

(B) San Joaquin Valley Unified Air Pollution Control District.

(*1*) Rule 4622, adopted on May 21, 1992 and amended on September 19, 2002.

(C) San Diego County Air Pollution Control District.

(*1*) Rule 101, adopted on September 25, 2002.

(*2*) Rule 67.11.1, adopted on September 25, 2002.

(*3*) Rule 67.11, ''Wood Products Coating Operations,'' adopted on June 27, 2012 and effective on June 27, 2013.

(D) South Coast Air Quality Management District.

(*1*) Rule 1137 adopted on February 1, 2002.

(308) New and amended regulations for the following APCDs were submitted on December 12, 2002, by the Governor's designee.

(i) *Incorporation by reference.* (A) Bay Area Air Quality Management District.

(*1*) Rule 8–7, amended on November 6, 2002.

(B) Lake County Air Quality Management District.

(*1*) Sections 226.5, 232.1, 238.5, 249.3, 250.5, 433.5, 436, and 436.5, adopted on October 1, 2002 and Sections 431.5, 431.7, 432.5, and 433, amended on October 1, 2002.

(C) Sacramento Metropolitan Air Quality Management District.

(*1*) Rule 307, adopted on September 26, 2002.

(D) South Coast Air Quality Management District.

(*1*) Rule 1631, amended on October 4, 2002.

(E) Monterey Bay Unified Air Pollution Control District.

(1) Rule 203, ''Application,'' revised October 16, 2002.

(2) Rule 212, ''Public Availability of Emission Data,'' revised on October 16, 2002.

(309) New and amended plan for the following agency was submitted on November 18, 2002, by the Governor's designee.

(i) *Incorporation by reference.* (A) South Coast Air Quality Management District (SCAQMD).

(*1*) SCAQMD commitment to adopt and implement control measures, and reasonable further progress, as contained in the Implementation Status of the PM–10 Portion of the 1997 AQMP and PM–10 Emissions Budgets for Transportation Conformity use (2002 status report) adopted by SCAQMD on June 7, 2002.

(*2*) Baseline and projected emissions inventories, SCAQMD commitment to adopt and implement control measures, reasonable further progress, contingency measures, attainment demonstration, PM–10 attainment date extension, and motor vehicle emissions budgets, as contained in Chapters 3, 4, 5, 6 and 8 of the 2002 Coachella Valley PM–10 SIP adopted by SCAQMD on June 21, 2002, and the 2002 Coachella Valley PM–10 SIP Addendum (Appendix E) adopted by SCAQMD on September 13, 2002.

(310) New and amended rules for the following districts were submitted on May 21, 2002, by the Governor's designee.

(i) *Incorporation by reference.* (A) San Joaquin Valley Unified Air Pollution Control District.

(*1*) Rule 4692, adopted on March 21, 2002.

(B) South Coast Air Quality Management District.

(*1*) Rule 1178 adopted on December 21, 2001; Rule 481 adopted on October 7, 1977 and amended on January 11, 2002; and, Rule 1141.2 adopted on July 6, 1984 and amended on January 11, 2002.

(311) New and amended rules for the following districts were submitted on December 23, 2002, by the Governor's designee.

(i) *Incorporation by reference.* (A) South Coast Air Quality Management District.

(*1*) Rule 1171, adopted on August 2, 1991 and amended on August 2, 2002.

(*2*) Previously approved on June 3, 2003 in paragraph (c)(311)(i)(A)(1) of this section and now deleted without replacement, Subsection (c)(1) (July 1, 2005 VOC limits) of Rule 1171.

(*3*) Rule 1309.1, adopted on May 3, 2002.

(B) San Joaquin Valley Unified Air Pollution Control District.

(*1*) Rules 2020 and 2201 adopted on December 19, 2002.

(312) New and amended rules for the following districts were submitted on January 21, 2003, by the Governor's designee.

(i) *Incorporation by reference.* (A) Bay Area Air Quality Management District.

(*1*) Rules 8.5 and 8.18, amended on November 27, 2002, and adopted on January 1, 1978 and October 1, 1980, respectively.

(B) Santa Barbara County Air Pollution Control District.

(*1*) Rule 360, adopted on October 17, 2002.

(313) New and amended plan for the following agency was submitted on December 20, 2002, by the Governor's designee.

(i) *Incorporation by reference.* (A) San Diego County Air Pollution Control District.

(*1*) Ozone Redesignation Request and Maintenance Plan for San Diego County, including motor vehicle emissions budgets for 2010 and 2014, Resolution #02–389, adopted on December 11, 2002.

(314) New and amended plan for the following agency was submitted on February 21, 2003, by the Governor's designee.

(i) *Incorporation by reference.* (A) Santa Barbara County Air Pollution Control District.

(*1*) Emission Inventories, 1-hour ozone maintenance demonstration, commitments to continue ambient monitoring and to track progress, and contingency measures, as contained in the Final 2001 Clean Air Plan adopted on December 19, 2002.

(315) New and amended regulations for the following APCDs were submitted on April 1, 2003, by the Governor's designee.

(i) *Incorporation by reference.* (A) Bay Area Air Quality Management District.

(*1*) Rule 8–4, amended on October 16, 2002 and Rule 8–16, adopted on March 7, 1979 and amended on October 16, 2002.

(*2*) Rule 8–31 adopted on September 7, 1983 and amended on October 16, 2002; and Rule 8–43 adopted on November 23, 1988 and amended on October 16, 2002.

(*3*) Rule 8–14, adopted on March 7, 1979 and amended on October 16, 2002; and Rule 8–19, adopted on January 9, 1980 and amended on October 16, 2002.

(B) San Joaquin Valley Unified Air Pollution Control District.

(*1*) Rule 4408, adopted on December 19, 2002.

(*2*) Rule 4610, adopted on December 19, 2002.

(C) Mojave Desert Air Quality Management District.

(*1*) Rule 1113, adopted on February 24, 2003.

(316) New and amended regulations for the following APCDs were submitted on June 5, 2003, by the Governor's designee.

(i) *Incorporation by reference.* (A) Kern County Air Pollution Control District.

(*1*) Rule 417, originally adopted on April 18, 1972, amended on March 13, 2003.

(B) San Joaquin Valley Unified Air Pollution Control District.

(*1*) Rule 4313, adopted on March 27, 2003.

(C) San Diego County Air Pollution Control District.

(*1*) Rule 67.3 adopted on May 9, 1979 and amended on April 9, 2003.

(D) South Coast Air Quality Management District.

(*1*) Rule 1133 adopted on January 10, 2003; Rule 1133.1 adopted on January 10, 2003; and, Rule 1133.2 adopted on January 10, 2003.

(E) Yolo-Solano Air Quality Management District.

(*1*) Rule 2.33, revised on March 12, 2003.

(F) Antelope Valley Air Quality Management District.

(*1*) Rule 1113, adopted on March 18, 2003.

(317) The plan and amended regulation for the following APCD were submitted on August 19, 2003, by the Governor's designee.

(i) *Incorporation by reference.* (A) San Joaquin Valley Unified Air Pollution Control District.

(*1*) Rule 4901, adopted on July 15, 1993 and amended on July 17, 2003.

(*2*) 2003 PM10 Plan, San Joaquin Valley Plan to Attain Federal Standards for Particulate Matter 10 Microns and Smaller (all except ''Contingency Control Measures'' section, pages 4–53 to 4–55), adopted on June 19, 2003, and ''Regional Transportation Planning Agency Commitments for Implementation,'' dated April 2003 (Volume 3).

(B) [Reserved]

(318) Amended regulation for the following APCD was submitted on September 19, 2003, by the Governor's designee.

(i) *Incorporation by reference.* (A) Ventura County Air Pollution Control District.

(*1*) Rule 74.20, adopted on September 9, 2003.

(319) Amended regulation for the following APCD was submitted on November 14, 2003, by the Governor's designee.

(i) *Incorporation by reference.* (A) South Coast Air Quality Management District.

(*1*) Rule 1168, amended on October 3, 2003.

(320) New and amended regulations for the following APCDs were submitted on August 11, 2003, by the Governor's designee.

(i) *Incorporation by reference.* (A) Monterey Bay Unified Air Pollution Control District.

(*1*) Rule 438, adopted on April 16, 2003.

(*2*) Rule 1002, adopted on February 22, 1989 and revised on April 16, 2003.

(*3*) Rule 418, adopted on September 1, 1974 and revised on April 16, 2003.

(*4*) Rule 101, adopted on April 16, 2003.

(B) South Coast Air Quality Management District.

(*1*) Rule 109 adopted on May 5, 1989 and amended on May 2, 2003; and, Rule 1131 adopted on September 15, 2000 and amended on June 6, 2003.

(C) Santa Barbara County Air Pollution Control District.

(*1*) Rule 102, adopted on June 19, 2003.

(321) New and amended regulations for the following APCDs were submitted on November 4, 2003, by the Governor's designee.

(i) *Incorporation by reference.* (B) San Joaquin Valley Unified Air Pollution Control District.

(*1*) Rule 4902, adopted on June 17, 1993.

(C) Great Basin Air Pollution Control District.

(*1*) Rule 101, adopted on September 24, 2003.

(*2*) Rule 406, adopted on January 21, 1976 and revised on September 24, 2003.

(*3*) Rule 407, adopted on September 5, 1974 and revised on September 24, 2003.

(D) San Diego County Air Pollution Control District.

(*1*) Rule 69.4, adopted on September 27, 1994 and amended on July 30, 2003.

(322) New and amended plan for the following agency was submitted on December 9, 2003, by the Governor's designee.

(i) *Incorporation by reference.* (A) Kern County Air Pollution Control District.

(*1*) East Kern County Ozone Attainment Demonstration, Maintenance Plan and Redesignation Request, adopted on May 1, 2003: Chapter 5— ''Regional Forecast,'' including emissions inventory summary (Table 5–1) and motor vehicle emissions budgets (Table 5–2); Chapter 6— ''Emission Control Measures,'' including contingency measures (Table 6–1); and Appendix B— ''Emission Inventories.''

(323) The following plan was submitted on November 30, 2001 by the Governor's designee.

(i) *Incorporation by reference.* (A) Bay Area Air Quality Management District

(*1*) San Francisco Bay Area Ozone Attainment Plan for the 1-hour National Ozone Standard (Section 3: Emission Inventory; Section 5: Control Strategy, except subsection ''Demonstrating Reasonable Further Progress'' Appendix B: Control Measure Descriptions; Appendix C: Reasonably Available Control Measure Analysis; Appendix E: Further Study Measure Descriptions;) adopted on October 24, 2001.

(324) Amended regulation for the following AQMD was submitted on April 1, 2004, by the Governor's designee.

(i) *Incorporation by reference.* (A) South Coast Air Quality Management District.

(*1*) Rule 1132, adopted on January 19, 2001 and amended on March 5, 2004.

(325) Amended regulations for the following APCD were submitted on September 29, 2003, by the Governor's Designee.

(i) *Incorporation by reference.* (A) San Joaquin Valley Unified Air Pollution Control District.

(*1*) Rules 4305 and 4351 adopted on August 21, 2003, and Rule 4306 adopted on September 18, 2003.

(326) Amended regulations for the following APCD were submitted on October 9, 2003, by the Governor's Designee.

(i) *Incorporation by reference.* (A) San Joaquin Valley Unified Air Pollution Control District.

(*1*) Rules 4701 and 4702 adopted on August 21, 2003.

(327) The following plan was submitted on December 30, 2003 by the Governor's designee.

(i) *Incorporation by reference.* (A) San Joaquin Valley Unified Air Pollution Control District.

(*1*) Amendments to the 2003 San Joaquin Valley Plan to Attain Federal Standards for Particulate Matter 10 Microns and Smaller, adopted December 18, 2003.

(328) Amended regulations for the following APCDs were submitted on January 15, 2004, by the Governor's Designee.

(i) *Incorporation by reference.* (A) Ventura County Air Pollution Control District

(*1*) Rule 70, adopted on June 25, 1974 and revised on November 11, 2003.

(*2*) Rule 56, adopted on October 22, 1968 and amended on November 11, 2003.

(B) South Coast Air Quality Management District.

(*1*) Rule 1171, adopted on November 7, 2003.

(2) Previously approved on July 27, 2004 in paragraph (c)(328)(i)(B)(1) of this section and now deleted without replacement, Subsection (c)(1) (July 1, 2005 VOC limits) of Rule 1171.

(C) Monterey Bay Unified Air Pollution Control District.

(*1*) Rule 400, adopted on July 1, 1969, and amended on October 15, 2003.

(329) Amended regulations for the following APCDs were submitted on February 20, 2004, by the Governor's Designee.

(i) *Incorporation by reference.* (A) South Coast Air Quality Management District.

(*1*) Rules 2007, 2011 including protocol for Rule 2011, and 2012 including protocol for Rule 2012 amended on December 5, 2003.

(330) The following plan was submitted on April 10, 2003 by the Governor's designee.

(i) *Incorporation by reference.* (A) San Joaquin Valley Unified Air Pollution Control District.

(*1*) Amended 2002 and 2005 Ozone Rate of Progress Plan for San Joaquin Valley, adopted on December 19, 2002.

(*i*) Appendix E, ''Regional Transportation Planning Agency Commitments for Implementation.''

(331) New and amended regulations for the following APCDs were submitted on June 3, 2004, by the Governor's designee.

(i) *Incorporation by reference.* (A) San Joaquin Valley Unified Air Pollution Control District.

(*1*) Rule 4610 amended on April 17, 2003.

(*2*) Rule 4604, adopted on April 11, 1991, and amended on January 15, 2004.

(B) South Coast Air Quality Management District.

(*1*) Rule 461, originally adopted on January 9, 1976 and amended on January 9, 2004.

(*2*) Rule 1105.1, adopted on November 7, 2003.

(332) Amended regulations for the following APCDs were submitted on July 19, 2004, by the Governor's designee.

(i) *Incorporation by reference.* (A) Imperial County Air Pollution Control District.

(*1*) Rule 403, adopted on November 19, 1985 and revised on May 18, 2004 and Rule 405, adopted prior to November 4, 1977 and revised on May 18, 2004.

(*2*) Rule 415, originally adopted on November 4, 1977 and revised on May 18, 2004.

(*3*) Rule 425, adopted on August 5, 1989, and amended on May 18, 2004.

(*4*) Rule 414, Storage of Reactive Organic Compound Liquids, adopted on December 11, 1979, and revised on May 18, 2004.

(B) Ventura County Air Pollution Control District.

(*1*) Rule 2, adopted on October 22, 1968, and amended on April 13, 2004.

(*2*) Rules 50, 52, and 53, adopted on July 2, 1968 and revised on April 13, 2004.

(*3*) Rules 68 and 102, adopted on May 23, 1972 and revised on April 13, 2004.

(*4*) Rule 5, ''Effective Date,'' amended on April 13, 2004.

(333) New and amended regulations for the following AQMD were submitted on July 29, 2004, by the Governor's designee.

(i) *Incorporation by reference.* (A) South Coast Air Quality Management District.

(*1*) Rule 2015 adopted on October 15, 1993 and amended on June 4, 2004.

(*2*) Amended Rules 403 (except for subdivision h), 403.1 (except for subdivision j), and 1186, as adopted on April 2, 2004.

(334) New and amended regulations for the following APCDs were submitted on September 23, 2004, by the Governor's designee.

(i) *Incorporation by reference.* (A) Kern County Air Pollution Control District.

(*1*) Rule 416.1, adopted on July 8, 2004.

(B) San Joaquin Valley Unified Air Pollution Control District.

(*1*) Rule 4550 and the List of Conservation Management Practices, adopted on May 20, 2004, re-adopted on August 19, 2004.

(*2*) Rules 8011, 8021, 8031, 8041, 8051, and 8061, amended on August 19, 2004 and Rules 8071 and 8081, amended on September 16, 2004.

(335) New and amended regulations for the following APCDs were submitted on January 13, 2005, by the Governor's designee.

(i) *Incorporation by reference.* (A) Monterey Bay Unified Air Pollution Control District.

(*1*) Rule 408, adopted on September 1, 1974 and revised on September 15, 2004.

(*2*) Rule 438, adopted on April 16, 2003 and revised on September 15, 2004.

(*3*) Rule 404, adopted on December 15, 2004.

(B) San Joaquin Valley Unified Air Pollution Control District.

(*1*) Rule 4103, adopted on June 18, 1992 and amended on September 16, 2004.

(C) Ventura County Air Pollution Control District.

(*1*) Rule 74.25, adopted on October 12, 2004.

(D) South Coast Air Quality Management District.

(*1*) Rule 1122, adopted on October 1, 2004.

(E) Kern County Air Pollution Control District

(*1*) Rule 402, ''Fugitive Dust'', adopted on November 29, 1993 and amended on November 3, 2004.

(336) New and amended regulations for the following APCDs were submitted on April 26, 2005, by the Governor's designee.

(i) *Incorporation by reference.* (A) San Joaquin Valley Unified Air Pollution Control District.

(*1*) Rule 4101, adopted on May 21, 1992, and amended on February 17, 2005.

(B) Ventura County Air Pollution Control District.

(*1*) Rules 74.6, 74.6.1, 74.12, 74.13, 74.19, 74.19.1, 74.24, and 74.30, adopted on November 11, 2003.

(C) Imperial County Air Pollution Control District.

(*1*) Rule 101, adopted on January 11, 2005.

(*2*) Rule 424, adopted on November 9, 1982 and revised on January 11, 2005.

(D) Santa Barbara County Air Pollution Control District.

(*1*) Rule 102, adopted on January 20, 2005.

(337) New and amended regulations for the following APCDs were submitted on July 15, 2005, by the Governor's designee.

(i) *Incorporation by reference.* (A) San Joaquin Valley Unified Air Pollution Control District.

(*1*) Rule 4623, adopted on April 11, 1991 and amended on May 19, 2005.

(*2*) Rule 4403, adopted on April 11, 1991 and revised on April 20, 2005; Rule 4409 adopted on April 20, 2005; Rule 4451 adopted on April 11, 1991 and revised on April 20, 2005; Rule 4452 adopted on April 11, 1991 and revised on April 20, 2005; and, Rule 4455 adopted on April 20, 2005.

(*3*) Rule 4204, adopted on February 17, 2005.

(B) Ventura County Air Pollution Control District.

(*1*) Rule 74.14, adopted on November 24, 1987 and revised on April 12, 2005.

(*2*) Rule 57, adopted on July 2, 1968 and revised on January 11, 2005 and Rule 57.1, adopted on January 11, 2005.

(*3*) Rule 74.20, Adhesives and Sealants, adopted on June 8, 1993, and revised on January 11, 2005.

(C) South Coast Air Quality Management District.

(*1*) Rules 2010, 2011, 2011 Protocol Appendix A Chapters 2–6 and Attachments A-F, 2012, and 2012 Protocol Appendix A Chapters 2–8 and Attachments A–G adopted on January 7, 2005.

(*2*) Previously approved on August 29, 2006, in paragraph (c)(337)(i)(C)(*1*) of this section and now deleted with replacement in (c)(491)(i)(A)(*4*), Rule 2011: Attachment C, ''Requirements for Monitoring, Reporting, and Recordkeeping for SO_X Emissions: Quality Assurance and Quality Control Procedures,'' amended on December 4, 2015.

(*3*) Previously approved on August 29, 2006, in paragraph (c)(337)(i)(C)(*1*) of this section and now deleted with replacement in (c)(491)(i)(A)(*5*), Rule 2011: Chapter 3, ''Requirements for Monitoring, Reporting, and Recordkeeping for SO_X Emissions: Process Units—Periodic Reporting and Rule 219 Equipment,'' amended on December 4, 2015.

(*4*) Previously approved on August 29, 2006, in paragraph (c)(337)(i)(C)(*1*) of this section and now deleted with replacement in (c)(491)(i)(A)(*6*), Rule 2012: Attachment C, ''Requirements for Monitoring, Reporting, and Recordkeeping for NO_X Emissions: Quality Assurance and Quality Control Procedures,'' amended on December 4, 2015.

(*5*) Previously approved on August 29, 2006, in paragraph (c)(337)(i)(C)(*1*) of this section and now deleted with replacement in (c)(491)(i)(A)(*7*), Rule 2012: Chapter 4, ''Requirements for Monitoring, Reporting, and Recordkeeping for NO_X Emissions: Process Units—Periodic Reporting and Rule 219 Equipment,'' amended on December 4, 2015.

(*6*) Previously approved on August 29, 2006, in paragraph (c)(337)(i)(C)(*1*) of this section and now deleted with replacement in (c)(491)(i)(A)(*8*), Rule 2011: Attachment E, ''Requirements for Monitoring, Reporting, and Recordkeeping for SO_X Emissions: Definitions,'' amended on February 5, 2016.

(*7*) Previously approved on August 29, 2006, in paragraph (c)(337)(i)(C)(*1*) of this section and now deleted with replacement in (c)(491)(i)(A)(*9*), Rule 2012: Attachment F, ''Requirements for

Monitoring, Reporting, and Recordkeeping for NO_X Emissions: Definitions,'' amended on February 5, 2016.

(D) Monterey Bay Unified Air Pollution Control District.

(*1*) Rule 403, adopted on September 1, 1974 and revised on February 16, 2005.

(338) New and amended regulations for the following agency were submitted on March 13, 2002, by the Governor's designee.

(i) *Incorporation by reference.* (A) California Air Resources Board.

(*1*) California Code of Regulations, Title 17, Division 3, Chapter 1, Subchapter 8.5, Consumer Products, Article 3, Aerosol Coating Products, Sections 94520 to 94528, and Subchapter 8.6, Maximum Incremental Reactivity, Article 1, Tables of Maximum Incremental Reactivity (MIR) Values, Sections 94700 to 94701, both adopted on May 1, 2001.

(339) New and amended plans were submitted on January 9, 2004, by the Governor's designee.

(i) *Incorporation by reference.* (A) South Coast Air Quality Management District (SCAQMD).

(*1*) South Coast 2003 Air Quality Management Plan (AQMP), as adopted by SCAQMD on August 1, 2003, and by California Air Resources Board on October 23, 2003.

(*i*) Baseline and projected emissions inventories in AQMP Chapter III Tables 3–1A and 3–3A, in Appendix III Tables A–1, A–2, A–3, A–5, and A–7, and in Appendix V Attachment 4; SCAQMD commitment to adopt and implement control measures CMB–07, CMB–09, WST–01, WST–02, PRC–03, BCM–07, BCM–08, MSC–04, MSC–06, TCB–01 in AQMP Chapter 4 Table 4–8A, and in Appendix IV–A); PM–10 reasonable further progress in AQMP Chapter 6, Table 6–1 and in Appendix V Chapter 2; contingency measures CTY–01, CTY–14, TCB–01 in Appendix IV–A Section 2; PM–10 attainment demonstration in AQMP Chapter 5, and in Appendix V Chapter 2; and motor vehicle emissions budgets in ''2003 South Coast AQMP On-Road Motor Vehicle Emissions Budgets.''

(*2*) 2003 Coachella Valley PM–10 State Implementation Plan, as adopted by SCAQMD on August 1, 2003, and by California Air Resources Board on October 23, 2003.

(*i*) Baseline and projected emissions inventories in Tables 2–2, 2–3, 2–4, and 2–5; reasonable further progress in Tables 2–9 and 2–7; attainment demonstration in Chapter 3; and motor vehicle emissions budgets in ''2003 Coachella Valley PM–10 SIP On-Road Motor Vehicle Emissions Budgets.''

(B) [Reserved]

(ii) *Additional material.* (A) The following portions of the Final 2003 State and Federal Strategy (2003 State Strategy) for the California State Implementation Plan, adopted by the California Air Resources Board (ARB) on October 23, 2003:

(*1*) State agency commitments with respect to the following near-term defined measures for the South Coast Air Basin: LT/MED–DUTY–1 [Air Resources Board (ARB)], LT/MED–DUTY–2 (Bureau of Automotive Repair), ON–RD HVY–DUTY–1 (ARB), ON–RD HVY–DUTY–3 (ARB), OFF–RD CI–1 (ARB), OFF–RD LSI–1 (ARB), OFF–RD LSI–2 (ARB), SMALL OFF–RD–1 (ARB), SMALL OFF–RD–2 (ARB), MARINE–1 (ARB), MARINE–2 (ARB), FUEL–2 (ARB), CONS–1 (ARB), CONS–2 (ARB), FVR–1 (ARB), FVR–2 (ARB), and PEST–1 (Department of Pesticide Regulation) in Resolution 03–22 Attachments A–2, A–3, A–4 and A–6 Table I–7 and in 2003 State Strategy Section I Appendix I–1 and Sections II and III.

(B) The following portions of the South Coast 2003 Air Quality Management Plan (AQMP), adopted by the South Coast Air Quality Management District (SCAQMD) on August 1, 2003 and adopted by the California Air Resources Board on October 23, 2003:

(*1*) Base year and future year baseline planning inventories (summer and winter) in AQMP Chapter III and Appendix III; SCAQMD commitment to adopt and implement control measures CTS–07, CTS–10, FUG–05, MSC–01, MSC–03, PRC–07, WST–01, WST–02, FSS–04, FLX–01, CMB–10, MSC–05, MSC–07, MSC–08, FSS–06, and FSS–07 in AQMP Chapter 4, Table 4–1, as qualified and explained in AQMP, Chapter 4, pages 4–59 through 4–61 and in Appendix IV–A Section 1, and SCAQMD commitments to achieve near-term and long-term emissions reductions through rule adoption and implementation in AQMP

Chapter 4, Tables 4–8A and 4–8B; contingency measure CTY–01 in AQMP Chapter 9, Table 2 and in Appendix IV–A Section 2 (excluding FSS–05); nitrogen dioxide maintenance demonstration in AQMP Chapter 6 page 6–11; and motor vehicle emissions budget for nitrogen dioxide in year 2003 of 686 tons per day (winter planning inventory) in AQMP Chapter 6 Table 6–7.

(*2*) [Reserved]

(340) New and amended rules for the following agencies were submitted on November 16, 2004, by the Governor's designee.

(i) *Incorporation by reference.* (A) South Coast Air Quality Management District (SCAQMD).

(*1*) Amended Handbooks for Rules 403 (Chapters 5, 7, and 8) and 403.1 (Chapters 2, 3, 4, and 7), as adopted on April 2, 2004.

(B) Plan revisions for the Coachella Valley Planning Area.

(*1*) Fugitive dust control ordinances for: City of Cathedral City Ordinance No. 583 (1/14/04), City of Coachella Ordinance No. 896 (10/8/03), City of Desert Hot Springs Ordinance No. 2003–16 (10/7/03), City of Indian Wells Ordinance No. 545 (11/6/03), City of Indio Ordinance No. 1357 (12/3/03), City of La Quinta Ordinance No. 391 (12/2/03), City of Palm Desert Ordinance No. 1056 (11/13/03), City of Palm Springs Ordinance No. 1639 (11/5/03), City of Rancho Mirage Ordinances No. 855 (12/18/03) and No. 863 (4/29/04), and County of Riverside Ordinance No. 742.1 (1/13/04).

(341) The 2004 Revision to the California State Implementation Plan for Carbon Monoxide, Updated Carbon Monoxide Maintenance Plan for the Ten Federal Planning Areas, submitted on November 8, 2004 by the Governor's designee.

(i) *Incorporation by reference.* (A) California Air Resources Board.

(*1*) *2004 Revision to the California State Implementation Plan for Carbon Monoxide, Updated Maintenance Plan for Ten Federal Planning Areas*, adopted by the California Air Resources Board on July 22, 2004. The ten Federal planning areas include Bakersfield Metropolitan Area, Chico Urbanized Area, Fresno Urbanized Area, Lake Tahoe North Shore Area, Lake Tahoe South Shore Area, Modesto Urbanized Area, Sacramento Urbanized Area, San Diego Area, San Francisco-Oakland-San Jose Area, and Stockton Urbanized Area.

(342) New and amended regulations for the following APCDs were submitted on October 20, 2005, by the Governor's designee.

(i) *Incorporation by reference.* (A) Yolo-Solano Air Quality Management District.

(*1*) Rule 2.21, adopted on March 23, 1994, and amended on September 14, 2005.

(*2*) Previously approved on October 31, 2006 in paragraph (c)(342)(i)(A)(*1*) of this section and now deleted with replacement in paragraph (c)(497)(i)(D)(*1*) of this section, Rule 2.21 amended on September 14, 2005.

(B) San Joaquin Valley Unified Air Pollution Control District.

(*1*) Rule 4103, adopted on June 18, 1992 and amended on May 19, 2005.

(C) South Coast Air Quality Management District.

(*1*) Rule 461, adopted on January 9, 1976 and amended on June 3, 2005.

(*2*) Rules 2000, 2001, 2005, 2007, 2011 Protocol Appendix A Chapter 1, and 2012 Protocol Appendix A Chapter 1 adopted on May 6, 2005.

(*3*) Rule 463, adopted on August 15, 1977 and amended on May 6, 2005.

(*4*) Rule 403, adopted on May 7, 1976 and amended on June 3, 2005.

(*5*) Previously approved on August 29, 2006 in paragraph (c)(342)(i)(C)(*2*) of this section and now deleted with replacement in (c)(491)(i)(A)(*1*), Rule 2001, ''Applicability,'' amended on December 4, 2015.

(D) Great Basin Unified Air Pollution Control District.

(*1*) Rule 405, adopted on September 5, 1974 and revised on July 7, 2005.

(*2*) Rule 502, ''Conservation Management Practices,'' adopted on July 7, 2005.

(343) An amended regulation for the following AQMD was submitted on December 21, 2005, by the Governor's designee.

(i) *Incorporation by reference.* (A) South Coast Air Quality Management District.

(*1*) Rule 2002 adopted on January 7, 2005.

(344) New and amended regulations for the following APCDs were submitted on March 10, 2006, by the Governor's designee.

(i) *Incorporation by reference.* (A) Antelope Valley Air Quality Management District.

(*1*) Rule 442, adopted on May 7, 1976 and amended on November 15, 2005.

(*2*) Rule 101, ''Title,'' and Rule 102, ''Definition of Terms,'' originally adopted on February 4, 1977 and amended on May 17, 2005.

(*3*) Rule 106, ''Increments of Progress,'' Rule 210, ''Applications,'' Rule 212, ''Standards for Approving Permits,'' and Rule 218, ''Stack Monitoring,'' originally adopted on January 9, 1976 and amended on May 17, 2005.

(*4*) Rule 108, ''Alternative Emission Control Plans,'' Rule 109, ''Recordkeeping for Volatile Organic Compound Emissions,'' Rule 208, ''Permit for Open Burning,'' Rule 220, ''Exemption—Net Increase in Emissions,'' Rule 221, ''Plans,'' and Rule 226, ''Limitations on Potential to Emit,'' originally adopted on March 2, 1990, May 5, 1989, October 8, 1976, November 4, 1977, January 4, 1985, and March 17, 1998, respectively, and amended on May 17, 2005.

(B) Lake County Air Quality Management District.

(*1*) Chapter VIII, Section 1002 and Table 8, adopted on March 19, 1996 and amended on August 9, 2005.

(C) San Joaquin Valley Unified Air Quality Management District.

(*1*) Rule 4308, adopted on October 20, 2005; Rule 4309, adopted on December 15, 2005; and Rule 4905, adopted on October 20, 2005.

(*2*) Previously approved on May 30, 2007 in paragraph (c)(344)(i)(C)(*1*) of this section and now deleted with replacement in paragraph (c)(461)(i)(D)(*1*), Rule 4905, ''Natural-Gas-Fired Fan-Type Central Furnaces,'' adopted on October 20, 2005.

(D) Ventura County Air Pollution Control District.

(*1*) Rule 74.9, Stationary Internal Combustion Engines, adopted on November 8, 2005.

(345) New and amended regulations for the following APCDs were submitted on June 16, 2006, by the Governor's designee.

(i) *Incorporation by reference.* (A) South Coast Air Quality Management District.

(*1*) Rule 102, adopted on December 3, 2004.

(*2*) Rule 1178 adopted on December 21, 2001, and amended on April 7, 2006.

(B) Sacramento Metropolitan Air Quality Management District.

(*1*) Rule 411, adopted on October 27, 2005.

(C) Ventura County Air Pollution Control District.

(*1*) Rule 11, ''Definitions for Regulation II,'' and Rule 29, ''Conditions on Permits,'' adopted on June 13, 1995 and May 23, 1972, respectively, and revised on March 14, 2006.

(*2*) Rule 26, ''New Source Review—General,'' Rule 26.2, ''New Source Review—Requirements,'' Rule 26.3, ''New Source Review—Exemptions,'' Rule 26.4, ''New Source Review—Emissions Banking,'' Rule 26.5, ''New Source Review—Essential Public Service Bank,'' and Rule 26.6, ''New Source Review—Calculations,'' originally adopted on October 22, 1991 and now revised on March 14, 2006.

(D) Great Basin Unified Air Pollution Control District

(*1*) Rule 201, ''Exemptions,'' adopted on September 5, 1974 and revised on January 23, 2006.

(E) Imperial County Air Pollution Control District.

(*1*) Rule 800,''General Requirements for Control of Fine Particulate Matter (PM–10),'' adopted on October 10, 1994, revised on November 25, 1996 and revised on November 8, 2005.

(*2*) Rule 801,''Construction & Earthmoving Activities,'' Rule 802, ''Bulk Materials,'' Rule 803,''Carry-Out & Track-Out,'' Rule 804,''Open Areas,'' Rule 805,''Paved & Unpaved Roads,'' Rule 806,''Conservation Management Practices,'' adopted on November 8, 2005.

(346) New and amended plans for the following AQMD were submitted on February 24, 2006, by the Governor's designee.

(i) *Incorporation by reference.* (A) South Coast Air Quality Management District (SCAQMD).

(*1*) 2005 Carbon Monoxide Redesignation Request and Maintenance Plan for the South Coast Air Basin, as adopted

by SCAQMD on March 4, 2005, and by California Air Resources Board on February 24, 2006.

(347) New and amended regulations for the following APCDs were submitted on October 5, 2006, by the Governor's designee.

(i) *Incorporation by reference.* (A) San Joaquin Valley Unified Air Pollution Control District.

(*1*) Rule 4307, adopted on April 20, 2006.

(*2*) Rule 4352, ''Solid Fuel Fired Boilers, Steam Generators and Process Heaters,'' amended on May 18, 2006.

(B) South Coast Air Quality Management District.

(*1*) Rule 1118 adopted February 13, 1998, and amended November 4, 2005.

(*2*) Rule 1127, ''Emissions Reductions from Livestock Waste,'' adopted on August 6, 2004.

(C) Mojave Desert Air Quality Management District.

(*1*) Rule 442, Adopted: 5/7/76; CARB Ex. Ord. G–73: 02/01/77; Readopted: 07/25/77; Amended: 02/02/79; Amended: 02/27/06.

(D) Ventura County Air Pollution Control District.

(*1*) Rule 74.30, Wood Products Coatings, adopted May 17, 1994 and revised on June 27, 2006.

(E) Yolo Solano Air Quality Management District.

(*1*) Rule 11.2, ''Confined Animal Facilities Permit Program,'' adopted on June 14, 2006.

(348) New and amended rules for the following APCDs were submitted on December 29, 2006 by the Governor's designee.

(i) *Incorporation by reference.* (A) San Joaquin Valley Air Pollution Control District.

(*1*) Rule 4354, adopted on August 17, 2006.

(*2*) Rule 9310, ''School Bus Fleets,'' adopted on September 21, 2006.

(*3*) Rule 9510, ''Indirect Source Review (ISR),'' adopted on December 15, 2005.

(B) South Coast Air Quality Management District.

(*1*) Rule 1156, adopted on November 4, 2005.

(349) San Francisco Bay Area Transportation Air Quality Conformity Protocol—Conformity Procedures and Interagency Consultation Procedures was submitted on December 20, 2006, by the Governor's designee.

(i) *Incorporation by reference.* (A) Association of Bay Area Governments (ABAG), Bay Area Air Quality Management District (BAAQMD), and Metropolitan Transportation Commission (MTC).

(*1*) The San Francisco Bay Area Transportation Air Quality Conformity Protocol—Conformity Procedures (July 26, 2006) and San Francisco Bay Area Transportation Air Quality Conformity Protocol—Interagency Consultation Procedures (July 26, 2006), adopted by BAAQMD on July 19, 2006, by ABAG on July 20, 2006, and by MTC on July 26, 2006.

(350) New and amended regulations were submitted on May 8, 2007, by the Governor's designee.

(i) *Incorporation by reference.* (A) Great Basin Unified Air Pollution Control District.

(*1*) Rule 431, adopted on December 7, 1990 and revised on December 4, 2006.

(*2*) Rule 401, ''Fugitive Dust'', adopted on September 5, 1974 and amended on December 04, 2006.

(*3*) Previously approved on October 31, 2007 in paragraph (c)(350)(i)(A)(1) of this section and now deleted with replacement in paragraph (c)(457)(i)(I)(*1*) of this section, Rule 431, adopted on December 7, 1990 and revised on December 4, 2006.

(B) Mojave Desert Air Quality Management District.

(*1*) Rule 444, adopted on October 8, 1976 and amended on September 25, 2006.

(*2*) Rule 1106, Marine Coating Operations, adopted on August 28, 2006 and amended on October 23, 2006.

(*3*) Previously approved on July 16, 2008 in paragraph (c)(350)(i)(B)(2) of this section and now deleted with replacement in (c)(498)(i)(B)(1), Rule 1106, adopted on August 28, 2006 and amended on October 23, 2006.

(C) San Joaquin Valley Unified Air Pollution Control District.

(*1*) Rule 4702, adopted on August 21, 2003 and amended on January 18, 2007.

(*2*) Rule 4401, ''Steam-Enhanced Crude Oil Production Wells,'' adopted on December 14, 2006.

(*3*) Previously approved on January 10, 2008 in paragraph(c)(350)(i)(C)(*1*) of

this section and now deleted with replacement in paragraph (c)(441)(i)(D)(*4*), Rule 4702, ''Internal Combustion Engines,'' amended on January 18, 2007.

(D) South Coast Air Quality Management District.

(*1*) Rule 1107, Coating of Metal Parts and Products, adopted on June 1, 1979, and amended on January 6, 2006.

(E) Ventura County Air Pollution Control District.

(*1*) Rule 26.1, ''New Source Review—Definitions,'' originally adopted on October 22, 1991 and now revised on November 14, 2006.

(351) New and amended regulation for the following APCDs were submitted on August 24, 2007, by the Governor's designee.

(i) *Incorporation by reference.* (A) Imperial County Air Pollution Control District.

(*1*) Rule 101, Adopted 7/28/81; revised 9/14/99; 1/16/2001; 12/11/2001; 08/13/02; 01/11/2005; 10/10/2006.

(*2*) Rule 420, ''Beef Feedlots,'' adopted on October 10, 2006.

(*3*) Rule 201, ''Permits Required'' amended on October 10, 2006.

(*4*) Rule 202, ''Exemptions'' amended on October 10, 2006.

(*5*) Previously approved on May 9, 2011 in paragraph (c)(351)(i)(A)(*4*) of this section and now deleted with replacement in paragraph (c)(485)(i)(A)(*2*), Rule 202, ''Exemptions,'' revised on October 10, 2006.

(B) Monterey Bay Unified Air Pollution Control District.

(*1*) Rule 101, Adopted 9–1–74; Revised 12–21–83; 12–13–84; 11–13–96; 11–12–98; and 12–15–1999; and 4–16–03; and 2–21–07.

(*2*) Rules 415 and 418, adopted on September 1, 1974 and revised on February 21, 2007 and March 21, 2007, respectively.

(*3*) Rule 1002, adopted on February 22, 1989 and revised on March 21, 2007.

(C) San Joaquin Valley Unified Air Pollution Control District.

(*1*) Rule 4104, ''Reduction of Animal Matter,'' Rule 4404, ''Heavy Oil Test Station—Kern County,'' adopted May 21, 1992 and amended on December 17, 1992.

(*2*) Rule 4641, ''Cutback, Slow Cure, and Emulsified Asphalt, Paving and Maintenance Operations,'' Rule 4672, ''Petroleum Solvent Dry Cleaning Operations,'' adopted April 11, 1991 and amended on December 17, 1992.

(*3*) Rule 4453, ''Refinery Vacuum Producing Devices or Systems,'' adopted on May 21, 1992 and amended on December 17, 1992.

(*4*) Rule 4454, ''Refinery Process Unit Turnaround,'' adopted on May 21, 1992 and amended on December 17, 1992.

(*5*) Rule 4402, ''Crude Oil Production Sumps'', adopted on April 11, 1991 and amended December 17, 1992.

(*6*) Rule 4625, ''Wastewater Separators'', adopted on April 11, 1991 and amended December 17, 1992.

(*7*) Rule 4565, ''Biosolids, Animal Manure, and Poultry Litter Operations'', adopted on March 15, 2007.

(D) Kern County Air Pollution Control District.

(*1*) Rule 404.1, adopted on April 18, 1972 and amended on January 24, 2007.

(*i*) Resolution No. *2007–001–01*, Reference No. *Item 5*, Adoption of Amendments to Rules and Regulations of the Kern County Air Pollution Control District; to Wit: Rule 404.1.

(*2*) Rule 431, adopted on January 24, 2007 and amended on March 8, 2007.

(*i*) Resolution No. *2007–003–03*, Reference No. *Item 3*, Amendments to Rules and Regulations of the Kern County Air Pollution Control District; To Wit: Rule 431 (Propellant Combustion and Rocket Testing).

(352) New and amended regulations were submitted on September 5, 2007, by the governor's designee.

(i) *Incorporation by reference.* (A) Sacramento Metropolitan Air Quality Management District.

(*1*) Rule 413, adopted on April 6, 1995 and amended on March 24, 2005.

(353) New and amended regulations were submitted on August 12, 2002, by the Governor's designee.

(i) *Incorporation by reference.* (A) Bay Area Air Quality Management District.

(*1*) Rule 9–10, Inorganic Gaseous Pollutants: Nitrogen Oxides and Carbon Monoxide from Boilers, Steam Generators, and Process Heaters in Petroleum Refineries, adopted on July 17, 2002.

(354) New and amended regulations for the following APCDs were submitted on March 7, 2008, by the Governor's designee.

(i) *Incorporation by reference.* (A) South Coast Air Quality Management District.

(*1*) Rule 2004, ''Requirements'' adopted on October 15, 1993 and amended on April 6, 2007.

(*2*) Rule 2007, ''Trading Requirements'' adopted on October 15, 1993 and amended April 6, 2007.

(*3*) Rule 2010, ''Administrative Remedies and Sanctions'' adopted on October 15, 1993 and amended on April 6, 2007.

(*4*) Rule 1146.2, ''Emissions of Oxides of Nitrogen From Large Water Heaters and Small Boilers and Process Heaters,'' adopted on January 8, 1998 and amended on May 5, 2006.

(*5*) Rule 1113, ''Architectural Coatings,'' amended on July 13, 2007.

(B) Mojave Desert Air Quality Management District.

(*1*) Rule 1162, Polyester Resin Operationss, adopted on August 27, 2007

(C) Sacramento Metropolitan Air Quality Management District

(*1*) Rule 411, ''NOx from Boilers, Process Heaters and Steam Generators'' adopted on October 27, 2005 and amended on August 23, 2007.

(D) Monterey Bay Unified Air Pollution Control District.

(*1*) Rule 427, ''Steam Drive Crude Oil Production Wells,'' adopted on January 16, 1980 and amended on October 17, 2007.

(E) San Joaquin Valley Unified Air Pollution Control District

(*1*) Rule 4662, ''Organic Solvent Degreasing Operations,'' Adoption April 11, 1991 and amended September 20, 2007

(*2*) Rule 4663, ''Organic Cleaning Storage, and Disposal,'' Adoption December 20, 2001 and amended September 20, 2007

(*3*) Rule 4624, ''Transfer of Organic Liquid,'' adopted on December 20, 2007.

(*4*) Rule 4653, ''Adhesives,'' adopted on September 20, 2007.

(*5*) Rule 4703, ''Stationary Gas Turbines,'' adopted on September 20, 2007.

(*6*) Rule 4621, ''Gasoline Transfer into Stationary Storage Containers, Delivery Vessels, and Bulk Plants,'' amended on December 20, 2007.

(*7*) Rule 4622, ''Gasoline Transfer into Motor Vehicle Fuel Tanks,'' amended on December 20, 2007.

(*8*) Rule 4651, ''Soil Decontamination Operations,'' amended on September 20, 2007.

(*9*) Rule 4604, ''Can and Coil Coating Operations,'' adopted on September 20, 2007.

(*10*) Rule 4612, ''Motor Vehicle and Mobile Equipment Coating Operations-Phase II,'' adopted on September 20, 2007.

(*11*) Rule 4605, ''Aerospace Assembly and Component Coating Operations,'' adopted on September 20, 2007.

(*12*) 4684, ''Polyester Resin Operations,'' adopted on September 20, 2007.

(*13*) Rule 4661, ''Organic Solvents,'' amended on September 20, 2007.

(*14*) Rule 2020, ''Exemptions,'' adopted on September 19, 1991 and amended on December 20, 2007.

(F) San Diego Air Pollution Control District.

(*1*) Rule 67.6.1, ''Cold Solvent Cleaning and Stripping Operations,'' adopted May 23, 2007.

(*2*) Rule 67.6.2, ''Vapor Degreasing Operations,'' adopted May 23, 2007.

(*3*) Rule 67.0, ''Architectural Coatings,'' adopted on December 12, 2001.

(*4*) Previously approved on June 20, 2013, in paragraph (c)(354)(i)(F)(*3*) of this section and now deleted without replacement, Rule 67.0, ''Architectural Coatings,'' adopted on December 12, 2001.

(G) Northern Sierra Air Quality Management District.

(*1*) Rule 227, ''Cutback and Emulsified Asphalt Paving Materials,'' adopted on November 27, 2006.

(355) The following plan revision was submitted on November 30, 2007, by the Governor's designee.

(i) *Incorporation by reference.* (A) California Air Resources Board.

(*1*) Attachment 3 to Executive Order S–07–003, Appendix H, Revised Proposed Revision to the Pesticide Element of the 1994 Ozone SIP for the Ventura County Nonattainment Area (August 13, 2007).

(*2*) California Air Resources Board, Executive Order S–07–003, November 30, 2007; to Wit: Revised Pesticide Element of the 1994 Ozone SIP for the Ventura County Nonattainment Area.

(356) The following plan was submitted on November 16, 2007, by the Governor's Designee.

(i) *Incorporation by reference.* (A) San Joaquin Valley Air Pollution Control District.

(*1*) 2007 PM10 Maintenance Plan and Request for Redesignation, adopted by the San Joaquin Valley Air Pollution Control District on September 20, 2007, section 6. Contingency Plan on pages 16 to 17.

(ii) *Additional materials.* (A) San Joaquin Valley Air Pollution Control District.

(*1*) 2007 PM10 Maintenance Plan and Request for Redesignation, adopted by the San Joaquin Valley Air Pollution Control District on September 20, 2007, except for Appendices A through F.

(*2*) State of California, Air Resources Board, Staff Report, Analysis of the San Joaquin Valley 2007 PM10 Maintenance Plan, Release Date: October 12, 2007, Appendix B Emission Inventory.

(*3*) Letter dated May 13, 2008, from James N. Goldstene, California Air Resources Board, to Wayne Nastri, EPA, providing revised motor vehicle emission budgets for the 2007 San Joaquin Valley PM10 Maintenance Plan.

(B) State of California Air Resources Board.

(*1*) Proposed State Strategy for California's 2007 State Implementation Plan, adopted on September 27, 2007.

(*2*) CARB Resolution No. 07–28 with Attachments A and B, September 27, 2007. Commitment to achieve the total emissions reductions necessary to attain the Federal standards in the SJV air basin, which represent 2.3 tons per day (tpd) of direct $PM_{2.5}$ and 17.1 tpd of nitrogen oxides by 2014 for purposes of the 1997 $PM_{2.5}$ NAAQS, as described in Resolution No. 07–28 at Attachment B, pp. 3–6, and modified by CARB Resolution No. 09–34 (April 24, 2009) adopting ''Status Report on the State Strategy for California's 2007 State Implementation Plan (SIP) and Proposed Revisions to the SIP Reflecting Implementation of the 2007 State Strategy'' and by CARB Resolution No. 11–24 (April 28, 2011) adopting the ''Progress Report on Implementation of $PM_{2.5}$ State Implementation Plans (SIP) for the South Coast and San Joaquin Valley Air Basins and Proposed SIP Revisions.''

(*3*) Executive Order S–07–002, Relating to Approval of the State Strategy for California's State Implementation Plan (SIP) for the Federal 8-Hour Ozone and $PM_{2.5}$ Standards, November 16, 2007.

(*4*) CARB Resolution No. 07–28 with Attachments A and B, September 27, 2007. Commitments to achieve the total emissions reductions necessary to attain the Federal standards in the SJV air basin, which represent aggregate emissions reductions of 24 tons per day (tpd) of volatile organic compounds (VOC) and 46 tpd of nitrogen oxides (NO_X) by 2023 from existing technologies and 81 tpd of NO_X by 2023 from new technologies and to achieve 23 tpd of VOC by 2014; 88–93 tpd of NO_X by 2017; 24 tpd of VOC and 56 tpd of NO_X by 2020 as provided in CARB Resolution 07–28, Attachment B, pp. 3–6 as modified by the 2009 State Strategy Status Report, pp. 20–21 as adopted by CARB Resolution No. 09–34 (April 24, 2009).

(357) The following commitments were submitted on February 29, 2008, by the Governor's Designee:

(i) *Incorporation by reference.* (A) Commitments for the installation and operation of a FRM or FEM PM–10 monitor and SIP development and submittal.

(*1*) Resolution No. 2008–001–02, adopted by the Air Pollution Control Board, Kern County Air Pollution Control District on February 27, 2008.

(*2*) Executive Order S–08–004, adopted by the California Air Resources Board on March 3, 2008.

(358) The 8–Hour Ozone Reasonable Available Control Technology State Implementation Plans (RACT)(SIP) for the following Air Quality Management Districts (AQMDs)/Air Pollution Control Districts (APCDs) were submitted on January 31, 2007, by the Governor's designee.

(i) *Incorporation by reference.* (A) South Coast Air Quality Management District.

(*1*) Resolution 06–24 (A Resolution of the South Coast Air Quality Management District (SCAQMD) Board certifying that the SCAQMD's current air pollution rules and regulations fulfill the 8-hour Reasonably Available Control Technology (RACT) requirements, and adopting the RACT SIP revision, dated July 14, 2006.

(*2*) South Coast Air Quality Management District (SCAQMD) Staff Report,

SCAQMD 8–Hour Ozone Reasonably Available Control Technology (RACT) State Implementation Plan (SIP) Demonstration, including appendices, dated June 2006.

(*3*) Notice of Exemption from the California Environmental Quality Act, SCAQMD 8–Hour Ozone Reasonably Available Control Technology (RACT) State Implementation Plan (SIP), dated June 2, 2006.

(*4*) EPA comment letter to South Coast Air Quality Management District dated June 28, 2006, on 8-hour Ozone Reasonably Available Control Technology—State Implementation Plan (RACT SIP) Analysis, draft staff report dated May 2006, from Andrew Steckel, Chief, Rulemaking Office, U.S. EPA to Mr. Joe Cassmassi, Planning and Rules Manager, South Coast Air Quality Management District.

(B) Ventura County Air Pollution Control District.

(*1*) Ventura County Air Pollution Control Board Resolution approving and adopting the 2006 Reasonably Available Control Technology State Implementation Plan Revision, dated June 27, 2006.

(*2*) Final Ventura County Air Pollution Control District 2006 Reasonably Available Control Technology (RACT) State Implementation Plan (SIP) Revision, including Tables A–1, A–2, B, C, and D, dated June 27, 2006.

(ii) *Additional materials.* (A) Antelope Valley Air Quality Management District.

(*1*) 8-Hour Reasonably Available Control Technology—State Implementation Plan Analysis (RACT SIP Analysis), August 2006, adopted on September 19, 2006.

(*2*) [Reserved]

(B) Yolo-Solano Air Quality Management District.

(*1*) Reasonably Available Control Technology (RACT) State Implementation Plan (SIP), adopted on September 13, 2006.

(*2*) [Reserved]

(359) New and amended regulations were submitted on July 18, 2008, by the Governor's designee.

(i) *Incorporation by reference.* (A) North Coast Unified Air Quality Management District.

(*1*) Rule 104.2, ''Visible Emissions,'' Rule 104.3, ''Particulate Matter,'' Rule 104.4, ''Fugitive Dust Emissions,'' and Rule 104.10, ''Petroleum Loading and Storage,'' originally adopted on November 3, 1982 and revised on May 19, 2005.

(*2*) Rule 200, ''Effective Date and Definitions,'' Rule 202, ''Burn Hours and Notice of Ignition,'' Rule 203, ''General Burn Practices, Requirements, and Conditions,'' Rule 204, ''Ignition Devices and Methods,'' Rule 207, ''Wildland Vegetation Management,'' and Rule 208, ''Burn Registration Program,'' originally adopted on July 18, 2003 and revised on May 15, 2005; Rule 201, ''General Prohibitions and Exemptions for Selected Open Burning'' originally adopted on July 18, 2003 and revised on May 17, 2007; Rule 205, ''Certificates from Department of Fish and Game,'' adopted on July 18, 2003; and Rule 206, ''Burning at Disposal Sites,'' originally adopted on July 18, 2003 and revised on December 16, 2004.

(*3*) Rule 100, ''General Provisions,'' originally adopted on November 3, 1982 and amended on May 19, 2005.

(*4*) Rule 101, ''Definitions,'' originally adopted on November 3, 1982 and amended on May 19, 2005 and May 15, 2008.

(*5*) Rule 108, ''Severability of Rules and Regulations,'' originally adopted on May 19, 2005.

(B) South Coast Air Quality Management District

(*1*) Rule 1121, ''Fuel Burning Equipment,'' adopted on December 10, 1999 and amended on September 3, 2004.

(*2*) Rule 445, ''Wood Burning Devices,'' adopted on March 7, 2008.

(C) Placer County Air Pollution Control District.

(*1*) Rule 212, ''Storage of Organic Liquids,'' adopted on May 24, 1977 and amended on June 19, 1997.

(*2*) Rule 216, ''Organic Solvent Cleaning and Degreasing Operations,'' amended on December 11, 2003.

(*3*) Rule 215, ''Transfer of Gasoline Into Trucks, Trailers, and Railroad Tank Cars at Loading Facilities,'' adopted on June 19, 1997.

(D) Antelope Valley Air Quality Management District.

(*1*) Rule 444, ''Open Outdoor Fires,'' adopted on October 8, 1976 and revised on February 19, 2008.

(E) Santa Barbara County Air Pollution Control District.

(*1*) Rule 361, ''Small Boilers, Steam Generators and Process Heaters,'' adopted on January 17, 2008.

(F) San Diego County Air Pollution Control District.

(*1*) Rule 61.4, ''Transfer of Volatile Organic Compounds into Vehicle Fuel Tanks,'' revised on March 26, 2008.

(360) New and amended regulations were submitted on May 20, 2008 by the Governor's designee.

(i) *Incorporation by Reference.* (A) South Coast Air Quality Management District

(*1*) Rule 1110.2, ''Gaseous- and Liquid-Fueled Internal Combustion Engines, adopted on August 3, 1990 and amended February 1, 2008.

(361) New and amended regulations were submitted on October 20, 2008, by the governor's designee.

(i) *Incorporation by Reference.* (A) Santa Barbara County Air Pollution Control District.

(*1*) Rule 102, ''Definitions,'' adopted on October 18, 1971 and revised on June 19, 2008.

(*2*) Rule 333, ''Control of Emissions from Reciprocating Internal Combustion Engines,'' adopted on June 19, 2008.

(*3*) Rule 339, ''Motor Vehicle and Mobile Equipment Coating Operations,'' revised on June 19, 2008.

(*4*) Rule 201, ''Permits Required,'' revised June 19, 2008.

(B) Antelope Valley Air Quality Management District

(1) Rule 1173, ''Fugitive Emissions of Volatile Organic Compounds,'' adopted July 7, 1989 and amended June 17, 2008.

(362) New and amended regulations were submitted on April 29, 2009 by the Governor's designee.

(i) *Incorporation by Reference.* (A) San Diego Air Pollution Control District.

(*1*) Rule 27.1, ''Federal Requirements for the San Diego County Air Pollution Control District's Alternative Mobile Source Emission Reduction Program Approved On September 8, 2000,'' adopted and effective on August 8, 2008.

(B) South Coast Air Quality Management District.

(*1*) Rule 1168, ''Adhesive and Sealant Applications,'' amended on January 7, 2005.

(*2*) Rule 1156, ''Further Reductions of Particulate Emissions from Cement Manufacturing Facilities,'' amended on March 6, 2009.

(C) Sacramento Metropolitan Air Quality Management District.

(*1*) Rule 450, ''Graphic Arts Operations,'' adopted October 23, 2008.

(D) San Joaquin Valley Air Pollution Control District.

(*1*) Rule 4902, ''Residential Water Heaters,'' amended on March 19, 2009.

(363) New and amended regulations were submitted on March 17, 2009 by the Governor's designee.

(i) *Incorporation by Reference.* (A) San Joaquin Valley Unified Air Pollution Control District.

(*1*) Rule 1020, ''Definitions,'' adopted on June 18, 1992 and amended on January 15, 2009.

(*2*) Rule 4607, ''Graphic Arts and Paper, Film, Foil, and Fabric Coatings,'' adopted on December 18, 2008.

(*3*) Rule 4306, ''Boilers, Steam Generators and Process Heaters—Phase 3, '' adopted on October 16, 2008.

(*4*) Rule 4307, ''Boilers, Steam Generators and Process Heaters—2.0 MMbtu/hr to 5.0 MMbtu/hr,'' adopted on October 16, 2008.

(*5*) Rule 2201, ''New and Modified Stationary Source Review Rule,'' adopted on September 19, 1991, and amended on December 18, 2008.

(*6*) Rule 2530, ''Federally Enforceable Potential to Emit,'' adopted on June 15, 1995, and amended on December 18, 2008.

(*7*) Rule 4320, ''Advance Emission Reduction Options for Boilers, Steam Generators and Process Heaters greater than 5.0 MMbtu/hr,'' adopted on October 16, 2008.

(B) Santa Barbara County Air Pollution Control District.

(*1*) Rule 102, ''Definitions,'' adopted on October 18, 1971 and amended on January 15, 2009.

(*2*) Rule 316, ''Storage and Transfer of Gasoline,'' adopted on January 15, 2009.

(C) Yolo Solano Air Quality Management District

(*1*) Rule 3.21, ''Rice Straw Emission Reduction Credits,'' adopted on December 10, 2008.

(D) Placer County Air Pollution Control District.

(*1*) Rule 231, ''Industrial, Institutional and Commercial Boiler, Steam Generator and Process Heaters,'' amended on October 9, 1997.

(E) Ventura County Air Pollution Control District.

(*1*) Rule 74.18, ''Motor Vehicle and Mobile Equipment Coating Operations,'' revised on November 11, 2008.

(F) South Coast Air Quality Management District.

(*1*) Rule 223, ''Emission Reduction Permits for Large Confined Animal Facilities,'' adopted on June 2, 2006.

(364) New and amended regulations were submitted on December 23, 2008 by the Governor's designee.

(i) *Incorporation by Reference.* (A) San Joaquin Valley Unified Air Pollution Control District.

(*1*) Rule 4606, ''Wood Products and Flat Wood Paneling Product Coating Operations,'' adopted on October 16, 2008.

(*2*) Rule 4901, ''Wood Burning Fireplaces and Wood Burning Heaters,'' amended on October 16, 2008.

(*3*) Rule 4603, ''Surface Coating of Metal Parts and Products,'' adopted on October 16, 2008.

(*4*) Previously approved on October 11, 2009 in paragraph (c)(364)(i)(A)(*2*) of this section and now deleted with replacement in paragraph (c)(457)(i)(H)(*1*), Rule 4901, ''Wood Burning Fireplaces and Wood Burning Heaters,'' amended on October 16, 2008.

(B) South Coast Air Quality Management District.

(*1*) Rule 1158, ''Storage, Handling, and Transport of Coke, Coal and Sulfur,'' amended July 11, 2008.

(*2*) Rule 1186, ''PM_{10} Emissions from Paved and Unpaved Roads and Livestock Operations,'' amended on July 11, 2008.

(C) Yolo-Solano Air Quality Management District.

(*1*) Rule 2.41, ''Expandable Polystyrene Manufacturing Operations,'' adopted on September 10, 2008.

(D) Mojave Desert Air Quality Management District.

(*1*) Rule 1165, ''Glass Melting Furnaces,'' amended on August 25, 2008.

(365) New and amended regulations were submitted on March 27, 2008, by the Governor's designee.

(i) *Incorporation by Reference.* (A) California Air Resources Board.

(*1*) Barclays Official California Code of Regulations, Title 17 Public Health, Division 3 Air Resources, Chapter 1 Air Resources Board, Subchapter 8.5 Consumer Products, Article 1 Antiperspirants and Deodorants, amendment filed 6–20–2005, operative 7–20–2005.

(*2*) Barclays Official California Code of Regulations, Title 17 Public Health, Division 3 Air Resources, Chapter 1 Air Resources Board, Subchapter 8.5 Consumer Products, Article 2 Consumer Products, amendment filed 11–8–2007, operative 12–8–2007.

(*3*) Barclays Official California Code of Regulations, Title 17 Public Health, Division 3 Air Resources, Chapter 1 Air Resources Board, Subchapter 8.5 Consumer Products, Article 3 Aerosol Coating Products, amendment filed 11–8–2007, operative 12–8–2007.

(366) New and amended regulations for the following agencies were submitted on April 6, 2009, by the Governor's designee.

(i) *Incorporation by reference.* (A) San Joaquin Valley Unified Air Pollution Control District.

(*1*) Rule 4103, ''Open Burning,'' amended May 17, 2007.

(B) South Coast Air Quality Management District.

(*1*) Rule 1125, ''Metal Container, Closure, and Coil Coating Operations,'' amended on March 7, 2008.

(*2*) Rule 1149, ''Storage Tank and Pipeline Cleaning and Degassing,'' amended on May 2, 2008.

(*3*) Rule 1162, ''Polyester Resin Operations,'' amended on July 8, 2005.

(*4*) Rule 1151, ''Motor Vehicle and Mobile Equipment Non-Assembly Line Coating Operations,'' amended on December 2, 2005.

(C) Antelope Valley Air Quality Management District.

(*1*) Rule 461, ''Gasoline Transfer and Dispensing,'' adopted on October 21, 2008.

(D) Placer County Air Pollution Control District.

(*1*) Rule 516, ''Rice Straw Emission Reduction Credits,'' adopted on February 19, 2009.

(367) The following plan was submitted on December 19, 2007, by the Governor's Designee.

(i) [Reserved]

(ii) *Additional material.* (A) Monterey Bay Unified Air Pollution Control District (MBUAPCD).

(*1*) 2007 Federal Maintenance Plan for Maintaining the National Ozone Standard in the Monterey Bay Region (Monterey Maintenance Plan), excluding Appendix A.

(*2*) MBUAPCD Board of Directors Certified Minutes and Resolution dated March 21, 2007, adopting the Monterey Maintenance Plan.

(*3*) Letter dated May 10, 2007, from Association of Monterey Bay Area Governments (AMBAG) to MBUAPCD, confirming AMBAG's approval of the Monterey Maintenance Plan on May 9, 2007.

(*4*) California Air Resources Board Executive Order # G–07–68, dated December 19, 2007, adopting the Monterey Maintenance Plan.

(368) New and amended regulations were submitted on June 26, 2009 by the Governor's designee.

(i) *Incorporation by Reference.* (A) San Joaquin Valley Unified Air Pollution Control District.

(*1*) Rule 4570, ''Confined Animal Facilities,'' adopted on June 18, 2009.

(369)–(370) [Reserved]

(371) [Reserved]

(372) The following revisions to the California Motor Vehicle Inspection and Maintenance Program were submitted on June 5, 2009 (2009 I/M Revision), by the Governor's Designee.

(i) *Incorporation by reference.* (A) California Air Resources Board. (*1*) California Code of Regulations, Title 16 (Professional and Vocational Regulations), Division 33 (Bureau of Automotive Repair), Chapter 1 (Automotive Repair Dealers and Official Stations and Adjusters), Article 1 (General Provisions), sections 3303.1, ''Public Access to License, Administrative Action, and Complaint Information'' (operative July 20, 2007); 3303.2, ''Review of Applications for Licensure, Registration and Certification; Processing Time'' (operative July 9, 2003); Article 5.5 (Motor Vehicle Inspection Program), sections 3340.1, ''Definitions'' (operative June 29, 2006); 3340.7, ''Fee for Inspection at State-Contracted Test-Only Facility'' (operative August 17, 1995); 3340.9, ''Repair Assistance Program'' (operative October 30, 2000); 3340.10, ''Licensing of Smog Check Stations'' (operative July 26, 1996); 3340.15, ''General Requirements for Smog Check Stations'' (operative July 9, 2003); 3340.16, ''Test-Only Station Requirements'' (operative August 1, 2007); 3340.16.5, ''Test-and-Repair Station Requirements'' (operative June 29, 2006); 3340.17, ''Test Equipment, Electronic Transmission, Maintenance and Calibration Requirements'' (operative June 29, 2006); 3340.18, ''Certification of Emissions Inspection System Calibration Gases and Blenders of Gases'' (operative July 9, 2003); 3340.22.1, ''Smog Check Station Service Signs'' (operative February 1, 2001); 3340.22.2, ''Smog Check Station Repair Cost Limit Sign'' (operative February 1, 2001); 3340.23, ''Licensed Smog Check Station That Ceases Operating As a Licensed Station'' (operative June 23, 1995); 3340.24, ''Suspension, Revocation, and Reinstatement of Licenses'' (operative June 23, 1995); 3340.28, ''Licenses and Qualifications for Technicians'' (operative January 17, 2009); 3340.29, ''Licensing of Technicians'' (operative January 17, 2009); 3340.30, ''General Requirements for Licensed Technicians'' (operative June 23, 1995); 3340.31, ''Retraining of Licensed Technicians'' (operative June 23, 1995); 3340.32, ''Standards for the Certification of Institutions Providing Retraining to Licensed Technicians or Prerequisite Training to Those Seeking to Become Licensed Technicians'' (operative July 9, 2003); 3340.32.1, ''Standards for the Decertification and Recertification of Institutions Providing Retraining to Licensed Technicians or Prerequisite Training to Those Seeking to Become Licensed Technicians'' (operative June 23, 1995); 3340.33, ''Standards for the Certification of Basic and Advanced Instructors Providing Retraining to Intern, Basic Area, and Advanced Emission Specialist Licensed Technicians or Prerequisite Training to Those Seeking to Become Intern, Basic Area, or Advanced Emission Specialist Licensed Technicians'' (operative February 1,

2001); 3340.33.1, ''Standards for the Decertification and Recertification of Instructors Providing Retraining to Licensed Technicians or Prerequisite Training to Those Seeking to Become Licensed Technicians'' (operative June 23, 1995); 3340.35, ''A Certificate of Compliance, Noncompliance, Repair Cost Waiver or an Economic Hardship Extension'' (operative June 25, 1998); 3340.35.1, ''A Certificate of Compliance, Noncompliance, Repair Cost Waiver or an Economic Hardship Extension Fee Calculation'' (operative December 2, 1998); 3340.36, ''Clearing Enforcement Forms'' (operative July 26, 1996); 3340.37, ''Installation of Oxides of Nitrogen (NOx) Devices)'' (operative July 26, 1996); 3340.41, ''Inspection, Test, and Repair Requirements'' (operative June 29, 2006); 3340.42, ''Mandatory Smog Check Inspection and Test Procedures, and Emissions Standards'' (operative January 11, 2008); 3340.50, ''Fleet Facility Requirements'' (operative February 15, 2002); 3340.50.3, ''Fleet Records and Reporting Requirements'' (operative June 23, 1995); 3340.50.4, ''Fleet Certificates'' (operative June 25, 1998); 3340.50.5 ''Suspension or Rescission of Fleet Facility License'' (operative June 23, 1995); Article 10 (Gold Shield Program), sections 3392.1, ''Gold Shield Program (GSP)'' (operative May 28, 2003); 3392.2, ''Responsibilities of Smog Check Stations Certified as Gold Shield'' (operative August 1, 2007); 3392.3, ''Eligibility for Gold Shield Certification; Quality Assurance'' (operative May 28, 2003); 3392.4, ''Gold Shield Guaranteed Repair (GSGR) Program Advertising Rights'' (operative May 28, 2003); 3392.5, ''Causes for Invalidation of Gold Shield Station Certification'' (operative May 28, 2003); 3392.6, ''Gold Shield Program Hearing and Determination'' (operative May 28, 2003); Article 11 (Consumer Assistance Program), sections 3394.1, ''Purpose and Components of the Consumer Assistance Program'' (operative October 30, 2000); 3394.2, ''Consumer Assistance Program Administration'' (operative October 30, 2000); 3394.3, ''State Assistance Limits'' (operative October 30, 2000); 3394.4, ''Eligibility Requirements'' (operative August 12, 2008); 3394.5, ''Ineligible Vehicles'' (operative October 30, 2000); 3394.6, ''Application and Documentation Requirements'' (operative July 31, 2006).

(ii) *Additional material.* (A) California Air Resources Board. (*1*) Executive Order S–09–008, dated June 9, 2009, adopting the 2009 I/M Revision.

(*2*) Non-regulatory portion of the Revised State Implementation Plan for California's Motor Vehicle Inspection & Maintenance Program (April 7, 2009), excluding chapter 51.351 (except as it applies to the San Francisco Bay Area), chapter 51.352, and attachments 4 and 5.

(*3*) Health and Safety Code (2009): Division 26, Part 1, Chapter 2, section 39032.5; Part 5, Chapter 5 (Motor Vehicle Inspection Program), Articles 1–9.

(*4*) Business and Professions Code (2008): Division 3, Chapter 20.3 (Automotive Repair), Article 4, sections 9886, 9886.1, 9886.2, 9886.3, 9886.4.

(*5*) Vehicle Code (2009): Division 3, Chapter 1 (Original and Renewal of Registration; Issuance of Certificates of Title), Article 1, sections 4000.1, 4000.2, 4000.3, 4000.6.

(373) The following revisions to the California Motor Vehicle Inspection and Maintenance Program were submitted on October 28, 2009, by the Governor's Designee.

(i) [Reserved]

(ii) *Additional material.* (A) California Air Resources Board. (*1*) California I/M Program SIP Revision—Additional Enhanced I/M Performance Modeling, Tables of Results, excluding New Mobile 6 Input and Output Files and New Registration Distribution Files.

(374) The following revisions to the California Reformulated Gasoline Regulations were submitted on June 15, 2004 (2004 RFG Revision), by the Governor's Designee.

(i) *Incorporation by reference.* (A) California Air Resources Board.

(*1*) Title 13, California Code of Regulations, Division 3 (Air Resources Board), Chapter 5 (Standards for Motor Vehicle Fuels), Article 1 (Standards for Gasoline), Subarticle 1 (Gasoline Standards That Became Applicable Before 1996), sections 2253.4, ''Lead in Gasoline'' (operative August 12, 1991); 2254, ''Manganese Additive Content'' (operative August 12, 1991); 2257, ''Required Additives in Gasoline'' (operative July 16, 1999); 2259, ''Exemptions for Motor

Vehicle Fuels Used in Test Programs'' (operative February 15, 1995); Subarticle 2 (Standards for Gasoline Sold Beginning March 1, 1996), sections 2260, ''Definitions'' (operative May 1, 2003); 2261, ''Applicability of Standards; Additional Standards'' (operative May 1, 2003); 2262, ''The California Reformulated Gasoline Phase 2 and Phase 3 Standards'' (operative December 24, 2002); 2262.3, ''Compliance With the CaRFG Phase 2 and CaRFG Phase 3 Standards for Sulfur, Benzene, Aromatic Hydrocarbons, Olefins, T50 and T90'' (operative August 20, 2001); 2262.4, ''Compliance With the CaRFG Phase 2 and CaRFG Phase 3 Standards for Reid Vapor Pressure'' (operative December 24, 2002); 2262.5, ''Compliance With the Standards for Oxygen Content'' (operative December 24, 2002); 2262.6, ''Prohibition of MTBE and Oxygenates Other Than Ethanol in California Gasoline Starting December 31, 2003'' (operative May 1, 2003); 2262.9, ''Requirements Regarding Denatured Ethanol Intended For Use as a Blend Component in California Gasoline'' (operative December 24, 2002); 2263, ''Sampling Procedures and Test Methods'' (operative May 1, 2003); 2263.7, ''Multiple Notification Requirements'' (operative September 2, 2000); 2264, ''Designated Alternative Limits'' (operative August 20, 2001); 2264.2, ''Election of Applicable Limit for Gasoline Supplied From a Production or Import Facility'' (operative September 2, 2000); 2265, ''Gasoline Subject to PM Alternative Specifications Based on the California Predictive Model'' (operative December 24, 2002); 2266, ''Certified Gasoline Formulations Resulting in Equivalent Emission Reductions Based on Motor Vehicle Emissions Testing'' (operative August 20, 2001); 2266.5, ''Requirements Pertaining to California Reformulated Gasoline Blendstock for Oxygen Blending (CARBOB) and Downstream Blending'' (operative May 1, 2003); 2267, ''Exemptions for Gasoline Used in Test Programs'' (operative September 2, 2000); 2268, ''Liability of Persons Who Commit Violations Involving Gasoline That Has Not Yet Been Sold or Supplied to a Motor Vehicle'' (operative September 2, 2000); 2269, ''Submittal of Compliance Plans'' (operative December 24, 2002); 2270, ''Testing and Recordkeeping'' (operative December 24, 2002); 2271, ''Variances'' (operative December 24, 2002); 2272, ''CaRFG Phase 3 Standards for Qualifying Small Refiners'' (operative May 1, 2003); 2273, ''Labeling of Equipment Dispensing Gasoline Containing MTBE'' (operative May 1, 2003); 2273.5, ''Documentation Provided with Delivery of Gasoline to Retail Outlets'' (operative May 1, 2003).

(*2*) ''California Procedures for Evaluating Alternative Specifications for Phase 2 Reformulated Gasoline Using the California Predictive Model,'' as last amended December 11, 1998.

(*3*) ''California Procedures for Evaluating Alternative Specifications for Phase 3 Reformulated Gasoline Using the California Predictive Model,'' as last amended April 25, 2001.

(*4*) ''California Procedures for Evaluating Alternative Specifications for Gasoline Using Vehicle Emissions Testing,'' as last amended April 25, 2001.

(*5*) ''Procedures for Using the California Model for California Reformulated Gasoline Blendstocks for Oxygenate Blending (CARBOB),'' as adopted April 25, 2001.

(ii) *Additional material.* (A) California Air Resources Board.

(*1*) Executive Order G–125–320, dated June 15, 2004, adopting the 2004 RFG Revision.

(*2*) The following additional material is available for inspection at EPA Region 9. To inspect this material, please contact EPA Region 9, 75 Hawthorne Street, San Francisco, California, 94105, Chief of Air Planning, (415) 947–8021.

(*i*) Standard Test Method for Determination of Ethanol Content of Denatured Fuel Ethanol by Gas Chromatography, Designation: D 5501–94 (1998); Standard Test Method for Gum Content in Fuels by Jet Evaporation, Designation: D 381–00; Standard Test Method for Water Using Volumetric Karl Fischer Titration, Designation: E 203–96; Standard Test Method for Water in Organic Liquids by Coulometric Karl Fischer Titration, Designation: E 1064–00; Standard Test Methods for Chloride Ion In Water, Designation: D 512–89 (1999); Standard Test Methods for Copper in Water, Designation: D 1688–95; Standard Test Method for Acidity in

Volatile Solvents and Chemical Intermediates Used in Paint, Varnish, Lacquer, and Related Products, Designation: D 1613–96 (1999); Standard Test Method for Determination of pHe of Ethanol, Denatured Fuel Ethanol, and Fuel Ethanol (Ed75–Ed85), Designation: D 6423–99.

(*ii*) Standard Test Method for Determination of Total Sulfur in Light Hydrocarbons, Motor Fuels and Oils by Ultraviolet Fluorescence, Designation: D 5453–93.

(*iii*) Standard Test Method for Determination of MTBE, ETBE, TAME, DIPE, *tertiary*-Amyl Alcohol and C1 to C4 Alcohols in Gasoline by Gas Chromatography, Designation: D 4815–99; Standard Test Method for Distillation of Petroleum Products at Atmospheric Pressure, Designation: D 86–99a; Standard Test Method for Determination of Olefin Content of Gasolines by Supercritical-Fluid Chromatography, Designation: D 6550–00.

(375) The following revisions to the California Reformulated Gasoline Regulations were submitted on February 3, 2009 (2009 RFG Revision), by the Governor's Designee.

(i) *Incorporation by reference.* (A) California Air Resources Board.

(*1*) Title 13, California Code of Regulations, Division 3 (Air Resources Board), Chapter 5 (Standards for Motor Vehicle Fuels), Article 1 (Standards for Gasoline), Subarticle 2 (Standards for Gasoline Sold Beginning March 1, 1996), sections 2260, ''Definitions'' (operative August 29, 2008); 2261, ''Applicability of Standards; Additional Standards'' (operative August 29, 2008); 2262, ''The California Reformulated Gasoline Phase 2 and Phase 3 Standards'' (operative August 29, 2008); 2262.3, ''Compliance With the CaRFG Phase 2 and CaRFG Phase 3 Standards for Sulfur, Benzene, Aromatic Hydrocarbons, Olefins, T50 and T90'' (operative August 29, 2008); 2262.4, ''Compliance With the CaRFG Phase 2 and CaRFG Phase 3 Standards for Reid Vapor Pressure'' (operative August 29, 2008); 2262.5, ''Compliance With the Standards for Oxygen Content'' (operative August 29, 2008); 2262.6, ''Prohibition of MTBE and Oxygenates Other Than Ethanol in California Gasoline Starting December 31, 2003'' (operative April 9, 2005); 2262.9, ''Requirements Regarding Denatured Ethanol Intended For Use as a Blend Component in California Gasoline'' (operative August 29, 2008); 2263, ''Sampling Procedures and Test Methods'' (operative August 29, 2008); 2263.7, ''Multiple Notification Requirements'' (operative August 29, 2008); 2264, ''Designated Alternative Limits'' (operative August 20, 2001); 2264.2, ''Election of Applicable Limit for Gasoline Supplied From a Production or Import Facility'' (operative August 29, 2008); 2265, ''Gasoline Subject to PM Alternative Specifications Based on the California Predictive Model'' (operative August 29, 2008); 2265.1, ''Offsetting Emissions Associated with Higher Sulfur Levels'' (operative August 29, 2008); 2265.5, ''Alternative Emission Reduction Plan (AERP)'' (operative August 29, 2008); 2266, ''Certified Gasoline Formulations Resulting in Equivalent Emission Reductions Based on Motor Vehicle Emissions Testing'' (operative August 29, 2008); 2266.5, ''Requirements Pertaining to California Reformulated Gasoline Blendstock for Oxygen Blending (CARBOB) and Downstream Blending'' (operative August 29, 2008); 2270, ''Testing and Recordkeeping'' (operative August 29, 2008); 2271, ''Variances'' (operative August 29, 2008); 2273, ''Labeling of Equipment Dispensing Gasoline Containing MTBE'' (operative August 29, 2008).

(*2*) ''California Procedures for Evaluating Alternative Specifications for Phase 3 Reformulated Gasoline Using the California Predictive Model,'' as last amended August 7, 2008.

(*3*) ''Procedures for Using the California Model for California Reformulated Gasoline Blendstocks for Oxygenate Blending (CARBOB),'' as last amended August 7, 2008.

(ii) *Additional material.* (A) California Air Resources Board.

(*1*) Executive Order S–09–001, dated February 3, 2009, adopting the 2009 RFG Revision.

(376) The following revisions to the California Diesel Fuel Regulations were submitted on February 3, 2009 (2009 Diesel Fuels Revision), by the Governor's Designee.

(i) *Incorporation by reference.* (A) California Air Resources Board.

(*1*) Title 13, California Code of Regulations, Division 3 (Air Resources Board), Chapter 1 (Motor Vehicle Pollution Control Devices), Article 1 (General Provisions), sections 1956.8, ''Exhaust Emissions Standards and Test Procedures—1985 and Subsequent Model Heavy-Duty Engines and Vehicles'' (operative December 31, 2008); 1960.1, ''Exhaust Emissions Standards and Test Procedures—1981 through 2006 Model Passenger Cars, Light-Duty and Medium-Duty Vehicles'' (operative March 26, 2004); 1961, ''Exhaust Emissions Standards and Test Procedures—2004 and Subsequent Model Passenger Cars, Light-Duty and Medium-Duty Vehicles'' (operative June 16, 2008); Chapter 5 (Standards for Motor Vehicle Fuels), Article 2 (Standards for Diesel Fuel), sections 2281, ''Sulfur Content of Diesel Fuel'' (operative August 4, 2005); 2282, ''Aromatic Hydrocarbon Content of Diesel Fuel'' (operative August 4, 2005); 2284, ''Lubricity of Diesel Fuel'' (operative August 4, 2005); 2285, ''Exemption from Diesel Fuel Requirements for Military-Specification Fuels Used in Qualifying Military Vehicles'' (operative August 14, 2004); Chapter 14 (Verification Procedure, Warranty and In-Use Compliance Requirements for In-Use Strategies to Control Emissions from Diesel Engines), section 2701, ''Definitions'' (operative January 1, 2005).

(*2*) Title 17, California Code of Regulations, Division 3 (Air Resources), Chapter 1 (Air Resources Board), Subchapter 7.5 (Airborne Toxic Control Measures), section 93114, ''Airborne Toxic Control Measure To Reduce Particulate Emissions from Diesel-Fueled Engines—Standards for Nonvehicular Diesel Fuel'' (operative August 14, 2004).

(ii) *Additional material.* (A) California Air Resources Board.

(*1*) Executive Order S–09–001, dated February 3, 2009, adopting the 2009 Diesel Fuels Revision.

(377) New and amended regulations were submitted on September 15, 2009.

(i) *Incorporation by Reference.* (A) Sacramento Metropolitan Air Quality Management District.

(*1*) Rule 452, ''Can Coating,'' Rule 454, ''Degreasing Operations,'' Rule 463, ''Wood Products Coatings,'' adopted September 25, 2008.

(*2*) Rule 466, ''Solvent Cleaning,'' adopted on May 23, 2002.

(*3*) Rule 456, ''Aerospace Assembly and Component Coating Operations,'' amended on October 23, 2008.

(*4*) Rule 465, ''Polyester Resin Operations,'' amended on September 25, 2008.

(*5*) Rule 464, ''Organic Chemical Manufacturing Operations,'' adopted on September 25, 2008.

(B) Yolo Solano Air Quality Management District.

(*1*) Rule 2.37, ''Natural Gas-Fired Water Heaters and Small Boilers,'' revised on April 8, 2009.

(*2*) Rule 2.42, ''Nitric Acid Production,'' adopted on May 13, 2009.

(C) Ventura County Air Pollution Control District.

(*1*) Rule 70, ''Storage and Transfer of Gasoline,'' adopted on March 10, 2009.

(378) New and amended regulations were submitted on January 10, 2010 by the Governor's designee.

(i) *Incorporation by Reference.* (A) South Coast Air Quality Management District.

(*1*) Rule 1173, ''Control of Volatile Organic Compound Leaks and Releases from Components at Petroleum Facilities and Chemical Plants,'' amended on February 6, 2009.

(*2*) Rule 1132, ''Further Control of VOC Emissions From High-Emitting Spray Booth Facilities,'' amended on May 5, 2006.

(*3*) Rule 1148.1, ''Oil and Gas Production Wells,'' adopted on March 5, 2004.

(B) Placer County Air Pollution Control District.

(*1*) Rule 245, ''Surface Coating of Metal Parts and Products,'' amended on August 20, 2009.

(C) Ventura County Air Pollution Control District.

(*1*) Rule 74.12, ''Surface Coating of Metal Parts and Products,'' adopted on April 8, 2008.

(*2*) Rule74.29, ''Soil Decontamination Operations,'' adopted on April 8, 2008.

(D) San Joaquin Valley Air Pollution Control District

(*1*) Rule 4311, ''Flares,'' amended on June 18, 2009.

(E) Feather River Air Quality Management District.

(*1*) Rule 3.22, ''Internal Combustion Engines,'' adopted on June 01, 2009.

(379) New and amended regulations for the following APCDs were submitted on May 17, 2010 by the Governor's designee.

(i) *Incorporation by Reference.* (A) South Coast Air Quality Management District.

(*1*) Rule 1144, ''Vanishing Oils and Rust Inhibitors,'' adopted on March 6, 2009.

(*2*) Rule 1145, ''Plastic, Rubber, Leather, and Glass Coatings,'' amended on December 4, 2009.

(*3*) Rule 1111, ''Reduction of NO_X Emissions from Natural Gas-Fired, Fan-Type Central Furnaces,'' amended on November 6, 2009.

(*4*) Rule 1147, ''NO_X Reductions from Miscellaneous Sources,'' adopted on December 5, 2008.

(*5*) Rule 1157, ''PM_{10} Emission Reductions from Aggregate and Related Operations,'' adopted on September 6, 2006.

(*6*) Previously approved on August 4, 2010 in paragraph (c)(379)(i)(A)(*3*) of this section and now deleted with replacement in paragraph (c)(461)(i)(C)(*2*), Rule 1111, ''Reduction of NO_X Emissions from Natural-Gas-Fired Fan-Type Central Furnaces,'' amended on November 6, 2009.

(*7*) Previously approved on August 4, 2010 in paragraph (c)(379)(i)(A)(*4*) of this section and now deleted with replacement in paragraph (c)(428)(i)(D)(*2*), Rule 1147, ''NO_X Reductions from Miscellaneous Sources,'' adopted on December 5, 2008.

(B) San Diego County Air Pollution Control District.

(*1*) Rule 2, ''Definitions,'' Rev. Adopted and Effective on June 30, 1999, Table 1—Exempt Compounds: Rev. and Effective on November 4, 2009.

(*2*) Previously approved on September 17, 2010 in paragraph (c)(379)(i)(B)(*1*) of this section and now deleted with replacement in paragraph (c)(488)(i)(A)(*1*), Rule 2, ''Definitions,'' Rev. Adopted and Effective on June 30, 1999, Table 1—Exempt Compounds: Rev. and Effective on November 4, 2009.

(C) San Joaquin Valley Unified Air Pollution Control District.

(*1*) Rule 4308, ''Boilers, Steam Generators and Process Heaters —0.075 MMBtu/hr to less than 2.0 MMbtu/hr,'' adopted on December 17, 2009.

(*2*) Rule 4695, ''Brandy Aging and Wine Aging Operations'' adopted on September 17, 2010.

(*3*) Rule 4602, ''Motor Vehicle Assembly Coatings,'' amended on September 17, 2009.

(*4*) Rule 4603, ''Surface Coating of Metal Parts and Products, Plastic Parts and Products and Pleasure Crafts,'' amended on September 17, 2009.

(*5*) Rule 4692, ''Commercial Charbroiling,'' amended on September 17, 2009.

(*6*) Rule 4601, ''Architectural Coatings'', amended on December 17, 2009.

(*7*) Rule 9410, ''Employer Based Trip Reduction,'' adopted on December 17, 2009.

(D) Placer County Air Pollution Control District

(*1*) Rule 233, ''Biomass Boilers,'' amended on December 10, 2009.

(E) Mojave Desert Air Quality Management District.

(*1*) Rule 1159, ''Stationary Gas Turbines,'' amended on September 28, 2009.

(380) The following plan was submitted on July 14, 2010, by the Governor's Designee.

(i) *Incorporation by reference.* (A) Great Basin Unified Air Pollution Control District.

(*1*) ''Board Order #080128–01 Requiring the City of Los Angeles to Undertake Measures to Control PM–10 Emissions from the Dried Bed of Owens Lake,'' including Attachments A–D, adopted February 1, 2008, and included as Appendix C to the ''2010 PM–10 Maintenance Plan and Redesignation Request for the Coso Junction Planning Area,'' adopted May 17, 2010.

(ii) *Additional materials.* (A) Great Basin Unified Air Pollution Control District (GBUAPCD).

(*1*) Non-regulatory portions of ''The 2010 PM–10 Maintenance Plan and Redesignation Request for the Coso Junction Planning Area'' (the 2010 Plan), including Appendices A, B, and D, adopted May 17, 2010.

(*2*) Letter dated June 10, 2010 from Theodore D. Schade, GBUAPCD, to

Deborah Jordan, United States Environmental Protection Agency Region 9, regarding Coso Junction PM–10 Contingency Measures.

(*3*) GBUAPCD Board Resolution 2010–01, dated May 17, 2010, adopting the 2010 Plan.

(B) California Air Resources Board (CARB).

(*1*) CARB Resolution 10–25, dated June 24, 2010, adopting the 2010 Plan.

(381) New and amended regulations were submitted on July 20, 2010, by the Governor's designee.

(i) *Incorporation by reference.* (A) Imperial County Air Pollution Control District.

(*1*) Rule 101, ''Definitions,'' adopted on February 23, 2010.

(*2*) Rule 424, ''Architectural Coatings,'' amended on February 23, 2010.

(*3*) Rule 425, ''Aerospace Coating Operations,'' revised February 23, 2010.

(*4*) Rule 427, ''Automotive Refinishing Operations,'' revised February 23, 2010.

(*5*) Rule 400.1, ''Stationary Gas Turbine(s)—Reasonably Available Control Technology (RACT),'' adopted on February 23, 2010.

(*6*) Rule 116, ''Emissions Statement and Certification,'' adopted on February 23, 2010.

(*7*) Rule 400.2, ''Boilers, Process Heaters and Steam Generators,'' adopted on February 23, 2010.

(B) Kern County Air Pollution Control District.

(*1*) Rule 102, ''Definitions,'' adopted on March 11, 2010.

(*2*) Rule 410.1A, ''Architectural Coatings,'' adopted on March 11, 2010. Effective as of 1/1/2011.

(C) Ventura County Air Pollution Control District.

(*1*) Rule 2, ''Definitions'', ''Exempt Organic Compounds,'' revised on January 12, 2010.

(*2*) Rule 74.2, ''Architectural Coatings,'' amended on January 12, 2010.

(D) Northern Sierra Air Quality Management District

(*1*) Rule 215, ''Phase II Vapor Recovery System Requirements,'' amended on February 22, 2010.

(E) Placer County Air Pollution Control District.

(*1*) Rule 502, ''New Source Review,'' as adopted on February 11, 2010.

(F) Feather River Air Quality Management District.

(*1*) Rule 10.1, ''New Source Review,'' as amended on October 5, 2009, except section C, as adopted on February 8, 1993.

(G) Antelope Valley Air Quality Management District.

(*1*) Rule 1134, ''Stationary Gas Turbines,'' amended on January 19, 2010.

(*2*) Rule 109, ''Recordkeeping for Volatile Organic Compound Emissions,'' amended April 20, 2010.

(*3*) Rule 403, ''Fugitive Dust,'' amended on April 20, 2010.

(H) Mojave Desert Air Quality Management District

(*1*) Rule 1117, ''Graphic Arts and Paper, Film, Foil and Fabric Coatings,'' amended September 28, 2009.

(I) Yolo-Solano Air Quality Management District.

(*1*) Rule 2.3, ''Ringelmann Chart,'' revised on January 13, 2010.

(*2*) Rule 2.11, ''Particulate Matter Concentration,'' revised on January 13, 2010.

(*3*) Rule 2.12, ''Specific Contaminants,'' revised on January 13, 2010.

(J) San Diego Air Pollution Control District.

(*1*) Rule 66.1, ''Miscellaneous Surface Coating Operations and Other Processes Emitting Volatile Organic Compounds,'' adopted on February 24, 2010.

(K) South Coast Air Quality Management District.

(*1*) Rule 1112.1, ''Emissions of Particulate Matter and Carbon Monoxide from Cement Kilns,'' amended on December 4, 2009.

(382) New and amended regulations for the following APCDs were submitted on July 11, 2007, by the Governor's designee.

(i) *Incorporation by reference.* (A) Sacramento Metropolitan Air Quality Management District.

(*1*) Permit to Operate for the Kiefer Landfill (''Permit to Operate No. 17359 (Rev01)''), as revised on November 13, 2006.

(ii) *Additional materials.* (A) El Dorado County Air Quality Management District.

(*1*) El Dorado County Air Quality Management District Reasonably Available Control Technology (RACT)

State Implementation Plan (SIP) Update Analysis Staff Report (''2006 RACT SIP'') adopted on February 6, 2007.

(B) Feather River Air Quality Management District.

(*1*) 2006 Reasonably Available Control Technology (RACT) Analysis for State Implementation Plan (SIP) (''2006 RACT SIP'') as adopted on December 4, 2006.

(C) Sacramento Metropolitan Air Quality Management District.

(*1*) Reasonably Available Control Technology (RACT) as Applicable to the 8-Hour Ozone Standard, dated October 26, 2006, as adopted October 26, 2006, excluding the RACT determinations for:

(*i*) Pharmaceutical Products Manufacturing Source Category; and

(*ii*) Kiefer Landfill (RACT for volatile organic compounds).

(D) Placer County Air Pollution Control District.

(*1*) 2006 Reasonably Available Control Technology State Implementation Plan Update Analysis, as adopted on August 10, 2006.

(E) Mojave Desert Air Quality Management District.

(*1*) 8-Hour Reasonably Available Control Technology—State Implementation Plan Analysis (RACT SIP Analysis), August 2006, adopted on January 22, 2007.

(383) New and amended regulations were submitted on February 16, 2010, by the Governor's designee.

(i) *Incorporation by Reference.* (A) California Air Resources Board.

(*1*) Executive Order R–08–016, dated May 5, 2009.

(*2*) ''Final Regulation Order, Regulation for Reducing Emissions from Consumer Products,'' California Code of Regulations, Title 17 (Public Health), Division 3 (Air Resources), Chapter 1 (Air Resources Board), Subchapter 8.5 (Consumer Products), Article 2 (Consumer Products), amendment filed 6–18–2009, operative 7–18–2009.

(384) New and amended regulations for the following APCD's were submitted on September 10, 2010 by the Governor's designee.

(i) *Incorporation by Reference.* (A) South Coast Air Quality Management District

(*1*) Resolution No. 10–20, dated July 9, 2010.

(*2*) ''Revision to the State Implementation Plan for the South Coast Air Quality Management District, State of California: Sulfur Oxides and Particulate Matter Offset Requirements for the Proposed CPV Sentinel Power Plant to be Located in Desert Hot Springs, California, Including AB 1318 Offset Tracking System'', which is incorporated by reference in Resolution No. 10–20, dated July 9, 2010.

(*3*) ''CPV Sentinel Energy Project AB 1318 Tracking System'', which is incorporated by reference in Resolution No. 10–20, dated July 9, 2010.

(385) New and amended regulations for the following APCDs were submitted on February 28, 2011.

(i) *Incorporation by Reference.* (A) [Reserved]

(B) Northern Sonoma County Air Pollution Control District.

(*1*) Rule 130, ''Definitions,'' amended December 14, 2010.

(*2*) Previously approved on May 6, 2011 in paragraph (c)(385)(i)(B)(1) of this section and now deleted with replacement in paragraph (c)(480)(i)(A)(*1*) of this section, Rule 130, ''Definitions,'' amended December 14, 2010.

(386) The following plan was submitted on November 16, 2007, by the Governor's Designee.

(i) [Reserved]

(ii) *Additional materials.* (A) California Air Resources Board (CARB).

(*1*) CARB Resolution 07–28, dated September 27, 2007, adopting the ''2007 State Implementation Plan for the 1997 ozone and $PM_{2.5}$ National Ambient Air Quality Standards'' (''2007 State Strategy'').

(*2*) ''Interstate Transport State Implementation Plan (SIP) for the 1997 8-hour Ozone Standard and $PM_{2.5}$ to satisfy the Requirements of Clean Air Act section 110(a)(2)(D)(i) for the State of California (September 21, 2007),'' as modified by Attachment A and submitted as Appendix C to the 2007 State Strategy (''2007 Transport SIP''), at page 5 (''Evaluation of Interference with Other States' Measures Required to Meet Regional Haze and Visibility SIP Requirements'').

(*3*) 2007 Transport SIP at pages 19–20 (Attachment A) (''Evaluation of Significant Contribution to Nonattainment or Interference with Maintenance of Attainment Standards in Another State'').

(*4*) 2007 Transport SIP at pages 21–22 (Attachment A) (''Evaluation of interference with Prevention of Significant Deterioration Measures of any other State'').

(*5*) ''110(a)(2) Infrastructure SIP,'' submitted as Appendix B to the 2007 State Strategy, and ''Legal Authority and Other Requirements,'' submitted as Appendix G to the 2007 State Strategy (collectively, ''2007 Infrastructure SIP'').

(387) The following plan was submitted on March 16, 2009, by the Governor's Designee.

(i) [Reserved]

(ii) *Additional materials.* (A) California Air Resources Board (CARB).

(1) CARB Resolution 09–4, dated January 22, 2009, adopting the ''California Regional Haze Plan''.

(2) The ''California Regional Haze Plan'', adopted on January 22, 2009, as amended and supplemented on September 8, 2009 in a ''letter from James N. Goldstene, CARB to Laura Yoshii, United States Environmental Protection Agency'', and as amended and supplemented on June 9, 2010 in a ''letter from James N. Goldstene, CARB to Jared Blumenfeld, United States Environmental Protection Agency''.

(388) New and amended regulations for the following APCD were submitted on April 5, 2011 by the Governor's Designee.

(i) *Incorporation by reference.* (A) South Coast Air Quality Management District—SCAQMD)

(*1*) Rule 1143, ''Consumer Paint Thinners & Multi-purpose Solvents,'' adopted on March 6, 2009 and amended December 3, 2010.

(*2*) Rule 1144, ''Metal Working Fluids and Direct-Contact Lubricants,'' adopted on March 6, 2009, and amended July 9, 2010.

(*3*) Rule 1175, ''Control of Emissions from the Manufacture of Polymeric Cellular (Foam) Products,'' amended November 5, 2010.

(*4*) Rule 2002, ''Allocations for Oxides of Nitrogen (NO_X) and Oxides of Sulfur (SO_X),'' amended November 5, 2010.

(*5*) Rule 1171, ''Solvent Cleaning Operations,'' amended February 1, 2008.

(*6*) Previously approved on August 12, 2011 in paragraph (c)(388)(i)(A)(*4*) of this section and now deleted with replacement in (c)(491)(i)(A)(*2*), Rule 2002, ''Allocations for NO_X & SO_X,'' amended on October 7, 2016.

(B) San Joaquin Valley Air Pollution Control District.

(*1*) Rule 4354, ''Glass Melting Furnaces,'' amended on September 16, 2010.

(*2*) Rule 4103, ''Open Burning,'' amended on April 15, 2010, not effective until June 1, 2010.

(*3*) Table 9–1, Revised Proposed Staff Report and Recommendations on Agricultural Burning, approved on May 20, 2010.

(*4*) San Joaquin Valley Air Pollution Control District, Resolution No. 10–05–22, adopted on May 20, 2010.

(*5*) California Air Resources Board, Resolution 10–24, adopted on May 27, 2010.

(*6*) Rule 4570, ''Confined Animal Facilities,'' amended on October 21, 2010.

(*7*) Rule 4612, ''Motor Vehicle and Mobile Equipment Coating,'' amended on October 21, 2010.

(*8*) Rule 4653, ''Adhesives and Sealants,'' amended on September 16, 2010.

(C) Santa Barbara County Air Pollution Control District.

(*1*) Rule 321, ''Solvent Cleaning Machines and Solvent Cleaning,'' revised September 20, 2010.

(D) Sacramento Metropolitan Air Quality Management District.

(*1*) Rule 466, ''Solvent Cleaning,'' amended October 28, 2010.

(*2*) Rule 414, ''Water Heaters, Boilers and Process Heaters Rated Less Than 1,000,000 BTU per hour,'' amended on March 25, 2010.

(*3*) Rule 451, ''Surface Coating of Miscellaneous Metal Parts and Products,'' amended October 28, 2010.

(*4*) Rule 448, ''Gasoline Transfer into Stationary Storage Containers,'' amended on February 26, 2009.

(*5*) Rule 449, ''Transfer of Gasoline into Vehicle Fuel Tanks,'' amended on February 26, 2009.

(E) Placer County Air Pollution Control District.

(*1*) Rule 236, ''Wood Products and Coating Operations,'' amended October 14, 2010, effective July 1, 2011.

(*2*) Rule 238, ''Factory Coating of Flat Wood Paneling,'' amended October 14, 2010, effective July 1, 2011.

(*3*) Rule 218, ''Architectural Coatings,'' amended October 14, 2010.

(*4*) Rule 234, ''Automotive Refinishing Operations,'' adopted November 3, 1994 and amended October 14, 2010, effective July 1, 2011.

(F) Mojave Desert Air Quality Management District.

(*1*) Rule 1116, ''Automotive Refinishing Operations,'' amended on August 23, 2010.

(G) Lake County Air Quality Management District.

(*1*) Lake County Air Quality Management District Board of Directors Resolution 2010–174 adopting Section 470, ''Air Toxics Control Measure for Emissions of Toxic Particulate Matter from In-Use Agricultural Compression Ignition Engines,'' adopted on September 21, 2010, as ''Exhibit A.''

(H) Yolo-Solano Air Quality Management District.

(*1*) Rule 2.43, ''Biomass Boilers,'' adopted on November 10, 2010.

(389) New and amended regulations were submitted on December 7, 2010, by the Governor's Designee.

(i) *Incorporation by Reference.* (A) Sacramento Metropolitan Air Quality Management District.

(*1*) Rule 214, ''Federal New Source Review,'' as adopted on October 28, 2010.

(B)(*1*) [Reserved]

(*2*) Rule 242, ''Stationary Internal Combustion Engines,'' adopted on April 10, 2003.

(*3*) Rule 246, ''Natural Gas-Fired Water Heaters,'' adopted on June 19, 1997.

(*4*) Rule 503, ''Emission Statement,'' amended on August 12, 2010.

(390) Amended regulations were submitted on January 28, 2011, by the Governor's Designee.

(i) *Incorporation by Reference.* (A) Sacramento Metropolitan Air Quality Management District.

(*1*) Rule 203, ''Prevention of Significant Deterioration,'' as amended on January 27, 2011.

(B) Placer County Air Pollution Control.

(*1*) Rule 243, ''Polyester Resin Operations,'' adopted on April 10, 2003.

(391) New and amended regulations were submitted on June 21, 2011 by the Governor's designee. Final approval of these regulations is based, in part, on the clarifications contained in letters dated July 6, 2012 and August 20, 2012 from the Placer County Air Pollution Control District regarding specific implementation of parts of the Prevention of Significant Deterioration program.

(i) *Incorporation by reference.* (A) Eastern Kern Air Pollution Control District.

(*1*) Rule 102, ''Definitions,'' amended on January 13, 2011.

(*2*) Rule 202, ''Permit Exemptions,'' amended on January 13, 2011.

(B) Santa Barbara County Air Pollution Control District.

(*1*) Rule 102, ''Definitions,'' revised on January 20, 2011.

(C) Placer County Air Pollution Control District.

(*1*) Rule 518, ''Prevention of Significant Deterioration (PSD) Permit Program,'' adopted on February 10, 2011.

(ii) *Additional materials.* (A) Placer County Air Pollution Control District (PCAPCD).

(*1*) Letter dated July 6, 2012 from Thomas J. Christofk, PCAPCD, to Gerardo Rios, United States Environmental Protection Agency Region 9, regarding Clarifications of District Rule 518 and 40 CFR 51.166.

(*2*) Letter dated August 20, 2012 from Thomas Christofk, PCAPCD, to Gerardo Rios, United States Environmental Protection Agency Region 9, regarding Clarifications of District Rule 518 and 40 CFR 52.21(k)(2).

(392) A plan was submitted on June 30, 2008 by the Governor's designee.

(i) [Reserved]

(ii) *Additional Material.* (A) San Joaquin Valley Unified Air Pollution Control District.

(*1*) 2008 $PM_{2.5}$ Plan, adopted on April 30, 2008.

(*2*) SJVUAPCD Governing Board, In the Matter of: Adopting the San Joaquin Valley Unified Air Pollution Control District 2008 $PM_{2.5}$ Plan, Resolution No. 08–04–10, April 30, 2008. Commitments to achieve emissions reductions (including emissions reductions of 8.97 tpd of NO_X, 6.7 tpd of direct $PM_{2.5}$, and 0.92 tpd of SOx by 2014) as described in Table 6–3a (p. 6–11), Table 6–3b (p. 6–12), and Table 6–3c (p. 6–12) respectively of the 2008 $PM_{2.5}$ Plan and commitments to adopt and submit control measures as described in Table 6–2 (p. 6–9) of the 2008 $PM_{2.5}$ Plan, as amended June 17, 2010.

(B) State of California Air Resources Board.

(*1*) CARB Resolution No. 08–28 with Attachment A, May 22, 2008.

(393) An amended plan was submitted on August 12, 2009 by the Governor's designee.

(i) [Reserved]

(ii) *Additional Material*. (A) State of California Air Resources Board.

(*1*) Status Report on the State Strategy for California's 2007 State Implementation Plan (SIP) and Proposed Revisions to the SIP Reflecting Implementation of the 2007 State Strategy, pages 11–17, April 24, 2009.

(*2*) CARB Resolution No. 09–34, April 24, 2009.

(394) An amended plan was submitted on September 15, 2010 by the Governor's designee.

(i) [Reserved]

(ii) *Additional Material*. (A) San Joaquin Valley Unified Air Pollution Control District.

(*1*) 2008 $PM_{2.5}$ Plan Amendment to Extend the Rule 4905 Amendment Schedule, June 17, 2010.

(*2*) SJVUAPCD Governing Board, In the Matter of: Proposed Amendments to the 2008 $PM_{2.5}$ Plan to Extend the Rule Amendment Schedule for Rule 4905 (Natural Gas-Fired, Fan-Type Residential Central Furnaces), Resolution 10–06–18, June 17, 2010.

(B) State of California Air Resources Board.

(1) Executive Order S–10–003, Relating to Approval of Amendments to the 2008 $PM_{2.5}$ Plan to Extend the Rule Amendment Schedule for Rule 4905 (Natural Gas-Fired, Fan-Type Residential Central Furnaces), September 15, 2010.

(395) An amended plan was submitted on May 18, 2011 by the Governor's designee.

(i) [Reserved]

(ii) *Additional Material*. (A) State of California Air Resources Board.

(*1*) Progress Report on Implementation of $PM_{2.5}$ State Implementation Plans (SIP) for the South Coast and San Joaquin Valley Air Basins and Proposed SIP Revisions, Release Date: March 29, 2011.

(*2*) CARB Resolution No. 11–24, April 28, 2011. Commitment to propose measures as described in Appendix B of the Progress Report on the Implementation of $PM_{2.5}$ State Implementation Plans (SIP) for the South Coast and San Joaquin Valley Air Basins and Proposed SIP Revisions.

(*3*) Executive Order S–11–010, ''Approval of Revisions to the Fine Particulate Matter State Implementation Plans for the South Coast Air Quality Management Plans for the South Coast Air Quality Management District and the San Joaquin Valley Air Pollution Control District,'' May 18, 2011.

(396) An amended plan was submitted on July 29, 2011 by the Governor's designee.

(i) [Reserved]

(ii) *Additional Material*. (A) State of California Air Resources Board.

(*1*) 8-Hour Ozone State Implementation Plan Revisions and Technical Revisions to the $PM_{2.5}$ State Implementation Plan Transportation Conformity Budgets for the South Coast and San Joaquin Valley Air Basins, Appendix A, page A–6, (dated June 20, 2011), adopted July 21, 2011.

(*i*) Commitment to develop and submit by 2020 revisions to the SIP that will: Reflect modifications to the 2023 emissions reduction target based on updated science and identify additional strategies and implementing agencies needed to achieve the needed reductions by 2023 as given in the 2011 Ozone SIP Revisions on page A–8.

(*2*) CARB Resolution No. 11–22, July 21, 2011.

(*i*) Commitment to develop, adopt and submit by 2020 contingency measures to be implemented if advanced technology measures do not achieve the planned reductions and attainment

contingency measures meeting the requirements of CAA 172(c)(9), pursuant to CAA section 182(e)(5) as given on page 4.

(*ii*) Commitment to update the air quality modeling in the SJV 2007 Ozone Plan to reflect the emissions inventory improvements and any other new information by December 31, 2014 or the date by which state implementation plans are due for the expected revision to the Federal 8-hour ozone standard whichever comes first, as provided on page 3.

(*iii*) Commitments to propose measures as provided in Appendix B, Table B–1 of the *Progress Report on the Implementation of $PM_{2.5}$ State Implementation Plans (SIP) for the South Coast and San Joaquin Valley Air Basins and Proposed SIP Revisions* (Release Date: March 29, 2011), adopted April 28, 2011, as amended by Appendix A, p. A–7 of the *8-Hour Ozone State Implementation Plan Revisions and Technical Revisions to the $PM_{2.5}$ State Implementation Plan Transportation Conformity Budgets for the South Coast and San Joaquin Valley Air Basins* (Release Date: June 20, 2011), adopted July 21, 2011.

(*3*) Executive Order S–11–016, ''Approval of Revisions to the 8-Hour Ozone State Implementation Plans for the South Coast Air Quality Management District and the San Joaquin Valley Air Pollution Control District,'' July 29, 2011.

(397) A plan was submitted on November 16, 2007 by the

Governor's designee.

(i) [Reserved]

(ii) *Additional Material.* (A) State of California Air Resources Board.

(*1*) Proposed State Strategy for California's 2007 State Implementation Plan, adopted on September 27, 2007.

(*2*) CARB Resolution No. 07–28 with Attachments A and B, September 27, 2007. Commitment to achieve the total emissions reductions necessary to attain the Federal standards in the South Coast air basin, which represent 6.1 tons per day (tpd) of direct $PM_{2.5}$, 38.1 tpd of SO_X, 33.6 tpd of VOC and 118.2 tpd of nitrogen oxides by 2014 for purposes of the 1997 $PM_{2.5}$ NAAQS, as described in Resolution No. 07–28 at Attachment B, pp. 3–5, and modified by CARB Resolution No. 09–34 (April 24, 2009) adopting the ''Status Report on the State Strategy for California's 2007 State Implementation Plan (SIP) and Proposed Revision to the SIP reflecting Implementation of the 2007 State Strategy,'' and by CARB Resolution 11–24 (April 28, 2011) adopting the ''Progress Report on Implementation of $PM_{2.5}$ State Implementation Plans (SIP) for the South Coast and San Joaquin Valley Air Basins and Proposed SIP Revisions.''.

(*3*) Executive Order S–07–002, Relating to Approval of the State Strategy for California's State Implementation Plan (SIP) for the Federal 8-Hour Ozone and $PM_{2.5}$ Standards, November 16, 2007.

(*4*) CARB Resolution No. 07–20 with Attachment A, June 14, 2007.

(*5*) CARB Resolution No. 07–28 with Attachments A and B, September 27, 2007. Commitment to achieve the total emissions reductions necessary to attain the Federal standards in the South Coast air basin, which represent 152 tpd of NO_X and 46 tpd of VOC by 2014, and 54 tpd of VOC and 141 tpd of nitrogen oxides by 2023 for purposes of the 1997 8-hour ozone NAAQS, as described in Resolution No. 07–28 at Attachment B, p. 4, and modified by CARB Resolution No. 09–34 (April 24, 2009) adopting the ''Status Report on the State Strategy for California's 2007 State Implementation Plan (SIP) and Proposed Revision to the SIP reflecting Implementation of the 2007 State Strategy.''

(B) San Joaquin Valley Unified Air Pollution Control District.

(*1*) 2007 Ozone Plan, adopted on April 30, 2007.

(*2*) SJVUAPCD Governing Board, In the Matter of: Adopting the San Joaquin Valley Unified Air Pollution Control District 2007 Ozone Plan, Resolution No. 07–04–11a, April 30, 2007. Commitments to achieve emissions reductions as described in Table 6–1 of the 2007 Ozone Plan, as amended December 18, 2008.

(398) A plan was submitted on November 28, 2007 by the Governor's designee.

(i) [Reserved]

(ii) *Additional Material.* (A) South Coast Air Quality Management District.

(*1*) Final South Coast 2007 Air Quality Management Plan (excluding those portions of Chapter 4 (''AQMP Control Strategy'') and Chapter 7 (''Implementation'') addressing District-recommended measures for adoption by CARB and references to those measures (pp. 4–43 through 4–54 and the section titled ''Recommended Mobile Source and Clean Fuel Control Measures'' in table 7–3, pp. 7–8 and 7–9); those portions of Chapter 6 (''Clean Air Act Requirements'') and Chapter 7 (''Implementation'') addressing California Clean Air Act Requirements (pp. 6–13 through 6–22 and page 7–3); those portions of Chapter 4 (''AQMP Control Strategy'') addressing emission and risk reduction goals identified in the AQMP's proposed control measure MOB–03 (''Proposed Backstop Measures for Indirect Sources of Emissions from Ports and Port-Related Facilities'') (p. 4–24); the motor vehicle emissions budgets in Chapter 6 (''Clean Air Act Requirements'') (pp. 6–24 through 6–26), and Chapter 8 (''Future Air Quality—Desert Nonattainment Areas'')), adopted on June 1, 2007.

(*2*) SCAQMD Governing Board Resolution 07–9, ''A Resolution of the Governing Board of the South Coast Air Quality Management District certifying the final Program Environmental Impact Report for the 2007 Air Quality Management Plan, adopting the Final 2007 Air Quality Management Plan (AQMP), to be referred to after adoption as the Final 2007 AQMP, and to fulfill USEPA Requirements for the use of emissions reductions form the Carl Moyer Program in the State Implementation Plan,'' June 1, 2007. Commitments to achieve emissions reductions (including emissions reductions of 2.9 tons per day (tpd) of direct $PM_{2.5}$, 2.9 tpd of SO_X, 10.4 tpd of VOC and 10.8 tpd of nitrogen oxides by 2014) as described by SCAQMD Governing Board Resolution No. 07–9, p. 10, June 1, 2007, and modified by SCAQMD Governing Board Resolution 11–9, p. 3, March 4, 2011, and commitments to adopt and submit control measures as described in Table 4–2A of the Final 2007 AQMP, as amended March 4, 2011.

(*3*) SCAQMD Governing Board Resolution 07–9, ''A Resolution of the Governing Board of the South Coast Air Quality Management District certifying the final Program Environmental Impact Report for the 2007 Air Quality Management Plan, adopting the Final 2007 Air Quality Management Plan (AQMP), to be referred to after adoption as the Final 2007 AQMP, and to fulfill USEPA Requirements for the use of emissions reductions form the Carl Moyer Program in the State Implementation Plan,'' June 1, 2007. Commitments to achieve emissions reductions (including emissions reductions of 19.3 tpd of VOC and 9.2 tpd of nitrogen oxides by 2023) as described by SCAQMD Governing Board Resolution No. 07–9, p. 10, June 1, 2007, and modified by SCAQMD Governing Board Resolution 11–9, p. 3, March 4, 2011, and commitments to adopt and submit control measures as described in Table 4–2A of the Final 2007 AQMP, as amended March 4, 2011.

(*4*) Final South Coast 2007 Air Quality Management Plan, Chapter 8 (''Future Air Quality—Desert Nonattainment Areas'') (excluding pp. 8–14 to 8–17 (regarding transportation conformity budgets)), adopted on June 1, 2007.a

(B) State of California Air Resources Board.

(*1*) CARB Resolution No. 07–41, September 27, 2007.

(399) An amended plan was submitted on May 18, 2011 by the Governor's designee.

(i) [Reserved]

(ii) *Additional Material*. (A) State of California Air Resources Board.

(*1*) Progress Report on Implementation of $PM_{2.5}$ State Implementation Plans (SIP) for the South Coast and San Joaquin Valley Air Basins and Proposed SIP Revisions, Appendices B and C. Release Date: March 29, 2011.

(*2*) CARB Resolution No. 11–24, April 28, 2011.

(*3*) Executive Order S–11–010, ''Approval of Revisions to the Fine Particulate Matter State Implementation Plans for the South Coast Air Quality Management Plans for the South Coast Air Quality Management District and the San Joaquin Valley Air Pollution Control District,'' May 18, 2011.

(400) An amended plan was submitted on May 19, 2011 by the Governor's designee.

(i) *Incorporation by reference.* (A) San Joaquin Valley Unified Air Pollution Control District.

(*1*) Rule 2201, ''New and Modified Stationary Source Review Rule,'' amended on April 21, 2011.

(ii) *Additional Material.* (A) South Coast Air Quality Management District.

(*1*) Revisions to the 2007 $PM_{2.5}$ and Ozone State Implementation Plan for South Coast Air Basin and Coachella Valley (SIP Revisions), adopted on March 4, 2011.

(*2*) SCAQMD Governing Board Resolution 11–9, ''A Resolution of the South Coast Air Quality Management District Governing Board (AQMD) certifying the Addendum to Final Program Environmental Impact Report (PEIR) for the 2007 Air Quality Management Plan, (AQMP), for a revision to the Final 2007 AQMP, to be referred to after adoption as the Revision to the Final 2007 AQMP,'' March 4, 2011.

(B) State of California Air Resources Board.

(*1*) CARB Resolution No. 11–24, April 28, 2011. Commitment to propose measures as described in Appendix B of the ''Progress Report on the Implementation of the $PM_{2.5}$ State Implementation Plans (SIP) for the South Coast and San Joaquin Valley Air Basins and Proposed SIP Revisions.''

(C) San Joaquin Valley Unified Air Pollution Control District.

(*1*) Letter from David Warner, Deputy Air Pollution Control Officer, San Joaquin Valley Unified Air Pollution Control District, to Gerardo C. Rios, Chief, Air Permits Office, EPA Region IX, dated June 26, 2014.

(401) An amended plan was submitted on July 29, 2011 by the

Governor's designee.

(i) [Reserved]

(ii) *Additional Material.* (A) State of California Air Resources Board.

(*1*) 8-Hour Ozone State Implementation Plan Revisions and Technical Revisions to the $PM_{2.5}$ State Implementation Plan Transportation Conformity Budgets for the South Coast and San Joaquin Valley Air Basins, Appendix A, page A–5 (dated June 20, 2011), adopted July 21, 2011.

(*i*) Commitment to develop and submit by 2020 revisions to the SIP that will reflect modifications to the 2023 emissions reduction target based on updated science, and identify additional strategies and implementing agencies needed to achieve the needed reductions by 2023 as given in the 2011 Ozone SIP Revision on page A–8.

(*2*) CARB Resolution No. 11–22, July 21, 2011.

(*i*) Commitment to develop, adopt and submit by 2020 contingency measures to be implemented if advanced technology measures do not achieve the planned emissions reductions, and attainment contingency measures meeting the requirements of CAA section 172(c)(9), pursuant to CAA section 182(e)(5) as given on p. 4.

(*ii*) Commitment to propose measures as provided in Appendix B Table B–1 of the *Progress Report on the Implementation of $PM_{2.5}$ State Implementation Plans (SIP) for the South Coast and San Joaquin Valley Air Basins and Proposed SIP Revisions* (Release Date: March 29, 2011), adopted April 28, 2011.

(*3*) Executive Order S–11–016, ''Approval of Revisions to the 8–Hour Ozone State Implementation Plans and Technical Revisions to the $PM_{2.5}$ State Implementation Plan Transportation Conformity Budgets for the South Coast San Joaquin Valley Air Basin,'' July 21, 2011.

(402) New and amended regulations were submitted on July 28, 2011 by the Governor's designee.

(i) *Incorporation by reference.* (A) San Joaquin Valley Unified Air Pollution Control District.

(*1*) Rule 4401, ''Steam-Enhanced Crude Oil Production Wells,'' adopted on June 16, 2011.

(*2*) Rule 4605, ''Aerospace Assembly and Component Coating Operations,'' amended on June 16, 2011.

(403) A new rule for the following APCD was submitted on March 2, 2011, by the Governor's designee.

(i) *Incorporation by reference.* (A) South Coast Air Quality Management District.

(*1*) Rule 1315, ''Federal New Source Review Tracking System,'' excluding paragraph (b)(2) and subdivisions (g) and (h), adopted on February 4, 2011.

(404) New and amended regulations for the following APCDs were submitted on September 27, 2011, by the Governor's Designee.

(i) *Incorporation by Reference.* (A) South Coast Air Quality Management District

(*1*) Rule 2005, ''New Source Review for RECLAIM,'' amended on June 3, 2011.

(*2*) Rule 1420.1, ''Emissions Standard For Lead From Large Lead-Acid Battery Recycling Facilities,'' adopted on November 5, 2010.

(*3*) Rule 1113, ''Architectural Coatings,'' amended on June 3, 2011.

(*4*) Rule 1150.1, ''Control of Gaseous Emissions from Municipal Solid Waste Landfills,'' amended on April 1, 2011.

(*5*) Previously approved on December 20, 2011 in paragraph (c)(404)(i)(A)(*1*) of this section and now deleted with replacement in (c)(491)(i)(A)(*3*), Rule 2005, ''New Source Review for Regional Clean Air Incentives Market,'' amended on December 4, 2015.

(B) Northern Sierra Air Quality Management District.

(*1*) Rule 228, ''Surface Coating of Metal Parts and Products,'' amended on April 25, 2011.

(*2*) Rule 214, ''Phase I Vapor Recovery Requirements,'' amended on April 25, 2011.

(C) Ventura County Air Pollution Control District.

(*1*) Rule 2, ''Definitions,'' adopted on October 22, 1968, as revised through April 12, 2011.

(*2*) Rule 74.19, ''Graphic Arts,'' revised on June 14, 2011.

(D) San Joaquin Valley Unified Air Pollution Control District.

(*1*) Rule 4354, ''Glass Melting Furnaces,'' amended on May 19, 2011.

(405) New and amended regulations for the following APCDs were submitted on August 26, 2011 by the Governor's designee.

(i) *Incorporation by reference.* (A) San Joaquin Valley Unified Air Pollution Control District.

(*1*) Rule 4684, ''Polyester Resin Operations,'' amended on August 18, 2011.

(406) New and amended regulations were submitted on January 28, 2011, by the Governor's designee.

(i) *Incorporation by Reference.* (A) California Air Resources Board.

(*1*) Submittal letter from Robert D. Fletcher (California Air Resources Board) to Jared Blumenfeld (Environmental Protection Agency), stating the submission does not include the second tier emission limits for Multi-purpose Solvent and Paint Thinner, dated January 28, 2011.

(*2*) Executive Order R–10–013, dated August 6, 2010.

(*3*) ''Final Regulation Order, Regulation for Reducing Emissions from Consumer Products,'' California Code of Regulations, Title 17 (Public Health), Division 3 (Air Resources), Chapter 1 (Air Resources Board), Subchapter 8.5 (Consumer Products), Article 2 (Consumer Products), adopted August 6, 2010, effective October 20, 2010.

(407) A plan was submitted on June 18, 2009 by the Governor's designee.

(i) [Reserved]

(ii) *Additional Material.* (A) San Joaquin Valley Air Pollution Control District.

(*1*) Reasonably Available Control Technology (RACT) Demonstration for Ozone State Implementation Plan (SIP), adopted April 16, 2009.

(408) An amended plan was submitted on April 24, 2009 by the Governor's designee.

(i) [Reserved]

(ii) *Additional Material.* (A) San Joaquin Valley Unified Air Pollution Control District.

(*1*) *Amendments to the 2007 Ozone Plan* (amending the rulemaking schedule for Measure S–GOV–5 Organic Waste Operations) adopted on December 18, 2008.

(*2*) SJVUAPCD Governing Board, In the Matter of: Proposed Amendment to the 2007 Ozone Plan to Extend the Rule Adoption Schedule for Organic Waste Operations, SJVUAPCD Governing Board Resolution No. 08–12–18. December 18, 2008.

(409) New regulation was submitted on December 9, 2011, by the Governor's designee.

(i) *Incorporation by reference.* (A) California Air Resources Board.

(*1*) State of California Office of Administrative Law, ''Notice of Approval of Regulatory Action,'' Title 13, California Code of Regulations (CCR), section 2027, effective on November 9, 2011.

(*2*) Final Regulation Order, 13 CCR section 2027 (''In-Use On-Road Diesel-Fueled Heavy-Duty Drayage Trucks'').

(410) New regulation was submitted on December 15, 2011, by the Governor's designee.

(i) *Incorporation by reference.* (A) California Air Resources Board.

(*1*) State of California Office of Administrative Law, ''Notice of Approval of Regulatory Action,'' Title 13, California Code of Regulations (CCR), section 2025, effective on December 14, 2011.

(*2*) Final Regulation Order, 13 CCR section 2025 (''Regulation to Reduce Emissions of Diesel Particulate Matter, Oxides of Nitrogen and Other Criteria Pollutants, from In-Use Heavy-Duty Diesel-Fueled Vehicles'').

(411) New and amended regulations for the following APCDs were submitted on February 23, 2012. Final approval of these regulations is based, in part, on the clarifications contained in letters dated July 10, 2012 and August 21, 2012 from the Imperial County Air Pollution Control District regarding specific implementation of parts of the Prevention of Significant Deterioration program.

(i) *Incorporation by reference.* (A) Sacramento Metropolitan Air Quality Management District.

(*1*) Rule 459, ''Automotive, Mobile Equipment, and Associated Parts and Components Coating Operations,'' amended August 25, 2011.

(*2*) Rule 101, ''General Provisions and Definitions,'' amended on October 27, 2011.

(B) San Joaquin Valley Air Pollution Control District.

(*1*) Rule 4682, ''Polystyrene, Polyethylene, and Polypropylene Products Manufacturing,'' amended on December 15, 2011.

(*2*) Rule 4402, ''Crude Oil Production Sumps,'' amended on December 15, 2011.

(*3*) Rule 4625, ''Wastewater Separators,'' amended on December 15, 2011.

(*4*) Rule 4352, ''Solid Fuel Fired Boilers, Steam Generators and Process Heaters,'' amended on December 15, 2011.

(C) San Diego County Air Pollution Control District

(*1*) Rule 67.4, ''Metal Container, Metal Closure and Metal Coil Coating Operations,'' adopted and effective on November 9, 2011.

(*2*) Rule 67.16, ''Graphic Arts Operations,'' adopted on November 9, 2011 and effective on May 9, 2012.

(D) Antelope Valley Air Quality Management District

(*1*) Rule 1168, ''Adhesive and Sealant Applications,'' amended on September 20, 2011.

(E) Imperial County Air Pollution Control District.

(*1*) Rule 904, ''Prevention of Significant Deterioration (PSD) Permit Program,'' revised on December 20, 2011.

(F) South Coast Air Quality Management District.

(*1*) Rule 463, ''Organic Liquid Storage,'' amended on November 4, 2011.

(G) Santa Barbara County Air Pollution Control District.

(*1*) Rule 352, ''Natural Gas-Fired Fan-Type Central Furnaces and Small Water Heaters,'' revised on October 20, 2011.

(ii) *Additional materials.* (A) Imperial County Air Pollution Control District (ICAPCD).

(*1*) Letter dated July 10, 2012 from Brad Poiriez, ICAPCD, to Gerardo Rios, United States Environmental Protection Agency Region 9, regarding Clarifications of District Rule 904 and 40 CFR 51.166.

(*2*) Letter dated August 21, 2012 from Brad Poiriez, ICAPCD, to Gerardo Rios, United States Environmental Protection Agency Region 9, regarding Clarifications of District Rule 904 and 40 CFR 52.21(k)(2).

(412) New regulations were submitted on June 14, 2011 by the Governor's designee.

(i) *Incorporation by Reference.* (A) San Joaquin Valley Unified Air Pollution Control District.

(*1*) Rule 3170, ''Federally Mandated Ozone Nonattainment Fee,'' amended on May 19, 2011.

(413) The following plan revisions were submitted on October 12, 2009, by the Governor's designee.

(i) *Incorporation by reference.* (A) California Department of Pesticide Regulation.

(*1*) California Code of Regulations, Title 3 (Food and Agriculture), Division 6 (Pesticides and Pest Control Operations), Chapter 2 (Pesticides), Subchapter 4 (Restricted Materials), Article 4 (Field Fumigation Use Requirements), sections 6447, ''Methyl Bromide-Field Fumigation—General Requirements,'' the undesignated introductory text (operative January 25, 2008; as published in Register 2010, No. 44); 6447.3, ''Methyl Bromide-Field Fumigation Methods'' (operative January 25, 2008); 6448, ''1,3, Dichloropropene Field Fumigation—General Requirements'' (operative January 25, 2008); 6449, ''Chloropicrin Field Fumigation—General Requirements'' (operative January 25, 2008); 6450, ''Metam-Sodium, Potassium N-methyldithiocarbamate (metam-potassium), and Dazomet Field Fumigation—General Requirements'' (operative January 25, 2008); 6450.2, ''Dazomet Field Fumigation Methods'' (operative January 25, 2008); 6451, ''Sodium Tetrathiocarbonate Field Fumigation—General Requirements'' (operative January 25, 2008); 6451.1, ''Sodium Tetrathiocarbonate Field Fumigation Methods'' (operative January 25, 2008); 6452, ''Reduced Volatile Organic Compound Emissions Field Fumigation Methods'' (operative January 25, 2008); 6452.1, ''Fumigant Volatile Organic Compound Emission Records and Reporting'' (operative January 25, 2008).

(ii) *Additional material.* (A) California Department of Pesticide Regulation.

(*1*) Decision, ''In the Matter of Proposed Ozone SIP Commitment for the San Joaquin Valley,'' signed by Mary-Ann Warmerdam, April 17, 2009, including Exhibit A, ''Department of Pesticide Regulation Proposed SIP Commitment for San Joaquin Valley.''

(*2*) Memorandum, Rosemary Neal, Ph.D., California Department of Pesticide Regulation to Randy Segawa, California Department of Pesticide Regulation, November 5, 2008; Subject: Update to the Pesticide Volatile Organic Inventory. Estimated Emissions 1990–2006, and Preliminary Estimates for 2007.

(414) The following plan revisions were submitted on August 2, 2011, by the Governor's designee.

(i) *Incorporation by reference.* (A) California Department of Pesticide Regulation.

(*1*) California Code of Regulations, Title 3 (Food and Agriculture), Division 6 (Pesticides and Pest Control Operations), Chapter 2 (Pesticides), Subchapter 4 (Restricted Materials), Article 4 (Field Fumigation Use Requirements), sections 6448.1, ''1,3-Dichloropropene Field Fumigation Methods'' (operative April 7, 2011); 6449.1, ''Chloropicrin Field Fumigation Methods'' (operative April 7, 2011); 6450.1, ''Metam-Sodium and Potassium N-methyldithiocarbamate (Metam-Potassium) Field Fumigation Methods'' (operative April 7, 2011); 6452.2, ''Fumigant Volatile Organic Compound Emission Limits'' (excluding benchmarks for, and references to, Sacramento Metro, San Joaquin Valley, South Coast, and Southeast Desert in subsection (a) and excluding subsection (d))(operative April 7, 2011); 6452.3, ''Field Fumigant Volatile Organic Compound Emission Allowances'' (operative April 7, 2011); 6452.4, ''Annual Volatile Organic Compound Emissions Inventory Report'' (excluding reference to section 6446.1 in subsection(a)(4))(operative April 7, 2011).

(*2*) California Code of Regulations, Title 3 (Food and Agriculture), Division 6 (Pesticides and Pest Control Operations), Chapter 3 (Pest Control Operations), Subchapter 2 (Work Requirements), Article 1 (Pest Control Operations Generally), sections 6624, ''Pesticide Use Records'' (excluding references in subsection (f) to methyl iodide and section 6446.1) (operative December 20, 2010); section 6626, ''Pesticide Use Reports for Production Agriculture'' (operative April 7, 2011).

(415) New and amended regulations were submitted on August 23, 2011 by the Governor's designee. Final approval of these regulations is based, in part, on the clarifications contained in a May 18, 2012 letter from the San Joaquin Valley Unified Air Pollution Control District regarding specific implementation of parts of the Prevention of Significant Deterioration program.

(i) *Incorporation by reference.* (A) San Joaquin Valley Unified Air Pollution Control District.

(*1*) Rule 2410, ''Prevention of Significant Deterioration,'' adopted on June 16, 2011.

(ii) *Additional materials.* (A) San Joaquin Valley Unified Air Pollution Control District (SJVUAPCD).

(*1*) Letter dated May 18, 2012 from David Warner, SJVUAPCD, to Gerardo Rios, United States Environmental Protection Agency Region 9, regarding Clarifications of District Rule 2410 and 40 CFR 51.166.

(416) Specified portions of the following rule were submitted on November 18, 2011 by the Governor's designee.

(i) *Incorporation by reference.* (A) San Joaquin Valley Unified Air Pollution Control District (SJVUAPCD).

(*1*) The following specified portions of SJVUAPCD Rule 4694, Wine Fermentation and Storage Tanks, adopted December 15, 2005:

(*i*) Section 1.0 (Purpose), except for the words ''fermentation and'' and ''or achieve equivalent reductions from alternative emission sources'';

(*ii*) Section 2.0 (Applicability), except for the words ''fermenting wine and/or'';

(*iii*) Section 3.0 (Definitions), paragraphs 3.1—Air Pollution Control Officer (APCO), 3.2—Air Resources Board (ARB or CARB), 3.18—Gas Leak, 3.19—Gas-Tight, 3.21—Must, 3.22—Operator, 3.27—Storage Tank, 3.29—Tank, 3.33—Volatile Organic Compound (VOC), 3.35—Wine, and 3.36—Winery;

(*iv*) Section 4.0 (Exemptions), paragraph 4.2;

(*v*) Section 5.0 (Requirements), paragraph 5.2—Storage Tanks; and

(*vi*) Section 6.0 (Administrative Requirements), paragraph 6.4—Monitoring and Recordkeeping, introductory text and paragraph 6.4.2.

(*2*) Rule 4566, ''Organic Material Composting Operations,'' adopted on August 18, 2011.

(B) South Coast Air Quality Management District.

(*1*) Rule 1133.1, ''Chipping and Grinding Activities,'' amended on July 8, 2011.

(*2*) Rule 1133.3, ''Emission Reductions from Greenwaste Composting Operations,'' adopted on July 8, 2011.

(C) Placer County Air Pollution Control District.

(*1*) Rule 502, ''New Source Review,'' as amended on October 13, 2011.

(ii) *Additional materials.* (A) California Air Resources Board (CARB)

(*1*) CARB Executive Order S–11–024, November 18, 2011, adopting specified portions of SJVUAPCD Rule 4694 as a revision to the SIP.

(B) San Joaquin Valley Unified Air Pollution Control District (SJVUAPCD)

(*1*) SJVUAPCD Resolution No. 11–08–20, August 18, 2011, adopting specified portions of SJVUAPCD Rule 4694 as a revision to the SIP.

(417) [Reserved]

(418) New and amended regulation for the following APCD was submitted on April 22, 2011, by the Governor's Designee.

(i) *Incorporation by Reference.* (A) South Coast Air Quality Management District

(*1*) Rule 317, ''Clean Air Act Non-Attainment Fees,'' amended on February 4, 2011.

(419) New and amended regulations for the following APCDs were submitted on April 25, 2012. Final approval of these regulations is based, in part, on the clarifications contained in letters dated July 19, 2012 and August 21, 2012 from the Eastern Kern Air Pollution Control District regarding specific implementation of parts of the Prevention of Significant Deterioration program.

(i) *Incorporation by reference.* (A) Eastern Kern Air Pollution Control District.

(*1*) Rule 210.4, ''Prevention of Significant Deterioration,'' adopted on January 12, 2012.

(B) Placer County Air Pollution Control District

(*1*) Rule 102, ''Definitions,'' amended February 9, 2012.

(C) Butte County Air Quality Management District.

(*1*) Rule 207, ''Wood Burning Devices,'' amended on December 11, 2008.

(ii) *Additional materials.* (A) Eastern Kern Air Pollution Control District (EKAPCD).

(*1*) Letter dated July 19, 2012 from David L. Jones, EKAPCD, to Gerardo Rios, United States Environmental Protection Agency Region 9, regarding

Clarifications of District Rule 210.4 and 40 CFR 51.166.

(*2*) Letter dated August 21, 2012 from David L. Jones, EKAPCD, to Gerardo Rios, United States Environmental Protection Agency Region 9, regarding Clarifications of District Rule 210.4 and 40 CFR 52.21(k)(2).

(420) A new regulation for the following APCD was submitted on July 3, 2012. Final approval of this regulation is based, in part, on the clarifications contained in a letter dated August 7, 2012 from the Yolo-Solano Air Quality Management District regarding specific implementation of parts of the Prevention of Significant Deterioration program.

(i) *Incorporation by reference.* (A) Yolo-Solano Air Quality Management District.

(*1*) Rule 3.24, ''Prevention of Significant Deterioration,'' adopted on June 13, 2012.

(ii) *Additional materials.* (A) Yolo-Solano Air Quality Management District (YSAQMD).

(*1*) Letter dated August 7, 2012 from Mat Ehrhardt, YSAQMD, to Gerardo Rios, United States Environmental Protection Agency Region 9, regarding Clarifications of District Rule 210.4 and 40 CFR 51.166.

(421) New regulations were submitted on December 30, 2010, by the Governor's designee. Final approval of this regulation is based, in part, on the clarifications contained in a August 15, 2012 letter from the South Coast Air Quality Management District regarding specific implementation of parts of the Prevention of Significant Deterioration program.

(i) *Incorporation by reference.* (A) South Coast Air Quality Management District.

(*1*) Rule 1714, ''Prevention of Significant Deterioration for Greenhouse Gases,'' adopted on November 5, 2010.

(ii) *Additional materials.* (A) South Coast Air Quality Management District (SCAQMD).

(*1*) Letter dated August 15, 2012 from Mohsen Nazemi, SCAQMD, to Gerardo Rios, EPA Region 9, regarding Clarifications for Rule 1714—Prevention of Significant Deterioration for Greenhouse Gases.

(422) Amended regulations for the following APCDs were submitted on September 20, 2012 by the Governor's designee.

(i) *Incorporation by reference.* (A) Monterey Bay Unified Air Pollution Control District

(*1*) Rule 400, ''Visible Emissions,''amended on August 15, 2012.

(423) New and amended regulations for the following APCDs were submitted on September 21, 2012, by the Governor's designee.

(i) *Incorporation by reference.* (A) Placer County Air Pollution Control District

(*1*) Rule 301, ''Nonagricultural Burning Smoke Management,'' amended on February 9, 2012.

(*2*) Rule 302, ''Agricultural Waste Burning Smoke Management,'' amended on February 9, 2012.

(*3*) Rule 303, ''Prescribed Burning Smoke Management,'' amended on February 9, 2012.

(*4*) Rule 304, ''Land Development Burning Smoke Management,'' amended on February 9, 2012.

(*5*) Rule 305, ''Residential Allowable Burning,'' amended on February 9, 2012.

(*6*) Rule 306, ''Open Burning of Nonindustrial Wood Waste at Designated Disposal Sites,'' amended on February 9, 2012.

(*7*) Rule 233, ''Biomass Boilers,'' amended on June 14, 2012.

(B) Sacramento Metropolitan Air Quality Management District.

(*1*) Rule 417, ''Wood Burning Appliances,'' adopted on October 26, 2006.

(*2*) Rule 421, ''Mandatory Episodic Curtailment of Wood and Other Solid Fuel Burning (except section 402),'' amended on September 24, 2009.

(ii) *Additional Material.* (A) Sacramento Metropolitan Air Quality Management District.

(1) Rule 421, ''Mandatory Episodic Curtailment of Wood and Other Solid Fuel Burning,'' Financial Hardship Exemption Decision Tree, dated December 12, 2007.

(C) South Coast Air Quality Management District.

(*1*) Rule 461, ''Gasoline Transfer and Dispensing,'' amended on April 6, 2012.

(D) Antelope Valley Air Quality Management District.

(*1*) Rule 107, ''Certification of Submission and Emission Statements,'' adopted on May 15, 2012.

(*2*) Rule 1151, ''Motor Vehicle and Mobile Equipment Coating Operations,'' amended on June 19, 2012.

(E) Santa Barbara County Air Pollution Control District.

(*1*) Rule 102, ''Definitions'' amended on June 21, 2012.

(*2*) Rule 353, ''Adhesives and Sealants,'' revised on June 21, 2012.

(*3*) Rule 321, ''Solvent Cleaning Machines and Solvent Cleaning,'' revised on June 21, 2012.

(*4*) Rule 330, ''Surface Coating of Metal Parts and Products,'' revised on June 21, 2012.

(*5*) Rule 349, ''Polyester Resin Operations,'' revised on June 21, 2012.

(F) Feather River Air Quality Management District.

(*1*) Rule 10.1, ''New Source Review,'' as amended on February 6, 2012.

(G) Butte County Air Quality Management District.

(*1*) Rule 300, ''Open Burning Requirements, Prohibitions and Exemptions,'' amended on February 24, 2011.

(*2*) Previously approved on July 8, 2015 in paragraph (c)(423)(i)(G)(*1*) of this section and now deleted with replacement in paragraph (c)(474)(i)(C)(*1*), Rule 300, ''Open Burning Requirements, Prohibitions and Exemptions,'' approved on February 24, 2011.

(424) New and amended regulations for the following APCDs were submitted on November 7, 2012 by the Governor's designee.

(i) *Incorporation by Reference.* (A) Imperial County Air Pollution Control District

(*1*) Rule 800, ''General Requirements for Control of Fine Particulate Matter PM10,'' amended on October 16, 2012.

(*2*) Rule 804, ''Open Areas,'' amended on October 16, 2012.

(*3*) Rule 805, ''Paved and Unpaved Roads,'' amended on October 16, 2012.

(*4*) Rule 806, ''Conservation Management Practices (CMPs),'' amended on October 16, 2012.

(425) A plan was submitted on December 28, 2012, by the Governor's designee.

(i) [Reserved]

(ii) *Additional material.* (A) San Diego County Air Pollution Control District (SDAPCD).

(*1*) Redesignation Request and Maintenance Plan for the 1997 National Ozone Standard for San Diego County, including motor vehicle emissions budgets (MVEBs) and inventories.

(*2*) SDAPCD Resolution Number 12–175, dated December 5, 2012. ''Resolution Adopting the Redesignation Request and Maintenance Plan for the 1997 National Ozone Standard for San Diego County,'' including inventories and motor vehicle emissions budgets for 2020 and 2025.

(B) State of California Air Resources Board (CARB)

(*1*) CARB Resolution Number 12–36, dated December 6, 2012. ''Approval of the San Diego 8-Hour Ozone SIP Redesignation Request and Maintenance Plan,'' including inventories and motor vehicle emissions budgets for 2020 and 2025.

(426) The following plan was submitted on April 28, 2010, by the Governor's Designee.

(i) [Reserved]

(ii) *Additional materials.* (A) South Coast Air Quality Management District.

(*1*) *Final PM_{10} Redesignation Request and Maintenance Plan for the South Coast Air Basin* (December 2009) (2009 South Coast PM_{10} Redesignation Request and Maintenance Plan), adopted January 8, 2010.

(*2*) SCAQMD Board Resolution 10–1, dated January 8, 2010, adopting the 2009 South Coast PM_{10} Redesignation Request and Maintenance Plan.

(B) State of California Air Resources Board.

(*1*) CARB Resolution 10–21, dated March 25, 2010, adopting the 2009 South Coast PM_{10} Redesignation Request and Maintenance Plan.

(427) New and amended regulations for the following APCDs were submitted on September 26, 2012, by the Governor's Designee.

(i) *Incorporation by Reference.* (A) Sacramento Metropolitan Air Quality Management District.

(*1*) Rule 214, ''Federal New Source Review,'' amended on August 23, 2012.

(*2*) Rule 217, ''Public Notice Requirements for Permits,'' adopted on August 23, 2012.

(428) New and amended regulations for the following APCDs was submitted

on February 6, 2013, by the Governor's Designee.

(i) *Incorporation by Reference.* (A) Placer County Air Pollution Control District.

(*1*) Rule 235, ''Adhesives,'' amended on October 11, 2012.

(*2*) Rule 239, ''Graphic Arts Operations,'' amended on October 11, 2012.

(B) Antelope Valley Air Quality Management District.

(*1*) Rule 218, ''Continuous Emission Monitoring,'' amended on July 17, 2012.

(*2*) Rule 218.1, ''Continuous Emission Monitoring Performance Specifications,'' adopted on July 17, 2012.

(C) Mojave Desert Air Quality Management District.

(*1*) Rule 1113, ''Architectural Coatings,'' amended on April 23, 2012.

(D) South Coast Air Quality Management District.

(*1*) Rule 1177, ''Liquefied Petroleum Gas Transfer and Dispensing,'' adopted on June 1, 2012.

(*2*) Rule 1147, ''NO_X Reductions from Miscellaneous Sources,'' amended on September 9, 2011.

(E) Great Basin Unified Air Pollution Control District.

(*1*) Rule 221, ''Prevention of Significant Deterioration (PSD) Permit Requirements for New Major Facilities or Major Modifications in Attainment or Unclassifiable Areas,'' except for the incorporation by reference of 40 CFR 52.21(b)(49)(v) into sections C. and D3, adopted on September 5, 2012.

(F) Butte County Air Quality Management District.

(*1*) Rule 1107, ''Prevention of Significant Deterioration (PSD) Permits,'' except for the incorporation by reference of 40 CFR 52.21(b)(49)(v) into sections 3 and 4.1, adopted on June 28, 2012.

(ii) *Additional materials.* (A) Great Basin Unified Air Pollution Control District.

(*1*) Letter dated November 13, 2014 from Theodore D. Schade, Great Basin Unified Air Pollution Control District, to Gerardo Rios, United States Environmental Protection Agency Region 9, regarding clarifications of District Rule 221 and 40 CFR 51.166.

(*2*) Letter dated April 15, 2015, from Phillip L. Kiddoo, Great Basin Unified Air Pollution Control District, to Gerardo Rios, United States Environmental Protection Agency Region 9, regarding additional clarifications of District Rule 221 and 40 CFR 51.166.

(B) Butte County Air Quality Management District.

(*1*) Letter dated November 13, 2014, from W. James Wagoner, Butte County Air Quality Management District, to Gerardo Rios, United States Environmental Protection Agency Region 9, regarding clarifications of District Rule 1107 and 40 CFR 51.166.

(*2*) Letter dated April 8, 2015, from W. James Wagoner, Butte County Air Quality Management District, to Gerardo Rios, United States Environmental Protection Agency Region 9, regarding additional clarifications of District Rule 1107 and 40 CFR 51.166.

(429) New and amended regulations for the following APCDs was submitted on April 22, 2013, by the Governor's Designee.

(i) *Incorporation by Reference.* (A) Ventura County Air Pollution Control District.

(*1*) Rule 74.20, ''Adhesives and Sealants,'' revised on September 11, 2012.

(*2*) Rule 74.11.1, ''Large Water Heaters and Small Boilers,'' amended on September 11, 2012.

(*3*) Rule 74.15.1, ''Boilers, Steam Generators, and Process Heaters,'' amended on September 11, 2012.

(*4*) Rule 74.13, ''Aerospace Assembly and Component Manufacturing Operations,'' revised on September 11, 2012.

(*5*) Rule 74.24, ''Marine Coating Operations,'' revised on September 11, 2012.

(*6*) Previously approved on May 19, 2014, in paragraph (c)(429)(i)(A)(*3*) of this section and now deleted with replacement in (c)(472)(i)(B)(*1*), Rule 74.15.1, ''Boilers, Steam Generators, and Process Heaters,'' amended on September 11, 2012.

(B) Antelope Valley Air Quality Management District.

(*1*) Rule 431.1, ''Sulfur Content of Gaseous Fuels,'' amended on August 21, 2012.

(C) Monterey Bay Unified Air Pollution Control District.

(*1*) Rule 426, ''Architectural Coatings,'' amended on August 15, 2012.

(D) Feather River Air Quality Management District.

(*1*) Rule 10.10, ''Prevention of Significant Deterioration,'' except for the incorporation by reference of 40 CFR 52.21(b)(49)(v) into sections B and F.1, adopted on August 1, 2011.

(E) Bay Area Air Quality Management District.

(*1*) Regulation 2, ''Permits,'' Rule 1, ''General Requirements,'' adopted on December 19, 2012.

(*2*) Regulation 2, ''Permits,'' Rule 2, ''New Source Review,'' adopted on December 19, 2012.

(*3*) Regulation 2, ''Permits,'' Rule 4, ''Emissions Banking,'' adopted on December 19, 2012.

(*4*) Previously approved on August 1, 2016 in paragraphs (c)(429)(i)(E)(*1*) and (*2*), and on December 4, 2017 in paragraph (c)(429)(i)(E)(*3*) of this section and now deleted with replacement in paragraph (c)(502)(i)(A)(*1*) of this section, Regulation 2, Rules 1, 2, and 4.

(ii) *Additional materials.* (A) Feather River Air Quality Management District.

(*1*) Letter dated December 18, 2014 from Christopher D. Brown, Feather River Air Quality Management District, to Gerardo Rios, United States Environmental Protection Agency Region 9, regarding clarifications of District Rule 10.10 and 40 CFR 51.166.

(430) New and amended regulations for the following APCD was submitted on June 11, 2013 by the Governor's Designee.

(i) *Incorporation by Reference.* (A) South Coast Air Quality Management District.

(*1*) Rule 444, ''Open Burning,'' adopted on May 3, 2013.

(*2*) Rule 445, ''Wood Burning Devices,'' adopted on May 3, 2013.

(431) A plan was submitted on December 7, 2010, by the Governor's designee.

(i) [Reserved]

(ii) *Additional materials.* (A) Sacramento Metropolitan Air Quality Management District (SMAQMD).

(*1*) PM_{10} Implementation/Maintenance Plan and Redesignation Request for Sacramento County, including motor vehicle emissions budgets (MVEBs) and attainment year emission inventory.

(*2*) SMAQMD Resolution Number 2010–046, dated October 28, 2010. ''Sacramento Metropolitan Air Quality Management District PM_{10} Implementation/Maintenance Plan and Redesignation Request for Sacramento County,'' including attainment year emissions inventory and MVEBs for 2012 and 2022.

(B) State of California Air Resources Board (CARB).

(*1*) CARB Resolution Number 10–37, dated November 18, 2010. ''Adoption and Submittal of the PM_{10} Implementation/Maintenance Plan and Redesignation Request for Sacramento County,'' including attainment year emissions inventory and MVEBs for 2012 and 2022.

(432) The following plan was submitted on November 14, 2011, by the Governor's Designee.

(i) [Reserved]

(ii) *Additional materials.* (A) South Coast Air Quality Management District.

(*1*) South Coast Air Quality Management District Proposed Contingency Measures for the 2007 $PM_{2.5}$ SIP (dated October 2011) (''Contingency Measures SIP''), adopted October 7, 2011.

(*2*) SCAQMD Resolution No. 11–24, dated October 7, 2011, adopting the Contingency Measures SIP.

(*3*) Letter dated April 24, 2013 from Elaine Chang, Deputy Executive Officer, SCAQMD, to Deborah Jordan, Director, Air Division, EPA Region 9, Re: ''Update of the 2012 RFP Emissions and 2015 Reductions from Contingency Measures for the 2007 Annual $PM_{2.5}$ Air Quality Management Plan for the South Coast Air Basin,'' including attachments.

(B) State of California Air Resources Board.

(*1*) CARB Executive Order S–11–023, dated November 14, 2011, adopting the Contingency Measures SIP.

(433) The following plan was submitted on June 20, 2012, by the Governor's Designee.

(i) [Reserved]

(ii) *Additional materials.* (A) South Coast Air Quality Management District.

(*1*) *Final 2012 Lead State Implementation Plan—Los Angeles County* (May 2012) (''2012 Los Angeles County Lead SIP''), adopted May 4, 2012.

(*2*) SCAQMD Board Resolution 12–11, dated May 4, 2012, adopting the 2012 Los Angeles County Lead SIP.

(B) State of California Air Resources Board.

(*1*) CARB Resolution 12–20, dated May 24, 2012, adopting the 2012 Los Angeles County Lead SIP.

(434) New and amended regulations for the following APCDs was submitted on September 24, 2013, by the Governor's Designee.

(i) *Incorporation by Reference.* (A) Placer County Air Pollution Control District.

(*1*) Rule 240, ''Surface Preparation and Cleanup,'' amended on December 11, 2003.

(435) A plan revision submitted on November 15, 2012 by the Governor's Designee.

(i) [Reserved]

(ii) *Additional materials.* (A) Butte County Air Quality Management District.

(1) ''2012 $PM_{2.5}$ Emission Inventory Submittal to the State Implementation Plan for the Chico, CA/Butte County (partial) Planning Area,'' as submitted by the California Air Resources Board on November 15, 2012. The document in CARB's submittal is titled, ''Chico Nonattainment Area (Partial Butte County) 2011 Daily Winter-Time Emissions Inventory (Base Year 2005—Grown and Controlled in Tons Per Day.''

(436) A plan revision submitted on January 14, 2013 by the Governor's Designee.

(i) [Reserved]

(ii) *Additional materials.* (A) San Francisco Bay Area Air Quality Management District.

(1) ''2012 $PM_{2.5}$ Emission Inventory to the State Implementation Plan for the San Francisco Bay Area'' as submitted by the California Air Resources Board on January 14, 2013. The document in CARB's submittal is titled, ''Bay Area Winter Emissions Inventory for Primary $PM_{2.5}$ & PM Precursors: Year 2010.''

(437) New and amended regulations for the following APCD was submitted on November 17, 2009 by the Governor's designee.

(i) [Reserved]

(ii) *Additional Material.* (A) Ventura County Air Pollution Control District.

(*1*) Reasonably Available Control Technology State Implementation Plan Revision (2009 RACT SIP Revision) as adopted on September 15, 2009 (''2009 RACT SIP'').

(438) The following plan was submitted on July 3, 2013, by the Governor's Designee.

(i) [Reserved]

(ii) *Additional materials.* (A) San Joaquin Valley Unified Air Pollution Control District.

(*1*) ''Quantifying Contingency Reductions for the 2008 $PM_{2.5}$ Plan'' (dated June 20, 2013), adopted October 7, 2011.

(*2*) SJVUAPCD Governing Board Resolution No. 13–6–18, dated June 20, 2013, ''In the Matter of: Authorizing Submittal of the 'Quantification of Contingency Reductions for the 2008 $PM_{2.5}$ Plan' to EPA.''

(*3*) *Electronic mail,* dated July 24, 2013, from Samir Sheikh, SJVUAPCD, to Kerry Drake, EPA Region 9, ''RE: Per our conversation earlier.''

(B) State of California Air Resources Board.

(*1*) CARB Executive Order 13–30, dated June 27, 2013, ''San Joaquin Valley $PM_{2.5}$ Contingency Measures Update.''

(C) Previously approved in paragraphs (c)(438)(ii)(A)(*1*), (c)(438)(ii)(A)(*2*), (c)(438)(ii)(A)(*3*), and (c)(438)(ii)(B)(*1*) of this section and now deleted without replacement: ''Quantifying Contingency Reductions for the 2008 $PM_{2.5}$ Plan'' (dated June 20, 2013), SJVUAPCD Governing Board Resolution No. 13–6–18 (dated June 20, 2013), *Electronic mail* (dated July 24, 2013) from Samir Sheikh to Kerry Drake, and California Air Resources Board Executive Order 13–30 (dated June 27, 2013).

(439) The following plan was submitted on February 13, 2013, by the Governor's designee.

(i) [Reserved]

(ii) *Additional material.* (A) California Air Resources Board.

(*1*) Resolution 13–3, dated January 25, 2013, adopting the Final 2012 Air Quality Management Plan (December 2012) prepared by the South Coast Air Quality Management District.

(*2*) Letter from Richard W. Corey, Executive Officer, California Air Resources Board, dated May 2, 2014.

(*3*) Letter and enclosures from Lynn Terry, Deputy Executive Officer, California Air Resources Board, dated April 3, 2014, providing supplemental information related to Appendix VIII (''Vehicle Miles Traveled Emissions Offset Demonstration'') of the Final 2012 Air Quality Management Plan.

(B) South Coast Air Quality Management District.

(*1*) Governing Board Resolution No. 12–19, dated December 7, 2012, adopting the Final 2012 Air Quality Management Plan.

(*2*) The following portions of the Final 2012 Air Quality Management Plan (December 2012): Ozone-related portions of chapter 4 (''Control Strategy and Implementation''); Appendix IV–A (''District's Stationary Source Control Measures''); Appendix IV–B (''Proposed Section 182(e)(5) Implementation Measures''); Appendix IV–C (''Regional Transportation Strategy and Control Measures''); and Appendix VII (''1-Hour Ozone Attainment Demonstration'').

(*3*) Letter from Barry R. Wallerstein, D.Env, Executive Officer, South Coast Air Quality Management District, May 1, 2014.

(*4*) Appendix VIII (''Vehicle Miles Traveled Emissions Offset Demonstration'') (December 2012) of the Final 2012 Air Quality Management Plan.

(*5*) The following portions of the Final 2012 Air Quality Management Plan (December 2012): $PM_{2.5}$-related portions of chapter 4 (''Control Strategy and Implementation''); Appendix III (''Base and Future Year Emissions Inventory''); Appendix IV–A (''District's Stationary Source Control Measures''); and Appendix V (''Modeling and Attainment Demonstrations''). SCAQMD's commitments to adopt and implement specific rules and measures in accordance with the schedule provided in Chapter 4 of the 2012 $PM_{2.5}$ Plan as modified by Table F–1 in Attachment F to the 2015 Supplement, to achieve the emissions reductions shown therein, and to submit these rules and measures to CARB within 30 days of adoption for transmittal to EPA as a revision to the SIP, as stated on pp. 7–8 of SCAQMD Governing Board Resolution 12–19 and modified by SCAQMD Governing Board Resolution 15–3, excluding all commitments pertaining to control measure IND–01 (Backstop Measures for Indirect Sources of Emissions from Ports and Port-Related Facilities).

(*6*) The $PM_{2.5}$-related portions of Appendix VI (''Reasonably Available Control Measures (RACM) Demonstration'') of the Final 2012 Air Quality Management Plan (December 2012).

(440) Amended regulations were submitted by the Governor's designee on September 28, 2011.

(i) *Incorporation by reference.* (A) San Joaquin Valley Unified Air Pollution Control District.

(*1*) Rule 2020, ''Exemptions,'' amended on August 18, 2011.

(441) New and amended regulations for the following APCDs were submitted on May 13, 2014 by the Governor's Designee.

(i) *Incorporation by Reference.* (A) South Coast Air Quality Management District.

(1) Rule 1146, ''Emissions of Oxides of Nitrogen from Industrial, Institutional, and Commercial Boilers, Steam Generators, and Process Heaters,'' amended November 1, 2013.

(2) Rule 1146.1, ''Emissions of Oxides of Nitrogen from Small Industrial, Institutional, and Commercial Boilers, Steam Generators, and Process Heaters,'' amended November 1, 2013.

(B) Placer County Air Pollution Control District.

(*1*) Rule 502, ''New Source Review,'' amended on August 8, 2013.

(*2*) Rule 247, ''Natural Gas-Fired Water Heaters, Small Boilers and Process Heaters,'' amended February 13, 2014.

(*3*) Rule 249, ''Surface Coating of Plastic Parts and Products,'' adopted on August 8, 2013.

(C) Ventura County Air Pollution Control District.

(*1*) Rule 54, ''Sulfur Compounds,'' revised on January 14, 2014.

(*2*) Metalworking Fluids and Direct-Contact Lubricants,'' adopted on November 12, 2013.

(*3*) Rule 23, ''Exemptions from Permit,'' revised on November 12, 2013.

(D) San Joaquin Valley Air Pollution Control District.

(*1*) Rule 4621, ''Gasoline Transfer into Stationary Storage Containers, Delivery Vessels, and Bulk Plants,'' amended on December 19, 2013.

(*2*) Rule 4622, ''Gasoline Transfer into Motor Vehicle Fuel Tanks,'' amended on December 19, 2013.

(*3*) Rule 4308, ''Boilers, Steam Generators, and Process Heaters—0.075 MMBtu/hr to less than 2.0 MMBtu/hr,'' amended on November 14, 2013.

(*4*) Rule 4702, ''Internal Combustion Engines,'' amended on November 14, 2013.

(E) Antelope Valley Air Quality Management District.

(*1*) Rule 1124, ''Aerospace Assembly and Component Manufacturing Operations,'' amended on August 20, 2013.

(*2*) Rule 1130, ''Graphic Arts,'' amended on November 19, 2013.

(*3*) Rule 1113, ''Architectural Coatings,'' amended on March 18, 2003.

(F) San Luis Obispo County Air Pollution Control District.

(*1*) Rule 220, ''Federal Prevention of Significant Deterioration,'' except for the incorporation by reference of 40 CFR 52.21(b)(49)(v) into sections B and D.3., amended on January 22, 2014.

(ii) *Additional materials.* (A) San Luis Obispo County Air Pollution Control District.

(*1*) Letter dated December 16, 2014 from Larry R. Allen, San Luis Obispo County Air Pollution Control District, to Gerardo Rios, United States Environmental Protection Agency Region 9, regarding clarifications of District Rule 220 and 40 CFR 51.166.

(442) New and amended regulations for the following APCDs were submitted on February 10, 2014 by the Governor's Designee.

(i) *Incorporation by Reference.* (A) Imperial County Air Pollution Control District.

(*1*) Rule 101, ''Definitions,'' revised on October 22, 2013.

(*2*) Rule 400.3, ''Internal Combustion Engine(s),'' adopted on October 22, 2013.

(*3*) Rule 400.4, ''Emissions of Oxides of Nitrogen from Wallboard Kilns,'' adopted on October 22, 2013.

(*4*) Previously approved on October 2, 2014 in paragraph (c)(442)(i)(A)(*1*) of this section and now deleted with replacement in paragraph (c)(485)(i)(A)(*1*), Rule 101, ''Definitions,'' revised on October 22, 2013.

(*5*) Rule 206, ''Processing of Applications,'' revised on October 22, 2013.

(B) San Joaquin Valley Unified Air Pollution Control District.

(*1*) Rule 1020, ''Definitions,'' amended on February 21, 2013.

(C) South Coast Air Quality Management District.

(*1*) Rule 1114, ''Petroleum Refinery Coking Operations,'' adopted on May 3, 2013.

(D) Placer County Air Pollution Control District.

(*1*) Rule 213, ''Gasoline Transfer into Stationary Storage Containers,'' amended on February 21, 2013.

(*2*) Rule 214, ''Transfer of Gasoline into Vehicle Fuel Tanks,'' amended on February 21, 2013.

(E) Feather River Air Quality Management District.

(*1*) Rule 3.14, ''Surface Preparation and Clean-Up,'' amended on August 1, 2011.

(*2*) Rule 3.20, ''Wood Products Coating Operations,'' amended on August 1, 2011.

(*3*) Rule 3.21, ''Industrial, Institutional, and Commercial Boilers, Steam Generators, and Process Heaters,'' adopted on June 5, 2006.

(*4*) Rule 3.19, ''Vehicle and Mobile Equipment Coating Operations,'' amended on August 1, 2011.

(F) Yolo-Solano Air Quality Management District.

(1) Rule 1.1, ''General Provisions and Definitions,'' revised on May 8, 2013.

(2) Rule 2.31, ''Solvent Cleaning and Degreasing,'' revised on May 8, 2013.

(*3*) Previously approved on April 28, 2015 in paragraph (442)(i)(F)(*1*) of this section and now deleted with replacement in (472)(i)(A)(*1*), Rule 1.1, ''General Provisions and Definitions,'' revised on May 8, 2013.

(G) Butte County Air Quality Management District.

(*1*) Rule 434, ''Emission Statements,'' adopted on April 25, 2013.

(H) Santa Barbara County Air Pollution Control District.

(*1*) Rule 810, ''Federal Prevention of Significant Deterioration (PSD),'' except for the incorporation by reference of 40 CFR 52.21(b)(49)(v) into sections B and D.3., amended on June 20, 2013.

(ii) *Additional materials.* (A) Santa Barbara County Air Pollution Control District.

(*1*) Letter dated November 25, 2014 from David Van Mullem, Santa Barbara County Air Pollution Control District, to Gerardo Rios, United States Environmental Protection Agency Region 9, regarding clarifications of District Rule 810 and 40 CFR 51.166.

(443) New and amended regulations for the following APCDs were submitted on December 23, 1998 by the Governor's Designee.

(i) *Incorporation by Reference.* (A) Lake County Air Quality Management District.

(*1*) Lake County Air Quality Management District Board of Directors Resolution 98–195 adopting Section 228, ''Hazardous Air Pollutants (HAP),'' adopted on June 23, 1998, as ''Exhibit A.''

(444) New and amended regulations were submitted on May 28, 2014, by the Governor's designee.

(i) *Incorporation by reference.* (A) California Air Resource Board.

(*1*) ''Final Regulation Order, Regulation for Reducing Emissions from Consumer Products,'' Subchapter 8.5 (Consumer Products), Article 2 (Consumer Products), amended March 15, 2013.

(445) A plan revision submitted on December 21, 2010 by the Governor's Designee.

(i) [Reserved]

(ii) *Additional materials.* (A) State of California Air Resources Board.

(1) California Air Resources Board Resolution No. 10–35, adopted November 18, 2010.

(B) Imperial County Air Pollution Control District.

(*1*) Imperial County Air Pollution Control Board, Minute Order No. 15, adopted July 13, 2010.

(*2*) Chapter 4—Emission Inventory, in ''Imperial County 2009 1997 8-Hour Ozone Modified Air Quality Management Plan'', adopted on July 13, 2010.

(446) A plan was submitted on May 23, 2013, by the Governor's designee.

(i) [Reserved]

(ii) *Additional materials.* (A) Feather River Air Quality Management District (FRAQMD).

(1) Yuba City-Marysville $PM_{2.5}$ Redesignation Request and Maintenance Plan, including motor vehicle emissions budgets (MVEBs) and attainment year emission inventory, dated April 1, 2013.

(2) FRAQMD Board of Directors Resolution 2013–01, dated April 1, 2013. ''Resolution Adopting the $PM_{2.5}$ Redesignation Request and Maintenance Plan,'' including attainment year emissions inventory and MVEBs for 2017 and 2024.

(B) State of California Air Resources Board (CARB).

(1) CARB Resolution Number 13–14, dated April 25, 2013. ''Yuba City-Marysville $PM_{2.5}$ Maintenance Plan and Redesignation Request.''

(*2*) CARB Resolution Number 14–6, dated February 20, 2014. ''Minor Updates to Yuba City-Marysville $PM_{2.5}$ Maintenance Plan and Redesignation Request.''

(447) New and amended regulations were submitted on July 25, 2014, by the Governor's designee.

(i) *Incorporation by Reference.* (A) Feather River Air Quality Management District.

(*1*) Rule 3.17 (except specific provisions of subsections E.8, F.2 and F.4), ''Wood Heating Devices,'' amended on October 5, 2009.

(B) San Joaquin Valley Unified Air Pollution Control District.

(*1*) Rule 4307, ''Boilers, Steam Generators, and Process Heaters—2.0 MMBtu/hr to 5.0 MMBtu/hr,'' amended on May 19, 2011.

(*2*) Previously approved on February 12, 2015 in paragraph (c)(447)(i)(B)(*1*) of this section and now deleted with replacement in (c)(488)(i)(C)(*1*), Rule 4307, ''Boilers, Steam Generators, and Process Heaters—2.0 MMBtu/hr to 5.0 MMBtu/hr,'' amended on May 19, 2011.

(C) South Coast Air Quality Management District.

(*1*) Rule 1155, ''Particulate Matter (PM) Control Devices,'' amended on May 2, 2014.

(D) Eastern Kern Air Pollution Control District.

(*1*) Rule 432, ''Polyester Resin Operations,'' adopted on March 13, 2014.

(*2*) Rule 410.4, ''Metal, Plastic, and Pleasure Craft Parts and Products Coating Operations,'' amended on March 13, 2014.

(*3*) Rule 410.8, ''Aerospace Assembly and Coating Operations,'' adopted on March 13, 2014.

(*4*) Rule 410.9, ''Wood Products Surface Coating Operations,'' adopted on March 13, 2014.

(*5*) Rule 410.4A, ''Motor Vehicle and Mobile Equipment Refinishing Operations,'' amended on March 13, 2014.

(448) New and amended regulations were submitted on August 15, 2014, by the Governor's designee.

(i) *Incorporation by Reference.* (A) Feather River Air Quality Management District.

(*1*) Rule 2.0, ''Open Burning,'' amended on October 6, 2008.

(449) New and amended regulations for the following APCDs were submitted on July 18, 2014 by the Governor's designee.

(i) [Reserved]

(ii) *Additional material.* (A) Ventura County Air Pollution Control District.

(*1*) Reasonably Available Control Technology State Implementation Plan Revision (2014 RACT SIP) as adopted on June 10, 2014 (''2014 RACT SIP'').

(B) Placer County Air Pollution Control District.

(*1*) 2014 Reasonably Available Control Technology State Implementation Plan Analysis, as adopted on April 10, 2014.

(C) South Coast Air Quality Management District.

(*1*) South Coast Air Quality Management District, ''2016 AQMP Reasonably Available Control Technology (RACT) Demonstration,'' dated May 22, 2014.

(450) The following plan was submitted on February 24, 2006 by the Governor's designee.

(i) [Reserved]

(ii) *Additional materials.* (A) Sacramento Metro 1997 Eight-Hour Ozone Planning Area.

(*1*) *Sacramento Regional Nonattainment Area 8-Hour Ozone Rate-of-Progress Plan,* Final Draft, December 2005.

(451) The following plan was submitted on April 17, 2009 by the Governor's designee.

(i) [Reserved]

(ii) *Additional materials.* (A) Sacramento Metro 1997 Eight-Hour Ozone Planning Area.

(*1*) *Sacramento Regional 8-Hour Ozone Attainment and Reasonable Further Progress Plan (With Errata Sheets Incorporated),* March 26, 2009 (Reasonable further progress demonstration and related contingency demonstration for milestone year 2011 as presented in chapter 13 (''Reasonable Further Progress Demonstrations'') only).

(452) The following plan was submitted on December 31, 2013 by the Governor's designee.

(i) [Reserved]

(ii) *Additional materials.* (A) Sacramento Metro 1997 Eight-Hour Ozone Planning Area.

(*1*) *Sacramento Regional 8-Hour Ozone Attainment and Reasonable Further Progress Plan (2013 SIP Revisions),* September 26, 2013, including appendices.

(*2*) Supplemental information, titled ''Sacramento Federal Ozone Nonattainment Area, July 24, 2014,'' for Appendix F–1 (''Vehicle Miles Traveled Offset Demonstration'') of the *Sacramento Regional 8-Hour Ozone Attainment and Reasonable Further Progress Plan (2013 SIP Revisions).*

(453) New and amended regulations for the following APCDs were submitted on May 12, 2011.

(i) *Incorporation by reference.* (A) Monterey Bay Unified Air Pollution Control District.

(1) Rule 207, ''Review of New or Modified Sources,'' revised on April 20, 2011.

(454) The following plan was submitted on June 16, 2014, by the Governor's Designee.

(i) [Reserved]

(ii) *Additional materials.* (A) California Air Resources Board (CARB).

(*1*) CARB Resolution 14–15, dated May 22, 2014, approving the ''California Regional Haze Plan 2014 Progress Report.''

(*2*) The ''California Regional Haze Plan 2014 Progress Report'', adopted on May 22, 2014.

(455) New and amended regulations for the following APCDs were submitted on June 26, 2013.

(i) *Incorporation by reference.* (A) San Joaquin Valley Unified Air Pollution Control District.

(*1*) Rule 9610, ''State Implementation Plan Credit for Emission Reductions Generated through Incentive Programs,'' adopted on June 20, 2013.

(456) New and amended regulations for the following APCDs were submitted on February 7, 2008 by the Governor's designee.

(i) [Reserved]

(ii) *Additional Material*. (A) Northern Sierra Air Quality Management District.

(*1*) Reasonably Available Control Technology (RACT) State Implementation Plan (SIP) Revision for Western Nevada County 8-Hour Ozone Non-Attainment Area as adopted on June 25, 2007.

(457) New and amended regulations for the following APCDs were submitted on November 6, 2014 by the Governor's designee.

(i) *Incorporation by reference*. (A) Feather River Air Quality Management District.

(*1*) Rule 10.9, ''Rice Straw Emission Reduction Credits and Banking,'' amended on October 6, 2014.

(*2*) Rule 3.22, ''Stationary Internal Combustion Engines,'' amended on October 6, 2014.

(*3*) Rule 3.8, ''Gasoline Dispensing Facilities,'' amended on June 2, 2014.

(*4*) Rule 10.1, ''New Source Review,'' amended on October 6, 2014.

(*5*) Rule 3.15, ''Architectural Coatings,'' amended on August 4, 2014.

(B) Mojave Desert Air Quality Management District.

(*1*) Rule 464, ''Oil-Water Separators,'' amended on June 23, 2014.

(C) Butte County Air Quality Management District.

(*1*) Rule 101, ''Definitions,'' amended on April 24, 2014.

(*2*) Rule 400, ''Permit Requirements,'' amended on April 24, 2014.

(*3*) Rule 401, ''Permit Exemptions,'' amended on April 24, 2014.

(*4*) Rule 432, ''Federal New Source Review,'' amended on April 24, 2014.

(*5*) Rule 433, ''Rice Straw Emission Reduction Credits,'' amended on April 24, 2014.

(D) San Luis Obispo County Air Pollution Control District.

(*1*) Rule 222, ''Federal Emission Statement,'' adopted on May 28, 2014.

(E) South Coast Air Quality Management District.

(*1*) Rule 1130, ''Graphic Arts,'' amended on May 2, 2014.

(F) Antelope Valley Air Quality Management District.

(*1*) Rule 701, ''Air Pollution Emergency Contingency Actions,'' amended on April 15, 2014.

(G) Santa Barbara County Air Pollution Control District.

(*1*) Rule 323.1, ''Architectural Coatings,'' adopted on June 19, 2014.

(H) San Joaquin Valley Unified Air Pollution Control District.

(*1*) Rule 4901, ''Wood Burning Fireplaces and Wood Burning Heaters,'' amended on September 18, 2014.

(I) Great Basin Unified Air Pollution Control District.

(*1*) Rule 431, Particulate Emissions (except paragraphs M and N), revised May 5, 2014.

(*2*) Town of Mammoth Lakes Municipal Code Chapter 8.30, Particulate Emissions Regulations (except paragraphs 8.30.110 and 8.30.120), as adopted in Ordinance Number 14–06, June 4, 2014.

(458) New and amended regulations for the following APCDs were submitted on December 29, 2014 by the Governor's designee.

(i) *Incorporation by Reference*. (A) South Coast Air Quality Management District.

(*1*) Rule 1325, Rule 1325, ''Federal $PM_{2.5}$ New Source Review Program'' adopted on December 5, 2014.

(459) The following plan revision was submitted on September 29, 2014, by the Governor's designee.

(i) [Reserved]

(ii) *Additional Material*. (A) Feather River Air Quality Management District.

(*1*) Reasonably Available Control Technology Analysis and Negative Declarations (''2014 RACT SIP''), as adopted on August 4, 2014.

(460) The following plan revision was submitted on September 29, 2014, by the Governor's designee.

(i) [Reserved]

(ii) *Additional Material*. (A) Feather River Air Quality Management District.

(*1*) Reasonably Available Control Technology Analysis and Negative Declarations (''2014 RACT SIP''), as adopted on August 4, 2014.

(461) New and amended regulations were submitted on April 7, 2015 by the Governor's designee.

(i) *Incorporation by Reference.* (A) Monterey Bay Unified Air Pollution Control District.

(*1*) Rule 1002, ''Transfer of Gasoline into Vehicle Fuel Tanks,'' revised on December 17, 2014.

(B) Ventura County Air Pollution Control District.

(*1*) Rule 74.33, ''Liquefied Petroleum Gas Transfer or Dispensing,'' adopted on January 13, 2015.

(C) South Coast Air Quality Management District.

(*1*) Rule 1151, ''Motor Vehicle and Mobile Equipment Non-Assembly Line Coating Operations,'' amended on September 5, 2014.

(*2*) Rule 1111, ''Reduction of NO_X Emissions From Natural-Gas-Fired, Fan-Type Central Furnaces,'' amended September 5, 2014.

(*3*) Rule 1153.1, ''Emissions of Oxides of Nitrogen from Commercial Food Ovens,'' adopted on November 7, 2014.

(D) San Joaquin Valley Unified Air Pollution Control District.

(*1*) Rule 4905, ''Natural-Gas-Fired, Fan-Type Central Furnaces,'' amended January 22, 2015.

(462) The following plan was submitted on October 21, 2014, by the Governor's designee.

(i) [Reserved]

(ii) *Additional Materials.* (A) Great Basin Unified Air Pollution Control District (GBUAPCD).

(*1*) ''2014 Air Quality Maintenance Plan and Redesignation Request for the Town of Mammoth Lakes'' (Mammoth Lakes PM_{10} Maintenance Plan), adopted on May 5, 2014.

(*2*) GBUAPCD Board Order #140505–03 adopting the Mammoth Lakes PM_{10} Maintenance Plan, dated May 5, 2014.

(B) State of California Air Resources Board (CARB).

(*1*) CARB Resolution 14–27 adopting the redesignation request and Mammoth Lakes PM_{10} Maintenance Plan, dated September 18, 2014.

(463) Amended regulations for the following APCDs were submitted on June 26, 2015 by the Governor's designee.

(i) *Incorporation by reference.* (A) Placer County Air Pollution Control District.

(*1*) Rule 515, ''Stationary Rail Yard Control Emission Reduction Credits,'' amended on February 19, 2015.

(B) Yolo-Solano Air Quality Management District.

(*1*) Rule 2.26, ''Motor Vehicle and Mobile Equipment Coating Operations,'' revised on December 10, 2008.

(*2*) Rule 2.22, ''Gasoline Dispensing Facilities,'' revised on January 14, 2015.

(*3*) Rule 2.34, ''Stationary Gas Turbines,'' revised on November 12, 2014.

(464) The following plan was submitted on December 21, 2010 by the Governor's designee.

(i) [Reserved]

(ii) *Additional Material.* (A) Imperial County Air Pollution Control District.

(*1*) Final 2009 Reasonably Available Control Technology State Implementation Plan (''2009 RACT SIP'') as adopted on July 13, 2010.

(465) New regulation for the following APCD was submitted on July 15, 2015 by the Governor's designee.

(i) *Incorporation by reference.* (A) Placer County Air Pollution Control District.

(*1*) ''Ozone Emergency Episode Plan,'' adopted on June 11, 2015.

(466) The following plan was submitted on October 6, 2011, by the Governor's Designee.

(i) [Reserved].

(ii) Additional materials.

(A) California Air Resources Board (CARB).

(*1*) CARB Resolution 11–28, dated September 22, 2011, adopting the ''Proposed State Implementation Plan Revision for Federal Lead Standard Infrastructure Requirements.''

(*2*) ''Proposed State Implementation Plan Revision for Federal Lead Standard Infrastructure Requirements,'' (''2011 Pb Infrastructure SIP'').

(467) The following plan was submitted on December 12, 2012, by the Governor's Designee.

(i) [Reserved].

(ii) *Additional materials.* (A) California Air Resources Board (CARB).

(*1*) CARB Resolution 12–32, dated November 15, 2012, adopting the ''Proposed State Implementation Plan Revision for Federal Nitrogen Dioxide Standard Infrastructure Requirements.''

(*2*) ''Proposed State Implementation Plan Revision for Federal Nitrogen Dioxide Standard Infrastructure Requirements,'' (''2012 NO_2 Infrastructure SIP'').

(468) The following plan was submitted on March 6, 2014, by the Governor's Designee.

(i) Incorporation by Reference. (A) California Air Resources Board

(*1*) California Government Code, Title 9 (Political Reform), Chapter 2 (Definitions), Section 82048, ''Public official,'' added by California Initiative Measure approved on June 4, 1974, effective January 7, 1975, and last amended in 2004.

(*2*) California Government Code, Title 9 (Political Reform), Chapter 7 (Conflicts of Interest), Article 1 (General Prohibition), Section 87103, ''Financial interest in decision by public official,'' added by California Initiative Measure approved on June 4, 1974, effective January 7, 1975, and last amended in 2000.

(*3*) California Government Code, Title 9 (Political Reform), Chapter 7 (Conflicts of Interest), Article 3 (Conflict of Interest Codes), Section 87302, ''Required provisions; exemptions,'' added by California Initiative Measure approved on June 4, 1974, effective January 7, 1975, and last amended in 1992.

(*4*) Title 2, California Code of Regulations, Division 6 (Fair Political Practices Commission), Chapter 7 (Conflict of Interest), Article 1 (Conflicts of Interest; General Prohibition), Section 18700, ''Basic Rule and Guide to Conflict of Interest Regulations'' (filed on December 17, 1976, effective upon filing, and last amendment filed on December 20, 2005, operative January 19, 2006).

(*5*) Title 2, California Code of Regulations, Division 6 (Fair Political Practices Commission), Chapter 7 (Conflict of Interest), Article 1 (Conflicts of Interest; General Prohibition), Section 18701, ''Definitions: Source of Income, Commission Income and Incentive Income'' (filed on January 22, 1976, effective February 21, 1976, and last amendment filed on December 29, 2005, operative January 28, 2006).

(ii) *Additional materials.* (A) California Air Resources Board (CARB).

(*1*) CARB Resolution 14–1, dated January 23, 2014, adopting the ''California Infrastructure SIP.''

(*2*) ''California Infrastructure SIP,'' (''2014 Multi-pollutant Infrastructure SIP'').

(469) The following plan was submitted on June 2, 2014, by the Governor's Designee.

(i) Incorporation by Reference. (A) Great Basin Unified Air Pollution Control District.

(*1*) Rule 701, ''Air Pollution Episode Plan for Particulate Matter,'' adopted on March 3, 2014.

(470) The following plan was submitted on December 20, 2013 by the Governor's designee.

(i) [Reserved]

(ii) *Additional materials.* (A) California Air Resources Board.

(*1*) Letter and enclosures from Lynn Terry, Deputy Executive Officer, California Air Resources Board, dated June 19, 2014, providing supplemental information related to Appendix D (''VMT Emissions Offset Demonstration'') of the San Joaquin Valley 2013 Plan for the Revoked 1-Hour Ozone Standard, excluding EMFAC2011 output files.

(B) San Joaquin Valley Unified Air Pollution Control District.

(*1*) 2013 Plan for the Revoked 1-Hour Ozone Standard, adopted by the San Joaquin Valley Unified Air Pollution Control District on September 19, 2013 and approved by the California Air Resources Board on November 21, 2013, excluding section 4.4 (''Contingency Reductions'').

(471) The following plan was submitted on March 4, 2015, by the Governor's Designee.

(i) [Reserved]

(ii) *Additional material.* (A) South Coast Air Quality Management District.

(*1*) ''2015 Supplement to the 24-Hour $PM_{2.5}$ State Implementation Plan for the South Coast Air Basin'' (February 2015), excluding Attachment C (''New Transportation Conformity Budgets for 2015''). SCAQMD's commitments to adopt and implement specific rules and measures in accordance with the schedule provided in Chapter 4 of the 2012 $PM_{2.5}$ Plan as modified by Table F–1 in Attachment F to the 2015 Supplement, to achieve the emissions reductions shown therein, and to submit these rules and measures to CARB within 30 days of adoption for transmittal to

EPA as a revision to the SIP, as stated on pp. 7–8 of SCAQMD Governing Board Resolution 12–19 and modified by SCAQMD Governing Board Resolution 15–3, excluding all commitments pertaining to control measure IND–01 (Backstop Measures for Indirect Sources of Emissions from Ports and Port-Related Facilities).

(*2*) SCAQMD Governing Board Resolution No. 15–3, dated February 6, 2015.

(B) State of California Air Resources Board.

(*1*) CARB Resolution 15–2, dated February 19, 2015, ''Minor Revision to the South Coast Air Basin 2012 $PM_{2.5}$ State Implementation Plan.''

(472) New and amended regulations were submitted on November 13, 2015, by the Governor's designee.

(i) *Incorporation by reference.* (A) Yolo-Solano Air Quality Management District.

(*1*) Rule 1.1, General Provisions and Definitions, revised July 8, 2015.

(B) Ventura County Air Pollution Control District.

(*1*) Rule 74.15.1, ''Boilers, Steam Generators, and Process Heaters,'' revised June 23, 2015.

(C) San Diego Air Pollution Control District.

(*1*) Rule 67.0.1, ''Architectural Coatings,'' adopted on June 24, 2015.

(473) A new regulation for the following AQMD was submitted on April 6, 2016 by the Governor's designee.

(i) *Incorporation by reference.* (A) El Dorado County Air Quality Management District.

(*1*) ''Ozone Emergency Episode Plan,'' adopted January 12, 2016.

(474) New and amended regulations were submitted on March 11, 2016, by the Governor's designee.

(i) *Incorporation by reference.* (A) Placer County Air Pollution Control District.

(*1*) Rule 250, ''Stationary Gas Turbines,'' amended on October 8, 2015.

(B) Sacramento Metropolitan Air Quality Management District.

(*1*) Rule 442, ''Architectural Coatings,'' amended on September 24, 2015.

(C) Butte County Air Quality Management District

(*1*) Rule 300, ''Open Burning Requirements, Prohibitions and Exemptions'' amended on August 27, 2015.

(D) Ventura County Air Pollution Control District.

(*1*) Rule 26.13, ''New Source Review—Prevention of Significant Deterioration (PSD),'' revised on November 10, 2015.

(475) A new plan for the following AQMD was submitted January 21, 2009 by the Governor's designee.

(i) [Reserved]

(ii) *Additional Material.* (A) Sacramento Metropolitan Air Quality Management District.

(*1*) Reasonably Available Control Technology (RACT) Update as Applicable to the 8-Hour Ozone Standard, dated October 23, 2008, adopted October 23, 2008.

(476) The following revision was submitted on November 13, 2015 by the Governor's designee.

(i) [Reserved]

(ii) *Additional materials.* (A) California Air Resources Board.

(*1*) Attachment A to Resolution 15–50, ''Updates to the Transportation Conformity Budgets for the San Joaquin Valley 2007 PM_{10}, 2007 Ozone and 2012 $PM_{2.5}$ SIPs,'' Table A–1 (Updated Transportation Conformity Budgets for the 2008 Ozone Plan (Tons per summer day) and Table A–3 (Updated Transportation Conformity Budgets for the 2008 PM_{10} Maintenance Plan (Tons per annual day)).

(*2*) Attachment A to Resolution 15–50, ''Updates to the Transportation Conformity Budgets for the San Joaquin Valley 2007 $PM_{10,}$ 2007 Ozone and 2012 $PM_{2.5}$ SIPs,'' Table A–2 (Updated Transportation Conformity Budgets for the 2012 $PM_{2.5}$ Plan (Tons per winter day).

(477) The following plan revision was submitted on November 17, 2014 by the Governor's designee.

(i) [Reserved]

(ii) *Additional Material.* (A) California Air Resources Board.

(*1*) ''Report on Reductions Achieved from Incentive-based Emission Reduction Measures in the San Joaquin Valley,'' adopted on October 24, 2014, including appendices F–H.

(478) The following plan was submitted on March 4, 2013, by the Governor's Designee.

(i) [Reserved]

(ii) *Additional materials.* (A) San Joaquin Valley Unified Air Pollution Control District.

(*1*) ''2012 $PM_{2.5}$ Plan'' (dated December 20, 2012), adopted December 20, 2012, except for the motor vehicle emission budgets used for transportation conformity purposes.

(*2*) SJVUAPCD Governing Board Resolution No. 12–12–19, dated December 20, 2012, ''In the Matter of Adopting the San Joaquin Valley Unified Air Pollution Control District *2012 $PM_{2.5}$ Plan.*''

(*3*) SJVUAPCD's commitments to adopt and implement specific rules and measures by the dates specified in Chapter 5 of the 2012 $PM_{2.5}$ Plan to achieve the emissions reductions shown therein, and to submit these rules and measures to CARB within 30 days of adoption for transmittal to EPA as a revision to the SIP, or if the total emission reductions from the adopted rules are less than those committed to in the Plan, to adopt, submit, and implement substitute rules that will achieve equivalent reductions in emissions of direct $PM_{2.5}$ or $PM_{2.5}$ precursors in the same adoption and implementation timeframes or in the timeframes needed to meet CAA milestones, as stated on p. 4 of SJVUAPCD Governing Board Resolution 12–12–19, dated December 20, 2012.

(B) California Air Resources Board.

(*1*) CARB Resolution 13–2, dated January 24, 2013, ''San Joaquin Valley $PM_{2.5}$ State Implementation Plan.''

(479) The following plan was submitted on November 6, 2014, by the Governor's Designee.

(i) [Reserved]

(ii) *Additional materials.* (A) San Joaquin Valley Unified Air Pollution Control District.

(*1*) ''Supplemental Document, Clean Air Act Subpart 4: The 2012 $PM_{2.5}$ Plan for the 2006 $PM_{2.5}$ Standard and District Rule 2201 (New and Modified Stationary Source Review)'' (dated September 18, 2014), adopted September 18, 2014.

(*2*) SJVUAPCD Governing Board Resolution No. 14–09–01, dated September 18, 2014, ''In the Matter of: Authorizing Submittal of ''Supplemental Document for the 2012 $PM_{2.5}$ Plan'' to EPA.''

(B) California Air Resources Board.

(*1*) CARB Resolution 14–37, dated October 24, 2014, ''Supplemental Document for the San Joaquin Valley 24-Hour $PM_{2.5}$ State Implementation Plan.''

(480) New and amended regulations for the following AQMD was submitted on December 11, 2014 by the Governor's Designee.

(i) *Incorporation by Reference.* (A) Northern Sonoma County Air Pollution Control District.

(*1*) Rule 130, ''Definitions,'' adopted on November 14, 2014.

(*2*) Rule 200, ''Permit Requirements,'' adopted on November 14, 2014.

(*3*) Rule 220, ''New Source Review,'' adopted on November 14, 2014.

(*4*) Rule 230, ''Action on Applications,'' adopted on November 14, 2014.

(481) The following revision was submitted on July 17, 2014 by the Governor's designee.

(i) [Reserved]

(ii) *Additional materials.* (A) California Air Resources Board.

(*1*) California Air Resources Board, Staff Report, ''8-Hour Ozone State Implementation Plan Emission Inventory Submittal,'' release date: May 23, 2014, excluding the tables of 2012 average summer daily emissions (tons per day) other than the tables for Chico (Butte County), San Luis Obispo County (Eastern San Luis Obispo), Calaveras County, and San Francisco Bay Area.

(482) New regulations for the following APCDs were submitted on September 5, 2014 by the Governor's designee.

(i) *Incorporation by reference.* (A) South Coast Air Quality Management District.

(*1*) Rule 2449, ''Control of Oxides of Nitrogen Emissions from Off-Road Diesel Vehicles,'' amended on July 11, 2014.

(483) The following plan was submitted on June 9, 2016, by the Governor's designee.

(i) *Incorporation by Reference.* (A) Great Basin Unified Air Pollution Control District.

(*1*) Rule 433, ''Control of Particulate Emissions at Owens Lake,'' adopted on April 13, 2016.

(ii) *Additional materials.* (A) Great Basin Unified Air Pollution Control District (GBUAPCD).

(*1*) ''2016 Owens Valley Planning Area PM_{10} State Implementation Plan,'' adopted April 13, 2016, excluding all of the following: Section 10.1 (''Proposed Rule 433''); Appendix I–1 (''2006 Settlement Agreement''); Appendix II–1 (''2014 Stipulated Judgement''); Appendices D (''2008 GBUAPCD Board Order No. 080128–01''), E (''2013 GBUAPCD Board Order No. 130916–01''), and F (''GBUAPCD Fugitive Dust Rules (400, 401, 402)'') of Appendix V–1 (''Owens Valley Planning Area 2016 State Implementation Plan BACM Assessment); Appendix VI–2 (''Owens Lake Dust Mitigation Program Phase 9/10 Project—Final Environmental Impact Report (May 2015)''); and Appendix X–1 (''Proposed Rule 433'').

(484) The following plan was submitted on January 9, 2015, by the Governor's designee.

(i) [Reserved]

(ii) *Additional materials*. (A) Imperial County Air Pollution Control District.

(*1*) ''Imperial County 2013 State Implementation Plan for the 2006 24-Hour $PM_{2.5}$ Moderate Nonattainment Area,'' adopted December 2, 2014, Chapter 3 (''Emissions Inventory'') excluding: Section 3.4.1 (''Determination of Significant Sources of $PM_{2.5}$ Precursors''); Section 3.4.2 (''Determination of Significant Sources of $PM_{2.5}$''); the 2011 and 2012 winter and annual average inventories in Table 3.1 (''$PM_{2.5}$ Emissions Inventory by Major Source Category 2008, 2011 and 2012 Winter and Annual Planning Emissions Inventories''); the 2011 and 2012 winter and annual average inventories in Table 3.7 (''NO_X Emissions Inventory by Major Source Category 2008, 2011 and 2012 Winter and Annual Planning Emissions Inventories''); the 2011 and 2012 winter and annual average inventories in Table 3.8 (''VOCs Emissions Inventory by Major Source Category 2008, 2011 and 2012 Winter and Annual Planning Emissions Inventories''); the 2011 and 2012 winter and annual average inventories in Table 3.9 (''SO_X Emissions Inventory by Major Source Category 2008, 2011 and 2012 Winter and Annual Planning Emissions Inventories''); and the 2011 and 2012 winter and annual average inventories in Table 3.10 (''Ammonia Emissions Inventory by Major Source Category 2008, 2011 and 2012 Winter and Annual Planning Emissions Inventories'').

(485) New and amended regulations were submitted on April 21, 2016 by the Governor's designee.

(i) *Incorporation by reference*. (A) Imperial County Air Pollution Control District.

(*1*) Rule 101, ''Definitions,'' revised February 9, 2016.

(*2*) Rule 202, ''Exemptions,'' revised February 9, 2016.

(*3*) Rule 217, ''Large Confined Animal Facilities (LCAF) Permits Required,'' revised February 9, 2016.

(B) Mojave Desert Air Quality Management District.

(*1*) Rule 1118, ''Aerospace Assembly, Rework and Component Manufacturing Operations,'' amended on October 26, 2015.

(486) The following plan was submitted on November 6, 2014, by the Governor's designee.

(i) [Reserved]

(ii) *Additional materials*. (A) California Air Resources Board.

(*1*) California Air Resources Board, Staff Report, Proposed Updates to the 1997 8-Hour Ozone Standard, State Implementation Plans; Coachella Valley and Western Mojave Desert (excluding section III (pp. 8–12), Table A–2, Table B–2, Table C–2, the bottom row of Table E–1, Table E–3 and accompanying discussion of Western Mojave Desert ROG calculations on p. E–7, and Figure E–2 (regarding Western Mojave Desert); Table B–3 (regarding contingency measures); and Appendix D (regarding transportation conformity budgets)), adopted on October 24, 2014.

(*2*) California Air Resources Board, Staff Report, Proposed Updates to the 1997 8-Hour Ozone Standard, State Implementation Plans; Coachella Valley and Western Mojave Desert, adopted on October 24, 2014: ''Reasonable Further Progress Demonstration Update,'' at p. 10 (excluding those portions that pertain to reasonable further progress targets after 2011); Table A–2 (excluding pp. A–10 through A–12, and those portions that pertain to reasonable further progress targets after 2011); Table C–2 (excluding those portions that pertain to reasonable further progress targets after 2011).

(487) New and amended regulations were submitted on September 6, 2016 by the Governor's designee.

(i) *Incorporation by reference.* (A) Northern Sierra Air Quality Management District.

(*1*) Rule 513, ''Emissions Statements and Recordkeeping,'' amended on June 27, 2016.

(*2*) [Reserved]

(488) New and amended regulations were submitted on April 21, 2016 by the Governor's designee.

(i) *Incorporation by reference.* (A) San Diego County Air Pollution Control District.

(*1*) Regulation 1, Rule 2, ''Definitions,'' Rev. Adopted and Effective on June 30, 1999, Table 1—Exempt Compounds: Rev. and Effective on June 14, 2016.

(*2*) Rule 67.12.1, ''Polyester Resin Operations,'' adopted and effective on May 11, 2016.

(B) San Joaquin Valley Unified Air Pollution Control District.

(*1*) Rule 4307, ''Boilers, Steam Generators, and Process Heaters—2.0 MMBtu/hr to 5.0 MMBtu/hr,'' amended on April 21, 2016.

(C) Sacramento Metropolitan Air Quality Management District.

(*1*) Rule 464, ''Organic Chemical Manufacturing Operations,'' amended on April 28, 2016.

(489) Amended regulations for the following AQMD was submitted on November 15, 2016 by the Governor's Designee.

(i) *Incorporation by Reference.* (A) Mendocino County Air Quality Management District.

(*1*) Regulation I, Rule 1–130, ''Definitions,'' amended on September 20, 2016.

(*2*) Regulation I, Rule 1–200, ''Permit Requirements,'' amended on September 20, 2016.

(*3*) Regulation I, Rule 1–220, ''New Source Review Standards (Including PSD Evaluations),'' amended on September 20, 2016.

(*4*) Regulation I, Rule 1–230, ''Action on Applications,'' amended on September 20, 2016.

(490) An amended regulation was submitted on January 21, 2014 by the Governor's designee.

(i) *Incorporation by reference.* (A) Imperial County Air Pollution Control District.

(*1*) Rule 207, ''Federal New Source Review,'' revised on October 22, 2013.

(491) Amended regulations for the following APCDs were submitted on March 17, 2017 by the Governor's designee.

(i) *Incorporation by reference.* (A) South Coast Air Quality Management District.

(*1*) Rule 2001, ''Applicability,'' amended on December 4, 2015.

(*2*) Rule 2002, ''Allocations for Oxides of Nitrogen (NO_X) and Oxides of Sulfur (SO_X),'' amended on October 7, 2016.

(*3*) Rule 2005, ''New Source Review for RECLAIM,'' amended on December 4, 2015.

(*4*) Protocol for Rule 2011: Attachment C, ''Quality Assurance and Quality Control Procedures,'' amended on December 4, 2015.

(*5*) Protocol for Rule 2011: Chapter 3, ''Process Units—Periodic Reporting,'' amended on December 4, 2015.

(*6*) Protocol for Rule 2012: Attachment C, ''Quality Assurance and Quality Control Procedures,'' amended on December 4, 2015.

(*7*) Protocol for Rule 2012: Chapter 4, ''Process Units Periodic Reporting and Rule 219 Equipment,'' amended on December 4, 2015.

(*8*) Protocol for Rule 2011: Attachment E, ''Definitions,'' amended on February 5, 2016.

(*9*) Protocol for Rule 2012: Attachment F, ''Definitions,'' amended on February 5, 2016.

(492) The following plan revisions were submitted on July 27, 2017 by the Governor's designee.

(i) *Incorporation by reference.* (A) South Coast Air Quality Management District.

(*1*) Appendix A to the Supplemental RACM/RACT Analysis for the NO_X RECLAIM Program, Facility Permit to Operate, 63500 19th Ave., North Palm Springs, CA 92258, title page, table of contents, section A (page 1), and section D (pages 1–21), adopted on July 7, 2017.

(*2*) Appendix B to the Supplemental RACM/RACT Analysis for the NO_X RECLAIM Program, Facility Permit to Operate, 15775 Melissa Land Rd, North

Palm Springs, CA 92258, title page, table of contents, section A (page 1), and section D (pages 1–49), adopted on July 7, 2017.

(ii) *Additional materials.* (A) South Coast Air Quality Management District.

(*1*) Attachment B (''Supplemental RACM/RACT Analysis for the NO_X RECLAIM Program (May 2017)''), excluding Appendices A and B.

(*2*) Attachment C (''Negative Declaration for Control Techniques Guidelines of Surface Coating Operations at Shipbuilding and Repair Facilities, and Paper, Film and Foil Coatings (May 2017)'').

(493) The following plan was submitted by on October 23, 2015 by the Governor's designee.

(i) [Reserved]

(ii) *Additional materials.* (A) Antelope Valley Air Quality Management District.

(*1*) 8-Hour Reasonably Available Control Technology—State Implementation Plan Analysis (RACT SIP Analysis), July 2015, adopted on July 21, 2015.

(*2*) Antelope Valley Air Quality Management District Federal Negative Declaration (8 hr Ozone Standard) for Twenty CTG Source Categories, signed June 15, 2015 and adopted on July 21, 2015.

(494) The following plan revision was submitted on June 7, 2017 by the Governor's designee.

(i) [Reserved]

(ii) *Additional materials.* (A) Antelope Valley Air Quality Management District.

(*1*) Antelope Valley Air Quality Management District Federal Negative Declaration (8-hour Ozone Standards) for Seven Control Techniques Guideline Source Categories, signed October 19, 2016 and adopted on December 20, 2016.

(*2*) [Reserved]

(495) The following plan was submitted on November 10, 1993 by the Governor's designee.

(i) [Reserved]

(ii) *Additional material.* (A) California Air Resources Board.

(*1*) Letter and attachments from James D. Boyd, Executive Officer, California Air Resources Board, to Felicia Marcus, Regional Administrator, EPA Region IX, November 10, 1993.

(496) The following plan was submitted on August 24, 2016, by the Governor's Designee.

(i) [Reserved]

(ii) *Additional materials.* (A) California Air Resources Board (CARB).

(*1*) CARB Resolution 16–8, dated July 21, 2016, adopting the ''2016 Ozone State Implementation Plan for the San Joaquin Valley.''

(*2*) ''Staff Report, ARB Review of the San Joaquin Valley 2016 Plan for the 2008 8-Hour Ozone Standard,'' section V.H (''Bakersfield Area Monitor'') and Appendix C (''U.S. EPA Letter Regarding Arvin Site Relocation''), only.

(497) New and/or amended regulations for the following AQMDs were submitted on January 24, 2017 by the Governor's designee.

(i) *Incorporation by reference.* (A) Sacramento Metropolitan Air Quality Management District.

(*1*) Permit to Operate for the Kiefer Landfill (''Permit to Operate No. 24360—Air Pollution Control Landfill Gas Flare No. 1, Enclosed Type'') with Attachment A, as reissued on April 14, 2016.

(*2*) Permit to Operate for the Kiefer Landfill (''Permit to Operate No. 24361—Air Pollution Control Landfill Gas Flare No. 2, Enclosed Type'') with Attachment A, as reissued on April 14, 2016.

(B) Placer County Air Pollution Control District.

(*1*) Rule 206, ''Incinerator Burning,'' amended on October 13, 2016.

(C) Northern Sierra Air Quality Management District.

(*1*) City of Portola.

(*i*) Ordinance No. 344, Portola Municipal Code, Chapter 15.10, ''Wood Stove and Fireplace Ordinance,'' adopted June 22, 2016, except paragraphs 15.10.060(B) and sections 15.10.090 and 15.10.100.

(D) Yolo-Solano Air Quality Management District.

(*1*) Rule 2.21, ''Organic Liquid Storage and Transfer,'' revised on September 14, 2016.

(498) New or amended regulations were submitted on February 24, 2017 by the Governor's designee.

(i) *Incorporation by Reference.* (A) Ventura County Air Pollution Control District.

(*1*) Rule 74.34, ''NO_X Reductions from Miscellaneous Sources,'' adopted on December 13, 2016.

(B) Mojave Desert Air Quality Management District.

(*1*) Rule 1106, ''Marine and Pleasure Craft Coating Operations,'' amended on October 24, 2016.

(499) The following plan was submitted on September 9, 2015 by the Governor's designee.

(i) [Reserved]

(ii) *Additional materials.* (A) Mojave Desert Air Quality Management District.

(*1*) 8-Hour Reasonably Available Control Technology—State Implementation Plan Analysis (RACT SIP Analysis), February 2015, adopted on February 23, 2015.

(*2*) Mojave Desert Air Quality Management District Federal Negative Declaration (8 hr Ozone Standard) for Nineteen CTG Categories, signed January 13, 2015 and adopted on February 23, 2015.

(B) [Reserved]

(500) The following plan was submitted on February 28, 2017 by the Governor's designee.

(i) *Incorporation by reference.* (A) Northern Sierra Air Quality Management District.

(*1*) Northern Sierra Air Quality Management District Resolution #2017–01, adopted January 23, 2017.

(*2*) [Reserved]

(B) [Reserved]

(ii) [Reserved]

(501) The following plan revision was submitted on February 22, 2018 by the Governor's designee.

(i) [Reserved]

(ii) *Additional materials.* (A) Yolo-Solano Air Quality Management District.

(*1*) Adoption of Four Negative Declarations; Resolution No. 18–01 adopted January 10, 2018.

(*2*) [Reserved]

(B) [Reserved]

(502) Amended regulations for the following APCD were submitted on December 14, 2017 by the Governor's Designee.

(i) *Incorporation by reference.* (A) Bay Area Air Quality Management District.

(*1*) Regulation 2, ''Permits,'' Rule 1, ''General Requirements,'' adopted on December 6, 2017; Regulation 2, ''Permits,'' Rule 2, ''New Source Review,'' adopted on December 6, 2017; and Regulation 2, ''Permits,'' Rule 4, ''Emissions Banking,'' adopted on December 6, 2017.

(*2*) [Reserved]

(B) [Reserved]

(ii) [Reserved]

(503) New and amended regulations for the following APCDs were submitted on August 9, 2017 by the Governor's designee.

(i) *Incorporation by reference.* (A) Antelope Valley Air Quality Management District.

(*1*) Rule 1151.1, ''Motor Vehicle Assembly Coating Operations,'' adopted on June 20, 2017.

(*2*) [Reserved]

(B) [Reserved]

(ii) [Reserved]

[37 FR 10850, May 31, 1972]

EDITORIAL NOTE: For FEDERAL REGISTER citations affecting § 52.220, see the List of CFR Sections Affected, which appears in the Finding Aids section of the printed volume and at *www.fdsys.gov*.

EFFECTIVE DATE NOTE: At 83 FR 26224, June 6, 2018, § 52.220 was amended by adding paragraphs (c)(457)(i)(C)(*6*) and (c)(504), effective July 6, 2018. For the convenience of the user, the added text is set forth as follows:

§ 52.220 Identification of plan-in part.

* * * * *

(c) * * *

(457) * * *

(i) * * *

(C) * * *

(*6*) Previously approved on December 22, 2016, in paragraph (c)(457)(i)(C)(*4*) of this section and now deleted with replacement in paragraph (c)(504)(i)(A)(*1*) of this section, Rule 432, ''Federal New Source Review'' amended on April 24, 2014.

* * * * *

(504) The following amended regulations were submitted on June 12, 2017, by the Governor's designee.

(i) *Incorporation by reference.* (A) Butte County Air Quality Management District.

(*1*) Rule 432, ''Federal New Source Review,'' amended on March 23, 2017.

(*2*) [Reserved]

(B) [Reserved]

(ii) [Reserved]

§ 52.220a Identification of plan—in part.

(a) *Purpose and scope*. This section sets forth a portion of the applicable State implementation plan for the State of California under section 110 of the Clean Air Act, 42 U.S.C. 7401–7671q and 40 CFR part 51 to meet national ambient air quality standards. This section identifies the state statutes and state regulations portion of the applicable California State implementation plan.

(b) *Incorporation by reference*. (1) Material listed in paragraph (c) and (d) of this section with an EPA approval date on or prior to April 1, 2016, was approved for incorporation by reference by the Director of the Federal Register in accordance with 5 U.S.C. 552(a) and 1 CFR part 51. Material is incorporated as it exists on the date of the approval, and notice of any change in the material will be published in the FEDERAL REGISTER. Entries in paragraphs (c) and (d) of this section with EPA approval dates after April 1, 2016 will be incorporated by reference in the next update to the SIP compilation.

(2) EPA Region IX certifies that the rules/regulations provided by EPA in the SIP compilation at the addresses in paragraph (b)(3) of this section are an exact duplicate of the officially promulgated State rules/regulations which have been approved as part of the State implementation plan as of April 1, 2016.

(3) Copies of the materials incorporated by reference may be inspected at the Region IX EPA Office at 75 Hawthorne Street, San Francisco, CA 94105; or the National Archives and Records Administration (NARA). For information on the availability of this material at NARA, call (202) 741–6030, or go to: *http://www.archives.gov/federal-register/cfr/ibr-locations.html*.

(c) *EPA-approved regulations*.

TABLE 1—EPA-APPROVED STATUTES AND STATE REGULATIONS [1]

State citation	Title/subject	State effective date	EPA approval date	Additional explanation
GOVERNMENT CODE				
Title 9 (Political Reform), Chapter 2 (Definitions)				
82048	Public official	1/1/2005	4/1/2016, 81 FR 18766	Added by California Initiative Measure approved on June 4, 1974, effective January 7, 1975, and last amended in 2004. Submitted on March 6, 2014. See 40 CFR 52.220(c)(468)(i)(A)(*1*).
Title 9 (Political Reform), Chapter 7 (Conflicts of Interest), Article 1 (General Prohibitions)				
87103	Financial interest in decision by public official.	1/1/2001	4/1/2016, 81 FR 18766	Added by California Initiative Measure approved on June 4, 1974, effective January 7, 1975, and last amended in 2000. Submitted on March 6, 2014. See 40 CFR 52.220(c)(468)(i)(A)(*2*).
Title 9 (Political Reform), Chapter 7 (Conflicts of Interest), Article 3 (Conflict of Interest Codes)				
87302	Required Provisions; exemptions.	1/1/1993	4/1/2016, 81 FR 18766	Added by California Initiative Measure approved on June 4, 1974, effective January 7, 1975, and last amended in 1992. Submitted on March 6, 2014. See 40 CFR 52.220(c)(468)(i)(A)(*3*).

TABLE 1—EPA-APPROVED STATUTES AND STATE REGULATIONS [1]—Continued

State citation	Title/subject	State effective date	EPA approval date	Additional explanation
HEALTH AND SAFETY CODE				
Division 26 (Air Resources Board), Part 4 (Nonvehicular Air Pollution Control), Chapter 3 (Emission Limitations), Article 5 (Gasoline Vapor Recovery)				
41950	Standards for stationary tanks.	1/1/1976	7/8/1982, 47 FR 29668	Submitted on April 23, 1980. See 40 CFR 52.220(c)(69)(iv). Added Stats. 1975 ch. 957 § 12.
41951	''Pressure tank'' defined.	1/1/1976	7/8/1982, 47 FR 29668	Submitted on April 23, 1980. See 40 CFR 52.220(c)(69)(iv). Added Stats. 1975 ch. 957 § 12.
41952	''Vapor recovery system'' defined.	1/1/1976	7/8/1982, 47 FR 29668	Submitted on April 23, 1980. See 40 CFR 52.220(c)(69)(iv). Former § 39068.4. Added Stats. 1975 ch. 957 § 12.
41953	''Floating roof'' defined.	1/1/1976	7/8/1982, 47 FR 29668	Submitted on April 23, 1980. See 40 CFR 52.220(c)(69)(iv). Former § 39068.5. Added Stats. 1975 ch. 957 § 12.
41954	Procedures; Standards; Certification; Testing; Fees.	9/28/1981	7/8/1982, 47 FR 29668	Submitted on April 23, 1980. See 40 CFR 52.220(c)(69)(iv). Stats. 1981 ch. 902 § 5.
41955	Submission of system for certification.	9/20/1976	7/8/1982, 47 FR 29668	Submitted on April 23, 1980. See 40 CFR 52.220(c)(69)(iv).
41956	Fire prevention and measurement standards.	9/28/1981	7/8/1982, 47 FR 29668	Submitted on April 23, 1980. See 40 CFR 52.220(c)(69)(iv).
41956.1	Revision of standards; Prohibited systems.	9/28/1981	7/8/1982, 47 FR 29668	Submitted on April 23, 1980. See 40 CFR 52.220(c)(69)(iv).
41957	Safety hazards	9/20/1976	7/8/1982, 47 FR 29668	Submitted on April 23, 1980. See 40 CFR 52.220(c)(69)(iv).
41958	Design and performance standards; Certification and testing.	9/28/1981	7/8/1982, 47 FR 29668	Submitted on April 23, 1980. See 40 CFR 52.220(c)(69)(iv).
41959	Simultaneous testing	9/20/1976	7/8/1982, 47 FR 29668	Submitted on April 23, 1980. See 40 CFR 52.220(c)(69)(iv).
41960	Local or regional authorities.	9/20/1976	7/8/1982, 47 FR 29668	Submitted on April 23, 1980. See 40 CFR 52.220(c)(69)(iv).
41960.1	Operation of motor vehicle fueling vapor control system.	9/20/1976	7/8/1982, 47 FR 29668	Submitted on April 23, 1980. See 40 CFR 52.220(c)(69)(iv).
41960.2	Maintenance of vapor control system; Identification of equipment defects.	9/28/1981	7/8/1982, 47 FR 29668	Submitted on April 23, 1980. See 40 CFR 52.220(c)(69)(iv).
41960.3	Complaints concerning motor vehicle vapor control systems.	9/28/1981	7/8/1982, 47 FR 29668	Submitted on April 23, 1980. See 40 CFR 52.220(c)(69)(iv).
41960.4	Posting of operating instructions for motor vehicle fueling vapor control systems.	9/28/1981	7/8/1982, 47 FR 29668	Submitted on April 23, 1980. See 40 CFR 52.220(c)(69)(iv).
41961	Certification fee	9/20/1976	7/8/1982, 47 FR 29668	Submitted on April 23, 1980. See 40 CFR 52.220(c)(69)(iv).
41962	Certification of standards compliance for cargo tanks.	1/1/1978	7/8/1982, 47 FR 29668	Submitted on April 23, 1980. See 40 CFR 52.220(c)(69)(iv). Added Stats. 1977 ch. 983 § 2.

TABLE 1—EPA-APPROVED STATUTES AND STATE REGULATIONS [1]—Continued

State citation	Title/subject	State effective date	EPA approval date	Additional explanation
PUBLIC RESOURCES CODE				
Division 13 (Environmental Quality)				
21000	Legislative intent	1/1/1980	1/21/1981, 46 FR 5965	Section from the California Environmental Quality Act. Submitted on October 20, 1980. See 40 CFR 52.220(c)(63). Stats. 1979 c. 947 p. 3270 §4.
21001	Additional legislative intent.	1/1/1980	1/21/1981, 46 FR 5965	Section from the California Environmental Quality Act. Submitted on October 20, 1980. See 40 CFR 52.220(c)(63). Stats. 1979 c. 947 p. 3271 §5.
21002	Approval of projects; feasible alternatives or mitigation measures.	1/1/1977	1/21/1981, 46 FR 5965	Section from the California Environmental Quality Act. Submitted on October 20, 1980. See 40 CFR 52.220(c)(63). Stats. 1976 c. 1312 §1.
21002.1	Use of environmental impact reports; policy.	1/1/1978	1/21/1981, 46 FR 5965	Section from the California Environmental Quality Act. Submitted on October 20, 1980. See 40 CFR 52.220(c)(63). Stats. 1977 c. 1200 p. 3996 §1.5.
21061	''Environmental impact report'' defined.	1/1/1977	1/21/1981, 46 FR 5965	Section from the California Environmental Quality Act. Submitted on October 20, 1980. See 40 CFR 52.220(c)(63). Stats. 1976 c. 1312 §5.
21063	''Public agency'' defined.	12/5/1972	1/21/1981, 46 FR 5965	Section from the California Environmental Quality Act. Submitted on October 20, 1980. See 40 CFR 52.220(c)(63). Stats. 1972 c. 1154 p. 2271 §1.
21065	''Project'' defined	12/5/1972	1/21/1981, 46 FR 5965	Section from the California Environmental Quality Act. Submitted on October 20, 1980. See 40 CFR 52.220(c)(63). Stats. 1972 c. 1154 p. 2271 §1.
21080.1	Environmental impact report or negative declaration; determination by lead agency; finality; consultation.	1/1/1978	1/21/1981, 46 FR 5965	Section from the California Environmental Quality Act. Submitted on October 20, 1980. See 40 CFR 52.220(c)(63). Stats. 1977 c. 1200 p. 3997 §3.
21080.4	Environmental impact report; requirement determined by lead agency; duties of responsible agencies; consultation; assistance by office of planning and research.	9/26/1978	1/21/1981, 46 FR 5965	Section from the California Environmental Quality Act. Submitted on October 20, 1980. See 40 CFR 52.220(c)(63). Stats. 1978 c. 1113 p. 3403 §8.3.
21080.5(a), (b), (c), and (d).	Plans in lieu of environmental impact report.	6/30/1978	1/21/1981, 46 FR 5965	Section from the California Environmental Quality Act. Submitted on October 20, 1980. See 40 CFR 52.220(c)(63). Stats. 1978 c. 308.
21081	Necessary findings where environmental impact report identifies effects.	1/1/1977	1/21/1981, 46 FR 5965	Section from the California Environmental Quality Act. Submitted on October 20, 1980. See 40 CFR 52.220(c)(63). Stats. 1976 c. 1312 §9.

TABLE 1—EPA-APPROVED STATUTES AND STATE REGULATIONS [1]—Continued

State citation	Title/subject	State effective date	EPA approval date	Additional explanation
21082	Public agencies; adoption of objectives, criteria and procedures; consistency with guidelines.	1/1/1977	1/21/1981, 46 FR 5965	Section from the California Environmental Quality Act. Submitted on October 20, 1980. See 40 CFR 52.220(c)(63). Stats. 1976 c. 1312 § 9.5.
21100	Environmental impact report on proposed state projects; significant effect; cumulative impact analysis.	1/1/1977	1/21/1981, 46 FR 5965	Section from the California Environmental Quality Act. Submitted on October 20, 1980. See 40 CFR 52.220(c)(63). Stats. 1976 c. 1312 § 16.
21104	State lead agency; consultations prior to completion of impact report.	1/1/1978	1/21/1981, 46 FR 5965	Section from the California Environmental Quality Act. Submitted on October 20, 1980. See 40 CFR 52.220(c)(63). Stats. 1977 c. 1200 p. 4001 § 11.
21151	Local agencies; preparation and completion of impact report; submission as part of general plan report; significant effort.	12/5/1972	1/21/1981, 46 FR 5965	Section from the California Environmental Quality Act. Submitted on October 20, 1980. See 40 CFR 52.220(c)(63). Stats. 1972 c. 1154 p. 2276 § 11.
21153	Local lead agency; consultations prior to completion of impact report.	12/5/1972	1/21/1981, 46 FR 5965	Section from the California Environmental Quality Act. Submitted on October 20, 1980. See 40 CFR 52.220(c)(63). Stats. 1972 c. 1154 p. 2276 § 14.
21160	Application for lease, permit, license, etc.; data and information; purpose; trade secrets.	12/5/1972	1/21/1981, 46 FR 5965	Section from the California Environmental Quality Act. Submitted on October 20, 1980. See 40 CFR 52.220(c)(63). Stats. 1972 c. 1154 p. 2276 § 15.
CALIFORNIA CODE OF REGULATIONS				
Title 2 (Administration), Division 6 (Fair Political Practices Commission), Chapter 7 (Conflicts of Interest); Article 1 (Conflicts of Interest; General Prohibition)				
18700	Basic rule; Guide to conflict of interest regulations.	1/19/2006	4/1/2016, 81 FR 18766	Filed on December 17, 1976, effective upon filing, and last amendment filed on December 20, 2005, operative January 19, 2006. Submitted on March 6, 2014. See 40 CFR 52.220(c)(468)(i)(A)(*4*).
18701	Public Official, Definitions.	1/28/2006	4/1/2016, 81 FR 18766	Filed on January 22, 1976, effective February 21, 1976, and last amendment filed on December 29, 2005, operative January 28, 2006. Submitted on March 6, 2014. See 40 CFR 52.220(c)(468)(i)(A)(*5*).
Title 3 (Food and Agriculture), Division 6 (Pesticides and Pest Control Operations), Chapter 2 (Pesticides); Subchapter 4 (Restricted Materials); Article 4 (Field Fumigant Use Requirements)				
6447	Methyl Bromide—Field Fumigation General Requirements.	1/25/2008	10/26/2012, 77 FR 65294	Only the undesignated introductory text of this regulation was approved into the SIP. Submitted on October 12, 2009. See 40 CFR 52.220(c)(413)(i)(A)(1).
6447.3	Methyl Bromide—Field Fumigation Methods.	1/25/2008	10/26/2012, 77 FR 65294	Submitted on October 12, 2009. See 40 CFR 52.220(c)(413)(i)(A)(1).

TABLE 1—EPA-APPROVED STATUTES AND STATE REGULATIONS [1]—Continued

State citation	Title/subject	State effective date	EPA approval date	Additional explanation
6448	1,3-Dichloropropene Field Fumigation—General Requirements.	1/25/2008	10/26/2012, 77 FR 65294	Submitted on October 12, 2009. See 40 CFR 52.220(c)(413)(i)(A)(1).
6448.1	1,3-Dichloropropene Field Fumigation Methods.	4/7/2011	10/26/2012, 77 FR 65294	Submitted on August 2, 2011. See 40 CFR 52.220(c)(414)(i)(A)(1).
6449	Chloropicrin Field Fumigation—General Requirements.	1/25/2008	10/26/2012, 77 FR 65294	Submitted on October 12, 2009. See 40 CFR 52.220(c)(413)(i)(A)(1).
6449.1	Chloropicrin Field Fumigation Methods.	4/7/2011	10/26/2012, 77 FR 65294	Submitted on August 2, 2011. See 40 CFR 52.220(c)(414)(i)(A)(1).
6450	Metam-Sodium, Potassium N-methyldithiocarbamate (metam potassium), and Dazomet Field Fumigation—General Requirements.	1/25/2008	10/26/2012, 77 FR 65294	Submitted on October 12, 2009. See 40 CFR 52.220(c)(413)(i)(A)(1).
6450.1	Metam-Sodium and Potassium N-methyldithiocarbamate (Metam Potassium) Field Fumigation Methods.	4/7/2011	10/26/2012, 77 FR 65294	Submitted on August 2, 2011. See 40 CFR 52.220(c)(414)(i)(A)(1).
6450.2	Dazomet Field Fumigation Methods.	1/25/2008	10/26/2012, 77 FR 65294	Submitted on 10/12/2009. See 40 CFR 52.220(c)(413)(i)(A)(1).
6451	Sodium Tetrathiocarbonate Field Fumigation—General Requirements.	1/25/2008	10/26/2012, 77 FR 65294	Submitted on October 12, 2009. See 40 CFR 52.220(c)(413)(i)(A)(1).
6451.1	Sodium Tetrathiocarbonate Field Fumigation Methods.	1/25/2008	10/26/2012, 77 FR 65294	Submitted on October 12, 2009. See 40 CFR 52.220(c)(413)(i)(A)(1).
6452	Reduced Volatile Organic Compound Emissions Field Fumigation Methods.	11/1/2013	81 FR 6481, 2/8/2016	Amends previous version of rule approved at 77 FR 65294 (October 26, 2012). Amended rule adopted by the California Department of Pesticide Regulation on May 23, 2013. Submitted on February 4, 2015.
6452.1	Fumigant Volatile Organic Compound Emission Records and Reporting.	1/25/2008	10/26/2012, 77 FR 65294	Submitted on October 12, 2009. See 40 CFR 52.220(c)(413)(i)(A)(1).
6452.2	Volatile Organic Compound Emission Limits.	11/1/2013	81 FR 6481, 2/8/2016	Amends previous version of rule approved at 77 FR 65294 (October 26, 2012). Amended rule adopted by the California Department of Pesticide Regulation on May 23, 2013. Submitted on February 4, 2015.
6452.3	Field Fumigant Volatile Organic Compound Emission Allowances.	4/7/2011	10/26/2012, 77 FR 65294	Submitted on August 2, 2011. See 40 CFR 52.220(c)(414)(i)(A)(1).

TABLE 1—EPA-APPROVED STATUTES AND STATE REGULATIONS [1]—Continued

State citation	Title/subject	State effective date	EPA approval date	Additional explanation
Title 3 (Food and Agriculture), Division 6 (Pesticides and Pest Control Operations), Chapter 3 (Pest Control Operations), Subchapter 1 (Licensing), Article 5 (Agricultural Pest Control Adviser Licenses)				
6558	Recommendations for Use of Non-fumigants in the San Joaquin Valley Ozone Nonattainment Area.	11/1/2013	81 FR 6481, 2/8/2016	Adopted by the California Department of Pesticide Regulation on May 23, 2013. Submitted on February 4, 2015.
Title 3 (Food and Agriculture), Division 6 (Pesticides and Pest Control Operations), Chapter 3 (Pest Control Operations), Subchapter 1 (Licensing), Article 6 (Pest Control Dealer Licenses)				
6577	Sales of Non-fumigants for Use in the San Joaquin Valley Ozone Non-attainment Area.	11/1/2013	81 FR 6481, 2/8/2016	Adopted by the California Department of Pesticide Regulation on May 23, 2013. Submitted on February 4, 2015.
Title 3 (Food and Agriculture), Division 6 (Pesticides and Pest Control Operations), Chapter 3 (Pest Control Operations); Subchapter 2 (Work Requirements); Article 1 (Pest Control Operations Generally)				
6624	Pesticide Use Records.	12/20/2010	10/26/2012, 77 FR 65294	Excluding references in subsection (f) to methyl iodide and section 6446.1. Submitted on August 2, 2011. See 40 CFR 52.220(c)(414)(i)(A)(2).
6626	Pesticide Use Reports for Production Agriculture.	4/7/2011	10/26/2012, 77 FR 65294	Submitted on August 2, 2011. See 40 CFR 52.220(c)(414)(i)(A)(2).
Title 3 (Food and Agriculture), Division 6 (Pesticides and Pest Control Operations), Chapter 4 (Environmental Protection), Subchapter 2 (Air), Article 1 (Toxic Air Contaminants)				
6864	Criteria for Identifying Pesticides as Toxic Air Contaminants.	11/1/2013	81 FR 6481, 2/8/2016	Adopted by the California Department of Pesticide Regulation on May 23, 2013. Submitted on February 4, 2015.
Title 3 (Food and Agriculture), Division 6 (Pesticides and Pest Control Operations), Chapter 4 (Environmental Protection), Subchapter 2 (Air), Article 2 (Volatile Organic Compounds)				
6880	Criteria to Designate Low-Volatile Organic Compound (VOC) or High-VOC Nonfumigant Pesticide Products.	11/1/2013	9/20/2016, 81 FR 64350	Adopted by the California Department of Pesticide Regulation on May 23, 2013. Submitted on February 4, 2015.
6881	Annual Volatile Organic Compound Emissions Inventory Report.	11/1/2013	9/20/2016, 81 FR 64350	Amends and renumbers previous version of rule approved at 77 FR 65294 (October 26, 2012) as 3 CCR § 6452.4. Amended and renumbered rule adopted by the California Department of Pesticide Regulation on May 23, 2013. Submitted on February 4, 2015.
6883	Recommendation Requirements in the San Joaquin Valley Ozone Nonattainment Area.	11/1/2013	9/20/2016, 81 FR 64350	Adopted by the California Department of Pesticide Regulation on May 23, 2013. Submitted on February 4, 2015.
6884	San Joaquin Valley Ozone Nonattainment Area Use Prohibitions.	11/1/2013	9/20/2016, 81 FR 64350	Adopted by the California Department of Pesticide Regulation on May 23, 2013. Submitted on February 4, 2015.

TABLE 1—EPA-APPROVED STATUTES AND STATE REGULATIONS [1]—Continued

State citation	Title/subject	State effective date	EPA approval date	Additional explanation
6886	Dealer Responsibilities for the San Joaquin Valley Ozone Nonattainment Area.	11/1/2013	9/20/2016, 81 FR 64350	Adopted by the California Department of Pesticide Regulation on May 23, 2013. Submitted on February 4, 2015.
Title 13 (Motor Vehicles), Division 3 (Air Resources Board), Chapter 1 (Motor Vehicle Pollution Control Devices), Article 1 (General Provisions)				
1900(b)(11) through (b)(17).	Definitions	11/22/1999	81 FR 39424, 6/16/2016	Definitions of ''motorcycle engine,'' ''passenger car,'' ''recall,'' ''replacement part,'' ''subgroup,'' and ''reactivity adjustment factor.''
1900(b)(9) and (b)(22)	Definitions	8/7/2012	81 FR 39424, 6/16/2016	Definitions of ''intermediate volume manufacturer'' and ''small volume manufacturer.''
1900(b)(22)	Definitions	12/31/2012	81 FR 39424, 6/16/2016	Definition of ''small volume manufacturer.''
Title 13 (Motor Vehicles), Division 3 (Air Resources Board), Chapter 1 (Motor Vehicle Pollution Control Devices); Article 2 (Approval of Motor Vehicle Pollution Control Devices (New Vehicles))				
1956.8(a)(2), (a)(5), (b), and (h).	Exhaust Emissions Standards and Test Procedures—1985 and Subsequent Model Heavy-Duty Engines and Vehicles.	11/17/2002	81 FR 39424, 6/16/2016	Exhaust emissions standards for new 2004 and subsequent model heavy-duty diesel engines, heavy-duty natural gas-fueled and LPG-fueled engines derived from diesel-cycle engines; crankcase emissions requirements; test procedures.
1956.8(b), (c)(1)(B), (d), and (h)(2) (footnotes J and K).	Exhaust Emissions Standards and Test Procedures—1985 and Subsequent Model Heavy-Duty Engines and Vehicles.	12/4/2003	81 FR 39424, 6/16/2016	Test procedures; exhaust emissions standards for new 2005 and subsequent model HD OC engines.
1956.8(a)(2)(A), (a)(6), and (b).	Exhaust Emissions Standards and Test Procedures—1985 and Subsequent Model Heavy-Duty Engines and Vehicles.	11/15/2006	81 FR 39424, 6/16/2016	Heavy-duty diesel engine idling requirements; test procedures.
1956.8	Exhaust Emissions Standards and Test Procedures—1985 and Subsequent Model Heavy-Duty Engines and Vehicles.	12/31/2008	5/12/2010, 75 FR 26653	Submitted on February 3, 2009. See 40 CFR 52.220(c)(376)(i)(A)(1).
1956.8(b), (c)(1)(B), (c)(3), (d), (h)(2), and (h)(5).	Exhaust Emissions Standards and Test Procedures—1985 and Subsequent Model Heavy-Duty Engines and Vehicles.	8/7/2012	81 FR 39424, 6/16/2016	Test procedures; exhaust emissions standard for new 2005 and subsequent model HD OC engines; 1992 and subsequent model diesel engines used in MD low-emissions vehicles.
1956.8(b), (c)(1)(A)(3), (d), and (h)(5).	Exhaust Emissions Standards and Test Procedures—1985 and Subsequent Model Heavy-Duty Engines and Vehicles.	12/31/2012	81 FR 39424, 6/16/2016	Test procedures; exhaust emissions standard for new 2005 and subsequent model HD OC engines; 1992 and subsequent model diesel engines used in MD low-emissions vehicles.

TABLE 1—EPA-APPROVED STATUTES AND STATE REGULATIONS [1]—Continued

State citation	Title/subject	State effective date	EPA approval date	Additional explanation
1956.8(b)	Exhaust Emissions Standards and Test Procedures—1985 and Subsequent Model Heavy-Duty Engines and Vehicles.	12/22/2011	83 FR 23232, 5/18/2018	Updates certain test procedures.
1958(a) (excluding (a)(1)), (b)(1), (b)(2), (f), (g), and (h).	Exhaust Emissions Standards and Test Procedures—Motorcycles and Motorcycle Engines Manufactured on or after January 1, 1978.	11/22/1999	81 FR 39424, 6/16/2016	Exhaust emissions standards for HC + NO_X and for CO; different standards established for different sizes and for different models years; provisions for small volume manufacturers and for early-compliance credits; sunset review. Excluded subsection relates to an exclusion for motorcycles or motorcycle engines where the engine displacement is less than 50 cubic centimeters.
1960.1	Exhaust Emissions Standards and Test Procedures—1981 through 2006 Model Passenger Cars, Light-Duty and Medium-Duty Vehicles.	3/26/2004	5/12/2010, 75 FR 26653	Submitted on February 3, 2009. See 40 CFR 52.220(c)(376)(i)(A)(1).
1960.1(r)	Exhaust Emission Standards and Test Procedures—1981 through 2006 Model Passenger Cars, Light Duty Trucks, and Medium Duty Vehicles.	8/7/2012	81 FR 39424, 6/16/2016	4,000-mile Supplement FTP Emission Standards for LEV, ULEV, and SULEV in the PC, LDT, and MDVs.
1960.1(r)	Exhaust Emission Standards and Test Procedures—1981 through 2006 Model Passenger Cars, Light Duty Trucks, and Medium Duty Vehicles.	12/31/2012	81 FR 39424, 6/16/2016	4,000-mile Supplement FTP Emission Standards for LEV, ULEV, and SULEV in the PC, LDT, and MDVs.
1961, including Introduction, (a)(4), (a)(8), (a)(12), (a)(15); (b)(3)(B), (b)(3)(C), (b)(3)(D), (b)(3)(E); (d); and (e).	Exhaust Emission Standards and Test Procedures—2004 and Subsequent Model Passenger Cars, Light-Duty Trucks, and Medium-Duty Vehicles.	12/4/2003	81 FR 39424, 6/16/2016	50 °F Exhaust emissions standards, requirements for vehicles certified to the optional 150,000 mile standards, NMOG credit provisions, fuel-fired heater provisions, phase-in requirements for MDV manufacturers; test procedures.
1961(d)	Exhaust Emission Standards and Test Procedures—2004 and Subsequent Model Passenger Cars, Light-Duty Trucks, and Medium-Duty Vehicles.	2/17/2007	81 FR 39424, 6/16/2016	Test procedures.
1961	Exhaust Emissions Standards and Test Procedures—2004 and Subsequent Model Passenger Cars, Light-Duty and Medium-Duty Vehicles.	6/16/2008	5/12/2010, 75 FR 26653	Submitted on February 3, 2009. See 40 CFR 52.220(c)(376)(i)(A)(1).

TABLE 1—EPA-APPROVED STATUTES AND STATE REGULATIONS [1]—Continued

State citation	Title/subject	State effective date	EPA approval date	Additional explanation
1961, including Introduction, (a)(1), (a)(3), (a)(4), (a)(5), (a)(7), (a)(8)(B), (a)(14)(A); (b)(1)(A), (b)(1)(B)(1.)(c.), (b)(1)(B)(3.), (b)(1)(C)(1.), (b)(1)(D), (b)(3)(A), (b)(3)(B), (b)(3)(C), (b)(3)(E); (c)(1), (c)(2)(A), (c)(3)(A), (d).	Exhaust Emission Standards and Test Procedures—2004 through 2019 Model Passenger Cars, Light-Duty Trucks, and Medium-Duty Vehicles.	8/7/2012	81 FR 39424, 6/16/2016	"LEV III" exhaust emission standards for 2004 through 2019 model PC, LDT, and MDV; test procedures.
1961, including Introduction, (a)(1), (b)(1)(A), (d).	Exhaust Emission Standards and Test Procedures—2004 through 2019 Model Passenger Cars, Light-Duty Trucks, and Medium-Duty Vehicles.	12/31/2012	81 FR 39424, 6/16/2016	"LEV III" exhaust emission standards for 2004 through 2019 model PC, LDT, and MDV; test procedures.
1961.2	Exhaust Emission Standards and Test Procedures—2015 and Subsequent Model Passenger Cars, Light-Duty Trucks, and Medium-Duty Vehicles.	8/7/2012	81 FR 39424, 6/16/2016	"LEV III" exhaust emission standards for 2015 and subsequent model year PC, LDT, and MDV.
1961.2, including Introduction, (a)(1), (a)(2)(A), (a)(2)(D), (a)(7)(A), (a)(7)(A)(2.) (through equation 2), (A)(9), (b)(1)(A), (b)(1)(A)(2.), (b)(1)(D), (b)(4)(A), (c)(1)(B), (c)(3)(B), and (d).	Exhaust Emission Standards and Test Procedures—2015 and Subsequent Model Passenger Cars, Light-Duty Trucks, and Medium-Duty Vehicles.	12/31/2012	81 FR 39424, 6/16/2016	"LEV III" exhaust emission standards for 2015 and subsequent model year PC, LDT, and MDV.
1962.1	Zero-Emission Vehicle Standards for 2009 through 2017 Model Year Passenger Cars, Light-Duty Trucks, and Medium-Duty Vehicles.	8/7/2012	81 FR 39424, 6/16/2016	ZEV standards, percentage ZEV requirements, PZEV provisions, qualification for ZEV multipliers and credits, generation and use of credits, calculation of penalties, test procedures.
1962.1(b)(2)(D)(1) and (2), (c)(3)(A), and (h)(1).	Zero-Emission Vehicle Standards for 2009 through 2017 Model Year Passenger Cars, Light-Duty Trucks, and Medium-Duty Vehicles.	12/31/2012	81 FR 39424, 6/16/2016	ZEV requirements for large volume manufacturers in model years 2012 through 2017 and PZEV allowances; test procedures, ZEV-specific definitions.
1962.2, excluding (g)(6)(C).	Zero-Emission Vehicle Standards for 2018 and Subsequent Model Year Passenger Cars, Light-Duty Trucks, and Medium-Duty Vehicles.	8/7/2012	81 FR 39424, 6/16/2016	ZEV standards, percentage ZEV requirements, TZEV provisions, qualification of ZEV credits, generation and use of credits, test procedures, ZEV-specific definitions; excluded provision relates to GHG–ZEV over compliance credits.
1962.2(c)(2)(B), (c)(3)(A), (c)(3)(A)(1.), (h)(1).	Zero-Emission Vehicle Standards for 2018 and Subsequent Model Year Passenger Cars, Light-Duty Trucks, and Medium-Duty Vehicles.	12/31/2012	81 FR 39424, 6/16/2016	Certain ZEV requirements in model years 2018 and subsequent model years including evaporative emission standards for TZEVs, TZEV allowances, and test procedures.

TABLE 1—EPA-APPROVED STATUTES AND STATE REGULATIONS [1]—Continued

State citation	Title/subject	State effective date	EPA approval date	Additional explanation
1962.3	Electric Vehicle Charging Requirements.	8/7/2012	81 FR 39424, 6/16/2016	Applicability, definitions, requirements, alternatives.
1965	Emission Control and Smog Index Labels—1979 and Subsequent Model-Year Motor Vehicles.	11/22/1999	81 FR 39424, 6/16/2016	Emission control label requirements.
1965	Emission Control and Smog Index Labels—1979 and Subsequent Model-Year Motor Vehicles.	12/4/2003	81 FR 39424, 6/16/2016	Emission control label requirements.
1965	Emission Control, Smog Index, and Environmental Performance Labels—1979 and Subsequent Model-Year Motor Vehicles.	8/7/2012	81 FR 39424, 6/16/2016	Emission control label requirements.
1968.2(a), (c) (excluding ''emission standard,'' ''evaporative emission standards,'' and ''exhaust emission standards'' or ''tailpipe emission standards''), (d)(3), (d)(4), (e)(6), (e)(15), (f)(1)–(f)(9, (f)(12), (f)(13), (f)(15), (f)(17), (h)(4), (i)(1), (i)(2), and (j)(2).	Malfunction and Diagnostic System Requirements—2004 and Subsequent Model-Year Passenger Cars, Light-Duty Trucks, and Medium-Duty Vehicles and Engines.	7/31/2013	82 FR 14446, 3/21/2017	Provisions relate to On-Board Diagnostic systems requirements (OBD II).
1968.5(a)(3) (excluding ''nonconforming OBD II system''), (b)(3), (b)(6), and (c)(3).	Enforcement of Malfunction and Diagnostic System Requirements for 2004 and Subsequent Model-Year Passenger Cars, Light-Duty Trucks, and Medium-Duty Vehicles and Engines.	7/31/2013	82 FR 14446, 3/21/2017	Provisions related to enforcement of OBD II requirements.
1971.1, excluding the following definitions: ''emission standard,'' ''evaporative emission standards,'' and ''exhaust emission standards'' or ''tailpipe emission standards'').	On-Board Diagnostic System Requirements—2010 and Subsequent Model-Year Heavy-Duty Engines.	7/31/2013	82 FR 14446, 3/21/2017	Amends emission standards and other requirements for On-Board Diagnostic OBD (OBD) systems for heavy-duty vehicles.
1971.5	Enforcement of Malfunction and Diagnostic System Requirements for 2010 and Subsequent Model-Year Heavy-Duty Engines.	6/17/2010	81 FR 39424, 6/16/2016	Establishes enforcement protocol for use by CARB to assure the engines certified for sale in California are equipped with OBD systems that properly function and meet the applicable regulatory requirements.
1971.5(a)(3) (excluding amendments to the existing definition for ''nonconforming OBD system''), (b)(3), (b)(6) and (d)(3).	Enforcement of Malfunction and Diagnostic System Requirements for 2010 and Subsequent Model-Year Heavy-Duty Engines.	7/31/2013	82 FR 14446, 3/21/2017	Amends certain enforcement-related provisions for the OBD systems requirements for heavy-duty vehicles.

TABLE 1—EPA-APPROVED STATUTES AND STATE REGULATIONS [1]—Continued

State citation	Title/subject	State effective date	EPA approval date	Additional explanation
1976(c)	Standards and Test Procedures for Motor Vehicle Fuel Evaporative Emissions.	2/17/2007	81 FR 39424, 6/16/2016	Test procedures.
1976(b)(1), (c), (f)(3) and (f)(4).	Standards and Test Procedures for Motor Vehicle Fuel Evaporative Emissions.	8/7/2012	81 FR 39424, 6/16/2016	Fuel evaporative emission standards; test procedures; definitions.
1976(b)(1), (b)(1)(G)(3), (c).	Standards and Test Procedures for Motor Vehicle Fuel Evaporative Emissions.	12/31/2012	81 FR 39424, 6/16/2016	Fuel evaporative emission standards; test procedures; definitions.
1978(a)(1), (b)	Standards and Test Procedures for Vehicle Refueling Emissions.	12/4/2003	81 FR 39424, 6/16/2016	Standards for vehicle refueling for 1998 and subsequent model passenger cars, LDT, and MDV less than 8,501 pounds.
1978(b)	Standards and Test Procedures for Vehicle Refueling Emissions.	2/17/2007	81 FR 39424, 6/16/2016	Test procedures.
1978	Standards and Test Procedures for Vehicle Refueling Emissions.	8/7/2012	81 FR 39424, 6/16/2016	Refueling emissions standards for 1998 and subsequent model gasoline-fueled, alcohol-fueled, diesel-fueled, LPG-fueled, fuel-flexible and hybrid electric PC, LDT, and MDV up to 8,501 pounds, and similarly-fueled 2015 and subsequent year MDV from 8,501 pounds to 14,000 pounds.
Title 13 (Motor Vehicles), Division 3 (Air Resources Board), Chapter 1 (Motor Vehicle Pollution Control Devices); Article 4.5				
2025	Regulation to Reduce Emissions of Diesel Particulate Matter, Oxides of Nitrogen and Other Criteria Pollutants, from in-Use Heavy-Duty Diesel-Fueled Vehicles.	12/14/2011	4/4/2012, 77 FR 20308	The State of California Office of Administrative Law's corresponding Notice of Approval of Regulatory Action is dated December 14, 2011. Submitted on December 15, 2011. See 40 CFR 52.220(c)(410)(i)(A)(2).
2027	In-Use on-Road Diesel-Fueled Heavy-Duty Drayage Trucks.	11/9/2011	4/4/2012, 77 FR 20308	The State of California Office of Administrative Law's corresponding Notice of Approval of Regulatory Action is dated November 9, 2011. Submitted on December 9, 2011. See 40 CFR 52.220(c)(409)(i)(A)(2).
Title 13 (Motor Vehicles), Division 3 (Air Resources Board), Chapter 1 (Motor Vehicle Pollution Control Devices), Article 6 (Emission Control Warranty System)				
2037(g)	Defects Warranty Requirements for 1990 and Subsequent Model Passenger Cars, Light-Duty Trucks, Medium-Duty Vehicles, and Motor Vehicle Engines Used in Such Vehicles.	8/7/2012	81 FR 39424, 6/16/2016	Reporting requirements.

TABLE 1—EPA-APPROVED STATUTES AND STATE REGULATIONS [1]—Continued

State citation	Title/subject	State effective date	EPA approval date	Additional explanation
2038(c)(3)	Performance Warranty Requirements for 1990 and Subsequent Model Passenger Cars, Light-Duty Trucks, and Medium-Duty Vehicles, and Motor Vehicle Engines Used in Such Vehicles.	8/7/2012	81 FR 39424, 6/16/2016	Reporting requirements.
Title 13 (Motor Vehicles), Division 3 (Air Resources Board), Chapter 2 (Enforcement of Vehicle Emission Standards and Surveillance Testing), Article 1 (Assembly-Line Testing)				
2062	Assembly-Line Procedures—1998 and Subsequent Model Years.	8/7/2012	81 FR 39424, 6/16/2016	Assembly-line test procedures.
Title 13 (Motor Vehicles), Division 3 (Air Resources Board), Chapter 2 (Enforcement of Vehicle Emission Standards and Surveillance Testing), Article 2.1 (Procedures for In-Use Vehicle Voluntary and Influenced Recalls)				
2111(a)(1)	Applicability	8/15/2007	81 FR 39424, 6/16/2016	Procedures apply to California-certified 1982 and subsequent model-year passenger cars, light-duty trucks, medium-duty vehicles, heavy-duty vehicles, motorcycles, and 1997 and subsequent model-year off-road motorcycles and all-terrain vehicles, and 2007 and subsequent model-year off-road sport vehicles, off-road utility vehicles, and sand cars.
2111(a)(4)	Applicability	8/16/2009	81 FR 39424, 6/16/2016	Procedures apply to certain California-certified 2008 model year spark-ignition sterndrive/inboard marine engines with maximum rated power less than or equal to 373 kilowatts, and all California-certified 2009 and subsequent model-year spark-ignition sterndrive/inboard marine engines.
2112(l)(12)	Definitions	8/15/2007	81 FR 39424, 6/16/2016	Definition of ''useful life'' for 1997 and subsequent model year off-road motorcycles, all-terrain vehicles, and for 2007 and subsequent model year off-road sport vehicles, off-road utility vehicles, sand cars, and engines used in such vehicles.
2112(l)(20), (l)(23)	Definitions	8/16/2009	81 FR 39424, 6/16/2016	Definition of ''useful life'' for certain types of vehicles.
2112(b), (l)(9), (l)(18)	Definitions	8/7/2012	81 FR 39424, 6/16/2016	Definition of ''correlation factor,'' and definition of ''useful life'' for certain types of vehicles.
Title 13 (Motor Vehicles), Division 3 (Air Resources Board), Chapter 2 (Enforcement of Vehicle Emission Standards and Surveillance Testing), Article 2.3 (In-Use Vehicle Enforcement Test Procedures)				
2139(h)	Testing	8/16/2009	81 FR 39424, 6/16/2016	Specifies in-use compliance tests for spark-ignition sterndrive/inboard marine engines.
2139(a), (b), (c)(2)	Testing	8/7/2012	81 FR 39424, 6/16/2016	Specifies in-use vehicle emission tests by CARB after vehicles have been accepted and restorative maintenance, if any, has been performed.

TABLE 1—EPA-APPROVED STATUTES AND STATE REGULATIONS [1]—Continued

State citation	Title/subject	State effective date	EPA approval date	Additional explanation
2140(b)	Notification and Use of Test Results.	8/7/2012	81 FR 39424, 6/16/2016	Notification and use requirements once the in-use emission tests have been completed.
Title 13 (Motor Vehicles), Division 3 (Air Resources Board), Chapter 2 (Enforcement of Vehicle Emission Standards and Surveillance Testing), Article 2.4 (Procedures for Reporting Failures of Emission-Related Components)				
2145(b)(3)	Field Information Report.	8/7/2012	81 FR 39424, 6/16/2016	Reporting requirements.
2147(b)	Demonstration of Compliance with Emissions Standards.	8/16/2009	81 FR 39424, 6/16/2016	Applies the requirements to sterndrive/inboard marine engines.
2147(b)(3)	Demonstration of Compliance with Emissions Standards.	8/7/2012	81 FR 39424, 6/16/2016	Testing requirements and selection of deterioration factors.
Title 13 (Motor Vehicles), Division 3 (Air Resources Board), Chapter 4.4 (Specifications for Fill Pipes and Openings of Motor Vehicle Fuel Tanks)				
2235	Requirements	8/7/2012	81 FR 39424, 6/16/2016	Requirements for 1977 and subsequent model gasoline-fueled motor vehicles with respect to fill pipes and openings.
Title 13 (Motor Vehicles), Division 3 (Air Resources Board), Chapter 5 (Standards for Motor Vehicle Fuels); Article 1 (Standards for Gasoline)				
2250	Degree of Unsaturation for Gasolines Sold Before April 1, 1996.	12/16/1992	8/21/1995, 60 FR 43379	Submitted on November 15, 1994. See 40 CFR 52.220(c)(204)(i)(A)(3).
2252	Sulfur Content of Gasoline Represented as Unleaded Sold Before April 1, 1996.	8/11/1991	8/21/1995, 60 FR 43379	Submitted on November 15, 1994. See 40 CFR 52.220(c)(204)(i)(A)(3).
2253.4	Lead in Gasoline	8/12/1991	5/12/2010, 75 FR 26653	Submitted on June 15, 2004. See 40 CFR 52.220(c)(374)(i)(A)(1).
2254	Manganese Additive Content.	8/12/1991	5/12/2010, 75 FR 26653	Submitted on June 15, 2004. See 40 CFR 52.220(c)(374)(i)(A)(1).
2257	Required Additives in Gasoline.	7/16/1999	5/12/2010, 75 FR 26653	Submitted on June 15, 2004. See 40 CFR 52.220(c)(374)(i)(A)(1).
2259	Exemptions for Motor Vehicle Fuels Used in Test Programs.	2/15/1995	5/12/2010, 75 FR 26653	Submitted on June 15, 2004. See 40 CFR 52.220(c)(374)(i)(A)(1).
2260	Definitions	8/29/2008	5/12/2010, 75 FR 26653	Submitted on February 3, 2009. See 40 CFR 52.220(c)(375)(i)(A)(1).
2261	Applicability of Standards; Additional Standards.	8/29/2008	5/12/2010, 75 FR 26653	Submitted on February 3, 2009. See 40 CFR 52.220(c)(375)(i)(A)(1).
2262	The California Reformulated Gasoline Phase 2 and Phase 3 Standards.	8/29/2008	5/12/2010, 75 FR 26653	Submitted on February 3, 2009. See 40 CFR 52.220(c)(375)(i)(A)(1).
2262.3	Compliance with the CaRFP Phase 2 and CaRFG Phase 2 Standards for Sulfur, Benzene, Aromatic Hydrocarbons, Olefins, T50 and T90.	8/29/2008	5/12/2010, 75 FR 26653	Submitted on February 3, 2009. See 40 CFR 52.220(c)(375)(i)(A)(1).

TABLE 1—EPA-APPROVED STATUTES AND STATE REGULATIONS [1]—Continued

State citation	Title/subject	State effective date	EPA approval date	Additional explanation
2262.4	Compliance with the CaRFP Phase 2 and CaRFG Phase 2 Standards for Reid Vapor Pressure.	8/29/2008	5/12/2010, 75 FR 26653	Submitted on February 3, 2009. See 40 CFR 52.220(c)(375)(i)(A)(1).
2262.5	Compliance with the Standards for Oxygen Content.	8/29/2008	5/12/2010, 75 FR 26653	Submitted on February 3, 2009. See 40 CFR 52.220(c)(375)(i)(A)(1).
2262.6	Prohibition of MTBE and Oxygenates Other Than Ethanol in California Gasoline Starting December 31, 2003.	4/9/2005	5/12/2010, 75 FR 26653	Submitted on February 3, 2009. See 40 CFR 52.220(c)(375)(i)(A)(1).
2262.9	Requirements Regarding Denatured Ethanol Intended for Use as a Blend Component in California Gasoline.	8/29/2008	5/12/2010, 75 FR 26653	Submitted on February 3, 2009. See 40 CFR 52.220(c)(375)(i)(A)(1).
2263	Sampling Procedures and Test Methods.	8/29/2008	5/12/2010, 75 FR 26653	Submitted on February 3, 2009. See 40 CFR 52.220(c)(375)(i)(A)(1).
2263.7	Multiple Notification Requirements.	8/29/2008	5/12/2010, 75 FR 26653	Submitted on February 3, 2009. See 40 CFR 52.220(c)(375)(i)(A)(1).
2264	Designated Alternative Limits.	8/20/2001	5/12/2010, 75 FR 26653	Submitted on February 3, 2009. See 40 CFR 52.220(c)(375)(i)(A)(1).
2264.2	Election of Applicable Limit for Gasoline Supplied From a Production or Import Facility.	8/29/2008	5/12/2010, 75 FR 26653	Submitted on February 3, 2009. See 40 CFR 52.220(c)(375)(i)(A)(1).
2265	Gasoline Subject to PM Alternative Specifications Based on the California Predictive Model.	8/29/2008	5/12/2010, 75 FR 26653	Submitted on February 3, 2009. See 40 CFR 52.220(c)(375)(i)(A)(1).
2265.1	Offsetting Emissions Associated with Higher Sulfur Levels.	8/29/2008	5/12/2010, 75 FR 26653	Submitted on February 3, 2009. See 40 CFR 52.220(c)(375)(i)(A)(1).
2265.5	Alternative Emission Reduction Plan (AERP).	8/29/2008	5/12/2010, 75 FR 26653	Submitted on February 3, 2009. See 40 CFR 52.220(c)(375)(i)(A)(1).
2266	Certified Gasoline Formulations Resulting in Equivalent Emission Reductions Based on Motor Vehicle Emission Testing.	8/29/2008	5/12/2010, 75 FR 26653	Submitted on February 3, 2009. See 40 CFR 52.220(c)(375)(i)(A)(1).
2266.5	Requirements Pertaining to California Reformulated Gasoline Blendstock for Oxygen Blending (CARBOB) and Downstream Blending.	8/29/2008	5/12/2010, 75 FR 26653	Submitted on February 3, 2009. See 40 CFR 52.220(c)(375)(i)(A)(1).
2267	Exemptions for Gasoline Used in Test Programs.	9/2/2000	5/12/2010, 75 FR 26653	Submitted on June 15, 2004. See 40 CFR 52.220(c)(374)(i)(A)(1).

TABLE 1—EPA-APPROVED STATUTES AND STATE REGULATIONS [1]—Continued

State citation	Title/subject	State effective date	EPA approval date	Additional explanation
2268	Liability of Persons Who Commit Violations Involving Gasoline That has Not Yet Been Sold or Supplied to a Motor Vehicle.	9/2/2000	5/12/2010, 75 FR 26653	Submitted on June 15, 2004. See 40 CFR 52.220(c)(374)(i)(A)(1).
2269	Submittal of Compliance Plans.	12/24/2002	5/12/2010, 75 FR 26653	Submitted on June 15, 2004. See 40 CFR 52.220(c)(374)(i)(A)(1).
2270	Testing and Recordkeeping.	8/29/2008	5/12/2010, 75 FR 26653	Submitted on February 3, 2009. See 40 CFR 52.220(c)(375)(i)(A)(1).
2271	Variances	8/29/2008	5/12/2010, 75 FR 26653	Submitted on February 3, 2009. See 40 CFR 52.220(c)(375)(i)(A)(1).
2272	CaRFP Phase 3 Standards for Qualifying Small Refiners.	5/1/2003	5/12/2010, 75 FR 26653	Submitted on June 15, 2004. See 40 CFR 52.220(c)(374)(i)(A)(1).
2273	Labeling of Equipment Dispensing Gasoline Containing MTBE.	8/29/2008	5/12/2010, 75 FR 26653	Submitted on February 3, 2009. See 40 CFR 52.220(c)(375)(i)(A)(1).
2273.5	Documentation Provided with Delivery of Gasoline to Retail Outlets.	5/1/2003	5/12/2010, 75 FR 26653	Submitted on June 15, 2004. See 40 CFR 52.220(c)(374)(i)(A)(1).
Title 13 (Motor Vehicles), Division 3 (Air Resources Board), Chapter 5 (Standards for Motor Vehicle Fuels); Article 2 (Standards for Diesel Fuel)				
2281	Sulfur Content of Diesel Fuel.	8/4/2005	5/12/2010, 75 FR 26653	Submitted on February 3, 2009. See 40 CFR 52.220(c)(376)(i)(A)(1).
2282	Aromatic Hydrocarbon Content of Diesel Fuel.	8/4/2005	5/12/2010, 75 FR 26653	Submitted on February 3, 2009. See 40 CFR 52.220(c)(376)(i)(A)(1).
2284	Lubricity of Diesel Fuel.	8/4/2005	5/12/2010, 75 FR 26653	Submitted on February 3, 2009. See 40 CFR 52.220(c)(376)(i)(A)(1).
2285	Exemption from Diesel Fuel Requirements for Military Specification Fuels Used in Qualifying Military Vehicles.	8/14/2004	5/12/2010, 75 FR 26653	Submitted on February 3, 2009. See 40 CFR 52.220(c)(376)(i)(A)(1).
Title 13 (Motor Vehicles), Division 3 (Air Resources Board), Chapter 5 (Standards for Motor Vehicle Fuels); Article 4 (Sampling and Test Procedures)				
2296	Motor Fuel Sampling Procedures.	10/14/1992	8/21/1995, 60 FR 43379	Submitted on November 15, 1994. See 40 CFR 52.220(c)(204)(i)(A)(3).
2297	Test Method for the Determination of the Reid Vapor Pressure Equivalent Using an Automated Vapor Pressure Test Instrument.	9/17/1991	8/21/1995, 60 FR 43379	Submitted on November 15, 1994. See 40 CFR 52.220(c)(204)(i)(A)(3).

TABLE 1—EPA-APPROVED STATUTES AND STATE REGULATIONS [1]—Continued

State citation	Title/subject	State effective date	EPA approval date	Additional explanation
Title 13 (Motor Vehicles), Division 3 (Air Resources Board), Chapter 5.1 (Standards for Fuels for Nonvehicular Sources)				
2299.3	Airborne Toxic Control Measure for Auxiliary Diesel Engines Operated on Ocean-Going Vessels At-Berth in a California Port.	1/2/2009	81 FR 39424, 6/16/2016	Requires that any person who owns, operates, container vessel, passenger vessel, or refrigerated cargo vessel that visits a California port comply with section 93118.3 relating to the operation of auxiliary diesel engines on OGV at-berth in a California port. Also applies to any person who owns or operates a port or terminal located at a California port where container, passenger or refrigerated cargo vessels visit.
Title 13 (Motor Vehicles), Division 3 (Air Resources Board), Chapter 9 (Off-Road Vehicles and Engines Pollution Control Devices), Article 1 (Small Off-Road Engines)				
2401(a)(13), (36), (41), (51), (52).	Definitions	5/5/2010	81 FR 39424, 6/16/2016	Definitions for ''eight-hour workday,'' ''professional level,'' ''standard battery package,'' ''zero-emission equipment credits,'' and ''zero-emission equipment engine family.''
2403(b)(2), (b)(3), (b)(4), (d), (e)(1).	Exhaust Emission Standards and Test Procedures—Small Off-Road Engines.	5/5/2010	81 FR 39424, 6/16/2016	Low-emitting blue sky series engine requirements, evaporative emission requirements, test procedures.
2403(b)(2)(B) and (d)	Exhaust Emission Standards and Test Procedures—Small Off-Road Engines.	1/10/2013	82 FR 14446, 3/21/2017	Amends certain certification requirements and test procedures.
2404(a)	Emission Control Labels and Consumer Information—1995 and Later Small Off-Road Engines.	11/15/2006	81 FR 39424, 6/16/2016	The requirements in section 2404 recognize the certain emission-critical or emission-related parts must be properly identified and maintained in order for engines to meet the applicable emissions standards and that information regarding engines' emissions levels may influence consumer choice.
2404(m)(1), (m)(2), (m)(3).	Emission Control Labels and Consumer Information—1995 and Later Small Off-Road Engines.	5/5/2010	81 FR 39424, 6/16/2016	Zero-emission equipment label content and placement requirements.
2404(c)(4)(A)	Emission Control Labels and Consumer Information—1995 and Later Small Off-Road Engines.	1/10/2013	82 FR 14446, 3/21/2017	Amends the rule to revise certain engine label content requirements.
2405(b)(1), (b)(2), (h)(1), (h)(2).	Defects Warranty Requirements for 1995 and Later Small Off-Road Engines.	5/5/2010	81 FR 39424, 6/16/2016	Zero-emission equipment warranty requirements.
2406(b)(1), (b)(2)	Emission Control System Warranty Statement.	5/5/2010	81 FR 39424, 6/16/2016	Warranty contact requirement.
2407(a)(7)	New Engine Compliance and Production Line Testing—New Small Off-Road Engine Selection, Evaluation, and Enforcement Action.	1/10/2013	82 FR 14446, 3/21/2017	Specifies use of certain test procedures.

TABLE 1—EPA-APPROVED STATUTES AND STATE REGULATIONS [1]—Continued

State citation	Title/subject	State effective date	EPA approval date	Additional explanation
2408(b)(2), (d)(4), (f)(1), (f)(3), (f)(4), (f)(5), (g)(1)(E), (i)(3), (i)(7).	Emission Reduction Credits—Certification Averaging, Banking, and Trading Provisions.	5/5/2010	81 FR 39424, 6/16/2016	Limits on use of certification emission credits, certain reporting requirements.
2408.1	Emission Reduction Credits—Zero-Emission Equipment Credits Averaging, Banking, and Trading Provisions.	5/5/2010	81 FR 39424, 6/16/2016	Applicability; general provisions; averaging, banking, and trading provisions; credit calculation and compliance provisions; use of zero-emission equipment credit; record-keeping and reporting.
2409(a), (b)(1), (b)(2), (b)(5), (b)(6), (d)(3).	Emission Reduction Credits—Production Credit Program for New Engines.	5/5/2010	81 FR 39424, 6/16/2016	Applicability; general provisions; certain banking provisions.
Title 13 (Motor Vehicles), Division 3 (Air Resources Board), Chapter 9 (Off-Road Vehicles and Engines Pollution Control Devices), Article 3 (Off-Highway Recreational Vehicles and Engines)				
2411(a)(1), (a)(13), (a)(17), (a)(18), (a)(19).	Definitions	8/15/2007	81 FR 39424, 6/16/2016	Definitions for ''all-terrain vehicle,'' off-highway recreational vehicle engines,'' ''off-road sport vehicle,'' ''off-road utility vehicle,'' ''sand car.''
2412	Emission Standards and Test Procedures—New Off-Highway Recreational Vehicles and Engines.	8/15/2007	81 FR 39424, 6/16/2016	Exhaust and evaporative emissions standards for off-highway recreational vehicles and engines used in such vehicles produced on or after January 1, 1997 that are sold, leased, used, or introduced into commerce in California; test procedures.
2412(c) and (d)(1)	Emission Standards and Test Procedures—New Off-Highway Recreational Vehicles and Engines.	1/10/2013	82 FR 14446, 3/21/2017	Updates references to test procedures.
2413	Emission Control Labels—New Off-Highway Recreational Vehicles.	8/15/2007	81 FR 39424, 6/16/2016	Provisions related to applicability, and label content and location.
2416	Applicability	4/1/2015	83 FR 23232, 5/18/2018	Sections 2416–2419.4 establish certain evaporative emission standards for off-highway recreational vehicles.
2417	Definitions	4/1/2015	83 FR 23232, 5/18/2018	Sections 2416–2419.4 establish certain evaporative emission standards for off-highway recreational vehicles.
2418	Evaporative Emission Standards and Test Procedures.	4/1/2015	83 FR 23232, 5/18/2018	Sections 2416–2419.4 establish certain evaporative emission standards for off-highway recreational vehicles.
2419	Evaporative Emission Control Labels—New Off-Highway Recreational Vehicles.	4/1/2015	83 FR 23232, 5/18/2018	Sections 2416–2419.4 establish certain evaporative emission standards for off-highway recreational vehicles.
2419.1	Defect Warranty Requirements for Evaporative Emissions Control Systems of 2018 and Later Model Year Off-Highway Recreational Vehicles.	4/1/2015	83 FR 23232, 5/18/2018	Sections 2416–2419.4 establish certain evaporative emission standards for off-highway recreational vehicles.

TABLE 1—EPA-APPROVED STATUTES AND STATE REGULATIONS [1]—Continued

State citation	Title/subject	State effective date	EPA approval date	Additional explanation
2419.2	Evaporative Emissions Control System Warranty Statement.	4/1/2015	83 FR 23232, 5/18/2018	Sections 2416–2419.4 establish certain evaporative emission standards for off-highway recreational vehicles.
2419.3	New Off-Highway Recreational Vehicle Evaporative Emission Standards, Enforcement and Recall Provisions, Warranty, Quality Audit, and New Engine Testing.	4/1/2015	83 FR 23232, 5/18/2018	Sections 2416–2419.4 establish certain evaporative emission standards for off-highway recreational vehicles.
2419.4	Evaporative Emissions Control System Testing and Certification Requirement.	4/1/2015	83 FR 23232, 5/18/2018	Sections 2416–2419.4 establish certain evaporative emission standards for off-highway recreational vehicles.
Title 13 (Motor Vehicles), Division 3 (Air Resources Board), Chapter 9 (Off-Road Vehicles and Engines Pollution Control Devices), Article 4 (Off-Road Compression-Ignition Engines and Equipment)				
2420	Applicability	1/6/2006	81 FR 39424, 6/16/2016	Applies to new heavy-duty off-road CI engines produced on or after January 1, 1996 and all other new 2000 model year and later off-road CI engines, except those covered by the preemption provisions in CAA section 209(e)(1). Certification required for new engines subject to 13 CCR chapter 9, article 4.
2421	Definitions	1/6/2006	81 FR 39424, 6/16/2016	Defined terms in addition to hose in 13 CCR § 1900(b).
2421(a)(1)–(a)(4), (a)(15), (a)(19)–(a)(65).	Definitions	1/10/2013	82 FR 14446, 3/21/2017	Amends and adds certain defined terms.
2423	Exhaust Emission Standards and Test Procedures—Off-Road Compression-Ignition Engines.	1/6/2006	81 FR 39424, 6/16/2016	Exhaust emissions standards (tiers 1, 2, 3 and 4), upper limits for family emission limits (tiers 1, 2, 3 and 4), low-emitting blue sky series engine requirements, crankcase emissions provisions, early certification provisions, prohibition on defeat devices, test procedures, recordkeeping and compliance calculations, economic hardship provisions, allowance for production of engines, labeling requirements,
2423(a), (b) (excluding optional alternative NO_X + NMHC standards and associated family emission limits), (c), (d), (e), (f), (g), (h), (j), (k), (l) and (m).	Exhaust Emission Standards and Test Procedures—Off-Road Compression-Ignition Engines.	1/10/2013	82 FR 14446, 3/21/2017	Amends the rule to harmonize certain aspects of the California emissions requirements with the corresponding federal emissions requirements.
2424	Emission Control Labels—1996 and Later Off-Road Compression-Ignition Engines.	1/6/2006	81 FR 39424, 6/16/2016	Requirements on manufacturers to affix a label on each production engine (or equipment) to provide the engine or equipment owner and service mechanic with information necessary for the proper maintenance of these parts in customer use.

TABLE 1—EPA-APPROVED STATUTES AND STATE REGULATIONS [1]—Continued

State citation	Title/subject	State effective date	EPA approval date	Additional explanation
2424(a)	Emission Control Labels—1996 and Later Off-Road Compression-Ignition Engines.	11/15/2006	81 FR 39424, 6/16/2016	The requirements of section 2424 recognize that certain emissions-critical or emissions-related parts must be properly identified and maintained in order for engines to meet the applicable emissions standards.
2424(a), (b), (c) and (l).	Emission Control Labels—1996 and Later Off-Road Compression-Ignition Engines.	1/10/2013	82 FR 14446, 3/21/2017	Amends the rule to reflect updated test procedures and to add provisions prohibiting altering or removal of emission control information labels except under certain circumstances.
2425	Defects Warranty Requirements for 1996 and Later Off-Road Compression-Ignition Engines.	1/6/2006	81 FR 39424, 6/16/2016	Applies to new 1996–1999 model year heavy-duty off-road CI engines and new 2000 and later model year CI engines.
2425(e)	Defects Warranty Requirements for 1996 and Later Off-Road Compression-Ignition Engines.	11/15/2006	81 FR 39424, 6/16/2016	Requirement on manufacturers to furnish with each new engine written instructions for the maintenance and use of the engine by the owner.
2425(a)	Defects Warranty Requirements for 1996 and Later Off-Road Compression-Ignition Engines.	1/10/2013	82 FR 14446, 3/21/2017	Amends the rule to apply certain federal warranty-related requirements to 2011 and later model-year compression-ignition engines.
2425.1	Defect Investigation and Reporting Requirements.	1/10/2013	82 FR 14446, 3/21/2017	Amends the rule to reflect certain updated test procedures.
2426	Emission Control System Warranty Statement.	1/6/2006	81 FR 39424, 6/16/2016	Requires manufacturers to furnish a specific warranty statements with each 1996–1999 heavy-duty off-road CI engine.
2426(a) and (b)	Emission Control System Warranty Statement.	1/10/2013	82 FR 14446, 3/21/2017	Amends an existing SIP rule to make changes conforming to the changes made in 13 CCR §2423.
2427	Production Engine Testing, Selection, Evaluation, and Enforcement Action.	1/6/2006	81 FR 39424, 6/16/2016	Compliance test procedures, quality-audit test procedures, selective enforcement audit requirements.
2427(c)	Production Engine Testing, Selection, Evaluation, and Enforcement Action.	1/10/2013	82 FR 14446, 3/21/2017	Amends an existing SIP rule to reflect updated test procedures.
Title 13 (Motor Vehicles), Division 3 (Air Resources Board), Chapter 9 (Off-Road Vehicles and Engines Pollution Control Devices), Article 4.5 (Off-Road Large Spark-Ignition Engines)				
2430	Applicability	5/12/2007	81 FR 39424, 6/16/2016	Applies to LSI off-road engines 25 horsepower or greater after 1/1/2001 and all equipment and vehicles after 1/1/2001 that use such engines. On 1/1/2007, applicability remains the same but is defined in terms of kW (*i.e.,* 19 kW and above).
2431(a), (a)(19), (a)(28).	Definitions	5/12/2007	81 FR 39424, 6/16/2016	Definitions of ''Family Emission Level or FEL'' and ''Off-Road Large Spark-Ignition Engines'' or ''LSI Engines.''
2433	Emission Standards and Test Procedures—Off-Road Large Spark Ignition Engines.	5/12/2007	81 FR 39424, 6/16/2016	New off-road LSI exhaust, crankcase, and evaporative emission standards and test procedures.

TABLE 1—EPA-APPROVED STATUTES AND STATE REGULATIONS [1]—Continued

State citation	Title/subject	State effective date	EPA approval date	Additional explanation
2433(b)(1)(A), (b)(2), (b)(3), (b)(4), (b)(5), (c) and (d).	Emission Standards and Test Procedures—Off-Road Large Spark Ignition Engines.	10/20/2009	82 FR 14446, 3/21/2017	Amends the rule creating two new subcategories of LSI engines, establishing exhaust and evaporative emissions standards for new 2011 and subsequent model year LSI engines in each of these new subcategories, and establishing more stringent exhaust emissions standards for 2015 and subsequent model year LSI engines with engine displacement 825cc <1.0 L.
2433(c) and (d)(1)	Emission Standards and Test Procedures—Off-Road Large Spark Ignition Engines.	1/10/2013	82 FR 14446, 3/21/2017	Amends the rule to refer to updated test procedures.
2434(c)	Emission Control Labels—2001 and Later Off-Road Large Spark-Ignition Engines.	5/12/2007	81 FR 39424, 6/16/2016	Label content and location requirements.
2438(e)(7)	In-Use Compliance Program.	5/12/2007	81 FR 39424, 6/16/2016	Credit calculation.
Title 13 (Motor Vehicles), Division 3 (Air Resources Board), Chapter 9 (Off-Road Vehicles and Engines Pollution Control Devices), Article 4.7 (Spark-Ignition Marine Engines)				
2440(a)(3)	Applicability	8/16/2009	81 FR 39424, 6/16/2016	Exemption for spark-ignition sterndrive/inboard marine engines used solely for competition.
2442(a)(1), (a)(2), (b), (c), (d), (e), (f), (g), (h).	Emissions Standards	8/16/2009	81 FR 39424, 6/16/2016	Model year 2001 and later model year spark-ignition personal watercraft and outboard marine engines; model year 2003 and later model year spark-ignition sterndrive/inboard marine engines; Not-to-Exceed (NTE) limits; voluntary standards; new replacement engine requirements for manufacturers; test equipment and test procedures.
2443.1(b)(1), (c)(2)(B), (c)(4)(B), (c)(4)(D), (c)(4)(G), (c)(4)(H), (d)(4)(B).	Emission Control Labels—Model Year 2001 and Later Spark-Ignition Marine Engines.	8/16/2009	81 FR 39424, 6/16/2016	Requirements related to emission control labels.
2443.2(b)(1), (c)(1), (c)(2), (e).	Consumer/Environmental Label Requirements.	8/16/2009	81 FR 39424, 6/16/2016	Label requirements for certified model year 2001 and later spark-ignition personal watercraft and outboard marine engines and certified model year 2003 and later spark-ignition sterndrive/inboard engines.
2444.1(a), (b)(3)(B), (b)(3)(E), (b)(3)(G), (e)(4)(A)(1. Through 10.), (e)(4)(B), (e)(4)(C)(1., 2., and 3.).	In-Use Compliance Testing and Recall Regulations—Model Year 2001 and Later Spark-Ignition Marine Engines.	8/16/2009	81 FR 39424, 6/16/2016	Recordkeeping and reporting requirements.

TABLE 1—EPA-APPROVED STATUTES AND STATE REGULATIONS [1]—Continued

State citation	Title/subject	State effective date	EPA approval date	Additional explanation
2444.2	On-Board Engine Malfunction Detection System Requirements—Model Year 2007 and Later Spark-Ignition Sterndrive/Inboard Marine Engines.	8/16/2009	81 FR 39424, 6/16/2016	General requirements; monitoring requirements; additional audio/visual alert device activation and diagnostic trouble code storage protocol; tampering protection; certification documentation; testing, standardization, and implementation schedule.
2445.1(a), (c)(1), (c)(2), (c)(3), (e)(10), (e)(11), (g)(2)(A).	Defects Warranty Requirements for Model Year 2001 and Later Spark-Ignition Marine Engines.	8/16/2009	81 FR 39424, 6/16/2016	Warranty requirements.
2445.2(a)	Emission Control Warranty Statements.	8/16/2009	81 FR 39424, 6/16/2016	Emission control warranty statement requirements.
2446(a), (b)(4)(B), (c)(1)(A), (c)(1)(B), (c)(2)(A), (c)(3)(D), (c)(3)(E), (d)(3)(D), (d)(5), (e).	2001 and Later Model Year Production-Line Test Procedures and Selective Enforcement Auditing Regulations for Spark-Ignition Marine Engines.	8/16/2009	81 FR 39424, 6/16/2016	Applicability provision; certain quality-audit line test procedures for 2001 and later model years; test procedures; selective enforcement auditing regulations.
2447	California Exhaust Emission Standards and Test Procedures for 2001 Model Year and Later Spark-Ignition Marine Engines.	1/10/2013	82 FR 14446, 3/21/2017	Specifies certain test procedures.
Title 13 (Motor Vehicles), Division 3 (Air Resources Board), Chapter 9 (Off-Road Vehicles and Engines Pollution Control Devices), Article 4.8 (In-Use Off-Road Diesel-Fueled Fleets)				
2449, excluding (d)(2)	General Requirements for In-Use Off-Road Diesel-Fueled Fleets.	12/14/2011	81 FR 39424, 6/16/2016	Applicability, definitions, performance requirements (different requirements apply to large, medium and small fleets), compliance date extension provision, labeling requirements, reporting and recordkeeping requirements. Excluded subsection relates to idling limits.
2449.1	Performance Requirements.	12/14/2011	81 FR 39424, 6/16/2016	Establishes fleet average requirements and compliance dates, BACT provisions, credit provisions.
2449.2, excluding (f)(4).	Surplus Off-Road Opt-In for NO_X (SOON) Program.	12/14/2011	81 FR 39424, 6/16/2016	Purpose is to achieve additional reductions of NO_X from in-use off-road diesel-fueled vehicles beyond those achieved through implementation of the requirements in 13 CCR §§2449 and 2449.1. Applicability, definitions, requirements, SOON targets, local air district opt-in provisions.

TABLE 1—EPA-APPROVED STATUTES AND STATE REGULATIONS [1]—Continued

State citation	Title/subject	State effective date	EPA approval date	Additional explanation
Title 13 (Motor Vehicles), Division 3 (Air Resources Board), Chapter 9 (Off-Road Vehicles and Engines Pollution Control Devices), Article 5 (Portable Engine and Equipment Registration)				
2451	Applicability	9/12/2007	81 FR 39424, 6/16/2016	Voluntary registration program for owners or portable engines or equipment units, with certain exceptions. If not registered under this program, the engine or equipment units shall be subject to district permitting requirements pursuant to district regulations.
2452	Definitions	9/12/2007	81 FR 39424, 6/16/2016	Definitions that apply to the portable engine and equipment registration regulations.
2453	Application Process	9/12/2007	81 FR 39424, 6/16/2016	To be considered for registration, portable engines or equipment units must meet the requirements in article 5, including the application-related requirements in this section.
2455, excluding (a) and (b).	General Requirements.	9/12/2007	81 FR 39424, 6/16/2016	Provisions related to operation of portable engines and equipment units during emergency events; PSD notification requirements if the registered equipment unit operates at a major stationary source. Excluded subsections relate to attainment or maintenance of ambient air quality standards, nuisance, and opacity.
2456, excluding (a), (d)(3), (d)(5), and (d)(6).	Engine Requirements	9/12/2007	81 FR 39424, 6/16/2016	Various requirements specified for different categories of engines. Excluded subsections relate to opacity limits, fuel specifications, and daily and annual mass (per engine) limits.
2458	Recordkeeping and Reporting.	9/12/2007	81 FR 39424, 6/16/2016	Recordkeeping and reporting requirements for owners of registered portable engines and equipment units.
2459	Notification	9/12/2007	81 FR 39424, 6/16/2016	In most instances, if a registered equipment unit will be at a location for more than five days, the owner or operator of that equipment must notify the district in writing.
2460	Inspections and Testing.	9/12/2007	81 FR 39424, 6/16/2016	Authorization for CARB to conduct testing both before and after registration in the program. Districts must inspect all register engines and equipment units for which the district has been designated as the home district. Test methods are specified.
2461	Fees	9/12/2007	81 FR 39424, 6/16/2016	Provisions establishing fees for registration, renewal, and associated administrative tasks.
2462	Duration of Registration.	9/12/2007	81 FR 39424, 6/16/2016	Registrations and renewal are generally valid for three years from the date of issuance.

TABLE 1—EPA-APPROVED STATUTES AND STATE REGULATIONS [1]—Continued

State citation	Title/subject	State effective date	EPA approval date	Additional explanation
Title 13 (Motor Vehicles), Division 3 (Air Resources Board), Chapter 9 (Off-Road Vehicles and Engines Pollution Control Devices), Article 7 (Certification Procedures for Aftermarket Parts for Off-Road Vehicles, Engines, Equipment)				
2474(e), (i)(1)	Add-On Parts and Modified Parts.	8/16/2009	81 FR 39424, 6/16/2016	Incorporation of procedures for exemptions of add-on and modified parts for off-road categories.
Title 13 (Motor Vehicles), Division 3 (Air Resources Board), Chapter 9 (Off-Road Vehicles and Engines Pollution Control Devices), Article 8 (Off-Road Airborne Toxic Control Measures)				
2477	Airborne Toxic Control Measure for In-Use Diesel-Fueled Transport Refrigeration Units (TRU) and TRU Generator Sets, and Facilities Where TRUs Operate.	10/15/2012	83 FR 23232, 5/18/2018	Sections 2477–2477.21 establish emissions standards and other requirements relating to the control of emissions from in-use diesel-fueled transport refrigeration units (TRUs), TRU generator sets, and facilities where TRUs operate.
2477.1	Purpose	10/15/2012	83 FR 23232, 5/18/2018	Sections 2477–2477.21 establish emissions standards and other requirements relating to the control of emissions from in-use diesel-fueled transport refrigeration units (TRUs), TRU generator sets, and facilities where TRUs operate.
2477.2	Applicability	10/15/2012	83 FR 23232, 5/18/2018	Sections 2477–2477.21 establish emissions standards and other requirements relating to the control of emissions from in-use diesel-fueled transport refrigeration units (TRUs), TRU generator sets, and facilities where TRUs operate.
2477.3	Exemptions	10/15/2012	83 FR 23232, 5/18/2018	Sections 2477–2477.21 establish emissions standards and other requirements relating to the control of emissions from in-use diesel-fueled transport refrigeration units (TRUs), TRU generator sets, and facilities where TRUs operate.
2477.4	Definitions	10/15/2012	83 FR 23232, 5/18/2018	Sections 2477–2477.21 establish emissions standards and other requirements relating to the control of emissions from in-use diesel-fueled transport refrigeration units (TRUs), TRU generator sets, and facilities where TRUs operate.
2477.5	Requirements for Owners or Owner/Operators.	10/15/2012	83 FR 23232, 5/18/2018	Sections 2477–2477.21 establish emissions standards and other requirements relating to the control of emissions from in-use diesel-fueled transport refrigeration units (TRUs), TRU generator sets, and facilities where TRUs operate.
2477.6	Requirements for Terminal Operators.	10/15/2012	83 FR 23232, 5/18/2018	Sections 2477–2477.21 establish emissions standards and other requirements relating to the control of emissions from in-use diesel-fueled transport refrigeration units (TRUs), TRU generator sets, and facilities where TRUs operate.

TABLE 1—EPA-APPROVED STATUTES AND STATE REGULATIONS [1]—Continued

State citation	Title/subject	State effective date	EPA approval date	Additional explanation
2477.7	Requirements for Drivers.	10/15/2012	83 FR 23232, 5/18/2018	Sections 2477–2477.21 establish emissions standards and other requirements relating to the control of emissions from in-use diesel-fueled transport refrigeration units (TRUs), TRU generator sets, and facilities where TRUs operate.
2477.8	Requirements for Freight Brokers and Freight Forwarders.	10/15/2012	83 FR 23232, 5/18/2018	Sections 2477–2477.21 establish emissions standards and other requirements relating to the control of emissions from in-use diesel-fueled transport refrigeration units (TRUs), TRU generator sets, and facilities where TRUs operate.
2477.9	Requirements for Motor Carriers.	10/15/2012	83 FR 23232, 5/18/2018	Sections 2477–2477.21 establish emissions standards and other requirements relating to the control of emissions from in-use diesel-fueled transport refrigeration units (TRUs), TRU generator sets, and facilities where TRUs operate.
2477.10	Requirements for California-Based Shippers.	10/15/2012	83 FR 23232, 5/18/2018	Sections 2477–2477.21 establish emissions standards and other requirements relating to the control of emissions from in-use diesel-fueled transport refrigeration units (TRUs), TRU generator sets, and facilities where TRUs operate.
2477.11	Requirements for California-Based Receivers.	10/15/2012	83 FR 23232, 5/18/2018	Sections 2477–2477.21 establish emissions standards and other requirements relating to the control of emissions from in-use diesel-fueled transport refrigeration units (TRUs), TRU generator sets, and facilities where TRUs operate.
2477.12	Requirements for Lessors and Lessees.	10/15/2012	83 FR 23232, 5/18/2018	Sections 2477–2477.21 establish emissions standards and other requirements relating to the control of emissions from in-use diesel-fueled transport refrigeration units (TRUs), TRU generator sets, and facilities where TRUs operate.
2477.13	Requirements for TRU and TRU Gen Set Original Equipment Manufacturers.	10/15/2012	83 FR 23232, 5/18/2018	Sections 2477–2477.21 establish emissions standards and other requirements relating to the control of emissions from in-use diesel-fueled transport refrigeration units (TRUs), TRU generator sets, and facilities where TRUs operate.
2477.14	Requirements for TRU, TRU Gen Set, and TRU-Equipped Truck and Trailer Dealers.	10/15/2012	83 FR 23232, 5/18/2018	Sections 2477–2477.21 establish emissions standards and other requirements relating to the control of emissions from in-use diesel-fueled transport refrigeration units (TRUs), TRU generator sets, and facilities where TRUs operate.

TABLE 1—EPA-APPROVED STATUTES AND STATE REGULATIONS [1]—Continued

State citation	Title/subject	State effective date	EPA approval date	Additional explanation
2477.15	Requirements for Repair Shops Located in California that Work on TRUs or TRU Gen Sets.	10/15/2012	83 FR 23232, 5/18/2018	Sections 2477–2477.21 establish emissions standards and other requirements relating to the control of emissions from in-use diesel-fueled transport refrigeration units (TRUs), TRU generator sets, and facilities where TRUs operate.
2477.16	Requirements for Engine Rebuilders.	10/15/2012	83 FR 23232, 5/18/2018	Sections 2477–2477.21 establish emissions standards and other requirements relating to the control of emissions from in-use diesel-fueled transport refrigeration units (TRUs), TRU generator sets, and facilities where TRUs operate.
2477.17	Facility Reporting	10/15/2012	83 FR 23232, 5/18/2018	Sections 2477–2477.21 establish emissions standards and other requirements relating to the control of emissions from in-use diesel-fueled transport refrigeration units (TRUs), TRU generator sets, and facilities where TRUs operate.
2477.18	Prohibitions	10/15/2012	83 FR 23232, 5/18/2018	Sections 2477–2477.21 establish emissions standards and other requirements relating to the control of emissions from in-use diesel-fueled transport refrigeration units (TRUs), TRU generator sets, and facilities where TRUs operate.
2477.19	Penalties	10/15/2012	83 FR 23232, 5/18/2018	Sections 2477–2477.21 establish emissions standards and other requirements relating to the control of emissions from in-use diesel-fueled transport refrigeration units (TRUs), TRU generator sets, and facilities where TRUs operate.
2477.20	Authority to Request Additional Information.	10/15/2012	83 FR 23232, 5/18/2018	Sections 2477–2477.21 establish emissions standards and other requirements relating to the control of emissions from in-use diesel-fueled transport refrigeration units (TRUs), TRU generator sets, and facilities where TRUs operate.
2477.21	Severability	10/15/2012	83 FR 23232, 5/18/2018	Sections 2477–2477.21 establish emissions standards and other requirements relating to the control of emissions from in-use diesel-fueled transport refrigeration units (TRUs), TRU generator sets, and facilities where TRUs operate.

TABLE 1—EPA-APPROVED STATUTES AND STATE REGULATIONS [1]—Continued

State citation	Title/subject	State effective date	EPA approval date	Additional explanation
2479, excluding (e)(2) and (e)(4).	Regulation for Mobile Cargo Handling Equipment at Ports and Intermodal Rail Yards.	12/31/2006	81 FR 39424, 6/16/2016	Applies to any person who conducts business in California who sells, offers for sale, leases, rents, purchases, owns or operates any CI mobile cargo handling equipment that operates at any California port or intermodal rail yard. Includes exemptions, definitions, performance standards for newly purchased leased or rented yard trucks and non-yard truck cargo handling equipment, provisions for compliance extensions and alternative compliance plans, recordkeeping and reporting requirements, test methods. Excluded subsections relate to in-use performance standards for yard trucks, and fuel requirements.
2479(a), (b), (c), (d), (e)(1), (e)(3), (e)(5), (f)(1), (f)(2), (f)(3), (f)(6), (h)(1), (i), (j)(1), (j)(2), (j)(3), (k), (l), (m), (n), (o), (p), (q), (r).	Regulation for Mobile Cargo Handling Equipment at Ports and Intermodal Rail Yards.	10/14/2012	81 FR 39424, 6/16/2016	Amendments to exemptions, definitions, performance standards for newly purchased leased or rented equipment and in-use performance standards for non-yard truck mobile CHE, provisions for compliance extensions and alternative compliance plans, recordkeeping and reporting requirements, test methods.
Title 13 (Motor Vehicles), Division 3 (Air Resources Board), Chapter 10 (Mobile Source Operational Controls), Article 1 (Motor Vehicles)				
2485, excluding (c)(1)(A), (c)(1)(B), (c)(3)(B).	Airborne Toxic Control Measure to Limit Diesel-Fueled Commercial Motor Vehicle Idling.	11/15/2006	81 FR 39424, 6/16/2016	Establishes requirements to reduce emissions from idling of diesel-fueled commercial motor vehicles that operate in California with gross vehicle weight ratings greater than 10,000 pounds; exceptions; enforcement and penalty provisions; definitions. Excluded subsections relate to idling restrictions on drivers and a fuel-fired heater provision.
2485, subsections (c)(1)(A), (c)(1)(B) only.	Airborne Toxic Control Measure to Limit Diesel-Fueled Commercial Motor Vehicle Idling.	11/15/2006	82 FR 61178, 12/27/2017	Submitted December 9, 2011. Limits diesel vehicle idling to 5 minutes.
Title 13 (Motor Vehicles), Division 3 (Air Resources Board), Chapter 14 (Verification Procedures, Warranty and In-Use Compliance Requirements for In-Use Strategies to Control Emissions from Diesel Engines)				
2701	Definitions	1/1/2005	5/12/2010, 75 FR 26653	Submitted on February 3, 2009. See 40 CFR 52.220(c)(376)(i)(A)(1).

TABLE 1—EPA-APPROVED STATUTES AND STATE REGULATIONS [1]—Continued

State citation	Title/subject	State effective date	EPA approval date	Additional explanation
Title 13 (Motor Vehicles), Division 3 (Air Resources Board), Chapter 15 (Additional Off-Road Vehicles and Engines Pollution Control Requirements), Article 2 (Large Spark Ignition (LSI) Engines Fleet Requirements)				
2775	Applicability	12/14/2011	82 FR 14446, 3/21/2017	Applies to operators of certain off-road LSI engine forklifts, sweepers/scrubbers, industrial tow tractors or airport ground support equipment operated within the State of California. Exemptions provided for small fleets and certain other equipment. Includes definitions.
2775.1	Standards	12/14/2011	82 FR 14446, 3/21/2017	Establishes fleet average emission level standards with certain exceptions.
2775.2	Compliance Requirements for Fleet Operators.	12/14/2011	82 FR 14446, 3/21/2017	Compliance and recordkeeping requirements, provisions for extensions in compliance dates.
Title 13 (Motor Vehicles), Division 3 (Air Resources Board), Chapter 15 (Additional Off-Road Vehicles and Engines Pollution Control Requirements), Article 3 (Verification Procedure, Warranty, and In-Use Compliance Requirements for Retrofits to Control Emissions from Off-Road Large Spark-Ignition Engines)				
2783(d)(1)–(d)(4)	Emissions Reduction Testing Requirements.	1/10/2013	82 FR 14446, 3/21/2017	Specifies test fuels for emissions reduction testing purposes for gasoline-fueled, off-road, large spark-ignition engines.
2784(c)(1)–(c)(4)	Durability Demonstration Requirements.	1/10/2013	82 FR 14446, 3/21/2017	Specifies test fuels for durability demonstration purposes for gasoline-fueled, off-road, large spark-ignition engines.
Title 16 (Professional and Vocational Regulations), Division 33 (Bureau of Automotive Repair), Chapter 1 (Automotive Repair Dealers and Official Stations and Adjusters); Article 1 (General Provisions)				
3303.1	Public Access to License, Administrative Action, and Complaint Information.	7/20/2007	7/1/2010, 75 FR 38023	Submitted on June 5, 2009. See 40 CFR 52.220(c)(372)(i)(A)(1).
3303.2	Review of Applications for Licensure, Registration and Certification; Processing Time.	7/9/2003	7/1/2010, 75 FR 38023	Submitted on June 5, 2009. See 40 CFR 52.220(c)(372)(i)(A)(1).
Title 16 (Professional and Vocational Regulations), Division 33 (Bureau of Automotive Repair), Chapter 1 (Automotive Repair Dealers and Official Stations and Adjusters); Article 5.5 (Motor Vehicle Inspection Program)				
3340.1	Definitions	6/29/2006	7/1/2010, 75 FR 38023	Submitted on June 5, 2009. See 40 CFR 52.220(c)(372)(i)(A)(1).
3340.5	Vehicles Exempt from Inspections.	4/16/1990	1/8/1997, 62 FR 1150	Submitted on January 22, 1996. See 40 CFR 52.220(c)(234)(i)(A)(1)(iv).
3340.6	Vehicles Subject to Inspection upon Change of Ownership and Initial Registration in California.	4/16/1990	1/8/1997, 62 FR 1150	Submitted on January 22, 1996. See 40 CFR 52.220(c)(234)(i)(A)(1)(iv).
3340.7	Fee for Inspection at State Contracted Test-Only Facility.	8/17/1995	7/1/2010, 75 FR 38023	Submitted on June 5, 2009. See 40 CFR 52.220(c)(372)(i)(A)(1).
3340.9	Repair Assistance Program.	10/30/2000	7/1/2010, 75 FR 38023	Submitted on June 5, 2009. See 40 CFR 52.220(c)(372)(i)(A)(1).
3340.10	Licensing of Smog Check Stations.	7/26/1996	7/1/2010, 75 FR 38023	Submitted on June 5, 2009. See 40 CFR 52.220(c)(372)(i)(A)(1).

TABLE 1—EPA-APPROVED STATUTES AND STATE REGULATIONS [1]—Continued

State citation	Title/subject	State effective date	EPA approval date	Additional explanation
3340.15	General Requirements for Smog Check Stations.	7/9/2003	7/1/2010, 75 FR 38023	Submitted on June 5, 2009. See 40 CFR 52.220(c)(372)(i)(A)(1).
3340.16	Test-Only Station Requirements.	8/1/2007	7/1/2010, 75 FR 38023	Submitted on June 5, 2009. See 40 CFR 52.220(c)(372)(i)(A)(1).
3340.16.5	Test-and-Repair Station Requirements.	6/29/2006	7/1/2010, 75 FR 38023	Submitted on June 5, 2009. See 40 CFR 52.220(c)(372)(i)(A)(1).
3340.17	Test Equipment, Electronic Transmission, Maintenance and Calibration Requirements.	6/29/2006	7/1/2010, 75 FR 38023	Submitted on June 5, 2009. See 40 CFR 52.220(c)(372)(i)(A)(1).
3340.18	Gases and Blenders of Gases.	7/9/2003	7/1/2010, 75 FR 38023	Submitted on June 5, 2009. See 40 CFR 52.220(c)(372)(i)(A)(1).
3340.22	Smog Check Station Signs.	4/16/1990	1/8/1997, 62 FR 1150	Submitted on January 22, 1996. See 40 CFR 52.220(c)(234)(i)(A)(1)(iv).
3340.22.1	Smog Check Station Service Signs.	2/1/2001	7/1/2010, 75 FR 38023	Submitted on June 5, 2009. See 40 CFR 52.220(c)(372)(i)(A)(1).
3340.22.2	Smog Check Repair Cost Limit Sign.	2/1/2001	7/1/2010, 75 FR 38023	Submitted on June 5, 2009. See 40 CFR 52.220(c)(372)(i)(A)(1).
3340.22.3	Replacement of Signs	9/17/1992	1/8/1997, 62 FR 1150	Submitted on January 22, 1996. See 40 CFR 52.220(c)(234)(i)(A)(1)(iv).
3340.23	Licensed Smog Check Station That Ceases Operating As a Licensed Station.	6/23/1995	7/1/2010, 75 FR 38023	Submitted on June 5, 2009. See 40 CFR 52.220(c)(372)(i)(A)(1).
3340.24	Suspension, Revocation, and Reinstatement of Licenses.	6/23/1995	7/1/2010, 75 FR 38023	Submitted on June 5, 2009. See 40 CFR 52.220(c)(372)(i)(A)(1).
3340.28	Licensing and Qualifications of Technicians.	1/17/2009	7/1/2010, 75 FR 38023	Submitted on June 5, 2009. See 40 CFR 52.220(c)(372)(i)(A)(1).
3340.29	Licensing of Technicians.	1/17/2009	7/1/2010, 75 FR 38023	Submitted on June 5, 2009. See 40 CFR 52.220(c)(372)(i)(A)(1).
3340.30	General Requirements for Licensed Technicians.	6/23/1995	7/1/2010, 75 FR 38023	Submitted on June 5, 2009. See 40 CFR 52.220(c)(372)(i)(A)(1).
3340.31	Retraining of Licensed Technicians.	6/23/1995	7/1/2010, 75 FR 38023	Submitted on June 5, 2009. See 40 CFR 52.220(c)(372)(i)(A)(1).
3340.32	Standards for the Certification of Institutions Providing Retraining to Licensed Technicians or Prerequisite Training to Those Seeking to Become Licensed Technicians.	7/9/2003	7/1/2010, 75 FR 38023	Submitted on June 5, 2009. See 40 CFR 52.220(c)(372)(i)(A)(1).
3340.32.1	Standards for Decertification of Institutions Providing Retraining to Licensed Technicians or Prerequisite Training to Those Seeking to Become Licensed Technicians.	6/23/1995	7/1/2010, 75 FR 38023	Submitted on June 5, 2009. See 40 CFR 52.220(c)(372)(i)(A)(1).

TABLE 1—EPA-APPROVED STATUTES AND STATE REGULATIONS [1]—Continued

State citation	Title/subject	State effective date	EPA approval date	Additional explanation
3340.33	Standards for the Certification of Basic and Advanced Instructors Providing Retraining to Intern, Basic Area, and Advanced Emission Specialist Licensed Technicians or Prerequisite Training to Those Seeking to Become Intern, Basic Area, or Advanced Emission Specialist Licensed Technicians.	2/1/2001	7/1/2010, 75 FR 38023	Submitted on June 5, 2009. See 40 CFR 52.220(c)(372)(i)(A)(1).
3340.33.1	Standards for the Decertification and Recertification of Instructors Providing Retraining to Licensed Technicians or Prerequisite Training to Those Seeking to Become Licensed Technicians.	6/23/1995	7/1/2010, 75 FR 38023	Submitted on June 5, 2009. See 40 CFR 52.220(c)(372)(i)(A)(1).
3340.35	A Certificate of Compliance, Noncompliance, Repair Cost Waiver or an Economic Hardship Extension.	6/25/1998	7/1/2010, 75 FR 38023	Submitted on June 5, 2009. See 40 CFR 52.220(c)(372)(i)(A)(1).
3340.35.1	A Certificate of Compliance, Noncompliance, Repair Cost Waiver or an Economic Hardship Extension Calculation.	12/2/1998	7/1/2010, 75 FR 38023	Submitted on June 5, 2009. See 40 CFR 52.220(c)(372)(i)(A)(1).
3340.36	Clearing Enforcement Forms.	7/26/1996	7/1/2010, 75 FR 38023	Submitted on June 5, 2009. See 40 CFR 52.220(c)(372)(i)(A)(1).
3340.37	Installation of Oxides of Nitrogen (NO_X) Devices.	7/26/1996	7/1/2010, 75 FR 38023	Submitted on June 5, 2009. See 40 CFR 52.220(c)(372)(i)(A)(1).
3340.41	Inspection, Test, and Repair Requirements.	6/29/2006	7/1/2010, 75 FR 38023	Submitted on June 5, 2009. See 40 CFR 52.220(c)(372)(i)(A)(1).
3340.41.3	Invoice Requirements	4/16/1990	1/8/1997, 62 FR 1150	Submitted on January 22, 1996. See 40 CFR 52.220(c)(234)(i)(A)(1)(iv).
3340.41.5	Tampering with Emissions Control Systems.	12/7/1984	1/8/1997, 62 FR 1150	Submitted on January 22, 1996. See 40 CFR 52.220(c)(234)(i)(A)(1)(iv).
3340.42	Mandatory Smog Check Inspection and Test Procedures, and Emission Standards.	1/11/2008	7/1/2010, 75 FR 38023	Submitted on June 5, 2009. See 40 CFR 52.220(c)(372)(i)(A)(1).
3340.50	Fleet Facility Requirements.	2/15/2002	7/1/2010, 75 FR 38023	Submitted on June 5, 2009. See 40 CFR 52.220(c)(372)(i)(A)(1).
3340.50.1	Application for Fleet Facility License; Renewal; Replacement.	4/16/1990	1/8/1997, 62 FR 1150	Submitted on January 22, 1996. See 40 CFR 52.220(c)(234)(i)(A)(1)(iv).
3340.50.3	Fleet Records and Reporting Requirements.	6/23/1995	7/1/2010, 75 FR 38023	Submitted on June 5, 2009. See 40 CFR 52.220(c)(372)(i)(A)(1).

TABLE 1—EPA-APPROVED STATUTES AND STATE REGULATIONS [1]—Continued

State citation	Title/subject	State effective date	EPA approval date	Additional explanation
3340.50.4	Fleet Certificates	6/25/1998	7/1/2010, 75 FR 38023	Submitted on June 5, 2009. See 40 CFR 52.220(c)(372)(i)(A)(1).
3340.50.5	Suspension or Rescission of Fleet Facility License.	6/25/1998	7/1/2010, 75 FR 38023	Submitted on June 5, 2009. See 40 CFR 52.220(c)(372)(i)(A)(1).
Title 16 (Professional and Vocational Regulations), Division 33 (Bureau of Automotive Repair), Chapter 1 (Automotive Repair Dealers and Official Stations and Adjusters); Article 10 (Gold Shield Program)				
3392.1	Gold Shield Program (GSP).	5/28/2003	7/1/2010, 75 FR 38023	Submitted on June 5, 2009. See 40 CFR 52.220(c)(372)(i)(A)(1).
3392.2	Responsibilities of Smog Check Stations Certified as Gold Shield.	8/1/2007	7/1/2010, 75 FR 38023	Submitted on June 5, 2009. See 40 CFR 52.220(c)(372)(i)(A)(1).
3392.3	Eligibility for Gold Shield Certification; Quality Assurance.	5/28/2003	7/1/2010, 75 FR 38023	Submitted on June 5, 2009. See 40 CFR 52.220(c)(372)(i)(A)(1).
3392.4	Gold Shield Guaranteed Repair (GSGR) Program Advertising Rights.	5/28/2003	7/1/2010, 75 FR 38023	Submitted on June 5, 2009. See 40 CFR 52.220(c)(372)(i)(A)(1).
3392.5	Causes for Invalidation of Gold Shield Station Certification.	5/28/2003	7/1/2010, 75 FR 38023	Submitted on June 5, 2009. See 40 CFR 52.220(c)(372)(i)(A)(1).
3392.6	Gold Shield Program Hearing and Determination.	5/28/2003	7/1/2010, 75 FR 38023	Submitted on June 5, 2009. See 40 CFR 52.220(c)(372)(i)(A)(1).
Title 16 (Professional and Vocational Regulations), Division 33 (Bureau of Automotive Repair), Chapter 1 (Automotive Repair Dealers and Official Stations and Adjusters); Article 11 (Consumer Assistance Program)				
3394.1	Purpose and Components of the Consumer Assistance Program.	10/30/2000	7/1/2010, 75 FR 38023	Submitted on June 5, 2009. See 40 CFR 52.220(c)(372)(i)(A)(1).
3394.2	Consumer Assistance Program Administration.	10/30/2000	7/1/2010, 75 FR 38023	Submitted on June 5, 2009. See 40 CFR 52.220(c)(372)(i)(A)(1).
3394.3	State Assistance Limits.	10/30/2000	7/1/2010, 75 FR 38023	Submitted on June 5, 2009. See 40 CFR 52.220(c)(372)(i)(A)(1).
3394.4	Eligibility Requirements.	8/12/2008	7/1/2010, 75 FR 38023	Submitted on June 5, 2009. See 40 CFR 52.220(c)(372)(i)(A)(1).
3394.5	Ineligible Vehicles	10/30/2000	7/1/2010, 75 FR 38023	Submitted on June 5, 2009. See 40 CFR 52.220(c)(372)(i)(A)(1).
3394.6	Application and Documentation Requirements.	7/3/2006	7/1/2010, 75 FR 38023	Submitted on June 5, 2009. See 40 CFR 52.220(c)(372)(i)(A)(1).
Title 17 (Public Health), Division 3 (Air Resources), Chapter 1 (Air Resources Board); Subchapter 7.5 (Airborne Toxic Control Measures)				
93114	Airborne Toxic Control Measure to Reduce Particulate Emissions from Diesel-Fueled Engines—Standards for Nonvehicular Diesel Fuel.	8/14/2004	5/12/2010, 75 FR 26653	Submitted on February 3, 2009. See 40 CFR 52.220(c)(376)(i)(A)(2).
93116	Purpose	3/11/2005	81 FR 39424, 6/16/2016	Purpose is to reduce diesel particulate matter emissions from portable diesel-fueled engines having a rated brake horsepower of 50 and greater.

TABLE 1—EPA-APPROVED STATUTES AND STATE REGULATIONS [1]—Continued

State citation	Title/subject	State effective date	EPA approval date	Additional explanation
93116.1	Applicability	3/11/2005	81 FR 39424, 6/16/2016	Applies to all portable engines having a maximum rated horse horsepower of 50 bhp and greater and fueled with diesel unless exempted under (b).
93116.2	Definitions	3/11/2005	81 FR 39424, 6/16/2016	Defines specific terms used in the regulation.
93116.3, excluding (a)	Requirements	3/11/2005	81 FR 39424, 6/16/2016	Diesel PM standards for in-use portable diesel-fueled engines; different requirements apply to such engines not permitted or registered prior to January 1, 2006; fleet requirements (for subject engines operated in California), fleet average calculation provisions. Excluded subsection relates to fuel requirements.
93116.4	Fleet Recordkeeping and Reporting Requirements.	3/11/2005	81 FR 39424, 6/16/2016	Fleet recordkeeping and reporting requirements.
93116.5	Enforcement of Fleet Requirements.	3/11/2005	81 FR 39424, 6/16/2016	Authority to review and seek enforcement action for violation of the fleet emission standard.
93118.3	Airborne Toxic Control Measure for Auxiliary Diesel Engines Operated on Ocean-Going Vessels At-Berth in a California Port.	1/2/2009	81 FR 39424, 6/16/2016	Applicability, exemptions, definitions, vessel in-use operational requirements, calculation procedures for certain options, terminal plan requirements, reporting and recordkeeping requirements.
93118.5, excluding (e)(1).	Airborne Toxic Control Measure for Commercial Harbor Craft.	7/20/2011	83 FR 23232, 5/18/2018	Applicability, exemptions, definitions, engine emission requirements, alternative control provisions, recordkeeping and reporting requirements, test methods. Excluded subsection relates to the low sulfur fuel use requirement.
Title 17 (Public Health), Division 3 (Air Resources), Chapter 1 (Air Resources Board); Subchapter 8 (Compliance with Nonvehicular Emissions Standards)				
94000	Test Procedures for Vapor Recovery Systems—Service Stations.	10/29/1978	7/8/1982, 47 FR 29668	Submitted on April 23, 1980. See 40 CFR 52.220(c)(69)(iv).
94001	Certification of Vapor Recovery Systems—Service Stations.	10/29/1978	7/8/1982, 47 FR 29668	Submitted on April 23, 1980. See 40 CFR 52.220(c)(69)(iv).
94002	Certification of Vapor Recovery Systems—Gasoline Bulk Plants.	10/29/1978	7/8/1982, 47 FR 29668	Submitted on April 23, 1980. See 40 CFR 52.220(c)(69)(iv).
94003	Certification of Vapor Recovery Systems—Gasoline Terminals.	5/10/1977	7/8/1982, 47 FR 29668	Submitted on April 23, 1980. See 40 CFR 52.220(c)(69)(iv).
94004	Certification of Vapor Recovery Systems—Gasoline Delivery Tanks.	5/10/1977	7/8/1982, 47 FR 29668	Submitted on April 23, 1980. See 40 CFR 52.220(c)(69)(iv).
Title 17 (Public Health), Division 3 (Air Resources), Chapter 1 (Air Resources Board); Subchapter 8.5 (Consumer Products); Article 1 (Antiperspirants and Deodorants)				
94500	Applicability	5/30/1996	11/4/2009, 74 FR 57074	Submitted on March 27, 2008. See 40 CFR 52.220(c)(365)(i)(A)(1).

TABLE 1—EPA-APPROVED STATUTES AND STATE REGULATIONS [1]—Continued

State citation	Title/subject	State effective date	EPA approval date	Additional explanation
94501	Definitions	7/20/2005	11/4/2009, 74 FR 57074	Submitted on March 27, 2008. See 40 CFR 52.220(c)(365)(i)(A)(1).
94502	Standards for Anti-perspirants and Deodorants.	6/6/2001	11/4/2009, 74 FR 57074	Submitted on March 27, 2008. See 40 CFR 52.220(c)(365)(i)(A)(1).
94503	Exemptions	3/30/1996	11/4/2009, 74 FR 57074	Submitted on March 27, 2008. See 40 CFR 52.220(c)(365)(i)(A)(1).
94503.5	Innovative Products	3/30/1996	11/4/2009, 74 FR 57074	Submitted on March 27, 2008. See 40 CFR 52.220(c)(365)(i)(A)(1).
94504	Administrative Requirements.	6/6/2001	11/4/2009, 74 FR 57074	Submitted on March 27, 2008. See 40 CFR 52.220(c)(365)(i)(A)(1).
94505	Variances	3/30/1996	11/4/2009, 74 FR 57074	Submitted on March 27, 2008. See 40 CFR 52.220(c)(365)(i)(A)(1).
94506	Test Methods	7/20/2005	11/4/2009, 74 FR 57074	Submitted on March 27, 2008. See 40 CFR 52.220(c)(365)(i)(A)(1).
94506.5	Federal Enforceability	12/16/1999	11/4/2009, 74 FR 57074	Submitted on March 27, 2008. See 40 CFR 52.220(c)(365)(i)(A)(1).
Title 17 (Public Health), Division 3 (Air Resources), Chapter 1 (Air Resources Board); Subchapter 8.5 (Consumer Products); Article 2 (Consumer Products)				
94507	Applicability	11/19/2000	10/17/2014, 79 FR 62346	Submitted on May 28, 2014. See 40 CFR 52.220(c)(444)(i)(A)(1).
94508	Definitions	12/10/2011	10/17/2014, 79 FR 62346	Submitted on May 28, 2014. See 40 CFR 52.220(c)(444)(i)(A)(1).
94509	Standards for Consumer Products.	12/10/2011	10/17/2014, 79 FR 62346	Submitted on May 28, 2014. See 40 CFR 52.220(c)(444)(i)(A)(1).
94510	Exemptions	12/10/2011	10/17/2014, 79 FR 62346	Submitted on May 28, 2014. See 40 CFR 52.220(c)(444)(i)(A)(1).
94511	Innovative Products	10/20/2010	10/17/2014, 79 FR 62346	Submitted on May 28, 2014. See 40 CFR 52.220(c)(444)(i)(A)(1).
94512	Administrative Requirements.	12/10/2011	10/17/2014, 79 FR 62346	Submitted on May 28, 2014. See 40 CFR 52.220(c)(444)(i)(A)(1).
94513	Reporting Requirements.	10/20/2010	10/17/2014, 79 FR 62346	Submitted on May 28, 2014. See 40 CFR 52.220(c)(444)(i)(A)(1).
94514	Variances	12/8/2007	10/17/2014, 79 FR 62346	Submitted on May 28, 2014. See 40 CFR 52.220(c)(444)(i)(A)(1).
94515	Test Methods	12/10/2011	10/17/2014, 79 FR 62346	Submitted on May 28, 2014. See 40 CFR 52.220(c)(444)(i)(A)(1).
94516	Severability	10/21/1991	10/17/2014, 79 FR 62346	Submitted on May 28, 2014. See 40 CFR 52.220(c)(444)(i)(A)(1).
94517	Federal Enforceability	11/18/1997	10/17/2014, 79 FR 62346	Submitted on May 28, 2014. See 40 CFR 52.220(c)(444)(i)(A)(1).
Title 17 (Public Health), Division 3 (Air Resources), Chapter 1 (Air Resources Board); Subchapter 8.5 (Consumer Products); Article 3 (Aerosol Coating Products)				
94520	Applicability	1/8/1996	11/4/2009, 74 FR 57074	Submitted on March 27, 2008. See 40 CFR 52.220(c)(365)(i)(A)(3).
94521	Definitions	7/18/2001	11/4/2009, 74 FR 57074	Submitted on March 27, 2008. See 40 CFR 52.220(c)(365)(i)(A)(3).

TABLE 1—EPA-APPROVED STATUTES AND STATE REGULATIONS [1]—Continued

State citation	Title/subject	State effective date	EPA approval date	Additional explanation
94522	Limits and Requirements for Aerosol Coating Products.	7/18/2001	11/4/2009, 74 FR 57074	Submitted on March 27, 2008. See 40 CFR 52.220(c)(365)(i)(A)(3).
94523	Exemptions	12/8/2007	11/4/2009, 74 FR 57074	Submitted on March 27, 2008. See 40 CFR 52.220(c)(365)(i)(A)(3).
94524	Administrative Requirements.	7/18/2001	11/4/2009, 74 FR 57074	Submitted on March 27, 2008. See 40 CFR 52.220(c)(365)(i)(A)(3).
94525	Variances	1/8/1996	11/4/2009, 74 FR 57074	Submitted on March 27, 2008. See 40 CFR 52.220(c)(365)(i)(A)(3).
94526	Test Methods	7/20/2005	11/4/2009, 74 FR 57074	Submitted on March 27, 2008. See 40 CFR 52.220(c)(365)(i)(A)(3).
94527	Severability	1/8/1996	11/4/2009, 74 FR 57074	Submitted on March 27, 2008. See 40 CFR 52.220(c)(365)(i)(A)(3).
94528	Federal Enforceability	1/8/1996	11/4/2009, 74 FR 57074	Submitted on March 27, 2008. See 40 CFR 52.220(c)(365)(i)(A)(3).
Title 17 (Public Health), Division 3 (Air Resources), Chapter 1 (Air Resources Board); Subchapter 8.6 (Maximum Incremental Reactivity); Article 1 (Tables of Maximum Incremental Reactivity (MIR) Values)				
94700	MIR Values for Compounds.	7/18/2001	9/13/2005, 70 FR 53930	Submitted on March 13, 2002. See 40 CFR 52.220(c)(338)(i)(A)(1).
94701	MIR Values for Hydrocarbon Solvents.	7/18/2001	9/13/2005, 70 FR 53930	Submitted on March 13, 2002. See 40 CFR 52.220(c)(338)(i)(A)(1).

[1] Table 1 lists EPA-approved California statutes and regulations incorporated by reference in the applicable SIP. Table 2 of paragraph (c) lists approved California test procedures, test methods and specifications that are cited in certain regulations listed in Table 1. Approved California statutes that are nonregulatory or quasi-regulatory are listed in paragraph (e).

TABLE 2—EPA-APPROVED CALIFORNIA TEST PROCEDURES, TEST METHODS, AND SPECIFICATIONS

Title/subject	State effective date	EPA approval date	Additional explanation
Method 2–1: Test Procedures for Determining the Efficiency of Gasoline Vapor Recovery Systems at Service Stations.	9/1/1982	5/3/1984, 49 FR 18829	Submitted on January 20, 1983. See 40 CFR 52.220(c)(149)(i)(A).
Method 2–2: Certification Procedures for Gasoline Vapor Recovery Systems at Service Stations.	8/9/1978	7/8/1982, 47 FR 29668	Submitted on April 23, 1980. See 40 CFR 52.220(c)(69)(iv).
Method 2–3: Certification and Test Procedures for Vapor Recovery Systems at Gasoline Bulk Plants.	8/9/1978	7/8/1982, 47 FR 29668	Submitted on April 23, 1980. See 40 CFR 52.220(c)(69)(iv).
Method 2–4: Certification and Test Procedures for Vapor Recovery Systems at Gasoline Terminals.	4/18/1977	7/8/1982, 47 FR 29668	Submitted on April 23, 1980. See 40 CFR 52.220(c)(69)(iv).
Method 2–5: Certification and Test Procedures for Vapor Recovery Systems of Gasoline Delivery Tanks.	9/1/1982	5/3/1984, 49 FR 18829	Submitted on January 20, 1983. See 40 CFR 52.220(c)(149)(i)(A).
Test Procedures for Gasoline Vapor Leak Detection Using Combustible Gas Detector.	9/1/1982	5/3/1984, 49 FR 18829	Submitted on January 20, 1983. See 40 CFR 52.220(c)(149)(i)(A).
California Procedures for Evaluating Alternative Specifications for Phase 2 Reformulated Gasoline Using the California Predictive Model.	12/11/1998	5/12/2010, 75 FR 26653	Submitted on June 15, 2004. See 40 CFR 52.220(c)(374)(i)(A)(2).
California Procedures for Evaluating Alternative Specifications for Gasoline Using Vehicle Emissions Testing.	4/25/2001	5/12/2010, 75 FR 26653	Submitted on June 15, 2004. See 40 CFR 52.220(c)(374)(i)(A)(4).
California Procedures for Evaluating Alternative Specifications for Phase 3 Reformulated Gasoline Using the California Predictive Model.	8/7/2008	5/12/2010, 75 FR 26653	Submitted on June 15, 2004. See 40 CFR 52.220(c)(375)(i)(A)(2).

TABLE 2—EPA-APPROVED CALIFORNIA TEST PROCEDURES, TEST METHODS, AND SPECIFICATIONS—Continued

Title/subject	State effective date	EPA approval date	Additional explanation
Procedures for Using the California Model for California Reformulated Gasoline Blendstocks for Oxygenate Blending (CARBOB).	8/7/2008	5/12/2010, 75 FR 26653	Submitted on June 15, 2004. See 40 CFR 52.220(c)(375)(i)(A)(3).
California Exhaust Emission Standards and Test Procedures for 2001 and Subsequent Model Passenger Cars, Light-Duty Trucks and Medium-Duty Vehicles, as last amended September 5, 2003.	12/4/2003	81 FR 39424, 6/16/2016	Submitted by CARB on August 14, 2015.
California Motor Vehicle Emission Control and Smog Index Label Specifications for 1978 through 2003 Model Year Motorcycles, Light-, Medium- and Heavy-Duty Engines and Vehicles,'' as last amended September 5, 2003.	12/4/2003	81 FR 39424, 6/16/2016	Submitted by CARB on August 14, 2015.
California Smog Index Label Specifications for 2004 and Subsequent Model Passenger Cars and Light-Duty Trucks,'' adopted September 5, 2003.	12/4/2003	81 FR 39424, 6/16/2016	Submitted by CARB on August 14, 2015.
California Refueling Emission Standards and Test Procedures for 2001 and Subsequent Model Motor Vehicles, as last amended September 5, 2003.	12/4/2003	81 FR 39424, 6/16/2016	Submitted by CARB on August 14, 2015.
California Evaporative Emission Standards and Test Procedures for 2001 and Subsequent Model Motor Vehicles, as amended June 22, 2006.	2/17/2007	81 FR 39424, 6/16/2016	Submitted by CARB on August 14, 2015.
California Refueling Emission Standards and Test Procedures for 2001 and Subsequent Model Motor Vehicles, as last amended June 22, 2006.	2/17/2007	81 FR 39424, 6/16/2016	Submitted by CARB on August 14, 2015.
California Exhaust Emission Standards Test Procedures for 2001 and Subsequent Model Passenger Cars, Light-Duty Trucks, and Medium-Duty Vehicles, as last amended June 22, 2006.	2/17/2007	81 FR 39424, 6/16/2016	Submitted by CARB on August 14, 2015.
California Exhaust Emission Standards and Test Procedures for 2004 and Subsequent Model Heavy-Duty Diesel Engines and Vehicles, as last amended March 22, 2012.	8/7/2012	81 FR 39424, 6/16/2016	Submitted by CARB on August 14, 2015.
California Exhaust Emission Standards and Test Procedures for 2004 and Subsequent Model Heavy-Duty Otto-Cycle Engines, as last amended March 22, 2012.	8/7/2012	81 FR 39424, 6/16/2016	Submitted by CARB on August 14, 2015.
California Non-Methane Organic Gas Test Procedures, as last amended March 22, 2012.	8/7/2012	81 FR 39424, 6/16/2016	Submitted by CARB on August 14, 2015.
California 2001 through 2014 Model Criteria Pollutant Exhaust Emission Standards and Test Procedures and 2009 through 2016 Model Greenhouse Gas Exhaust Emission Standards and Test Procedures for Passenger Cars, Light-Duty Trucks, and Medium-Duty Vehicles, as last amended March 22, 2012, excluding GHG-related provisions.	8/7/2012	81 FR 39424, 6/16/2016	Submitted by CARB on August 14, 2015.
California Environmental Performance Label Specifications for 2009 and Subsequent Model Year Passenger Cars, Light-Duty Trucks, and Medium-Duty Passenger Vehicles, as last amended March 22, 2012.	8/7/2012	81 FR 39424, 6/16/2016	Submitted by CARB on August 14, 2015.
California Evaporative Emission Standards and Test Procedures for 2001 and Subsequent Model Motor Vehicles, as last amended March 22, 2012.	8/7/2012	81 FR 39424, 6/16/2016	Submitted by CARB on August 14, 2015.
California Refueling Emission Standards and Test Procedures for 2001 and Subsequent Model Motor Vehicles, as last amended March 22, 2012.	8/7/2012	81 FR 39424, 6/16/2016	Submitted by CARB on August 14, 2015.

TABLE 2—EPA-APPROVED CALIFORNIA TEST PROCEDURES, TEST METHODS, AND SPECIFICATIONS—Continued

Title/subject	State effective date	EPA approval date	Additional explanation
Specifications for Fill Pipes and Openings of 1977 through 2014 Model Motor Vehicle Fuel Tanks, as last amended March 22, 2012.	8/7/2012	81 FR 39424, 6/16/2016	Submitted by CARB on August 14, 2015.
Specifications for Fill Pipes and Openings of 2015 and Subsequent Model Motor Vehicle Fuel Tanks, adopted March 22, 2012.	8/7/2012	81 FR 39424, 6/16/2016	Submitted by CARB on August 14, 2015.
California 2015 and Subsequent Model Criteria Pollutant Exhaust Emission Standards and Test Procedures and 2017 and Subsequent Model Greenhouse Gas Exhaust Emission Standards and Test Procedures for Passenger Cars, Light-Duty Trucks, and Medium-Duty Vehicles, adopted March 22, 2012, excluding GHG-related provisions.	8/7/2012	81 FR 39424, 6/16/2016	Submitted by CARB on August 14, 2015.
California Exhaust Emission Standards and Test Procedures for 2009 through 2017 Model Zero-Emission Vehicles and Hybrid Electric Vehicles, in the Passenger Car, Light-Duty Truck, and Medium-Duty Vehicle Classes, as last amended March 22, 2012, excluding GHG-related provisions.	8/7/2012	81 FR 39424, 6/16/2016	Submitted by CARB on August 14, 2015.
California Exhaust Emission Standards and Test Procedures for 2018 and Subsequent Model Zero-Emission Vehicles and Hybrid Electric Vehicles, in the Passenger Car, Light-Duty Truck, and Medium-Duty Vehicle Classes, adopted March 22, 2012, excluding GHG-related provisions.	8/7/2012	81 FR 39424, 6/16/2016	Submitted by CARB on August 14, 2015.
California 2015 and Subsequent Model Criteria Pollutant Exhaust Emission Standards and Test Procedures and 2017 and Subsequent Model Greenhouse Gas Exhaust Emission Standards and Test Procedures for Passenger Cars, Light-Duty Trucks, and Medium-Duty Vehicles, as last amended December 6, 2012, excluding GHG-related provisions.	12/31/2012	81 FR 39424, 6/16/2016	Submitted by CARB on August 14, 2015.
California 2001 through 2014 Model Criteria Pollutant Exhaust Emission Standards and Test Procedures and 2009 through 2016 Model Greenhouse Gas Exhaust Emission standards and Test Procedures for Passenger Cars, Light-Duty Trucks, and Medium-Duty Vehicles, as last amended December 6, 2012, excluding GHG-related provisions.	12/31/2012	81 FR 39424, 6/16/2016	Submitted by CARB on August 14, 2015.
California Non-Methane Organic Gas Test Procedures, as last amended December 6, 2012.	12/31/2012	81 FR 39424, 6/16/2016	Submitted by CARB on August 14, 2015.
California Evaporative Emission Standards and Test Procedures for 2001 and Subsequent Model Motor Vehicles, as last amended December 6, 2012.	12/31/2012	81 FR 39424, 6/16/2016	Submitted by CARB on August 14, 2015.
California Exhaust Emission Standards and Test Procedures for 2004 and Subsequent Model Heavy-Duty Otto-Cycle Engines, as last amended December 6, 2012.	12/31/2012	81 FR 39424, 6/16/2016	Submitted by CARB on August 14, 2015.
California Exhaust Emission Standards and Test Procedures for 2004 and Subsequent Model Heavy-Duty Diesel Engines and Vehicles, as last amended December 6, 2012.	12/31/2012	81 FR 39424, 6/16/2016	Submitted by CARB on August 14, 2015.
California Exhaust Emission Standards and Test Procedures for 2009 through 2017 Model Zero-Emission Vehicles and Hybrid Electric Vehicles, in the Passenger Car, Light-Duty Truck, and Medium-Duty Vehicle Classes, as last amended December 6, 2012.	12/31/2012	81 FR 39424, 6/16/2016	Submitted by CARB on August 14, 2015.

TABLE 2—EPA-APPROVED CALIFORNIA TEST PROCEDURES, TEST METHODS, AND SPECIFICATIONS—Continued

Title/subject	State effective date	EPA approval date	Additional explanation
California Exhaust Emission Standards and Test Procedures for 2018 and Subsequent Model Zero-Emission Vehicles and Hybrid Vehicles, in the Passenger Car, Light-Duty Truck, and Medium-Duty Vehicle Classes, adopted December 6, 2012, excluding GHG-related provisions.	12/31/2012	81 FR 39424, 6/16/2016	Submitted by CARB on August 14, 2015.
California Exhaust Emission Standards and Test Procedures for 2004 and Subsequent Model Heavy-Duty Otto-cycle Engines, as last amended December 12, 2002.	12/4/2003	81 FR 39424, 6/16/2016	Submitted by CARB on August 14, 2015.
California Exhaust Emission Standards and Test Procedures for 1985 and Subsequent Model Heavy-Duty Diesel Engines and Vehicles, as last amended October 25, 2001.	11/17/2002	81 FR 39424, 6/16/2016	Submitted by CARB on August 14, 2015.
California Motor Vehicle Emission Control and Smog Index Label Specifications, as last amended October 22, 1999.	11/22/1999	81 FR 39424, 6/16/2016	Submitted by CARB on August 14, 2015.
California Exhaust Emission Standards and Test Procedures for 2004 and Subsequent Model Heavy-Duty Diesel Engines, as last amended September 1, 2006.	11/15/2006	81 FR 39424, 6/16/2016	Submitted by CARB on August 14, 2015.
California Exhaust Emission Standards and Test Procedures for 2004 and Subsequent Model Heavy-Duty Diesel Engines and Vehicles, as last amended October 12, 2011.	12/22/2011	83 FR 23232, 5/18/2018	Submitted by CARB on June 15, 2017.
California Exhaust Emission Standards and Test Procedures for New 2001 through 2006 Off-Road Large Spark-Ignition Engines, Parts I and II, adopted September 1, 1999 and as last amended March 2, 2007.	5/12/2007	81 FR 39424, 6/16/2016	Submitted by CARB on August 14, 2015.
California Exhaust and Evaporative Emission Standards and Test Procedures for 2007 through 2009 Off-Road Large Spark-Ignition Engines, (2007–2009 Test Procedure 1048), adopted March 2, 2007.	5/12/2007	81 FR 39424, 6/16/2016	Submitted by CARB on August 14, 2015.
California Exhaust and Evaporative Emission Standards and Test Procedures for New 2010 and Later Off-Road Large Spark-Ignition Engines, (2010 and Later Test Procedure 1048), adopted March 2, 2007.	5/12/2007	81 FR 39424, 6/16/2016	Submitted by CARB on August 14, 2015.
California Exhaust and Evaporative Emission Standards and Test Procedures for New 2010 and Later Off-Road Large Spark-Ignition Engines, (2010 and Later Test Procedure 1048), amended November 21, 2008.	10/20/2009	82 FR 14446, 3/21/2017	Submitted by CARB on December 7, 2016.
California Exhaust and Evaporative Emission Standards and Test Procedures for New 2010 and Later Off-Road Large Spark-Ignition Engines, (2010 and Later Test Procedure 1048), amended October 25, 2012.	1/10/2013	82 FR 14446, 3/21/2017	Submitted by CARB on December 7, 2016.
California Exhaust and Evaporative Emission Standards and Test Procedures for New 2007 and Later Off-Road Large Spark-Ignition Engines (Test Procedures 1065 and 1068), adopted March 2, 2007.	5/12/2007	81 FR 39424, 6/16/2016	Submitted by CARB on August 14, 2015.
California Exhaust and Evaporative Emission Standards and Test Procedures for New 2007 and Later Off-Road Large Spark-Ignition Engines (Test Procedures 1065 and 1068), amended October 25, 2012.	1/10/2013	82 FR 14446, 3/21/2017	Submitted by CARB on December 7, 2016.
Small Off-Road Engine and Equipment Evaporative Emissions Test Procedure (TP–901), adopted July 26, 2004.	10/20/2004	82 FR 14446, 3/21/2017	Submitted by CARB on December 7, 2016.
Small Off-Road Engine and Equipment Evaporative Emissions Test Procedure (TP–902), adopted July 26, 2004.	10/20/2004	82 FR 14446, 3/21/2017	Submitted by CARB on December 7, 2016.

TABLE 2—EPA-APPROVED CALIFORNIA TEST PROCEDURES, TEST METHODS, AND SPECIFICATIONS—Continued

Title/subject	State effective date	EPA approval date	Additional explanation
Small Off-Road Engine Evaporative Emission Control System Certification Procedure (CP–901), adopted July 26, 2004.	10/20/2004	82 FR 14446, 3/21/2017	Submitted by CARB on December 7, 2016.
Small Off-Road Engine Evaporative Emission Control System Certification Procedure (CP–902), adopted July 26, 2004.	10/20/2004	82 FR 14446, 3/21/2017	Submitted by CARB on December 7, 2016.
California Exhaust Emission Standards and Test Procedures for 2005 and Later Small Off-Road Engines, as last amended February 24, 2010.	5/5/2010	81 FR 39424, 6/16/2016	Submitted by CARB on August 14, 2015.
California Exhaust Emission Standards and Test Procedures for 2005 and Later Small Off-Road Engines, as last amended October 25, 2012.	1/10/2013	82 FR 14446, 3/21/2017	Submitted by CARB on December 7, 2016.
California Exhaust Emission Standards and Test Procedures for New 2013 and Later Small Off-Road Engines, Engine-Testing Procedures (Part 1054), adopted October 25, 2012.	1/10/2013	82 FR 14446, 3/21/2017	Submitted by CARB on December 7, 2016.
California Exhaust Emission Standards and Test Procedures for New 2013 and Later Small Off-Road Engines, Engine-Testing Procedures (Part 1065), adopted October 25, 2012.	1/10/2013	82 FR 14446, 3/21/2017	Submitted by CARB on December 7, 2016.
California Exhaust Emission Standards and Test Procedures for New 2000 and Later Tier 1, Tier 2, and Tier 3 Off-Road Compression-Ignition Engines, Part I–B, adopted January 28, 2000 and as last amended October 20, 2005.	1/6/2006	81 FR 39424, 6/16/2016	Submitted by CARB on August 14, 2015.
California Exhaust Emission Standards and Test Procedures for New 1996 and Later Tier 1, Tier 2, and Tier 3 Off-Road Compression-Ignition Engines, Part II, adopted May 12, 1993 and as last amended October 20, 2005.	1/6/2006	81 FR 39424, 6/16/2016	Submitted by CARB on August 14, 2015.
California Exhaust Emission Standards and Test Procedures for New 2008 and Later Tier 4 Off-Road Compression-Ignition Engines, Part I–C, adopted October 20, 2005.	1/6/2006	81 FR 39424, 6/16/2016	Submitted by CARB on August 14, 2015.
California Exhaust Emission Standards and Test Procedures for New 2008–2010 Tier 4 Off-Road Compression-Ignition Engines, Part I–C, as last amended October 25, 2012.	1/10/2013	82 FR 14446, 3/21/2017	Submitted by CARB on December 7, 2016.
California Exhaust Emission Standards and Test Procedures for New 2011 and Later Tier 4 Off-Road Compression-Ignition Engines, Part I–D, as last amended October 25, 2012 (excluding optional alternative NO_X + NMHC standards and associated family emission limits in § 1039.102(e).	1/10/2013	82 FR 14446, 3/21/2017	Submitted by CARB on December 7, 2016.
California Exhaust Emission Standards and Test Procedures for New 2011 and Later Tier 4 Off-Road Compression-Ignition Engines, Part I–F, as last amended October 25, 2012.	1/10/2013	82 FR 14446, 3/21/2017	Submitted by CARB on December 7, 2016.
California Exhaust Emission Standards and Test Procedures for New 2011 and Later Tier 4 Off-Road Compression-Ignition Engines, Part I–E, adopted October 25, 2012.	1/10/2013	82 FR 14446, 3/21/2017	Submitted by CARB on December 7, 2016.
California Exhaust Emission Standards and Test Procedures for 2001 Model Year and Later Spark-Ignition Marine Engines, as last amended June 5, 2009.	8/16/2009	81 FR 39424, 6/16/2016	Submitted by CARB on August 14, 2015.
California Exhaust Emission Standards and Test Procedures for 2001 Model Year and Later Spark-Ignition Marine Engines, as last amended October 25, 2012.	1/10/2013	82 FR 14446, 3/21/2017	Submitted by CARB on December 7, 2016.

TABLE 2—EPA-APPROVED CALIFORNIA TEST PROCEDURES, TEST METHODS, AND SPECIFICATIONS—Continued

Title/subject	State effective date	EPA approval date	Additional explanation
Procedures for Exemption of Add-On and Modified Parts for Off-Road Categories, as last amended June 5, 2009.	8/16/2009	81 FR 39424, 6/16/2016	Submitted by CARB on August 14, 2015.
California Exhaust Emissions Standards and Test Procedures for 1997 and Later Off-Highway Recreational Vehicles, and Engines, as last amended August 15, 2007.	8/15/2007	81 FR 39424, 6/16/2016	Submitted by CARB on August 14, 2015.
California Exhaust Emissions Standards and Test Procedures for 1997 and Later Off-Highway Recreational Vehicles and Engines, as last amended October 25, 2012.	1/10/2013	82 FR 14446, 3/21/2017	Submitted by CARB on December 7, 2016.
Test Procedures for Determining Evaporative Emissions from Off-Highway Recreational Vehicles (TP–933), adopted November 5, 2014.	4/1/2015	83 FR 23232, 5/18/2018	Submitted by CARB on June 15, 2017.

TABLE 3—EPA-APPROVED AMADOR COUNTY AIR DISTRICT REGULATIONS

District citation	Title/subject	State effective date	EPA approval date	Additional explanation
[Reserved]				

TABLE 4—EPA-APPROVED ANTELOPE VALLEY AIR DISTRICT REGULATIONS; LOS ANGELES COUNTY AIR DISTRICT REGULATIONS

District citation	Title/subject	State effective date	EPA approval date	Additional explanation
[Reserved]				

TABLE 5—EPA-APPROVED BAY AREA AIR DISTRICT REGULATIONS

District citation	Title/subject	State effective date	EPA approval date	Additional explanation
[Reserved]				

TABLE 6—EPA-APPROVED BUTTE COUNTY AIR DISTRICT REGULATIONS

District citation	Title/subject	State effective date	EPA approval date	Additional explanation
[Reserved]				

TABLE 7—EPA-APPROVED CALAVERAS COUNTY AIR DISTRICT REGULATIONS

District citation	Title/subject	State effective date	EPA approval date	Additional explanation
[Reserved]				

TABLE 8—EPA-APPROVED COACHELLA VALLEY PLANNING AREA ORDINANCES

District citation	Title/subject	State effective date	EPA approval date	Additional explanation
[Reserved]				

TABLE 9—EPA-APPROVED COLUSA COUNTY AIR DISTRICT REGULATIONS

District citation	Title/subject	State effective date	EPA approval date	Additional explanation
[Reserved]				

TABLE 10—EPA-APPROVED EASTERN KERN COUNTY AIR DISTRICT REGULATIONS; KERN COUNTY AIR DISTRICT REGULATIONS

District citation	Title/subject	State effective date	EPA approval date	Additional explanation
[Reserved]				

TABLE 11—EPA-APPROVED EL DORADO COUNTY AIR DISTRICT REGULATIONS

District citation	Title/subject	State effective date	EPA approval date	Additional explanation
[Reserved]				

TABLE 12—EPA-APPROVED FEATHER RIVER AIR DISTRICT REGULATIONS; SUTTER COUNTY AIR DISTRICT REGULATIONS; YUBA COUNTY AIR DISTRICT REGULATIONS

District citation	Title/subject	State effective date	EPA approval date	Additional explanation
[Reserved]				

TABLE 13—EPA-APPROVED GLENN COUNTY AIR DISTRICT REGULATIONS

District citation	Title/subject	State effective date	EPA approval date	Additional explanation
[Reserved]				

TABLE 14—EPA-APPROVED GREAT BASIN UNIFIED AIR DISTRICT REGULATIONS

District citation	Title/subject	State effective date	EPA approval date	Additional explanation
[Reserved]				

TABLE 15—EPA-APPROVED IMPERIAL COUNTY AIR DISTRICT REGULATIONS

District citation	Title/subject	State effective date	EPA approval date	Additional explanation
[Reserved]				

TABLE 16—EPA-APPROVED LAKE COUNTY AIR DISTRICT REGULATIONS

District citation	Title/subject	State effective date	EPA approval date	Additional explanation
[Reserved]				

TABLE 17—EPA-APPROVED LASSEN COUNTY AIR DISTRICT REGULATIONS

District citation	Title/subject	State effective date	EPA approval date	Additional explanation
[Reserved]				

TABLE 18—EPA-APPROVED MARIPOSA COUNTY AIR DISTRICT REGULATIONS

District citation	Title/subject	State effective date	EPA approval date	Additional explanation
[Reserved]				

TABLE 19—EPA-APPROVED MENDOCINO COUNTY AIR DISTRICT REGULATIONS

District citation	Title/subject	State effective date	EPA approval date	Additional explanation
[Reserved]				

TABLE 20—EPA-APPROVED MODOC COUNTY AIR DISTRICT REGULATIONS

District citation	Title/subject	State effective date	EPA approval date	Additional explanation
[Reserved]				

TABLE 21—EPA-APPROVED MOJAVE DESERT AIR DISTRICT REGULATIONS; RIVERSIDE COUNTY AIR DISTRICT REGULATIONS; SAN BERNARDINO COUNTY AIR DISTRICT REGULATIONS

District citation	Title/subject	State effective date	EPA approval date	Additional explanation
[Reserved]				

TABLE 22—EPA-APPROVED MONTEREY BAY UNIFIED AIR DISTRICT REGULATIONS

District citation	Title/subject	State effective date	EPA approval date	Additional explanation
[Reserved]				

TABLE 23—EPA-APPROVED NORTH COAST UNIFIED AIR DISTRICT REGULATIONS

District citation	Title/subject	State effective date	EPA approval date	Additional explanation
[Reserved]				

TABLE 24—EPA-APPROVED NORTHERN SIERRA AIR DISTRICT REGULATIONS; NEVADA COUNTY AIR DISTRICT REGULATIONS; PLUMAS COUNTY AIR DISTRICT REGULATIONS; SIERRA COUNTY AIR DISTRICT REGULATIONS

District citation	Title/subject	State effective date	EPA approval date	Additional explanation
[Reserved]				

TABLE 25—EPA-APPROVED NORTHERN SONOMA COUNTY AIR DISTRICT REGULATIONS

District citation	Title/subject	State effective date	EPA approval date	Additional explanation
[Reserved]				

TABLE 26—EPA-APPROVED PLACER COUNTY AIR DISTRICT REGULATIONS

District citation	Title/subject	State effective date	EPA approval date	Additional explanation
[Reserved]				

TABLE 27—EPA-APPROVED SACRAMENTO METROPOLITAN AIR DISTRICT REGULATIONS

District citation	Title/subject	State effective date	EPA approval date	Additional explanation
[Reserved]				

TABLE 28—EPA-APPROVED SAN DIEGO COUNTY AIR DISTRICT REGULATIONS

District citation	Title/subject	State effective date	EPA approval date	Additional explanation
[Reserved]				

TABLE 29—EPA-APPROVED SAN JOAQUIN VALLEY UNIFIED AIR DISTRICT REGULATIONS; FRESNO COUNTY AIR DISTRICT REGULATIONS; KERN COUNTY AIR DISTRICT REGULATIONS; KINGS COUNTY AIR DISTRICT REGULATIONS; MADERA COUNTY AIR DISTRICT REGULATIONS; MERCED COUNTY AIR DISTRICT REGULATIONS; SAN JOAQUIN COUNTY AIR DISTRICT REGULATIONS; STANISLAUS COUNTY AIR DISTRICT REGULATIONS; TULARE COUNTY AIR DISTRICT REGULATIONS

District citation	Title/subject	State effective date	EPA approval date	Additional explanation
[Reserved]				

TABLE 30—EPA-APPROVED SAN LUIS OBISPO COUNTY AIR DISTRICT REGULATIONS

District citation	Title/subject	State effective date	EPA approval date	Additional explanation
[Reserved]				

TABLE 31—EPA-APPROVED SANTA BARBARA COUNTY AIR DISTRICT REGULATIONS

District citation	Title/subject	State effective date	EPA approval date	Additional explanation
[Reserved]				

TABLE 32—EPA-APPROVED SHASTA COUNTY AIR DISTRICT REGULATIONS

District citation	Title/subject	State effective date	EPA approval date	Additional explanation
[Reserved]				

TABLE 33—EPA-APPROVED SISKIYOU COUNTY AIR DISTRICT REGULATIONS

District citation	Title/subject	State effective date	EPA approval date	Additional explanation
[Reserved]				

TABLE 34—EPA-APPROVED SOUTH COAST AIR DISTRICT REGULATIONS; LOS ANGELES COUNTY AIR DISTRICT REGULATIONS; ORANGE COUNTY AIR DISTRICT REGULATIONS; RIVERSIDE COUNTY AIR DISTRICT REGULATIONS; SAN BERNARDINO COUNTY AIR DISTRICT REGULATIONS

District citation	Title/subject	State effective date	EPA approval date	Additional explanation
[Reserved]				

TABLE 35—EPA-APPROVED TEHAMA COUNTY AIR DISTRICT REGULATIONS

District citation	Title/subject	State effective date	EPA approval date	Additional explanation
[Reserved]				

TABLE 36—EPA-APPROVED TUOLUMNE COUNTY AIR DISTRICT REGULATIONS

District citation	Title/subject	State effective date	EPA approval date	Additional explanation
[Reserved]				

TABLE 37—EPA-APPROVED TUOLUMNE COUNTY AIR DISTRICT REGULATIONS

District citation	Title/subject	State effective date	EPA approval date	Additional explanation
[Reserved]				

TABLE 38—EPA-APPROVED VENTURA COUNTY AIR DISTRICT REGULATIONS

District citation	Title/subject	State effective date	EPA approval date	Additional explanation
[Reserved]				

TABLE 39—EPA-APPROVED YOLO-SOLANO AIR DISTRICT REGULATIONS

District citation	Title/subject	State effective date	EPA approval date	Additional explanation
[Reserved]				

(d) *EPA-approved source-specific requirements.* [Reserved]

(e) *EPA-approved California nonregulatory provisions and quasi-regulatory measures.* [Reserved]

[81 FR 33400, May 26, 2016, as amended at 81 FR 39432, June 16, 2016; 81 FR 64352, Sept. 20, 2016; 82 FR 14453, Mar. 21, 2017; 82 FR 61179, Dec. 27, 2017; 83 FR 23235, May 18, 2018]

§ 52.221 Classification of regions.

The California plan was evaluated on the basis of the following classifications:

Air quality control region	Pollutant				
	Particulate matter	Sulfur oxides	Nitrogen dioxide	Carbon monoxide	Photochemical oxidants (hydrocarbons)
Great Basin Valley Intrastate	I	III	III	III	III
Lake County Intrastate	II	III	III	III	III
Lake Tahoe Intrastate	II	III	III	I	III
Metropolitan Los Angeles Intrastate	I	III	III	I	I
Mountain Counties Intrastate	II	III	III	I	I
North Central Coast Intrastate	II	III	III	III	III
North Coast Intrastate	II	III	III	III	III
Northeast Plateau Intrastate	III	III	III	III	III
Sacramento Valley Intrastate	II	III	III	I	I
San Diego Intrastate	II	III	III	I	I
San Francisco Bay Area Intrastate	II	III	III	I	I
San Joaquin Valley Intrastate	II	III	III	I	I
South Central Coast Intrastate	III	III	III	III	III
Southeast Desert Intrastate	I	III	III	III	I

[81 FR 18778, Apr. 1, 2016]

§ 52.222 Negative declarations.

(a) The following air pollution control districts submitted negative declarations for volatile organic compound source categories to satisfy the requirements of section 182 of the Clean Air Act, as amended. The following negative declarations are approved as additional information to the State Implementation Plan.

(1) Mojave Desert Air Quality Management District.

(i) Natural Gas and Gasoline Processing Equipment and Chemical Processing and Manufacturing were submitted on July 13, 1994 and adopted on May 25, 1994.

(ii) Asphalt Air Blowing was submitted on December 20, 1994 and adopted on October 26, 1994.

(iii) Vacuum Producing Devices or Systems was submitted on December 29, 1994 and adopted on December 21, 1994.

(iv) Synthetic Organic Chemical Manufacturing Industry (SOCMI) Distillation, SOCMI Reactors, SOCMI Batch Processing, Offset Lithography, Industrial Wastewater, Plastic Parts Coating (Business Machines), Plastic Parts (Other), and Ship Building were submitted on August 7, 1995 and adopted on June 28, 1995.

(v) Pneumatic Rubber Tire Manufacturing, Large Petroleum Dry Cleaners,

Surface Coating of Cans, Surface Coating of Coils, Surface Coating Fabrics, Surface Coating Operations at Automotive and Light Duty Truck Assembly Plants, Surface of Coating of Large Appliances, Surface of Coating of Magnet Wire, Vacuum Producing Devices or Systems, Leaks From Petroleum Refinery Equipment, Process Unit Turnarounds, Equipment Leaks From Natural Gas/Gasoline Processing Plants, Synthesized Pharmaceutical Products, Air Oxidation Process—SOCMI, Polymer Manufacturing SOCMI and Polymer Manufacturing Equipment Leaks, Reactor Processes and Distillation Operations in SOCMI, and Synthetic Organic Chemical Polymer and Resin Manufacturing were submitted on July 11, 2007 and adopted January 22, 2007.

(vi) Petroleum Refinery Equipment, Manufacture of High-Density Polyethylene, Polypropylene, and Polystyrene Resins, and Fugitive Emissions from Synthetic Organic Chemical Polymer and Resin Manufacturing Equipment were submitted on October 22, 2010 and adopted on August 23, 2010.

(vii) The following negative declarations for the 2008 ozone NAAQS were adopted by the District on February 23, 2015 and submitted to EPA on September 9, 2015.

CTG source category	CTG reference document
Large Petroleum Dry Cleaners	EPA 450/3–82–009, 9/82 Control of VOC Emissions from Large Petroleum Dry Cleaners.
Manufacture of High-Density Polyethylene, Polypropylene, and Polystyrene Resins.	EPA–450/3–83–008, 11/83 Control of Volatile Organic Compound Emissions from Manufacture of High-Density Polyethylene, Polypropylene, and Polystyrene Resins.
Manufacture of Pneumatic Rubber Tires	EPA–450/2–78–030, 12/78 Control of Volatile Organic Emissions from Manufacture of Pneumatic Rubber Tires.
Surface Coating of Cans	EPA–450/2–77–008, 5/77 Control of Volatile Organic Emissions from Existing Stationary Sources—Vol. II: Surface Coating of Cans, Coils, Paper, Fabrics, Automobiles, and Light-Duty Trucks.
Surface Coating of Coils	EPA–450/2–77–008, 5/77 Control of Volatile Organic Emissions from Existing Stationary Sources—Vol. II: Surface Coating of Cans, Coils, Paper, Fabrics, Automobiles, and Light-Duty Trucks.
Surface Coating Operations at Automotive and Light Duty Truck Assembly Plants.	EPA 453/R–08–006, 09/08 Control Technique Guidelines for Automobile and Light-Duty Truck Assembly Coatings. EPA–450/2–77–008, 5/77 Control of Volatile Organic Emissions from Existing Stationary Sources—Vol. II: Surface Coating of Cans, Coils, Paper, Fabrics, Automobiles, and Light-Duty Trucks.
Large Appliances, Surface Coatings	EPA–450/2–77–034, 12/77 Control of Volatile Organic Emissions from Existing Stationary Sources—Volume V: Surface Coating of Large Appliances. EPA 453/R–07–004, 09/07 Control Techniques Guidelines for Large Appliance Coatings.
Surface Coating of Magnet Wire	EPA–450/2–77–033, 12/77 Control of Volatile Organic Emissions from Existing Stationary Sources, Volume IV: Surface Coating of Insulation of Magnet Wire.
Vacuum Producing Devices or Systems	EPA–450/2–77–025, 10/77 Control of Refinery Vacuum Producing Systems, Wastewater Separators, and Process Unit Turnarounds.
Leaks from Petroleum Refinery Equipment	EPA–450/2–77–025, 10/77 Control of Refinery Vacuum Producing Systems, Wastewater Separators, and Process Unit Turnarounds.
Process Unit Turnarounds	EPA–450/2–77–025, 10/77 Control of Refinery Vacuum Producing Systems, Wastewater Separators, and Process Unit Turnarounds.
Equipment Leaks from Natural Gas/Gasoline Processing Plants.	EPA–450/3–83–007,12/83 Control of Volatile Organic Compound Equipment Leaks from Natural Gas/Gasoline Processing Plants.
Manufacture of Synthesized Pharmaceutical Products.	EPA–450/2–78–029, 12/78 Control of Volatile Organic Emissions from Manufacture of Synthesized Pharmaceutical Products.
Air Oxidation Processes (SOCMI)	EPA–450/3–84–015, 12/84 Control of Volatile Organic Compound Emissions from Air Oxidation Process in Synthetic Organic Chemical Manufacturing Industry (SOCMI).
Reactor and Distillation Processes (SOCMI).	EPA–450/4–91–031, 08/93 Control of Volatile Organic Compound Emissions from Reactor Process and Distillation Operations in SOCMI.
Equipment used in Synthetic Organic Chemical Polymers and Resin Manufacturing.	EPA–450/3–83–006, 03/84 Control of Volatile Organic Compound Leaks from Synthetic Organic Chemical Polymer and Resin Manufacturing Equipment.
Leaks from Petroleum Refinery Equipment	EPA–450/2–78–036, 06/78 Control of Volatile Organic Compound Leaks from Petroleum Refinery Equipment.
Metal Furniture Coating	EPA–450/2–77–032, 12/77 Control of Volatile Organic Emissions from Existing Stationary Sources—Volume III: Surface Coating of Metal Furniture. EPA 453/R–07–005, 09/07 Control Techniques Guidelines for Metal Furniture Coatings.

CTG source category	CTG reference document
Flat Wood Paneling	EPA–450/2–78–032, 06/78 Control of Volatile Organic Emissions from Existing Stationary Sources—Volume VII: Factory Surface Coating of Flat Wood Paneling. EPA–453/R–06–004, 09/06 Control Techniques Guidelines for Flat Wood Paneling Coatings.

(2) Sacramento Metropolitan Air Quality Management District.

(i) Plastic Parts Coating: Business Machines and Plastic Parts Coating: Other were submitted on June 6, 1996 and adopted on May 2, 1996.

(ii) Coating Operations at Aerospace Manufacturing and Rework Operations was submitted on January 12, 2012 and adopted on October 27, 2011.

(iii) Fiberglass and Boat Manufacturing Materials and Automobile and Light-Duty Truck Assembly Coatings were submitted on July 12, 2012 and adopted on March 22, 2012.

(iv) *Negative declarations for Sacramento Metropolitan Air Quality Management District.*

CTG Source category	Negative declaration—CTG reference document	Submitted 7/11/07, adopted 10/26/06	Updated submitted 1/21/09, adopted 10/23/08
Aerospace Coating	EPA–453/R–97–004 and 59 FR 29216 (6/06/94)—Control of Volatile Organic Compound Emissions from Coating Operations at Aerospace Manufacturing and Rework Operations.		X
Automobile Coating	EPA–450/2–77–008—Control of Volatile Organic Emissions from Existing Stationary Sources, Volume II: Surface Coating of Cans, Coils, Paper, Fabrics, Automobiles, and Light-Duty Trucks.	X	
Dry Cleaning (Petroleum Solvent).	EPA–450/3–82–009—Control of Volatile Organic Compound Emissions from Large Petroleum Dry Cleaners.	X	
Graphic Arts (Rotogravure)	EPA–450/2–78–033—Control of Volatile Organic Emissions from Existing Stationary Sources, Volume VIII: Graphic Arts–Rotogravure and Flexography.		X
Large Appliance Coating	EPA–450/2–77–034—Control of Volatile Organic Emissions from Existing Stationary Sources, Volume V: Surface Coating of Large Appliances.	X	
Large Appliance Coating	EPA–453/R–07–004—Control Techniques Guidelines for Large Appliance Coatings.		X
Magnetic Wire Coating	EPA–450/2–77–033—Control of Volatile Organic Emissions from Existing Stationary Sources, Volume IV: Surface Coating for Insulation of Magnetic Wire.	X	
Metal Coil Coating	EPA–450/2–77–008—Control of Volatile Organic Emissions from Existing Stationary Sources, Volume II: Surface Coating of Cans, Coils, Paper, Fabrics, Automobiles, and Light-Duty Trucks.	X	
Natural Gas/Gasoline Processing.	EPA–450/2–83–007—Control of Volatile Organic Compound Equipment Leaks from Natural Gas/Gasoline Processing Plants.	X	
Paper and Fabric Coating	EPA–450/2–77–008—Control of Volatile Organic Emissions from Existing Stationary Sources, Volume II: Surface Coating of Cans, Coils, Paper, Fabrics, Automobiles, and Light-Duty Trucks.	X	
Resin Manufacturing (High-Density Polyethylene, Polypropylene, and Polystyrene).	EPA–450/3–83–008—Control of Volatile Organic Compound Emissions from Manufacture of High-Density Polyethylene, Polypropylene, and Polystyrene Resins.	X	
Refineries	EPA–450/2–77–025—Control of Refinery Vacuum Producing Systems, Wastewater Separators and Process Unit Turnarounds.	X	
	EPA–450/2–78–036—Control of Volatile Organic Compound Leaks from Petroleum Refinery Equipment.	X	
Rubber Tire Manufacturing	EPA–450/2–78–030—Control of Volatile Organic Emissions from Manufacture of Pneumatic Rubber Tires.	X	
Ship Coating	61 FR 44050—Control Techniques Guidelines for Shipbuilding and Ship Repair Operations (Surface Coating).	X	

CTG Source category	Negative declaration—CTG reference document	Submitted 7/11/07, adopted 10/26/06	Updated submitted 1/21/09, adopted 10/23/08
Wood Coating (Flat Wood Paneling).	EPA–450/2–78–032—Control of Volatile Organic Emissions from Existing Stationary Sources, Volume VII: Factory Surface Coating of Flat Wood Paneling.	X	
Flat Wood Paneling Coatings	EPA–453/R06–004—Control Techniques Guidelines for Flat Wood Paneling Coatings.	.....	X
Paper, Film and Foil	EPA–453/R–07–004—Control Techniques Guidelines for Paper, Film, and Foil Coatings.	.....	X

(3) Santa Barbara County Air Pollution Control District.

(i) Industrial Wastewater, Plastic Parts Coating: Business Machines, Plastic Parts Coating: Other, Industrial Cleaning Solvents, Offset Lithography, and Shipbuilding Coatings were submitted on July 12, 1996 and adopted on May 16, 1996.

(ii) Synthetic Organic Chemical Manufacturing Industry (SOCMI) Batch Processing, SOCMI Reactors, and SOCMI Distillation; and Wood Furniture Manufacturing Operations were submitted on April 9, 2002 and adopted on February 21, 2002.

(4) Placer County Air Pollution Control District.

(i) Aerospace Coatings; Industrial Waste Water Treatment; Plastic Parts Coating: Business Machines; Plastic Parts Coating: Other; Shipbuilding and Repair; Synthetic Organic Chemical Manufacturing, Batch Plants; and Synthetic Organic Chemical Manufacturing, Reactors were submitted on February 25, 1998 and adopted on October 7, 1997.

(ii)

CTG source category	Negative declaration—CTG reference document
Aerospace	EPA–453/R–97–004—Control of VOC Emissions from Coating Operations at Aerospace Manufacturing and Rework Operations.
Automobile and Light-duty Truck Assembly Coatings.	EPA–450/2–77–008—Control of Volatile Organic Emissions from Existing Stationary Sources—Volume II: Surface Coating of Cans, Coils, Paper, Fabrics, Automobiles, and Light-Duty Trucks.
	EPA 450/R–08–006—Control Techniques Guidelines for Automobile and Light-duty Truck Assembly Coatings.
Dry Cleaning (Petroleum)	EPA–450/3–82–009—Control of Volatile Organic Compound Emissions from Large Petroleum Dry Cleaners.
Fiberglass Boat Manufacturing	EPA 453/R–08–004—Control Techniques Guidelines for Fiberglass Boat Manufacturing Materials.
Flexible Package Printing	EPA–453/R–06–003—Control Techniques Guidelines for Flexible Package Printing.
Large Appliances Surface Coatings.	EPA–450/2–77–034—Control of Volatile Organic Emissions from Existing Stationary Sources, Volume V: Surface Coating of Large Appliances.
	EPA 453/R–07–004—Control Techniques Guidelines for Large Appliance Coatings.
Magnetic Wire	EPA–450/2–77–033—Control of Volatile Organic Emissions from Existing Stationary Sources, Volume IV: Surface Coating of Insulation of Magnetic Wire.
Metal Furniture Coatings	EPA–450/2–77–032—Control of Volatile Organic Emissions from Existing Stationary Sources, Volume III: Surface Coating of Metal Furniture.
	EPA 453/R–07–005—Control Techniques Guidelines for Metal Furniture Coatings.
Natural Gas/Gasoline	EPA–450/2–83–007—Control of VOC Equipment Leaks from Natural Gas/Gasoline Processing Plants.
Paper and Fabric	EPA–450/2–77–008—Control of Volatile Organic Emissions from Existing Stationary Sources—Volume II: Surface Coating of Cans, Coils, Paper, Fabrics, Automobiles, and Light-Duty Trucks.
Paper, Film, and Foil Coatings	EPA 453/R–07–003—Control Techniques Guidelines for Paper, Film, and Foil Coatings.
Pharmaceutical Products	EPA–450/2–78–029—Control of Volatile Organic Emissions from Manufacture of Synthesized Pharmaceutical Products.
Refineries	EPA–450/2–77–025—Control of Refinery Vacuum Producing Systems, Wastewater Separators, and Process Unit Turnarounds.
	EPA–450/2–78–036—Control of VOC Leaks from Petroleum Refinery Equipment.
Rubber Tires	EPA–450/2–78–030—Control of Volatile Organic Emissions from Manufacture of Pneumatic Rubber Tires.
Ships/Marine Coating	EPA–453/R–94–032 Alternative Control Technology Document—Surface Coating Operations at Shipbuilding and Ship Repair Facilities and Ships 61 FR 44050 Shipbuilding and Ship Repair Operations (Surface Coating).
Synthetic Organic Chemical	EPA–450/3–84–015—Control of VOC Emissions from Air Oxidation Processes in Synthetic Organic Chemical Manufacturing Industry.

CTG source category	Negative declaration—CTG reference document
	EPA–450/4–91–031—Control of VOC Emissions from Reactor Processes and Distillation Operations in SOCMI.

(iii) Submitted on April 14, 2014 and adopted on February 13, 2014.

(iv) Polyester Resin was submitted on July 18, 2014 and adopted on April 10, 2014.

(5) San Diego County Air Pollution Control District.

(i) Synthetic organic chemical manufacturing (distillation), synthetic organic chemical manufacturing (reactors), wood furniture, plastic parts coatings (business machines), plastic parts coatings (other), offset lithography, industrial wastewater, autobody refinishing, and volatile organic liquid storage were submitted on February 25, 1998 and adopted on October 22, 1997.

(6) Antelope Valley Air Pollution Control District.

(i) Motor Vehicle Assembly Line Coating Operations submitted on January 12, 1999 and adopted on November 18, 1997.

(ii) Refinery Process Turnarounds submitted on February 16, 1999 and adopted on November 18, 1997.

(iii) Marine Vessel Coating Operations, Marine Tank Vessel Operations, and Thermal Enhanced Oil Recovery Wells submitted on June 23, 1998 and adopted on January 20, 1998.

(iv) Pharmaceuticals and Cosmetic Manufacturing Operations submitted on March 28, 2000 and adopted on January 18, 2000.

(v) Metal Container, Closure and Coil Coating Operations and Magnet Wire Coating Operations submitted on June 3, 2004 and adopted on February 17, 2004.

(vi) Control of Volatile Compound Emissions from Resin Manufacturing and Surfactant Manufacturing submitted on July 19, 2004 and adopted on March 16, 2004.

(vii) Large Appliances, Surface Coating; Wood Furniture Surface Coating; Gasoline Bulk Plants, Equipment Leaks from Natural Gas/Gasoline Processing Plants; Leaks from Petroleum Refinery Equipment; Air Oxidation Processes (SOCMI); Reactor and Distillation Processes (SOCMI); Tank Truck Gasoline Loading Terminals >76,000 L; Manufacture of Synthesized Pharmaceutical Products; Manufacture of Pneumatic Rubber Tires; Manufacture of High Density Polyethylene, Polypropylene and Polystyrene; Equipment Used in Synthetic Organic Chemical Polymers and Resin Manufacturing; Refinery Vacuum-Producing Systems, Wastewater Separators and Process Unit Turnarounds; and Magnetic Wire Coating Operations submitted on January 31, 2007 and adopted on September 19, 2006.

(viii) Ship Repair Operations; Storage of Petroleum Liquids in Fixed Roof Tanks; and Petroleum Liquid Storage in External Floating Roof Tanks submitted on January 7, 2011 and adopted on October 19, 2010.

(ix) Petroleum Coke Calcining Operations—Oxides of Sulfur submitted on June 20, 2011 and adopted on January 18, 2011.

(x) The following negative declarations for the 2008 ozone NAAQS were adopted by the District on July 21, 2015 and submitted to EPA on October 23, 2015.

CTG source category	CTG reference document
Bulk Gasoline Plants	Control of Volatile Organic Emissions from Bulk Gasoline Plants (EPA–450/2–77–035, 12/1977).
Coils	Control of Volatile Organic Emissions from Existing Stationary Sources—Volume II: Surface Coating of Cans, Coils, Paper, Fabrics, Automobiles, and Light-Duty Trucks (EPA–450/2–77–008, 05/1977).
Fiberglass Boat Manufacturing Materials.	Control Techniques Guidelines for Fiberglass Boat Manufacturing Materials (EPA–453/R–08–004, 09/2008).
Fixed-Roof Tanks	Control Volatile Organic Emissions from Storage of Petroleum Liquids in Fixed-Roof Tanks (EPA–450/2–77–036, 12/1977).
Flat Wood Paneling	Control Techniques Guidelines for Flat Wood Paneling Coatings (EPA–453/R–06–004, 09/2006).

CTG source category	CTG reference document
Floating-Roof Tanks	Control of Volatile Organic Emissions from Petroleum Liquid Storage in External Floating Roof Tanks (EPA–450/2–78–047, 12/1978).
Insulation of Magnet Wire	Control of Volatile Organic Emissions from Existing Stationary Sources—Volume IV: Surface Coating of Insulation of Magnet Wire (EPA–450/2–77–033, 12/1977).
Large Appliance Coatings	Control of Volatile Organic Emissions from Existing Stationary Sources—Volume V: Surface Coating of Large Appliances (EPA–450/2–77–034, 12/1977). Control Techniques Guidelines for Large Appliance Coatings (EPA–453/R–07–004, 09/2007).
Large Petroleum Dry Cleaners	Control of Volatile Organic Compound Emissions from Large Petroleum Dry Cleaners (EPA–450/3–82–009, 09/1982).
Manufacture of High-Density Polyethylene, Polypropylene, and Polystyrene Resins.	Control of Volatile Organic Compound Emissions from Manufacture of High-Density Polyethylene, Polypropylene, and Polystyrene Resins (EPA–450/3–83–008, 11/1983).
Metal Furniture Coating	Control Techniques Guidelines for Metal Furniture Coatings (EPA–453/R–07–005, 09/2007).
Natural Gas/Gasoline Processing Plants.	Control of Volatile Organic Compound Leaks from Natural Gas/Gasoline Processing Plants (EPA–450/3–83–007, 12/1983).
Petroleum Refinery Equipment	Control of Volatile Organic Compound Leaks from Petroleum Refinery Equipment (EPA–450/2–78–036, 06/1978).
Pneumatic Rubber Tires	Control of Volatile Organic Emissions from Manufacture of Pneumatic Rubber Tires (EPA–450/2–78–030, 12/1978).
Refinery Vacuum Producing Systems, Wastewater Separators, and Process Unit Turnarounds.	Control of Refinery Vacuum Producing Systems, Wastewater Separators, and Process Unit Turnarounds (EPA–450/2–77–025, 10/1977).
Shipbuilding and Ship Repair Surface Coating Operations.	Control Techniques Guidelines for Shipbuilding and Ship Repair Operations (Surface Coating) (61 FR 44050, 08/27/96) and EPA–453/R–94–032, 04/1994.
Synthesized Pharmaceutical Products.	Control of Volatile Organic Emissions from Manufacture of Synthesized Pharmaceutical Products (EPA–450/2–78–029, 12/1978).
Synthetic Organic Chemical Manufacturing Industry.	Control Volatile Organic Compound Emissions from Air Oxidation Processes in Synthetic Organic Chemical Manufacturing Industry (EPA–450/3–84–015, 12/1984). Control of Volatile Organic Compound Emissions from Reactor Processes and Distillation Operations in Synthetic Organic Chemical Manufacturing Industry (EPA–450/4–91–031, 08/1993).
Synthetic Organic Chemical Polymer and Resin Manufacturing Equipment.	Control of Volatile Organic Compound Leaks from Synthetic Organic Chemical Polymer and Resin Manufacturing Equipment (EPA–450/3–83–006, 03/1984).
Wood Furniture Manufacturing Coating Operations.	Control of Volatile Organic Compound Emissions from Wood Furniture Manufacturing Operations (EPA–453/R–96–007, 04/1996).

(xi) The following negative declarations were adopted by the District on December 20, 2016 and submitted to EPA on June 7, 2017.

NEGATIVE DECLARATIONS FOR THE 1997 OZONE NAAQS

CTG source category	CTG reference document
Can Coating	Control of Volatile Organic Emissions from Existing Stationary Sources—Volume II: Surface Coating of Cans, Coils, Paper, Fabrics, Automobiles, and Light-Duty Trucks (EPA–450/2–77–008, 05/1977).
Flat Wood Paneling Coating	Control of Volatile Organic Emissions from Existing Stationary Sources—Volume VII: Factory Surface Coating of Flat Wood Paneling (EPA–450/2–78–032, 06/1978).
Large Petroleum Dry Cleaning	Control of Volatile Organic Compound Emissions from Large Petroleum Dry Cleaners (EPA–450/3–82–009, 09/1982).

NEGATIVE DECLARATIONS FOR THE 2008 OZONE NAAQS

CTG source category	CTG reference document
Can Coating	Control of Volatile Organic Emissions from Existing Stationary Sources—Volume II: Surface Coating of Cans, Coils, Paper, Fabrics, Automobiles, and Light-Duty Trucks (EPA–450/2–77–008, 05/1977).
Drum Coating	Control Techniques Guidelines for Miscellaneous Metal and Plastic Parts Coatings (EPA–453/R–08–003, 09/2008).
Flat Wood Paneling Coating	Control of Volatile Organic Emissions from Existing Stationary Sources—Volume VII: Factory Surface Coating of Flat Wood Paneling (EPA–450/2–78–032, 06/1978).
Metal Furniture Coating	Control of Volatile Organic Emissions from Existing Stationary Sources—Volume III: Surface Coating of Metal Furniture (EPA–450/2–77–032, 12/1977).
Pleasure Craft Coating	Control Techniques Guidelines for Miscellaneous Metal and Plastic Parts Coatings (EPA–453/R–08–003, 09/2008).

NEGATIVE DECLARATIONS FOR THE 2008 OZONE NAAQS—Continued

CTG source category	CTG reference document
Tank Truck Gasoline Loading Terminals.	Control of Hydrocarbons from Tank Truck Gasoline Loading Terminals (EPA–450/2–77–026, 10/1977).

(7) El Dorado County Air Pollution Control District.

(i) Bulk Terminal Facilities or External or Internal Floating Roof Tank Sources was submitted on May 23, 2001 and adopted on April 3, 2001.

(ii) Control of VOC Emissions from Existing Stationary Sources, Volume VI: Surface Coating of Miscellaneous Metal Parts and Products; Control of VOC Emissions from Solvent Metal Cleaning; and Control of VOC Emissions from Existing Stationary Sources, Volume VIII: Graphic Arts—Rotogravure and Flexography submitted on September 30, 2013 and adopted on December 11, 2012.

(iii) Control of VOC Emissions from Coating Operations at Aerospace Manufacturing and Rework; Control of Volatile Organic Emissions from Existing Stationary Sources—Volume II: Surface Coating of Cans, Coils, Paper, Fabrics, Automobiles, and Light-Duty Trucks; Control of Volatile Organic Emissions from Existing Stationary Sources, Volume V: Surface Coating of Large Appliances; Control of Volatile Organic Emissions from Existing Stationary Sources, Volume IV: Surface Coating of Insulation of Magnet Wire; Control of Volatile Organic Emissions from Existing Stationary Sources, Volume III: Surface Coating of Metal Furniture; 61 FR 44050 Shipbuilding and Ship Repair Operations (Surface Coating); Control of Volatile Organic emissions from Existing Stationary Sources, Volume VII: Factory Surface Coating of Flat Wood Paneling; Control of VOC Emissions from Wood Furniture Manufacturing Operations; Control of VOC Equipment Leaks from Natural Gas/Gasoline Processing Plants; Control of Refinery Vacuum Producing Systems, Wastewater Separators, and Process Unit Turnarounds; Control of VOC Leaks from Petroleum Refinery Equipment; Control of VOC Emissions from Air Oxidation Processes in Synthetic Organic Chemical Manufacturing Industry; Control of VOC Emissions from Reactor Processes and Distillation Operations in SOCMI; Control of VOC Emissions from Storage of Petroleum Liquids in Fixed Roof Tanks; Control of VOC Emissions from Petroleum Liquid Storage in External Floating Roof Tanks; Control of VOC Emissions from Large Petroleum Dry Cleaners; Control of Volatile Organic Emissions from Manufacture of Synthesized Pharmaceutical Products; Control of VOC Emissions from Manufacture of High-Density Polyethylene, Polypropylene, and Polystyrene Resins; Control of VOC Fugitive Emissions from Synthetic Organic Chemical Polymer and Resin Manufacturing Equipment; and Control of Volatile Organic Emissions from Manufacture of Pneumatic Rubber Tires were submitted on July 11, 2007 and adopted on February 6, 2007.

(8) San Joaquin Valley Unified Air Pollution Control District.

(i) Synthesized Pharmaceutical Products Manufacturing and Coating Operations at Shipbuilding/Ship Repair Facilities submitted on June 18, 2009 and adopted on April 16, 2009.

(ii) Rubber Tire Manufacturing submitted on June 20, 2011 and adopted on September 20, 2010.

(9) Northern Sierra Air Quality Management District.

(i) Flexible Package Printing, Flat Wood Paneling Coatings, Paper, Film, and Foil Coatings, Large Appliance Coatings, Metal Furniture Coatings, Industrial Cleaning Solvents, and Offset Lithographic Printing and Letterpress Printing were submitted on August 14, 2008 and adopted on May 19, 2008.

(ii) Fiberglass Boat Manufacturing Materials, Miscellaneous Industrial Adhesives, and Automobile and Light-Duty Truck Assembly Coatings were submitted on May 17, 2011 and adopted on April 25, 2011.

(iii) EPA–453/R–97–004 Aerospace CTG and MACT; EPA–450/2–77–008 Control of

Volatile Organic Emissions from Existing Stationary Sources—Volume II: Surface Coating of Cans, Coils, Paper, Fabrics, Automobiles, and Light-Duty Trucks; EPA–450/2–78–032, Control of Volatile Organic Emissions from Existing Stationary Sources—Volume VII: Factory Surface Coating of Flat Wood Paneling; EPA–450/2–77–026, Control of Hydrocarbons from Tank Truck Gasoline Loading Terminals; EPA–450/2–78–033, Control of Volatile Organic Emissions from Existing Stationary Sources—Volume III: Graphic Arts—Rotogravure and Flexography; EPA–450/2–77–034 Control of Volatile Organic Emissions from Existing Stationary Sources—Volume V: Surface Coating of Large Appliances; EPA–450/3–82–009, Control of Volatile Organic Compound Emissions from Large Petroleum Dry Cleaners; EPA–450/2–77–033 Control of Volatile Organic Emissions from Existing Stationary Sources—Volume IV: Surface Coating of Insulation of Magnet Wire; EPA–450/2–77–032 Control of Volatile Organic Emissions from Existing Stationary Sources—Volume III: Surface Coating of Metal Furniture; EPA–450–83–007, Control of Volatile Organic Compound Equipment Leaks from Natural Gas/Gasoline Processing Plants; EPA–450/2–78–047, Control of Volatile Organic Compound Emissions from Petroleum Liquid Storage in External Floating Roof Tanks; EPA–450/2–77–025 Control of Refinery Vacuum Producing Systems, Wastewater Separators, and Process Unit Turnarounds; EPA–450/2–78–036 Control of Volatile Organic Compound Leaks from Petroleum Refinery Equipment; EPA–450/2–78–029 Control of Volatile Organic Emissions from Manufacture of Synthesized Pharmaceutical Products; EPA–450/2–78–030 Control of Volatile Organic Emissions from Manufacture of Pneumatic Rubber Tires; EPA–450/3–83–008 Control of Volatile Organic Compound Emissions from Manufacture of High-Density Polyethylene, Polypropylene, and Polystyrene Resins; EPA–450/3–83–006 Control of Volatile Organic Compound Leaks from Synthetic Organic Chemical Polymer and Resin Manufacturing Equipment; EPA–450/3–94–032, Shipbuilding/Repair; EPA–450/2–77–022, Control of Volatile Organic Emissions from Solvent Metal Cleaning; EPA–450/3–84–015 Control of Volatile Organic Compound Emissions from Air Oxidation Processes in Synthetic Organic Chemical Manufacturing Industry; EPA–450/4–91–031 Control of Volatile Organic Compound Emissions from Reactor Processes and Distillation Operations in Synthetic Organic Chemical Manufacturing Industry; EPA–453/R–96–007, Wood Furniture.

(10) Ventura County Air Pollution Control District.

(i) EPA–453/R06–004 Control Techniques Guidelines for Flat Wood Paneling Coatings; EPA–453/R–07–004 Control Techniques Guidelines for Large Appliance Coatings; EPA–453/R–07–003 Control Techniques Guidelines for Paper, Film, and Foil Coatings; EPA–452/R–08–006 Control Techniques Guidelines for Automobile and Light-Duty Truck Assembly Coatings; EPA 453/R–08–005 Control Techniques Guidelines for Miscellaneous Industrial Adhesives; EPA 453/R–06–003 Control Techniques Guidelines for Flexible Package Printing; EPA 453/R–07–005 Control Techniques Guidelines for Metal Furniture Coatings; and EPA 453/R–08–004 Control Techniques Guidelines for Fiberglass Boat Manufacturing Materials were submitted on November 17, 2009 and adopted on September 15, 2009.

(ii) Negative declarations for the 2008 8-hour ozone standard: EPA–453/R–97–004 Aerospace CTG and MACT; EPA–450/2–77–008 Control of Volatile Organic Emissions from Existing Stationary Sources—Volume II: Surface Coating of Cans, Coils, Paper, Fabrics, Automobiles, and Light-Duty Trucks; EPA 453/R–08–006 Control Techniques Guidelines for Automobile and Light-Duty Truck Assembly Coatings; EPA–450/2–78–032, Control of Volatile Organic Emissions from Existing Stationary Sources—Volume VII: Factory Surface Coating of Flat Wood Paneling; EPA–453/R–06–004, Control Techniques Guidelines for Flat Wood Paneling Coatings; EPA–453/R–06–003 Control Techniques Guidelines for Flexible Package Printing; EPA–450/2–77–034 Control of Volatile Organic Emissions from Existing Stationary Sources—Volume V: Surface Coating of Large Appliances; EPA 453/R–07–004 Control Techniques Guidelines for Large Appliance Coatings; EPA–450/2–77–033 Control of Volatile

Organic Emissions from Existing Stationary Sources—Volume IV: Surface Coating of Insulation of Magnet Wire; EPA–450/2–77–032 Control of Volatile Organic Emissions from Existing Stationary Sources—Volume III: Surface Coating of Metal Furniture; EPA 453/R–07–005 Control Techniques Guidelines for Metal Furniture Coatings; EPA 453/R–07–003 Control Techniques Guidelines for Paper, Film, and Foil Coatings; EPA–450/2–77–025 Control of Refinery Vacuum Producing Systems, Wastewater Separators, and Process Unit Turnarounds; EPA–450/2–78–036 Control of Volatile Organic Compound Leaks from Petroleum Refinery Equipment; EPA 453/R–08–004 Control Techniques Guidelines for Fiberglass Boat Manufacturing Materials; EPA 453/R–08–005 Control Techniques Guidelines for Miscellaneous Industrial Adhesives; EPA–450/2–78–029 Control of Volatile Organic Emissions from Manufacture of Synthesized Pharmaceutical Products; EPA–450/2–78–030 Control of Volatile Organic Emissions from Manufacture of Pneumatic Rubber Tires; EPA–450/3–83–008 Control of Volatile Organic Compound Emissions from Manufacture of High-Density Polyethylene, Polypropylene, and Polystyrene Resins; EPA–450/3–83–006 Control of Volatile Organic Compound Leaks from Synthetic Organic Chemical Polymer and Resin Manufacturing Equipment; EPA–450/3–84–015 Control of Volatile Organic Compound Emissions from Air Oxidation Processes in Synthetic Organic Chemical Manufacturing Industry; EPA–450/4–91–031 Control of Volatile Organic Compound Emissions from Reactor Processes and Distillation Operations in Synthetic Organic Chemical Manufacturing Industry; EPA–450/3–82–009 Control of Volatile Organic Compound Emissions from Large Petroleum Dry Cleaners were submitted on July 18, 2014 and adopted on June 10, 2014.

(11) Feather River Air Quality Management District.

CTG source category	Negative declaration CTG reference document	2006 RACT SIP submitted 7/11/07	2009 RACT SIP submitted 10/27/09	2014 RACT SIP submitted 9/29/14
Aerospace	EPA–453/R–97–004—Control of VOC Emissions from Coating Operations at Aerospace Manufacturing and Rework.	X	.....	X
Automobile Coating; Metal Coil Container, & Closure; Paper & Fabric.	EPA–450/2–77–008—Control of Volatile Organic Emissions from Existing Stationary Sources—Volume II Surface Coating of Cans, Coils, Paper, Fabrics, Automobiles, and Light-Duty Trucks.	X	.....	X
Automobile and Light-Duty Truck Assembly Coatings.	EPA–453/R–08–006—Control Techniques Guidelines for Automobile and Light-Duty Assembly Coatings.	.....	X	X
Cutback Asphalt	EPA–450/2–77–037—Control of Volatile Organic Emissions from Use of Cutback Asphalt.	X	.....	X
Dry Cleaning	EPA–450/3–82–009—Control of Volatile Organic Compound Emissions from Large Petroleum Dry Cleaners.	X	.....	X
Flat Wood Paneling Coatings	EPA–453/R–06–004—Control Techniques Guidelines for Flat Wood Paneling Coatings.	.....	X	X
Fiberglass Boat Manufacturing Materials.	EPA–453/R–08–004—Control Techniques Guidelines for Fiberglass Boat Manufacturing Materials.	.....	X	X
Flexible Package Printing	EPA–453/R06–003—Control Techniques Guidelines for Flexible Package Printing.	.....	X	X
Gasoline Loading Terminal	EPA–450/2–77–026—Control of Hydrocarbons from Tank Truck Gasoline Loading Terminals.	X	.....	X
Gasoline Trucks	EPA–450/2–78–051—Control of Volatile Organic Compound Leaks from Gasoline Tank Trucks and Vapor Collection Systems.	X	.....	X
Gasoline Bulk Plants	EPA–450/2–77–035—Control of Volatile Organic Emissions from Gasoline Bulk Plants.	X	.....	X
Graphic Arts Rotogravure and Flexography.	EPA–450/2–78–033—Control of Volatile Organic Emissions from Existing Stationary Sources—Volume VIII: Rotogravure and Flexography.	X	.....	X
Industrial Cleaning Solvents	EPA–453/R–06–001—Control Techniques Guidelines for Industrial Cleaning Solvents.	X	X	X
Large Appliance Coating	EPA–450/2–77–034—Control of Volatile Organic Emissions from Existing Stationary Sources, Volume V: Surface Coating of Large Appliances.	X	.....	X
Large Appliance Coating	EPA–453/R–07–004—Control Techniques for Large Appliance Coatings.	.....	X	X

CTG source category	Negative declaration CTG reference document	2006 RACT SIP submitted 7/11/07	2009 RACT SIP submitted 10/27/09	2014 RACT SIP submitted 9/29/14
Magnet Wire Coating	EPA–450/2–77–033—Control of Volatile Organic Emissions from Existing Stationary Sources—Volume IV: Surface Coating of Insulation of Magnet Wire.	X	.....	X
Metal Can Coating; Metal Coil Coating.	EPA–450/2–77–008—Control of Volatile Organic Emissions from Existing Stationary Sources—Volume II: Surface Coating of Cans, Coils, Paper, Fabrics, Automobiles, and Light-Duty Trucks.	X	.....	X
Metal Furniture	EPA–450/2–77–032—Control of Volatile Organic Emissions from Existing Stationary Sources—Volume III: Surface Coating of Metal Furniture.	X	.....	X
Metal Furniture Coatings	EPA–453/R–07–005—Control Techniques Guidelines for Metal Furniture Coatings.	.....	X	X
Metal Parts and Products	EPA–450/2–78–015—Control of Volatile Organic Emissions from Existing Stationary Sources—Volume VI: Surface Coating of Miscellaneous Parts and Products.	X	.....	X
Miscellaneous Industrial Adhesives.	EPA–453/R–08–005—Control Techniques Guidelines for Miscellaneous Industrial Adhesives.	X	X	X
Miscellaneous Metal and Plastic Parts Coatings.	EPA–453/R–08–003—Control Techniques Guidelines for Miscellaneous Metal and Plastic Parts Coatings.	.....	X	X
Natural Gas/Gasoline	EPA–450/2–83–007—Control of VOC Equipment Leaks from Natural Gas/Gasoline Processing Plants.	X	.....	X
Offset Lithographic Printing and Letterpress Printing.	EPA–453/R–06–002—Control Techniques Guidelines for Offset Lithographic Printing and Letterpress Printing.	.....	X	X
Paper and Fabric Coating	EPA–450/2–77–008—Control of Volatile Organic Emissions from Existing Stationary Sources—Volume II: Surface Coating of Cans, Coils, Paper, Fabrics, Automobiles, and Light-Duty Trucks.	X	.....	X
Paper, Film, and Foil Coatings.	EPA–453/R–07–003—Control Techniques Guidelines for Paper, Film, and Foil Coatings.	.....	X	X
Petroleum Liquid Storage Tanks.	EPA–450/2–77–036—Control of VOC Emissions from Storage of Petroleum Liquids in Fixed Roof Tanks.	X	.....	X
Petroleum Liquid Storage Tanks.	EPA–450/2–78–047—Control of VOC Emissions from Petroleum Liquid Storage in External Floating Roof Tanks.	X	.....	X
Pharmaceutical Products	EPA–450/2–78–029—Control of Volatile Organic Emissions from Manufacture of Synthesized Pharmaceutical Products.	X	.....	X
Resin Manufacturing	EPA–450/3–83–008—Control of VOC Emissions from Manufacture of High-Density Polyethylene, Polypropylene, and Polystyrene Resins.	X	.....	X
Resin Manufacturing	EPA–450/3–83–006—Control of VOC Fugitive Emissions from Synthetic Organic Chemical Polymer and Resin Manufacturing Equipment.	X	.....	X
Refineries	EPA–450/2–77–025—Control of Refinery Vacuum Producing Systems, Wastewater Separators, and Process Unit Turnarounds.	X	.....	X
Refineries	EPA–450/2–78–036—Control of VOC Leaks from Petroleum Refinery Equipment.	X	.....	X
Rubber Tire Manufacturing	EPA–450/2–78–030—Control of Volatile Organic Emissions from Manufacture of Pneumatic Rubber Tires.	X	.....	X
Ship Coatings	61 FR 44050 Shipbuilding and Ship Repair Operations (Surface Coating).	X	.....	X
Ship Coatings	EPA–453/R–94–032—Alternative Control Technology Document—Surface Coating Operations at Shipbuilding and Ship Repair Operations (Surface Coating).	.....	.....	X
Solvent Cleaning Degreasers	EPA–450/2–77–022—Control of Volatile Organic Emissions from Solvent Metal Cleaning.	X	.....	X
Synthetic Organic Chemical Manufacturing.	EPA–450/3–84–015—Control of VOC Emissions from Air Oxidation Processes in Synthetic Organic Chemical Manufacturing Industry.	X	.....	X
Synthetic Organic Chemical Manufacturing.	EPA–450/4–91–031—Control of VOC Emissions from Reactor Processes and Distillation Operations in Synthetic Organic Chemical Manufacturing Industry.	X	.....	X
Wood Coating Factory Surface of Flat Wood Paneling.	EPA–450/2–78–032—Control of Volatile Organic Emissions from Existing Stationary Sources—Volume VII: Factory Surface of Flat Wood Paneling.	X	.....	X
Wood Furniture Coating	EPA–453/R–96–007—Control of VOC Emissions from Wood Furniture Manufacturing Operations.	X	.....	X

(12) Imperial County Air Pollution Control District.

(i)

CTG Source category	Negative declaration CTG reference document
Aerospace	EPA–453/R–97–004, Aerospace CTG and MACT.
Automobile and Light-duty Trucks, Surface Coating of	EPA–450/2–77–008, Control of Volatile Organic Emissions from Existing Stationary Sources—Volume II: Surface Coating of Cans, Coils, Paper, Fabrics, Automobiles, and Light-Duty Trucks. EPA–453/R–08–006, Control Techniques Guidelines for Automobile and Light-Duty Truck Assembly Coatings.
Cans and Coils, Surface Coating of	EPA–450/2–77–008, Control of Volatile Organic Emissions from Existing Stationary Sources—Volume II: Surface Coating of Cans, Coils, Paper, Fabrics, Automobiles, and Light-Duty Trucks.
Fiberglass Boat Manufacturing	EPA–453/R–08–004, Controls Techniques Guidelines for Fiberglass Boat Manufacturing.
Flat Wood Paneling, Surface Coating of	EPA–450/2–78–032, Control of Volatile Organic Emissions from Existing Stationary Sources—Volume VII: Factory Surface Coating of Flat Wood Paneling. EPA–453/R–06–004, Control Techniques Guidelines for Flat Wood Paneling Coatings.
Flexible Packing Printing	EPA–453/R–06–003, Control Techniques Guidelines for Flexible Package Printing.
Graphic Arts—Rotogravure and Flexography	EPA–450/2–78–033, Control of Volatile Organic Emissions from Existing Stationary Sources, Volume III: Graphic Arts—Rotogravure and Flexography.
Large Appliances, Surface Coating of	EPA–450/2–77–034, Control of Volatile Organic Emissions from Existing Stationary Sources—Volume V: Surface Coating of Large Appliances. EPA–453/R–07–004, Control Techniques Guidelines for Large Appliance Coatings.
Large Petroleum Dry Cleaners	EPA–450/3–82–009, Control of Volatile Organic Compound Emissions from Large Petroleum Dry Cleaners.
Offset Lithographic Printing and Letterpress Printing	EPA–453/R–06–002, Control Techniques Guidelines for Offset Lithographic Printing and Letterpress Printing.
Magnet Wire, Surface Coating for Insulation of	EPA–450/2–77–033, Control of Volatile Organic Emissions from Existing Stationary Sources—Volume IV: Surface Coating of Insulation of Magnet Wire.
Metal Furniture Coatings	EPA–450/2–77–032, Control of Volatile Organic Emissions from Existing Stationary Sources—Volume III: Surface Coating of Metal Furniture. EPA–453/R–07–005, Control Techniques Guidelines for Metal Furniture Coatings.
Miscellaneous Metal and Plastic Parts Coatings	EPA–453/R–08–003, Control Techniques Guidelines for Miscellaneous Metal and Plastic Parts Coatings.
Miscellaneous Metal Parts and Products, Surface Coating of	EPA–450/2–78–015, Control of Volatile Organic Emissions from Existing Stationary Sources—Volume IV: Surface Coating of Miscellaneous Metal Parts and Products.
Miscellaneous Industrial Adhesives	EPA–453/R–08–005, Control Techniques Guidelines for Miscellaneous Industrial Adhesives.
Natural Gas/Gasoline Processing Plants Equipment Leaks	EPA–450/2–83–007, Control of Volatile Organic Compound Equipment Leaks from Natural Gas/Gasoline Processing Plants.
Paper, Film and Foil Coatings	EPA–453R–07–003, Control Techniques Guidelines for Paper, Film and Foil Coatings.
Petroleum Refineries	EPA–450/2–77–025, Control of Refinery Vacuum Producing Systems, Wastewater Separators, and Process Unit Turnarounds. EPA–450/2–78–036, Control of Volatile Organic Compound Leaks from Petroleum Refinery Equipment.
Pharmaceutical Products	EPA–450/2–78–029, Control of Volatile Organic Emissions from Manufacture of Synthesized Pharmaceutical Products.
Pneumatic Rubber Tires, Manufacture of	EPA–450/2–78–030, Control of Volatile Organic Emissions from Manufacture of Pneumatic Rubber Tires.
Polyester Resin	EPA–450/3–83–008, Control of Volatile Organic Compound Emissions from Manufacture of High-Density Polyethylene, Polypropylene, and Polystyrene Resins. EPA–450/3–83–006, Control of Volatile Organic Compound Leaks from Synthetic Organic Chemical Polymer and Resin Manufacturing Equipment.
Shipbuilding/Repair	EPA–453/R–94–032, Shipbuilding/Repair.

CTG Source category	Negative declaration CTG reference document
Synthetic Organic Chemical	EPA–450/3–84–015, Control of Volatile Organic Compound Emissions from Air Oxidation Processes in Synthetic Organic Chemical Manufacturing Industry.
	EPA–450/4–91–031, Control of Volatile Organic Compound Emissions from Reactor Processes and Distillation Operations in Synthetic Organic Chemical Manufacturing Industry.
Wood Furniture	EPA–453/R–96–007, Wood Furniture.

(ii) Submitted on December 21, 2010 and adopted on July 13, 2010.

(13) South Coast Air Quality Management District.

(i) Negative declarations for the 2008 ozone standard: Control Techniques Guidelines for Shipbuilding and Ship Repair Operations (Surface Coating) including (published on August 27, 1996) and EPA 453/R–94–032 Alternative Control Techniques Document: Surface Coating Operations at Shipbuilding and Ship Repair Facilities; paper coating portion of EPA 453/R–07–003 Control Techniques Guidelines for Paper, Film, and Foil Coatings.

(ii) [Reserved]

(14) Yolo-Solano Air Quality Management District.

(i) The following negative declarations are for the 1997 8-hour ozone NAAQS.

CTG source category	Negative declaration CTG reference document	Submitted 1/31/07, adopted 9/13/06	Submitted 2/22/18, adopted 1/10/18
Aerospace	EPA–453/R–97–004 Aerospace Manufacturing and Rework Operations.	X	
Ships	61 FR 44050 Shipbuilding and Ship Repair	X	
Metal Coil Container and Closure.	EPA–450/2–77–008 Surface Coating of Cans, Coils, Paper, Fabrics, Automobiles, and Light-Duty Trucks.	X	
Magnetic Wire	EPA–450/2–77–033 Surface Coating of Insulation of Magnet Wire.	X	
Natural Gas/Gasoline Processing Plants, Equipment Leaks.	EPA–450/2–83–007 Equipment Leaks from Natural Gas/Gasoline Processing Plants.	X	
Refineries	EPA–450/2–77–025 Refinery Vacuum Producing Systems, Wastewater Separators, and Process Unit Turnarounds.	X	
	EPA–450/2–78–036 VOC Leaks from Petroleum Refinery Equipment.	X	
Paper and Fabric	EPA–450/2–77–008 Surface Coating of Cans, Coils, Paper, Fabrics, Automobiles, and Light-Duty Trucks.	X	
Dry Cleaning	EPA–450/3–82–009 Large Petroleum Dry Cleaners	X	
Rubber Tires	EPA–450/2–78–030 Manufacture of Pneumatic Rubber Tires.	X	
Large Appliances, Surface Coating.	EPA–450/2–77–034 Surface Coating of Large Appliances.	X	
Wood Coating	EPA–450/2–78–032 Factory Surface of Flat Wood Paneling.	X	
Polyester Resin	EPA–450/3–83–006 Fugitive Emissions from Synthetic Organic Chemical Polymer and Resin Manufacturing Equipment.	X	
	EPA–450/3–83–008 Manufacture of High-Density Polyethylene, Polypropylene, and Polystyrene Resins.	X	
Pharmaceutical Products	EPA–450/2–78–029—Control of Volatile Organic Emissions from Manufacture of Synthesized Pharmaceutical Products.		X
Wood Furniture Coating	EPA–453/R–96–007—Control of Volatile Organic Emissions from Wood Furniture Manufacturing Operations.		X
Synthetic Organic Chemical	EPA–450/3–84–015—Control of Volatile Organic Compound Emissions from Air Oxidation Processes in Synthetic Organic Chemical Manufacturing Industry.		X
	EPA–450/4–91–031—Control of Volatile Organic Compound Emissions from Reactor Processes and Distillation Operations in Synthetic Organic Chemical Manufacturing Industry.		X

(ii) [Reserved]

(b) The following air pollution control districts submitted negative declarations for oxides of nitrogen source categories to satisfy the requirements of section 182 of the Clean Air Act, as amended. The following negative declarations are approved as additional information to the State Implementation Plan.

(1) Sacramento Metropolitan Air Quality Management District.

(i) Nitric and Adipic Acid Manufacturing Plants, Utility Boilers, Cement Manufacturing Plants, Glass Manufacturing Plants, and Iron and Steel Manufacturing Plants were submitted on March 4, 1996, and adopted on August 3, 1995.

(2) San Joaquin Valley Unified Air Pollution Control District.

(i) Nitric and Adipic Acid Manufacturing Plants, Cement Manufacturing Plants, Asphalt Batch Plants, Iron and Steel Manufacturing Plants, and Driers were submitted on October 17, 1994 and adopted on September 14, 1994.

(3) Placer County Air Pollution Control District.

(i) Nitric and Adipic Acid Manufacturing Plants, Utility Boilers, Cement Manufacturing Plants, Glass Manufacturing Plants, and Iron and Steel Manufacturing Plants were submitted on February 25, 1998 and adopted on October 9, 1997.

(4) Antelope Valley Air Pollution Control District.

(i) Boilers and Process Heaters In Petroleum Refineries submitted on May 13, 1999 and adopted on April 21, 1998.

(ii) Cement Kilns and Glass Melting Furnaces submitted on July 23, 1999 and adopted on March 16, 1999.

(iii) Nitric Acid Units submitted on March 28, 2000 and adopted on January 18, 2000.

[60 FR 47076, Sept. 11, 1995]

EDITORIAL NOTE: For FEDERAL REGISTER citations affecting § 52.222, see the List of CFR Sections Affected, which appears in the Finding Aids section of the printed volume and at *www.fdsys.gov*.

§ 52.223 Approval status.

(a) With the exceptions set forth in this subpart, the Administrator approves California's plan for the attainment and maintenance of the national standards under section 110 of the Clean Air Act.

(b) With the exceptions set forth in this subpart, the Administrator approves the plan with respect to Part D, Title I of the Clean Air Act, as amended in 1977, for the nonattainment areas listed in this paragraph. In addition, continued satisfaction of the requirements of Part D for the ozone portion of the State Implementation Plan (SIP) depends on the adoption and submittal of reasonably available control technology (RACT) requirements by July 1, 1980, for sources covered by Control Technique Guidelines (CTGs) issued between January 1978 and January 1979 and adoption and submittal by each subsequent January of additional RACT requirements for sources covered by CTGs issued by the previous January.

(1) Imperial County for O_3.

(2) North Central Coast Air Basin for O_3.

(3) South Coast Air Basin for O_3, CO, NO_2, and PM.

(4) San Diego Air Basin for O_3, CO, and TSP.

(5) San Joaquin Valley Air Basin.

(i) Kern County nonattainment area for ozone, CO, SO_2, and PM.

(ii) Kings County for O_3 and TSP.

(iii) Madera County for O_3 and TSP.

(iv) Merced County for O_3 and TSP.

(v) San Joaquin County for CO, O_3 and TSP.

(vi) Stanislaus County for CO, O_3 and TSP.

(vii) Tulare County for O_3 and TSP.

(viii) Fresno County for O_3, CO, and TSP.

(6) South Central Coast Air Basin.

(i) Santa Barbara County nonattainment area for O_3, CO and TSP.

(ii) Ventura County for O_3, CO and TSP.

(7) Sacramento Valley Air Basin.

(i) Butte County for O_3 and CO.

(ii) Sutter County for O_3.

(iii) Yuba County for O_3.

(iv) Sacramento AQMA for O_3.

(v) Sacramento County Metropolitan Area for CO.

(8) Southeast Desert Air Basin.

(i) Los Angeles County for Ozone.

(ii) San Bernardino County for Ozone.

(iii) Riverside County for Ozone.

(9) San Francisco Bay Area Air Basin for O_3, CO and TSP.

(10) Mountain Counties Air Basin.

(i) El Dorado County (Mountain Counties Air Basin portion) for O_3.

(ii) Placer County (Mid-County portion) for O_3.

(c) [Reserved]

(d) With the exceptions set forth in this subpart, the Administrator approves the plan with respect to Part D, Title I of the Clean Air Act, as amended in 1977, for the nonattainment areas listed in this paragraph.

(1) Lake Tahoe Basin for CO.

(2) EPA approves the CO plan for the Lake Tahoe Basin as meeting the requirements of Part D. This approval includes the resolution of the Lake Tahoe Regional Planning Agency banning new source construction pending the adoption of a new regional plan and ordinances. However, EPA disapproves the plan for any future time during which the Tahoe Regional Planning Agency may remove its construction ban prior to EPA approval of the new regional plan and ordinances.

(e) The Administrator approves the following portions of the 1999 Ozone Attainment Plan for the San Francisco Bay Area submitted by the California Air Resources Board on August 13, 1999: the 1995 baseline emissions inventory, the reasonable further progress demonstration, and the deletion of transportation control measures #6 and #16.

(f)(1) Insofar as the Prevention of Significant Deterioration (PSD) provisions found in North Coast Unified Air Quality Management District's approved plan apply to stationary sources of greenhouse gas (GHGs) emissions, the Administrator approves that application only to the extent that GHGs are ''subject to regulation'', as provided in this paragraph (b), and the Administrator takes no action on that application to the extent that GHGs are not ''subject to regulation.''

(2) Beginning January 2, 2011, the pollutant GHGs is subject to regulation if:

(i) The stationary source is a new major stationary source for a regulated NSR pollutant that is not GHGs, and also will emit or will have the potential to emit 75,000 tpy CO_2e or more; or

(ii) The stationary source is an existing major stationary source for a regulated NSR pollutant that is not GHGs, and also will have an emissions increase of a regulated NSR pollutant, and an emissions increase of 75,000 tpy CO_2e or more; and

(3) Beginning July 1, 2011, in addition to the provisions in paragraph (b)(2) of this section, the pollutant GHGs shall also be subject to regulation:

(i) At a new stationary source that will emit or have the potential to emit 100,000 tpy CO_2e; or

(ii) At an existing stationary source that emits or has the potential to emit 100,000 tpy CO_2e, when such stationary source undertakes a physical change or change in the method of operation that will result in an emissions increase of 75,000 tpy CO_2e or more.

(4) For purposes of this paragraph (b)—

(i) The term greenhouse gas shall mean the air pollutant defined in 40 CFR 86.1818–12(a) as the aggregate group of six greenhouse gases: Carbon dioxide, nitrous oxide, methane, hydrofluorocarbons, perfluorocarbons, and sulfur hexafluoride.

(ii) The term tpy CO_2 equivalent emissions (CO_2e) shall represent an amount of GHGs emitted, and shall be computed as follows:

(A) Multiplying the mass amount of emissions (tpy), for each of the six greenhouse gases in the pollutant GHGs, by the gas's associated global warming potential published at Table A–1 to subpart A of 40 CFR part 98—Global Warming Potentials.

(B) Sum the resultant value from paragraph (b)(4)(ii)(A) of this section for each gas to compute a tpy CO_2e.

(iii) The term emissions increase shall mean that both a significant emissions increase (as calculated using the procedures in the EPA-approved North Coast Unified Air Quality Management District rules at R1–1–130(s2)) and a significant net emissions increase (as defined in the North Coast Unified Air Quality Management District rules at R1–1–130(n1)) occur. For the pollutant GHGs, an emissions increase shall be based on tpy CO_2e, and shall be calculated assuming the pollutant GHGs is a regulated NSR pollutant, and ''significant'' is defined as 75,000 tpy CO_2e instead of applying the value in the EPA-approved North Coast

Unified Air Quality Management District rules at R1–1–130(s2).

(g)(1) Insofar as the Prevention of Significant Deterioration (PSD) provisions found in Northern Sonoma County Air Pollution Control District's approved plan apply to stationary sources of greenhouse gas (GHGs) emissions, the Administrator approves that application only to the extent that GHGs are ''subject to regulation'', as provided in this paragraph (b), and the Administrator takes no action on that application to the extent that GHGs are not ''subject to regulation.''

(2) Beginning January 2, 2011, the pollutant GHGs is subject to regulation if:

(i) The stationary source is a new major stationary source for a regulated NSR pollutant that is not GHGs, and also will emit or will have the potential to emit 75,000 tpy CO_2e or more; or

(ii) The stationary source is an existing major stationary source for a regulated NSR pollutant that is not GHGs, and also will have an emissions increase of a regulated NSR pollutant, and an emissions increase of 75,000 tpy CO_2e or more; and,

(3) Beginning July 1, 2011, in addition to the provisions in paragraph (b)(2) of this section, the pollutant GHGs shall also be subject to regulation:

(i) At a new stationary source that will emit or have the potential to emit 100,000 tpy CO_2e; or

(ii) At an existing stationary source that emits or has the potential to emit 100,000 tpy CO_2e, when such stationary source undertakes a physical change or change in the method of operation that will result in an emissions increase of 75,000 tpy CO_2e or more.

(4) For purposes of this paragraph (b)—

(i) The term greenhouse gas shall mean the air pollutant defined in 40 CFR 86.1818–12(a) as the aggregate group of six greenhouse gases: Carbon dioxide, nitrous oxide, methane, hydrofluorocarbons, perfluorocarbons, and sulfur hexafluoride.

(ii) The term tpy CO_2 equivalent emissions (CO_2e) shall represent an amount of GHGs emitted, and shall be computed as follows:

(A) Multiplying the mass amount of emissions (tpy), for each of the six greenhouse gases in the pollutant GHGs, by the gas's associated global warming potential published at Table A–1 to subpart A of 40 CFR part 98—Global Warming Potentials.

(B) Sum the resultant value from paragraph (b)(4)(ii)(A) of this section for each gas to compute a tpy CO_2e.

(iii) The term emissions increase shall mean that both a significant emissions increase (as calculated using the procedures in the EPA-approved Northern Sonoma County Air Pollution Control District rules at R1–1–130(s2)) and a significant net emissions increase (as defined in the Northern Sonoma County Air Pollution Control District rules at R1–1–130(n1)) occur. For the pollutant GHGs, an emissions increase shall be based on tpy CO_2e, and shall be calculated assuming the pollutant GHGs is a regulated NSR pollutant, and ''significant'' is defined as 75,000 tpy CO_2e instead of applying the value in the EPA-approved Northern Sonoma County Air Pollution Control District rules at R1–1–130(s2).

(h)(1) Insofar as the Prevention of Significant Deterioration (PSD) provisions found in Mendocino County Air Quality Management District's approved plan apply to stationary sources of greenhouse gas (GHGs) emissions, the Administrator approves that application only to the extent that GHGs are ''subject to regulation'', as provided in this paragraph (b), and the Administrator takes no action on that application to the extent that GHGs are not ''subject to regulation.''

(2) Beginning January 2, 2011, the pollutant GHGs is subject to regulation if:

(i) The stationary source is a new major stationary source for a regulated NSR pollutant that is not GHGs, and also will emit or will have the potential to emit 75,000 tpy CO_2e or more; or

(ii) The stationary source is an existing major stationary source for a regulated NSR pollutant that is not GHGs, and also will have an emissions increase of a regulated NSR pollutant, and an emissions increase of 75,000 tpy CO_2e or more; and,

(3) Beginning July 1, 2011, in addition to the provisions in paragraph (b)(2) of this section, the pollutant GHGs shall also be subject to regulation:

(i) At a new stationary source that will emit or have the potential to emit 100,000 tpy CO_2e; or

(ii) At an existing stationary source that emits or has the potential to emit 100,000 tpy CO_2e, when such stationary source undertakes a physical change or change in the method of operation that will result in an emissions increase of 75,000 tpy CO_2e or more.

(4) For purposes of this paragraph (b)—

(i) The term greenhouse gas shall mean the air pollutant defined in 40 CFR 86.1818–12(a) as the aggregate group of six greenhouse gases: Carbon dioxide, nitrous oxide, methane, hydrofluorocarbons, perfluorocarbons, and sulfur hexafluoride.

(ii) The term tpy CO_2 equivalent emissions (CO_2e) shall represent an amount of GHGs emitted, and shall be computed as follows:

(A) Multiplying the mass amount of emissions (tpy), for each of the six greenhouse gases in the pollutant GHGs, by the gas's associated global warming potential published at Table A–1 to subpart A of 40 CFR part 98—Global Warming Potentials.

(B) Sum the resultant value from paragraph (b)(4)(ii)(A) of this section for each gas to compute a tpy CO_2e.

(iii) The term emissions increase shall mean that both a significant emissions increase (as calculated using the procedures in the EPA-approved Mendocino County Air Quality Management District rules at R1–1–130(s2)) and a significant net emissions increase (as defined in the Mendocino County Air Quality Management District rules at R1–1–130(m1) (1982)) occur. For the pollutant GHGs, an emissions increase shall be based on tpy CO_2e, and shall be calculated assuming the pollutant GHGs is a regulated NSR pollutant, and ''significant'' is defined as 75,000 tpy CO_2e instead of applying the value in the EPA-approved Mendocino County Air Quality Management District rules at R1–1–130(s2).

(i) *1997 ozone NAAQS:* The 2007 Infrastructure SIP, submitted on November 16, 2007, and the 2014 Multi-pollutant Infrastructure SIP, submitted on March 6, 2014, are partially disapproved for specific requirements of Clean Air Act section 110(a)(2) for the 1997 8-hour ozone NAAQS for the Air Pollution Control Districts (APCDs), Air Quality Management Districts (AQMDs), or Air Quality Control Regions (AQCRs) listed in this paragraph.

(1)–(2) [Reserved]

(3) North Coast Unified AQMD (PSD requirements for the regulation of $PM_{2.5}$, $PM_{2.5}$ precursors, condensable $PM_{2.5}$, $PM_{2.5}$ increments, and NO_X as an ozone precursor, only) for sections 110(a)(2)(C), (D)(i)(II) (interfere with measures in any other state to prevent significant deterioration of air quality, only), and (J).

(4) [Reserved]

(5) All areas in California that are subject to the Federal PSD program as provided in 40 CFR 52.270 for sections 110(a)(2)(C), (D)(i)(II) (interfere with measures in any other state to prevent significant deterioration of air quality, only), and (J), except for South Coast AQMD where the Federal PSD program applies to greenhouse gases, only.

(6) All areas in California that are subject to the Federal PSD program as provided in 40 CFR 52.270 for sections 110(a)(2)(D)(ii) (with respect to section 126(a), only).

(7) [Reserved]

(j) *1997 $PM_{2.5}$ NAAQS:* The 2007 Infrastructure SIP, submitted on November 16, 2007, and the 2014 Multi-pollutant Infrastructure SIP, submitted on March 6, 2014, are partially disapproved for specific requirements of Clean Air Act section 110(a)(2) for the 1997 $PM_{2.5}$ NAAQS for the Air Pollution Control Districts (APCDs), Air Quality Management Districts (AQMDs), or Air Quality Control Regions (AQCRs) listed in this paragraph.

(1) [Reserved]

(2) North Coast Unified AQMD (PSD requirements for the regulation of $PM_{2.5}$, $PM_{2.5}$ precursors, condensable $PM_{2.5}$, $PM_{2.5}$ increments, and NO_X as an ozone precursor, only) for sections 110(a)(2)(C), (D)(i)(II) (interfere with measures in any other state to prevent significant deterioration of air quality, only), and (J).

(3) [Reserved]

(4) All areas in California that are subject to the Federal PSD program as provided in 40 CFR 52.270 for sections 110(a)(2)(C), (D)(i)(II) (interfere with measures in any other state to prevent

significant deterioration of air quality, only), and (J), except for South Coast AQMD where the Federal PSD program applies to greenhouse gases, only.

(5) All areas in California that are subject to the Federal PSD program as provided in 40 CFR 52.270 for sections 110(a)(2)(D)(ii) (with respect to section 126(a), only).

(6) San Joaquin Valley Mountain Counties AQCR for section 110(a)(2)(G).

(k) *2006 $PM_{2.5}$ NAAQS* and *2012 $PM_{2.5}$ NAAQS:* The 2014 Multi-pollutant Infrastructure SIP, submitted on March 6, 2014, is partially disapproved for specific requirements of Clean Air Act section 110(a)(2) for the 2006 $PM_{2.5}$ NAAQS and 2012 $PM_{2.5}$ NAAQS for the Air Pollution Control Districts (APCDs), Air Quality Management Districts (AQMDs), or Air Quality Control Regions (AQCRs) listed in this paragraph.

(1) [Reserved]

(2) North Coast Unified AQMD (PSD requirements for the regulation of $PM_{2.5}$, $PM_{2.5}$ precursors, condensable $PM_{2.5}$, $PM_{2.5}$ increments, and NO_X as an ozone precursor, only) for sections 110(a)(2)(C), (D)(i)(II) (interfere with measures in any other state to prevent significant deterioration of air quality, only), and (J).

(3) [Reserved]

(4) All areas in California that are subject to the Federal PSD program as provided in 40 CFR 52.270 for sections 110(a)(2)(C), (D)(i)(II) (interfere with measures in any other state to prevent significant deterioration of air quality, only), and (J), except for South Coast AQMD where the Federal PSD program applies to greenhouse gases, only.

(5) All areas in California that are subject to the Federal PSD program as provided in 40 CFR 52.270 for sections 110(a)(2)(D)(ii) (with respect to section 126(a), only).

(6) San Joaquin Valley Mountain Counties AQCR for section 110(a)(2)(G).

(l) *2008 ozone NAAQS:* The 2014 Multi-pollutant Infrastructure SIP, submitted on March 6, 2014, is partially disapproved for specific requirements of Clean Air Act section 110(a)(2) for the 2008 8-hour ozone NAAQS for the Air Pollution Control Districts (APCDs), Air Quality Management Districts (AQMDs), or Air Quality Control Regions (AQCRs) listed in this paragraph.

(1)–(2) [Reserved]

(3) North Coast Unified AQMD (PSD requirements for the regulation of $PM_{2.5}$, $PM_{2.5}$ precursors, condensable $PM_{2.5}$, $PM_{2.5}$ PSD, and NO_X as an ozone precursor, only) for sections 110(a)(2)(C), (D)(i)(II) (interfere with measures in any other state to prevent significant deterioration of air quality, only), and (J).

(4) [Reserved]

(5) All areas in California that are subject to the Federal PSD program as provided in 40 CFR 52.270 for sections 110(a)(2)(C), (D)(i)(II) (interfere with measures in any other state to prevent significant deterioration of air quality, only), and (J), except for South Coast AQMD where the Federal PSD program applies to greenhouse gases, only.

(6) All areas in California that are subject to the Federal PSD program as provided in 40 CFR 52.270 for sections 110(a)(2)(D)(ii) (with respect to section 126(a), only).

(7) [Reserved]

(m) *2008 Pb NAAQS:* The 2011 Pb Infrastructure SIP, submitted on September 22, 2011, and the 2014 Multi-pollutant Infrastructure SIP, submitted on March 6, 2014, are partially disapproved for specific requirements of Clean Air Act section 110(a)(2) for the 2008 Pb NAAQS for the Air Pollution Control Districts (APCDs), Air Quality Management Districts (AQMDs), or Air Quality Control Regions (AQCRs) listed in this paragraph.

(1) [Reserved]

(2) North Coast Unified AQMD (PSD requirements for the regulation of $PM_{2.5}$, $PM_{2.5}$ precursors, condensable $PM_{2.5}$, $PM_{2.5}$ increments, and NO_X as an ozone precursor, only) for sections 110(a)(2)(C), (D)(i)(II) (interfere with measures in any other state to prevent significant deterioration of air quality, only), and (J).

(3) [Reserved]

(4) All areas in California that are subject to the Federal PSD program as provided in 40 CFR 52.270 for sections 110(a)(2)(C), (D)(i)(II) (interfere with measures in any other state to prevent significant deterioration of air quality, only), and (J), except for South Coast

AQMD where the Federal PSD program applies to greenhouse gases, only.

(5) All areas in California that are subject to the Federal PSD program as provided in 40 CFR 52.270 for sections 110(a)(2)(D)(ii) (with respect to section 126(a), only).

(n) *2010 NO_2 NAAQS:* The 2012 NO_2 Infrastructure SIP, submitted on November 15, 2012, and the 2014 Multi-pollutant Infrastructure SIP, submitted on March 6, 2014, are partially disapproved for specific requirements of Clean Air Act section 110(a)(2) for the 2010 NO_2 NAAQS for the Air Pollution Control Districts (APCDs), Air Quality Management Districts (AQMDs), or Air Quality Control Regions (AQCRs) listed in this paragraph.

(1) [Reserved]

(2) North Coast Unified AQMD (PSD requirements for the regulation of $PM_{2.5}$, $PM_{2.5}$ precursors, condensable $PM_{2.5}$, $PM_{2.5}$ increments, and NO_X as an ozone precursor, only) for sections 110(a)(2)(C), (D)(i)(II) (interfere with measures in any other state to prevent significant deterioration of air quality, only), and (J).

(3) [Reserved]

(4) All areas in California that are subject to the Federal PSD program as provided in 40 CFR 52.270 for sections 110(a)(2)(C), (D)(i)(II) (interfere with measures in any other state to prevent significant deterioration of air quality, only), and (J), except for South Coast AQMD where the Federal PSD program applies to greenhouse gases, only.

(5) All areas in California that are subject to the Federal PSD program as provided in 40 CFR 52.270 for sections 110(a)(2)(D)(ii) (with respect to section 126(a), only).

(o) *2010 SO_2 NAAQS:* The 2014 Multi-pollutant Infrastructure SIP, submitted on March 6, 2014, is partially disapproved for specific requirements of Clean Air Act section 110(a)(2) for the 2010 SO_2 NAAQS for the Air Pollution Control Districts (APCDs), Air Quality Management Districts (AQMDs), or Air Quality Control Regions (AQCRs) listed in this paragraph.

(1) [Reserved]

(2) North Coast Unified AQMD (PSD requirements for the regulation of $PM_{2.5}$, $PM_{2.5}$ precursors, condensable $PM_{2.5}$, $PM_{2.5}$ increments, and NO_X as an ozone precursor, only) for sections 110(a)(2)(C), (D)(i)(II) (interfere with measures in any other state to prevent significant deterioration of air quality, only), and (J).

(3) [Reserved]

(4) All areas in California that are subject to the Federal PSD program as provided in 40 CFR 52.270 for sections 110(a)(2)(C), (D)(i)(II) (interfere with measures in any other state to prevent significant deterioration of air quality, only), and (J), except for South Coast AQMD where the Federal PSD program applies to greenhouse gases, only.

(5) All areas in California that are subject to the Federal PSD program as provided in 40 CFR 52.270 for sections 110(a)(2)(D)(ii) (with respect to section 126(a), only).

[45 FR 74484, Nov. 11, 1980]

EDITORIAL NOTE: For FEDERAL REGISTER citations affecting § 52.223, see the List of CFR Sections Affected, which appears in the Finding Aids section of the printed volume and at *www.fdsys.gov*.

§ 52.224 General requirements.

(a) The requirements of § 51.116(c) of this chapter are not met except in certain Air Pollution Control Districts (APCD) as indicated in this paragraph since the plan does not provide procedures by which emission data, as correlated with applicable emission limitations, will be made available to the public.

(1) The following APCD's meet the requirements of § 51.116(c) of this chapter:

(i) Siskiyou County APCD.

(ii) San Diego County APCD.

(iii) Great Basin Unified APCD.

(iv) Del Norte County APCD.

(v) Humboldt County APCD.

(vi) Mendocino County APCD.

(vii) Northern Sonoma County APCD.

(viii) Trinity County APCD.

(ix) Amador County APCD.

(2) The following APCD's do not provide for the correlation of emission data with applicable emission limitations as required by § 51.116(c) of this chapter. In these APCD's, only the requirements of § 52.224(b)(4) are in effect:

(i) Merced County APCD.

(ii) Stanislaus County APCD.

(iii) Fresno County APCD.

(iv) Calaveras County APCD.

(v) Tuolumne County APCD.
(vi) San Joaquin County APCD.
(vii) Mariposa County APCD.
(viii) Tulare County APCD.
(ix) Kern County APCD.
(x) Madera County APCD.
(xi) Yolo-Solano APCD.
(xii) Sutter County APCD.
(xiii) Glenn County APCD.
(xiv) Tehama County APCD.
(xv) Sierra County APCD.
(xvi) Shasta County APCD.
(xvii) Sacramento County APCD.
(xviii)–(xix) [Reserved]
(xx) Lake County APCD.
(xxi) Imperial County APCD.
(xxii) [Reserved]
(xxiii) Ventura County APCD.
(xxiv) Monterey Bay Unified APCD.
(xxv) [Reserved]
(xxvi) San Luis Obispo County APCD.
(xxvii) Kings County APCD.
(xxviii) Plumas County APCD.
(xxix) Nevada County APCD.

(b) *Regulation for public availability of emission data.* (1) Any person who cannot obtain emission data from the Agency responsible for making emission data available to the public, as specified in the applicable plan, except for those APCD's specified in paragraph (a) of this section, concerning emissions from any source subject to emission limitations which are part of the approved plan may request that the appropriate Regional Administrator obtain and make public such data. Within 30 days after receipt of any such written request, the Regional Administrator shall require the owner or operator of any such source to submit information within 30 days on the nature and amounts of emissions from such source and any other information as may be deemed necessary by the Regional Administrator to determine whether such source is in compliance with applicable emission limitations or other control measures that are part of the applicable plan.

(2) Commencing after the initial notification by the Regional Administrator pursuant to paragraph (b)(1) of this section, the owner or operator of the source shall maintain records of the nature and amounts of emissions from such source and any other information as may be deemed necessary by the Regional Administrator to determine whether such source is in compliance with applicable emission limitations or other control measures that are part of the plan. The information recorded shall be summarized and reported to the Regional Administrator, on forms furnished by the Regional Administrator, and shall be submitted within 45 days after the end of the reporting period. Reporting periods are January 1 to June 30 and July 1 to December 31.

(3) Information recorded by the owner or operator and copies of this summarizing report submitted to the Regional Administrator shall be retained by the owner or operator for 2 years after the date on which the pertinent report is submitted.

(4) Emission data obtained from owners or operators of stationary sources will be correlated with applicable emission limitations and other control measures that are part of the applicable plan and will be available at the appropriate regional office and at other locations in the state designated by the Regional Administrator.

(c) The deletion of the following rules or portions of rules is disapproved, since these regulations are necessary to fulfill the requirements of 40 CFR 51.116(c).

(1) Northcoast intrastate region:

(i) Lake County APCD.

(A) Section 49a, *Public Records,* and Section 49b, *Record,* of Part III, *Definitions;* and Part II, *Authorization and Disclosure,* submitted on October 23, 1974 and previously approved under 40 CFR 52.223, are retained.

[40 FR 55328, Nov. 28, 1975]

EDITORIAL NOTE: For FEDERAL REGISTER citations affecting § 52.224, see the List of CFR Sections Affected, which appears in the Finding Aids section of the printed volume and at *www.fdsys.gov.*

§ 52.225 Legal authority.

(a) [Reserved]

(b) The requirements of § 51.230(f) of this chapter are not met since authority to make emission data available to the public inadequate. Such release is precluded under certain circumstances.

[37 FR 10852, May 31, 1972, as amended at 51 FR 40676, Nov. 7, 1986; 81 FR 18780, Apr. 1, 2016]

§ 52.226 Control strategy and regulations: Particulate matter, San Joaquin Valley and Mountain Counties Intrastate Regions.

(a) [Reserved]

(b) The following regulatory changes represent a relaxation of previously submitted regulations and an adequate control strategy has not been submitted showing that the relaxation will not interfere with attainment and maintenance of the National Ambient Air Quality Standards for particulate matter:

(1) Kings County APCD.

(i) Rule 405, Process Weight, submitted on July 25, 1973 is disapproved; and Rule 405, submitted on June 30, 1972, and previously approved in 40 CFR 52.223 is retained.

(ii) Rule 407.1, *Disposal of Solid and Liquid Wastes*, submitted on November 4, 1977, is disapproved; and Rule 407.1, *Disposal of Solid and Liquid Wastes*, submitted on June 30, 1972, and previously approved under 40 CFR 52.223 is retained.

(2) Calaveras County APCD.

(i) The revocation of Rule 407(b), Combustion Contaminants, is disapproved; and Rule 407(b), submitted on June 30, 1972, and previously approved in 40 CFR 52.223 is retained.

(ii) The revocation of Rule 408, Fuel Burning Equipment, is disapproved; and Rule 408, submitted on June 30, 1972, and previously approved in 40 CFR 52.223 is retained.

(iii) The addition of Rule 209, Fossil Fuel-Steam Generator Facility, is disapproved; and Rule 408, submitted on June 30, 1972 and previously approved in 40 CFR 52.223 is retained.

(3) Tuolumne County APCD.

(i) Rule 207, Particulate Matter, submitted on July 22, 1975, is disapproved; and Rules 404 and 407(b), submitted on June 30, 1972 and previously approved in 40 CFR 52.223 are retained.

(ii) Rule 209, Fossil Fuel-Steam Generator Facility, submitted on July 22, 1975, is disapproved; and Rule 408, submitted on June 30, 1972, and previously approved in 40 CFR 52.223 is retained.

(iii) Rule 207, Particulate Matter, submitted on February 10, 1977, is disapproved and the previously approved Rules 404 and 407(b), submitted on June 30, 1972, remain in effect.

(iv) Rule 209, Fossil Fuel-Steam Generator Facility, submitted on February 10, 1977, is disapproved and the previously approved Rule 408, submitted on June 30, 1972, remains in effect.

(4) Fresno County APCD.

(i) Rule 407, Disposal of Solid or Liquid Wastes, submitted on February 10, 1976, is disapproved; and Rule 407.1, submitted on June 30, 1972, and previously approved in 40 CFR 52.223 is retained.

(ii) Rule 407, Disposal of Solid or Liquid Wastes, submitted on November 10, 1976, is disapproved; and Rule 407.1, submitted on June 30, 1972 and previously approved in 40 CFR 52.223 is retained.

(5) San Joaquin County APCD.

(i) Rule 407.1, Disposal of Solid or Liquid Wastes, submitted on February 10, 1976, is disapproved; and Rule 407.1, submitted on June 30, 1972 and previously approved in 40 CFR 52.223 is retained.

(6) Mariposa County APCD.

(i) Rule 209, Fossil Fuel-Steam Generator Facility, submitted on January 10, 1975, is disapproved; and Rule 6.4, submitted on June 30, 1972 and previously approved in 40 CFR 52.223 is retained.

(7) Kern County APCD.

(i) Rule 407.1, Disposal of Solid or Liquid Wastes, submitted on July 22, 1975, is disapproved; and Rule 407.1, submitted on June 30, 1972 and previously approved in 40 CFR 52.223 is retained.

(8) Madera County APCD.

(i) Rule 405, Process Weight, submitted on January 10, 1975 is disapproved; and Rule 405, submitted on June 30, 1972 and previously approved in 40 CFR 52.223 is retained.

(9) Tulare County APCD.

(i) Paragraph b. of Rule 407.1.

(10) Merced County APCD.

(i) Rule 407.1, Disposal of Solid or Liquid Wastes, submitted on August 2, 1976 is disapproved; and Rule 407.1 submitted on June 30, 1972 and previously approved in 40 CFR 52.223 is retained.

[37 FR 10850, May 31, 1972]

EDITORIAL NOTE: For FEDERAL REGISTER citations affecting § 52.226, see the List of CFR Sections Affected, which appears in the Finding Aids section of the printed volume and at *www.fdsys.gov*.

§ 52.227 Control strategy and regulations: Particulate matter, Metropolitan Los Angeles Intrastate Region.

(a) The requirements of Subpart G of this chapter are not met since the plan does not provide for attainment and maintenance of the secondary standards for particulate matter in the Metropolitan Los Angeles Intrastate Region.

(b) The following regulations are disapproved since they are not part of the approved control strategy and do not provide for the degree of control needed for the attainment and maintenance of the primary standards for particulate matter in the Metropolitan Los Angeles Intrastate Region.

(1) Los Angeles County Air Pollution Control District:

(i) Regulation IV, Rule 68.1.

(2) Riverside County Air Pollution Control District:

(i) Regulation IV, Rule 54 for process sources with a process weight rate in excess of 62,000 lbs. per hour. Rule 54 is approved for process sources with a process weight of 62,000 lbs. per hour or less.

(3) Southern California APCD:

(i) Regulation IV, Rule 404 Particulate Matter—Concentration, submitted on August 2, 1976.

(ii) Regulation IV, Rule 473 Disposal of Solid and Liquid Wastes, submitted on August 2, 1976.

(4) South Coast AQMD.

(i) Rule 401(b) submitted on August 15, 1980.

(c) The rescission by the Southern California APCD of the following rules, which were previously approved in the May 31, 1972 (37 FR 10850) and September 22, 1972 (37 FR 19813) FEDERAL REGISTER issues, is disapproved since adequate replacement rules have not been submitted and no analysis has been presented to show that this rescission will not interfere with the attainment and maintenance of the NAAQS for particulate matter as required by section 110 of the Clean Air Act. In addition, the following rules, as submitted in June 1972 and approved for the SIP, remain federally enforceable:

(1) Los Angeles County APCD.

(i) Regulation IV, Rule 52 Particulate Matter—Concentration.

(ii) Regulation IV, Rule 58 Disposal of Solid and Liquid Wastes.

(2) San Bernardino County APCD.

(i) Regulation IV, Rule 52A Particulate Matter—Concentration.

(ii) Regulation IV, Rule 58A Disposal of Solid and Liquid Wastes.

(3) Riverside County APCD.

(i) Regulation IV, Rule 52 Particulate Matter—Concentration.

(ii) Regulation IV, Rule 58 Disposal of Solid and Liquid Wastes.

(4) Orange County APCD.

(i) Regulation IV, Rule 52 Particulate Matter—Concentration.

(ii) Regulation IV, Rule 58 Disposal of Solid and Liquid Wastes.

[37 FR 10850, May 31, 1972, as amended at 37 FR 19813, Sept. 22, 1972; 43 FR 25687, June 14, 1978; 49 FR 18824, May 3, 1984; 51 FR 40676, Nov. 7, 1986]

§ 52.228 Regulations: Particulate matter, Southeast Desert Intrastate Region.

(a) The following regulations are disapproved since they are not part of the approved control strategy and do not provide for the degree of control needed for the attainment and maintenance of the national standards for particulate matter in the Southeast Desert Intrastate Region.

(1) Imperial County Air Pollution Control District:

(i) Rule 114A.

(ii) Rule 116B.

(2) Los Angeles County Air Pollution Control District:

(i) Regulation IV, Rule 68.1.

(3) Riverside County Air Pollution Control District:

(i) Regulation IV, Rule 54 for process sources with a process weight rate in excess of 160,000 lbs. per hour. Rule 54 is approved for process sources with a process weight of 160,000 lbs. per hour or less.

(b) The following regulatory changes represent a relaxation of previously submitted regulations, and an adequate control strategy has not been submitted showing that the relaxation will not interfere with the attainment and maintenance of the national ambient air quality standards for particulate matter:

(1) Southeast Desert Intrastate Region:

(i) Imperial County APCD.

(A) Rule 406, Disposal of Solid and Liquid Wastes submitted on November 4, 1977 is disapproved; and Rule 116 C, Specific Contaminants submitted on June 30, 1972 and previously approved under 40 CFR 52.223 is retained.

(ii) Los Angeles County Air Pollution Control District.

(A) Regulation IV, Rule 404 Particulate Matter-Concentration, and Rule 473, Disposal of Solid and Liquid Wastes, submitted on June 6, 1977 are disapproved. Rules 52 and 58, titled as above, respectively, and submitted on June 30, 1972 and previously approved under 40 CFR 52.223 are retained.

(iii) Riverside County Air Pollution Control District.

(A) Regulation IV, Rules 404 Particulate Matter-Concentration, 405 Particulate Matter-Weight, and Rule 473, Disposal of Solid and Liquid Wastes, submitted on June 6, 1977 are disapproved. Rules 52, Particulate Matter-Weight, 54, Dust and Fumes, and 58, Disposal of Solid and Liquid Wastes, submitted in 1972 and approved under 40 CFR 52.223, are retained.

[37 FR 10850, May 31, 1972, as amended at 37 FR 19813, Sept. 22, 1972; 43 FR 35695, Aug. 11, 1978; 43 FR 40014, Sept. 8, 1978; 64 FR 49400, Sept. 13, 1999]

§ 52.229 Control strategy and regulations: Photochemical oxidants (hydrocarbons), Metropolitan Los Angeles Intrastate Region.

(a) [Reserved]

(b) The following rules are disapproved because they would result in a relaxation of control requirements contained in the presently approved State Implementation Plan, and no analysis has been presented to show that this relaxation will not interfere with the attainment and maintenance of NAAQS for photochemical oxidants (hydrocarbons) as required by section 110 of the Clean Air Act.

(1) Southern California APCD.

(i) Regulation IV, Rule 465 Vacuum Producing Devices or Systems, submitted on August 2, 1976.

(2) South Coast Air Quality Management District.

(i) Regulation IV, Rule 461 Gasoline Transfer and Dispensing, submitted on June 6, 1977. The version of this rule by the same number and title submitted on April 21, 1976 and approved under 40 CFR 52.223 is retained.

(ii) Rule 1115, Automotive Coatings, adopted on March 16, 1984 by the District and submitted by the state to EPA on July 10, 1984.

(iii) Rule 1113, Architectural Coatings, adopted on August 2, 1985 and submitted to EPA on November 12, 1985. The version of this rule by the same number and title submitted on July 10, 1984 and approved by EPA on January 24, 1985 is retained.

(c) The rescission by the Southern California APCD of the following rules, which were previously approved in the September 22, 1972 (37 FR 19813) FEDERAL REGISTER issue, is disapproved since adequate replacement rules have not been submitted and no analysis has been presented to show that this rescission will not interfere with the attainment and maintenance of the NAAQS for photochemical oxidants (hydrocarbons) as required by section 110 of the Clean Air Act. In addition, the following rules, as submitted in June 1972 and approved for the SIP, remain federally enforceable:

(1) Los Angeles County APCD, Regulation IV, Rule 69, Vacuum Producing Devices or Systems.

(2) San Bernardino County APCD, Regulation IV, Rule 69, Vacuum Producing Devices or Systems.

(3) Riverside County APCD, Regulation IV, Rule 74, Vacuum Producing Devices or Systems.

(4) Orange County APCD, Regulation IV, Rule 69, Vacuum Producing Devices or Systems.

[37 FR 10850, May 31, 1972, as amended at 43 FR 25687, June 14, 1978; 43 FR 40014, Sept. 8, 1978; 46 FR 5978, Jan. 21, 1981; 54 FR 5237, Feb. 2, 1989; 54 FR 34515, Aug. 21, 1989]

§ 52.230 Control strategy and regulations: Nitrogen dioxide.

(a) The requirements of § 52.14(c)(3) of this chapter as of September 22, 1972 (47 FR 1983), are not met since the plan does not provide for the degree of nitrogen oxides emission reduction attainable through application of reasonably available control technology in the Metropolitan Los Angeles Intrastate Region. Therefore, Rule 68.b of

the Orange County Air Pollution Control District is disapproved.

(b) The following rules are disapproved since they are not part of the approved control strategy and do not provide for the degree of control necessary for the attainment and maintenance of NAAQS for nitrogen dioxide in the Metropolitan Los Angeles Intrastate AQCR:

(1) Orange County APCD, Regulation IV, Rule 474, Fuel Burning Equipment—Oxides of Nitrogen, submitted on February 10, 1977.

(c) The rescission by the Southern California APCD of the following rules is disapproved since adequate replacement rules have not been submitted and no analysis has been presented to show that this rescission will not interfere with the attainment and maintenance of the National Ambient Air Quality Standards as required by section 110 of the Clean Air Act. In addition, the following rules, as submitted in June 1972 and approved for the SIP, remain federally enforceable:

(1) Orange County APCD, Regulation IV, Rule 68, Fuel Burning Equipment—NOx.

(2) Orange County APCD, Regulation IV, Rule 67.1, Fuel Burning Equipment.

[43 FR 25687, June 14, 1978, as amended at 46 FR 3884, Jan. 16, 1981; 51 FR 40677, Nov. 7, 1986]

§ 52.231 Regulations: Sulfur oxides.

(a) [Reserved]

(b) The deletion of the following rules or portions of rules is disapproved, since an adequate control strategy demonstration has not been submitted indicating that the deletions of the control requirements contained in those rules would not interfere with the attainment or maintenance of the National Ambient Air Quality Standard for Sulfur Oxides.

(1) Lake County Intrastate Region.

(i) Lake County, APCD.

(A) Section 3(F), *Sulfur* of Part V, *Prohibitions and Standards,* submitted on October 23, 1974 and previously approved under 40 CFR 52.223, is retained as applicable to sources other than sulfur recovery units.

[43 FR 34464, 34466, Aug. 4, 1978, as amended at 46 FR 3884, Jan. 16, 1981; 46 FR 42461, Aug. 21, 1981]

§ 52.232 Part D conditional approval.

(a) The following portions of the California SIP contain deficiencies with respect to Part D of the Clean Air Act which must be corrected by meeting the indicated conditions of Part D plan approval.

(1) [Reserved]

(2) North Central Coast Air Basin for ozone.

(i) By May 7, 1981, the NSR rules must be revised and submitted as an SIP revision. The rules must satisfy section 173 and 40 CFR 51.18, ''Review of new sources and modifications.'' In revising the Monterey Bay Unified APCD's NSR rules, the State/APCD must address (*a*) any new requirements in EPA's amended regulations for NSR under section 173 of the Clean Air Act (August 7, 1980, 45 FR 52676) which the APCD rules do not now satisfy and (*b*) those deficiencies with respect to the September 5, 1979 notice cited in EPA's Evaluation Report Addendum (contained in Document File NAP–CA–14 at the EPA Library in Washington, DC and the Region IX office).

(ii) By March 4, 1981, one of the following must be submitted as an SIP revision: (*a*) Adequate justification that the cutback asphalt rule represents RACT, (*b*) amendment of the cutback asphalt rule to conform with the controls recommended in the CTG document for cutback asphalt, or (*c*) adequate documentation that the cutback asphalt rule will result in emission reductions which are within 5 percent of the reductions achievable with the controls recommended in the cutback asphalt CTG document.

(3) South Coast Air Basin.

(i)(A) By May 7, 1981, the NSR rules must be revised and submitted as an SIP revision. The rules must satisfy section 173 of the Clean Air Act and 40 CFR 51.18, ''Review of new sources and modifications.'' In revising the South Coast AQMD's NSR rules, the State/AQMD must address (*1*) any new requirements in EPA's amended regulations for NSR (45 FR 31307, May 13, 1980 and 45 FR 52676, August 7, 1980) which the AQMD rules do not currently satisfy and (*2*) those deficiencies cited in EPA's Evaluation Report Addendum which still apply despite EPA's new

NSR requirements (contained in Document File NAP–CA–9 at the EPA Library in Washington, DC and the Regional Office).

(4) San Diego Air Basin.

(i) For ozone, CO, TSP, and NO_2:

(A) By May 7, 1981, the NSR rules submitted on March 17, 1980 must be revised and submitted as an SIP revision. In revising the NSR rules, the State/APCD must address (*1*) any new requirements in EPA's amended regulations for NSR under section 173 of the Clean Air Act (May 13, 1980, 45 FR 31307; and August 7, 1980, 45 FR 52676) which the APCD rules do not currently satisfy and (*2*) the deficiencies cited in EPA's *Evaluation Report Addendum* which still apply despite EPA's new NSR requirements. The *Evaluation Report Addendum* is contained in document file NAP–CA–19 and available at the EPA Region IX Office and the EPA Library in Washington, DC

(5) The Kern County APCD.

(i) For PM:

(A) By November 19, 1981, the NSR rules must be revised and submitted as an SIP revision. The rules must satisfy section 173 of the Clean Air Act and 40 CFR Subpart I, ''Review of new sources and modifications.'' In revising Kern County's NSR rules, the State/APCD must address all the requirements in EPA's amended regulations for NSR (45 FR 31307, May 13, 1980 and 45 FR 52676, August 7, 1980) which the APCD rules do not currently satisfy including those deficiencies cited in EPA's Evaluation Report Addendum which still apply despite EPA's new NSR requirements (contained in document File NAP–CA–07 at the EPA Library in Washington, DC and the Regional Office).

(ii) [Reserved]

(6) [Reserved]

(7) San Francisco Bay Area Air Basin.

(i) For ozone and CO:

(A) By June 17, 1982, submittal of implementation commitments and schedules and additional commitments to provide annually the financial and personnel resources necessary to carry out the plan for transportation sources.

(8) [Reserved]

(9) The Santa Barbara County nonattainment areas.

(i) For O_3, TSP, and CO by (90 days from the date of publication of this notice).

(A) The new source review (NSR) rules must be revised to meet the requirements in EPA's amended regulations for NSR under section 173 of the Clean Air Act (45 FR 31307, May 13, 1980 and 45 FR 52676, August 7, 1980) and submitted as an SIP revision.

(ii) For O_3 by (90 days from the date of publication of this notice), a revised cutback asphalt paving materials rule which does not allow for indefinite compliance date extensions and submitted as an SIP revision.

(10)–(11) [Reserved]

(12) Butte, Sutter and Yuba County APCDs.

(i) For Ozone:

(A) By August 2, 1982, the NSR rules for the counties discussed in this notice must be revised to meet the requirements in EPA's amended regulations for NSR under section 173 of the Clean Air Act (May 13, 1980, 45 FR 31307 and August 7, 1980, 45 FR 52676).

(13) Los Angeles and Riverside portions of the Southeast Desert Air Basin.

(i) For Ozone:

(A) By August 9, 1982, the new source review rules for the three county areas must be revised to meet the requirements in EPA's amended regulations under section 173 (May 13, 1980, (45 FR 31307), August 7, 1980, (45 FR 52676), and October 14, 1981, (46 FR 50766)).

(B) By August 9, 1982, the State must provide adopted regulations for degreasing operations in the Los Angeles County portion of the SEDAB which represent RACT.

(14)–(15) [Reserved]

(16) San Bernardino County portion of the Southeast Desert Air Basin.

(i) For ozone:

(A) By October 30, 1985, the NSR rules must be revised to meet the requirements in EPA's amended regulations for NSR under section 173 of the Clean Air Act (May 13, 1980 (45 FR 31307), August 7, 1980 (45 FR 52676), and October 14, 1981 (46 FR 50766)).

(17) Yolo and Solano Counties.

(i) For ozone and CO in those portions of Yolo and Solano Counties that are part of the Sacramento Metropolitan Area:

(A) By October 30, 1985, the NSR rules must be revised to meet the requirements in EPA's amended regulations for NSR under section 173 of the Clean Air Act (May 13, 1980 (45 FR 31307), August 7, 1980 (45 FR 52676), and October 14, 1981 (46 FR 50766)).

(ii) For ozone:

By November 1, 1982, the State must provide either (A) an adequate demonstration that the following regulations represent RACT, (B) amend the regulations so that they are consistent with the CTG, or (C) demonstrate that the regulations will result in VOC emission reductions which are within five percent of the reductions which would be achieved through the implementation of the CTG recommendations:

Yolo-Solano County APCD

Rule 2.24, ''Solvent Cleaning Operations (Degreasing).''

[45 FR 74485, Nov. 10, 1980]

EDITORIAL NOTE: For FEDERAL REGISTER citations affecting § 52.232, see the List of CFR Sections Affected, which appears in the Finding Aids section of the printed volume and at *www.fdsys.gov*.

§ 52.233 Review of new sources and modifications.

(a) The following regulations are disapproved because they are not consistent with Clean Air Act requirements.

(1) [Reserved]

(2) Monterey Bay Unified APCD.

(i) Subparagraph B.5. of Rule 207, *Standards for Permit to Construct*, submitted March 17, 1980.

(3) South Coast AQMD.

(i) In Rule 1306(a)(i), submitted on April 3, 1980, sentence 3 is disapproved.

(ii) In Rule 1306(d)(1)(B)(ii), submitted on April 3, 1980, the following portion of the rule is disapproved: ''Which have occurred during the highest three years of the last five year period, divided by three, provided the applicant demonstrates that such permit units have been operated at least 90 days during each of such three years.''

(iii) In Rule 1307(a) submitted on April 3, 1980, the following portion of the rule is disapproved: ''Greater than 68 kilograms (150 pounds) per day except carbon monoxide, for which the value is an increase greater than 340 kilograms (750 pounds) per day.''

(4) Kern County APCD.

(i) Those portions of paragraph (3)(E) of Rule 210.1, submitted on April 15, 1980, which allow new sources and modifications to be exempt from LAER.

(b) [Reserved]

(c) The requirements of § 51.160(a) of this chapter are not met in the following Air Pollution Control Districts since the regulations of the APCD's do not provide the means to prevent construction of sources which would violate applicable portions of the control strategy or would interfere with the attainment or maintenance of a national standard.

(1) Mariposa County APCD.

(2) Santa Barbara County APCD.

(d) The requirements of § 51.160(a) of this chapter are not met in the following Air Pollution Control Districts since the regulations of the APCD's do not include a means to prevent construction or modification if such construction or modification would interfere with the attainment or maintenance of a national standard.

(1) Amador County APCD.

(2) Calaveras County APCD.

(3) El Dorado County APCD (Mountain Counties Intrastate portion).

(4) [Reserved]

(5) Glenn County APCD.

(6) Humboldt County APCD.

(7)–(8) [Reserved]

(9) Lake County APCD.

(10) Lassen County APCD.

(11) [Reserved]

(12) [Reserved]

(13) [Reserved]

(14) Modoc County APCD.

(15) Monterey Bay Unified APCD.

(16) Nevada County APCD.

(17) [Reserved]

(18) [Reserved]

(19) Plumas County APCD.

(20) [Reserved]

(21) Shasta County APCD.

(22) Sierra County APCD.

(23) Siskiyou County APCD.

(24) [Reserved]

(25) Sutter County APCD.

(26) [Reserved]

(27) Tuolumne County APCD.

(e) [Reserved]

(f) *Regulation for review of new sources and modifications.* (1) The requirements of this paragraph are applicable to:

(i) Any stationary source in the APCD's listed below, the construction or modification of which is commenced after the effective date of this regulation.

(*a*) Mariposa County APCD.

(*b*) [Reserved]

(*c*) Santa Barbara County APCD.

(ii) Any stationary source subject to the requirements of §§ 52.226(c), 52.227(c), 52.228(b), or 52.230(b), the construction or modification of which is commenced after the effective date of this regulation.

(2) No owner or operator shall commence construction or modification of a stationary source after the effective date of this regulation without first obtaining approval from the Administrator of the location and design of such source.

(i) Application for approval to construct or modify shall be made on forms furnished by the Administrator, or by other means prescribed by the Administrator.

(ii) A separate application is required for each source.

(iii) Each application shall be signed by the applicant.

(iv) Each application shall be accompanied by site information, plans, descriptions, specifications, and drawings showing the design of the source, the nature and amount of emissions, and the manner in which it will be operated and controlled.

(v) Any additional information, plans, specifications, evidence, or documentation that the Administrator may require shall be furnished upon request.

(3) No approval to construct or modify will be granted unless the applicant shows to the satisfaction of the Administrator that:

(i) The source will be operated without causing a violation of any local, State, or Federal regulations which are part of the applicable plan.

(ii) The source will not prevent or interfere with attainment or maintenance of any national standard.

(4) (i) Within twenty (20) days after receipt of an application to construct, or any addition to such application, the Administrator shall advise the owner or operator of any deficiency in the information submitted in support of the application. In the event of such a deficiency, the date of receipt of the application for the purpose of paragraph (f)(4)(ii) of this section, shall be the date on which all required information is received by the Administrator.

(ii) Within thirty (30) days after receipt of a complete application, the Administrator shall:

(*a*) Make a preliminary determination whether the source should be approved, approved with conditions, or disapproved.

(*b*) Make available in at least one location in each region in which the proposed source would be constructed, a copy of all materials submitted by the owner or operator, a copy of the Administrator's preliminary determination and a copy or summary of other materials, if any, considered by the Administrator in making his preliminary determination; and

(*c*) Notify the public, by prominent advertisement in a newspaper of general circulation in each region in which the proposed source would be constructed, of the opportunity for written public comment on the information submitted by the owner or operator and the Administrator's preliminary determination on the approvability of the source.

(iii) A copy of the notice required pursuant to this paragraph shall be sent to the applicant and to state and local air pollution control agencies, having cognizance over the location where the source will be situated.

(iv) Public comments submitted in writing within thirty (30) days after the date such information is made available shall be considered by the Administrator in making his final decision on the application. No later than ten (10) days after the close of the public comment period, the applicant may submit a written response to any comment submitted by the public. The Administrator shall consider the applicant's response in making his final decision. All comments shall be made available for public inspection in at least one location in the region in which the source would be located.

(v) The Administrator shall take final action on the application within

thirty (30) days after the close of the public comment period. The Administrator shall notify the applicant in writing of his approval, conditional approval, or denial of the application, and shall set forth his reasons for ocnditional approval or denial. Such notification shall be made available for public inspection in at least one location in the region in which the source would be located.

(vi) The Administrator may extend each of the time periods specified in paragraph (f)(4)(ii), (iv) or (v) of this section by no more than 30 days, or such other period as agreed to by the applicant and the Administrator.

(5) The Administrator may impose any reasonable conditions upon an approval, including conditions requiring the source to be provided with:

(i) Sampling ports of a size, number, and location as the Administrator may require,

(ii) Safe access to each port,

(iii) Instrumentation to monitor and record emission data, and

(iv) Any other sampling and testing facilities.

(6) The Administrator may cancel an approval if the construction is not begun within 2 years from the date of issuance, or if during the construction, work is suspended for 1 year.

(7) Any owner or operator subject to the provisions of this regulation shall furnish the Administrator written notification as follows:

(i) A notification of the anticipated date or initial startup of the source not more than 60 days or less than 30 days prior to such date.

(ii) A notification of the actual date of initial startup of the source within 15 days after such date.

(8) Within 60 days after achieving the maximum production rate at which the source will be operated but not later than 180 days after initial startup of such source the owner or operator of such source shall conduct a performance test(s) in accordance with methods and under operating conditions approved by the Administrator and furnish the Administrator a written report of the results of such performance test.

(i) Such test shall be at the expense of the owner or operator.

(ii) The Administrator may monitor such test and may also conduct performance tests.

(iii) The owner or operator of a source shall provide the Administrator 15 days prior notice of the performance test to afford the Administrator the opportunity to have an observer present.

(iv) The Administrator may waive the requirement for performance tests if the owner or operator of a source has demonstrated by other means to the Administrator's satisfaction that the source is being operated in compliance with all local, State and Federal regulations which are part of the applicable plan.

(9) Approval to construct or modify shall not be required for:

(i) The installation or alteration of an air pollutant detector, air pollutants recorder, combustion controller, or combustion shutoff.

(ii) Air-conditioning or ventilating systems not designed to remove air pollutants generated by or released from equipment.

(iii) Fuel burning equipment, other than smokehouse generators which has a heat input of not more than 250 MBtu/h (62.5 billion g-cal/h) and burns only gaseous fuel containing not more than 0.5 grain H_2 S per 100 stdft^3 (5.7 g/100 stdm^3); has a heat input of not more than 1 MBtu/h (250 Mg-cal/h) and burns only distillate oil; or has a heat input of not more than 350,000 Btu/h (88.2 Mg-cal/h) and burns any other fuel.

(iv) Mobile internal combustion engines.

(v) Laboratory equipment used exclusively for chemical or physical analyses.

(vi) Other sources of minor significance specified by the Administrator.

(10) Approval to construct or modify shall not relieve any person of the responsibility to comply with any local, State, or Federal regulation which is part of the applicable plan.

(11) Any owner or operator who constructs, modifies, or operates a stationary source not in accordance with the application, as approved and conditioned by the Administrator, or any owner or operator of a stationary source subject to this paragraph who

commences construction or modification without applying for any receiving approval hereunder, shall be subject to enforcement action under section 113 of the Act.

(g) *Regulation for review of new sources and modifications.* (1) The requirements of this paragraph are applicable to any stationary source in the APCD's listed below, the construction or modification of which is commenced after the effective date of this regulation.

(i) Amador County APCD.

(ii) Calaveras County APCD.

(iii) El Dorado County APCD (Mountain Counties Intrastate portion).

(iv) [Reserved]

(v) Glenn County APCD.

(vi) Humboldt County APCD.

(vii)–(viii) [Reserved]

(ix) Lassen County APCD.

(x) Madera County APCD.

(xi) Mendocino County APCD.

(xii) Merced County APCD.

(xiii) Modoc County APCD.

(xiv) Monterey Bay Unified APCD.

(xv) Nevada County APCD.

(xvi) [Reserved]

(xvii) Plumas County APCD.

(xviii) San Joaquin County APCD.

(xix) Shasta County APCD.

(xx) Sierra County APCD.

(xxi) Siskiyou County APCD.

(xxii) Stanislaus County APCD.

(xxiii) Sutter County APCD.

(xxiv) Tulare County APCD.

(xxv) Tuolumne County APCD.

(2) No owner or operator shall commence construction or modification of any new source after the effective date of this regulation without first obtaining approval from the Administrator of the location of such source.

(i) Application for approval to construct or modify shall be made on forms furnished by the Administrator, or by other means prescribed by the Administrator.

(ii) A separate application is required for each source.

(iii) Each application shall be signed by the applicant.

(iv) Each application shall be accompanied by site information, stack data, and the nature and amount of emissions. Such information shall be sufficient to enable the Administrator to make any determination pursuant to paragraph (g)(3) of this section.

(v) Any additional information, plans, specifications, evidence, or documentation that the Administrator may require shall be furnished upon request.

(3) No approval to construct or modify will be granted unless the applicant shows to the satisfaction of the Administrator that the source will not prevent or interfere with attainment or maintenance of any national standard.

(4) (i) Within twenty (20) days after receipt of an application to construct, or any addition to such application, the Administrator shall advise the owner or operator of any deficiency in the information submitted in support of the application. In the event of such a deficiency, the date of receipt of the application for the purpose of paragraph (g)(4)(ii) of this section, shall be the date on which all required information is received by the Administrator.

(ii) Within thirty (30) days after receipt of a complete application, the Administrator shall:

(*a*) Make a preliminary determination whether the source should be approved, approved with conditions, or disapproved.

(*b*) Make available in at least one location in each region in which the proposed source would be constructed, a copy of all materials submitted by the owner or operator, a copy of the Administrator's preliminary determination and a copy or summary of other materials, if any, considered by the Administrator in making his preliminary determination; and

(*c*) Notify the public, by prominent advertisement in a newspaper of general circulation in each region in which the proposed source would be constructed, of the opportunity for written public comment on the information submitted by the owner or operator and the Administrator's preliminary determination on the approvability of the source.

(iii) A copy of the notice required pursuant to this subparagraph shall be sent to the applicant and to state and local air pollution control agencies, having cognizance over the location where the source will be situated.

(iv) Public comments submitted in writing within thirty (30) days after the date such information is made available shall be considered by the

Administrator in making his final decision on the application. No later than ten (10) days after the close of the public comment period, the applicant may submit a written response to any comment submitted by the public. The Administrator shall consider the applicant's response in making his final decision. All comments shall be made available for public inspection in at least one location in the region in which the source would be located.

(v) The Administrator shall take final action on an application within thirty (30) days after the close of the public comment period. The Administrator shall notify the applicant in writing of his approval, conditional approval, or denial of the application, and shall set forth his reasons for conditional approval or denial. Such notification shall be made available for public inspection in at least one location in the region in which the source would be located.

(vi) The Administrator may extend each of the time periods specified in paragraph (g)(4) (ii), (iv) or (v) of this section by no more than 30 days, or such other period as agreed to by the applicant and the Administrator.

(5) The Administrator may cancel an approval if the construction is not begun within 2 years from the date of issuance, or if during the construction, work is suspended for 1 year.

(6) Approval to construct or modify shall not relieve any owner or operator of the responsibility to comply with any local, State, or Federal regulation which is part of the applicable plan.

(7) Approval to construct or modify shall not be required for:

(i) The installation or alteration of an air pollutant detector, air pollutants recorder, combustion controller, or combustion shutoff.

(ii) Air-conditioning or ventilating systems not designed to remove air pollutants generated by or released from equipment.

(iii) Fuel burning equipment, other than smokehouse generators, which has a heat input of not more than 250 MBtu/h (62.5 billion g-cal/h) and burns only gaseous fuel containing not more than 20.0 grain H_2 S per 100 stdft^3 (54.8 g/100 stdm^3); has a heat input of not more than 1 MBtu/h (250 Mg-cal/h) and burns only distillate oil; or has a heat input of not more than 350,000 Btu/h (88.2 Mg-cal/h) and burns any other fuel.

(iv) Mobile internal combustion engines.

(v) Laboratory equipment used exclusively for chemical or physical analyses.

(vi) Other sources of minor significance specified by the Administrator.

(8) Any owner or operator who constructs, modifies, or operates a stationary source not in accordance with the application, as approved and conditioned by the Administrator, or any owner or operator of a stationary source subject to this paragraph who commences construction or modification without applying for and receiving approval hereunder, shall be subject to enforcement action under section 113 of the Act.

(h)–(i) [Reserved]

(j) *Delegation of authority*. (1) The Administrator shall have the authority to delegate responsibility for implementing the procedures for conducting source review pursuant to this section in accordance with paragraphs (j) (2), (3), and (4) of this section.

(2) Where the Administrator delegates the responsibility for implementing the procedures for conducting source review pursuant to this section to any Agency, other than a Regional Office of the Environmental Protection Agency, a copy of the notice pursuant to paragraphs (f)(4)(iii) and (g)(4)(iii) of this section shall be sent to the Administrator through the appropriate Regional Office.

(3) In accordance with Executive Order 11752, the Administrator's authority for implementing the procedures for conducting source review pursuant to this section shall not be delegated, other than to a Regional Office of the Environmental Protection Ands; except that, with respect to the latter category, where new or modified sources are constructed or operated on Federal lands pursuant to leasing or other Federal agreements, the Federal Land Manager may at his discretion, to the extent permissible under applicable statutes and regulations, require the lessee or permittee to be subject to new source review requirements which have

been delegated to a state or local agency pursuant to this paragraph.

(4) The Administrator's authority for implementing the procedures for conducting source review pursuant to this section shall not be redelegated, other than to a Regional Office of the Environmental Protection Agency, for new or modified sources which are located in Indian reservations except where the State has assumed jurisdiction over such land under other laws, in which case the Administrator may delegate his authority to the States in accordance with paragraphs (j) (2), (3), and (4) of this section.

(k) *Conditions on steam production.* (1) Notwithstanding any provisions to the contrary in the California State Implementation Plan, the Watson petroleum refinery owned by Atlantic Richfield Company, located at 1801 East Sepulveda Boulevard, Carson, California, shall operate under the following conditions listed in paragraphs (k)(2) through (6) of this section.

(2) The total steam load comprised of the steam purchased from Watson Energy Systems and the amount generated by boilers #31, #32, #33, #42, #51, and #52 at the ARCO Watson Refinery shall not exceed 1,355,000 pounds per hour at 680 °F, 600 psig.

(3) Continuous written records of steam purchased from Watson Energy Systems and of the steam produced by boilers #31, #32, #42, #51, or #52 at the ARCO Watson Refinery, during receipt of steam from Watson Energy Systems, shall be maintained and made available for inspection by the EPA and the South Coast Air Quality Management District. These records shall be kept in terms of pounds per hour of steam at 680 °F, 600 psig.

(4) The steam purchased from the Watson Energy Systems facility shall be used as a ''first-on, last-off'' source of steam for the ARCO Watson Refinery, except for steam produced by waste heat or as part of the refining process, or as required to maintain fired boilers in service for emergency use.

(5) Any proposed changes in equipment or fuel that would increase the oil fired steam generating capacity or decrease oil fired steam generating efficiency of boilers #31, #32, #33, #42, #51, and #52 at the ARCO Watson Refinery must be reviewed and approved by the EPA prior to implementation of the proposed changes.

(6) ARCO shall maintain written records of oil consumption at boilers #31, #32, #33, #42, #51, and #52 during receipt of steam from Watson Energy Systems. These records shall be available for inspection by the South Coast Air Quality Management District and the EPA. The total oil consumption of these boilers shall not exceed a monthly average of 226,000 gallons per day when receiving steam from the Watson Energy systems plant at a rate of 350,000 pounds per hour. When receiving steam at a lower rate, ARCO shall be allowed to increase its boiler fuel oil consumption to achieve a total steam load not to exceed the limit of condition two (2).

(l) The following rules and regulations are disapproved because they do not meet the requirements of sections 110, 172, and 173 of the Clean Air Act, since they exempt certain source categories from the offset requirements of the Act:

(1) South Coast Air Quality Management District.

(i) Rule 1304(e), Resource Conservation and Energy Projects, submitted on April 3, 1980, but only with respect to projects whose application for a permit is complete after January 1, 1986,

(ii) Rule 1304(b)(2), Resource and Energy Conservation Projects, submitted on November 8, 1982, but only with respect to projects whose application for a permit is complete after January 1, 1986,

(m) Revised South Coast Regulation XIII, submitted on November 8, 1982, is not approved inasmuch as action on it is temporarily deferred.

[37 FR 19813, Sept. 22, 1972]

EDITORIAL NOTE: For FEDERAL REGISTER citations affecting § 52.233, see the List of CFR Sections Affected, which appears in the Finding Aids section of the printed volume and at *www.fdsys.gov*.

§ 52.234 Source surveillance.

(a) Except in the Air Pollution Control Districts (APCDs) listed in this paragraph, the requirements of § 51.211 of this chapter are not met since the plan does not provide for recordkeeping

and periodic reporting of emission data by sources.

(1) Amador County APCD.
(2) Bay Area AQMD.
(3) Calaveras County APCD.
(4) Del Norte County APCD.
(5) El Dorado County APCD.
(6) Humboldt County APCD.
(7) Imperial County APCD.
(8) Lake County APCD.
(9) Mariposa County APCD.
(10) Mendocino County APCD.
(11) Nevada County APCD.
(12) Northern Sonoma County APCD.
(13) Placer County APCD.
(14) Plumas County APCD.
(15) Sierra County APCD.
(16) Trinity County APCD.
(17) Ventura County APCD.

(b) The requirements of § 51.212 of this chapter are not met since the plan does not adequately provide for periodic testing and inspection of stationary sources within the Bay Area Air Pollution Control District portion of the San Francisco Bay Area Intrastate Region.

(c) The requirements of § 51.212 of this chapter are not met since the system for detecting violations through enforcement of visible emission regulations and complaint handling is not adequately described.

(d) *Regulation for source recordkeeping and reporting.* (1) The owner or operator of any stationary source in the State of California, except for those APCD's specified in paragraph (a) of this section, shall, upon notification from the Administrator, maintain records of the nature and amounts of emissions from such source and/or any other information as may be deemed necessary by the Administrator to determine whether such source is in compliance with applicable emission limitations or other control measures.

(2) The information recorded shall be summarized and reported to the Administrator, on forms furnished by the Administrator, and shall be submitted within 45 days after the end of the reporting period. Reporting periods are January 1 to June 30 and July 1 to December 31, except that the initial reporting period shall commence on the date the Administrator issues notification of the recordkeeping requirements.

(3) Information recorded by the owner or operator and copies of the summarizing reports submitted to the Administrator shall be retained by the owner or operator for 2 years after the date on which the pertinent report is submitted.

(e) The requirements of § 51.214 of this chapter are not met in the following air pollution control districts (APCD's) since all of the applicable requirements of Appendix P of part 51 are not included in the district regulations.

(1) Amador County APCD.
(2) Bay Area AQMD
(3) Calaveras County APCD.
(4) El Dorado County APCD.
(5) Imperial County APCD.
(6) Kern County APCD.
(7) Kings County APCD.
(8) Los Angeles County APCD.
(9) Mariposa County APCD.
(10) Monterey Bay Unified APCD.
(11) Nevada County APCD.
(12) Placer County APCD.
(13) Plumas County APCD.
(14) San Bernardino County Desert APCD.
(15) San Diego County APCD.
(16) San Joaquin County APCD.
(17) San Luis Obispo County APCD.
(18) Santa Barbara County APCD.
(19) Sierra County APCD.
(20) South Coast AQMD.
(21) Stanislaus County APCD.
(22) Tulare County APCD.
(23) Ventura County APCD.

[37 FR 10850, May 31, 1972]

EDITORIAL NOTE: For FEDERAL REGISTER citations affecting § 52.234, see the List of CFR Sections Affected, which appears in the Finding Aids section of the printed volume and at *www.fdsys.gov*.

§ 52.235 Control strategy for ozone: Oxides of nitrogen.

EPA is approving an exemption request submitted by the Monterey Bay Unified Air Pollution Control District on April 26, 1994 for the Monterey Bay ozone nonattainment area from the NO_X RACT requirements contained in section 182(f) of the Clean Air Act. This approval exempts the area from implementing the oxides of nitrogen (NO_X) requirements for reasonably available control technology (RACT), new source review (NSR), the related requirements

of general and transportation conformity regulations, and applicable inspection and maintenance (I/M). The exemption is based on ambient air monitoring data and lasts for only as long as the area's monitoring efforts continue to demonstrate attainment without NO_X reductions from major stationary sources.

[60 FR 20237, Apr. 25, 1995]

§ 52.236 Rules and regulations.

(a) Since the following Air Pollution Control District (APCD) rules do not define the term ''agricultural operations,'' the rules are disapproved because they could render certain emission limitations rules unenforceable.

(1) Imperial County APCD.

(i) Rule 114.5, submitted on November 10, 1976.

(ii) Rule 148.D(3), submitted on November 10, 1976.

(b) The following Air Pollution Control District (APCD) rules are disapproved because they contain the term ''agricultural operations'' and/or the term ''other equipment in agricultural operations,'' both of which are either undefined or inadequately defined, thus rendering certain emission control rules unenforceable:

(1) San Luis Obispo County APCD.

(i) Rules 401(B)(4) and 401(B)(6), submitted on November 10, 1976.

(2) Sacramento County APCD.

(i) Rule 7(b)(5), submitted on November 4, 1977.

(3) Glenn County APCD.

(i) Section 77(e), submitted on June 30, 1972, and previously approved under 40 CFR 52.223 (37 FR 19812).

(4) Mariposa County APCD.

(i) Rule 203(G), submitted on June 6, 1977.

(5) Kern County APCD.

(i) Rules 402(c) and 402(e), submitted on; November 10, 1976.

(6) Fresno County APCD.

(i) Rules 402(c) and 402(e), submitted on October 23, 1974.

(ii) Rules 402(c) and 402(e), submitted on June 30, 1972, and previously approved under 40 CFR 52.223 (37 FR 19812).

(7) Tulare County APCD.

(i) Section 402(c), submitted on November 10, 1976, and previously approved under 40 CFR 52.223 (42 FR 47556).

(8) Madera County APCD.

(i) Rules 402(c) and 402(e), submitted on January 10, 1975, and previously approved under 40 CFR 52.223 (42 FR 42219).

(9) Amador County APCD.

(i) Rules 203(G), submitted on October 15, 1979, and 205(G), submitted on June 30, 1972.

(c) Since the following Air Pollution Control Districts have deleted definitions which could allow a relaxation of emission limitations, the deletions are disapproved:

(1) Merced County APCD.

(i) Rule 102(hh), submitted on June 30, 1972, previously approved under 40 CFR 52.223, and deleted by the August 2, 1976 submittal, is retained.

(2) El Dorado County APCD.

(i) Rule 102(LL), submitted on November 4, 1977, previously approved at 43 FR 51632, and deleted by the May 23, 1979 submittal, is retained.

(d) The following rules or portions of rules are disapproved since they contain provisions which are inconsistent with 40 CFR part 58, Ambient Air Quality Surveillance.

(1) Lake County APCD.

(i) Section 224, *Equivalent Method*, and Table V, *Table of Standards, Applicable Statewide*, submitted on February 10, 1977.

(ii) Table V, *Concentrations and Methods*, submitted on January 2, 1979, and Table V, submitted on February 10, 1976 and previously approved at 42 FR 42224.

(e) Since the following air pollution control districts have revised definitions so as to render the associated emission control requirements less stringent without a control strategy demonstration, the revisions are disapproved.

(1) Mendocino County APCD.

(i) Rule 130(p4), submitted on November 10, 1976. (Part III–49, previously submitted on February 21, 1972, and approved in 40 CFR 52.223, is retained).

(ii) Rule 130(s3), submitted on November 10, 1976. (Part III–55, previously submitted on February 21, 1972, and approved in 40 CFR 52.233, is retained).

(2) Shasta County APCD.

(i) The definition of ''modification'' in Rule 1:2, *Definitions*, submitted on October 13, 1977, is disapproved.

(3) San Bernardino County Desert APCD.

(i) Rule 103, *Definition of Terms*, submitted on November 4, 1977, is disapproved with respect to the deletion of the following terms: ''Distilling type heater'', ''Noncomplying orchard heater'', ''Pipe line systems'', and ''Return stack heater''. (Rule 2, *Definitions*, submitted on February 21, 1972 and approved in 40 CFR 52.223, is retained for the above terms.)

(4) Southeast Desert Intrastate Region.

(i) San Bernardino County Desert APCD.

(A) Rule 102, *Definition of Terms*, submitted November 4, 1977 is disapproved with respect to the deletion of the following terms: Distilling type heater, Non-complying orchard heater, Pipe line systems, and Return stack heater. Rule 2, *Definitions*, submitted February 21, 1972 and approved in 40 CFR 52.223, is retained for the above terms.

(f) The following APCD rules are disapproved because they exempt some portions of the districts from the existing air pollution control regulations without setting forth substitute rules for the exempted areas.

(1) El Dorado County APCD.

(i) Rule 201, submitted on November 4, 1977, is disapproved. (The previously approved Rule 49, submitted on June 30, 1972, is retained for Federal enforcement purposes.)

(g) The following Air Pollution Control District (APCD) rules are disapproved pursuant to section 110(a)(2)(K) of the Clean Air Act because they could allow recovery of legal expenses associated with permit enforcement actions.

(1) Monterey Bay Unified APCD.

(i) Rule 300 (i)(1), *Permit Fee*, submitted on December 17, 1979.

(2) El Dorado County APCD.

(i) Rule 104, submitted on May 23, 1979.

[42 FR 39664, Aug. 5, 1977]

EDITORIAL NOTE: For FEDERAL REGISTER citations affecting § 52.236, see the List of CFR Sections Affected, which appears in the Finding Aids section of the printed volume and at *www.fdsys.gov*.

§ 52.237 Part D disapproval.

(a) The following portions of the California SIP are disapproved because they do not meet the requirements of Part D of the Clean Air Act.

(1) The ozone and CO attainment demonstrations for the South Coast Air Basin. No major stationary source, or major modification of a stationary source, of carbon monoxide or volatile organic compounds may be constructed in the South Coast Air Basin unless the construction permit application is complete on or before August 30, 1988.

(2) The ozone attainment demonstration for Ventura County. No major stationary source, or major modification of a stationary source, of volatile organic compounds may be constructed in the Ventura County nonattainment area unless the construction permit application is complete on or before November 4, 1988.

(3) The ozone attainment demonstration for the Sacramento AQMA. No major stationary source, or major modification of a stationary source, of volatile organic compounds may be constructed in the Sacramento nonattainment area unless the construction permit application is complete on or before January 3, 1989.

(4) The ozone attainment demonstration for the Fresno County APCD.

(5) The ozone attainment demonstration for the Kern County APCD.

(6) The attainment assessment, motor vehicle emissions budgets, and Reasonably Available Control Measure (RACM) portions of the San Francisco Bay Area Ozone Attainment Plan for the 1–Hour National Ozone Standard, June 1999.

(7) [Reserved]

(8) The contingency measure portion of the 2008 $PM_{2.5}$ Plan for attainment of the 1997 $PM_{2.5}$ standards in the San Joaquin Valley (June 2013).

(b) The following Reasonably Available Control Technology (RACT) determinations are disapproved because they do not meet the requirements of Part D of the Clean Air Act.

(1) Sacramento Air Quality Management District.

(i) RACT Determinations for the Pharmaceutical Products Manufacturing Source Category and the Kiefer Landfill (volatile organic compounds

only), in the submittal titled ''Reasonably Available Control Technology (RACT) as Applicable to the 8-Hour Ozone Standard,'' dated October 26, 2006, as adopted on October 26, 2006 and submitted on July 11, 2007.

(ii) [Reserved]

(2) [Reserved]

[46 FR 5979, Jan. 21, 1981, as amended at 48 FR 53118, Nov. 25, 1983; 50 FR 35798; Sept. 4, 1985; 53 FR 1781, Jan. 22, 1988; 53 FR 39088, Oct. 5, 1988; 53 FR 48537, Dec. 1, 1988; 55 FR 9878, 9880, Mar. 16, 1990; 56 FR 2853, Jan. 25, 1991; 66 FR 48347, Sept. 20, 2001; 81 FR 22032, Apr. 14, 2016; 81 FR 29501, May 12, 2016; 81 FR 53283, Aug. 12, 2016; 83 FR 5927, Feb. 12, 2018]

§ 52.238 Commitment to undertake rulemaking.

(a) The Administrator shall undertake rulemaking, after the South Coast mobile source public consultative process, to promulgate any VOC and NO_X mobile source controls which are determined to be appropriate for EPA and needed for ozone attainment in the Los Angeles-South Coast Air Basin Area.

(b) [Reserved]

[62 FR 1187, Jan. 8, 1997]

§ 52.239 Alternate compliance plans.

(a) Alternative compliance plans (bubble plans) developed under the District rules listed below must be submitted to EPA by the State of California as SIP revisions. The emission limits contained in the District rule will continue to be enforceable by EPA and private citizens under sections 113 and 304(a) of the Act until the alternative compliance plans are approved by EPA for inclusion in the SIP.

(1) Bay Area AQMD.

(i) Rule 4 of Regulation 8, submitted on February 7, 1980.

(b) Alternative compliance plans (bubble plans) developed under the District rules listed below are considered the applicable requirements in the SIP which are enforceable by EPA and private citizens under section 113 and 304(a) of the Act. Alternative compliance plans must be submitted to EPA after their approval by the District. The District rules do not apply to or supersede the conditions that a source must meet under nonattainment or PSD permit programs, new source performance standards, or national emission standards for hazardous air pollutants.

(1) Bay Area AQMD.

(i) Rules 11, 13 and 19 of Regulation 8, submitted on February 7, 1980.

[47 FR 11870, Mar. 19, 1982]

§ 52.240 Compliance schedules.

(a) The requirements of § 51.262(a) of this chapter are not met in the following Air Pollution Control Districts since the regulations cited do not provide increments to progress toward compliance.

(1) Rules 50–A, 52–A, 53–A(a), 53–A(b), 53–A(c), 53.2, 53.3, 54.A, 58.A, 62.1, 68, 69, 70, and 71 of the San Bernardino County APCD.

(2) Rules 53, 72.1, and 72.2 of the Riverside County APCD.

(3) Rules 53, 66.c, and 68.a of the Orange County APCD.

(4) Rule 39.1 of the Santa Barbara County APCD.

(5) Rule 59 of the Ventura County APCD.

(6) Rule 66(c) of the Los Angeles County APCD.

(7) Rule 4.5 of the Siskiyou County APCD.

(8) Rule 64(c) of the Northern Sonoma County APCD.

(9) Rule 409 of the Tulare County APCD.

(b) The requirements of § 51.261 are not met since Rule 68.a of the Orange County Air Pollution Control District does not provide for compliance within 3 years after the Administrator's approval of the plan.

(c) Federal compliance schedule. (1) Except as provided in paragraph (c)(2) of this section, the owner or operator of any stationary source subject to Rule 68.a of the Orange County Air Pollution Control District shall comply with such rule or regulation on or before January 31, 1974.

(i) Any owner or operator in compliance with this rule on the effective date of this regulation shall certify such compliance to the Administrator no later than 120 days following the effective date of this paragraph.

(ii) Any owner or operator who achieves compliance with such rule or regulation after the effective date of this regulation shall certify such compliance to the Administrator within 5

days of the date compliance is achieved.

(2) Any owner or operator of a stationary source subject to paragraph (c)(1) of this section may, not later than 120 days following the effective date of this paragraph, submit to the Administrator for approval a proposed compliance schedule that demonstrates compliance with the rules and regulations specified in paragraph (c)(1) of this section as expeditiously as practicable but no later than July 31, 1975. The compliance schedule shall provide for increments of progress toward compliance. The dates for achievement of such increments of progress shall be specified. Increments of progress shall include, but not be limited to: Submittal of final control plan to the Administrator; letting of necessary contracts for construction or process changes or issuance of orders for the purchase of component parts to accomplish emission control or process modification; initiation of onsite construction or installation of emission control equipment or process modification; completion of onsite construction or installation of emissioncontrol equipment or process modification; and final compliance.

(3) Any owner or operator who submits a compliance schedule pursuant to this paragraph shall, within 5 days after the deadline for each increment of progress, certify to the Administrator whether or not the required increment of the approved compliance schedule has been met.

(d) Regulation for increments of progress. (1) The requirements of this paragraph are applicable to any stationary source in the following Air Pollution Control Districts subject to the indicated regulations.

(i) Rules 50–A, 52–A, 53–A(a), 53–A(b), 53–A(c), 53.2, 53.3, 54.A, 58.A, 62.1, 68, 69, 70, and 71 of the San Bernardino County APCD.

(ii) Rules 53, 72.1, and 72.2 of the Riverside County APCD.

(iii) Rules 53 and 66.c of the Orange County APCD.

(iv) Rule 39.1 of the Santa Barbara County APCD.

(v) Rule 59 of the Ventura County APCD.

(vi) Rules 66(c) and 68 of the Los Angeles County APCD.

(vii) Rule 4.5 of the Siskiyou County APCD.

(viii) Rule 64(c) of the Northern Sonoma County APCD.

(ix) Rule 409 of the Tulare County APCD.

(2) Except as provided in paragraph (3) of this section, the owner or operator of any stationary source shall, no later than 120 days following the effective date of this paragraph, submit to the Administrator for approval, a proposed compliance schedule that demonstrates compliance with the applicable regulations as expeditiously as practicable but no later than the final compliance date specified by such applicable regulation. The compliance schedule shall provide for periodic increments of progress toward compliance. The dates for achievement of such increments shall be specified. Increments of progress shall include, but not be limited to: Submittal of final control plan to the Administrator; letting of necessary contracts for construction or process changes or issuance of orders for the purchase of component parts to accomplish emission control or process modification; initiation of onsite construction or installation of emission control equipment or process modification; completion of onsite construction or installation of emission control equipment or process modification; and final compliance.

(3) Where any such owner or operator demonstrates to the satisfaction of the Administrator that compliance with the applicable regulations will be achieved on or before January 31, 1974, no compliance schedule shall be required.

(4) Any owner or operator who submits a compliance schedule pursuant to this paragraph shall, within 5 days after the deadline for each increment of progress, certify to the Administrator whether or not the required increment of the approved compliance schedule has been met.

(5) Any compliance schedule adopted by the State and approved by the Administrator shall satisfy the requirements of this paragraph for the affected source.

(e) [Reserved]

(f) State compliance schedules. (1) [Reserved]

(2) The compliance schedules for the sources identified below are disapproved as not meeting the requirements of Subpart N of this chapter. All regulations cited are air pollution control regulations of the county in which the source is located, unless otherwise indicated.

Source	Location (county)	Rule or regulation involved	Date of adoption	Effective date	Final compliance date
Simpson Lee Paper Co. (Order No. 72–V–7)	Shasta ..	3.2	Oct. 31, 1973.	Immediately	Jan. 15, 1976.
Monolith Portland Cement Co. (Order No. 73–6 as amended Mar. 11, 1974).	Kern	401(b), 404.1, 406 ..	Dec. 31, 1973.	.....do	July 1, 1976.

[37 FR 19814, Sept. 22, 1972]

EDITORIAL NOTE: For FEDERAL REGISTER citations affecting § 52.240, see the List of CFR Sections Affected, which appears in the Finding Aids section of the printed volume and at *www.fdsys.gov*.

§ 52.241 Inspection and maintenance program.

(a) [Reserved]

(b) *Approval*. On June 5, 2009, the California Air Resources Board submitted a revision to the California Motor Vehicle Inspection and Maintenance Program (2009 I/M Revision) to satisfy the requirements for basic and enhanced motor vehicle inspection and maintenance (I/M) in applicable ozone nonattainment areas. On October 28, 2009, the California Air Resources Board amended the 2009 I/M Revision to include revised enhanced performance program evaluations for six nonattainment areas. Approved elements of the 2009 I/M Revision, as amended on October 28, 2009, include a discussion of each of the required design elements of the I/M program; description of the current geographic coverage of the program; I/M-related statutes and regulations; enhanced I/M performance standard evaluations for the urbanized areas within six California ozone nonattainment areas (South Coast Air Basin, San Joaquin Valley, Sacramento Metro, Coachella Valley, Ventura County, and Western Mojave Desert); basic I/M performance standard evaluation for the urbanized area within the San Francisco Bay Area ozone nonattainment area; and emission analyzer specifications and test procedures, including BAR–97 specifications. The 2009 I/M Revision, as amended on October 28, 2009, meets the requirements of sections 182(a)(2)(B) and 182(c)(3) of the Clean Air Act, as amended in 1990, and 40 CFR part 51, subpart S and is approved as a revision to the California State Implementation Plan.

[75 FR 38026, July 1, 2010]

§ 52.242 Disapproved rules and regulations.

(a) The following Air Pollution Control District rules are disapproved because they do not meet the requirements of section 110 of the Clean Air Act.

(1) South Coast Air Quality Management District.

(i) Rule 1623, Credits for Lawn and Garden Equipment, submitted on August 28, 1996 and adopted on May 10, 1996.

(ii) Rule 118, Emergencies, submitted on May 21, 1998.

(iii) Rule 1175, ''Control of Emissions from the Manufacturing of Polymeric Cellular (Foam) Products,'' submitted on March 7, 2008 and adopted on September 7, 2007.

(iv) Rule 511.1, ''Subpoenas,'' submitted on February 7, 1989.

(v) Rule 503.1, ''Ex Parte Petitions for Variances,'' submitted on February 7, 1989.

(vi) Rule 504, ''Rules from which Variances Are Not Allowed,'' submitted on May 13, 1991.

(vii) Rule 1610, ''Old-Vehicle Scrapping,'' submitted on June 3, 1997.

(viii) Rule 2202, ''On-Road Motor Vehicle Mitigation Options,'' submitted on June 3, 1999.

(2) Antelope Valley Air Pollution Control District.

(i) Rule 118, Emergencies, submitted on March 10, 1998.

(3) Imperial County Air Pollution Control District.

(i) Rule 401, Opacity of Emissions submitted on May 26, 2000. Rule 401 submitted on June 9, 1987, is retained.

(4) San Joaquin Valley Unified Air Pollution Control District.

(i) Rule 4101, Visible Emissions, submitted on December 6, 2001 and adopted on November 15, 2001.

(5) Kern County Air Pollution Control District.

(i) Rule 203, Transfer, submitted on July 23, 1996 and amended on May 2, 1996. Rule 203, submitted on June 30, 1972, is retained.

(6) Monterey Bay Unified Air Pollution Control District

(i) Rule 400, Visible Emissions, submitted on March 7, 2008. Rule 400 submitted on January 15, 2004, is retained.

[65 FR 10717, Feb. 29, 2000, as amended at 66 FR 49297, Sept. 27, 2001; 67 FR 62385, Oct. 7, 2002; 69 FR 1273, Jan. 8, 2004; 72 FR 63110, Nov. 8, 2007; 75 FR 25778, May 10, 2010; 75 FR 37730, June 30, 2010; 81 FR 4891, Jan. 28, 2016]

§ 52.243 Interim approval of the Carbon Monoxide plan for the South Coast.

The Carbon Monoxide plan for the Los Angeles-South Coast Air Basin is approved as meeting the provisions of sections 171(1), 172(c)(2), and 187(a)(7) for quantitative milestones and reasonable further progress, and the provisions of section 187(a)(7) for attainment demonstration. This approval expires on August 7, 1998, or earlier if by such earlier date the State has submitted as a SIP revision a demonstration that the carbon monoxide emission reduction credits for the enhanced motor vehicle inspection and maintenance program are appropriate and that the program is otherwise in compliance with the Clean Air Act and EPA takes final action approving that revision, as provided by section 348(c) of the National Highway System Designation Act (Public Law 104–59).

[63 FR 19662, Apr. 21, 1998]

§ 52.244 Motor vehicle emissions budgets.

(a) Approval of the motor vehicle emissions budgets for the following ozone rate-of-progress and attainment SIPs will apply for transportation conformity purposes only until new budgets based on updated planning data and models have been submitted and EPA has found the budgets to be adequate for conformity purposes.

(1) Antelope Valley, approved January 8, 1997;

(2) Coachella, approved January 8, 1997;

(3) Kern, approved January 8, 1997;

(4) Mojave, approved January 8, 1997;

(5) Sacramento, approved January 8, 1997;

(6) South Coast, approved April 10, 2000;

(7) Ventura, approved January 8, 1997.

(b) Approval of the motor vehicle emissions budgets for the following ozone maintenance SIP will apply for transportation conformity purposes only until new budgets based on updated planning data and models have been submitted and EPA has found the budgets to be adequate for conformity purposes.

(1) Monterey, approved January 17, 1997.

(2) [Reserved]

(c) Approval of the motor vehicle emissions budgets for the following carbon monoxide maintenance SIPs will apply for transportation conformity purposes only until new budgets based on updated planning data and models have been submitted and EPA has found the budgets to be adequate for conformity purposes.

(1) Bakersfield, approved March 31, 1998;

(2) Chico, approved March 31, 1998;

(3) Fresno, approved March 31, 1998;

(4) Lake Tahoe-North, approved March 31, 1998;

(5) Lake Tahoe-South, approved March 31, 1998;

(6) Modesto, approved March 31, 1998;

(7) Sacramento, approved March 31, 1998;

(8) San Diego, approved March 31, 1998;

(9) San Francisco Bay Area, approved March 31, 1998;

(10) Stockton, approved March 31, 1998.

(d) Approval of the motor vehicle emissions budgets for the following nitrogen dioxide maintenance SIP will apply for transportation conformity purposes only until new budgets based on updated planning data and models have been submitted and EPA has found the budgets to be adequate for conformity purposes.

(1) South Coast, approved on July 24, 1998.

(2) [Reserved]

(e) Approval of the motor vehicle emissions budgets for the following PM–10 reasonable further progress and attainment SIPs will apply for transportation conformity purposes only until new budgets based on updated planning data and models have been submitted and EPA has found the budgets to be adequate for conformity purposes.

(1) South Coast, approved April 18, 2003.

(2) Coachella Valley, approved April 18, 2003.

[67 FR 69146, Nov. 15, 2002, as amended at 68 FR 19317, 19319, Apr. 18, 2003]

§52.245 New Source Review rules.

(a) Approval of the New Source Review rules for the San Joaquin Valley Unified Air Pollution Control District Rules 2020 and 2201 as approved on May 17, 2004 in §52.220(c)(311)(i)(B)(*1*), and in effect for Federal purposes from June 16, 2004 through June 10, 2010, is limited, as it relates to agricultural sources, to the extent that the permit requirements apply:

(1) To agricultural sources with potential emissions at or above a major source applicability threshold; and

(2) To agricultural sources with actual emissions at or above 50 percent of a major source applicability threshold.

(b) Approval of the New Source Review rules for the San Joaquin Valley Unified Air Pollution Control District Rules 2020 and 2201 as approved on May 17, 2004 in §52.220(c)(311)(i)(B)(*1*), and in effect for Federal purposes from June 16, 2004 through June 10, 2010, is limited, as it relates to agricultural sources, to the extent that the emission offset requirements apply to major agricultural sources and major modifications of such sources.

(c) By May 7, 2016, the New Source Review rules for $PM_{2.5}$ for the San Joaquin Valley Unified Air Pollution Control District must be revised and submitted as a SIP revision. The rules must satisfy the requirements of sections 189(b)(3) and 189(e) and all other applicable requirements of the Clean Air Act for implementation of the 1997 $PM_{2.5}$ NAAQS.

(d) By August 14, 2017, the New Source Review rules for $PM_{2.5}$ for the South Coast Air Quality Management District must be revised and submitted as a SIP revision. The rules must satisfy the requirements of sections 189(b)(3) and 189(e) and all other applicable requirements of the Clean Air Act for implementation of the 2006 $PM_{2.5}$ NAAQS.

(e) By February 21, 2017, the New Source Review rules for $PM_{2.5}$ for the San Joaquin Valley Unified Air Pollution Control District must be revised and submitted as a SIP revision. The rules must satisfy the requirements of sections 189(b)(3) and 189(e) and all other applicable requirements of the Clean Air Act for implementation of the 2006 $PM_{2.5}$ NAAQS.

[78 FR 46514, Aug. 1, 2013, as amended at 80 FR 18533, Apr. 7, 2015; 81 FR 1520, Jan. 13, 2016; 81 FR 3000, Jan. 20, 2016]

§52.246 Control of dry cleaning solvent vapor losses.

(a) For the purpose of this section, ''dry cleaning operation'' means that process by which an organic solvent is used in the commercial cleaning of garments and other fabric materials.

(b) This section is applicable in the Metropolitan Los Angeles, Sacramento Valley, and San Joaquin Valley Intrastate Air Quality Control Regions (the ''Regions''), as described in 40 CFR part 81, dated July 1, 1979, except as follows:

(1) In the following portions of the Sacramento Valley Region, this section is rescinded:

(i) Sacramento County APCD.

(ii) Placer County APCD (Mountain Counties Air Basin portion).

(iii) Yuba County APCD.

(iv) Sutter County APCD.

(2) In the following portions of the Metropolitan Los Angeles Intrastate Region, this section is rescinded:

(i) Ventura County APCD.

(3) In the following portions of the San Joaquin Valley Intrastate Region, this section is rescinded:

(i) San Joaquin County APCD.

(ii) Stanislaus County APCD.

(iii) Tulare County APCD.

(iv) Fresno County APCD.

(c) Any dry cleaning establishment that uses solvents containing 4 percent or more by volume of any reactive organic material listed under paragraphs (k) (1), (2), and (3) of § 52.254 except perchloroethylene or any saturated halogenated hydrocarbon shall reduce the emissions of the discharged organics by 90 percent by use of activated carbon adsorption, or other appropriate means, not later than January 1, 1975.

(d) If incineration is used as a control technique, 90 percent or more of the carbon in the organic compounds being incinerated must be oxidized to carbon dioxide.

[38 FR 31246, Nov. 12, 1973, as amended at 42 FR 41122, Aug. 15, 1977; 42 FR 42226, Aug. 22, 1977; 47 FR 15586, Apr. 12, 1982; 47 FR 18856, May 3, 1982; 47 FR 26385, June 18, 1982; 47 FR 28622, July 1, 1982; 47 FR 29670, July 8, 1982; 47 FR 50865, Nov. 10, 1982]

§ 52.247 Control Strategy and regulations: Fine Particle Matter.

(a) *Determination of Attainment:* Effective February 8, 2013, EPA has determined that, based on 2009 to 2011 ambient air quality data, the San Francisco Bay Area $PM_{2.5}$ nonattainment area has attained the 2006 24-hour $PM_{2.5}$ NAAQS. This determination suspends the requirements for this area to submit an attainment demonstration, associated reasonably available control measures, a reasonable further progress plan, contingency measures, and other planning SIPs related to attainment for as long as this area continues to attain the 2006 24-hour $PM_{2.5}$ NAAQS. If EPA determines, after notice-and-comment rulemaking, that this area no longer meets the 2006 $PM_{2.5}$ NAAQS, the corresponding determination of attainment for that area shall be withdrawn.

(b) *Determination of Attainment:* Effective February 11, 2013, EPA has determined that, based on 2009 to 2011 ambient air quality data, the Yuba City-Marysville $PM_{2.5}$ nonattainment area has attained the 2006 24-hour $PM_{2.5}$ NAAQS. This determination suspends the requirements for this area to submit an attainment demonstration, associated reasonably available control measures, a reasonable further progress plan, contingency measures, and other planning SIPs related to attainment for as long as this area continues to attain the 2006 24-hour $PM_{2.5}$ NAAQS. If EPA determines, after notice-and-comment rulemaking, that this area no longer meets the 2006 $PM_{2.5}$ NAAQS, the corresponding determination of attainment for that area shall be withdrawn.

(c) *Determination of Attainment:* Effective August 14, 2013, EPA has determined that, based on 2010 to 2012 ambient air quality data, the Sacramento $PM_{2.5}$ nonattainment area has attained the 2006 24-hour $PM_{2.5}$ NAAQS. This determination suspends the requirements for this area to submit an attainment demonstration, associated reasonably available control measures, a reasonable further progress plan, contingency measures, and other planning SIPs related to attainment for as long as this area continues to attain the 2006 24-hour $PM_{2.5}$ NAAQS. If EPA determines, after notice-and-comment rulemaking, that this area no longer meets the 2006 24-hour $PM_{2.5}$ NAAQS, the corresponding determination of attainment for that area shall be withdrawn.

(d) *Determination of Attainment:* Effective October 10, 2013, EPA has determined that, based on 2010 to 2012 ambient air quality data, the Chico $PM_{2.5}$ nonattainment area has attained the 2006 24-hour $PM_{2.5}$ NAAQS. This determination suspends the requirements for this area to submit an attainment demonstration, associated reasonably available control measures, a reasonable further progress plan, contingency measures, and other planning SIPs related to attainment for as long as this area continues to attain the 2006 24-hour $PM_{2.5}$ NAAQS. If EPA determines, after notice-and-comment rulemaking, that this area no longer meets the 2006

24-hour $PM_{2.5}$ NAAQS, the corresponding determination of attainment for that area shall be withdrawn.

(e) By August 14, 2017, California must adopt and submit a Serious Area plan to provide for attainment of the 2006 $PM_{2.5}$ NAAQS in the South Coast $PM_{2.5}$ nonattainment area. The Serious Area plan must include emissions inventories, an attainment demonstration, best available control measures, a reasonable further progress plan, quantitative milestones, contingency measures, and such other measures as may be necessary or appropriate to provide for attainment of the 2006 $PM_{2.5}$ NAAQS by the applicable attainment date, in accordance with the requirements of subparts 1 and 4 of part D, title I of the Clean Air Act.

(f) By August 21, 2017, California must adopt and submit a Serious Area plan to provide for attainment of the 2006 $PM_{2.5}$ NAAQS in the San Joaquin Valley $PM_{2.5}$ nonattainment area. The Serious Area plan must include emissions inventories, an attainment demonstration, best available control measures, a reasonable further progress plan, quantitative milestones, contingency measures, and such other measures as may be necessary or appropriate to provide for attainment of the 2006 $PM_{2.5}$ NAAQS by the applicable attainment date, in accordance with the requirements of subparts 1 and 4 of part D, title I of the Clean Air Act.

(g) *Determination of Attainment:* Effective August 24, 2016, the EPA has determined that, based on 2011 to 2013 ambient air quality data, the South Coast $PM_{2.5}$ nonattainment area has attained the 1997 annual and 24-hour $PM_{2.5}$ NAAQS. This determination suspends the requirements for this area to submit an attainment demonstration, associated reasonably available control measures, a reasonable further progress plan, contingency measures and other planning SIPs related to attainment for as long as this area continues to attain the 1997 annual and 24-hour $PM_{2.5}$ NAAQS. If the EPA determines, after notice-and-comment rulemaking, that this area no longer meets the 1997 $PM_{2.5}$ NAAQS, the corresponding determination of attainment for the area shall be withdrawn.

(h) *Determination of Failure to Attain:* Effective December 23, 2016, the EPA has determined that the San Joaquin Valley Serious $PM_{2.5}$ nonattainment area failed to attain the 1997 annual and 24-hour $PM_{2.5}$ NAAQS by the applicable attainment date of December 31, 2015. This determination triggers the requirements of CAA sections 179(d) and 189(d) for the State of California to submit a revision to the California SIP for the San Joaquin Valley to the EPA by December 31, 2016. The SIP revision must, among other elements, demonstrate expeditious attainment of the 1997 $PM_{2.5}$ NAAQS within the time period provided under CAA section 179(d) and that provides for annual reduction in the emissions of direct $PM_{2.5}$ or a $PM_{2.5}$ plan precursor pollutant within the area of not less than five percent until attainment.

(i) *Determination of attainment.* Effective May 12, 2017, EPA has determined that, based on 2013 to 2015 ambient air quality data, the Imperial County $PM_{2.5}$ nonattainment area has attained the 2006 24-hour $PM_{2.5}$ NAAQS. Under the provisions of EPA's $PM_{2.5}$ implementation rule (see 40 CFR 51.1015), this determination suspends the requirements for this area to submit an attainment demonstration, associated reasonably available control measures, a reasonable further progress plan, contingency measures, and other planning SIPs related to attainment for as long as this area continues to attain the 2006 24-hour $PM_{2.5}$ NAAQS. If EPA determines, after notice-and-comment rulemaking, that this area no longer meets the 2006 24-hour $PM_{2.5}$ NAAQS, the corresponding determination of attainment for that area shall be withdrawn.

(j) *Determination of attainment.* Effective June 9, 2017, the EPA has determined that, based on 2013 to 2015 ambient air quality data, the Chico, CA $PM_{2.5}$ nonattainment area has attained the 2006 24-hour $PM_{2.5}$ NAAQS by the applicable attainment date of December 31, 2015. Therefore, the EPA has met the requirement pursuant to CAA section 188(b)(2) to determine whether the area attained the standard. The EPA also has determined that the Chico, CA nonattainment area will not be reclassified for failure to attain by

its applicable attainment date under section 188(b)(2).

(k) *Determination of attainment.* Effective June 9, 2017, the EPA has determined that, based on 2013 to 2015 ambient air quality data, the Imperial County, CA $PM_{2.5}$ nonattainment area has attained the 2006 24-hour $PM_{2.5}$ NAAQS by the applicable attainment date of December 31, 2015. Therefore, the EPA has met the requirement pursuant to CAA section 188(b)(2) to determine whether the area attained the standard. The EPA also has determined that the Imperial County, CA nonattainment area will not be reclassified for failure to attain by its applicable attainment date under section 188(b)(2).

(l) *Determination of attainment.* Effective June 9, 2017, the EPA has determined that, based on 2013 to 2015 ambient air quality data, the Sacramento, CA $PM_{2.5}$ nonattainment area has attained the 2006 24-hour $PM_{2.5}$ NAAQS by the applicable attainment date of December 31, 2015. Therefore, the EPA has met the requirement pursuant to CAA section 188(b)(2) to determine whether the area attained the standard. The EPA also has determined that the Sacramento, CA nonattainment area will not be reclassified for failure to attain by its applicable attainment date under section 188(b)(2).

(m) *Determination of attainment.* Effective June 9, 2017, the EPA has determined that, based on 2013 to 2015 ambient air quality data, the San Francisco Bay, CA $PM_{2.5}$ nonattainment area has attained the 2006 24-hour $PM_{2.5}$ NAAQS by the applicable attainment date of December 31, 2015. Therefore, the EPA has met the requirement pursuant to CAA section 188(b)(2) to determine whether the area attained the standard. The EPA also has determined that the San Francisco Bay, CA nonattainment area will not be reclassified for failure to attain by its applicable attainment date under section 188(b)(2).

[78 FR 1761, Jan. 9, 2013, as amended at 78 FR 2213, Jan. 10, 2013; 78 FR 42021, July 15, 2013; 78 FR 55228, Sept. 10, 2013; 81 FR 1520, Jan. 13, 2016; 81 FR 42264, June 29, 2016; 81 FR 48355, July 25, 2016; 81 FR 84483, Nov. 23, 2016; 82 FR 13398, Mar. 13, 2017; 82 FR 21715, May 10, 2017]

§ 52.248 Identification of plan—conditional approval.

(a) The EPA is conditionally approving a California State Implementation Plan (SIP) revision submitted on November 13, 2015 updating the motor vehicle emissions budgets for nitrogen oxides (NO_X) and coarse particulate matter (PM_{10}) for the 1987 24-hour PM_{10} standard for the San Joaquin Valley PM_{10} maintenance area. The conditional approval is based on a commitment from the State to submit a SIP revision that demonstrates full implementation of the contingency provisions of the 2007 PM_{10} Maintenance Plan and Request for Redesignation (September 20, 2007). If the State fails to meet its commitment by June 1, 2017, the approval is treated as a disapproval.

(b) The EPA is conditionally approving portions of the California SIP revisions submitted on January 31, 2007 and October 23, 2015, demonstrating control measures in the Antelope Valley portion of the Los Angeles-San Bernardino Counties (West Mojave Desert) nonattainment area implement RACT for the 1997 and 2008 ozone standards. The conditional approval is based on a commitment from the state to submit new or revised rules that will correct deficiencies in the following rules for the Antelope Valley Air Quality Management District:

(1) Rule 462, *Organic Liquid Loading;*

(2) Rule 1110.2, *Emissions from Stationary, Non-road & Portable Internal Combustion Engines;*

(3) Rule 1151, *Motor Vehicle and Mobile Equipment Coating Operations;* and

(4) Rule 1171, *Solvent Cleaning Operations.* If the State fails to meet its commitment by November 9, 2018, the conditional approval is treated as a disapproval.

(c) [Reserved]

(d) The EPA is conditionally approving portions of the California SIP revisions submitted on July 11, 2007 and September 9, 2015, demonstrating control measures in the Mojave Desert portion of the Los Angeles-San Bernardino Counties (West Mojave Desert) nonattainment area implement RACT for the 1997 and 2008 ozone standards. The conditional approval is based on a commitment from the state to

submit new or revised rules that will correct deficiencies in the following rules for the Mojave Desert Air Quality Management District: (i) Rule 461, *Gasoline Transfer and Dispensing;* (ii) Rule 462, *Organic Liquid Loading;* (iii) Rule 463, *Storage of Organic Liquids;* (iv) Rule 1104, *Organic Solvent Degreasing;* (v) Rule 1114, *Wood Products Coating Operations;* (vi) Rule 1115, *Metal Parts and Product Coating Operations;* (vii) Rule 1157, *Boilers and Process Heaters;* (viii) Rule 1160, *Internal Combustion Engines;* (ix) Rule 1161, *Portland Cement Kilns;* and (x) Rule 1162, *Polyester Resin Operations.*If the State fails to meet its commitment by January 31, 2019, the conditional approval is treated as a disapproval.

[82 FR 46926, Oct. 10, 2017, as amended at 82 FR 57135, Dec. 4, 2017; 83 FR 5923, Feb. 12, 2018; 83 FR 23374, May 21, 2018]

§§ 52.249–52.251 [Reserved]

§ 52.252 Control of degreasing operations.

(a) ''Degreasing'' means any operation using an organic solvent as a surface cleaning agent prior to fabricating, surface coating, electroplating, or any other process.

(b) This section is applicable in the Sacramento Valley, San Joaquin Valley, and San Francisco Bay Area Intrastate Air Quality Control Regions (the ''Regions''), as described in 40 CFR part 81, dated July 1, 1979, except as follows:

(1) In the following portions of the Sacramento Valley Region, this section is rescinded:

(i) Sacramento County APCD.

(ii) Placer County APCD (Mountain Counties Air Basin portion).

(iii) Yuba County APCD.

(iv) Sutter County APCD.

(c) Any organic emissions discharged from degreasing operations must either be reduced by at least 85 percent, or the degreasing solvent must be classified as non-photochemically reactive as defined by paragraph (k) of § 52.254 not later than January 1, 1975. This regulation shall not be construed as lessening any emission control requirement specified under EPA approved regulations or § 52.254. Degreasing operations using perchloroethylene or saturated halogenated hydrocarbons shall be exempt from the requirements of this section.

[38 FR 31249, Nov. 12, 1973, as amended at 42 FR 42226, Aug. 22, 1977; 47 FR 15586, Apr. 12, 1982; 47 FR 18856, May 3, 1982; 47 FR 19332, May 5, 1982; 47 FR 28622, July 1, 1982]

§ 52.253 Metal surface coating thinner and reducer.

(a) All terms defined in § 52.254 are used herein with the meanings so defined.

(b) This section is applicable in the Metropolitan Los Angeles, San Diego, Sacramento Valley, San Joaquin Valley, and San Francisco Bay Area Intrastate Air Quality Control Regions (the ''Regions''), as described in 40 CFR part 81, dated July 1, 1979, except as follows:

(1) In the following portions of the Sacramento Valley Intrastate Region, this section is either fully rescinded or partially rescinded subject to the conditions specified as follows:

(i) Sacramento County APCD.

(ii) Placer County APCD (Mountain Counties Air Basin portion).

(iii) This section is rescinded for metal parts and products coaters which are subject to and in full compliance with Yolo-Solano County Rule 2.25 submitted on February 25, 1980.

(iv) Yuba County APCD.

(v) Sutter County APCD.

(2) In the following portions of the Metropolitan Los Angeles Intrastate Region, this section is either fully rescinded or partially rescinded subject to the conditions specified as follows:

(i) This section is fully rescinded for the Ventura County APCD.

(ii) This section is rescinded for magnet wire insulators, can and coil coaters, metal parts coaters, and auto assembly line coaters which are subject to and in full compliance with Rules 1107, 1115, 1125, and 1126 in the South Coast AQMD.

(iii) This section is rescinded for metal parts coaters that are subject to and in full compliance with Rule 330 submitted on October 18, 1979, in the Santa Barbara County APCD.

(3) In the following portions of the San Joaquin Valley Intrastate Region, this section is rescinded for certain sources subject to the conditions specified:

(i) This section is rescinded for metal parts and products coaters which are subject to and in full compliance with Kern County Rule 410.4, submitted on October 15, 1979.

(ii) This section is rescinded for metal parts and products coaters which are subject to and in full compliance with Madera County APCD's Rule 410.4 submitted on October 10, 1980.

(iii) This section is rescinded for metal parts and products coaters which are subject to and in full compliance with Merced County Rule 409.4 submitted on October 10, 1980.

(iv) This section is rescinded for metal parts and products coaters which are subject to and in full compliance with San Joaquin County Rule 409.4 submitted on October 10, 1980.

(v) This section is rescinded for metal parts and products coaters which are subject to and in full compliance with Stanislaus County Rule 410.4 submitted on October 10, 1980.

(vi) This section is rescinded for metal parts and products coaters which are subject to and in full compliance with Tulare County Rule 410.4 submitted on October 10, 1980.

(vii) This section is rescinded for metal parts and products coaters which are subject to and in full compliance with Kings County Rule 410.4 submitted on October 10, 1980.

(viii) This section is rescinded for metal parts and products coaters which are subject to and in full compliance with Fresno County Rule 409.4 submitted on October 15, 1979.

(4) In the San Francisco Bay Area Intrastate Region this section is rescinded for certain operations, subject to the conditions specified below:

(i) This section is rescinded for metal container, closure and coil coating operations, light and medium-duty motor vehicle assembly plants, large appliance and metal furniture coaters, and miscellaneous metal parts and products coating operations, which are subject to and in full compliance with Rules 11, 13, 14, and 19 of Regulation 8 in the Bay Area AQMD.

(5) In the San Diego Intrastate Region, this section is rescinded:

(i) This section is rescinded for metal parts and products coaters which are subject to and in full compliance with San Diego APCD Rule 67.3, submitted on October 25, 1979.

(c) The composition of the organics in all metal surface coating thinners and reducers that are manufactured after January 1, 1975, and are used in the Regions, shall conform to paragraph (k) of § 52.254 so as to be defined as a nonphotochemically reactive solvent.

(d) After July 1975, the composition of the organics in all metal surface coating thinners and reducers that are used in the Regions, shall conform to paragraph (k) of § 52.254 so as to be defined as a non-photochemically reactive solvent.

(e) If there is an inadequate supply of necessary solvent ingredients needed in the manufacture of metal surface coating thinners and reducers for the purpose of meeting the composition requirements of this section in the time constraint required by this section; then evidence of such a supply inadequacy must be presented to the Administrator by the manufacturers of the metal surface coating thinners and reducers, so that the Administrator may grant to the industry an appropriate implementation time extension for meeting the requirements of this section, if and as warranted by the evidence presented.

[38 FR 31249, Nov. 12, 1973, as amended at 42 FR 28123, June 2, 1977; 46 FR 5979, Jan. 21, 1981; 46 FR 42461, Aug. 21, 1981; 47 FR 11870, Mar. 19, 1982; 47 FR 15586, Apr. 12, 1982; 47 FR 18856, May 3, 1982; 47 FR 19332, May 5, 1982; 47 FR 19698, May 7, 1982; 47 FR 24308, June 4, 1982; 47 FR 28622, July 1, 1982]

§ 52.254 Organic solvent usage.

(a) This section is applicable in the Sacramento Valley, San Francisco Bay Area, and San Joaquin Valley Intrastate Air Quality Control Regions (the ''Regions''), as described in 40 CFR part 81, dated July 1, 1979, except as follows:

(1) In the following portions of the San Joaquin Valley Region, only the hourly emission limitations contained in paragraphs (b), (c), and (d) of this section are in effect; the following paragraphs, needed for interpretation are also in effect: Paragraphs (e) through (l) and (o) through (q) of this

section. In addition, this section is entirely rescinded for specific operations for some of the counties noted below:

(i) This section is rescinded entirely for metal parts and products coaters which are subject to and in full compliance with Rule 409.4 for the Fresno County APCD, Rule 410.4 for the Kings County APCD, Rule 410.4 for the Madera County APCD, Rule 409.4 for the Merced County APCD, Rule 409.4 for the San Joaquin County APCD, Rule 409.4 for the Stanislaus County APCD, and Rule 410.4 for the Tulare County APCD.

(ii) Kern County APCD. This section is rescinded entirely for metal parts and product coaters which are subject to and in full compliance with Rule 410.4.

(iii) Fresno County APCD.

(iv) San Joaquin County APCD.

(v) Madera County APCD.

(vi) Merced County APCD.

(2) In the following portions of the San Joaquin Valley Region, only the hourly emission limitations contained in paragraphs (b), (c), and (d) of this section and the architectural coatings and solvent disposal emission limitations contained in paragraphs (m) and (n) of this section are in effect; the following paragraphs, needed for interpretation and enforcement of these emission limitations, are also in effect: Paragraphs (e) through (l) and (o) through (q) of this section.

(i) Kings County APCD.

(3) In the following portions of the Sacramento Valley Region, this section is rescinded:

(i) Sacramento County APCD.

(ii) Yolo-Solano APCD.

(iii) Shasta County APCD.

(iv) Placer County APCD (Mountain Counties Air Basin portion).

(v) Yuba County APCD.

(vi) Sutter County APCD.

(vii) El Dorado County (Mountain Counties Air Basin portion).

(4) This section is rescinded for the San Francisco Bay Area Intrastate Region except for paragraph (d), which is retained until December 31, 1982 for sources constructed prior to October 2, 1974. The following paragraphs, needed for interpretation and enforcement of paragraph (d) are also in effect: Paragraphs (e) through (l) and (o) through (q) of this section.

(5) In the following portions of the Sacramento Valley Intrastate Region, paragraph (m) of this section is rescinded.

(i) Butte County APCD.

(ii) Sutter County APCD.

(b) No person shall discharge into the atmosphere more than 15 pounds of organic materials in any 1 day or more than 3 pounds in any 1 hour from any article, machine, equipment, or other contrivance in which any organic solvent or any material containing organic solvent comes into contact with flame or is baked, heat-cured, or heat-polymerized in the presence of oxygen, unless said discharge has been reduced by at least 85 percent. Those portions of any series of articles, machines, equipment, or other contrivances designed for processing continuous web, strip, or wire that emit organic materials in the course of using operations described in this section shall be collectively subject to compliance with this section.

(c) A person shall not discharge to the atmosphere more than 40 pounds of organic materials in any 1 day or more than 8 pounds in any 1 hour from any article, machine, equipment, or other contrivance used under conditions other than those described in paragraph (b) of this section for employing or applying any photochemically reactive solvent, as defined in paragraph (k) of this section, or material containing such photochemically reactive solvent, unless said discharge has been reduced by at least 85 percent. Emissions of organic materials into the atmosphere resulting from air- or heated-drying of products for the first 12 hours after their removal from any article, machine, or other contrivance described in this section shall be included in determining compliance with this paragraph. Emissions resulting from baking, heat-curing, or heat-polymerizing as described in paragraph (b) of this section shall be excluded from determination of compliance with this section. Those portions of any series of articles, machines, equipment, or other contrivances designed for processing a continuous web, strip, or wire that emit organic materials in the course of

using operations described in this section shall be collectively subject to compliance with this section.

(d) A person shall not, after August 31, 1976, discharge into the atmosphere more than 3,000 pounds of organic materials in any 1 day or more than 450 pounds in any 1 hour from any article, machine, equipment, or other contrivance in which any non-photochemically reactive organic solvent or any material containing such a solvent is employed or applied, unless said discharge has been reduced by at least 85 percent. Emissions of organic materials into the atmosphere resulting from air- or heated-drying of products for the first 12 hours after their removal from any article, machine, equipment, or other contrivance described in this section shall be included in determining compliance with this section. Emissions resulting from baking, heat-curing, or heat-polymerizing as described in paragraph (b) of this section shall be excluded from determination of compliance with this section. Those portions of any series of articles, machines, equipment, or other contrivances designed for processing a continuous web, strip, or wire that emit organic materials in the course of using operations described in this section shall be collectively subject to compliance with this section.

(e) Emissions of organic materials to the atmosphere from the cleaning with photochemically reactive solvent, as defined in paragraph (k) of this section, of any article, machine, equipment, or other contrivance described in paragraph (b), (c), or (d) of this section, shall be included with the other emissions of organic materials for determining compliance with this rule.

(f) Emissions of organic materials into the atmosphere required to be controlled by paragraph (b), (c), or (d) of this section, shall be reduced by:

(1) Incineration, provided that 90 percent or more of the carbon in the organic material being incinerated is oxidized to carbon dioxide, or

(2) Adsorption, or

(3) Processing in a manner determined by the Administrator to be not less effective than the methods outlined in paragraph (f) (1) or (2) of this section.

(g) A person incinerating, adsorbing, or otherwise processing organic materials pursuant to this section shall provide, properly install and maintain in calibration, in good working order and in operation, devices as specified in the authority to construct or permit to operate, or as specified by the Administrator, for indicating temperatures, pressures, rates of flow, or other operating conditions necessary to determine the degree and effectiveness of air pollution control.

(h) Any person using organic solvents or any materials containing organic solvents shall supply the Administrator upon request and in the manner and form prescribed by him, written evidence of the chemical composition, physical properties, and amount consumed for each organic solvent used.

(i) The provisions of this section shall not apply to:

(1) The manufacture of organic solvents, or the transport or storage of organic solvents or materials containing organic solvents.

(2) The use of equipment for which other requirements are specified by rules or which are exempted from air pollution control requirements by applicable rules affecting the storage of petroleum products, effluent oil-water separators, and the transfer of gasoline.

(3) The spraying or other employment of insecticides, pesticides, or herbicides.

(4) The employment, application, evaporation, or drying of saturated halogenated hydrocarbons or perchloroethylene.

(5) The use of any material in any article, machine, equipment, or other contrivance described in paragraph (b), (c), (d), or (e) of this section, if:

(i) The volatile content of such materials consists only of water and organic solvent, and

(ii) The organic solvents comprise not more than 20 percent by volume of said volatile content, and

(iii) The volatile content is not photochemically reactive as defined in paragraph (k) of this section, and

(iv) The organic solvent or any material containing organic solvent does not come into contact with flame.

This last stipulation applies only for those articles, machines, equipment, or contrivances that are constructed or modified after the effective date of this section.

(6) The use of any material in any article, machine, equipment or other contrivance described in paragraph (b), (c), (d), or (e) of this section, if:

(i) The organic solvent content of such material does not exceed 30 percent by volume of said material; this to be effective until January 1, 1977. After January 1, 1977, the organic solvent content of such material must not exceed 20 percent by volume of said material.

(ii) The volatile content is not photochemically reactive as defined in paragraph (k) of this section, and

(iii) The organic solvent or any material containing organic solvent does not come into contact with flame. This last stipulation applies only for those articles, machines, equipment, or contrivances that are constructed or modified after the effective date of this section.

(j) For the purposes of this section, organic solvents include diluents, thinners, and reducers and are defined as organic materials that are liquids at standard conditions and are used as dissolvers, viscosity reducers, or cleaning agents, except that such materials exhibiting a boiling point higher than 220 °F at 0.5 millimeter mercury absolute pressure or having an equivalent vapor pressure shall not be considered to be solvents unless exposed to temperatures exceeding 220 °F.

(k) For the purpose of this section, a photochemically reactive solvent is any solvent with an aggregate of more than 20 percent of its total volume composed of the chemical compounds classified below or which exceeds any of the following individual percentage composition limitations, referred to the total volume of solvent:

(1) A combination of hydrocarbons, alcohols, aldehydes, esters, ethers, or ketones having an olefinic or cycloolefinic type of unsaturation; 5 percent;

(2) A combination of aromatic compounds with 8 or more carbon atoms to the molecule except ethylbenzene, phenyl acetate, and methyl benzoate; 8 percent;

(3) A combination of ethylbenzene, ketones having branched hydrocarbon structures, trichloroethylene or toluene: 20 percent.

Whenever any organic solvent or any constituent of an organic solvent may be classified from its chemical structure into more than one of the above groups of organic compounds, it shall be considered as a member of the most reactive chemical group, that is, that group having the least allowable percent of the total volume of solvents.

(l) For the purpose of this section, organic materials are defined as chemical compounds of carbon excluding carbon monoxide, carbon dioxide, carbonic acid, metallic carbonates, and ammonium carbonate.

(m) Architectural coatings and their use shall conform to the following requirements, on or before January 1, 1975:

(1) A person shall not sell or offer for sale or use in the areas in which this section applies, in containers of 1-quart capacity or larger, any architectural coating containing photochemically reactive solvent, as defined in paragraph (k) of this section.

(2) A person shall not employ, apply, evaporate, or dry in the areas in which this section applies, any architectural coating purchased in containers of 1–quart capacity or larger containing photochemically reactive solvent, as defined in paragraph (k) of this section.

(3) A person shall not thin or dilute any architectural coating with a photochemically reactive solvent, as defined in paragraph (k) of this section.

(4) For the purpose of this section, an architectural coating is defined as a coating used for residential or commercial buildings and their appurtenances, or for industrial buildings.

(n) A person shall not during any one day dispose of a total of more than 1.5 gallons of any photochemically reactive solvent as defined in paragraph (k) of this section, or of any material containing more than 1.5 gallons of any such photochemically reactive solvent by any means that will permit the evaporation of such solvent into the atmosphere.

(o) *Compliance schedule.* (1) Except where other final compliance dates are provided in this section, the owner or operator of any stationary source subject to this section shall comply with this section on or before March 31, 1974. In any event:

(i) Any owner or operator in compliance with this section on the effective date of this section shall certify such compliance to the Administrator no later than 120 days following the effective date of this section.

(ii) Any owner or operator who achieves compliance with this section after the effective date of this section shall certify such compliance to the Administrator within 5 days of the date compliance is achieved.

(p) Any owner or operator of a stationary source subject to paragraph (o)(1) of this section may, not later than 120 days following the effective date of this section, submit to the Administrator for approval a proposed compliance schedule that demonstrates compliance with the provisions in paragraph (o)(1) of this section as expeditiously as practicable but no later than July 31, 1975. The compliance schedule shall provide for increments of progress toward compliance. The dates for achievement of such increments of progress shall be specified. Increments of progress shall include, but not be limited to:

Submittal of a final control plan to the Administrator; letting of necessary contracts for construction or process changes or issuance of orders for the purchase of component parts to accomplish emission control or process modification; initiation of onsite construction or installation of emission control equipment or process modification; completion of onsite construction or installation of emission control equipment or process modification and final compliance.

(q) Any owner or operator who submits a compliance schedule pursuant to this section shall, within 5 days after the deadline for each increment of progress, certify to the Administrator whether or not the required increment of the approved compliance schedule has been met.

[38 FR 31249, Nov. 12, 1973]

EDITORIAL NOTE: For FEDERAL REGISTER citations affecting § 52.254, see the List of CFR Sections Affected, which appears in the Finding Aids section of the printed volume and at *www.fdsys.gov.*

§ 52.255 Gasoline transfer vapor control.

(a) ''Gasoline'' means any petroleum distillate having a Reid vapor pressure of 4 pounds or greater.

(b) This section is applicable in the Metropolitan Los Angeles and Sacramento Valley Intrastate Air Quality Control Regions, as described in 40 CFR part 81, dated July 1, 1979, with the following exceptions:

(1) The control requirements of this section are limited to facilities with a total throughput less than 20,000 gallons per day, the refilling of delivery vessels at these facilities, and storage containers serviced by these facilities for those air pollution control districts identified below.

(i) Ventura County APCD.

(2) The control requirements of this section are rescinded in the following air pollution control districts.

(i) South Coast AQMD.

(ii) Santa Barbara County APCD.

(iii) Placer County APCD (Mountain Counties Air Basin portion).

(iv) Sacramento County APCD.

(v) Yolo-Solano County APCD.

(vi) Butte County APCD.

(vii) Glenn County APCD.

(viii) El Dorado County APCD (Mountain Counties Air Basin portion).

(3) The control requirements of this section are rescinded in the following air pollution control districts:

(i) South Coast AQMD.

(ii)–(viii) [Reserved]

(ix) Santa Barbara County APCD.

(x) Placer County APCD (Mountain Counties Air Basin portion).

(xi) Sacramento County APCD.

(xii) Yolo-Solano County APCD.

(xiii) Butte County APCD.

(xiv) Glenn County APCD.

(c) No person shall transfer gasoline from any delivery vessel into any stationary storage container with a capacity greater than 250 gallons unless such container is equipped with a submerged fill pipe and unless the displaced vapors from the storage container are processed by a system that prevents release to the atmosphere of no less than

90 percent by weight of organic compounds in said vapors displaced from the stationary container location.

(1) The vapor recovery portion of the system shall include one or more of the following:

(i) A vapor-tight return line from the storage container to the delivery vessel and a system that will ensure that the vapor return line is connected before gasoline can be transferred into the container.

(ii) Refrigeration-condensation system or equivalent designed to recover no less than 90 percent by weight of the organic compounds in the displaced vapor.

(2) If a ''vapor-tight vapor return'' system is used to meet the requirements of this section, the system shall be so constructed as to be readily adapted to retrofit with an adsorption system, refrigeration-condensation system, or equivalent vapor removal system, and so constructed as to anticipate compliance with § 52.256.

(3) The vapor-laden delivery vessel shall be subject to the following conditions:

(i) The delivery vessel must be so designed and maintained as to be vapor-tight at all times.

(ii) The vapor-laden delivery vessel may be refilled only at facilities equipped with a vapor recovery system or the equivalent, which can recover at least 90 percent by weight of the organic compounds in the vapors displaced from the delivery vessel during refilling.

(iii) Facilities that do not have more than a 20,000 gallon per day throughput, and distribute less than 10% of daily volume to delivery vehicles that in turn service storage tanks that are required to have a vapor return or balance system, will not be required to comply with the provisions of paragraph (c) of this section before May 31, 1977. Facilities that service delivery vehicles that in turn deliver not more than 500,000 gallons per year to storage tanks that are required to comply with the provisions of paragraph (c) of this section will not be required to comply with the provisions of paragraph (c) of this section before January 1, 1977. Facilities that exclusively service storage tanks that do not have a required vapor return or balance system, will not be required to have a vapor recovery system.

(iv) Gasoline storage compartments of 1,000 gallons or less in gasoline delivery vehicles presently in use on the promulgation date of this regulation will not be required to be retrofitted with a vapor return system until May 31, 1977.

(v) Storage containers served by delivery vessels filled at distribution facilities with extended compliance dates will not be required to comply with the provisions of paragraph (c) of this section until May 31, 1977.

(d) The provisions of paragraph (c) of this section shall not apply to the following:

(1) Storage containers used primarily for the fueling of implements of husbandry, if such container is equipped by May 31, 1977 with a permanent submerged fill pipe, or at the time of installation for containers installed after this date.

(2) Any storage container having a capacity of 2,000 gallons or less and installed prior to July 1, 1975, if such container is equipped with a permanent submerged fill pipe by May 31, 1977.

(3) Transfer made to storage tanks equipped with floating roofs or their equivalent.

(4) Storage containers installed after July 1, 1975 in Kings County.

(5) Storage containers installed after January 1, 1975 in Madera County.

(e) Compliance schedule:

(1) June 1, 1974—Submit to the Administrator a final control plan, which describes at a minimum the steps that will be taken by the source to achieve compliance with the provisions of paragraph (c) of this section.

(2) March 1, 1975—Negotiate and sign all necessary contracts for emission control systems, or issue orders for the purchase of component parts to accomplish emission control.

(3) May 1, 1975—Initiate on-site construction or installation of emission control equipment.

(4) February 1, 1976—Complete on-site construction or installation of emission control equipment.

(5) July 1, 1976—Assure final compliance with the provisions of paragraph (c) of this section.

(6) Any owner or operator of sources subject to the compliance schedule in this paragraph shall certify to the Administrator, within 5 days after the deadline for each increment of progress, whether or not the required increment of progress has been met.

(f) Paragraph (e) of this section shall not apply:

(1) To a source which is presently in compliance with the provisions of paragraph (c) of this section and which has certified such compliance to the Administrator by June 1, 1974. The Administrator may request whatever supporting information he considers necessary for proper certification.

(2) To a source for which a compliance schedule is adopted by the State and approved by the Administrator.

(3) To a source whose owner or operator submits to the Administrator, by June 1, 1974, a proposed alternative schedule. No such schedule may provide for compliance after March 1, 1976. If promulgated by the Administrator, such schedule shall satisfy the requirements of this section for the affected source.

(g) Nothing in this section shall preclude the Administrator from promulgating a separate schedule for any source to which the application of the compliance schedule in paragraph (e) of this section fails to satisfy the requirements of §§ 51.261 and 51.262(a) of this chapter.

(h) Any gasoline-dispensing facility subject to this section that installs a storage tank after the effective date of this section shall comply with the requirements of paragraph (c) of this section by March 1, 1976 and prior to that date shall comply with paragraph (e) of this section as far as possible. Any facility subject to this section that installs a storage tank after March 1, 1976, shall comply with the requirements of paragraph (c) of this section at the time of installation.

[38 FR 31251, Nov. 12, 1973]

EDITORIAL NOTE: For FEDERAL REGISTER citations affecting § 52.255, see the List of CFR Sections Affected, which appears in the Finding Aids section of the printed volume and at *www.fdsys.gov*.

§ 52.256 Control of evaporative losses from the filling of vehicular tanks.

(a) ''Gasoline'' means any petroleum distillate having a Reid vapor pressure of 4 pounds or greater.

(b) This section is applicable in the Metropolitan Los Angeles and Sacramento Valley Intrastate Air Quality Control Regions, except as follows:

(1) In the following portions of the Metropolitan Los Angeles Intrastate Region, this section is rescinded.

(i) South Coast AQMD.

(ii) Santa Barbara County APCD.

(2) In the following portions of the San Joaquin Valley Intrastate Region, this section is rescinded.

(i) Kings County APCD.

(3) In the following portion of the Sacramento Valley Intrastate Region, this section is rescinded.

(i) Sacramento County APCD.

(ii) El Dorado County APCD (Mountain Counties Air Basin portion).

(iii) Placer County APCD (Mountain Counties Air Basin portion).

(c) A person shall not transfer gasoline to an automotive fuel tank from a gasoline dispensing system unless the transfer is made through a fill nozzle designed to:

(1) Prevent discharge of hydrocarbon vapors to the atmosphere from either the vehicle filler neck or dispensing nozzle;

(2) Direct vapor displaced from the automotive fuel tank to a system wherein at least 90 percent by weight of the organic compounds in displaced vapors are recovered; and

(3) Prevent automotive fuel tank overfills or spillage on fill nozzle disconnect.

(d) The system referred to in paragraph (c) of this section can consist of a vapor-tight vapor return line from the fill nozzle/filler neck interface to the dispensing tank or to an adsorption, absorption, incineration, refrigeration-condensation system or its equivalent.

(e) Components of the systems required by paragraph (c) of § 52.255 can be used for compliance with paragraph (c) of this section.

(f) If it is demonstrated to the satisfaction of the Administrator that it is impractical to comply with the provisions of paragraph (c) of this section as

a result of vehicle fill neck configuration, location, or other design features for a class of vehicles, the provisions of this paragraph shall not apply to such vehicles. However, in no case shall such configuration exempt any gasoline dispensing facility from installing and using in the most effective manner a system required by paragraph (c) of this section.

(g) Compliance schedule:

(1) January 1, 1975—Submit to the Administrator a final control plan, which describes at a minimum the steps that will be taken by the source to achieve compliance with the provisions of paragraph (c) of this section.

(2) March 1, 1975—Negotiate and sign all necessary contracts for emission control systems, or issue orders for the purchase of component parts to accomplish emission control.

(3) May 1, 1975—Initiate on-site construction or installation of emission control equipment. Compliance with the requirements of paragraph (c) of this section shall be as soon as practicable, but no later than specified in paragraphs (g) (4) and (5)of this section.

(4) May 1, 1977—Complete on-site construction or installation of emission control equipment or process modification.

(5) May 31, 1977—Assure final compliance with the provisions of paragraph (c) of this section.

(6) Any owner or operator of sources subject to the compliance schedule in this paragraph (g) shall certify to the Administrator, within 5 days after the deadline for each increment of progress, whether or not the required increment of progress has been met.

(h) Paragraph (g) of this section shall not apply:

(1) To a source which is presently in compliance with the provisions of paragraph (c) of this section and which has certified such compliance to the Administrator by January 1, 1975. The Administrator may request whatever supporting information he considers necessary for proper certification.

(2) To a source for which a compliance schedule is adopted by the State and approved by the Administrator.

(3) To a source whose owner or operator submits to the Administrator, by June 1, 1974, a proposed alternative schedule. No such schedule may provide for compliance after May 31, 1977. If promulgated by the Administrator, such schedule shall satisfy the requirements of this section for the affected source.

(i) Nothing in this section shall preclude the Administrator from promulgating a separate schedule for any source to which the application of the compliance schedule in paragraph (g) of this section fails to satisfy the requirements of §§ 51.261 and 51.262(a) of this chapter.

(j) Any gasoline dispensing facility subject to this section that installs a gasoline dispensing system after the effective date of this section shall comply with the requirements of paragraph (c) of this section by May 31, 1977, and prior to that date shall comply with paragraph (g) of this section as far as possible. Any facility subject to this section that installs a gasoline dispensing system after May 31, 1977, shall comply with the requirements of paragraph (c) of this section at the time of installation.

[38 FR 31251, Nov. 12, 1973, as amended at 39 FR 4881, Feb. 8, 1974; 39 FR 21053, June 18, 1974; 46 FR 5979, Jan. 21, 1981; 46 FR 60203, Dec. 9, 1981; 47 FR 19332, May 5, 1982; 47 FR 19698, May 7, 1982; 47 FR 28622, July 1, 1982; 47 FR 29538, July 7, 1982; 51 FR 40676, Nov. 7, 1986]

§§ 52.257–52.262 [Reserved]

§ 52.263 Priority treatment for buses and carpools—Los Angeles Region.

(a) *Definitions:*

(1) ''Carpool'' means a vehicle containing three or more persons.

(2) ''Bus/carpool lane'' means a lane on a street or highway open only to buses (or to buses and carpools), whether constructed especially for that purpose or converted from existing lanes.

(3) ''Preferential treatment'' for any class of vehicles, means either the setting aside of one traffic lane for the exclusive use of such vehicles or other measures (for example, access metering or setting aside the entire street), which the Administrator finds would be at least equal in VMT reduction effect to the establishment of such a lane.

(b) This regulation is applicable in the Metropolitan Los Angeles Intrastate Air Quality Control Region (the ''Region'').

(c) On or before May 31, 1974, the State of California, through the State Department of Transportation or through other agencies to which legal authority has been delegated, shall establish the following system of bus/carpool lanes.

(1) Ventura/Hollywood Corridor—a concurrent flow exclusive bus/carpool lane from Topanga Canyon Boulevard, Woodland Hills (U.S. 101) to junction of the Hollywood Freeway, and contraflow on the Hollywood Freeway (U.S. 101) from the junction with Ventura Freeway in North Hollywood to Vermont Avenue, and bus preferential treatment on arterial surface streets from Vermont Avenue to the Los Angeles central business district (CBD).

(2) Harbor Freeway Corridor—contraflow on Harbor Freeway (California 11) from vicinity of Pacific Coast Highway, in Wilmington, to junction of Santa Monica Freeway (I–10), then by surface street preferential treatment to LA/CBD.

(3) Wilshire Corridor—surface street preferential bus treatment from vicinity of San Vincente Boulevard, to LA/CBD.

(4) San Bernardino Freeway Corridor–Bus/carpool lane, either contraflow, or concurrent flow on San Bernardino Freeway from El Monte terminus of existing San Bernardino Freeway bus lane (I–10), to vicinity of Ontario Airport.

(5) Priority Treatment in CBD—provide preferential treatment in CBD on surface streets to connect Wilshire and San Bernardino corridors.

(d) On or before May 31, 1976, the State of California, through the State Department of Transportation or other agencies to which legal authority has been delegated, shall establish the following system of bus and bus/carpool lanes:

(1) Contraflow lane on the Golden State Freeway (I–5) from junction of Ventura Freeway (California 134) in Los Angeles to San Bernardino Freeway (I–10).

(2) Contraflow on Pasadena Freeway (California 11) from terminus in City of Pasadena to Hollywood Freeway (U.S. 101).

(3) Contraflow on Pomona Freeway from San Gabriel Freeway (I–605) to Santa Ana Freeway (I–5).

(4) Concurrent flow in San Diego Freeway (I–405) from Ventura Freeway (U.S. 101) in Sherman Oaks to Newport Freeway (California 55), Costa Mesa.

(5) Concurrent flow on Long Beach Freeway (California 7) from Santa Ana Freeway (I–5), City of Commerce to San Diego Freeway (I–405), Long Beach.

(6) Artesia Freeway (California 91) from Santa Ana Freeway (I–5) to Long Beach Freeway (California 7), Long Beach.

(e) State III will include specific routes in other portions of the Region.

(f) On or before December 31, 1973, the State of California shall submit to the Administrator a compliance schedule showing the steps it will take to establish the system of bus/carpool lanes required by paragraphs (c) and (d) of this section, with each schedule to include the following:

(1) A schedule for the establishment of the lanes. The schedule for the lanes required by paragraph (d) of this section shall provide for the first such lane to be set aside no later than June 1, 1974.

(2) Bus/carpool lanes must be prominently indicated by overhead signs at appropriate intervals and at each intersection of entry ramps.

(3) Bus/carpool lanes must be prominently indicated by distinctive painted, pylon, or physical barriers.

(4) Vehicles using a bus/carpool lane shall have the right of way when crossing other portions of the road to enter or leave such lanes.

(5) At a minimum, the bus/carpool lanes so set aside shall operate from 6:30 a.m. to 9:30 a.m. and from 3:30 to 6:30 a.m. each weekday.

(g) No deviation from the system of bus/carpool lanes required under paragraphs (c) and (d) of this section shall be permitted except upon application made by the State of California to the Administrator at the time of submittal of compliance schedules and approved

by him, which application must contain a satisfactory designation of alternate routes for the establishment of such lanes.

[38 FR 31254, Nov. 12, 1973]

§§ 52.264–52.268 [Reserved]

§ 52.269 Control strategy and regulations: Photochemical oxidants (hydrocarbons) and carbon monoxide.

(a) The requirements of subpart G of this chapter are not met because the plan does not provide for attainment and maintenance of the national standards for photochemical oxidants (hydrocarbons) and carbon monoxide in the San Francisco Bay Area, San Diego, Sacramento Valley, San Joaquin Valley, and Southeast Desert Intrastate Regions by May 31, 1975.

(b) The following regulatory changes represent a relaxation of previously submitted regulations, and an adequate control strategy demonstration has not been submitted showing that the relaxation would not interfere with the attainment and maintenance of the national standards for photochemical oxidants.

(1) Mountain Counties Intrastate Region.

(i) Calaveras County APCD.

(A) The revocation of Rule 412, Organic Liquid Loading, is disapproved. Rule 412 submitted on June 30, 1972 and previously approved in 40 CFR 52.223 is retained.

(B) The revocation of Rule 413, Effluent Oil Water Separators, is disapproved; and Rule 413 submitted on June 30, 1972 and previously approved in 40 CFR 52.223 is retained.

(ii) Tuolumne County APCD.

(A) The revocation of Rule 413, Organic Liquid Loading, is disapproved; and Rule 413 submitted on June 30, 1972 and previously approved in 40 CFR 52.223 is retained.

(B) The revocation of Rule 414, Effluent Oil Water Separators, is disapproved; and Rule 414 submitted on June 30, 1972 and previously approved in 40 CFR 52.223 is retained.

(C) The revocation of Rule 413, Organic Liquid Loadings, submitted February 10, 1977, is disapproved; and the previously approved Rule 413 submitted on June 30, 1972 remains in effect.

(D) The revocation of Rule 414, Effluent Oil Water Separators, submitted on February 10, 1977, is disapproved; and the previously approved Rule 414 submitted on June 30, 1972, remains in effect.

(1–1) San Joaquin Valley Intrastate Region.

(i) Stanislaus County APCD.

(A) Rule 411.1, submitted on November 4, 1977, is disapproved. Rule 411.1 submitted on April 21, 1976 remains in effect.

(ii) Merced County APCD.

(A) Rule 411.1, submitted on November 4, 1977, is disapproved. Rule 411.1, submitted on August 2, 1976, remains in effect.

(iii) Fresno County APCD.

(A) Rules 411.1, Gasoline Transfer Into Vehicle Fuel Tanks, submitted on November 4, 1977, is disapproved; and Rule 411.1 submitted on April 21, 1976, and previously approved under 40 CFR 52.223, is retained.

(iv) Tulare County APCD.

(A) Section 412.1, Transfer of Gasoline Into Vehicle Fuel Tanks, submitted on October 13, 1977, is disapproved; and Section 412.1, submitted on April 21, 1976, and previously approved under 40 CFR 52.223, is retained.

(v) Madera County APCD.

(A) Rule 412.1, Transfer of Gasoline Into Stationary Storage Containers, submitted on October 13, 1977, is disapproved; and Rules 411, Gasoline Storage and 411.1, Transfer of Gasoline Into Stationary Storage Containers, submitted on June 30, 1972, and April 10, 1976, respectively, and previously approved under 40 CFR 52.223 are retained.

(vi) San Joaquin County APCD.

(A) Rule 411.2, Transfer of Gasoline Into Vehicle Fuel Tanks, submitted on November 4, 1977, is disapproved; and rule 411.2, submitted on February 10, 1976 and previously approved under 40 CFR 52.223, is retained.

(2) Sacramento Valley intrastate region:

(i) Sacramento County APCD.

(A) Rule 13 submitted on November 4, 1977, is disapproved.

(ii) Placer County APCD.

(A) Rule 218, Architectural Coatings, adopted on May 20, 1985 and submitted

to EPA on February 10, 1986 is disapproved. The version of this rule by the same number and title submitted on July 19, 1983 and approved by EPA on May 3, 1984 is retained.

(iii) Sutter County APCD.

(A) Rule 3.15, Architectural Coatings, adopted on October 15, 1985 and submitted to EPA on February 10, 1986 is disapproved. The version of this rule by the same number and title submitted on January 1, 1981 and approved by EPA on May 3, 1982 is retained.

(3) Southeast Desert Intrastate AQCR.

(i) Los Angeles County APCD.

(A) Regulation IV, rule 465, Vacuum Producing Devices or Systems, submitted on June 6, 1977, is disapproved. Rule 74 with the same title, submitted on June 6, 1977, is disapproved. Rule 69 with the same title, submitted on June 30, 1972 and approved under 40 CFR 52.223, is retained.

(ii) Riverside County APCD.

(A) Regulation IV, rule 465, Vacuum Producing Devices or Systems, submitted on June 6, 1977, is disapproved. Rule 74 with the same title, submitted on June 30, 1972 and approved under 40 CFR 52.223, is retained.

(B) Rule 461, Gasoline Transfer and Dispensing, submitted November 4, 1977, is disapproved. The version of this rule submitted on April 21, 1977 (same number and title), which was previously approved in 40 CFR 52.223, is retained.

(iii) Antelope Valley APCD.

(A) Rule 461, Gasoline Transfer and Dispensing, submitted on May 13, 1999, is disapproved. The version of this rule submitted on January 31, 1996 (same title and number), which was previously approved in 40 CFR 52.220, is retained.

(4) Great Basin Valleys Intrastate Region.

(i) Great Basin Unified APCD.

(A) Rule 418 submitted on November 4, 1977, is disapproved. Rule 418 submitted on April 21, 1976 remains in effect.

(B) Rule 419, Gasoline Loading into Stationary Tanks, submitted on June 22, 1978, is disapproved, and rule 419, submitted April 21, 1976, and previously approved in 40 CFR 52.223, is retained.

(c) The following rules and regulations are disapproved because they represent a relaxation of promulgated EPA regulations, and an adequate control strategy demonstration has not been submitted showing that the relaxation would not interfere with the attainment and maintenance of the national standrds for photochemical oxidants:

(1) Sacramento Valley Intrastate AQCR.

(i) Yolo-Solano APCD.

(A) Rules 2.21(b)(1), 2.21(b)(2), 2.21(b)(4), 2.21(b)(5) and 2.21(b)(6), submitted on June 6, 1977.

(d) Imperial County APCD Rule 415, Gasoline Loading from Tank Trucks and Trailers, submitted by the State on November 4, 1977 is approved as applicable to facilities installed after July 1, 1977. District Rule 125, Gasoline Loading into Tank Trucks and Trailers and Rule 129, Gasoline loading into Tanks, submitted on February 21, 1972 and previously approved under 40 CFR 52.223 are retained as part of the State implementation plan, as applicable to facilities installed prior to July 1, 1977.

(e) The emission reduction credits for the following control measures contained in Ventura County's 1982 Ozone nonattainment area plan, submitted by the Governor's designee on December 31, 1982, are disapproved since the control measures are of an intermittent and voluntary nature and are therefore not approvable under Sections 110(a)(2)(F)(v) and 123 of the Clean Air Act: R–38/N–16, ''No Use Day''; R–39/N–17, ''No Drive Day''; R–40, ''No Spray Day''; R–41/N–18 ''Stationary Source Curtailments.''

[38 FR 16564, June 22, 1973. Redesignated at 40 FR 3767, Jan. 24, 1975]

EDITORIAL NOTE: For FEDERAL REGISTER citations affecting § 52.269, see the List of CFR Sections Affected, which appears in the Finding Aids section of the printed volume and at *www.fdsys.gov*.

§ 52.270 Significant deterioration of air quality.

(a) With the exception of the areas listed in paragraph (b) of this section:

(1) The requirements of Sections 160 through 165 of the Clean Air Act are not met in California.

(2) The plan does not include approvable procedures for preventing the significant deterioration of air quality.

(3) The provisions of § 52.21 except paragraph (a)(1) are hereby incorporated and made a part of the applicable State plan for the State of California.

(b) *District PSD Plans.* (1) The PSD rules for Sacramento County Air Pollution Control District are approved under Part C, Subpart 1, of the Clean Air Act. However, EPA is retaining authority to apply § 52.21 in certain cases. The provisions of § 52.21 except paragraph (a)(1) are therefore incorporated and made a part of the State plan for California for the Sacramento County Air Pollution Control District for:

(i) Those cogeneration and resource recovery projects which are major stationary sources or major modifications under § 52.21 and which would cause violations of PSD increments.

(ii) Those projects which are major stationary sources or major modifications under § 52.21 and which would either have stacks taller than 65 meters or would use ''dispersion techniques'' as defined in § 51.1.

(iii) Sources for which EPA has issued permits under § 52.21, including the following permit and any others for which applications are received by June 19, 1985.

Procter & Gamble, SAC 83–01, 5/6/83.

(2) The PSD rules for North Coast Unified Air Quality Management District are approved under Part C, Subpart 1, of the Clean Air Act. However, EPA is retaining authority to apply § 52.21 in certain cases. The provisions of § 52.21 except paragraph (a)(1) are therefore incorporated and made a part of the State plan for California for the North Coast Unified Air Quality Management District for:

(i) Those cogeneration and resource recovery projects which are major stationary sources or major modifications under § 52.21 and which would cause violations of PSD increments.

(ii) Those projects which are major stationary sources of major modifications under § 52.21 and which would either have stacks taller than 65 meters or would use ''dispersion techniques'' as defined in § 51.1.

(iii) Sources for which EPA has issued permits under § 52.21, including the following permits and any others for which applications are received by July 31, 1985;

(A) Arcata Lumber Co. (NC 78–01; November 8, 1979),

(B) Northcoast Paving (NC 79–03; July 5, 1979),

(C) PG&E Buhne Pt. (NC 77–05).

(iv) Those projects which are major stationary sources or major modifications for nitrogen oxides as precursors to ozone under § 52.21.

(v) Those projects that are major stationary sources or major modifications for emissions of $PM_{2.5}$ or its precursors under § 52.21, and those projects that are major stationary sources under § 52.21 with the potential to emit $PM_{2.5}$ or its precursors at a rate that would meet or exceed the rates specified at § 52.21(b)(23)(i).

(3) The PSD program for Mendocino County Air Quality Management District, as incorporated by reference in § 52.220(c)(489) is approved under Part C, Subpart 1, of the Clean Air Act. However, EPA is retaining authority to apply § 52.21 in certain cases. The provisions of § 52.21 except for paragraph (a)(1) are therefore incorporated and made a part of the State plan for California for the Mendocino County Air Quality Management District for:

(i) Those cogeneration and resource recovery projects which are major stationary sources or major modifications under § 52.21 and which would cause violations of PSD increments.

(ii) Those projects which are major stationary sources or major modifications under § 52.21 and which would either have stacks taller than 65 meters or would use ''dispersion techniques'' as defined in § 51.1.

(iii) Any sources for which EPA has issued permits under § 52.21, including any permits for which applications are received by July 31, 1985.

(4) The PSD program for Northern Sonoma County Air Pollution Control District, as incorporated by reference in § 52.220(c)(481) is approved under Part C, Subpart 1, of the Clean Air Act. The provisions of § 52.21 except paragraph (a)(1) are therefore incorporated and

made a part of the State plan for California for the Northern Sonoma County Air Pollution Control District for:

(i) Those cogeneration and resource recovery projects which are major stationary sources or major modifications under § 52.21 and which would cause violations of PSD increments.

(ii) Those projects which are major stationary sources or major modifications under § 52.21 and which would either have stacks taller than 65 meters or would use ''dispersion techniques'' as defined in § 51.1.

(iii) Any sources for which EPA has issued permits under § 52.21, including any permits for which applications are received by July 31, 1985.

(5) Rule 2410, ''Prevention of Significant Deterioration,'' adopted on June 16, 2011, for the San Joaquin Valley Unified Air Pollution Control District (SJVUAPCD) is approved under Part C, Subpart 1, of the Clean Air Act, based, in part, on the clarifications provided in a May 18, 2012 letter from the San Joaquin Valley Unified Air Pollution Control District described in § 52.220(c)(415). For PSD permits previously issued by EPA pursuant to § 52.21 to sources located in the SJVUAPCD, this approval includes the authority for the SJVUAPCD to conduct general administration of these existing permits, authority to process and issue any and all subsequent permit actions relating to such permits, and authority to enforce such permits, except for:

(i) Those specific sources within the SJVUAPCD that have submitted PSD permit applications to EPA and for which EPA has issued a proposed PSD permit decision, but for which final agency action and/or the exhaustion of all administrative and judicial appeals processes (including any associated remand actions) have not yet been concluded or completed by November 26, 2012. The SJVUAPCD will assume full responsibility for the administration and implementation of such PSD permits immediately upon notification from EPA to the SJVUAPCD that any and all administrative and judicial appeals processes (and any associated remand actions) have been completed or concluded for any such permit decision. Prior to the date of such notification, EPA is retaining authority to apply § 52.21 for such permit decisions, and the provisions of § 52.21, except paragraph (a)(1), are therefore incorporated and made a part of the State plan for California for the SJVUAPCD for such permit decisions during the identified time period.

(ii) [Reserved]

(6) The PSD program for the Placer County Air Pollution Control District (PCAPCD), as incorporated by reference in § 52.220(c)(391), is approved under part C, Subpart 1, of the Clean Air Act. For PSD permits previously issued by EPA pursuant to § 52.21 to sources located in the PCAPCD, this approval includes the authority for the PCAPCD to conduct general administration of these existing permits, authority to process and issue any and all subsequent permit actions relating to such permits, and authority to enforce such permits.

(7) The PSD program for the Imperial County Air Pollution Control District, as incorporated by reference in § 52.220(c)(411), is approved under part C, Subpart 1, of the Clean Air Act.

(8) The PSD program for the Eastern Kern Air Pollution Control District (EKAPCD), as incorporated by reference in § 52.220(c)(419), is approved under part C, Subpart 1, of the Clean Air Act. For PSD permits previously issued by EPA pursuant to § 52.21 to sources located in the EKAPCD, this approval includes the authority for the EKAPCD to conduct general administration of these existing permits, authority to process and issue any and all subsequent permit actions relating to such permits, and authority to enforce such permits.

(9) The PSD program for the Yolo-Solano Air Quality Management District, as incorporated by reference in § 52.220(c)(420), is approved under part C, Subpart 1, of the Clean Air Act.

(10) The PSD program for greenhouse gases (GHGs) in Rule 1714 for the South Coast Air Quality Management District (SCAQMD), as incorporated by reference in § 52.220(c)(421), is approved under part C, Subpart 1, of the Clean Air Act. This approval is limited to sources subject to the PSD program for GHGs. The provisions of § 52.21 (except paragraph (a)(1)) continue to apply to

the SCAQMD for all pollutants subject to regulation, as defined in § 52.21, except for GHGs.

(11) The PSD program for the Great Basin Unified Air Pollution Control District (GBUAPCD), as incorporated by reference in § 52.220(c)(428), is approved under Part C, Subpart 1, of the Clean Air Act. For PSD permits previously issued by EPA pursuant to § 52.21 to sources located in the GBUAPCD, this approval includes the authority for the GBUAPCD to conduct general administration of these existing permits, authority to process and issue any and all subsequent permit actions relating to such permits, and authority to enforce such permits.

(12) The PSD program for the Butte County Air Quality Management District (BCAQMD), as incorporated by reference in § 52.220(c)(428), is approved under Part C, Subpart 1, of the Clean Air Act. For PSD permits previously issued by EPA pursuant to § 52.21 to sources located in the BCAQMD, this approval includes the authority for the BCAQMD to conduct general administration of these existing permits, authority to process and issue any and all subsequent permit actions relating to such permits, and authority to enforce such permits.

(13) The PSD program for the Feather River Air Quality Management District (FRAQMD), as incorporated by reference in § 52.220(c)(429), is approved under Part C, Subpart 1, of the Clean Air Act. For PSD permits previously issued by EPA pursuant to § 52.21 to sources located in the FRAQMD, this approval includes the authority for the FRAQMD to conduct general administration of these existing permits, authority to process and issue any and all subsequent permit actions relating to such permits, and authority to enforce such permits.

(14) The PSD program for the San Luis Obispo County Air Pollution Control District (SLOAPCD), as incorporated by reference in § 52.220(c)(441), is approved under Part C, Subpart 1, of the Clean Air Act.

(15) The PSD program for the Santa Barbara County Air Pollution Control District (SBAPCD), as incorporated by reference in § 52.220(c)(442), is approved under Part C, Subpart 1, of the Clean Air Act. For PSD permits previously issued by EPA pursuant to § 52.21 to sources located in the SBAPCD, this approval includes the authority for the SBAPCD to conduct general administration of these existing permits, authority to process and issue any and all subsequent permit actions relating to such permits, and authority to enforce such permits.

(16) The PSD program for the Bay Area Air Quality Management District (BAAQMD), as incorporated by reference in § 52.220(c)(429)(i)(E)(*2*), is approved under part C, subpart 1, of the Clean Air Act. For PSD permits previously issued by EPA pursuant to § 52.21 to sources located in the BAAQMD, this approval includes the authority for the BAAQMD to conduct general administration of these existing permits, authority to process and issue any and all subsequent permit actions relating to such permits, and authority to enforce such permits.

(17) The PSD program for the Ventura County Air Pollution Control District (VCAPCD), as incorporated by reference in § 52.220(c)(474)(i)(D)(*1*), is approved under part C, subpart 1, of the Clean Air Act. For PSD permits previously issued by EPA pursuant to § 52.21 to sources located in the VCAPCD, this approval includes the authority for the VCAPCD to conduct general administration of these existing permits, authority to process and issue any and all subsequent permit actions relating to such permits, and authority to enforce such permits.

[50 FR 25419, June 19, 1985, as amended at 50 FR 30943, July 31, 1985; 68 FR 11322, Mar. 10, 2003; 68 FR 74488, Dec. 24, 2003; 76 FR 48008, Aug. 8, 2011; 77 FR 65310, Oct. 26, 2012; 77 FR 73322, Dec. 10, 2012; 77 FR 73320, Dec. 10, 2012; 80 FR 69882, Nov. 12, 2015; 81 FR 50342, Aug. 1, 2016; 81 FR 69392, Oct. 6, 2016; 82 FR 13245, Mar. 10, 2017; 82 FR 14611, Mar. 22, 2017; 82 FR 30773, July 3, 2017]

§ 52.271 Malfunction, startup, and shutdown regulations.

(a) The following regulations are disapproved because they would permit the exemption of sources from the applicable emission limitations and therefore do not satisfy the enforcement imperatives of section 110 of the Clean Air Act.

(1) Amador County APCD.

(i) Rule 404, submitted on April 21, 1976.

(ii) Rule 4f, submitted on June 30, 1972, and previously approved under 40 CFR 52.223 (37 FR 19812).

(2) Bay Area APCD.

(i) Regulation 2, Section 3212, and Regulation 3, Section 3203, submitted on April 21, 1976.

(ii) Regulation 2, Section 3212, submitted on February 21, 1972, and previously approved under 40 CFR 52.223 (37 FR 10842).

(3) Calaveras County APCD.

(i) Rules 110 and 402(f), submitted on July 25, 1973.

(ii) Rule 404, submitted on October 13, 1977.

(4) Colusa County APCD.

(i) Rule 4.4g, submitted on July 25, 1973, and Rule 4.4g, submitted on June 30, 1972, and previously approved under 40 CFR 52.223 (37 FR 19812).

(5) Del Norte County APCD.

(i) Rule 540, submitted on November 10, 1976.

(ii) Rule 45, submitted on February 21, 1972, and previously approved under 40 CFR 52.223 (37 FR 10842).

(6) Fresno County APCD.

(i) Rule 110, submitted on June 30, 1972, and previously approved under 40 CFR 52.223.

(ii) Rules 110 and 402(f), submitted on October 23, 1974.

(7) Glenn County APCD.

(i) Rules 95.2 and 95.3, submitted on January 10, 1975.

(8) Great Basin Unified APCD.

(i) Rule 403, submitted on June 6, 1977.

(ii) Rule 617, submitted on November 4, 1977.

(9) Humboldt County APCD.

(i) Rule 540, Submitted on November, 10, 1976.

(ii) Rule 59, Submitted on February 21, 1972 and previously approved under 40 CFR 52.223 (37 FR 10842).

(10) Kern County APCD.

(i) Rule 111, submitted on July 19, 1974.

(11) Kings County APDC.

(i) Rule 111, submitted on July 25, 1973, and Rule 111, submitted on July 30, 1972, and previously approved under 40 CFR 52.223.

(ii) Rule 111, submitted on November 4, 1977.

(12) Lake County APCD.

(i) Chapter III, Article I, Section 500, and Article II, Sections 510 and 511, submitted on February 10, 1977.

(ii) Part VI, Sections 1 and 2, submitted on June 30, 1972, and previously approved under 40 CFR 52.223.

(13) Los Angeles County APCD.

(i) Rule 430, submitted on June 6, 1977.

(14) Madera County APCD.

(i) Rule 402(f), submitted on January 10, 1975, and Rule 110, submitted on June 30, 1972, and previously approved under 40 CFR 52.223.

(ii) Rule 110, submitted on January 10, 1975.

(15) Mariposa County APCD.

(i) Rule 203(j), submitted on January 10, 1975, and Rule 4.3(g), submitted on February 21, 1972, and previously approved under 40 CFR 52.223.

(ii) Rule 404, submitted on June 6, 1977.

(16) Mendocino County APCD.

(i) Rule 540, submitted on November 10, 1976.

(ii) Sections 1 and 2 of Part VI, submitted on February 21, 1972, and previously approved under 40 CFR 52.223 (37 FR 10842).

(17) Merced County APCD.

(i) Rule 109, submitted on August 2, 1976.

(ii) Rule 109, submitted on June 30, 1972, and previously approved under 40 CFR 52.223 (37 FR 19812).

(18) Nevada County APCD.

(i) Rule 55(f), submitted on February 21, 1972, and previously approved under 40 CFR 52.223 (37 FR 10842).

(19) Northern Sonoma County APCD.

(i) Rule 540, submitted on November 10, 1976.

(20) Placer County APCD.

(i) Rule 55(f), submitted on February 21, 1972, and previously approved under 40 CFR 52.223 (37 FR 10842).

(ii) Rule 404, submitted on October 13, 1977.

(21) Plumas County APCD.

(i) Rule 203(j), submitted on January 10, 1975.

(ii) Rule 404, submitted on June 6, 1977.

(22) Riverside County APCD.

(i) Rule 430, submitted on June 6, 1977.

(23) San Bernardino County APCD.

(i) Rule 430, submitted on June 6, 1977.

(ii) Rule 55, submitted on February 21, 1972, and previously approved under 40 CFR 52.223 (37 FR 10842).

(24) San Joaquin County APCD.

(i) Rule 110, submitted on October 23, 1974, and Rule 110, submitted on June 30, 1972, and previously approved under 40 CFR 52.223 (37 FR 19812).

(25) San Luis Obispo County APCD.

(i) Rule 107, submitted on November 10, 1976.

(ii) Rule 102, submitted on February 21, 1972, and previously approved under 40 CFR 52.223 (37 FR 10842).

(26) Shasta County APCD.

(i) Rule 3:10, submitted on July 19, 1974.

(ii) Rule 3:10, submitted on June 30, 1972, and previously approved under 40 CFR 52.223 (37 FR 19812).

(27) Sierra County APCD.

(i) Rule 51, submitted on June 30, 1972, and previously approved under 40 CFR 52.223 (37 FR 19812), and Rule 203(j), submitted on January 10, 1975, and previously approved under 40 CFR 52.223 (42 FR 23805).

(ii) Rule 404, submitted on June 6, 1977.

(28) Southern California APCD.

(i) Rule 430, submitted on February 10, 1977.

(29) Stanislaus County APCD.

(i) Rule 110, submitted on June 30, 1972, and previously approved under 40 CFR 52.223 (37 FR 19812), and Rule 110, submitted on July 19, 1974.

(30) Tehama County APCD.

(i) Rule 417, submitted on July 19, 1974.

(ii) Rule 4:1g, submitted on June 30, 1972, and previously approved under 40 CFR 52.223 (37 FR 19812).

(31) Trinity County APCD.

(i) Rule 540, submitted on November 10, 1976.

(ii) Rule 44, submitted on June 30, 1972, and previously approved under 40 CFR 52.223 (37 FR 19812).

(32) Tulare County APCD.

(i) Rules 111 and 402(f), submitted on November 10, 1976.

(33) Tuolumne County APCD.

(i) Rule 404, submitted on February 10, 1977, and Rule 402(f), submitted on June 30, 1972, and previously approved under 40 CFR 52.223.

(34) Ventura County APCD.

(i) Rule 32, submitted on July 19, 1974.

(ii) Rule 32, submitted on June 30, 1972, and previously approved under 40 CFR 52.223 (37 FR 19812).

(35) Yuba County APCD.

(i) Rule 4.5, submitted on July 25, 1973.

(b) The following regulations are disapproved since they lack explicit provisions to assure that that NAAQS will not be exceeded while equipment breakdown periods are in effect.

(1) Fresno County APCD.

(i) Rules 110(B), *Variance Required*, and 519, *Emergency Variance*, submitted on January 2, 1979.

(2) Kern County APCD.

(i) Rules 111 (b), *Equipment Breakdown*, and 519, *Emergency Variance*, submitted on January 2, 1979.

(3) Modoc County APCD.

(i) Rule 2:15, *Breakdown Conditions; Emergency Variances*, submitted on May 7, 1979.

(4) Imperial County APCD.

(i) Rule 111 (B), *Equipment Breakdown*, submitted on December 24, 1979.

(ii) Rule 517, *Emergency Variance*, submitted on December 24, 1979.

(5) Butte County AQMD.

(i) Rule 275, Reporting Procedures for Excess Emissions, submitted on May 10, 1996.

(6) Shasta County AQMD.

(i) Rule 3:10, Excess Emissions, submitted on May 10, 1996.

(7) Monterey Bay Unified Air Pollution Control District.

(i) Rule 214, Breakdown Condition, submitted on October 30, 2001.

(c) The following regulations are disapproved because they exempt sources from applicable emissions limitations during malfunctions and/or fail to sufficiently limit startup and shutdown exemptions to those periods where it is technically infeasible to meet emissions limitations.

(1) South Coast Air Quality Management District.

(i) Rule 429, submitted on January 28, 1992.

(d) The following regulations are disapproved because they merely describe how state agencies intend to apply their enforcement discretion and thus, if approved, the regulations would have

no effect on the State Implementation Plan.

(1) Antelope Valley AQMD.

(i) Rule 430, Breakdown Provisions, submitted on February 16, 1999.

(2) Kern County APCD.

(i) Rule 111, Equipment Breakdown, submitted on July 23, 1996.

(3) Mojave Desert AQMD.

(i) Rule 430, Breakdown Provisions, submitted on January 24, 1995.

[43 FR 3277, Jan. 24, 1978]

EDITORIAL NOTE: For FEDERAL REGISTER citations affecting § 52.271, see the List of CFR Sections Affected, which appears in the Finding Aids section of the printed volume and at *www.fdsys.gov*.

§ 52.272 Research operations exemptions.

(a) The requirements of § 51.281 of this chapter are not met because the following regulations allow exemptions to be granted from the applicable emission limitations, thereby potentially rendering the applicable limitations unenforceable. Furthermore, the regulations are inconsistent with the Clean Air Act, because the regulations could permit violations of the National Ambient Air Quality Standards under some circumstances. Therefore, the following regulations are disapproved:

(1) Bay Area APCD.

(i) Regulation 2, Division 1, sections 1214 to 1214.3, submitted on July 25, 1973.

(ii) Regulation 3, Division 1, sections 1205 to 1205.3, submitted on July 25, 1973.

(2) El Dorado County APCD.

(i) Rule 203(D), submitted on November 4, 1977.

(3) Great Basin Unified APCD.

(i) Rule 423, submitted on November 4, 1977.

(4) Los Angeles County APCD.

(i) Rule 441, submitted on June 6, 1977.

(5) Placer County APCD.

(i) Rule 203(D), submitted on October 13, 1977.

(6) Riverside County APCD.

(i) Rule 441, submitted on June 6, 1977.

(7) Sacramento County APCD.

(i) Rule 30, submitted on January 22, 1974.

(8) San Bernardino County APCD.

(i) Rule 441, submitted on June 6, 1977.

(9) Southern California APCD.

(i) Rule 441, submitted on August 2, 1976.

[42 FR 42226, Aug. 22, 1977]

EDITORIAL NOTE: For FEDERAL REGISTER citations affecting § 52.272, see the List of CFR Sections Affected, which appears in the Finding Aids section of the printed volume and at *www.fdsys.gov*.

§ 52.273 Open burning.

(a) The following rules or portions of rules are disapproved because they contain exemptions to open burning (including open agricultural burning) prohibitions, that do not satisfy the requirements of section 110 of the Clean Air Act:

(1) Amador County APCD.

(i) Rules 308 and 312, submitted on April 21, 1976.

(ii) Rule 304, submitted on October 13, 1977.

(iii) Rules 302(G) and 322, submitted on October 15, 1979.

(2) Calaveras County APCD.

(i) Rules 304 and 322, submitted on October 13, 1977.

(3) Del Norte County APCD.

(i) Rule 410(c)(2) and the following portions of Regulation 2: General prohibitions (all of page 1), paragraph (f) of Article I, paragraphs (f) and (g) of Article V, and paragraph (f) of Article VI, submitted on November 10, 1976.

(4) El Dorado County APCD.

(i) Rules 302(C), 304, 307, 319, and 322, submitted on November 4, 1977.

(ii) Rules 302 (C), 318, and 321, submitted on May 23, 1979.

(5) Fresno County APCD.

(i) Rules 416.1(e)(1), (e)(3), and (e)(4), submitted on October 23, 1974.

(ii) Rule 416.1(c)(1), submitted on June 30, 1972, and previously approved under 40 CFR 52.223 (37 FR 19812).

(6) Humboldt County APCD.

(i) Rule 410(c)(2) and the following portions of Regulation 2: General prohibitions (all of page 1), paragraph (f) of Article I, paragraphs (f) and (g) of Article V, and paragraph (f) of Article VI, submitted on November 10, 1976.

(ii) (A)–(C) [Reserved]

(D) Rules 312 (B) and (C), and 401 (D.1) and (D.2).

(7) Kern County APCD.

(i) Rule 417(I)(A), submitted on November 10, 1976.

(8) Madera County APCD.

(i) Rules 416.1(e)(1), (e)(3), and (e)(4), submitted on January 10, 1975.

(ii) Rule 416.1(c)(1), submitted on June 30, 1972, and previously approved under 40 CFR 52.223 (37 FR 19812).

(9) Mariposa County APCD.

(i) Rules 302(C), 304, 319, and 322, submitted on June 6, 1977.

(10) Mendocino County APCD.

(i) Rule 410(c)(2) and the following portions of Regulation 2: General prohibitions (all of page 1), paragraph (f) of Article I, paragraphs (f) and (g) of Article V, and paragraph (f) of Article VI, submitted on November 10, 1976.

(11) Merced County APCD.

(i) Rule 416(h), submitted on August 2, 1976.

(ii) Rules 416.1(III)(A), (V)(A), (V)(B), (V)(C), and (V)(D), submitted on August 2, 1976. (Rule 416.1(c)(2), submitted on June 30, 1972, and previously approved, is retained. Rule 416.1(a)(1), submitted on June 30, 1972, and previously approved, is retained for the purpose of enforcing Rule 416.1(c)(2).)

(12) Monterey Bay Unified APCD.

(i) Rules 409(a), 409(a)(5), and 410(b)(1), submitted on January 10, 1975.

(13) Nevada County APCD.

(i) Rules 302(C), 307, 314, and 322, submitted on April 10, 1975.

(ii) Rules 304 and 319, submitted on June 6, 1977.

(iii) Rule 307, submitted on October 15, 1979.

(14) Northern Sonoma County APCD.

(i) Rule 410(c)(2) and the following portions of Regulation 2: General prohibitions (all of page 1), paragraph (f) of Article I, paragraphs (f) and (g) of Article V, and paragraph (f) of Article VI, submitted on November 10, 1976.

(15) Placer County APCD.

(i) Rules 302(C), 302(G), 304, 307, 314, 319, and 322, submitted on October 13, 1977.

(ii) Rules 303, 306, and 322, submitted on October 15, 1979.

(16) Plumas County APCD.

(i) Rule 314, submitted on January 10, 1975.

(ii) Rules 302(C), 304, 307, 319, and 322, submitted on June 6, 1977.

(17) Sacramento County APCD.

(i) Rule 96(a), submitted on November 10, 1976.

(ii) Rule 96(a), submitted on November 4, 1977.

(18) San Joaquin County APCD.

(i) Rule 402(e), submitted on November 10, 1976.

(ii) Rule 416.1(c)(1), submitted on June 30, 1972, and previously approved under 40 CFR 52.223 (37 FR 19812).

(iii) Rules 416.1(D)(1) and (D)(2), submitted on October 23, 1974.

(19) Santa Barbara County APCD.

(i) Rules 40(4)(a) and 40(4)(1), submitted on July 25, 1973. (The analogous Rules 40(4)(a) and 40(4)(g), previously approved in the February 21, 1972 submittal, are retained.) Rule 40(4)(c), submitted on July 25, 1973, is also disapproved.

(ii) Rule 22, submitted on January 22, 1974. (The analogous Rule 22, previously approved in the February 21, 1972 submittal, is retained.) Rules 24.1 and 24.2, submitted on January 22, 1974, are also disapproved.

(20) Shasta County APCD.

(i) Rule 2:6, sections (1)(b)(iii) (a, b, and d), (1)(c)(viii), 2(c), 3(f), 4(e), 5(c), and 5(d). (Previously approved Rule 2:6, sections (2)(c), (3)(f), and (4)(e), submitted on July 19, 1974, are retained.)

(21) Sierra County APCD.

(i) Rules 302(C), 319, and 322, submitted on June 6, 1977.

(22) Trinity County APCD.

(i) Rule 410(c)(2) and the following portions of Regulation 2: General prohibitions (all of page 1), paragraph (f) of Article I, paragraphs (f) and (g) of Article V, and paragraph (f) of Article VI, submitted on November 10, 1976.

(23) Tulare County APCD.

(i) Rule 402(e), submitted on November 10, 1976.

(ii) Section 417(III)(A), submitted on June 30, 1972, and previously approved under 40 CFR 52.223 (37 FR 19812).

(iii) Section 417.1(e)(1), (e)(3), and (e)(4), submitted on January 10, 1975.

(24) Tuolumne County APCD.

(i) Rule 322, submitted on February 10, 1977.

(25) Yolo-Solano APCD.

(i) Rules 2.8(c) (4) and (5), 6.3, and 6.5(a), submitted on July 25, 1973.

(ii) Rules 6.1(a), (e)(6), and (g), submitted on January 10, 1975. (Rules 4.1 (a) and (g), submitted on February 21,

1972, and previously approved under 40 CFR 52.223, are retained.)

(b) The following rules or portions of rules are disapproved because they relax the control on open burning (including agricultural burning) without accompanying analyses demonstrating that these relaxations will not interfere with the attainment and maintenance of the National Ambient Air Quality Standards:

(1) Del Norte County APCD.

(i) Regulation 2, Article I, paragraph (e), submitted on November 10, 1976.

(ii) Rule 410(c)(2), submitted on May 7, 1979.

(2) Fresno County APCD.

(i) Rule 416.1(c)(1), submitted on October 23, 1974.

(ii) Rule 416.1(g), submitted on November 4, 1977.

(3) Humboldt County APCD.

(i) Regulation 2, Article I, paragraph (e), submitted on November 10, 1976.

(ii) Rule 410(c)(2), submitted on May 7, 1979.

(4) Imperial County APCD.

(i) Rule 422, submitted on November 4, 1977. (The requirements of Rule 115, submitted on February 21, 1972, and previously approved under 40 CFR 52.223, are retained as applicable to the burning of wood waste.)

(ii) Regulation VII (Rules 701 to 706), submitted on November 4, 1977. (Regulation VII (Rules 200 to 206), submitted on July 25, 1973 and previously approved under 40 CFR 52.223, is retained.)

(5) Kings County APCD.

(i) Rules 416.1 and 417.1, submitted on November 4, 1977.

(6) Lake County APCD.

(i) Sections 435, 436, 1003, and 1200(A), submitted on February 10, 1977.

(ii) Section 435, submitted on January 2, 1979.

(7) Los Angeles County APCD.

(i) Rule 444, submitted on June 6, 1977. (Rules 57.1, 57.2, 57.3, and 57.4, submitted on June 30, 1972, and previously approved under 40 CFR 52.223, are retained.)

(8) Madera County APCD.

(i) Rule 416.1(c)(1), submitted on January 10, 1975.

(9) Mendocino County APCD.

(i) Regulation 2, Article I, paragraph (e), submitted on November 10, 1976.

(ii) Rule 410(c)(2), submitted on May 7, 1979.

(10) Merced County APCD.

(i) Rule 416.1(I)(A)(2), submitted on August 2, 1976.

(11) Northern Sonoma County APCD.

(i) Regulation 2, Article I, paragraph (e), submitted on November 10, 1976.

(ii) Rule 410(c)(2), submitted on May 7, 1979.

(12) San Bernardino County Desert APCD.

(i) Rule 444 and the definition of ''Agricultural Burning'' in Rule 102, submitted on November 4, 1977. (Rule 57, submitted on February 21, 1972, and previously approved under 40 CFR 52.223, is retained.)

(13) San Diego County APCD.

(i) Rules 102(e) and 103(g), submitted on October 13, 1977.

(14) San Luis Obispo County APCD.

(i) Rule 501(B), submitted on November 10, 1976, and Rule 501(A)(7), submitted on November 4, 1977. (Previously approved Rule 115(2), submitted on February 21, 1972, is retained.)

(15) Santa Barbara County APCD.

(i) Rules 2(b), 40(3), and 40(4)(e), submitted on July 25, 1973. (Analogous Rules 2(b), 40(3), and 40(4)(c), submitted on February 21, 1972, and previously approved, are retained.)

(16) Shasta County APCD.

(i) Rule 2:8, submitted on October 13, 1977. (Rule 2:8, submitted on July 19, 1974, and July 22, 1975, and previously approved, is retained.)

(17) Siskiyou County APCD.

(i) Rule 4.3(2), submitted on January 2, 1979.

(18) Trinity County APCD.

(i) Regulation 2, Article I, paragraph (e), submitted on November 10, 1976.

(ii) Rule 410(c)(2), submitted on May 7, 1979.

(19) Placer County APCD.

(i) Rule 316, submitted on August 21, 1979.

(ii) Rules 318 and 323, submitted on October 15, 1979.

[42 FR 41122, Aug. 15, 1977]

EDITORIAL NOTE: For FEDERAL REGISTER citations affecting § 52.273, see the List of CFR Sections Affected, which appears in the Finding Aids section of the printed volume and at *www.fdsys.gov*.

§ 52.274 California air pollution emergency plan.

(a) Since the California Air Pollution Emergency Plan does not provide complete, implementable provisions for taking emission control actions necessary to prevent ambient pollutant concentrations from reaching significant harm levels, the requirements of subpart H of this chapter for Priority I and II areas are not met, except in the following areas:

(1) South Coast Air Quality Management District (SCAQMD).

(2) Sacramento County Air Pollution Control District.

(3) Monterey Bay Unified APCD (MBUAPCD).

(4) Santa Barbara Air Quality Management Area portion of the Santa Barbara County Air Pollution Control District.

(5) Bay Area Air Quality Management District.

(6) Ventura County Air Pollution Control District.

(7) San Diego County APCD.

(8) Los Angeles County Air Pollution Control District.

(9) Riverside County Air Pollution Control District.

(10) San Bernardino County Desert Air Pollution Control District.

(11) Imperial County Air Pollution Control District.

(12) Fresno County Air Pollution Control District.

(13) Kern County Air Pollution Control District.

(b) The requirements of subpart H of this chapter are met in the SCAQMD with the following exceptions: SCAQMD Regulation VII has no schedule to assure that the emission control actions are fully implementable; does not provide specific emission control actions for interdistrict coordination; has no provisions for nitrogen dioxide, particulate matter, and sulfur dioxide and particulate matter combined episodes; has no criteria or provisions to protect the eight-hour averaged carbon monoxide significant harm level; and has no provisions for implementation of abatement plans for stage 2 or 3 carbon monoxide or oxidant episodes that are attained without being predicted.

(c) Regulation for prevention of air pollution emergency episodes—plan scheduling, interdistrict coordination, episode criteria, and declaration.

(1) The requirements of this paragraph are applicable in the SCAQMD.

(2) The owner or operator of any governmental, industrial, business, or commercial activity listed in Rules 708.1 and 708.3 of Regulation VII of the SCAQMD, as revised on May 6, 1977, shall submit a Stationary Source Curtailment Plan and/or Traffic Abatement Plan to the Administrator within sixty days after the effective date of this paragraph.

(3) The plans submitted pursuant to the requirements of this paragraph, shall be reviewed by the Administrator for approval or disapproval according to the following schedule:

(i) For sources with emissions of hydrocarbons (HC) or nitrogen oxides (NO_X) greater than or equal to 454 metric tons (500 tons) per year, or for establishments employing 400 or more employees per shift, within 45 days after receipt.

(ii) For sources with emissions of HC or NO_X greater than or equal to 91 metric tons (100 tons) per year and less than 454 metric tons (500 tons) per year, or for establishments employing more than 200 and less than 400 employees per shift, within 90 days after receipt.

(iii) For sources or establishments other than those addressed in paragraphs (c)(3) (i) through (ii) of this section, within 180 days after receipt.

(4) The owner or operator of an industrial, business, governmental or commercial establishment required to submit a plan by this paragraph shall be notified by the Administrator within thirty days after the plan has been evaluated if the plan is disapproved. Any plan disapproved by the Administrator shall be modified to overcome the disapproval and resubmitted to the Administrator within 30 days of the receipt of the notice of disapproval.

(5) In the event specific sources or source areas within the SCAQMD are determined to significantly contribute to a declared air pollution episode in a nearby Air Pollution Control District, emission control actions specified in Regulation VII of the SCAQMD, as revised on May 6, 1977, for that declared episode stage shall be taken in the SCAQMD to abate that episode.

(6) For the purposes of this paragraph, the following episode criteria shall apply to carbon monoxide concentrations averaged over eight hours:

(i) For stage 1, 15 parts per million.

(ii) For stage 2, 30 parts per million.

(iii) For stage 3, 40 parts per million.

(7) The provisions of SCAQMD Regulation VII, as revised on May 6, 1977, relating to carbon monoxide episodes averaged over 12 hours shall apply to carbon monoxide episodes averaged over 8 hours except that the Administrator shall provide for declaration, notification, source inspections, and termination of the episodes.

(8) Whenever the Administrator has determined that the stage 2 or 3 episode level for oxidant or carbon monoxide as specified in Rule 703 of Regulation VII of the SCAQMD, as amended May 6, 1977, is being attained or has been attained, and is predicted to remain at such level for 12 or more hours, or increase, or in the case of oxidant to reoccur within the next 24 hours, unless control actions are taken, the existence of the appropriate episode level and the location of the source-receptor areas shall be declared, and the actions specified in Rules 710(b)(1), 710(b)(2), 711(b)(1), or 711(b)(2) shall be taken by the Administrator.

(d) Regulation for prevention of air pollution emergency episodes—nitrogen dioxide, particulate matter, and sulfur dioxide and particulate matter combined.

(1) The requirements of this paragraph are applicable in the SCAQMD.

(2) For the purposes of this regulation the following definitions apply:

(i) ''Ppm'' means parts per million by volume.

(ii) ''COH'' means coefficient of haze.

(iii) ''Ugm^3'' means micrograms per cubic meter.

(iv) ''Administrator'' means the Administrator of the Environmental Protection Agency or his authorized representative.

(v) ''Major National Holiday'' means a holiday such as Christmas, New Year's Day, or Independence Day.

(vi) ''Source/Receptor Areas'' are defined for each episode occurrence based on air monitoring, geographical, and meteorological factors: Source area is that area in which contaminants are discharged and a receptor area is that area in which the contaminants accumulate and are measured.

(vii) ''Air Contaminants'' means nitrogen dioxide, particulate matter, and/or sulfur dioxide and particulate matter combined.

(3) For the purposes of this regulation, the following episode criteria shall apply:

Contaminants	Averaging time (hours)	Stage 1	Stage 2	Stage 3
Nitrogen dioxide	1	0.6 ppm	1.2 ppm	1.6 ppm.
	24	0.15 ppm	0.3 ppm	0.4 ppm.
Particulate matter	24	3.0 COH	5.0 COH	7.0 COH.
	24	375 ugm^{-3}	625 ugm^{-3}	875 ugm^{-3}.
Sulfur dioxide and particulate matter combined	24	0.2[1]	0.8[1]	1.2[1].
	24	65,000[2]	261,000[2]	393,000[2].

[1] Product of sulfur dioxide (ppm) and particulate matter (COH).
[2] Product of sulfur dioxide (ugm^{-3}) and particulate matter (ugm^{-3}).

(4) Whenever the Administrator has determined that any episode level specified in paragraph (d)(3) of this section is being attained or has been attained, and is predicted to remain at such level for 12 or more hours, or increase, unless control actions are taken, the existence of the appropriate episode level and the location of the source-receptor areas shall be declared.

(5) Whenever the available scientific and meteorological data indicate that any episode level declared by paragraph (d)(4) of this section is no longer occurring and is not predicted to immediately increase again to episode levels, such episode shall be declared terminated.

(6) The following shall be notified by the Administrator whenever an episode is predicted, attained or terminated: (i) Public officials; (ii) persons operating any facility or activity named in paragraph (d)(8) of this section; (iii) public

health, safety, and emergency agencies; (iv) news media.

(7) Upon request of the Administrator, persons operating any facility or activity named in paragraph (d)(8) of this section shall install, properly maintain, and operate radio-receiving equipment with decoding device capable of receiving broadcasts of the declaration and termination of episodes required under this paragraph and instructions as to the actions to be taken.

(8) Stationary source curtailment plans and traffic abatement plans shall be prepared by industrial, business, commercial, and governmental establishments as follows:

(i) The owner or operator of any industrial, business, commercial, or governmental activity listed below shall submit to the Administrator plans to curtail operations causing stationary source air contaminants in such activity:

(A) Petroleum refinery emitting 23 metric tons (25 tons) or more per year of air contaminants.

(B) Metal-melting plant requiring molten metal temperatures in excess of 540 °C (1,000 °F) or metal-refining plant or metal-smelting plant, in which a total of 1,135 kilograms (2,500 pounds) or more of metal are in a molten state at any one time or are poured in any 1 hour.

(C) Fossil fuel-fired electric generating facility having a total rated capacity of 50 megawatts or more.

(D) Any facility or plant emitting 91 metric tons (100 tons) or more per year of air contaminants.

(ii) The plans required by paragraph (d)(8)(i) of this section shall include the following:

(A) A list of equipment which emits nitrogen oxides, particulate matter, and/or sulfur dioxide, including the SCAQMD permit number, the daily amount of air contaminants emitted, and a statement of the minimum time and recommended time to implement the abatement actions for each episode stage for the equipment listed and the percent reduction in emissions at each episode stage.

(B) The total number of employees at the facility during each shift on a normal weekday and on a major national holiday.

(C) The normal amount of electricity used on a normal weekday and on a major national holiday.

(D) The actions to inform employees of the procedures to be taken in the event of an episode declaration.

(E) The name and telephone numbers of the facility's episode action coordinator and alternate, who are responsible for implementation of the plan.

(F) For stage 1 episodes:

(*1*) The measures to voluntarily curtail equipment emitting air contaminants.

(*2*) The measures to curtail or postpone electrically intensive industrial operations, where feasible.

(*3*) The measures for electric utilities to import power from outside the basin to the extent feasible.

(G) For stage 2 episodes:

(*1*) The measures to curtail as much as possible, without upsetting production, equipment operations which emit air contaminants.

(*2*) The measures to postpone operations which can be postponed until after the episode.

(*3*) For fossil fuel-fired combustion sources, including electric utilities, with a heat input greater than 50 million BTU per hour:

(*i*) The measures to burn natural gas.

(*ii*) To the extent that natural gas is not available, the measures to burn fuel oil with a sulfur content of not more than 0.25 percent by weight or the measures to reduce air contaminant emissions to equivalent discharge. Any combustion source may be exempt from the provisions of this paragraph upon demonstration that fuel oil with the specified sulfur content is not available.

(*4*) For electric utilities the measures, in addition to those in paragraph (d)(8)(ii)(F)(*3*) of this section, to:

(*i*) Shift oil burning power generation to non-source areas to the maximum extent consistent with the public health, safety, and welfare.

(*ii*) Shift oil burning power generation to combined cycle gas turbine generating equipment burning fuel oil containing less than 0.15 percent sulfur to the maximum extent consistent with the public health, safety, and welfare.

(*5*) For refineries and chemical plants the measures to be taken to reduce air contaminant emissions by 20 percent without jeopardizing the public health or safety, without causing an increase in the emissions of other air contaminants, withoutdamaging the equipment or without reducing production by more than 20 percent.

(*6*) The measures in paragraph (d)(8)(ii)(F) of this section.

(H) For stage 3 nitrogen dioxide episodes:

(*1*) The measures for petroleum refineries to reduce emissions of nitrogen dioxide by 33 percent, without damaging the equipment or increasing the emissions of other air contaminants.

(*2*) The measures in paragraph (d)(8)(ii)(G) of this section.

(*3*) A list of equipment and the permit numbers of such equipment not operated on a major national holiday.

(*4*) A statement as to whether or not the facility operates on a major national holiday.

(I) For stage 3 particulate matter episodes:

(*1*) The measures for petroleum refineries to reduce emissions of particulate matter by 33 percent, without damaging the equipment or increasing the emissions of other air contaminants.

(*2*) The measures described in paragraph (d)(8)(ii)(G) of this section.

(*3*) The measures for any facility or plant, except electrical generating facilities and petroleum refineries, normally emitting 91 metric tons (100 tons) or more per year of particulate matter to eliminate such emissions by starting no new batches, by ceasing feed of new materials, and by phasing down as rapidly as possible without damage to the equipment.

(*4*) The measures for metal melting, refining, or smelting plants to eliminate emissions of particulate matter by starting no new batches, by ceasing feed of new materials, and by phasing down as rapidly as possible without damage to the equipmen

(J) For stage 3 sulfur dioxide and particulate matter combined episodes:

(*1*) The measures described in paragraphs (d)(8)(ii) (G) and (I) of this section.

(*2*) The measures for petroleum refineries to reduce emissions of sulfur dioxide by 33 percent, without damaging the equipment or increasing the emissions of other air contaminants.

(*3*) The measures for any facility or plant, except electrical generating facilities and petroleum refineries, normally emitting 91 metric tons (100 tons) or more per year of sulfur dioxide to eliminate such emissions by starting no new batches, by ceasing feed of new materials, and by phasing down as rapidly as possible without damage to the equipment.

(K) An estimate of the resultant reduction in air contaminant emissions.

(iii) The owner or operator of any industrial, business, commercial, or governmental activity listed below shall submit to the Administrator plans to curtail or cease operations causing air contaminants from vehicle use:

(A) Operators of 50 or more fleet vehicles.

(B) Industrial, business, commercial, or governmental establishments employing more than 100 persons per shift at one business address.

(iv) The plans required by paragraph (d)(8)(iii) of this paragraph shall include the following:

(A) The total number of employees at the facility during each shift on a normal weekday and on a major national holiday.

(B) The number of motor vehicles and vehicle miles traveled for motor vehicles operated:

(*1*) By the company on company business on a normal weekday and on a major national holiday.

(*2*) By employees commuting from home to the place of business on a normal weekday and on a major national holiday.

(C) The number of parking spaces used on a normal weekday and on a major national holiday.

(D) The minimum number of motor vehicles to be operated that are necessary to protect public health or safety.

(E) The actions to inform employees of the procedures to be taken in the event of an episode declaration.

(F) The name and telephone numbers of the facility's episode action coordinator and alternate, who are responsible for implementation of the plan.

(G) For stage 1 episodes, the methods by which employers will encourage the utilization of car pools or otherwise reduce employee motor vehicle travel.

(H) For stage 2 and 3 episodes, the measures within the reasonable control of the employer to reduce the number of vehicle miles driven by employees in commuting to and from work.

(I) An estimate of the reduction in vehicle miles traveled as a result of the measures in this paragraph.

(v) Each owner or operator required to submit a plan by this paragraph shall submit to the Administrator such plan within 60 days of the effective date of this paragraph.

(vi) The plans submitted in accordance with the provisions of this paragraph shall be approved or disapproved by the Administrator according to the following schedule:

(A) For sources with emissions of air contaminants greater than or equal to 454 metric tons (500 tons) per year, or for establishments employing 400 or more employees per shift, within 45 days after receipt.

(B) For sources with emissions of air contaminants greater than or equal to 91 metric tons (100 tons) per year and less than 454 metric tons (500 tons) per year, or for establishments employing more than 200 and less than 400 employees per shift, within 90 days after receipt.

(C) For sources with emissions of air contaminants less than 91 metric tons (100 tons) per year, or for establishments employing 100 to 200 employees per shift, within 180 days after receipt.

(vii) The owner or operator required to submit a plan by this paragraph shall be notified by the Administrator within 30 days after the plan has been evaluated if the plan is disapproved. Any plan disapproved by the Administrator shall be modified to

(viii) A copy of the plan approved in accordance with the provisions of this paragraph shall be on file and readily available on the premises to any person authorized to enforce the provisions of this section.

(9) The following actions shall be taken in the source and receptor areas upon declaration of a stage 1 episode:

(i) The notifications required by paragraph (d)(6) of this section.

(ii) The Administrator shall advise the public that those individuals with special health problems should follow the precautions recommended by their physicians and health officials.

(iii) The Administrator shall advise school officials to cancel, postpone, or reschedule programs which require outdoor physical activity.

(iv) The Administrator shall request the public to stop all unnecessary driving.

(v) The Administrator shall request the public to operate all privately owned vehicles on a pool basis.

(vi) Persons operating any facility or activity named in paragraph (d)(8) of this section shall implement the appropriate plans specified in paragraph (8) for the declared stage 1 episode and air contaminant(s).

(10) The following actions shall be taken in the source and receptor areas upon declaration of a stage 2 episode:

(i) The actions described in paragraphs (d)(9) (i) through (v) of this section.

(ii) The Administrator shall request suspension of programs that involve physical exertion by participants using public parks or public recreational facilities located in receptor areas.

(iii) The burning of combustible refuse shall be postponed until the episode has been terminated.

(iv) The Administrator shall request the public to reduce the use of electricity by 10 percent.

(v) Persons operating any facility or activity named in paragraph (d)(8) of this section shall implement the appropriate plans specified in paragraph (d)(8) of this section for the declared stage 2 episode and air contaminant(s).

(11) The following actions shall be taken in the source and receptor areas upon declaration of a stage 3 episode:

(i) The actions described in paragraphs (d)(10) (i) through (iii) of this section.

(ii) The Administrator shall request the public to reduce the use of electricity by 40 percent.

(iii) Persons operating any facility or activity named in paragraph (d)(8) of this section shall implement the appropriate plans specified in paragraph (d)(8) of this section for the declared stage 3 episode and air contaminant(s).

(iv) For nitrogen dioxide, the general public, schools, industrial, business, commercial, and governmental activities throughout the District shall operate as though the day were a major national holiday.

(v) For particulate matter and/or sulfur dioxide and particulate matter combined, the Administrator shall request the public to reduce as much as possible activities causing dust emissions including agricultural operations, off-road vehicle use, anddriving on unpaved roads. Construction and demolition operation shall be postponed until the episode has been terminated.

(12) In the event specific sources or source areas within the SCAQMD are determined to significantly contribute to a declared air pollution episode in a nearby Air Pollution Control District, emission control actions specified in this paragraph for that declared episode stage shall be taken in the SCAQMD to abate that episode.

(13) A source inspection plan shall be implemented by the Administrator upon the declaration of any episode stage.

(14) The Administrator shall provide for daily acquisition of forecasts of atmospheric stagnation conditions during any episode stage and updating of such forecasts at least every 12 hours.

(15) Any source that violates any requirement of this section shall be subject to enforcement action under section 113 of the Act.

(16) All submittals or notifications required to be submitted to the Administrator by this section shall be sent to:

Environmental Protection Agency, Air and Hazardous Materials Division (A–4), Attn: Air Programs Branch, 215 Fremont Street, San Francisco, Calif. 94105.

(e) The requirements of subpart H of this chapter are met in the Sacramento County Air Pollution Control District with the following exceptions: There are no episode criteria levels, declaration procedures, notification procedures, source inspections, emission control actions or episode termination procedures for carbon monoxide episodes based on 4- and 8-hour averaging times; communication procedures for transmitting status reports and orders as to emission control actions to be taken during an episode stage are not provided for; there are no provisions for the inspection of those sources covered under Rule 122; there is no time schedule for the Air Pollution Control Officer to initiate the call for the submittal of individual abatement plans; the requirements for the content of the abatement plans are not sufficiently specific to ensure that adequate plans are submitted; no provisions exist for the daily acquisition of atmospheric stagnation conditions; a Priority II particulate matter episode contingency plan is not provided for in the regulation.

(f) Regulation for prevention of air pollution emergency episodes—4- and 8-hour carbon monoxide criteria levels, public announcement, source inspections, preplanned abatement strategies, acquisition of atmospheric stagnation forecasts.

(1) The requirements of this paragraph are applicable in the Sacramento County Air Pollution Control District.

(2) For the purposes of this regulation the following definitions apply:

(i) ''Administrator'' means the Administrator of the Environmental Protection Agency or his authorized representative.

(ii) ''ppm'' means parts per million by volume.

(iii) ''ug/m^3'' means micrograms per cubic meter.

(3) For the purposes of this paragraph, the following episode criteria shall apply:

Pollutant	Averaging time (hours)	Stage 1	Stage 2	Stage 3
Carbon monoxide	4	[1] 25	[1] 45	[1] 60
	8	[1] 15	[1] 30	[1] 40

[1] Parts per million by volume.

(4) The provisions of the Sacramento County Air Pollution Control District's Regulation IX, as submitted on November 4, 1977, relating to carbon monoxide episodes averaged over 1 hour shall apply to carbon monoxide episodes averaged over 4 and 8 hours except that the Administrator shall insure that declaration, notification, source inspections, and termination of such episodes will occur.

(5) Stationary source curtailment plans shall be prepared by business,

commercial, industrial, and governmental establishments as follows:

(i) The owner or operator of any business, commercial, industrial, or governmental facility or activity listed below shall submit to the Administrator plans to curtail or cease operations causing stationary source air contaminants in such activity:

(A) Stationary sources which can be expected to emit 100 tons or more per year of hydrocarbons or carbon monoxide.

(ii) The plans required by paragraph (f)(5)(i)(A) of this section shall include the following information:

(A) The information requested by Regulation IX, Rule 125, section d, as submitted to the EPA on November 4, 1977.

(B) The total number of employees at the facility during each shift on a normal weekday.

(C) The amount of energy (gas, fuel oil, and electricity) used on a normal weekday.

(D) For first-stage episodes, the measures to voluntarily curtail equipment emitting air pollutants.

(E) For second-stage episodes:

(*1*) The measures to curtail, as much as possible, equipment operations that emit air pollutants specific to the type of episode and, in the case of oxidant episodes, the equipment operations that emit hydrocarbons.

(*2*) The measures to postpone operations which can be postponed until after the episode.

(F) For third-stage episodes:

(*1*) A list of equipment, with permit numbers if applicable, which can be shut down without jeopardizing the public health or safety, and an estimate of the resultant reductions in air contaminant emissions.

(*2*) A list of all equipment, with permit numbers if applicable, which must be operated to protect the public health or safety, and an estimate of the air contaminant emissions from such equipment.

(iii) Copies of the stationary source curtailment plans approved in accordance with the provisions of this paragraph shall be on file and readily available on the premises to any person authorized to enforce the provisions of this paragraph.

(6) The owner or operator of any governmental, business, commercial, or industrial activity or facility listed in paragraph (f)(5) of this section shall submit a stationary source curtailment plan to the Administrator within 60 days after promulgation of final rulemaking.

(7) The plans submitted pursuant to the requirements of this paragraph shall be reviewed by the Administrator for approval or disapproval according to the following schedule:

(i) For sources with emissions of hydrocarbons and carbon monoxide greater than or equal to 454 metric tons (500 tons) per year, within 45 days after receipt.

(ii) For sources with emissions of hydrocarbons and carbon monoxide greater than or equal to 91 metric tons (100 tons) per year and less than 454 metric tons (500 tons) per year, within 90 days after receipt.

(iii) For sources with emissions of hydrocarbons and carbon monoxide less than 91 metric tons (100 tons) per year, within 180 days after receipt.

(8) The owner or operator of any industrial, business, governmental, or commercial establishment required to submit a plan by this paragraph shall be notified by the Administrator within 30 days after the plan has been evaluated. Any plan disapproved by the Administrator shall be modified to overcome the disapproval and resubmitted to the Administrator within 30 days of receipt of the notice of disapproval.

(9) A source inspection plan shall be implemented by the Administrator upon the declaration of any episode stage, and the following facilities shall be inspected to ensure compliance:

(i) Those sources covered under Rule 122, as submitted to the EPA on November 4, 1977, as appropriate.

(10) The Administrator shall insure that forecasts of atmospheric stagnation conditions during any episode stage and updating of such forecasts are acquired.

(11) Any source that violates any requirement of this regulation shall be subject to enforcement action under section 113 of the Clean Air Act.

(12) All submittals or notifications required to be submitted to the Administrator by this regulation shall be sent

to: Regional Administrator, Attn: Air and Hazardous Materials Division, Air Technical Branch, Technical Analysis Section (A–4–3) Environmental Protection Agency, 215 Fremont Street, San Francisco, CA 94105.

(g) Regulation for the prevention of air pollution emergency episodes—Priority II particulate matter emergency episode contingency plan.

(1) The requirements of this paragraph are applicable in the Sacramento County Air Pollution Control District.

(2) For the purposes of this paragraph the following episode criteria shall apply:

Pollutant	Averaging time (hours)	Stage 1	Stage 2	Stage 3
Particulate matter	24	[1] 375	[1] 625	[1] 875

[1] Micrograms per cubic meter.

(3) Whenever it is determined that any episode level specified in paragraph (g)(2) of this section is predicted to be attained, is being attained, or has been attained and is expected to remain at such levels for 12 or more hours, the appropriate episode level shall be declared.

(4) Whenever the available scientific and meteorological data indicate that any episode level specified in paragraph (g)(2) of this section is no longer being attained and is not predicted to increase again to episode levels, such episode shall be declared terminated.

(5) The following shall be notified whenever an episode is predicted, attained, or terminated:

(i) Public officials.

(ii) Public health, safety, and emergency agencies.

(iii) News media.

(h) The requirements of Subpart H of this chapter are met in the MBUAPCD which the following exceptions: There is no time schedule to assure that stationary source and traffic curtailment plans are submitted and reviewed in a timely manner; curtailment plans are not sufficiently specific; there are no provisions for the acquisition of forecasts of atmospheric stagnation conditions; and adequate mandatory emission control actions are not specified for Third-Stage oxidant episodes.

(i) Regulation for prevention of oxidant air pollution emergency episodes within the MBUAPCD.

(1) The requirements of this paragraph are applicable in the MBUAPCD.

(2) For the purposes of this regulation the following definitions apply:

(i) ''Administrator'' means the Administrator of the Environmental Protection Agency or his authorized representative.

(ii) ''Major national holiday'' means a holiday such as Christmas, New Year's Day or Independence Day.

(iii) ''Regulation VII'' in this paragraph means Regulation VII, ''Emergencies'', of the MBUAPCD, adopted May 25, 1977, and submitted to the Environmental Protection Agency as a revision to the California State Implementation Plan by the California Air Resources Board on November 4, 1977.

(3) The plans required by Rule 705(a) of Regulation VII shall include the following information in addition to that required in Rule 705(b) of Regulation VII, and shall be submitted and processed as follows:

(i) Stationary sources.

(A) The total number of employees at the facility during each shift:

(*1*) On a normal weekday.

(*2*) On a major national holiday.

(B) The amount and type of fuel used:

(*1*) On a normal weekday.

(*2*) On a major national holiday.

(C) For Third-Stage episodes:

(*1*) A list of equipment and the permit numbers of such equipment not operated on a major national holiday.

(*2*) A statement as to whether or not the facility operates on a major national holiday.

(ii) Indirect sources.

(A) The total number of employees at the facility during each shift:

(*1*) On a normal weekday.

(*2*) On a major national holiday.

(B) The number of motor vehicles and vehicle miles traveled for motor vehicles operated:

(*1*) By the company, on company business, on a normal weekday and on a major national holiday.

(*2*) By employees commuting between home and the place of business on a normal weekday and on a major national holiday.

(C) The number of parking spaces:

(*1*) Available.

(*2*) Normally used on a weekday.

(*3*) Normally used on a major national holiday.

(D) The minimum number of motor vehicles to be operated that are necessary to protect the public health or safety.

(E) For Third-Stage episodes, a statement as to whether or not the facility operates on a major national holiday.

(iii) Each owner or operator required to submit a plan as specified under Rule 705(a) of Regulation VII shall submit such plans within 60 days after promulgation of the final rulemaking.

(iv) The plans submitted in accordance with the provisions of this paragraph shall be approved or disapproved by the Administrator within 120 days after receipt.

(v) Each owner or operator required to submit a plan as specified under Rule 705(a) of Regulation VII shall be notified within 90 days after the Administrator's decision.

(vi) Any plan disapproved by the Administrator shall be modified to overcome this disapproval and resubmitted to the Administrator within 30 days of the notice of disapproval.

(vii) A copy of the plan approved in accordance with the provisions of this paragraph shall be on file and readily available on the premises to any person authorized to enforce the provisions of this section.

(4) The following actions shall be implemented by the Administrator upon declaration of a Third-Stage oxidant episode: the general public, schools, industrial, business, commercial, and governmental activities throughout the MBUAPCD shall operate as though the day were a major national holiday.

(5) The Administrator shall ensure the acquisition of forecasts of atmospheric stagnation conditions during any episode stage and updating of such forecasts.

(j)–(o) [Reserved]

(p) Regulation for prevention of air pollution emergency episodes—requirements for stationary source curtailment plans and particulate matter episodes.

(1) The requirements of this paragraph are applicable in the Los Angeles County, Riverside County, San Bernardino County Desert and Imperial County Air Pollution Control Districts.

(2) For the purposes of this regulation, the following definitions apply:

(i) ''Administrator'' means the Administrator of the Environmental Protection Agency or his authorized representative.

(ii) ''ug/m^3'' means micrograms per cubic meter.

(iii) ''Major national holiday'' means a holiday such as Christmas or New Year's Day.

(3) Stationary source curtailment plans shall be prepared by major stationary sources, as defined by section 169(1) of the Act:

(i) The plans required by this paragraph shall include the following information:

(A) The information requested in the California Air Resources Board's Criteria for Approval of Air Pollution Emergency Abatement Plans (Executive Order G–63).

(B) The total number of employees at the facility during each work shift on a normal weekday and on a major national holiday.

(C) The amount of energy (gas, fuel oil, and electricity) used on a normal weekday and on a major national holiday.

(D) For first-stage episodes:

(*1*) The measures to voluntarily curtail equipment emitting air pollutants.

(E) For second-stage episodes:

(*1*) The measures to curtail, as much as possible, equipment operations that emit air pollutants specific to the type of episode and, in the case of oxidant episodes, the equipment operations that emit hydrocarbons and nitrogen oxides.

(*2*) The measures to postpone operations which can be postponed until after the episode.

(F) For third-stage episodes:

(*1*) A list of equipment, with permit numbers if applicable, which can be shut down without jeopardizing the public health or safety, and an estimate of the resultant reductions in hydrocarbons, nitrogen oxides, and particulate matter emissions.

(*2*) A list of all equipment, with permit numbers if applicable, which must be operated to protect the public health or safety, and an estimate of the

hydrocarbons, nitrogen oxides and particulate matter emissions from such equipment.

(4) A copy of the stationary source curtailment plan approved in accordance with the provisions of this paragraph shall be on file and readily available on the premises to any person authorized to enforce the provisions of this paragraph.

(5) The owner or operator of any governmental, business, commercial, or industrial activity or facility listed in paragraph (p)(3) of this section shall submit a stationary source curtailment plan to the Administrator within 60 days after promulgation of final rulemaking.

(6) The plans submitted pursuant to the requirements of this paragraph shall be reviewed by the Administrator within 90 days.

(7) The owner or operator of any major stationary source required to submit a plan by this paragraph shall be notified by the Administrator within 30 days after the plan has been evaluated as to whether the plan has been approved or disapproved. Any plan disapproved by the Administrator shall be modified to overcome the disapproval and resubmitted to the Administrator within 30 days of receipt of the notice of disapproval.

(8) All submittals or notifications required to be submitted to the Administrator by this regulation shall be sent to:

Regional Administrator, Attn: Air and Hazardous Materials Division, Air Technical Branch, Technical Analysis Section (A–4–3), Environmental Protection Agency, 215 Fremont Street, San Francisco CA 94105.

(9) Any source that violates any requirement of this regulation shall be subject to enforcement action under section 113 of the Act.

(10) For the purposes of this regulation the following episode criteria shall apply to particulate matter episodes:

Pollutant	Averaging time (hours)	μg/m³		
		Stage 1	Stage 2	Stage 3
Particulate matter	24	375	625	875

(q) The requirements of Subpart H of this chapter are met in the Fresno County Air Pollution Control District, with the following exceptions: There are no episode criteria levels, declaration procedures, notification procedures, source inspection procedures, emission control actions, or episode termination procedures for carbon monoxide episodes based on 4- and 8-hour averaging times, or for particulate matter emergency episodes based on 24-hour averaging times; there is no time schedule to initiate the call for the submittal of individual abatement plans; the requirements for the content of the abatement plans are not sufficiently specific to ensure the adequate plans are submitted; there are no provisions for requiring abatement plans from operations which attract large numbers of motor vehicles with their related emissions; the Stage 3 photochemical oxidants (ozone) criterion level equals the Federal significant harm level; there are no provisions for adequate mandatory emission control actions.

(r) Regulation for prevention of air pollution emergency episodes—4- and 8-hour carbon monoxide criteria levels, mandatory emission control actions, preplanned abatement strategies, and a Priority I particulate matter emergency episode contingency plan.

(1) The requirements of this paragraph are applicable in the Fresno County Air Pollution Control District.

(2) For the purposes of this regulation the following definitions apply:

(i) ''Administrator'' means the Administrator of the Environmental Protection Agency or his authorized representative.

(ii) ''ppm'' means parts per million by volume.

(iii) ''μg/m³'' means micrograms per cubic meter.

(iv) ''Major national holiday'' means a holiday such as Christmas or New Year's Day.

(3) For the purposes of this regulation, the following episode criteria shall apply to carbon monoxide episodes:

Pollutant	Averaging time (hours)	Stage 1 (ppm)	Stage 2 (ppm)	Stage 3 (ppm)
Carbon monoxide	4	25	45	60
	8	15	30	40

(4) The provisions of the Fresno County Air Pollution Control District's Regulation VI, as submitted on October 23, 1974, relating to carbon monoxide episodes averaged over 1 hour shall apply to carbon monoxide episodes averaged over 4 and 8 hours except that the Administrator shall insure that declaration procedures, notification procedures, source inspections, and termination of such episodes occur.

(5) Stationary source curtailment plans and traffic abatement plans shall be prepared by business, commercial, industrial, and governmental establishments in Fresno County as follows:

(i) The owner or operator of any business, commercial, industrial, or governmental stationary source which can be expected to emit 100 tons or more per year of carbon monoxide, hydrocarbons, or particulate matter shall submit to the Administrator plans to curtail or cease operations causing stationary source air contaminants in such activity:

(ii) The plans required by paragraph (r)(5)(i) of this section shall include the following information:

(A) The information requested in the California Air Resources Board's ''Criteria for Approval of Air Pollution Emergency Abatement Plans'' (Executive Order G–63).

(B) The total number of employees at the facility during each shift on a normal weekday and on a major national holiday.

(C) The amount of energy (gas, fuel oil, and electricity) used on a normal weekday and on a major national holiday.

(D) For first-stage episodes, the measures to voluntarily curtail equipment emitting air pollutants.

(E) For second-stage episodes:

(*1*) The measures to curtail, as much as possible, equipment operations that emit air pollutants specific to the type of episode and, in the case of oxidant episodes, the equipment operations that emit hydrocarbons or nitrogen oxides.

(*2*) The measures to postpone operations which can be postponed until after the episode.

(F) For third-stage episodes:

(*1*) A list of equipment, with permit numbers if applicable, which can be shut down without jeopardizing the public health or safety, and an estimate of the resultant reductions in carbon monoxide, hydrocarbons, nitrogen oxides, and particulate matter emissions.

(*2*) A list of all equipment, with permit numbers if applicable, which must be operated to protect the public health or safety, and an estimate of the carbon monoxide, hydrocarbons, nitrogen oxides, and particulate matter emissions from such equipment.

(iii) The owner or operator of any industrial, business, commercial, or governmental facility or activity employing more than 100 persons per shift at any one business address shall submit to the Administrator plans to curtail or cease operations causing air contaminants from vehicle use.

(iv) The plans required by paragraph (r)(5)(iii) of this section shall include the following information:

(A) The information requested in the California Air Resources Board's ''Criteria for Approval of Air Pollution Emergency Abatement Plans'' (Executive Order G–63).

(B) The total number of employees at the facility during each shift.

(C) The total number of motor vehicles and vehicle miles traveled for motor vehicles operated:

(*1*) By the company on company business on a normal weekday and a major national holdiay.

(*2*) By employees commuting between home and the place of business on a normal weekday and a major national holiday.

(*3*) The minimum number of motor vehicles to be operated that are necessary to protect public health or safety.

(6) A copy of the stationary source curtailment and/or traffic abatement plans approved in accordance with the provisions of this paragraph shall be on file and readily available on the premises to any person authorized to enforce the provisions of this paragraph.

(7) The owner or operator of any governmental, business, commercial, or industrial activity or facility listed in paragraph (r)(5) of this section shall submit a stationary source curtailment plan and/or traffic abatement plan to

the Administrator within 60 days after promulgation of final rulemaking.

(8) The plans submitted pursuant to the requirements of this paragraph shall be reviewed by the Administrator for approval or disapproval according to the following schedule:

(i) For sources with emissions of hydrocarbons, carbon monoxide, or particulate matter greater than or equal to 454 metric tons (500 tons) per year, or for establishments employing 400 or more employees per shift, within 45 days after receipt.

(ii) For sources with emissions of hydrocarbons, carbon monoxide, or particulate matter greater than or equal to 91 metric tons (100 tons) per year and less than 454 metric tons (500 tons) per year, or for establishments employing more than 200 and less than 400 employees per shift, within 90 days after receipt.

(iii) For establishments employing 100 to 200 employees per shift, within 180 days after receipt.

(9) The owner or operator of any industrial, business, governmental or commercial establishment required to submit a plan by this paragraph shall be notified by the Administrator within 30 days after the plan has been evaluated as to whether the plan has been approved or disapproved. Any plan disapproved by the Administrator shall be modified to overcome the disapproval and resubmitted to the Administrator within 30 days of receipt of the notice of disapproval.

(10) Any source that violates any requirement of this regulation shall be subject to enforcement action under section 113 of the Act.

(11) All submittals or notifications required to be submitted to the Administrator by this regulation shall be sent to:

Regional Administrator, ATTN: Air and Hazardous Materials Division, Air Technical Branch, Technical Analysis Section (A–4–3), Environmental Protection Agency, 215 Fremont Street, San Francisco, CA 94105.

(12) For the purposes of this regulation the following episode criteria shall apply to particulate matter episodes and Stage 3 photochemical oxidants episodes:

Pollutant	Averaging time (hours)	μg/m³		
		Stage 1	Stage 2	Stage 3
Particulate matter	24	375	625	875
Photochemical oxidants ...	1	.....	.....	[1] 0.5

[1] Parts per million.

(13) The Fresno County Air Pollution Control District's Regulation VI, as submitted on October 23, 1974, relating to episodes for carbon monoxide and photochemical oxidants averaged over 1 hour, shall apply to particular matter episodes averaged over 24 hours, except that the Administrator shall insure that declaration procedures, notification procedures, source inspections, and termination of such episodes occur.

(14) The Administrator shall insure that the following actions will be taken in the source and receptor areas on the declaration of a Stage 1, Stage 2 or Stage 3 episode:

(i) For a Stage 1 or Stage 2 episode:

(A) Persons operating any facility or activity named in paragraph (r)(5) of this section shall implement the appropriate plans submitted in accordance with subparagraph (5) of the declared Stage 1 or Stage 2 episode for the appropriate air contaminant(s).

(ii) For a Stage 3 episode:

(A) The general public, schools, industrial, business, commercial, and governmental activities throughout Fresno County shall operate as though the day were a major national holiday.

[43 FR 22721, May 26, 1978]

EDITORIAL NOTE: For FEDERAL REGISTER citations affecting § 52.274, see the List of CFR Sections Affected, which appears in the Finding Aids section of the printed volume and at *www.fdsys.gov*.

§ 52.275 Particulate matter control.

(a) The following rules or portions of rules are retained because they control emissions of particulate matter, and because there is no demonstration that their deletion would not interfere with the attainment and maintenance of the national standards for particulate matter:

(1) Lake County APCD.

(i) Part III–50 and Part V–1B, submitted on October 23, 1974, and previously approved under 40 CFR 52.223.

(2) San Luis Obispo County APCD.

(i) Rule 113, submitted on February 21, 1972, and previously approved under 40 CFR 52.223.

(b) The following regulations are disapproved because they relax the control on particulate matter emissions without any accompanying analyses demonstrating that these relaxations will not interfere with the attainment and maintenance of the National Ambient Air Quality Standards.

(1) Amador County APCD.

(i) Rules 211 and 212, submitted on April 21, 1976. (Regulation V, Rules 13 and 14, submitted on June 30, 1972, and previously approved, are retained.)

(ii) Rules 207 and 212, submitted on October 13, 1977. (The analogous Rules 10 and 14 of Regulation V, submitted on June 30, 1972, and previously approved, are retained and shall remain in effect for Federal enforcement purposes.)

(2) Calaveras County APCD.

(i) Rule 211, submitted on October 13, 1977. (Rule 211, submitted on July 22, 1975, and previously approved, is retained and shall remain in effect for Federal enforcement purposes.)

(3) Del Norte County APCD.

(i) Rules 410(c)(7) and 420(e), submitted on November 10, 1976.

(ii) Rules 420(e) and (f), submitted on November 4, 1977.

(4) El Dorado County APCD.

(i) Rule 212, submitted on April 10, 1975, and Rule 211, submitted on August 2, 1976. (The analogous Rule 55, submitted on February 21, 1972, and previously approved, is retained and shall remain in effect for Federal enforcement purposes.)

(5) Humbolt County APCD.

(i) Rules 410(c)(7) and 420(e), submitted on November 10, 1976.

(ii) Rules 420(e) and (f), submitted on November 4, 1977.

(6) Mariposa County APCD.

(i) Rule 211, submitted on June 6, 1977. (Rule 211, submitted on January 10, 1975, and previously approved, is retained and shall remain in effect for Federal enforcement purposes.)

(7) Mendocino County APCD.

(i) Rule 410(c)(7), submitted on November 10, 1976.

(ii) Rules 420(e) and (f), submitted on November 4, 1977.

(8) Nevada County APCD.

(i) Rule 212, submitted on April 10, 1975, and Rule 211, submitted on April 21, 1976. (Rule 52.1, submitted on June 30, 1972, and previously approved, is retained and shall remain in effect for Federal enforcement purposes.)

(9) Northern Sonoma County APCD.

(i) Rule 420(e), submitted on November 10, 1976.

(ii) Rules 420(e) and (f), submitted on October 13, 1977.

(10) Placer County APCD.

(i) Rule 211, submitted on October 13, 1977. (The analogous Rule 61, submitted on June 30, 1972, and previously approved, is retained and shall remain in effect for Federal enforcement purposes.)

(ii) Rules 202, 207, and 211, submitted on October 15, 1979; and Section 61, and Rules 202 and 207, previously approved in the June 30, 1972, January 10, 1975, and October 13, 1977 submittals, are retained.

(11) Plumas County APCD.

(i) Rule 211, submitted on June 6, 1977. (The analogous Rule 211, submitted on January 10, 1975, and previously approved, is retained and shall remain in effect for Federal enforcement purposes.)

(12) San Luis Obispo County APCD.

(i) Rule 403, submitted on November 10, 1976.

(13) Sierra County APCD.

(i) Rule 211, submitted on June 6, 1977. (The analogous Rule 211, submitted on January 10, 1975, and previously approved, is retained and shall remain in effect for Federal enforcement purposes.)

(14) Trinity County APCD.

(i) Rules 410(c)(7) and 420(e), submitted on November 10, 1976.

(ii) Rules 420(e) and (f), submitted on November 4, 1977.

(c) The following regulations are disapproved because they relax the control on visible emissions without any accompanying analyses demonstrating that these relaxations will not interfere with the attainment and maintenance of the National Ambient Air Quality Standards or any other applicable requirement of the Clean Air Act.

(1) South Coast Air Quality Management District.

(i) Rule 401, submitted on January 12, 1999.

[43 FR 25675, June 14, 1978]

EDITORIAL NOTE: For FEDERAL REGISTER citations affecting § 52.275, see the List of CFR Sections Affected, which appears in the Finding Aids section of the printed volume and at *www.fdsys.gov*.

§ 52.276 Sulfur content of fuels.

(a) The following rules or portions of rules are disapproved since they represent a relaxation of previously submitted regulations and an adequate control strategy demonstration has not been submitted showing that the relaxation will not interfere with the attainment and maintenance of the National Ambient Air Quality Standards:

(1) North Central Coast Intrastate Region:

(i) Monterey Bay Unified APCD.

(A) Rule 412(a)(8), *Sulfur Content of Fuels*, submitted on October 23, 1974.

(b) The deletion of the following rules from the State implementation plan is disapproved since their deletion represents a relaxation of the control strategy, and an adequate demonstration showing that the relaxation will not interfere with the attainment and maintenance of the national ambient air quality standards has not been submitted:

(1) Southeast Desert Intrastate Region:

(i) Imperial County APCD.

(A) Rule 126, Sulfur Contents of Fuels, submitted on June 30, 1972 and previously approved under 40 CFR 52.223.

[42 FR 56606, Oct. 27, 1977, as amended at 43 FR 35695, Aug. 11, 1978]

§ 52.277 Oxides of nitrogen, combustion gas concentration limitations.

(a) The following rules are being retained to the extent that the new rules are less stringent than the previously approved rules:

(1) North Central Coast Intrastate Region:

(i) Monterey Bay Unified APCD.

(A) Rule 404(c) submitted on February 21, 1972 by the Monterey-Santa Cruz Unified APCD and previously approved as part of the SIP, is being retained for sources combusting gaseous fuels. Rule 404(c) will be in effect for Monterey and Santa Cruz Counties only. Rule 404(c), submitted on November 10, 1976 by the Monterey Bay Unified APCD, will only be in effect for sources combusting liquid or solid fuels with heat input rates greater than 1½ billion BTU per hour in the Monterey and Santa Cruz portions of the Unified APCD.

(B) Rule 408(b), submitted on February 21, 1972 by the San Benito County APCD and previously approved as part of the SIP, is being retained for sources combusting liquid, solid, or gaseous fuels with heat input rates less than 1½ billion BTU per hour. Rule 408(b) will be in effect for San Benito County only. Rule 404(c), submitted on November 10, 1976 by the Monterey Bay unified APCD, will only be in effect for sources combusting liquid, solid, or gaseous fuels with heat input rates greater than 1½ billion BTU per hour in the San Benito County portion of the Unified APCD.

[42 FR 56606, Oct. 27, 1977]

§ 52.278 Oxides of nitrogen control.

(a) The following regulations are disapproved because they relax the control of nitrogen oxides emissions without an accompanying analysis demonstrating that this relaxation will not interfere with the attainment and maintenance of the National Ambient Air Quality Standards.

(1) South central coast intrastate AQCR.

(i) San Luis Obispo County APCD.

(A) Rule 405(A)(1), *Nitrogen Oxides Emission Standards Limitations and Prohibitions* submitted on November 10, 1976, is disapproved; and Rule 114(4), *Gaseous Contaminants Oxides of Nitrogen* submitted on February 21, 1972 and previously approved in 40 CFR 52.223, is retained.

[43 FR 34467, Aug. 4, 1978]

§ 52.279 Food processing facilities.

(a) The following regulations are disapproved because they conflict with the requirements of 40 CFR Subpart I [formerly § 51.18], ''Review of new sources and modifications,'' and relax the control on emissions from food processing facilities without any accompanying analyses demonstrating

that these relaxations will not interfere with the attainment and maintenance of the National Ambient Air Quality Standards.

(1) Merced County APCD Rules 210.1–II–J, 210.1–VII–F, 408–C (new sentences two and three), adopted on August 21, 1984, and submitted on October 5, 1984.

(2) Bay Area Air Quality Management District sections 2–2–119, 2–2–120. Adopted on September 19, 1984, and submitted on October 5, 1984.

[52 FR 3646, Feb. 5, 1987, as amended at 55 FR 31835, Aug. 6, 1990]

§ 52.280 Fuel burning equipment.

(a) The following rules and regulations are disapproved because they relax the control on emissions from fuel burning equipment without any accompanying analyses demonstrating that these relaxations will not interfere with the attainment and maintenance of the National Ambient Air Quality Standards.

(1) Mountain Counties Intrastate AQCR:

(i) Amador County APCD.

(A) Rules 209, submitted on April 21, 1976 and October 15, 1979, are disapproved; and Regulation V, Rule 19, previously approved in the June 30, 1972 submittal, is retained.

(B) Rule 210(B)(1), submitted on October 15, 1979, is disapproved; and Rules 11 and 210, previously approved in the June 30, 1972 and April 21, 1976 submittals, are retained.

(ii) Calaveras County APCD.

(A) Rule 209, Fossil Fuel-Steam Generator Facility, submitted on October 13, 1977, is disapproved; and Rule 408, Fuel Burning Equipment, previously approved in the June 30, 1972, submittal, is retained and shall remain in effect for Federal enforcement purposes.

(iii) Tuolumne County APCD.

(A) Rule 210, submitted on October 15, 1979, is disapproved; and Rule 407, previously approved in the June 30, 1972 submittal, is retained.

(iv) Placer County APCD.

(A) Rule 210, submitted on October 15, 1979, is disapproved, and Rule 210, previously approved in the October 13, 1977 submittal, is retained.

(2) Sacramento Valley Intrastate AQCR:

(i) Yolo-Solano APCD.

(A) Rule 2.16, *Fuel Burning Heat or Power Generators*, submitted on July 19, 1974 is disapproved; and Rule 2.16, *Fuel Burning Equipment*, submitted on June 30, 1972 and previously approved as part of the SIP in 40 CFR 52.223, is retained.

(3) Southeast Desert Intrastate AQCR.

(i) San Bernardino County Desert APCD.

(A) Rule 474, *Fuel Burning Equipment—Oxides of Nitrogen*, submitted November 4, 1977, is disapproved. Rule 68 (same title) submitted June 30, 1972 and approved in 40 CFR 52.223 is retained.

(b) The deletion of the following rules or portions of rules from the State implementation plan is disapproved since their deletion represents a relaxation of the control strategy and an adequate demonstration showing that the relaxation will not interfere with the attainment and maintenance of the national ambient air quality standards has not been submitted:

(1) Southeast Desert Intrastate Region:

(i) Imperial County APCD.

(A) Rule 131, Fuel Burning Equipment, submitted on February 21, 1972 and previously approved under 40 CFR 52.223.

(ii) San Bernardino County.

(A) Rule 67, Fuel Burning Equipment as applied to new sources. The emission limit of Rule 67 is retained and is applicable only to existing sources already granted a permit.

(c) The emission limits of Rules 67 and 72 are partially retained, applicable only to (existing) sources granted permits prior to June 17, 1981.

(1) South Coast Air Quality Management District.

(i) Rules 67, *Fuel Burning Equipment*, and 72, *Fuel Burning Equipment*, submitted on November 19, 1979.

[43 FR 25677, 25684 June 14, 1978, as amended at 43 FR 35696, Aug. 11, 1978; 43 FR 51774, Nov. 7, 1978; 43 FR 59490, Dec. 21, 1978; 44 FR 5664, Jan. 29, 1979; 46 FR 3889, Jan. 16, 1981; 46 FR 27116, 27118, May 18, 1981; 47 FR 25016, June 9, 1982]

§ 52.281 Visibility protection.

(a) The requirements of section 169A of the Clean Air Act are not met, because the plan does not include approvable procedures for protection of visibility in mandatory Class I Federal areas.

(b) [Reserved]

(c) Regulations for visibility new source review. The provisions of § 52.27 are hereby incorporated and made part of the applicable plan for the State of California only with respect to:

(1) Mendocino County air pollution control district,

(2) Monterey County air pollution control district,

(3) North Coast Unified air quality management district,

(4) Northern Sonoma County air pollution control district, and

(5) Sacramento County air pollution control district.

(d) The provisions of § 52.28 are hereby incorporated and made part of the applicable plan for the State of California, except for:

(1) Monterey County air pollution control district, and

(2) Sacramento County air pollution control district.

(e) [Reserved]

(f) *Approval*. On March 16, 2009, the California Air Resources Board submitted the ''California Regional Haze Plan'' (''CRHP''). The CRHP, as amended and supplemented on September 8, 2009 and June 9, 2010, meets the requirements of Clean Air Act section 169B and the Regional Haze Rule in 40 CFR 51.308.

(g) *Approval*. On June 16, 2014, the California Air Resources Board submitted the ''California Regional Haze Plan 2014 Progress Report'' (''Progress Report''). The Progress Report meets the requirements of Clean Air Act sections 169A and 169B and the Regional Haze Rule in 40 CFR 51.308.

[50 FR 28553, July 12, 1985, as amended at 52 FR 45138, Nov. 24, 1987; 76 FR 34611, June 14, 2011; 80 FR 17331, Apr. 1, 2015; 82 FR 3129, Jan. 10, 2017]

§ 52.282 Control strategy and regulations: Ozone.

(a) *Attainment determination*. EPA has determined that the Ventura County severe 1-hour ozone nonattainment area attained the 1-hour ozone NAAQS by the applicable attainment date of November 15, 2005. EPA also has determined that the Ventura County severe 1-hour ozone nonattainment area is not subject to the requirements of section 185 of the Clean Air Act (CAA) for the 1-hour standard and that the State is not required to submit a SIP under Section 182(d)(3) of the CAA to implement a section 185 program for the 1-hour standard in this area. In addition, the requirements of section 172(c)(9) (contingency measures) for the 1-hour standard do not apply to the area.

(b) *Approval*. On December 19, 2007, the California Air Resources Board submitted a maintenance plan for the 1997 8-hour ozone NAAQS for the Monterey Bay Area as required by section 110(a)(1) of the Clean Air Act, as amended in 1990, and 40 CFR 51.905(a)(4). Elements of the section 110(a)(1) maintenance plan for ozone include a base year (2002) attainment emissions inventory for ozone, a demonstration of maintenance of the ozone NAAQS with projected emissions inventories through the year 2014 for ozone, a plan to verify continued attainment, and a contingency plan. The maintenance plan meets the Federal requirements of Clean Air Act section 110(a)(1) and 40 CFR 51.905(a)(4) and is approved as a revision to the California State Implementation Plan for the above mentioned area.

(c) *Determination of attainment*. Effective January 4, 2010, EPA is determining that the Imperial County, California 8-hour ozone nonattainment area has attained the 1997 8-hour ozone standard. Under the provisions of EPA's ozone implementation rule (see 40 CFR 51.918), this determination suspends the reasonable further progress and attainment demonstration requirements of section 182(b)(1) and related requirements of section 172(c)(9) of the Clean Air Act for as long as the area does not monitor any violations of the 8-hour ozone standard. If a violation of the 1997 ozone NAAQS is monitored in the Imperial County, California 8-hour ozone nonattainment area, this determination shall no longer apply.

(d) *Determinations that Certain Areas Did Not Attain the 1-Hour Ozone NAAQS*.

EPA has determined that the Los Angeles-South Coast Air Basin Area and the San Joaquin Valley Area extreme 1-hour ozone nonattainment areas did not attain the 1-hour ozone NAAQS by the applicable attainment date of November 15, 2010 and that the Southeast Desert Modified Air Quality Maintenance Area severe-17 1-hour ozone nonattainment area did not attain the 1-hour ozone NAAQS by the applicable attainment date of November 15, 2007. These determinations bear on the areas' obligations with respect to the one-hour ozone standard anti-backsliding requirements whose implementation is triggered by a determination of failure to attain by the applicable attainment date: section 172(c)(9) contingency measures for failure to attain and sections 182(d)(3) and 185 major stationary source fee programs.

(e) *Determinations of attainment.* Effective June 3, 2016.

(1) *Approval of applications for extensions of applicable attainment dates.* Under section 181(a)(5) of the Clean Air Act, the EPA is approving the applications submitted by the California Air Resources Board dated June 1, 2015, referencing the District's letter of May 19, 2015, for extensions of the applicable attainment date for the San Luis Obispo (Eastern San Luis Obispo), CA 2008 8-hour ozone nonattainment areas from July 20, 2015 to July 20, 2016.

(2) *Determinations of attainment.* The EPA has determined that the Calaveras County, Chico (Butte County), San Francisco Bay Area and Tuscan Buttes 2008 8-hour ozone nonattainment areas in California have attained the 2008 8-hour ozone standard by the July 20, 2015 applicable attainment date, based upon complete quality-assured data for 2012–2014. Therefore, the EPA has met its obligation pursuant to CAA section 181(b)(2)(A) to determine, based on the area's air quality data as of the attainment date, whether the area attained the standard. As a result of these determinations, the Calaveras County, Chico (Butte County), San Francisco Bay Area and Tuscan Buttes 2008 8-hour ozone nonattainment areas in California will not be reclassified for failure to attain by their July 20, 2015, applicable attainment date under section 181(b)(2)(A).

(3) *Determinations of attainment.* EPA is determining that the Amador and Calaveras Counties, Chico, Kern County, Mariposa and Tuolumne Counties, Nevada County, Sutter County and Ventura County 8-hour ozone nonattainment areas have attained the 1997 8-hour ozone standard, based upon complete quality-assured data for 2009–2011. Under the provisions of EPA's ozone implementation rule (see 40 CFR 51.918), these determinations suspend the attainment demonstrations and associated reasonably available control measures, reasonable further progress plans, contingency measures, and other planning SIPs related to attainment for as long as the areas continue to attain the 1997 8-hour ozone standard. If EPA determines, after notice-and-comment rulemaking, that any of these areas no longer meets the 1997 ozone NAAQS, the corresponding determination of attainment for that area shall be withdrawn.

(f) *Determination of attainment.* EPA has determined that, as of November 19, 2012, the Sacramento Metro 1-hour ozone nonattainment area has attained the 1-hour ozone standard, based upon complete, quality-assured and certified ambient air quality monitoring data for 2007–2009.

(g) *Determination of attainment.* EPA has determined that, as of May 15, 2015, the Southeast Desert 1-hour ozone nonattainment area has attained the 1-hour ozone standard, based upon complete, quality-assured and certified ambient air quality monitoring data for 2011–2013.

(h) *Determination of attainment.* EPA has determined that, as of August 17, 2016, the San Joaquin Valley 1-hour ozone nonattainment area has attained the 1-hour ozone standard, based upon sufficient, quality-assured and certified ambient air quality monitoring data for 2012–2014.

(i) *Determination of attainment.* The EPA has determined that, as of January 20, 2017, the San Luis Obispo (Eastern San Luis Obispo) 2008 8-hour ozone nonattainment area in California has attained the 2008 ozone standard by the July 20, 2016 applicable attainment date, based upon complete, quality-assured and certified data for 2013–2015.

Therefore, the EPA has met its obligation pursuant to CAA section 181(b)(2)(A) to determine, based on the area's air quality data as of the attainment date, whether the area attained the standard. As a result of this determination, the San Luis Obispo (Eastern San Luis Obispo) 2008 ozone nonattainment area in California will not be reclassified for failure to attain by the July 20, 2016 applicable attainment date under section 181(b)(2)(A).

(j) *Determination of attainment.* The EPA has determined that, as of February 21, 2017, the Mariposa County 2008 8-hour ozone nonattainment area in California has attained the 2008 ozone standard, based upon complete, quality-assured and certified data for 2013–2015. Under the provisions of the EPA's ozone implementation rule (see 40 CFR 51.1118), this determination suspends the requirements for the area to submit attainment demonstrations and associated reasonably available control measures, reasonable further progress plans, contingency measures for failure to attain or make reasonable further progress and other planning SIPs related to attainment of the 2008 ozone standard for as long as the area continues to attain the 2008 ozone standard. If the EPA determines, after notice-and-comment rulemaking, that the Mariposa County ozone nonattainment area no longer meets the 2008 ozone standard, the corresponding determination of attainment for this area shall be withdrawn.

[74 FR 25156, May 27, 2009, as amended at 74 FR 66921, Dec. 17, 2009; 74 FR 63310, Dec. 3, 2009; 76 FR 82146, Dec. 30, 2011; 77 FR 64039, Oct. 18, 2012; 77 FR 71555, Dec. 3, 2012; 80 FR 20167, Apr. 15, 2015; 81 FR 26708, May 4, 2016; 81 FR 46612, July 18, 2016; 81 FR 93621, 93627, Dec. 21, 2016]

§ 52.283 Interstate Transport.

(a) *Approval.* On November 16, 2007, the California Air Resources Board submitted the ''Interstate Transport State Implementation Plan (SIP) for the 1997 8-hour Ozone Standard and $PM_{2.5}$ to satisfy the Requirements of Clean Air Act section 110(a)(2)(D)(i) for the State of California (September 21, 2007)'' (''2007 Transport SIP''). The 2007 Transport SIP and the additional plan elements listed below meet the following specific requirements of Clean Air Act section 110(a)(2)(D)(i) for the 1997 8-hour ozone and 1997 $PM_{2.5}$ NAAQS (''1997 standards'').

(1) The requirements of section 110(a)(2)(D)(i)(II) regarding interference with other states' measures to protect visibility for the 1997 standards are met by chapter 3 (Emissions Inventory), chapter 4 (California 2018 Progress Strategy), and chapter 8 (Consultation) of the ''California Regional Haze Plan,'' adopted January 22, 2009.

(2) The requirements of CAA section 110(a)(2)(D)(i)(I) regarding significant contribution to nonattainment of the 1997 standards in any other State and interference with maintenance of the 1997 standards by any other State.

(3) The requirements of section 110(a)(2)(D)(i)(II) regarding interference with any other state's measures required under title I, part C of the Clean Air Act to prevent significant deterioration of air quality, except that these requirements are not fully met in the Air Pollution Control Districts (APCDs) or Air Quality Management Districts (AQMDs) listed in ths paragraph.

(i) Amador County APCD
(ii) Butte County AQMD
(iii) Calaveras County APCD
(iv) Feather River AQMD
(v) Northern Sierra AQMD
(vi) Mariposa County APCD
(vii) Tuolumne County APCD
(viii) North Coast Unified AQMD
(ix) All other areas in California that are subject to the Federal PSD program as provided in 40 CFR 52.270.

(b) [Reserved]

(c) *2006 $PM_{2.5}$ NAAQS* and *2012 $PM_{2.5}$ NAAQS:* The 2014 Multi-pollutant Infrastructure SIP, submitted on March 6, 2014, and the additional plan elements listed below meet the following specific requirements of Clean Air Act section 110(a)(2)(D)(i) for the 2006 $PM_{2.5}$ NAAQS and 2012 $PM_{2.5}$ NAAQS.

(1) The requirements of section 110(a)(2)(D)(i)(II) regarding interference with any other state's measures required under title I, part C of the Clean Air Act to prevent significant deterioration of air quality, except that these requirements are not fully met in the Air Pollution Control Districts (APCDs) or Air Quality Management

Districts (AQMDs) listed in this paragraph.

(i) [Reserved]

(ii) North Coast APCD (PSD requirements for the regulation of $PM_{2.5}$, $PM_{2.5}$ precursors, condensable $PM_{2.5}$, $PM_{2.5}$ increments, and NO_X as an ozone precursor, only)

(iii) [Reserved]

(iv) South Coast AQMD (PSD requirements for the NAAQS, only).

(v) All other areas in California that are subject to the Federal PSD program as provided in 40 CFR 52.270.

(2) The requirements of section 110(a)(2)(D)(i)(II) regarding interference with other states' measures to protect visibility are met by chapter 3 (Emissions Inventory), chapter 4 (California 2018 Progress Strategy), and chapter 8 (Consultation) of the ''California Regional Haze Plan,'' adopted January 22, 2009.

(d) *2008 ozone NAAQS:* The 2014 Multi-pollutant Infrastructure SIP, submitted on March 6, 2014, and the additional plan elements listed below meet the following specific requirements of Clean Air Act section 110(a)(2)(D)(i) for the 2008 ozone NAAQS.

(1) The requirements of section 110(a)(2)(D)(i)(II) regarding interference with any other state's measures required under title I, part C of the Clean Air Act to prevent significant deterioration of air quality, except that these requirements are not fully met in the Air Pollution Control Districts (APCDs) or Air Quality Management Districts (AQMDs) listed in this paragraph.

(i) [Reserved]

(ii) North Coast APCD (PSD requirements for the regulation of $PM_{2.5}$, $PM_{2.5}$ precursors, condensable $PM_{2.5}$, $PM_{2.5}$ increments, and NO_X as an ozone precursor, only)

(iii) [Reserved]

(iv) South Coast AQMD (PSD requirements for the NAAQS, only).

(v) All other areas in California that are subject to the Federal PSD program as provided in 40 CFR 52.270.

(2) The requirements of section 110(a)(2)(D)(i)(II) regarding interference with other states' measures to protect visibility are met by chapter 3 (Emissions Inventory), chapter 4 (California 2018 Progress Strategy), and chapter 8 (Consultation) of the ''California Regional Haze Plan,'' adopted January 22, 2009.

(e) *2008 Pb NAAQS:* The 2011 Pb Infrastructure SIP, submitted on September 22, 2011, and the 2014 Multi-pollutant Infrastructure SIP, submitted on March 6, 2014, and the additional plan elements listed below meet the following specific requirements of Clean Air Act section 110(a)(2)(D)(i) for the 2008 Pb NAAQS.

(1) The requirements of CAA section 110(a)(2)(D)(i)(I) regarding significant contribution to nonattainment of the 2008 Pb NAAQS in any other State and interference with maintenance of the 2008 Pb NAAQS by any other State.

(2) The requirements of section 110(a)(2)(D)(i)(II) regarding interference with any other state's measures required under title I, part C of the Clean Air Act to prevent significant deterioration of air quality, except that these requirements are not fully met in the Air Pollution Control Districts (APCDs) or Air Quality Management Districts (AQMDs) listed in this paragraph.

(i) [Reserved]

(ii) North Coast APCD (PSD requirements for the regulation of $PM_{2.5}$, $PM_{2.5}$ precursors, condensable $PM_{2.5}$, $PM_{2.5}$ increments, and NO_X as an ozone precursor, only)

(iii) [Reserved]

(iv) South Coast AQMD (PSD requirements for the NAAQS, only).

(v) All other areas in California that are subject to the Federal PSD program as provided in 40 CFR 52.270.

(3) The requirements of section 110(a)(2)(D)(i)(II) regarding interference with other states' measures to protect visibility are met by chapter 3 (Emissions Inventory), chapter 4 (California 2018 Progress Strategy), and chapter 8 (Consultation) of the ''California Regional Haze Plan,'' adopted January 22, 2009.

(f) *2010 NO_2 NAAQS:* The 2012 NO_2 Infrastructure SIP, submitted on November 15, 2012, and the 2014 Multi-pollutant Infrastructure SIP, submitted on March 6, 2014, and the additional plan elements listed below meet the following specific requirements of Clean Air Act section 110(a)(2)(D)(i) for the 2010 NO_2 NAAQS.

(1) The requirements of CAA section 110(a)(2)(D)(i)(I) regarding significant contribution to nonattainment of the 2010 NO_2 NAAQS in any other State and interference with maintenance of the 2010 NO_2 NAAQS by any other State.

(2) The requirements of section 110(a)(2)(D)(i)(II) regarding interference with any other state's measures required under title I, part C of the Clean Air Act to prevent significant deterioration of air quality, except that these requirements are not fully met in the Air Pollution Control Districts (APCDs) or Air Quality Management Districts (AQMDs) listed in this paragraph.

(i) [Reserved]

(ii) North Coast APCD (PSD requirements for the regulation of $PM_{2.5}$, $PM_{2.5}$ precursors, condensable $PM_{2.5}$, $PM_{2.5}$ increments, and NO_X as an ozone precursor, only)

(iii) [Reserved]

(iv) South Coast AQMD (PSD requirements for the NAAQS, only).

(v) All other areas in California that are subject to the Federal PSD program as provided in 40 CFR 52.270.

(3) The requirements of section 110(a)(2)(D)(i)(II) regarding interference with other states' measures to protect visibility are met by chapter 3 (Emissions Inventory), chapter 4 (California 2018 Progress Strategy), and chapter 8 (Consultation) of the ''California Regional Haze Plan,'' adopted January 22, 2009.

(g) *2010 SO_2 NAAQS:* The 2014 Multipollutant Infrastructure SIP, submitted on March 6, 2014, and the additional plan elements listed below meet the following specific requirements of Clean Air Act section 110(a)(2)(D)(i) for the 2010 SO_2 NAAQS.

(1) The requirements of section 110(a)(2)(D)(i)(II) regarding interference with any other state's measures required under title I, part C of the Clean Air Act to prevent significant deterioration of air quality, except that these requirements are not fully met in the Air Pollution Control Districts (APCDs) or Air Quality Management Districts (AQMDs) listed in this paragraph.

(i) [Reserved]

(ii) North Coast APCD (PSD requirements for the regulation of $PM_{2.5}$, $PM_{2.5}$ precursors, condensable $PM_{2.5}$, $PM_{2.5}$ increments, and NO_X as an ozone precursor, only)

(iii) [Reserved]

(iv) South Coast AQMD (PSD requirements for the NAAQS, only).

(v) All other areas in California that are subject to the Federal PSD program as provided in 40 CFR 52.270.

(2) The requirements of section 110(a)(2)(D)(i)(II) regarding interference with other states' measures to protect visibility are met by chapter 3 (Emissions Inventory), chapter 4 (California 2018 Progress Strategy), and chapter 8 (Consultation) of the ''California Regional Haze Plan,'' adopted January 22, 2009.

[76 FR 34611, June 14, 2011, as amended at 76 FR 34876, June 15, 2011; 76 FR 48006, Aug. 8, 2011; 81 FR 18780, Apr. 1, 2016; 81 FR 69392, Oct. 6, 2016; 82 FR 30773, July 3, 2017; 83 FR 14756, Apr. 6, 2018]

Subpart G—Colorado

§ 52.320 Identification of plan.

(a) *Purpose and scope.* This section sets forth the applicable State Implementation Plan for Colorado under section 110 of the Clean Air Act, 42 U.S.C. 7410 and 40 CFR part 51 to meet national ambient air quality standards or other requirements under the Clean Air Act.

(b) *Incorporation by reference.* (1) Material listed in paragraphs (c) and (d) of this section with an EPA approval date prior to June 1, 2015, was approved for incorporation by reference by the Director of the Federal Register in accordance with 5 U.S.C. 552(a) and 1 CFR part 51. Material is incorporated as submitted by the state to EPA, and notice of any change in the material will be published in the FEDERAL REGISTER. Entries for paragraphs (c) and (d) of this section with EPA approval dates after June 1, 2015, will be incorporated by reference in the next update to the SIP compilation.

(2) EPA Region 8 certifies that the rules/regulations provided by EPA in the SIP compilation at the addresses in paragraph (b)(3) of this section are an exact duplicate of the officially promulgated state rules/regulations which have been approved as part of the State Implementation Plan as of June 1, 2015.

(3) Copies of the materials incorporated by reference may be inspected at the Environmental Protection Agency, Region 8, 1595 Wynkoop Street, Denver, Colorado, 80202–1129; Air and Radiation Docket and Information Center, U.S. Environmental Protection Agency, West Building, 1301 Constitution Ave. NW., Washington, DC 20460; and, the National Archives and Records Administration (NARA). For information on the availability of materials from the docket in the EPA Headquarters Library, please call the Office of Air and Radiation (OAR) at (202) 566–1742. For information on the availability of this material at NARA, call (202) 741–6030, or go to *http://www.archives.gov/federal-register/cfr/ibr-locations.html*. Copies of the Colorado regulations we have approved are also available at *http://www.epa.gov/region8/air/sip.html*.

(c) *EPA-approved regulations.*

Title	State effective date	EPA Effective date	Final rule citation/date	Comments
5 CCR 1001–01, Procedural Rules				
State Implementation Plan	3/30/1998	5/10/2012	77 FR 21451, 04/10/12.	
5 CCR 1001–02, Common Provisions Regulation				
I. Definitions, Statement of Intent, and General Provisions Applicable to all Emission Control Regulations adopted by the Colorado Air Quality Control Commission.	1/30/10 12/15/10	2/24/16	81 FR 3963, 1/25/16	Except I.G. Definitions, ''Construction'' and ''Day''
II. General	1/30/10	2/24/16	81 FR 3963, 1/25/16	Except II.I; II.J.5.
5 CCR 1001–03, Regulation Number 1, Emission Control for Particulate Matter, Smoke, Carbon Monoxide, and Sulfur Oxides				
Definitions	10/2/2005	2/17/2012	77 FR 2466, 01/18/12.	
I. Applicability: Referenced Federal Regulations.	10/2/2005	2/17/2012	77 FR 2466, 01/18/12.	
II. Smoke and Opacity	10/2/2005	2/17/2012	77 FR 2466, 01/18/12.	
III. Particulate Matter	10/2/2005	2/17/2012	77 FR 2466, 01/18/12.	
IV. Continuous Emission Monitoring Requirements for New or Existing Sources.	10/2/2005	2/17/2012	77 FR 2466, 01/18/12.	
V. Emission Standards for Existing Iron and Steel Plant Operations.	10/2/2005	2/17/2012	77 FR 2466, 01/18/12.	
VI. Sulfur Dioxide Emission Regulations	10/2/2005	2/17/2012	77 FR 2466, 01/18/12.	
VII. Emission Regulations for Certain Electric Generating Stations Owned and Operated by the Public Service Company of Colorado.	10/2/2005	2/17/2012	77 FR 2466, 01/18/12.	
VIII. Restrictions on the Use of Oil as a Backup Fuel.	10/2/2005	2/17/2012	77 FR 2466, 01/18/12.	
IX. Emission Regulations Concerning Areas Which Are Nonattainment for Carbon Monoxide—Refinery Fluid Bed Catalytic Cracking Units:	10/2/2005	2/17/2012	77 FR 2466, 01/18/12.	
Appendix A, Method of Measuring Opacity from Fugitive Particulate Emission Sources.	5/30/1982	1/2/1987	51 FR 43609, 12/03/86.	
Appendix B, Method of Measurement of Off-Property Transport of Fugitive Particulate Emissions.	5/30/1982	1/2/1987	51 FR 43609, 12/03/86.	
5 CCR 1001–05, Regulation Number 3, Part A, Concerning General Provisions Applicable to Reporting and Permitting				
I. Applicability	12/15/2010 12/15/2011 2/15/2013	2/24/16	81 FR 3963, 1/25/16	Except I.B.31.c. and I.B.31.d.
II. Air Pollutant Emission Notice (APEN) Requirements.	10/15/2014	11/13/2017	82 FR 47380, 10/12/2017.	
III. Administrative Permit Amendment Procedures.	4/30/2008	3/17/2014	79 FR 8632, 02/13/14.	
IV. Operational Flexibility	4/30/2008	3/17/2014	79 FR 8632, 02/13/14.	
V. Certification and Trading of Emission Reduction Credits Offset and Netting Transactions.	12/15/2010 2/15/2013	2/24/16	81 FR 3963, 1/25/16.	

Title	State effective date	EPA Effective date	Final rule citation/date	Comments
VI. Fees	12/15/2010 2/15/2013	2/24/16	81 FR 3963, 1/25/16.	
VII. Confidential Information or Data Contained in Air Pollutant Emission Notices, Permit Applications, or Reports Submitted Pursuant to Part C, Section V.C.6.	4/30/2008	3/17/2014	79 FR 8632, 02/13/14.	
VIII. Technical Modeling and Monitoring Requirements.	12/15/2010	2/24/16	81 FR 3963, 1/25/16.	
Appendix A, Method for Determining De Minimis Levels For Non-Criteria Reportable Pollutants.	10/15/2014	11/13/2017	82 FR 47380, 10/12/2017.	
Appendix B, Non-criteria Reportable Pollutants (Sorted by BIN).	12/15/2010 2/15/2013	2/24/16	81 FR 3963, 1/25/16.	
5 CCR 1001–05, Regulation Number 3, Part B, Concerning Construction Permits				
I. Applicability	4/30/2008	3/17/2014	79 FR 8632, 02/13/14.	
II. General Requirements for Construction Permits.	12/15/2010 12/15/2011	2/24/16	81 FR 3963, 1/25/16.	
III. Construction Permit Review Procedures	10/15/2014	11/13/2017	82 FR 47380, 10/12/2017.	
5 CCR 1001–05, Regulation Number 3, Part D, Concerning Major Stationary Source New Source Review and Prevention of Significant Deterioration				
I. Applicability	12/15/2010 2/15/2013	2/24/16	81 FR 3963, 1/25/16.	
II. Definitions	10/15/2014	11/13/2017	82 FR 47380, 10/12/2017.	Except II.A.26.d., the phrase "and only $PM_{2.5}$ emissions can be used to evaluate the net emissions increase for $PM_{2.5}$"
III. Permit Review Procedures	12/15/2011	2/24/16	81 FR 3963, 1/25/16.	
IV. Public Comment Requirements	4/30/2008	3/17/2014	79 FR 8632, 02/13/14.	
V. Requirements Applicable to Nonattainment Areas.	12/15/2011 2/15/2013	2/24/16	81 FR 3963, 1/25/16.	
VI. Requirements applicable to attainment and unclassifiable areas and pollutants implemented under Section 110 of the Federal Act (Prevention of Significant Deterioration Program).	10/15/2014	11/13/2017	82 FR 47380, 10/12/2017.	Except for VI.A.1.c., the phrase "for phases that commence construction more than 18 months after the initial granting of the permit"; VI.A.2., the phrase "either Section VI.A.2.a. or b., as clarified for any relevant air pollutant, in Section VI.B.3.a.(iii) in reference to $PM_{2.5}$ monitoring exemption; and VI.B.3.d.
VII. Negligibly Reactive Volatile Organic Compounds (NRVOCs).	4/30/2008	3/17/2014	79 FR 8632, 02/13/14.	
VIII. Area Classifications	4/30/2008	3/17/2014	79 FR 8632, 02/13/14.	
IX. Redesignation	4/30/2008	3/17/2014	79 FR 8632, 02/13/14.	
X. Air Quality Limitations	12/15/2011	2/24/16	81 FR 3963, 1/25/16.	
XI. Exclusions From Increment Consumption	4/30/2008	3/17/2014	79 FR 8632, 02/13/14.	
XII. Innovative Control Technology	4/30/2008	3/17/2014	79 FR 8632, 02/13/14.	
XIII. Federal Class I Areas	12/15/2011	2/24/16	81 FR 3963, 1/25/16.	
XIV. Visibility	12/15/2010	2/24/16	81 FR 3963, 1/25/16.	
XV. Actuals PALs	12/15/2010	2/24/16	81 FR 3963, 1/25/16.	

Title	State effective date	EPA Effective date	Final rule citation/date	Comments
5 CCR 1001–05, Regulation Number 3, Part F, Regional Haze Limits—Best Available Retrofit Technology (BART) and Reasonable Progress (RP)				
VI. Regional Haze Determinations	2/14/2011	1/30/2013	77 FR 76871, 12/31/12.	
VII. Monitoring, Recordkeeping, and Reporting for Regional Haze Limits.	2/14/2011	1/30/2013	77 FR 76871, 12/31/12.	
5 CCR 1001–06, Regulation Number 4, New Wood Stoves and the Use of Certain Woodburning Appliances During High Pollution Days				
I. Definitions	8/30/1993	5/19/1997	62 FR 18716, 04/17/97.	
II. Requirements for Sale and Installation of Wood Stoves.	8/30/1993	5/19/1997	62 FR 18716, 04/17/97.	
III. Approval Procedure for Pellet Stoves	8/30/1993	5/19/1997	62 FR 18716, 04/17/97.	
IV. Enforcement	8/30/1993	5/19/1997	62 FR 18716, 04/17/97.	
V. List of Certified Wood Stoves	8/30/1993	5/19/1997	62 FR 18716, 04/17/97.	
VI. High Pollution Days	8/30/1993	5/19/1997	62 FR 18716, 04/17/97.	
VII. Requirements for Installation of Fireplaces.	8/30/1993	5/19/1997	62 FR 18716, 04/17/97.	
VIII. Implementation of Local Control Strategies.	8/30/1993	5/19/1997	62 FR 18716, 04/17/97.	
IX. References	8/30/1993	5/19/1997	62 FR 18716, 04/17/97.	
5 CCR 1001–08, Regulation Number 6, Standards of Performance for New Stationary Sources				
IV. Standards of Performance for New Sources of Sulfur Dioxide.	3/30/1981	1/6/1982	46 FR 59536, 12/07/81.	
5 CCR 1001–09, Regulation Number 7, Control of Ozone Via Ozone Precursors (Emissions of Volatile Organic Compounds and Nitrogen Oxides)				
I. Applicability	1/30/2009	9/6/2011	76 FR 47443, 08/05/11.	Except sections I.A.1.b, I.B.1.b, I.B.2.b, I.B.2.d
II. General Provisions	1/30/2009	9/6/2011	76 FR 47443, 08/05/11.	Except sections II.A.12, II.C.1, and II.D.
III. General Requirements for Storage and Transfer of Volatile Organic Compounds.	1/30/2009	9/6/2011	76 FR 47443, 08/05/11.	
IV. Storage of Highly Volatile Organic Compounds.	1/30/2009	9/6/2011	76 FR 47443, 08/05/11.	
V. Disposal of Volatile Organic Compounds	1/30/2009	9/6/2011	76 FR 47443, 08/05/11.	
VI. Storage and Transfer of Petroleum Liquid	1/30/2009	9/6/2011	76 FR 47443, 08/05/11.	
VII. Crude Oil	1/30/2009	9/6/2011	76 FR 47443, 08/05/11.	
VIII. Petroleum Processing and Refining	1/30/2009	9/6/2011	76 FR 47443, 08/05/11.	
IX. Surface Coating Operations	1/30/2009	9/6/2011	76 FR 47443, 08/05/11.	
X. Use of Solvents for Degreasing and Cleaning.	1/30/2009	9/6/2011	76 FR 47443, 08/05/11.	
XI. Use of Cutback Asphalt	1/30/2009	9/6/2011	76 FR 47443, 08/05/11.	
XII. Volatile Organic Compound Emissions From Oil and Gas Operations.	3/4/2007	3/4/2007	73 FR 8194, 02/13/08.	
XIII. Graphic Arts	1/30/2009	9/6/2011	76 FR 47443, 08/05/11.	
XIV. Pharmaceutical Synthesis	1/30/2009	9/6/2011	76 FR 47443, 08/05/11.	
XV. Control of Volatile Organic Compound Leaks from Vapor Collection Systems and Vapor Control Systems Located at Gasoline Terminals, Gasoline Bulk Plants, and Gasoline Dispensing Facilities.	1/30/2009	9/6/2011	76 FR 47443, 08/05/11.	

Title	State effective date	EPA Effective date	Final rule citation/date	Comments
XVI. Control of Emissions from Stationary and Portable Engines in the 8-Hour Ozone Control Area.	1/30/2009	9/6/2011	70 FR 48652, 08/05/11.	
XVII.E.3.a., (Regional Haze SIP) Rich Burn Reciprocating Internal Combustion Engines.	2/14/2011	1/30/2013	77 FR 76871, 12/31/12.	
Appendix A. Criteria for Control of Vapors from Gasoline Transfer to Storage Tanks.	10/30/1989	6/29/1995	60 FR 28055, 05/30/95.	
Appendix B. Criteria for Control of Vapors from Gasoline Transfer at Bulk Plants (Vapor Balance System).	10/30/1989	6/20/1995	60 FR 28055, 05/30/95.	
Appendix C. Minimum Cooling Capacities for Refrigerated Freeboard Chillers on Vapor Degreasers.	5/22/1980	4/13/1981	46 FR 16687, 03/13/81.	
Appendix D. Test Procedures for Annual Pressure/Vacuum Testing of Gasoline Transport Tanks.	10/30/1989	6/29/1995	60 FR 28055, 05/30/95.	
Appendix E. Emission Limit Conversion Procedure.	10/30/1989	6/29/1995	60 FR 28055, 05/30/95.	
5 CCR 1001–12, Regulation Number 10, Criteria for Analysis of Transportation Conformity				
I. Requirement to Comply with the Federal Rule.	1/30/2012	4/3/2014	79 FR 12079, 03/04/14.	
II. Definitions	3/30/2016	5/7/2018	83 FR 14757, 4/6/2018.	
III. Interagency Consultation	3/30/2016	5/7/2018	83 FR 14757, 4/6/2018.	
IV. Emission reduction credit for certain control measures.	1/30/2012	4/3/2014	79 FR 12079, 03/04/14.	
V. Enforceability of design concept and scope and project-level mitigation and control measures.	1/30/2012	4/3/2014	79 FR 12079, 03/04/14.	
5 CCR 1001–13, Regulation Number 11, Motor Vehicle Emissions Inspection Program—Part A, General Provisions, Area of Applicability, Schedules for Obtaining Certification of Emissions Control, Definitions, Exemptions, and Clean Screening/Remote Sensing				
I. Applicability	2/15/2013 12/30/2013	11/21/2016	81 FR 72720, 10/21/2016.	
II. Definitions	8/30/2007 2/15/2013	11/21/2016	81 FR 72720, 10/21/2016.	
III. Exemption from Section 42–4–314, C.R.S. for Department of Defense Personnel Participating in the Privately Owned Vehicle Import Control Program.	5/31/2004	9/19/2005	70 FR 48652, 08/19/05.	
IV. Clean Screen/Remote Emissions Sensing	2/15/2013	11/21/2016	81 FR 72720, 10/21/2016.	
5 CCR 1001–13, Regulation Number 11, Motor Vehicle Emissions Inspection Program—Part B, Standards and Procedures for the Approval, Operation, Gas Span Adjustment, Calibration and Certification of the Division Approved Test Analyzer Systems for Use in the Basic and Enhanced Areas and Test Analyzer Systems for Licensed Dealers in the Enhanced Area				
I. Approval of the Colo '94 Test Analyzer Systems.	5/31/2004	9/19/2005	70 FR 48652, 08/19/05.	
II. Application for Approval of Colo '94 Test Analyzer Systems Equipment Manufacturers.	5/31/2004	9/19/2005	70 FR 48652, 08/19/05.	
III. Performance and Design Specification for the Colo '94 Exhaust Gas Analyzers.	5/31/2004	9/19/2005	70 FR 48652, 08/19/05.	
IV. Span Gases For Use With Colo '94 Test Analyzer Systems.	5/31/2004	9/19/2005	70 FR 48652, 08/19/05.	
V. Documentation, Logistics, and Warranty Requirements.	5/31/2004	9/19/2005	70 FR 48652, 08/19/05.	
VI. Calibration of Colorado '94 Test Analyzer Systems.	5/31/2004	9/19/2005	70 FR 48652, 08/19/05.	
VII. Approval of the Colorado Automobile Dealers Transient Mode Test Analyzer System.	5/31/2004	9/19/2005	70 FR 48652, 08/19/05.	
VIII. Applications for Approval of the Colorado Automobile Dealers Transient Mode Test Analyzer System.	5/31/2004	9/19/2005	70 FR 48652, 08/19/05.	

Title	State effective date	EPA Effective date	Final rule citation/date	Comments
IX. Approval of the Colorado On-Board Diagnostic (OBD) Test Analyzer System.	2/15/2013	11/21/2016	81 FR 72720, 10/21/2016.	
X. The Colorado On-Board Diagnostics (OBD) Test Analyzer System.	2/15/2013	11/21/2016	81 FR 72720, 10/21/2016.	
5 CCR 1001–13, Regulation Number 11, Motor Vehicle Emissions Inspection Program—Part C, Inspection Procedures and Requirements for Exhaust Emissions, Fuel Evaporation Control, Visible Smoke Emissions, Emissions Control Systems, On-Board Diagnostics (OBD); and Practices to Ensure Proper Emissions Related Adjustments and Repairs				
I. Pre-inspection Requirements	2/15/2013	11/21/2016	81 FR 72720, 10/21/2016.	
II. Exhaust Emissions Inspection Procedures	2/15/2013	11/21/2016	81 FR 72720, 10/21/2016.	
III. Emissions Control Systems Inspection Procedures.	2/15/2013	11/21/2016	81 FR 72720, 10/21/2016.	
IV. On-Board Diagnostic II Inspection Procedures.	2/15/2013	11/21/2016	81 FR 72720, 10/21/2016.	
V. Evaporative Fuel Control Inspection Procedures.	2/15/2013	11/21/2016	81 FR 72720, 10/21/2016.	
VI. Free Reinspection	5/31/2004	9/19/2005	70 FR 48652, 08/19/05.	
VII. Repair Information	5/31/2004	9/19/2005	70 FR 48652, 08/19/05.	
VIII. Certification of Emissions Control	2/15/2013 12/30/2013	11/21/2016	81 FR 72720, 10/21/2016.	
IX. Adjustment Procedures	2/15/2013	11/21/2016	81 FR 72720, 10/21/2016.	
X. Emissions Related Repairs	2/15/2013	11/21/2016	81 FR 72720, 10/21/2016.	
XI. Engine Changes	5/31/2004	9/19/2005	70 FR 48652, 08/19/05.	
XII. Clean Screen Inspection Program Procedures.	8/30/2007	11/21/2016	81 FR 72720, 10/21/2016.	
5 CCR 1001–13, Regulation Number 11, Motor Vehicle Emissions Inspection Program—Part D, Qualification and Licensing of Emissions Mechanics, Emissions Inspectors and Clean Screen Inspectors; Licensing of Emissions Inspection and Readjustment Stations, Inspection-Only Stations, Inspection-Only Facilities, Fleets, Motor Vehicle Dealer Test Facilities and Enhanced Inspection Centers; Qualification of Clean Screen Inspection Sites; and Registration of Emissions Related Repair Facilities and Technicians				
I. Licensing of Emissions Inspection and Readjustment Stations, Inspection-Only Stations, Inspection-Only Facilities, Enhanced Inspection Centers, Fleet Inspection Stations and Motor Vehicle Dealer Test Facilities.	5/31/2004	9/19/2005	70 FR 48652, 08/19/05.	
II. Qualification and Licensing of Emission Mechanics, and Emissions Inspectors.	5/31/2004	9/19/2005	70 FR 48652, 08/19/05.	
III. Registration of Emissions Related Repair Facilities.	5/31/2004	9/19/2005	70 FR 48652, 08/19/05.	
IV. Requirements for Clean Screen/Remote Sensing Sites.	5/31/2004	9/19/2005	70 FR 48652, 08/19/05.	
V. Qualification of Clean Screen Emissions Inspectors.	5/31/2004	9/19/2005	70 FR 48652, 08/19/05.	
VI. Requalification Requirements for all Clean Screen Emissions Inspectors.	5/31/2004	9/19/2005	70 FR 48652, 08/19/05.	
VII. Transmittal of Letters of Qualification and Issuance of Clean Screen Inspector Licenses.	5/31/2004	9/19/2005	70 FR 48652, 08/19/05.	
VIII. Lapse of Certificate of Qualification for Clean Screen Inspector.	5/31/2004	9/19/2005	70 FR 48652, 08/19/05.	
IX. Program License Application Performance Review Criteria.	5/31/2004	9/19/2005	70 FR 48652, 08/19/05.	

Title	State effective date	EPA Effective date	Final rule citation/date	Comments
5 CCR 1001–13, Regulation Number 11, Motor Vehicle Emissions Inspection Program—Part E, Prohibited Acts and Penalties to Ensure Proper Inspection Procedures, Adherence to Prescribed Procedures and Effective Emissions Related Repairs				
I. The Grounds Upon Which The License Of An Emissions Mechanic, Emissions Inspector Or Any Type Of AIR Program Inspection Business May Be Suspended, For A Period Of Time Not Less Than Six Months, Or Revoked.	5/31/2004	9/19/2005	70 FR 48652, 08/19/05.	
5 CCR 1001–13, Regulation Number 11, Motor Vehicle Emissions Inspection Program—Part F, Maximum Allowable Emissions Limits for Motor Vehicle Exhaust, Evaporative and Visible Emissions for Light-Duty and Heavy-Duty Vehicles				
I. The Idle Short Test Concentration Limits For Light-Duty Vehicles And Heavy-Duty Trucks Specified In Sections I (A) And II (A) Respectively Of This Part F Are Those Necessary To Comply With Emissions Reductions As The Program Matures.	5/31/2004	9/19/2005	70 FR 48652, 08/19/05.	
II. Heavy-Duty Vehicles (1978 and Earlier Greater Than 6000 lbs. GVWR) Subject to Idle Short Test(s).	5/31/2004	9/19/2005	70 FR 48652, 08/19/05.	
III. Transient Test Mass Emissions Limits In Grams/Mile (GPM).	1/30/2006	1/22/2013	77 FR 75388, 12/20/12.	
IV. Evaporative Emissions Control Standards	5/31/2004	9/19/2005	70 FR 48652, 08/19/05.	
V. Visible Smoke	2/15/2013	11/21/2016	81 FR 72720, 10/21/2016.	
VI. Clean Screen Program Maximum Allowable Emissions Limits.	8/30/2007	11/21/2016	81 FR 72720, 10/21/2016.	
VII. On-Board Diagnostic Inspection Passing Criteria.	2/15/2013	11/21/2016	81 FR 72720, 10/21/2016.	
5 CCR 1001–13, Regulation Number 11, Appendices				
Appendix A, Specifications for Colorado 94 Analyzer.	8/30/2007 12/30/2013	11/21/2016	81 FR 72720, 10/21/2016.	
Appendix B, Standards and Specifications for the Suppliers of Span and Calibration Gases.	12/30/2013	11/21/2016	81 FR 72720, 10/21/2016.	
5 CCR 1001–14, Emission Budgets for Nonattainment Areas in the State of Colorado				
Budgets	8/30/1995	4/30/1998	63 FR 15294, 03/31/98.	
5 CCR 1001–18, Regulation Number 16, Street Sanding Emissions				
I. Street Sanding Materials Specifications	4/19/2001	10/16/2002	67 FR 58335, 09/16/02.	
II. Street Sanding Requirements Specific to the Denver PM–10 Attainment/Maintenance Area.	4/19/2001	10/16/2002	67 FR 58335, 09/16/02.	
5 CCR 1001–20, Nonattainment-Attainment/Maintenance Areas				
I. Pagosa Springs Attainment/Maintenance Area.	5/30/2000	8/14/2001	66 FR 32556, 06/15/01.	
II. Telluride Attainment/Maintenance Area	5/30/2000	8/14/2001	66 FR 32556, 06/15/01.	
III. Aspen/Pitkin County PM–10 Attainment/Maintenance Area.	2/28/2001	7/14/2003	68 FR 26212, 05/15/03.	
IV. Lamar Attainment/Maintenance Area	12/30/2001	11/25/2005	70 FR 61563, 10/25/05.	
V. Canon City PM–10 Nonattainment Area	12/30/1993	2/13/1995	59 FR 64332, 12/14/94.	
VIII. Steamboat Springs PM_{10} Attainment/Maintenance Area.	11/24/2004	12/30/2001	69 FR 62210, 10/25/04.	

(d) *EPA-approved source-specific requirements.*

Title	State effective date	EPA effective date	Final rule citation/date	Comments
Long-Term Strategy Review and Revision of Colorado's State Implementation Plan for Class I Visibility Protection: Part I: Hayden Station Requirements.	8/15/1996	2/18/1997	62 FR 2305, 01/16/97.	
Revision of Colorado's State Implementation Plan for Class I Visibility Protection Craig Station Units 1 and 2 Requirements.	4/19/2001	8/6/2001	66 FR 35374, 07/05/01.	

(e) *EPA-approved nonregulatory provisions.*

Title	State effective date	EPA effective date	Final rule citation/date	Comments
Legislation				
Concerning Air Pollution Control, and, in connection therewith, revising the Air Program to comply with requirements of the Federal ''Clean Air Act Amendments of 1990''.	7/1/1993	12/8/1994	59 FR 55584, 11/08/94.	
Concerning Legislative Procedures for the Approval of State Implementation Plans and Regulations Related to Air Pollution.	5/31/1995	4/30/1998	63 FR 15294, 03/31/98.	
Maintenance Plans				
Aspen				
Revised PM_{10} Maintenance Plan for the Aspen Attainment/Maintenance Area.	12/16/2010	11/18/2013	78 FR 57496, 09/19/13.	
Canon City				
PM_{10} Maintenance Plan for Canon City	11/20/2008	9/9/2013	78 FR 41307, 07/10/13.	
Colorado Springs				
Colorado Springs Carbon Monoxide Maintenance Plan.	12/17/2009	9/30/2013	78 FR 46521, 08/01/13.	
Denver Metropolitan Area				
1982 Denver Regional Element of the State Air Quality Implementation Plan.	3/4/2001	10/11/2001	66 FR 47086, 09/11/01.	
Carbon Monoxide Maintenance Plan for the Denver Metropolitan Area.	8/30/2003	11/15/2004	69 FR 55752, 09/16/04.	
Ozone Redesignation Request and Maintenance Plan for the Denver Metropolitan Area.	1/11/2001	10/11/2001	66 FR 47086, 09/11/01.	
PM_{10} Redesignation Request and Maintenance Plan For the Denver Metropolitan Area.	4/19/2001	10/16/2002	67 FR 58335, 09/16/02.	
Revision to the Colorado State Implementation Plan: Concerning the removal of the Colorado Clean Vehicle Fleet Program from the SIP, and the adoption of a replacement program.	3/1/2000	1/14/2002	66 FR 64751, 12/14/01.	
Early Action Compact Ozone Action Plan	5/31/2004	9/19/2005	70 FR 48652, 08/19/05.	
Fort Collins				
Revised Carbon Monoxide Maintenance Plan, Fort Collins Attainment/Maintenance Area.	12/16/2010	11/12/2013	78 FR 56164, 09/12/13.	

Title	State effective date	EPA effective date	Final rule citation/date	Comments
Greeley				
Greeley Carbon Monoxide Maintenance Plan	12/17/2009	10/1/2013	78 FR 46816, 08/02/13.	
Lamar				
PM_{10} Redesignation Request and Maintenance Plan for the Lamar Area.	12/30/2001	11/25/2005	70 FR 61563, 10/25/05.	
Longmont				
Revised Carbon Monoxide Maintenance Plan for the Longmont Attainment/Maintenance Area.	3/1/2004	11/29/2004	69 FR 58264, 09/30/04.	
Pagosa Springs				
Final Revised PM_{10} Maintenance Plan for the Pagosa Springs Attainment/Maintenance Area.	11/19/2009	4/9/2014	79 FR 13256, 03/10/14.	
Steamboat Springs				
Revised PM_{10} Maintenance Plan for theSteamboat Springs Attainment/Maintenance Area.	1/30/2012	3/23/2015	80 FR 2827, 01/21/15.	
Telluride				
Revised PM_{10} Attainment/Maintenance Plan Telluride Attainment/Maintenance Area.	11/19/2009	3/13/2014	79 FR 8090, 02/11/14.	
Local Ordinances/Resolutions				
Adopting the Fort Collins Better Air Campaign for Inclusion in the Fort Collins Element of the State Implementation Plan for Air Quality.	9/5/1989	6/17/1991	56 FR 15499, 04/17/91.	
Visibility				
State Implementation Plan for Class I Visibility Protection, State of Colorado.	11/19/1987	10/11/1988	53 FR 30428, 08/12/88.	
Long-Term Strategy Review and Revision of Colorado's State Implementation Plan for Class I Visibility Protection, Part II: Revision of the Long-Term Strategy.	11/18/2004	12/4/2006	71 FR 64465, 11/02/06.	

[80 FR 58209, Sept. 28, 2015, as amended at 81 FR 3966, Jan. 25, 2016; 81 FR 21468, Apr. 12, 2016; 81 FR 72722, Oct. 21, 2016; 82 FR 47382, Oct. 12, 2017; 83 FR 14758, Apr. 6, 2018]

§ 52.321 Classification of regions.

The revised Denver Emergency Episode Plan, adopted by the State of Colorado February 28, 1996, was submitted by the Governor of Colorado with a September 16, 1997 letter.

Air quality control region	Pollutant				
	Particulate matter	Sulfur oxides	Nitrogen dioxide	Carbon monoxide	Ozone
Pawnee Intrastate	I	III	III	III	III
Metropolitan Denver Intrastate	I	III	III	I	I
Comanche Intrastate	III	III	III	III	III

Air quality control region	Pollutant				
	Particulate matter	Sulfur oxides	Nitrogen dioxide	Carbon monoxide	Ozone
San Isabel Intrastate	I	III	III	III	III
San Luis Intrastate	III	III	III	III	III
Four Corners Interstate	IA	IA	III	III	III
Grand Mesa Intrastate	III	III	III	III	III
Yampa Intrastate	III	III	III	III	III

[37 FR 10855, May 31, 1972, as amended at 39 FR 16346, May 8, 1974; 44 FR 57409, Oct. 5, 1979; 74 FR 47891, Sept. 18, 2009]

§ 52.322 Extensions.

The Administrator, by authority delegated under section 188(d) of the Clean Air Act, as amended in 1990, extends for one year (until December 31, 1995) the attainment date for the Denver, Colorado, PM–10 nonattainment area.

[60 FR 52315, Oct. 6, 1995]

§ 52.323 Approval status.

(a) With the exceptions set forth in this subpart, the Administrator approves Colorado's plan for the attainment and maintenance of the national standards under section 110 of the Clean Air Act. Furthermore, the Administrator finds that the plan satisfies all requirements of Part D, Title 1, of the Clean Air Act as amended in 1977, except as noted below.

(b)(1) Insofar as the Prevention of Significant Deterioration (PSD) provisions found in this subpart apply to stationary sources of greenhouse gas (GHGs) emissions, the Administrator approves that application only to the extent that GHGs are ''subject to regulation'', as provided in this paragraph (b), and the Administrator takes no action on that application to the extent that GHGs are not ''subject to regulation.''

(2) Beginning January 2, 2011, the pollutant GHGs is subject to regulation if:

(i) The stationary source is a new major stationary source for a regulated NSR pollutant that is not GHGs, and also will emit or will have the potential to emit 75,000 tpy CO_2e or more; or

(ii) The stationary source is an existing major stationary source for a regulated NSR pollutant that is not GHGs, and also will have an emissions increase of a regulated NSR pollutant, and an emissions increase of 75,000 tpy CO_2e or more; and

(3) Beginning July 1, 2011, in addition to the provisions in paragraph (b)(2) of this section, the pollutant GHGs shall also be subject to regulation:

(i) At a new stationary source that will emit or have the potential to emit 100,000 tpy CO_2e; or

(ii) At an existing stationary source that emits or has the potential to emit 100,000 tpy CO_2e, when such stationary source undertakes a physical change or change in the method of operation that will result in an emissions increase of 75,000 tpy CO_2e or more.

(4) For purposes of this paragraph (b)—

(i) the term greenhouse gas shall mean the air pollutant defined in 40 CFR 86.1818–12(a) as the aggregate group of six greenhouse gases: Carbon dioxide, nitrous oxide, methane, hydrofluorocarbons, perfluorocarbons, and sulfur hexafluoride.

(ii) the term tpy CO_2 equivalent emissions (CO_2e) shall represent an amount of GHGs emitted, and shall be computed as follows:

(A) Multiplying the mass amount of emissions (tpy), for each of the six greenhouse gases in the pollutant GHGs, by the gas's associated global warming potential published at Table A–1 to subpart A of 40 CFR part 98—Global Warming Potentials.

(B) Sum the resultant value from paragraph (b)(4)(ii)(A) of this section for each gas to compute a tpy CO_2e.

(iii) the term emissions increase shall mean that both a significant emissions increase (as calculated using the procedures in paragraphs I.A.2. through I.A.3, and I.B of Part D of Colorado's Air Quality Commission's Regulation Number 3) and a significant

net emissions increase (as defined in paragraphs II.A.26 and II.A.42.a of Part D of Colorado's Air Quality Commission's Regulation Number 3) occur. For the pollutant GHGs, an emissions increase shall be based on tpy CO_2e, and shall be calculated assuming the pollutant GHGs is a regulated NSR pollutant, and ''significant'' is defined as 75,000 tpy CO_2e instead of applying the value in paragraph II.A.42.b of Part D of Colorado's Air Quality Commission's Regulation Number 3.

[75 FR 82553, Dec. 30, 2010]

§ 52.324 Legal authority.

(a) The requirements of § 51.230(f) of this chapter are not met since the State lacks the authority to require owners or operators of stationary sources to install, maintain, and use emission monitoring devices and to make periodic reports to the State on the nature and amounts of emissions from such stationary sources.

(b) Delegation of authority: Pursuant to section 114 of the Act, Colorado requested a delegation of authority to enable it to require sources to install and maintain monitoring equipment and to report periodically on the nature and amount of their emissions. The Administrator has determined that Colorado is qualified to receive a delegation of the authority it requested. Accordingly, the Administrator delegates to Colorado his authority under section 114(a)(1)(B) and (C) of the Act, i.e., authorityto require sources within the State of Colorado to install and maintain monitoring equipment and to report periodically on the nature and amount of their emissions.

[37 FR 10855, May 31, 1972, as amended at 46 FR 24182, Apr. 30, 1981; 51 FR 40676, Nov. 7, 1986; 62 FR 2914, Jan. 21, 1997]

§ 52.325 [Reserved]

§ 52.326 Area-wide nitrogen oxides (NO_X) exemptions.

The Denver Regional Council of Governments (DRCOG) submitted a NO_X exemption petition to the EPA on May 25, 1994 and submitted supporting documentation via a letter dated August 1, 1994. This petition requested that the Denver metropolitan area, a transitional ozone nonattainment area, be exempted from the requirement to meet the NO_X provisions of the Federal transportation and general conformity rule with respect to ozone. The exemption request was based on monitoring data which demonstrated that the National Ambient Air Quality Standard for ozone had been attained in this area for the 3 years prior to the petition. The EPA approved this exemption request on July 28, 1995.

[60 FR 40291, Aug. 8, 1995]

§§ 52.327–52.328 [Reserved]

§ 52.329 Rules and regulations.

(a) On January 14, 1993, the Governor of Colorado submitted revisions to the State's nonattainment new source review permitting regulations to bring the State's regulations up to date with the 1990 Amendments to the Clean Air Act. With these revisions, the State's regulations satisfy the part D new source review permitting requirements for the following nonattainment areas: the Canon City, Lamar, Pagosa Springs, Aspen, Telluride, and Steamboat Springs moderate PM_{10} nonattainment areas, the Denver/Metro Boulder, Longmont, Colorado Springs, and Fort Collins moderate carbon monoxide nonattainment areas, the Greeley not classified carbon monoxide nonattainment area, and the Denver transitional ozone nonattainment area.

(b) On January 14, 1993 and on August 25, 1994, the Governor of Colorado submitted revisions to the State's nonattainment new source review permitting regulations to bring the State's regulations up to date with the 1990 Amendments to the Clean Air Act. With these revisions, the State's regulations satisfy the part D new source review permitting requirements for the Denver metropolitan moderate PM–10 nonattainment area.

(c) A revision to the State Implementation Plan was submitted by the State of Colorado on July 31, 2002. The submittal revises the Common Provisions regulation by adding affirmative defense provisions for source owners and operators for excess emissions during periods of startup and shutdown. The affirmative defense provisions are contained in section II.J. As indicated in 40 CFR 52.320(c)(109), EPA approved the

affirmative defense provisions contained in sections II.J.1 through II.J.4 of the Common Provisions regulation, adopted August 16, 2001 and effective September 30, 2001. Section II.J.5 of the Common Provisions regulation, adopted August 16, 2001 and effective September 30, 2001, is disapproved.

(d) On August 7, 2007, the Colorado submitted two packages with revisions to Colorado's Regulation 3 Regulation, 5 CCR 1001–5, Part A. One change adopts language to treat nitrogen dioxide as an ozone precursor. The State also adopted an increase in fees used to pay for the State's increased workload from the processing of Air Pollutant Emission Notices (APENs) and permits. Annual and permit processing fees shall be $16.54 for regulated pollutants and $114.96 for Hazardous Air Pollutants. One grammatical change was made to the text of Part A, Section 1.B.9.d:

(1) Regulation 3, 5 CCR 1001–5, Air Contaminant Emissions Notices, Part A, Concerning General Provisions Applicable to Reporting and Permitting, Section I, Applicability, Section I.B.9.d, Applicable Requirement, effective October 2006: Any standard or other requirement under section 112 of the Federal Act (hazardous air pollutants, including any requirement concerning accident prevention under section 112(r)(7) of the Federal Act) (Regulation No. 8) but not including the contents of any risk management plan required under section 112(r) of the Federal Act.

(2) Regulation 3, 5 CCR 1001–5, Air Contaminant Emissions Notices, Part A, Concerning General Provisions Applicable to Reporting and Permitting, Section I, Applicability, Section I.B.16, Criteria Pollutants, effective October 2006:

(i) Those pollutants for which the U.S. EPA has established national ambient air quality standards, including: carbon monoxide, nitrogen dioxide (direct emissions and as a precursor to ozone), sulfur dioxide, PM10, total suspended particulate matter, ozone, volatile organic compounds (as a precursor to ozone), and lead.

(ii) For the purpose of Air Pollutant Emission Notice reporting, criteria pollutants shall also include nitrogen oxides, fluorides, sulfuric acid mist, hydrogen sulfide, total reduced sulfur, reduced sulfur compounds, municipal waste combustor organics, municipal waste combustor metals, and municipal waste combustor acid gases.

(3) Regulation 3, 5 CCR 1001–5, Air Contaminant Emissions Notices, Part A, Concerning General Provisions Applicable to Reporting and Permitting, Section VI Fees; Section VI.D.1, Fee Schedule, effective February 2007: Annual and permit processing fees shall be charged in accordance with and in the amounts specified in the provisions of Colorado Revised Statues section 25–7–114.7. Annual fees for regulated pollutants shall be $16.54. Annual fees for hazardous air pollutants shall be $114.96.

(e) The State of Colorado submitted revisions on September 16, 1997, June 20, 2003, July 11, 2005, August 8, 2006 and August 1, 2007 to Colorado's 5 CCR 1001–5 Regulation Number 3, Part A, Section II. One of the revisions deleted two provisions from Section II and moved them to Section I of Regulation Number 3, Part A. The revised regulatory provisions read as follows:

(1) 5 CCR 1001–5, Regulation 3, *Stationary Source Permitting and Air Pollutant Emission Notice Requirements*, Part A, *Concerning General Provisions Applicable to Reporting and Permitting*, Section I, *Applicability*, Section I.B.16, *Criteria Pollutants,;* effective June 30, 2004:

(i) Those pollutants for which the U.S. EPA has established national ambient air quality standards, including: carbon monoxide, nitrogen dioxide, sulfur dioxide, PM_{10}, total suspended particulate matter, ozone, volatile organic compounds (as a precursor to ozone), and lead. For the purposes of Air Pollutant Emission Notice reporting, criteria pollutants shall also include nitrogen oxides, fluorides, sulfuric acid mist, hydrogen sulfide, total reduced sulfur, reduced sulfur compounds, municipal waste combustor organics, municipal waste combustor metals, and municipal waste combustor acid gases.

(2) 5 CCR 1001–5, Regulation 3, *Stationary Source Permitting and Air Pollutant Emission Notice Requirements*, Part

A, *Concerning General Provisions Applicable to Reporting and Permitting*, Section I, *Applicability*, Section I.B.43, *Uncontrolled Actual Emissions;* effective June 30, 2004:

(i) The annual emission rate corresponding to the annual process rate listed on the Air Pollutant Emission Notice form, without consideration of any emission control equipment or procedures. The division may allow a source to forego calculating or estimating its uncontrolled actual emissions of hazardous air pollutants upon a showing by the source and a determination by the division that the creation of such data is unreasonably costly, technically impractical or not reasonably related to information necessary for making regulatory decisions with respect to that source. The division's final determination may be appealed to the commission by the source.

(f) On August 8, 2006, Dennis E. Ellis, Executive Director of the Colorado Department of Public Health and Environment, and on behalf of the Governor, submitted revisions to 5 CCR 1001–13, Colorado's Regulation Number 11—Motor Vehicle Emissions Inspection Program, part F, section III.A.2. These revisions removed from Colorado's Regulation Number 11 the light duty vehicle emission testing limits that went into effect on January 1, 2006 for 1996 and newer model year vehicles. These revisions were adopted on November 17, 2005, and became state-effective on January 30, 2006. The revised version of section III.A.2, as approved by EPA, reads as follows:

(1) The following emissions standards shall apply to those tests performed on model year 1996 and newer vehicles, on and after January 1, of the dates specified:

Calendar year	HC	CO	NO_X
2002	1.2	20	3.0
2003	1.2	20	3.0

[59 FR 64336, Dec. 14, 1994, as amended at 62 FR 2914, Jan. 21, 1997; 62 FR 68195, Dec. 31, 1997; 71 FR 8961, Feb. 22, 2006; 76 FR 51905, Aug. 19, 2011; 76 FR 61056, Oct. 3, 2011; 77 FR 75390, Dec. 20, 2012]

§ 52.330 Control strategy: Total suspended particulates.

(a) *Part D—Conditional Approval:* The Pueblo plan is approved assuming the State demonstrates by December 31, 1981, through air quality modeling, attainment of the 24-hour and annual standards, while considering emissions from all sources in the nonattainment area. In addition, the State must repromulgate Regulation No. 1 to satisfy reasonably available control technology requirements in accordance with the following schedule:

(1) The Commission will consider and adopt for public hearing any changes or additions to Regulation No. 1 by February 15, 1981.

(2) The proposed regulations will be published in the Colorado Register by March 10, 1981.

(3) Public hearing will be held by May 14, 1981.

(4) Regulations will be approved with an effective date no later than July 1, 1981, and submitted to EPA by the same date.

[46 FR 26302, May 12, 1981]

§ 52.331 Committal SIP for the Colorado Group II PM_{10} areas.

On April 14, 1989, the Governor submitted a Committal SIP for the Colorado Group II PM_{10} areas. The SIP commits the State to continue to monitor for PM_{10}, report data and to submit a full SIP if a violation of the PM_{10} National Ambient Air Quality Standards is detected.

[54 FR 43178, Oct. 23, 1989]

§ 52.332 Control strategy: Particulate matter.

(a) On April 9, 1992, the Governor of Colorado submitted the moderate PM–10 nonattainment area plan for the Canon City area. The submittal was made to satisfy those moderate PM–10 nonattainment area SIP requirements which were due for Canon City on November 15, 1991.

(b)(1) On February 24, 1992, and December 9, 1993, the Governor of Colorado submitted the moderate PM–10 nonattainment area plan for the Pagosa Springs area. The submittal was made to satisfy those moderate

PM–10 nonattainment area SIP requirements which were due for Pagosa Springs on November 15, 1991.

(2) On August 2, 1996, the Governor of Colorado submitted minor revisions to the Pagosa Springs Element of the Colorado PM–10 SIP.

(c) On May 27, 1993, the Governor of Colorado submitted the moderate PM–10 nonattainment area plan for the Lamar area. The submittal was made to satisfy those moderate PM–10 nonattainment area SIP requirements which were due for Lamar on November 15, 1991.

(d) On December 9, 1993, the Governor of Colorado submitted PM_{10} contingency measures for the moderate PM_{10} nonattainment areas of Canon City, Lamar, and Pagosa Springs. The submittal was made to satisfy the moderate PM_{10} nonattainment area requirements for contingency measures due for Canon City, Lamar, and Pagosa Springs on November 15, 1993.

(e)(1) On January 15, 1992, March 17, 1993, and December 9, 1993, the Governor of Colorado submitted the moderate PM–10 nonattainment area plan for the Aspen area. The submittals were made to satisfy those moderate PM–10 nonattainment area SIP requirements which were due for Aspen on November 15, 1991. The December 9, 1993 submittal was also made to satisfy the PM–10 contingency measure requirements which were due for Aspen on November 15, 1993.

(2) On March 13, 1995, the Governor of Colorado submitted minor revisions to the Aspen Element of the Colorado PM–10 SIP.

(f) On March 30, 1995, and November 17, 1995, the Governor of Colorado submitted the moderate PM_{10} nonattainment area plan for the Denver area. The March 30, 1995 submittal was made to satisfy those moderate PM_{10} nonattainment area SIP requirements due for the Denver PM_{10} nonattainment area on November 15, 1991. The November 17, 1995 submittal was also made to satisfy the PM_{10} contingency measure requirements which were due for Denver on November 15, 1993.

(g) On March 17, 1993, December 9, 1993, and April 22, 1996, the Governor of Colorado submitted the moderate PM_{10} nonattainment area plan for Telluride. The submittals were made to satisfy those moderate PM_{10} nonattainment area SIP requirements which were due for Telluride on November 15, 1991. The December 9, 1993 submittal was also made to satisfy the PM_{10} contingency measure requirements which were due for Telluride on November 15, 1993.

(h) On September 16, 1997 the Governor of Colorado submitted the moderate PM_{10} nonattainment area plan for Steamboat Springs. The submittal was made to satisfy those moderate PM_{10} nonattainment area SIP requirements which were due for Steamboat Springs on July 20, 1995.

(i) On September 22, 1997, the State of Colorado submitted a maintenance plan for the Canon City PM10 nonattainment area and requested that the area be redesignated to attainment for the PM10 National Ambient Air Quality Standards. An April 24, 2000 letter from Margie Perkins, Director, Colorado Air Pollution Control Division, to Richard Long, Director, EPA Region VIII Air and Radiation Program, was sent to clarify the requirements of the contingency plan section of the Canon City maintenance plan. The redesignation request and maintenance plan satisfy all applicable requirements of the Clean Air Act.

(j) On May 10, 2000, the State of Colorado submitted maintenance plans for the Telluride and Pagosa Springs PM_{10} nonattainment areas and requested that these areas be redesignated to attainment for the PM_{10} National Ambient Air Quality Standards. The redesignation requests and maintenance plans satisfy all applicable requirements of the Clean Air Act.

(k) *Determination*—EPA has determined that the Steamboat Springs PM_{10} ''moderate'' nonattainment area attained the PM_{10} national ambient air quality standard by December 31, 2000. This determination is based on air quality monitoring data from 1998, 1999, and 2000.

(l) On July 30, 2001, the State of Colorado submitted a maintenance plan for the Denver PM_{10} nonattainment area (''PM–10 Redesignation Request and Maintenance Plan For the Denver Metropolitan Area,'' Chapter 4: ''Maintenance Plan,'' adopted April 19, 2001 by

the Colorado Air Quality Control Commission and effective April 19, 2001) and requested that the area be redesignated to attainment for the PM_{10} National Ambient Air Quality Standards. The redesignation request and maintenance plan satisfy all applicable requirements of the Clean Air Act.

(m) On November 9, 2001, the State of Colorado submitted a maintenance plan for the Aspen PM_{10} nonattainment area and requested that this area be redesignated to attainment for the PM_{10} National Ambient Air Quality Standards. The redesignation request and maintenance plan satisfy all applicable requirements of the Clean Air Act.

(n) On July 31, 2002, the State of Colorado submitted a maintenance plan for the Steamboat Springs PM_{10} nonattainment area and requested that this area be redesignated to attainment for the PM_{10} National Ambient Air Quality Standards. The redesignation request and maintenance plan satisfies all applicable requirements of the Clean Air Act.

(o) On July 31, 2002, the State of Colorado submitted a maintenance plan for the Lamar PM_{10} nonattainment area and requested that this area be redesignated to attainment for the PM_{10} National Ambient Air Quality Standards. The redesignation request and maintenance plan satisfy all applicable requirements of the Clean Air Act.

(p) *Revisions to the Colorado State Implementation Plan*, PM10 Revised Maintenance Plan for Denver, as adopted by the Colorado Air Quality Control Commission on December 15, 2005, State effective on March 2, 2006, and submitted by the Governor's designee on September 25, 2006. The revised maintenance plan satisfies all applicable requirements of the Clean Air Act.

(q) Revisions to the Colorado State Implementation Plan, PM_{10} Revised Maintenance Plan for Cañon City, as adopted by the Colorado Air Quality Control Commission on November 20, 2008, State effective on December 30, 2008, and submitted by the Governor's designee on June 18, 2009. The revised maintenance plan satisfies all applicable requirements of the Clean Air Act.

(r) Revisions to the Colorado State Implementation Plan, PM_{10} Revised Maintenance Plan for Aspen, as adopted by the Colorado Air Quality Control Commission on December 16, 2010, State effective on March 1, 2011, and submitted by the Governor's designee on May 25, 2011. The revised maintenance plan satisfies all applicable requirements of the Clean Air Act.

(s) Revisions to the Colorado State Implementation Plan, PM_{10} Revised Maintenance Plan for Telluride, as adopted by the Colorado Air Quality Control Commission on November 19, 2009, State effective on December 30, 2009, and submitted by the Governor's designee on March 31, 2010. The revised maintenance plan satisfies all applicable requirements of the Clean Air Act.

(t) Revisions to the Colorado State Implementation Plan, Final Revised PM_{10} Maintenance Plan for the Pagosa Springs Attainment/Maintenance Area, as adopted by the Colorado Air Quality Control Commission on November 19, 2009, and submitted by the Governor's designee on March 31, 2010. The revised maintenance plan satisfies all applicable requirements of the Clean Air Act.

(u) Revisions to the Colorado State Implementation Plan, PM_{10} Revised Maintenance Plan for Steamboat Springs, as adopted by the Colorado Air Quality Control Commission on December 15, 2011, State effective on January 30, 2012, and submitted by the Governor's designee on May 11, 2012. The revised maintenance plan satisfies all applicable requirements of the Clean Air Act.

[58 FR 68038, Dec. 23, 1993]

EDITORIAL NOTE: For FEDERAL REGISTER citations affecting § 52.332, see the List of CFR Sections Affected, which appears in the Finding Aids section of the printed volume and at *www.fdsys.gov*.

§§ 52.333–52.342 [Reserved]

§ 52.343 Significant deterioration of air quality.

(a) The requirements of sections 160 through 165 of the Clean Air Act are not met for the following categories of sources for preventing the significant deterioration of air quality:

(1) Sources locating on Indian lands.

(2) Sources locating on Indian Reservations.

(3) Sources which constructed prior to September 2, 1986 and which have

not otherwise subjected themselves to Colorado's PSD permitting regulations after September 2, 1986, either through application to Colorado for a PSD permit (in the case of those sources which improperly constructed without obtaining a PSD permit) or through application to Colorado for a major modification to the source.

(b) Regulations for preventing significant deterioration of air quality. The provisions of § 52.21 except paragraph (a)(1) are hereby incorporated and made a part of the applicable State plan for the State of Colorado for the sources identified in paragraph (a) of this section as not meeting the requirements of sections 160–165 of the Clean Air Act.

(c) The State of Colorado has clarified the generalized language contained in the Colorado Air Quality Control Regulations on the use of ''applicable air quality models.'' In a letter to Douglas M. Skie, EPA, dated May 19, 1989, Bradley J. Beckham, Director of the Air Pollution Control Division stated:

* * * All PSD permits reviewed by the Division will use the revised modeling guideline mentioned above [Guideline on Air Quality Models (Revised), EPA 450/2–78–027R including Supplement A (July 1987)] for determining if the air quality models, data bases, and other requirements are generally approved by EPA. Any future revisions (including appendices or supplement) will be incorporated into the Division's protocol for reviewing modeling for PSD permits.

[51 FR 31126, Sept. 2, 1986, and 52 FR 4622, Feb. 13, 1987, as amended at 52 FR 22638, June 15, 1987; 54 FR 27881, July 3, 1989; 57 FR 27000, June 17, 1992; 59 FR 42506, Aug. 18, 1994; 62 FR 2914, Jan. 21, 1997; 62 FR 13336, Mar. 20, 1997; 68 FR 11322, Mar. 10, 2003; 68 FR 74488, Dec. 24, 2003]

§ 52.344 Visibility protection.

(a) A revision to the SIP was submitted by the Governor on December 21, 1987, for visibility general plan requirements, monitoring, and long-term strategies.

(b) The Visibility NSR regulations are approved for industrial source categories regulated by the NSR and PSD regulations which have previously been approved by EPA. However, Colorado's NSR and PSD regulations have been disapproved for certain sources as listed in 40 CFR 52.343(a)(1). The provisions of 40 CFR 52.28 are hereby incorporated and made a part of the applicable plan for the State of Colorado for these sources.

[50 FR 28553, July 12, 1985, as amended at 52 FR 45137, Nov. 24, 1987; 53 FR 30431, Aug. 12, 1988; 53 FR 48539, Dec. 1, 1988; 59 FR 51379, Oct. 11, 1994; 82 FR 3129, Jan. 10, 2017]

§ 52.345 Stack height regulations.

The State of Colorado has committed to revise its stack height regulations should EPA complete rulemaking to respond to the decision in *NRDC* v. *Thomas*, 838 F. 2d 1224 (DC Cir. 1988). In a letter to Mr. Douglas M. Skie, EPA, dated May 9, 1988, Bradley J. Beckham, Director of the Colorado Air Pollution Control Division stated:

* * * We are submitting this letter to allow EPA to continue to process our current SIP submittal with the understanding that if EPA's response to the NRDC remand modified the July 8, 1985, regulations, EPA will notify the state of the rules that must be changed to comply with the EPA's modified requirements. The State of Colorado agrees to make appropriate changes.

[54 FR 24340, June 7, 1989]

§ 52.346 Air quality monitoring requirements.

In a letter and submittal dated July 7, 1993, from the Governor of Colorado to the EPA Region VIII Administrator, the State submitted a revised Air Quality Monitoring State Implementation Plan. The plan was adopted by the State on March 18, 1993, and completely replaces the previous version of the Air Quality Monitoring plan as identified at 40 CFR 52.320 (c)(17). The revisions updated the plan to bring it into conformance with the Federal requirements for air quality monitoring as found in 40 CFR part 58. The State commits to meet these Federal requirements.

[58 FR 49435, Sept. 23, 1993]

§ 52.347 [Reserved]

§ 52.348 Emission inventories.

(a) The Governor of the State of Colorado submitted the 1990 carbon monoxide base year emission inventories for the Colorado Springs, Denver/

Longmont, and Fort Collins nonattainment areas on December 31, 1992, as a revision to the State Implementation Plan (SIP). The Governor submitted revisions to the Colorado Springs and Fort Collins inventories by a letter dated March 23, 1995. The Governor submitted revisions to the Denver/Longmont inventory by letters dated July 11, 1994, and October 21, 1994. The inventories address emissions from point, area, on-road mobile, and non-road sources. These 1990 base year carbon monoxide inventories satisfy the requirements of section 187(a)(1) of the Clean Air Act for each of these nonattainment areas.

(b) On September 16, 1997, the Governor of Colorado submitted the 1993 Carbon Monoxide Periodic Emission Inventories for Colorado Springs, Denver, Fort Collins, and Longmont as revisions to the Colorado State Implementation Plan. These inventories address carbon monoxide emissions from stationary point, area, non-road mobile, and on-road mobile sources.

(c) On September 16, 1997, the Governor of Colorado submitted the 1990 Carbon Monoxide Base Year Emission Inventory for Greeley as a revision to the Colorado State Implementation Plan. This inventory addresses carbon monoxide emissions from stationary point, area, non-road, and on-road mobile sources.

(d) On May 10, 2000, the Governor of Colorado submitted the 1996 Carbon Monoxide Periodic Emission Inventories for Denver and Fort Collins, as a revision to the Colorado State Implementation Plan. The inventories address carbon monoxide emissions from stationary point, area, non-road mobile, and on-road mobile sources.

[61 FR 67469, Dec. 23, 1996, as amended at 63 FR 38089, July 15, 1998; 64 FR 11782, Mar. 10, 1999; 65 FR 63548, Oct. 24, 2000]

§ 52.349 Control strategy: Carbon monoxide.

(a) Revisions to the Colorado State Implementation Plan, Carbon Monoxide Redesignation Request and Maintenance Plan for Greeley, as adopted by the Colorado Air Quality Control Commission on September 19, 1996, State effective November 30, 1996, and submitted by the Governor on September 16, 1997.

(b) On June 25, 1996, the Governor of Colorado submitted a revision to the Colorado Springs element of the carbon monoxide (CO) portion of the Colorado State Implementation Plan (SIP). The revision to the Colorado Springs element was submitted to satisfy certain requirements of part D and section 110 of the Clean Air Act (CAA) as amended 1990. The revision substitutes Colorado's oxygenated gasoline program for the Colorado Springs bus purchase program as a source of emissions reductions credits in the Colorado Springs CO element of the SIP. This revision removes the bus purchase program from the EPA-approved SIP. EPA originally approved the bus purchase program as part of the Colorado Springs CO element of the SIP on December 12, 1983 (48 FR 55284).

(c) Revisions to the Colorado State Implementation Plan, Carbon Monoxide Redesignation Request and Maintenance Plan for Colorado Springs, as adopted by the Colorado Air Quality Control Commission on January 15, 1998, State effective March 30, 1998, and submitted by the Governor on August 19, 1998. The Maintenance Plan removes the Clean Air Campaign from the SIP. The Clean Air Campaign was approved into the SIP at 40 CFR 52.320(c)(43)(i)(A).

(d) Revisions to the Colorado State Implementation Plan, Carbon Monoxide Redesignation Request and Maintenance Plan for Longmont, as adopted by the Colorado Air Quality Control Commission on December 18, 1997, State effective March 2, 1998, and submitted by the Governor on August 19, 1998.

(e) Revisions to the Colorado State Implementation Plan, Carbon Monoxide Revised Maintenance Plan for Colorado Springs, as adopted by the Colorado Air Quality Control Commission on February 17, 2000, State effective April 30, 2000, and submitted by the Governor on May 10, 2000.

(f) *Determination*. EPA has determined that the Denver carbon monoxide ''serious'' nonattainment area attained the carbon monoxide national ambient air quality standard by December 31, 2000. This determination is

based on air quality monitoring data from 1998, 1999, and 2000.

(g) Revisions to the Colorado State Implementation Plan, carbon monoxide NAAQS Redesignation Request and Maintenance Plan for Denver entitled ''Carbon Monoxide Redesignation Request and Maintenance Plan for the Denver Metropolitan Area, ''excluding Chapter 1, Chapter 2, and Appendix C, as adopted by the Colorado Air Quality Control Commission on January 10, 2000, State effective March 1, 2000, and submitted by the Governor on May 10, 2000.

(h) Revisions to the Colorado State Implementation Plan, carbon monoxide NAAQS Redesignation Request and Maintenance Plan for Fort Collins entitled ''Carbon Monoxide Redesignation Request and Maintenance Plan for the Fort Collins Area,'' excluding Part I—Chapter 1 and Part I—Chapter 2, as adopted by the Colorado Air Quality Control Commission on July 18, 2002, State effective September 30, 2002, and submitted by the Governor on August 9, 2002.

(i) Revisions to the Colorado State Implementation Plan, revised Carbon Monoxide Maintenance Plan for Denver, as adopted by the Colorado Air Quality Control Commission on June 19, 2003, State effective on August 30, 2003, and submitted by the Governor on October 15, 2003.

(j) Revisions to the Colorado State Implementation Plan, carbon monoxide NAAQS, revised maintenance plan for Colorado Springs entitled ''Revised Carbon Monoxide Maintenance Plan for the Colorado Springs Attainment/Maintenance Area'', as adopted by the Colorado Air Quality Control Commission on December 18, 2003, State effective March 1, 2004, and submitted by the Governor on April 12, 2004.

(k) Revisions to the Colorado State Implementation Plan, carbon monoxide NAAQS, revised maintenance plan for Longmont entitled ''Revised Carbon Monoxide Maintenance Plan for the Longmont Attainment/Maintenance Area'', as adopted by the Colorado Air Quality Control Commission on December 18, 2003, State effective March 1, 2004, and submitted by the Governor on April 12, 2004.

(l) Revisions to the Colorado State Implementation Plan entitled ''Revised Carbon Monoxide Maintenance Plan for the Greeley Attainment/Maintenance Area,'' as adopted by the Colorado Air Quality Control Commission on December 19, 2002, and submitted by the Governor on June 20, 2003.

(m) Revisions to the Colorado State Implementation Plan, revised Carbon Monoxide Maintenance Plan for Denver, as adopted by the Colorado Air Quality Control Commission on December 15, 2005, State effective on March 2, 2006, and submitted by the Governor's designee on September 25, 2006.

(n) Revisions to the Colorado State Implementation Plan, revised Carbon Monoxide Maintenance Plan for Longmont, as adopted by the Colorado Air Quality Control Commission on December 15, 2005, State effective on March 2, 2006, and submitted by the Governor's designee on September 25, 2006.

(o) Revisions to the Colorado State Implementation Plan, revised Carbon Monoxide Maintenance Plan for Colorado Springs, as adopted by the Colorado Air Quality Control Commission on December 17, 2009 and submitted by the Governor's designee on March 31, 2010.

(p) Revisions to the Colorado State Implementation Plan, revised Carbon Monoxide Maintenance Plan for Greeley, as adopted by the Colorado Air Quality Control Commission on December 17, 2009 and submitted by the Governor's designee on March 31, 2010.

(q) Revisions to the Colorado State Implementation Plan, revised Carbon Monoxide Maintenance Plan for Fort Collins, as adopted by the Colorado Air Quality Control Commission on December 16, 2010 and submitted by the Governor's designee on May 25, 2011.

[64 FR 11782, Mar. 10, 1999]

EDITORIAL NOTE: For FEDERAL REGISTER citations affecting § 52.349, see the List of CFR Sections Affected, which appears in the Finding Aids section of the printed volume and at *www.fdsys.gov*.

§ 52.350 Control strategy: Ozone.

(a) Revisions to the Colorado State Implementation Plan, 1-hour ozone NAAQS Redesignation Request and

Maintenance Plan for Denver entitled ''Ozone Redesignation Request and Maintenance Plan for the Denver Metropolitan Area,'excluding Chapter 1 and Appendix B, as adopted by the Colorado Air Quality Control Commission on January 11, 2001, State effective March 4, 2001, and submitted by the Governor on May 7, 2001.

(b) Revisions to the Colorado State Implementation Plan, 8-hour ozone NAAQS Early Action Compact plan for the metropolitan Denver area entitled ''Early Action Compact Ozone Action Plan,'' excluding sections entitled ''Introduction'' and ''Ozone Monitoring Information,'' as adopted by the Colorado Air Quality Control Commission on March 12, 2004, and submitted by the Governor to us on July 21, 2004.

(c) Revisions to the Colorado State Implementation Plan for the 1997 8-hour ozone NAAQS entitled ''Denver Metro Area & North Front Range 8–Hour Ozone Attainment Plan,'' excluding the last paragraph on page IV–1, the first paragraph on page IV–2, the words ''federally enforceable'' in the second to last paragraph on page V–6, and the reference to Attachment A in the Table of Contents and on page IV–3, as adopted by the Colorado Air Quality Control Commission on December 12, 2008, and submitted by the Governor to EPA on June 18, 2009.

[66 FR 47092, Sept. 11, 2001, as amended at 70 FR 48654, Aug. 19, 2005; 76 FR 47451, Aug. 5, 2011]

§ 52.351 United States Postal Service substitute Clean Fuel Fleet Program.

Revisions to the Colorado State Implementation Plan, carbon monoxide NAAQS, United States Postal Service substitute clean-fuel vehicle program, as allowed under section 182(c)(4)(B) of the Clean Air Act, to address the requirements of section 246 of the Clean Air Act for the Denver Metropolitan carbon monoxide nonattainment area. The revisions were adopted by the Colorado Air Quality Control Commission on March 16, 2000, State effective May 30, 2000, and submitted by the Governor on May 7, 2001. Administrative corrections to the Governor's May 7, 2001, submittal were submitted by the Colorado Attorney General's office on May 30, 2001.

[66 FR 64758, Dec. 14, 2001]

§ 52.352 Interstate transport.

(a) Addition to the Colorado State Implementation Plan of the Colorado Interstate Transport regarding the 1997 8-Hour Ozone Standard for the ''significant contribution,'' the ''interference with maintenance'' requirements, and the addition of ''interference with visibility protection'' requirements regarding the 1997 8-Hour Ozone and $PM_{2.5}$ Standards, submitted by the Governor's designee on June 18, 2009 and March 31, 2010.

(b) Addition to the Colorado State Implementation Plan of the Colorado Interstate Transport SIP regarding the 1997 8-Hour Ozone and 1997 $PM_{2.5}$ Standards for the ''interference with prevention of significant deterioration'' requirement, and the addition of the ''significant contribution'' and ''interference with maintenance'' requirements regarding the 1997 $PM_{2.5}$ Standards, submitted by the Governor's designee on March 31, 2010.

(c) Addition to the Colorado State Implementation Plan of the Colorado Interstate Transport SIP regarding 2006 $PM_{2.5}$ Standards for all four of the CAA section 110(a)(2)(D)(i) requirements submitted by the Governor's designee on May 11, 2012.

(d) Addition to the Colorado State Implementation Plan of the Colorado Interstate Transport SIP regarding 2008 Ozone Standards for both of the CAA section 110(a)(2)(D)(i)(I) requirements submitted to EPA on December 31, 2012.

[77 FR 1039, Jan. 9, 2012, as amended at 80 FR 47864, Aug. 10, 2015; 81 FR 7708, Feb. 16, 2016]

§ 52.353 Section 110(a)(2) infrastructure requirements.

(a) On January 7, 2008, James B. Martin, Executive Director of the Colorado Department of Public Health and Environment for the state of Colorado, submitted a certification letter which provides the state of Colorado's SIP provisions for meeting the requirements of CAA Section 110(a)(1) and (2) relevant to the 1997 8-hour ozone NAAQS. The State's 1997 Ozone Infrastructure SIP is

approved with respect to the requirements of the following elements of section 110(a)(2) of the CAA for the 1997 8-hour ozone NAAQS: (A), (B), (C), (D)(ii), (E), (F), (G), (H), (J), (K), (L), and (M).

(b) On April 4, 2008 James B. Martin, Executive Director, Colorado Department of Public Health and Environment, provided a submission to meet the infrastructure requirements for the State of Colorado for the 1997 $PM_{2.5}$ NAAQS. On June 4, 2010, Martha E. Rudolph, Executive Director, Colorado Department of Public Health and Environment, provided a submission to meet the infrastructure requirements for the State of Colorado for the 2006 $PM_{2.5}$ NAAQS. The State's Infrastructure SIP is approved with respect to the 1997 and 2006 $PM_{2.5}$ NAAQS with respect to section (110)(a)(1) and the following elements of section (110)(a)(2): (A), (B), (C) with respect to PSD and minor NSR requirements, (E), (F), (G), (H), (J) with respect to PSD requirements and the requirements of sections 121 and 127 of the Act, (K), (L), and (M).

(c) The Colorado Department of Public Health and Environment provided submissions to meet infrastructure requirements for the State of Colorado for the 2008 ozone, 2008 lead, and 2010 NO_2 NAAQS were received on December 31, 2012, July 26, 2012, and March 7, 2013, respectively. The State's Infrastructure SIP is approved with respect to the 2008 ozone, 2008 lead, and 2010 NO_2 NAAQS with respect to section (110)(a)(1) and the following elements of section (110)(a)(2): (A), (C) with respect to minor NSR and PSD requirements, (D)(i)(II) elements 3 and 4, (D)(ii), (E), (F), (G), (H), (J), (K), (L), and (M); (B) for the 2008 Pb and 2008 ozone NAAQS and conditional approval of (B) for the 2010 NO_2 NAAQS; and D(i)(I) elements 1 and 2 for the 2008 Pb and 2010 NO_2 NAAQS.

(d) The Colorado Department of Public Health and Environment provided submissions to meet infrastructure requirements for the State of Colorado for the 2010 SO_2 and 2012 $PM_{2.5}$ NAAQS were received on July 10, 2013 and December 1, 2015, respectively. The State's Infrastructure SIP for the 2010 SO_2 and 2012 $PM_{2.5}$ NAAQS is approved with respect to section (110)(a)(1) and the following elements of section (110)(a)(2): (A), (B), (C) with respect to minor NSR and PSD requirements, (D)(i)(II), (D)(ii), (E), (F), (G), (H), (J), (K), (L), and (M).

[77 FR 21452, Apr. 10, 2012, as amended at 78 FR 58188, Sept. 23, 2013; 80 FR 50206, Aug. 19, 2015; 82 FR 39031, Aug. 17, 2017]

§ 52.354 Original identification of plan.

(a) This section identifies the original ''Air Implementation Plan for the State of Colorado'' and all revisions submitted by Colorado that were federally approved prior to June 1, 2015.

(b) The plan was officially submitted on January 26, 1972.

(c) The plan revisions listed below were submitted on the dates specified.

(1) Request for legal authority submitted February 14, 1972, by the Governor.

(2) Request for 110(e) extensions submitted March 20, 1972, by the Governor.

(3) Statements by State Air Pollution Control Commission (APCC) related to public inspection of emission data, emergency episodes, and transportation control submitted May 1, 1972, by the APCC. (Non-regulatory)

(4) List of sources under compliance schedules submitted May 1, 1972, by the State Department of Health.

(5) Transportation Control Plans submitted June 4, 1973, by the Governor.

(6) Statements relating to transportation control plans submitted July 16, 1973, by the Governor. (Non-regulatory)

(7) Plan revisions submitted November 21, 1973, by the Governor which delete Section III of Regulation No. 1 only as it relates to existing sources in Appendix P concerning SO_2.

(8) On June 7, 1974, the Governor submitted five Air Quality Maintenance Area designations.

(9) Supplemental information about the Air Quality Maintenance Areas was submitted by the Governor on January 29, 1975.

(10) Procedural rules for all proceedings before the Air Pollution Control Commission, submitted May 5, 1977, by the Governor.

(11) On January 2, 1979, the Governor submitted the nonattainment area plan for all areas designated nonattainment as of March 3, 1978. EPA is taking no action on areas for which the Governor has requested redesignations (Larimer-

Weld TSP and ozone; El Paso County ozone).

(i) Regulation 9, ''Trip Reduction,'' previously approved on October 5, 1979, and now deleted without replacement.

(12) Extension request for attainment of CO and O_3 was submitted by the Governor on January 5, 1979.

(13) On July 5, 1979, the governor submitted the Air Pollution Control Commission's final comment on our May 11, 1979, proposal. This included a clarification that the ''No-Drive Day'' was not part of the State Implementation Plan and transportation control measures schedules for Larimer-Weld.

(14) On July 18, 1979, the Commission committed to revising Regulation 7.

(15) On July 23, 1979, the Governor submitted House Bill 1090 and Senate Bill 1 as part of the plan.

(16) On July 27, 1979, the Governor submitted the Denver Regional Council of Governments schedules for implementing the transportation control strategies, and clarified that the Transportation Development Plan was part of the plan.

(17) On March 4, 1980, the Governor submitted a plan revision to meet the requirements of Air Quality Monitoring 40 CFR part 58, subpart C, § 58.20.

(18) On May 29, 1980, the Governor submitted written evidence of the State's legal authority to implement and enforce an automobile emissions control program as well as schedules for implementing that program and a demonstration that it will achieve a 25% reduction in exhaust emissions by 1987.

(19) On January 22 and February 6, 1980 the Governor submitted schedules for the implementation of transportation control measures for Denver and Larimer-Weld elements of the State Implementation Plan, respectively.

(20) On April 21, 1980, the Governor submitted a plan revision to meet the data reporting requirements of section 127 of the Clean Air Act.

(21) On June 22, 1980, the Governor submitted the following amended rules:

REPEAL AND REPROMULGATION OF REGULATION NO. 3 ''A Regulation Requiring Air Pollutant Emission Notice, Emission Permits and Fees.''

REVISIONS TO COMMON PROVISIONS REGULATION as they relate to changes in Regulation No. 3.

(22) On June 5, 1980, the Governor submitted the following rules:

REPEAL AND REPROMULGATION OF REGULATION NO. 7 ''A Regulations to Control Emissions of Volatile Organic Compounds'' and revisions to the Common Provisions Regulations as they relate to changes in Regulation No. 7.

(23) On August 25, 1980, the Governor of Colorado submitted a site specific revision to the State Implementation Plan for Coors Container Corporation, Paper Packaging Division, in regard to alternative volatile organic compound emissions reduction for its printing presses.

(24) Provisions to meet the requirements of sections 110 and 172 of the Clean Air Act, as amended in 1977, regarding control of Group II VOC sources were submitted on January 6, 1981, and the supplemental information received on August 20, 1981.

(25) On December 29, 1980, the Governor submitted the following rule: Regulation No. 11, covering procedures for garage licensing (including mechanic testing and licensing), equipment requirements (including standards and specifications for exhaust gas analyzers), requirements for inspections, and emission standards as part of the Colorado motor vehicle inspection program.

(26) On March 23, 1981, the Governor submitted revised regulations limiting sulfur dioxide emissions from certain oil shale production facilities.

(27) On April 12, 1982, the Governor submitted the plan revisions to show attainment of the lead National Ambient Air Quality Standard.

(28) Regulation Number 7 is part of the plan.

(29) Provisions to meet the requirements of Part D of the Clean Air Act for carbon monoxide in Colorado Springs, Fort Collins, and Greeley and ozone in Denver were submitted on June 24, 1982, and supplemented by information submitted on May 4, 1983,by the Colorado Air Quality Control Commission.

(30) Revisions to Air Pollution Control Commission Regulation No. 1 related to fugitive particulate emissions, were submitted by the Governor on June 22, 1982; on December 6, 1982; and on March 23, 1983, with a technical

clarification dated August 5, 1982. Included is approval of requirements for continuous emission monitoring (CEM) of sulfur dioxide on fossil fuel fired steam generator with greater than 250 million BTU per hour heat input. Also addressed is the reinstatement of the 40% opacity limitation for wigwam waste-wood burners into Regulation No. 1. With this is the addition of operation and maintenance (O&M) requirements to promote improved operation of the wigwam burners.

(i) *Incorporation by reference.* (A) Emission Control Regulations for Particulates, Smokes and Sulfur Oxides for the State of Colorado, Regulation No. 1.II (Smoke and Opacity); III (Particulates); IV (Continuous Emission Monitoring Requirements for Existing Sources; VII (Statements of Basis and Purpose); and Appendices A and B; which were effective on May 30, 1982.

(B) Colorado Air Quality Control Commission Common Provisions Regulation which was effective on May 30, 1982.

(C) Letter of August 5, 1982, from the State of Colorado to EPA. Clarification of the SIP Re: Continuous Emission Requirements for Oxides of Sulfur from Fossil Fueled Steam Generators.

(31) Revisions to Air Pollution Control Commission Regulation No. 11 related to the Colorado Inspection and Maintenance (I/M) program for exhaust emission inspection of motor vehicles, submitted by the Governor on December 10, 1984.

(32) Revisions to Air Pollution Control Commission Regulation No. 1, section II.A.6 and III.C.2 (a) and (b), submitted by the Governor on April 9, 1985.

(i) *Incorporation by reference.* (A) Revisions to Air Pollution Control Commission Regulation No. 1, ''Emission Control Regulation for Particulates, Smokes, and Sulfur Oxides for the State of Colorado,'' sections II.A.6 and III.C.2 (a) and (b), effective March 2, 1985.

(33) A revision to Regulation No. 4, ''Regulation on the Sale of New Woodstoves'', to control emissions from new woodstoves was submitted by the Governor on October 24, 1986.

(i) *Incorporation by reference.* (A) Colorado Air Quality Control Commission Regulation No. 4, ''Regulation on the Sale of New Woodstoves'' (Section III.A., E., F., G. and Section VI.B. and C.) adopted June 27, 1985.

(34) [Reserved]

(35) Colorado Air Pollution Control Commission Regulation No. 4, ''Regulation on the Sale of New Wood Stoves'', submitted by the Governor on July 18, 1985.

(i) *Incorporation by reference.* (A) Colorado Air Quality Control Commission Regulation No. 4., ''Regulation on the Sale of New Wood Stoves'', adopted June 27, 1985.

(36) ''Revisions to Colorado Regulation No. 3 Requiring Air Contaminant Emission Notices, Emission Permits and Fees as it Relates to the Prevention of Significant Deterioration'' and ''Revisions to Common Provision Regulation as Related to Regulation 3.'' Changes submitted April 18, 1983, by the Governor.

(37) Supplemental information submitted on December 16, 1985, by the Colorado Department of Health concerning compliance with EPA's stack height regulations in issuing PSD permits.

(i) *Incorporation by reference.* (A) Revisions to Regulation 3 and Common Provisions Regulation adopted March 10, 1983, by the Colorado Air Quality Control Commission.

(B) Supplemental information submitted on December 16, 1985, by the Colorado Department of Health concerning compliance with EPA's stack height regulation in issuing PSD permits.

(38) Revisions to Regulation 1 to control emissions from alfalfa dehydrators were submitted by the Governor on July 29, 1987.

(i) *Incorporation by reference.* (A) Section II.A.6 and introductory text of Section III.C.2.a of Regulation 1 adopted by the Colorado Air Quality Control Commission on January 15, 1987, effective on March 2, 1987.

(39) Regulation 12, to control emissions from diesel fleets with nine or more vehicles over 7,500 pounds empty weight, registered in the AIR Program area (the Colorado I/M program), was submitted by the Governor on December 21, 1987.

(i) *Incorporation by reference.* (A) Colorado Air Quality Control Commission,

Regulation No. 12, adopted December 18, 1986, and effective January 30, 1987.

(40) A revision to the Colorado SIP was submitted by the Governor on May 8, 1986, for Visibility New Source Review.

(i) *Incorporation by reference.* (A) Revision to the Colorado State Implementation Plan regarding Revision to Regulation No. 3, Section XIV was submitted by the Governor on April 18, 1983, and was adopted on March 10, 1983.

(B) Revision to the Colorado State Implementation Plan regarding Revision to Regulation No. 3, Section IV was submitted by the Governor on May 8, 1986, and was adopted on March 20, 1986.

(41) A revision to the SIP was submitted by the Governor on December 21, 1987, for visibility general plan requirements, monitoring, and long-term strategies.

(i) *Incorporation by reference.* (A) Letter dated December 21, 1987, from Governor Roy Romer submitting the Colorado Visibility SIP revision.

(B) The visibility SIP revision, Regulation No. 3, ''Regulation requiring an air contaminant emission notice, Emission Permit Fees'', section XV, adopted by the Colorado Air Quality Control Commission on November 19, 1987.

(42) Revisions to Air Pollution Control Regulation No. 1, requiring reasonably available control technology RACT for carbon monoxide control on petroleum refinery catalytic cracking units were submitted by the Governor on May 8, 1986.

(i) *Incorporation by reference.* (A) Revisions to Section IV., paragraphs IV.A., IV.D.2. and IV.E., and Section VII., Regulation No. 1, emission control regulations for particulates, smokes, carbon monoxide, and sulfur oxides for the State of Colorado requiring CEM and RACT on petroleum refinery catalytic cracking units in the metro Denver area effective on April 30, 1986.

(43) On June 15, 1988, the Governor submitted revisions to the CO SIP for Colorado Springs. The revisions contain a new measure, the Clean Air Campaign. EPA considers all other aspects of the submittal to be surplus.

(i) *Incorporation by reference.* (A) Clean Air Campaign portion of the Carbon Monoxide State Implementation Plan for the Colorado Springs urbanized area, revised August 12, 1987.

(44) A revision to Regulation No. 4 of the Colorado SIP which exempts certain woodburning devices from the certification requirements of Regulation No. 4 was submitted by the Governor of Colorado on September 10, 1988.

(i) *Incorporation by reference.* (A) In a letter dated September 10, 1988, Roy Romer, Governor of Colorado, submitted a revision to Regulation No. 4 of the Colorado SIP.

(B) Paragraph (I)(A)(10)–(13) and (II)(C), revisions to Regulation No. 4, ''Regulation on the Sale of New Woodstoves,'' of the Colorado SIP became effective on June 30, 1988.

(45) In a letter dated May 8, 1986, the Governor submitted revisions to the Colorado Regulation No. 3 (Regulation Requiring an Air Contaminant Emission Notice, Emission Permit Fees) of the Colorado SIP modifying stack evaluations. The changes consisted of (1) new definitions of dispersion techniques, good engineering practice, nearby, and excessive concentrations (Section XII.D.) and (2) rules clarifying technical modeling and monitoring requirements (Section XII.C.).

(i) *Incorporation by reference.* (A) Revisions to the Colorado Regulation No. 3 (Regulation Requiring and Air Contaminant Emission Notice, Emission Permit Fees), Section XII, adopted March 20, 1986, by the Colorado Air Quality Control Commission.

(46) On July 29, 1987, the Governor submitted:

(1) Amendments to Colorado Regulation No. 11 (Inspection/Maintenance (I/M) program) and

(2) Regulation No. 13 (oxygenated fuels program).

(i) *Incorporation by reference.* (A) Regulation No. 11, revised January 15, 1987, effective March 2, 1987.

(B) Regulation No. 13, adopted June 29, 1987, effective July 30, 1987.

(47) In a letter dated October 23, 1985, the Director of the Air Pollution Control Division submitted the stack height demonstration analysis. Supplemental information was submitted on

June 20, 1986, December 4, 1986, February 3, 1987, March 3, 1988, March 15, 1988, July 6, 1988 and August 16, 1988.

(i) *Incorporation by reference.* Stack height demonstration analyses submitted by the State on October 23, 1985, June 20, 1986, December 4, 1986, February 3, 1987, March 3, 1988, March 15, 1988, July 6, 1988 and August 16, 1988.

(48) [Reserved]

(49) A revision to Regulation No. 4 of the Colorado SIP submitted on June 29, 1990, prohibits persons from operating a wood-burning stove or fireplace during a high pollution day in specified areas.

(i) *Incorporation by reference.* (A) Revisions to Regulation No. 4, ''Regulation on the Sale of New Woodstoves,'' effective on June 30, 1990.

(50) [Reserved]

(51) On June 29, 1990, the Governor of Colorado submitted revisions to the plan. The revisions include amendments to the Common Provisions Regulation and Regulation No. 3 for emission permit fees and prevention of significant deterioration of air quality (PSD) regulations to incorporate the nitrogen dioxide (NO_2) increments.

(i) *Incorporation by reference.* (A) Revisions to the Colorado Air Quality Control Regulations, Common Provisions Regulation and Regulation No. 3, which were effective on June 30, 1990.

(ii) *Additional material.* (A) October 22, 1990 letter from Douglas Skie, EPA, to Bradley Beckham, Director, Air Pollution Control Division.

(B) November 5, 1990 letter from Bradley Beckham, Director, Air Pollution Control Division, to Douglas Skie, EPA.

(52) [Reserved]

(53) Revisions to the Colorado State Implementation Plan were submitted by the Governor of Colorado on July 13, 1990. The revision adds a voluntary educational Better Air Campaign to the Ft. Collins Carbon Monoxide element of the Colorado SIP.

(i) *Incorporation by reference.* (A) The Fort Collins Better Air Campaign as defined in Exhibit ''A'' and adopted on September 5, 1989, through Resolution 89–161.

(54) On November 17, 1988 the Governor submitted revisions to Regulation No. 3 and the Common Provisions Regulation which included:

Provisions for the review of new sources to protect the PM–10 national ambient air quality standards (NAAQS) and for consistency with EPA requirements;

Amendments to address deficiencies and previous EPA disapprovals as identified in the May 26, 1988 SIP Call;

Provisions for the certification and trading of emission offset credits; and

Amendments to increase permit processing and annual fees.

(i) *Incorporation by reference.* (A) Regulation No. 3: Sections I.B.2.c.(i)–(vi), I.B.3.a., II.B.1.d & e, II.B.3.c., II.C.1.h., II.C.3., III.A.1., IV.C.4.e., IV.C.4.f.(i) & (iv)–(v), IV.C.6–10, IV.D.1.e., IV.D.2.a.(iv), IV.D.2.b., IV.D.2.c.(i) & (ii), IV.D.3.a.(vi), IV.D.3.b.(i)(D), IV.D.3.b.(iii)(A)(3), (5), (7), & (11), IV.D.3.d.(ii), IV.D.3.e., IV.G.3., IV.H.7., V.C–I, VI.A.2., VI.C.1., VI.D., VII.A., VIII.D., IX.K., XIII.B., XIV.B.1, XIV.B.4.c.; and the Common Provisions Regulation: Section I.G., definitions of ''Best Available Control Technology,'' ''Complete,'' ''Construction,'' ''Enforceable,'' ''Fixed Capital Cost,'' ''Lowest Achievable Emission Rate (LAER),'' ''Modification,'' Net Emissions Increase,'' ''Particulate Matter,'' ''Particulate Matter Emissions,'' ''PM10,'' ''PM10 Emissions,'' ''Reconstruction,'' ''Significant,'' ''Total Suspended Particulate;'' revised August 18, 1988, effective September 30, 1988.

(ii) *Additional material.* (A) Letter dated April 29, 1991 from the Colorado Air Pollution Control Division to EPA.

(55) [Reserved]

(56) Revisions to the Colorado State Implementation Plan were submitted by the Governor in letters dated October 25, 1989, and October 30, 1991. The revisions consist of amendments to Regulation No. 12, ''Reduction of Diesel Vehicle Emissions.''

(i) *Incorporation by reference.* (A) Regulation No. 12 revisions adopted on July 20, 1989, and effective on August 30, 1989, as follows: Part A (Diesel Fleet Self-Certification Program): I.B.2.; I.C.1.; I.D.; II.A.2.b., c.; all of IV. except those sections noted below; and add new Parts B (Diesel Opacity Inspection Program) and C (Standards for Visible Pollutants from Diesel Engine Powered Vehicles—Operating on Roads, Streets and Highways), except those sections

noted below. Regulation No. 12 revisions adopted on September 19, 1991, and effective on October 30, 1991, as follows: Part A: I.A.; I.B.3–18.; I.C.2.; II.A.1.; II.A.2.d., f., g., III.A.; IV.A.2.; IV.C.1.c., g.; IV.C.2.c., h.; IV.C.3.f., i.; IV.C.4.k.; IV.C.5.a.iv.; IV.C.5.b.; V.; VI.; VII.; VIII.; Part B: I.B.2., 7., 19., 30.–37., 40., 50., 51.; I.C.2.; I.D.; I.E.3.; II.C.1.b.iv.; II.E.2.c., e.; II.E.8.; III.A.; III.B.4.; III.C.4.b.viii.–ix.; III.D.3.b.vi., xi.; III.D.3.c.viii., xiii.; V.; VI.; and Part C: A.–F.

(57) Revision to the State Implementation Plan for Carbon Monoxide: Greeley Element.

(i) *Incorporation by reference.* (A) Letter and submittal dated November 25, 1987, from the Governor of Colorado to the EPA Region VIII Administrator, to revise the SIP to include the Greeley Element. The revision was adopted by the State on September 17, 1987.

(58) On November 17, 1988, the Governor submitted an amendment to Colorado Regulation No. 1, Section II.A.9., to exempt the destruction of Pershing missiles under the Intermediate-Range Nuclear Forces (INF) Treaty from meeting the opacity limits.

(i) *Incorporation by reference.* (A) Regulation No. 1, Section II.A.9., adopted September 15, 1988, effective October 30, 1988.

(59) Revisions to the State's new source review and prevention of significant deterioration permitting rules in the Common Provisions Regulation and Regulation No. 3, which were submitted by the Governor on April 9, 1992.

(i) *Incorporation by reference.* (A) Regulation No. 3: Sections I.A., I.B.2.c. through e., I.B.3.e. and f., II.B.1., II.B.2., II.C., III.A.1., III.B., III.D., IV.B.2., IV.C.4., IV.C.7., IV.C.9, IV.D.1., IV.D.2.a.(ii) and (iv), IV.D.2.b.(i), IV.D.3.a.(iii) and (vi), IV.D.3.b.(iv), IV.H., IV.I., V.A., V.C.1., V.C.3., V.D.1., V.D.2., V.D.4., V.D.5., V.D.11., V.E.1., V.E.5., V.F.10., V.F.11., V.F.13., V.G.7., V.G.8., V.H.3., V.H.7. and 8., V.I.3., VI.A.1., VI.C.2., IX.D., XII.D., XIII.B.4., XIII.B.6., and XV.D.2.; and the Common Provisions Regulation: Sections I.D.2., I.F., II.C.1., II.C.4., IV., and Section I.G.- definitions of ''best available control technology,'' ''commenced construction,'' ''complete,'' ''federally enforceable,'' ''modification,'' ''potential to emit,'' ''reasonable further progress,'' and ''stationary source;'' revised October 17, 1991, effective November 30, 1991.

(ii) Common Provisions Regulation, 5 CCR 1001–2, Section III., Smoking Gasoline Powered Motor Vehicle Control Region, is deleted without replacement, effective September 30, 2002, as described in (c)(118) below.

(60) Revisions to the Long-Term Strategy of the Colorado State Implementation Plan for Class I Visibility Protection were submitted by the Governor in a letter dated November 18, 1992. The submittal completely replaces the previous version of the Long-Term Strategy and includes amendments to Air Quality Control Commission Regulation No. 3, ''Air Contaminant Emissions Notices.''

(i) *Incorporation by reference.* (A) Revisions to the Visibility Chapter of Regulation No. 3 as follows: XV.F.1.c. as adopted on August 20, 1992, and effective on September 30, 1992.

(61) The Governor of Colorado submitted a portion of the requirements for the moderate nonattainment area PM_{10} State Implementation Plan (SIP) for Denver, Colorado with a letter dated June 7, 1993, and subsequent submittals dated September 3, 1993, and October 20, 1993, fulfilling most of the commitments made in the June 7, 1993, letter. The submittals were made to satisfy those moderate PM_{10} nonattainment area SIP requirements due for the Denver PM_{10} nonattainment area on November 15, 1991. EPA is approving, for the limited purpose of strengthening the SIP, the control measures contained in the SIP revisions identified above. (EPA is not approving, at this time, the control measures limiting the emissions from Purina Mills and Electron Corporation.)

(i) *Incorporation by reference.* (A) Revisions to Regulation No. 4, ''Regulation on the Sale of New Woodstoves and the Use of Certain Woodburning Appliances During High Pollution Days,'' as adopted by the Air Quality Control Commission on June 24, 1993,

effective August 30, 1993, as follows: insert new Section VIII and recodification of References Section. This revision pertains to local jurisdiction implementation and enforcement of ordinances and resolutions restricting wood burning on high pollution days.

(B) Regulation No. 16, ''Concerning Material Specifications for, Use of, and Clean-up of Street Sanding Material,'' as adopted by the Air Quality Control Commission on June 24, 1993, effective August 30, 1993, as follows: recodification of Regulation and addition of Sections II and III, which regulate emissions from street sanding and sweeping in the Denver PM_{10} nonattainment area.

(C) Revisions to Regulation No. 1, ''Emission Control Regulations for Particulates, Smokes, Carbon Monoxide, and Sulfur Oxides for the State of Colorado,'' as adopted by the Air Quality Control Commission on August 19, 1993, effective October 30, 1993, as follows: insert new Sections VII and VIII and recodification of the two following Sections, ''Emission Regulations Concerning Areas Which are Nonattainment for Carbon Monoxide—Refinery Fluid Bed Catalytic Cracking Units'', and ''Statements of Basis and Purpose'' Sections. The revisions pertain to restrictions on the use of oil as a back-up fuel for certain sources and set new emission limits at the following Public Service Company Power Plants: Cherokee, Arapahoe, and Valmont.

(D) Coors Glass Plant allowable emission limitations on three furnaces.

1. Permit 92JE129–1, effective date January 19, 1993, regulating emissions at the KTG glass melting furnace #1.

2. Permit 92JE129–2, effective date January 19, 1993, regulating emissions at the KTG glass melting furnace #2.

3. Permit 92JE129–3, effective date January 19, 1993, regulating emissions at the KTG glass melting furnace #3.

(E) Conoco Refinery allowable emission limitations from the refinery.

1. Permit 90AD524, effective date March 20, 1991, regulating a Tulsa natural gas fired 20MMbtu/hour heater equipped with low-Nox burners.

2. Permit 90AD053, effective date March 20, 1991, regulating process heaters H–10, H–11 and H–27 and process boilers B4, B6, and B8 all burning fuel gas only.

3. Permit 91AD180–3, effective December 28, 1992, regulating the three stage Claus sulfur recovery unit with tail gas recovery unit.

(ii) *Additional material.* (A) Regional Air Quality Council, ''Guidelines for Reducing Air Pollution from Street Sanding'' sets voluntary guidelines for public works departments to follow to reduce the amount of street sand applied, and includes recommendations for increasing the effectiveness of street cleaning operations.

(B) Adolph Coors Company Brewery permit emission limitations on five boilers. Permits: C–12386–1&2, C–12386–3, C–10660, C–11199, and C–11305.

(62) On February 24, 1993, and December 9, 1993, the Governor of Colorado submitted revisions to the Colorado State implementation plan (SIP) to satisfy those moderate PM–10 nonattainment area SIP requirements for Pagosa Springs, Colorado due to be submitted by November 15, 1991. Included in the December 9, 1993 submittal were PM–10 contingency measures for Pagosa Springs to satisfy the requirements of section 172(c)(9) of the Act due to be submitted by November 15, 1993.

(i) *Incorporation by reference.* (A) Colorado Air Quality Control Commission Nonattainment Areas regulation, section I. ''Pagosa Springs Nonattainment Area,'' adopted on November 19, 1992, effective on December 30, 1992, with revisions adopted on November 12, 1993, effective on December 30, 1993.

(63) On November 18, 1992, the Governor of Colorado submitted a plan for the establishment and implementation of a Small Business Assistance Program to be incorporated into the Colorado State Implementation Plan as required by section 507 of the Clean Air Act.

(i) *Incorporation by reference.* (A) Colorado Revised Statutes, Sections 25–7–109.2 and 25–7–114.7, to establish and fund a small business stationary source technical and environmental compliance assistance program, effective July 1, 1992.

(ii) *Additional materials.* (A) November 18, 1992 letter from the Governor of Colorado submitting a Small Business Assistance Program plan to EPA.

(B) The State of Colorado plan for the establishment and implementation of a Small Business Assistance Program, adopted by the Colorado Air Quality Control Commission on October 15, 1992, effective October 15, 1992.

(64) On December 9, 1993, the Governor of Colorado submitted PM_{10} contingency measures for the moderate nonattainment PM_{10} areas of Canon City and Lamar, Colorado. The submittal was made to satisfy the moderate PM_{10} nonattainment area requirements for contingency measures due for Canon City and Lamar on November 15, 1993.

(i) *Incorporation by reference.* (A) Colorado Air Quality Control Commission Nonattainment Area Regulation, Section IV. ''Lamar Nonattainment Area,'' and Section V. ''Canon City Nonattainment Area—PM–10,'' adopted on November 12, 1993, and effective December 30, 1993.

(65) On January 15, 1992, March 17, 1993, and December 9, 1993, the Governor of Colorado submitted revisions to the Colorado State implementation plan (SIP) to satisfy those moderate PM–10 nonattainment area SIP requirements for Aspen, Colorado due to be submitted by November 15, 1991. Included in the December 9, 1993 submittal were PM–10 contingency measures for Aspen to satisfy the requirements of section 172(c)(9) of the Act due to be submitted by November 15, 1993.

(i) *Incorporation by reference.* (A) Colorado Air Quality Control Commission Nonattainment Areas regulation, all of Section III. ''Aspen/Pitkin County PM–10 Nonattainment Area'' except Section III.C.6., adopted on January 21, 1993 effective on March 2, 1993, with revisions adopted on November 12, 1993, effective on December 30, 1993.

(66) On January 14, 1993, the Governor of Colorado submitted revisions to the new source review and prevention of significant deterioration requirements in the Common Provisions Regulation and Regulation No. 3, as well as a revision to Regulation No. 7 pertaining to volatile organic compounds of negligible photochemical reactivity.

(i) *Incorporation by reference.* (A) Air Quality Control Commission Common Provisions Regulation, Section I.C. and Section I.G., definitions of ''adverse environmental effect,'' ''air pollutant,'' ''best available control technology,'' ''federal act,'' ''federally enforceable,'' ''hazardous air pollutant,'' paragraph h. in ''net emissions increase,'' ''ozone depleting compound,'' and ''significant;'' revised 11/19/92, effective 12/30/92.

(B) Air Quality Control Commission Regulation No. 3 Air Contaminant Emission Notices, Sections I.B.1., I.B.2.c-e., I.B.3.e-f., IV.B.3–5, IV.D.2.a.(iii), IV.D.2.c., IV.D.3., IV.D.4., IV.E., IV.F., IV.H., V.E.9., VI.B.1., VI.B.4., VI.B.5., VI.C., VII.C., VIII.A., VIII.C.1., XI.A., and XIII.A. and B.; revised 11/19/92, effective 12/30/92.

(C) Air Quality Control Commission Regulation No. 7 Emissions of Volatile Organic Compounds, Section II.B.; revised 11/19/92, effective 12/30/92.

(67) On November 27, 1992, the Governor of Colorado, submitted a revision to the Colorado SIP. This revision replaces previous versions of Regulation No. 13 with the amended Regulation No. 13 (oxygenated gasoline program) adopted September 17, 1992. Regulation No. 13 requires the oxygenated gasoline programs to be implemented in the Fort Collins-Loveland, Colorado Springs, and Boulder-Denver Metropolitan Statistical Areas (MSA) as required by Section 211(m) of the Clean Air Act Amendments of 1990.

(i) *Incorporation by reference.* (A) Revision to Regulation No. 13, ''Oxygenated Gasoline Program,'' as adopted by the Colorado Air Quality Control Commission on September 17, 1992, effective October 10, 1992, as follows: entire Regulation revision. This regulation supersedes and replaces all previous revisions to Regulation No. 13, (40 CFR, 52.320(46)(2)).

(68) The Governor of Colorado submitted a portion of the requirements for the moderate nonattainment area PM_{10} State Implementation Plan (SIP) for Telluride, Colorado with a letter dated March 17, 1993. The submittal was made to satisfy those moderate PM_{10} nonattainment area SIP requirements due for Telluride on November 15, 1991; however, the submittal did not

contain quantitative milestones to provide for maintenance of the PM_{10} National Ambient Air Quality Standards through December 1997. The Governor of Colorado submitted moderate PM_{10} nonattainment area contingency measures for Telluride with a letter dated December 9, 1993. This submittal was intended to satisfy the requirements of section 172(c)(9) of the Clean Air Act due on November 15, 1993.

(i) *Incorporation by reference.* (A) Colorado Air Quality Control Commission Nonattainment Areas regulation, Section II., Telluride Nonattainment Area, adopted January 21, 1993 and effective on March 2, 1993, with revisions adopted November 12, 1993 and effective December 30, 1993.

(ii) *Additional material.* (A) The commitment and schedule for the adoption and implementation of PM_{10} control measures that are necessary to demonstrate maintenance of the 24-hour PM_{10} standard in Telluride, which were submitted in an April 21, 1994 letter from Thomas Getz, Air Pollution Control Division, to Douglas M. Skie, EPA.

(69) On January 14, 1994 and on June 24, 1994, Roy Romer, the Governor of Colorado, submitted SIP revisions to the Implementation Plan for the Control of Air Pollution. This revision establishes and requires the implementation of an enhanced motor vehicle inspection and maintenance program in the Denver and Boulder urbanized areas as required by section 187(a)(6) of the Clean Air Act Amendments of 1990. This material is being incorporated by reference for the enforcement of Colorado's enhanced I/M program only.

(i) *Incorporation by reference.* (A) Colo. Rev. Stat. Sections 42–4–306.5—42–4–316 adopted June 8, 1993 as House Bill 93–1340, effective July 1, 1993.

(B) Regulation No. 11 (Inspection/Maintenance Program) as adopted by the Colorado Air Quality Control Commission (AQCC) on March 17, 1994.

(ii) *Additional materials.* (A) SIP narrative and technical appendices 1–20 as corrected and approved by the AQCC on June 21, 1994. The narrative is entitled ''State of Colorado Motor Vehicle Inspection and Maintenance State Implementation Plan'', dated December 16, 1993 with technical corrections.

(70) Revisions to the Colorado State Implementation Plan were submitted by the Governor on September 27, 1989, and August 30, 1990. The revisions consist of amendments to the Ozone provisions in Regulation No. 7, ''Regulation To Control Emissions of Volatile Organic Compounds.''

(i) *Incorporation by reference.* (A) Revisions to Regulation No. 7, Sections 7.I (Applicability), 7.II (General Provisions), 7.III (General Requirements for Storage and Transfer of Volatile Organic Compounds), 7.IV (Storage of Highly Volatile Organic Compounds), 7.V (Disposal of Volatile Organic Compounds), 7.VI (Storage and Transfer of Petroleum Liquid), 7.VIII (Petroleum Processing and Refining), 7.IX (Surface Coating Operations), 7.X (Use of Solvents for Degreasing and Cleaning), 7.XI (Use of Cutback Asphalt), 7.XII (Control of VOC Emissions from Dry Cleaning Facilities Using Perchloroethylene as a Solvent), 7.XIII (Graphic Arts), 7.XIV (Pharmaceutical Synthesis), 7.XV (Control of Volatile Organic Compound Leaks from Vapor Collection Systems Located at Gasoline Terminals, Bulk Plants, and Gasoline Dispensing Facilities), and Appendices A (Criteria for Control of Vapors from Gasoline Transfer to Storage Tanks), B (Criteria for Control of Vapors from Gasoline Transfer at Bulk Plants-Vapor Balance System), and D (Test Procedures for Annual Pressure/Vacuum Testing of Gasoline Transport Trucks). The following new emission sources and appendices were added to Regulation No. 7: 7.IX.A.7 (Fugitive Emission Control), 7.IX.M (Flat Wood Paneling Coating), 7.IX.N. (Manufacture of Pneumatic Rubber Tires), and Appendix E (Emission Limit Conversion Procedure). These revisions became effective on October 30, 1989, and August 30, 1990.

(ii) *Additional material.* (A) February 5, 1992, letter from John Leary, Acting Director, Colorado Air Pollution Control Division, to Douglas Skie, EPA. This letter contained the State's commitment to conduct capture efficiency testing using the most recent EPA capture efficiency protocols, and the commitment to adopt federal capture efficiency test methods after they are officially promulgated by EPA.

(71) The Governor of Colorado submitted carbon monoxide contingency measures for Colorado Springs and Fort Collins with a letter dated February 18, 1994. This submittal was intended to satisfy the requirements of section 172(c)(9) of the Clean Air Act for contingency measures which were due on November 15, 1993.

(i) *Incorporation by reference.* (A) Colorado Air Quality Control Commission Nonattainment Areas regulation, 5 CCR 1001–20, Section VI, City of Fort Collins Nonattainment Area, and Section VII, Colorado Springs Nonattainment Area, adopted on November 12, 1993, effective on December 30, 1993.

(72) On November 12, 1993, August 25, 1994, September 29, 1994, November 17, 1994, and January 29, 1996, the Governor of Colorado submitted revisions to the State's construction permitting requirements in Regulation No. 3 and the Common Provisions Regulation. These revisions included nonattainment new source review permitting requirements for new and modified major sources of PM–10 precursors locating in the Denver moderate PM–10 nonattainment area, changing from the dual source definition to the plantwide definition of source in nonattainment new source review permitting, other changes to Regulation No. 3 to make the construction permitting program more compatible with the State's title V operating permit program, and correction of deficiencies. In addition, the Governor submitted revisions to the Common Provisions Regulation on April 9, 1992 and January 14, 1993.

(i) *Incorporation by reference.* (A) Common Provisions Regulation, 5 CCR 1001–2, Section I.G., definitions of ''baseline area'' and ''reconstruction;'' adopted 10/17/91, effective 11/30/91.

(B) Common Provisions Regulation, 5 CCR 1001–2, Section I.G., definitions of ''net emissions increase'' and ''stationary source;'' adopted 8/20/92, effective 9/30/92.

(C) Common Provisions Regulation, 5 CCR 1001–2, Section I.A. and Section I.G., definitions of ''emission control regulation'' and ''volatile organic compound;'' adopted 11/19/92, effective 12/30/92.

(D) Regulation No. 3, Air Contaminant Emissions Notices, 5 CCR 1001–5, revisions adopted 8/18/94, effective 9/30/94, as follows: Part A (with the exception of the last sentence in the definition of ''Federally enforceable'' in Section I.B.22 and with the exception of Section IV.C.) and Part B (with the exception of Sections V.B. and VII.A.5.). This version of Regulation No. 3, as incorporated by reference here, supersedes and replaces all versions of Regulation No. 3 approved by EPA in previous actions.

(E) Regulation No. 3, Air Contaminant Emissions Notices, 5 CCR 1001–5, revisions adopted on 3/16/95, effective 5/30/95, as follows: Part A: Sections I.B.12., I.B.31., I.B.32., I.B.35.B., I.B.36., I.B.37., I.B.41., I.B.50., I.B.57., I.B.66., II.D.5.c., II.D.5.d., V.B., V.C.6., V.C.10., V.E.1.c., V.E.1.d., V.H.4. through V.H.8., V.I.1., VI.C.1.f., and VII.A.; Part B: Sections III.D.2., III.D.3., IV.B.4., IV.C.1., IV.D.1.a., IV.D.2.c.(i)(E), IV.D.4.a., and IV.J.

(F) Previously approved in paragraph (c)(72)(i)(D) under Regulation No. 3, Air Contaminant Emissions Notices, 5 CCR 1001–5. These sections are now deleted without replacement: II.B.7., II.B.8., II.B.9., II.B.10., and II.D.7, effective October 30, 2006.

(G) 1001–5, Colorado Regulation No. 3, Air Contaminant Emissions Notices, Part A, Concerning General Provisions Applicable to Reporting and Permitting, Sections II.D.1.m, II.D.1.ee, II.D.1.uu, II.D.1.ddd, and II.D.1.eeee, previously approved in paragraph (c)(72)(i)(D) of this section, were repealed by the State of Colorado effective January 30, 2009 and are removed without replacement.

(ii) *Additional material.* (A) July 3, 1995 letter from Martha E. Rudolph, First Assistant Attorney General, Colorado Office of the Attorney General, to Jonah Staller, EPA.

(73) On January 14, 1994 and on June 24, 1994, Roy Romer, the Governor of Colorado, submitted SIP revisions to the State Implementation Plan for the Control of Air Pollution. This revisions requires the implementation of a basic motor vehicle inspection and maintenance program in the urbanized areas of El Paso (Colorado Springs), Larimer (Fort Collins), and Weld (Greeley) Counties meeting the requirements of the Clean Air Act Amendments of 1990.

This material is being incorporated by reference for the enforcement of Colorado's basic I/M program only.

(i) *Incorporation by reference.* (A) Colo. Rev. Stat. §§ 42–4–306.5—42–4–316 adopted June 8, 1993 as House Bill 93–1340, effective July 1, 1993.

(B) Regulation No. 11 (Inspection/Maintenance Program) as adopted by the Colorado Air Quality Control Commission (AQCC) on March 17, 1994, effective April 30, 1994.

(74) The Governor of Colorado submitted PM_{10} contingency measures for Denver, Colorado in a letter dated November 17, 1995.

(i) *Incorporation by reference.* (A) Section IV. of Regulation No. 16, Street Sanding Emissions, adopted March 16, 1995, effective May 30, 1995.

(75) The Governor of Colorado submitted revisions to the PM_{10} moderate nonattainment area State Implementation Plan (SIP) for Telluride, Colorado with a letter dated April 22, 1996. The submittal was made to satisfy the State's commitment to adopt additional control measures necessary to demonstrate continued maintenance of the PM_{10} National Ambient Air Quality Standards through 1997. Due to the satisfaction of this commitment, the SIP now adequately meets the quantitative milestone requirement.

(i) *Incorporation by reference.* (A) Colorado Air Quality Control Commission State Implementation Plan-Specific Regulation for Nonattainment Areas, 5 CCR 1001–20, Section II.C., Telluride Nonattainment Area Street Sanding Requirements, adopted August 17, 1995 and effective October 30, 1995.

(76) The Governor of Colorado submitted the moderate nonattainment area PM_{10} State Implementation Plan (SIP) for Steamboat Springs, Colorado with a letter dated September 16, 1997. The submittal was made to satisfy those moderate PM_{10} nonattainment area SIP requirements due for Steamboat Springs on July 20, 1995, including among other things, control measures, technical analyses, quantitative milestones, and contingency measures. The September 16, 1997 submittal also included the Steamboat Springs emergency episode plan.

(i) *Incorporation by reference.* (A) Colorado Air Quality Control Commission Nonattainment Areas, 5 CCR 1001–20, Section VIII., Steamboat Springs PM_{10} Nonattainment Area, adopted October 17, 1996 and effective on December 30, 1996.

(ii) *Additional material.* (A) An October 29, 1997 letter from Margie M. Perkins, APCD, to Richard R. Long, EPA, clarifying that the regulation entitled ''Ambient Air Quality Standards for the State of Colorado'' was included in the September 16, 1997 Steamboat Springs SIP submittal for informational purposes only.

(77) On September 29, 1995, Roy Romer, the Governor of Colorado, submitted a SIP revision to the State Implementation Plan for the Control of Air Pollution. This revision provides a replacement Regulation No. 11, Inspection/Maintenance Program which limits dealer self-testing. This material is being incorporated by reference for the enforcement of Colorado's I/M program.

(i) *Incorporation by reference.* (A) Department of Health, Air Quality Control Commission, Regulation No. 11 (Motor Vehicle Emissions Inspection Program) as adopted by the Colorado Air Quality Control Commission (AQCC) on September 22, 1994, effective November 30, 1994.

(78) Revisions to the Colorado State Implementation Plan were submitted by the Governor of the State of Colorado on August 25, 1995, and October 16, 1995. The revisions consist or amendments to Regulation No. 3, ''Air Contaminant Emissions Notices'' and to Regulation No. 7, ''Regulation To Control Emissions of Volatile Organic Compounds.'' These revisions involve source-specific State Implementation Plan requirements for emission trading for Pioneer Metal Finishing Inc. and crossline averaging for Lexmark International Inc.

(i) *Incorporation by reference.* (A) Revisions to Regulation No. 3, 5 CCR 1001–5, sections V.A. (Purpose), V.C.1 , V.C.3, V.C.5 (Definitions), V.D.6, V.D.7, V.D.9 (Procedure for Certification of Emissions Reductions and Approval of Transactions), V.E. (Criteria for Certification of Emissions Reductions), V.F., V.F.5, V.F.7, V.F.8.1, V.F.14, and V.F.15 (Criteria for Approval of all

Transactions) and Revisions to Regulation No. 7, 5 CCR 1001–9, section II.D.1.a (Alternative Control Plans and Test Methods) became effective on December 30, 1994. The new section IX.L.2.c through IX.L.2.c.xv (Manufactured Metal Parts and Metal Products) to Regulation No. 7, 5 CCR 1001–9, applicable to Pioneer Metal Finishing Inc., became effective on April 30, 1995. The new section IX.A.12 through IX.A.12.a.(xi) (General Provisions) to Regulation No. 7, 5 CCR 1001–9, applicable to Lexmark International Inc., became effective July 30, 1995.

(79) On August 23, 1996, the Governor of Colorado submitted a revision to the long-term strategy portion of Colorado's State Implementation Plan (SIP) for Class I Visibility Protection. The revision was made to incorporate into the SIP, among other things, emissions reduction requirements for the Hayden Station (a coal-fired steam generating plant located near the town of Hayden, Colorado) that are based on a consent decree addressing numerous air pollution violations at the plant. This SIP revision replaces the previous existing impairment portion of the long-term strategy as it relates to the Mt. Zirkel Wilderness Area.

(i) *Incorporation by reference.* (A) Long-Term Strategy Review and Revision of Colorado's State Implementation Plan for Class I Visibility Protection Part I: Hayden Station Requirements, as follows: Section VI., effective on August 15, 1996.

(80) On July 11, 1994, July 13, 1994, September 29, 1995, and December 22, 1995, the Governor of Colorado submitted revisions to the Colorado State Implementation Plan (SIP) to satisfy those CO nonattainment area SIP requirements for Denver and Longmont, Colorado due to be submitted by November 15, 1992, and further revisions to the SIP to shorten the effective period of the oxygenated fuels program. EPA is not taking action on the SIP provision submitted on July 11, 1994 that calls for a prohibition of the reregistration of abandoned and impounded vehicles.

(i) *Incorporation by reference.* (A) Regulation No. 11, Motor Vehicle Emissions Inspection Program, 5 CCR 1001–13, as adopted on September 22, 1994, effective November 30, 1994. Regulation No. 13, Oxygenated Fuels Program, 5 CCR 1001–16, as adopted on October 19, 1995, effective December 20, 1995.

(81) On August 1, 1996, the Governor of Colorado submitted revisions to the prevention of significant deterioration regulations in Regulation No. 3 to incorporate changes in the Federal PSD permitting regulations for PM–10 increments and to make other minor administrative revisions.

(i) *Incorporation by reference.* (A) Regulation No. 3, Air Contaminant Emissions Notices, 5 CCR 1001–5, revisions adopted 8/17/95, effective 10/30/95, as follows: Part A, Section I.B., as follows: the definition of ''baseline area'' in subsection 10, the definition of ''minor source baseline date'' in subsection 35, and the definition of ''net emissions increase'' in subsection 37; Part A: Sections IV.B., V.C.1., and V.D.11.c.; Part B: Sections IV.D.3.b.(v), VII.A.1., and X.D.

(82) The Governor of Colorado submitted the Denver moderate nonattainment area PM_{10} State Implementation Plan (SIP) with a letter dated March 30, 1995. The Governor submitted revisions to Regulation No. 13, one of the control measures relied on in the PM_{10} SIP, on December 22, 1995. These submittals as well as support documentation submittals made on June 8, 1993, June 10, 1993, June 25, 1993, July 19, 1993, August 5, 1993, September 3, 1993, September 21, 1993, October 20, 1993, December 12, 1993, January 19, 1994, December 23, 1994, March 3, 1995, and November 8, 1995 satisfy those moderate PM_{10} nonattainment area SIP requirements due for the Denver PM_{10} nonattainment area on November 15, 1991. EPA is approving the SIP. This approval replaces the previous limited approval at 40 CFR 52.320(c)(61).

(i) *Incorporation by reference.* (A) Regulation No. 4, ''Regulation on the Sale of New Woodstoves and the Use of Certain Woodburning Appliances During High Pollution Days,'' 5 CCR 1001–6, as adopted by the Air Quality Control Commission on June 24, 1993, effective August 30, 1993.

(B) Local woodburning ordinances and resolutions.

(*1*) Arvada, Colorado. Ordinance number 2451, effective November 2, 1987, regarding woodburning restrictions.

(*2*) Aurora, Colorado. Ordinance numbers 87–118 and 92–14, effective May 22, 1987 and May 22, 1992, respectively, regarding woodburning restrictions.

(*3*) Boulder, Colorado. Ordinance numbers 5007 and 5445, adopted November 25, 1986 and April 21, 1992, respectively, regarding woodburning restrictions.

(*4*) Broomfield, Colorado. Ordinance number 794, effective November 24, 1988, regarding woodburning restrictions.

(*5*) Denver, Colorado. Ordinance numbers 293 and 1018, approved May 30, 1990 and December 16, 1993, respectively, regarding woodburning restrictions.

(*6*) Douglas County, Colorado. Resolution number 991–128, adopted November 14, 1991, regarding woodburning restrictions.

(*7*) Englewood, Colorado. Ordinance numbers 31 and 39, passed on July 20, 1992, regarding woodburning restrictions.

(*8*) Federal Heights, Colorado. Ordinance number 565, adopted January 5, 1988, regarding woodburning restrictions.

(*9*) Glendale, Colorado. Ordinance numbers 2 and 14, adopted January 5, 1988 and effective on October 20, 1992, respectively, regarding woodburning restrictions.

(*10*) Greenwood Village, Colorado. Ordinance numbers 17 and 9, effective July 9, 1988 and March 25, 1992, respectively, regarding woodburning restrictions.

(*11*) Jefferson County, Colorado. Resolution numbers CC89–873 and CC90–617, dated December 29, 1989 and August 7, 1990, respectively, regarding woodburning restrictions.

(*12*) Lafayette, Colorado. Ordinance number 24; series 1988, effective November 15, 1988, regarding woodburning prohibitions.

(*13*) Lakewood, Colorado. Ordinance numbers 0–86–113 and 0–92–61, effective December 1, 1986 and November 28, 1992, respectively, regarding woodburning restrictions.

(*14*) Littleton, Colorado. Ordinance numbers 51 and 26, passed on December 6, 1988 and August 18, 1992, respectively, regarding woodburning restrictions.

(*15*) Longmont, Colorado. Ordinance number 0–89–1, adopted December 27, 1988, regarding woodburning restrictions.

(*16*) Mountain View, Colorado. Ordinance number 90–5, approved on January 7, 1991, regarding woodburning restrictions.

(*17*) Sheridan, Colorado. Ordinance numbers 22 and 1, approved October 25, 1988 and February 9, 1993, respectively, regarding woodburning restrictions.

(*18*) Thornton, Colorado. Ordinance numbers 2120 and 2194, adopted October 28, 1991 and September 28, 1992, respectively, regarding woodburning restrictions.

(*19*) Westminster, Colorado. Ordinance numbers 1742 and 2092, enacted on November 9, 1987 and December 28, 1992, respectively, regarding woodburning restrictions.

(C) Regulation No. 16, ''Concerning Material Specifications for, Use of, and Clean-up of Street Sanding Material,'' 5 CCR 1001–18, as adopted by the Air Quality Control Commission on September 22, 1994, effective November 30, 1994.

(D) Regulation No. 1, ''Emission Control Regulations for Particulates, Smokes, Carbon Monoxide, and Sulfur Oxides for the State of Colorado,'' 5 CCR 1001–3, Sections I–IV and VI–IX, and Appendices A and B, as adopted by the Air Quality Control Commission on August 19, 1993, effective October 20, 1993; with revisions to Sections VII and VIII, adopted by the Air Quality Control Commission on September 22, 1994, effective November 30, 1994.

(E) Public Service Company Cherokee facility SO_2 emission limitations for the power facility.

(*1*) Permit 86AD352(1), effective date November 13, 1986, regulates SO_2 emissions at Unit #1.

(*2*) Permit 86AD352–2, effective date April 30, 1992, regulates SO_2 emissions at Unit #4.

(F) Purina Mills Inc. total PM_{10} emissions limitations at the animal feed manufacturing facility.

(*1*) Permit 93AD1008–1, effective date October 19, 1993, regulating emissions at the finished product loadout facility.

(*2*) Permit 93AD1008–2, effective date October 19, 1993, regulating emissions at the grain receiving facility.

(G) Electron Corporation total PM_{10} emission limitations at the gray iron foundry.

(*1*) Permit 93AR1363–1, effective date January 12, 1994, regulating emissions at the Table shot blaster and associated baghouse.

(*2*) Permit 93AR1363–2, effective date January 12, 1994, regulating emissions at the five grinding booths-stand and associated baghouse.

(*3*) Permit 93AR1363–3, effective date January 12, 1994, regulating emissions at the five grinding booths-hand and associated baghouse.

(*4*) Permit 93AR1363–4, effective date January 12, 1994, regulating emissions at the Muller-25 sand system and associated baghouse.

(*5*) Permit 93AR1363–5, effective date January 12, 1994, regulating emissions at the Coleman core oven-sand.

(*6*) Permit 93AR1363–6, effective date January 12, 1994, regulating emissions at the Spinner wheelabrator and associated baghouse.

(*7*) Permit 93AR1363–7, effective date January 12, 1994, regulating emissions at the Sand sile-core room and associated baghouse.

(*8*) Permit 93AR1363–8, effective date January 12, 1994, regulating emissions from pouring of molten iron (casting) and castings cooling.

(*9*) Permit 93AR1363–9 effective date January 12, 1994, regulating emissions at three tumble blast machines and associated baghouse.

(*10*) Permit 93AR1363–10, effective date January 12, 1994, regulating emissions at two mullers-80A and associated baghouse.

(*11*) Permit 93AR1363–11, effective date January 12, 1994, regulating emissions at the Casting shakeout hood and associated baghouse.

(*12*) Permit 93AR1363–12, effective date January 12, 1994, regulating emissions at the Casting-disamatic mold and associated baghouse.

(*13*) Permit 93AR1363–13, effective date January 12, 1994, regulating emissions at the Sand silo-disamatic and associated baghouse.

(*14*) Permit 93AR1363–14, effective date January 12, 1994, regulating emissions at the Sand silo-air set room and associated baghouse.

(*15*) Permit 93AR1363–15, effective date January 12, 1994, regulating emissions at two electric induction furnaces and associated baghouse.

(*16*) Permit 93AR1363–16, effective date January 12, 1994, regulating emissions at two Inducto-Therm electric induction furnaces model #2000/4, serial nos. 40102 and 40103, and associated baghouse.

(*17*) Permit 93AR1363–17, effective date January 12, 1994, regulating emissions from chemicals used in core making process.

(*18*) Permit 93AR1363–18, effective date January 12, 1994, regulating emissions at the Loop shakeout and associated baghouse.

(*19*) Permit 93AR1363–19, effective date January 12, 1994, regulating emissions at the Floor shakeout and associated baghouse.

(*20*) Permit 93AR1363–20, effective date January 12, 1994, regulating emissions at the Reclaim sand and associated baghouse.

(*21*) Permit 93AR1363–21 effective date January 12, 1994, regulating emissions at the Sand heater/cooler and associated baghouse.

(*22*) Permit 93AR1363–22, effective date January 12, 1994, regulating emissions at the Paint spray booth.

(H) TRIGEN-Colorado Energy Corporation permit emissions limitations at two boilers.

(*1*) Permit 10JE660, effective date February 25, 1997, regulating emissions at the #4 boiler: tangential fired cogeneration steam boiler.

(*2*) Permit 11JE305–1, effective date February 19, 1997, regulating emissions at the #5 boiler: tangential fired cogeneration steam boiler.

(I) Rocky Mountain Bottle Company emission limitations on three furnaces.

(*1*) Permit 92JE129–1, effective date June 29, 1995, regulating emissions at the KTG glass melting furnaces #1, #2 and #3.

(J) Conoco Refinery allowable emission limitations from the refinery.

(*1*) Permit 90AD524, effective date March 20, 1991, regulating a Tulsa natural gas fired 20MMbtu/hour heater equipped with low-NO_X burners.

(*2*) Permit 90AD053, effective date March 20, 1991, regulating process heaters H–10, H–11 and H–27 and process boilers B4, B6, and B8 all burning fuel gas only.

(*3*) Permit 91AD180–3, effective December 28, 1992, regulating the three stage Claus sulfur recovery unit with tail gas recovery unit.

(ii) *Additional material.* (A) Regional Air Quality Council, ''Guidelines for Reducing Air Pollution from Street Sanding'' sets voluntary guidelines for public works departments to follow to reduce the amount of street sand applied, and includes recommendations for increasing the effectiveness of street cleaning operations.

(83) A revision to the Colorado State Implementation Plan was submitted by the Governor of the State of Colorado on April 22, 1996. The revision consists of an amendment to Colorado Air Quality Control Commission Regulation No. 7, ''Regulation To Control Emissions of Volatile Organic Compounds,'' to provide an exemption for beer production and associated beer container storage and transfer operations involving volatile organic compounds under 1.5 psia from certain bottom or submerged filling requirements that Regulation No. 7 otherwise imposes. The revision consists of the addition of paragraph C to section III, ''General Requirements for Storage and Transfer of Volatile Organic Compounds,'' of Regulation No. 7.

(i) *Incorporation by reference.* (A) Colorado Air Quality Control Commission Regulation No. 7, 5 CCR 1001–9, section III, paragraph C, adopted by the Colorado Air Quality Control Commission on March 16, 1995, State effective May 30, 1995.

(84) The Governor of Colorado submitted the Denver PM10 mobile source emissions budget State Implementation Plan (SIP) with a letter dated July 18, 1995. The Governor submitted the Denver NO_X mobile source emissions budget State Implementation Plan (SIP) with a letter dated April 22, 1996. The PM10 and NO_X mobile source emissions budgets and other provisions in these SIP submittals are used to assess conformity of transportation plans, transportation improvement programs, and transportation projects.

(i) *Incorporation by reference.* (A) Colorado Air Quality Control Commission, ''Ambient Air Quality Standards'' regulation 5CCR 1001–14, Section A.1. Budgets for the Denver Nonattainment Area (Modeling Domain) PM10, Sections A.2. and A.3., and Sections B and C, adopted on February 16, 1995, effective April 30, 1995, as amended by the Colorado General Assembly through enactment of Colorado Senate Bill 95–110, which Bill was enacted on May 5, 1995 and signed by the Governor of Colorado on May 31, 1995. (See paragraph (c)(84)(i)(B) of this section).

(B) Colo. Rev. Stat. section 25–7–105(1)(a)(III), enacted by the Colorado General Assembly on May 5, 1995 as part of Colorado Senate Bill 95–110 and signed by the Governor of Colorado on May 31, 1995.

(C) Colorado Air Quality Control Commission ''Ambient Air Quality Standards'' regulation 5CCR 1001–14, Section A.1. Budgets for the Denver Nonattainment Area (Modeling Domain) Nitrogen Oxides, as adopted June 15, 1995, effective August 30, 1995.

(85) On September 16, 1997, the Governor of Colorado submitted revisions to Regulation No. 10 ''Criteria for Analysis of Conformity'' that incorporate the General Conformity requirements of 40 CFR part 51, Subpart W into State regulation.

(i) *Incorporation by reference.* (A) Regulation No. 10 ''Criteria for Analysis of Conformity'', 5 CCR 1001–12, as adopted on October 17, 1996, effective December 30, 1996.

(86) On October 1, 1998, the Governor of Colorado submitted revisions to Regulation No. 13 ''Oxygenated Fuels Program'' that shortened the effective time period of the oxygenated fuels program for Denver/Boulder, Colorado Springs, Fort Collins, and Longmont carbon monoxide nonattainment areas and also reduced the required oxygen content during certain periods.

(i) *Incorporation by reference.* (A) Regulation No. 13 ''Oxygenated Fuels Program'', 5 CCR 1001–16, as adopted on January 16, 1998, effective March 30, 1998.

(87) On September 16, 1997, the Governor of Colorado submitted revisions to Regulations No. 3 and 7 and the

Common Provisions Regulation to update the State's list of negligibly reactive volatile organic compounds (VOCs) and to consolidate the list of negligibly reactive VOCs from Regulations No. 3 and 7 into the Common Provisions Regulation. The Governor also submitted revisions to Parts A and B of Regulation No. 3 on September 16, 1997 to amend the definition of ''applicable requirement'' and to correct typographical errors. On August 19, 1998, the Governor submitted revisions to the Common Provisions Regulation to update its list of negligibly reactive VOCs. The Governor also submitted revisions to Regulation No. 7 to repeal the requirements for control of VOC emissions from dry cleaning facilities using perchloroethylene as a solvent.

(i) *Incorporation by reference.* (A) Common Provisions Regulation, 5 CCR 1001–2, Section I.G., definition of ''negligibly reactive VOCs (NRVOCs)'' and subsection h. of the definition of ''net emissions increase,'' adopted 12/21/95, effective 3/1/96.

(B) Regulation No. 3, ''Air Contaminant Emission Notices,'' 5 CCR 1001–5, adopted 12/21/95, effective 3/1/96, as follows: Part A, subsection h. of the definition of ''net emissions increase'' in Section I.B.37.; and Part B, Section IV.D.4.

(C) Regulation No. 7, ''Emissions of Volatile Organic Compounds,'' 5 CCR 1001–9, Section II.B., adopted 12/21/95, effective 3/1/96.

(D) Regulation No. 3, ''Air Contaminant Emission Notices,'' 5 CCR 1001–5, adopted 6/20/96, effective 8/30/96, as follows: Part A, definition of ''applicable requirement'' in Section I.B.9., definition of ''major source (for the purposes of Part C—operating permits)'' in Section I.B.59., and Section V.C.12; and Part B, Section III.D.2.

(E) Common Provisions Regulation, 5 CCR 1001–2, Section I.G., definition of ''negligibly reactive VOCs (NRVOCs)'' adopted 11/21/96, effective 1/30/97.

(F) Regulation No. 7, ''Emissions of Volatile Organic Compounds,'' 5 CCR 1001–9, Section XII., adopted 11/21/96, effective 1/30/97.

(88) On April 26, 1996, the Governor of Colorado submitted revisions to Regulation No. 3 to allow a source to voluntarily request a permit to limit potential to emit and to require that such permits be subject to public participation.

(i) *Incorporation by reference.* (A) Regulation No. 3, ''Air Contaminant Emissions Notices,'' 5 CCR 1001–5, revisions adopted 5/18/95, effective 7/30/95, as follows: part B, sections III.A.4, III.A.7, and IV.C.4.

(89) On May 10, 2000, the Governor of Colorado submitted revisions to Regulation No. 13 ''Oxygenated Fuels Program'' that eliminated the Oxygenated Fuels Program for El Paso County and the Colorado Springs CO attainment/maintenance area.

(i) *Incorporation by reference.* (A) Regulation No. 13 ''Oxygenated Fuels Program'', 5 CCR 1001–16, as adopted on February 17, 2000, effective April 30, 2000, as follows: Sections I.D.19, II.A, II.A.1, II.A.2, II.C.1.a, II.C.1.b., and II.C.1.c.

(90) On May 10, 2000, the State of Colorado submitted maintenance plans for the Telluride and Pagosa Springs PM_{10} nonattainment areas and requested that these areas be redesignated to attainment for the PM_{10} National Ambient Air Quality Standards. The redesignation requests and maintenance plans satisfy all applicable requirements of the Clean Air Act.

(i) *Incorporation by reference.* (A) Colorado Air Quality Control Commission, ''State Implementation Plan Specific Regulations for Nonattainment—Attainment/Maintenance Areas (Local Elements),'' 5 CCR 1001–20, revisions adopted 3/16/00, effective 5/30/00, as follows: Section I., Pagosa Springs Attainment/Maintenance Area and Section II., Telluride Attainment/Maintenance Area.

(ii) *Additional material.* (A) January 24, 2001 letter from Margie Perkins, Director, Colorado Air Pollution Control Division, to Richard Long, Director, EPA Region VIII Air and Radiation Program, clarifying the commitments of the Verification of Continued Attainment section of the Telluride and Pagosa Springs maintenance plans.

(91) On May 10, 2000, the Governor of Colorado submitted revisions to the Colorado State Implementation Plan consisting of: Revisions to Regulation 12 to remove the ''Reduction of Diesel Vehicle Emissions'' program from

areas outside the Denver PM_{10} non-attainment area, and Regulation 9 ''Trip Reduction,'' effective on January 30, 1979, is rescinded.

(i) *Incorporation by reference.* (A) Revisions to Colorado Air Quality Control Commission Regulation No. 12, 5 CCR 1001–15, adopted by the Colorado Air Quality Control Commission on March 16, 2000, State effective May 30, 2000.

(92) On May 11, 2012, Colorado submitted a revision to its State Implementation Plan (SIP) that addresses updates to Colorado's Regulation Number 10, *Criteria for Analysis of Conformity*, of the Colorado SIP. EPA is approving the May 11, 2012 revisions to Regulation No. 10 that update sections I, II, III, IV, and V so as to meet federal transportation conformity consultation requirements. EPA is also approving the removal of former Part A, *Determining Conformity of General Federal Actions to State or Federal Implementation Plans*, from the SIP.

(i) Incorporation by reference.

(A) Colorado's Regulation Number 10, *Criteria for Analysis of Conformity*, except section VI, *Statements of Basis, Specific Statutory Authority, and Purpose*, as adopted by the Colorado Air Quality Control Commission on December 15, 2011 and state effective on January 30, 2012.

(93) On June 7, 2001, the Governor of Colorado submitted a revision to the long-term strategy portion of Colorado's State Implementation Plan (SIP) for Class I Visibility Protection. The revision was made to incorporate into the SIP emissions reduction requirements for the Craig Station (a coal-fired steam generating plant located near the town of Craig, Colorado). This SIP revision is expected to remedy Craig Station's contribution to visibility impairment in the Mt. Zirkel Wilderness Area.

(i) *Incorporation by reference.* (A) Revision of Colorado's State Implementation Plan for Class I Visibility Protection: Craig Station Units 1 and 2 Requirements, Section III, effective on April 19, 2001.

(94) On August 8, 1996, the Governor of Colorado submitted revisions to Regulation No. 3, ''Air Contaminant Emissions Notices,'' that exempt gasoline stations located in ozone attainment areas from construction permit requirements, with the exception of those gasoline stations located in the Denver Metro ozone attainment maintenance area. The Governor also submitted revisions to Regulation No. 7, ''Emissions of Volatile Organic Compounds,'' that state the provisions of Regulation No. 7 shall apply only to ozone nonattainment areas and the Denver Metro Attainment Maintenance Area with the exception of Section V, Paragraphs VI.B.1 and 2., and Subsection VII.C., which shall apply statewide.

(i) *Incorporation by reference.* (A) Part B, section III. D.1.f of Regulation No. 3 ''Air Contaminant Emissions Notices'', 5 CCR 1001–5, as adopted on March 21, 1996, effective May 30, 1996.

(B) Section I.A.1 of Regulation No. 7 ''Emissions of Volatile Organic Compounds'', 5 CCR 1001–9, as adopted on March 21, 1996, effective May 30, 1996.

(95) On July 30, 2001, the State of Colorado submitted a maintenance plan for the Denver PM_{10} nonattainment area and requested that the area be redesignated to attainment for the PM_{10} National Ambient Air Quality Standards. The maintenance plan deletes from the SIP Regulation No. 12, ''Diesel Inspection/Maintenance Program'' and permits for six stationary sources incorporated by reference in paragraphs (c)(91)(i)(A) and (c)(82)(i)(E) through (J), of this section respectively. In conjunction with the maintenance plan, Colorado revised previously approved regulations and requirements to control particulate matter (Regulation No. 1 and Regulation No. 16.) Among other changes, the revision to Regulation No. 1 includes the deletion of section VII.B of Regulation No. 1 from the SIP. Among other changes, the revision to Regulation No. 16 includes the deletion of sections III and IV of Regulation No. 16 from the SIP. The redesignation request, maintenance plan, and revisions to Regulations Nos. 1 and 16 satisfy all applicable requirements of the Clean Air Act.

(i) *Incorporation by reference.* (A) Section VII and VIII.A of Regulation No. 1, ''Emission Control for Particulates, Smokes, Carbon Monoxide, & Sulfur Oxides,'' 5 CCR 1001–3, as adopted August 16, 2001 and effective September

30, 2001. (See paragraph (c)(95)(ii)(I) of this section regarding clerical error in section VIII.A of Regulation No. 1.)

(B) Sections I and II, Regulation No. 16, ''Street Sanding Emissions,'' 5 CCR 1001–18, as adopted April 19, 2001, effective June 30, 2001.

(ii) *Additional material.* (A) Letter dated September 5, 2001 from Casey Shpall, Colorado Office of the Attorney General to Cindy Rosenberg, EPA Region 8, clarifying that public notice was given of the proposed changes and transmitting the appropriate documentation.

(B) Fax dated September 6, 2001 from Doug Lempke, Colorado Department of Public Health and Environment, to Cindy Rosenberg, EPA Region 8, submitting Colorado Attorney General's opinion concerning revisions to Regulation No. 16.

(C) Letter dated September 10, 2001 from Kevin Briggs, Colorado Department of Public Health and Environment, to Kevin Golden, EPA Region 8, transmitting model input files for maintenance demonstration.

(D) Letter dated September 13, 2001 from Casey Shpall, Colorado Office of the Attorney General to Cindy Rosenberg, EPA Region 8, explaining that an error occurred in the publication of Colorado Regulation No. 1.

(E) Letter dated November 27, 2001 from Margie Perkins, Colorado Department of Public Health and Environment, to Richard Long, EPA Region 8, transmitting the justification for the revised street sweeping credits used in the PM_{10} maintenance plan.

(F) Letter dated April 5, 2002 from Margie Perkins, Colorado Department of Public Health and Environment, to Richard Long, EPA Region 8, transmitting a supplement to the Technical Support Documentation correcting the emission rates used in the PM_{10} maintenance plan for Conoco and Ultramar Diamond Shamrock.

(G) Complaint and Consent Decree in *United States* v. *Conoco Inc.*, entered by the United States District Court for the Southern District of Texas on April 29, 2002.

(H) July 31, 2002 memorandum from Cindy Rosenberg, EPA Region 8, to the Denver PM_{10} Redesignation and Maintenance Plan Docket, regarding the August 16, 2001 version of Regulation No. 1, ''Emission Control for Particulates, Smokes, Carbon Monoxide, & Sulfur Oxides.''

(I) Letter dated July 31, 2002 from Frank R. Johnson, Assistant Attorney General, Colorado Department of Law, to Jonah Staller, EPA Region 8, explaining a clerical error in the version of Regulation No. 1 referenced in paragraph (c)(95)(i)(A) of this section, assuring the continued enforceability of section VIII.A of Regulation No. 1 regardless of the air quality classification of the Denver area, and indicating that the clerical error will be promptly remedied.

(96) On May 10, 2000, the Governor of Colorado submitted SIP revisions to Colorado's Regulation No. 11 ''Motor Vehicle Emissions Inspection Program'' that supersede and replace all earlier versions of the Regulation (except Appendices A and B of Regulation No. 11 as approved in paragraph (c)(80)) and make several changes to the motor vehicle inspection and maintenance requirements including the implementation of a remote sensing device (RSD) program for the Denver metropolitan area. On May 10, 2000, the Governor also submitted SIP revisions to Colorado's Regulation No. 13 : ''Oxygenated Fuels Program'' that supersede and replace all earlier versions of the Regulation and modify the oxygenated fuel requirements for the Denver metropolitan area.

(i) *Incorporation by reference.* (A) Regulation No. 11 ''Motor Vehicle Emissions Inspection Program'', 5 CCR 1001–13, as adopted on January 10, 2000, effective March 1, 2000, as follows: Part A, Part B, Part C, Part D, Part E, and Part F.

(B) Regulation No. 13 ''Oxygenated Fuels Program'', 5 CCR 1001–16, as adopted on January 10, 2000, effective March 1, 2000, as follows: Sections I.A., I.B., I.C., I.D., I.E., II.A, II.B., II.C., II.D., II.E., II.F., II.G., and II.H.

(97) On November 9, 2001, the State of Colorado submitted a maintenance plan for the Aspen PM_{10} nonattainment area and requested that this area be redesignated to attainment for the PM_{10} National Ambient Air Quality Standards. The redesignation request and

maintenance plan satisfy all applicable requirements of the Clean Air Act.

(i) *Incorporation by reference.* (A) Colorado Air Pollution Control Division, ''State Implementation Plan—Specific Regulations for Nonattainment—Attainment/Maintenance Areas (Local Areas),'' 5 CCR 1001–20, revisions adopted January 11, 2001, effective February 28, 2001 as follows: Section III, which is titled ''Aspen/Pitkin County PM_{10} Attainment/Maintenance Area,'' and which supersedes and replaces all prior versions of Section III.

(98) On November 5, 1999 the Governor of Colorado submitted a revision to Regulation No. 1, ''Emission Control for Particulates, Smokes, Carbon Monoxide and Sulfur Dioxide.'' The November 5, 1999 submittal exempts military training exercises at the United States Army Installation Fort Carson and United States Army Pinon Canon Maneuver Site (PCMS) from opacity limits. A new subsection D to Regulation No. 1, section II, has been approved into the SIP.

(i) *Incorporation by reference.* (A) Colorado Regulation No. 1, section II, subsection D effective September 30, 1998.

(99) On August 9, 2002, the Governor of Colorado submitted SIP revisions to Colorado's Regulation No. 11 ''Motor Vehicle Emissions Inspection Program'' that eliminate the requirement in the SIP for the implementation of a motor vehicle inspection and maintenance program in Larimer County (which includes the Fort Collins area) after January 1, 2004. On August 9, 2002, the Governor also submitted SIP revisions to Colorado's Regulation No. 13 ''Oxygenated Fuels Program'' that eliminate the oxygenated fuel requirements for Larimer County (which includes the Fort Collins area) after January 1, 2004, and make changes to sections I.D., II.A., II.B., II.C., II.D., II.E., II.F., II.G., and II.H. On August 9, 2002, the Governor also submitted SIP revisions to Colorado's State Implementation Plan Specific Regulations for Nonattainment and Attainment/Maintenance Areas (Local Elements) that eliminate Clean Air Act section 172(c)(9) carbon monoxide contingency measures for the Fort Collins area. We originally approved these contingency measures on December 23, 1997, and our approval was codified in paragraph (c)(71) of this section.

(i) *Incorporation by reference.* (A) Regulation No. 11 ''Motor Vehicle Emissions Inspection Program'', 5 CCR 1001–13, Part A.I, as adopted on July 18, 2002, and effective September 30, 2002.

(B) Regulation No. 13 ''Oxygenated Fuels Program'', 5 CCR 1001–16, except for section III, the last sentence in Section II.C.1.c.v., ''This Section II.C.1.c.v. is repealed effective February 1, 2019 and is replaced by the requirements in Section II.C.1.c.vi. below beginning November 1, 2019.,'' and Section II.C.1.c.vi., as adopted on July 18, 2002, effective September 30, 2002, which supersedes and replaces all prior versions of Regulation No. 13.

(100) EPA is approving a SIP revision submitted by the Governor of Colorado on July 31, 2002, concerning the use of credible evidence for determining compliance and establishing violations. The July 31, 2002 submittal revises Colorado Air Quality Control Commission (AQCC) Common Provisions Regulation by adding Section II.I, Compliance Certifications. Section II.I of Colorado AQCC Common Provisions Regulation is approved into the SIP.

(i) *Incorporation by reference.* (A) Colorado Air Quality Control Commission Common Provisions Regulation, Section II.I, effective September 30, 2001.

(101) On July 31, 2002, the State of Colorado submitted a maintenance plan for the Steamboat Springs PM_{10} nonattainment area and requested that this area be redesignated to attainment for the PM_{10} National Ambient Air Quality Standards. The redesignation request and maintenance plan satisfies all applicable requirements of the Clean Air Act.

(i) *Incorporation by reference.* (A) Colorado Air Quality Control Commission, ''State Implementation Plan—Specific Regulations for Nonattainment—Attainment/Maintenance Areas (Local Elements),'' 5 CCR 1001–20, revisions adopted November 15, 2001, effective December 30, 2001 as follows: Section VIII., titled ''Steamboat Springs PM_{10} Attainment/Maintenance Area'' and supersedes and replaces all prior versions of Section VIII.

(102) [Reserved]

(103) On April 12, 2004, the Governor of Colorado submitted revisions to Regulation No. 11 ''Motor Vehicle Emissions Inspection Program'' that eliminated the Federal applicability of the Basic I/M program for El Paso County and the Colorado Springs CO attainment/maintenance area.

(i) *Incorporation by reference.* (A) Regulation No. 11 ''Motor Vehicle Emissions Inspection Program'', 5 CCR 1001–13, as adopted on December 18, 2003, effective March 1, 2004, as follows: Part A.I., ''Applicability,'' final sentence of paragraph 2.

(104) On June 20, 2003, the Governor of Colorado submitted SIP revisions to Colorado's Regulation No. 11 ''Motor Vehicle Emissions Inspection Program'' that eliminate the requirement in the SIP to implement a motor vehicle inspection and maintenance program in Weld County (which includes the Greeley area) after January 1, 2004. On June 20, 2003, the Governor also submitted SIP revisions to Colorado's Regulation No. 13 ''Oxygenated Fuels Program'' that eliminate the oxygenated fuel requirements for Weld County (which includes the Greeley area) after January 1, 2004.

(i) *Incorporation by reference.* (A) Regulation No. 11 ''Motor Vehicle Emissions Inspection Program'', 5 CCR 1001–13, Part A.I, second sentence that reads, ''The provisions of this regulation applicable to Larimer and Weld counties shall not be included in the state implementation plan after January 1, 2004.'', as adopted on December 19, 2002, and effective March 2, 2003.

(B) Regulation No. 13 ''Reduction of Carbon Monoxide Emissions from Gasoline Powered Motor Vehicles through the use of Oxygenated Gasolines,'' 5 CCR 1001–16, Part I.D.15, Part II.A, Part II.C, as adopted on December 19, 2002, and effective March 2, 2003.

(105) Revisions to the Long-Term Strategy of Colorado's State Implementation Plan for Class I Visibility Protection (Visibility SIP), as submitted by the Governor on April 12, 2004. The revisions update strategies, activities, and plans that constitute reasonable progress toward the National visibility goal.

(i) *Incorporation by reference.* (A) ''Revision of the Long-Term Strategy,'' (Part II of the January 31, 2002 document entitled ''Long-Term Strategy Review and Revision of Colorado's State Implementation Plan for Class I Visibility Protection,'') effective on February 21, 2002.

(106) On July 31, 2002, the State of Colorado submitted a maintenance plan for the Lamar PM_{10} nonattainment area and requested that this area be redesignated to attainment for the PM_{10} National Ambient Air Quality Standards. The redesignation request and maintenance plan satisfy all applicable requirements of the Clean Air Act.

(i) *Incorporation by reference.* (A) Colorado Air Quality Control Commission, ''State Implementation Plan—Specific Regulations for Nonattainment—Attainment/Maintenance Areas (Local Elements),'' 5 CCR 1001–20, revisions adopted November 15, 2001, effective December 30, 2001 as follows: Section IV, titled ''Lamar Attainment/Maintenance Area,'' and which supersedes and replaces all prior versions of Section IV.

(ii) *Additional material.* (A) Colorado Department of Public Health and Environment, ''Natural Events Action Plan for High Wind Events, Lamar, Colorado,'' submitted to EPA on February 9, 1998 and subsequently approved by EPA, June 5, 1998 and Lamar's revised 2003 ''Natural Events Action Plan for High Wind Events, Lamar, Colorado,'' submitted to EPA on April 16, 2003 and subsequently approved by EPA, February 9, 2004.

(107) On July 21, 2004, the Governor submitted revisions to the Colorado State Implementation Plan for Colorado's Common Provisions Regulation that contained a definition for condensate. On July 21, 2004, and on March 24, 2005, the Governor also submitted revisions to the Colorado State Implementation Plan for Colorado's Regulation No. 7 ''Emissions of Volatile Organic Compounds'' that made several changes and additions to sections I.A., I.B., II.A and added new sections XII and XVI. The March 24, 2005 version of Regulation No. 7 superceded and replaced portions of the July 21, 2004 version of Regulation No. 7. On June 20, 2003, April 12 2004, and July 21, 2004, the

Governor of Colorado submitted revisions to the Colorado State Implementation Plan for Colorado's Regulation No. 11 ''Motor Vehicle Emissions Inspection Program.''

(i) *Incorporation by reference.* (A) Common Provisions Regulation, 5 CCR 1001–2, as adopted on March 12, 2004, effective on May 30, 2004, as follows: Section I.G, definition of ''Condensate.''

(B) Regulation No. 7 ''Emissions of Volatile Organic Compounds,'' 5 CCR 1001–9, as adopted on March 12, 2004, effective on May 31, 2004, as follows: Sections I.A.1, I.A.1.a, I.A.1.b, I.A.1.c, I.B.1.b, and I.B.2.f. As adopted on December 16, 2004, effective March 2, 2005, as follows: Sections I.A.2, II.A.16, II.A.17, XII, and XVI.

(C) Regulation No. 11 ''Motor Vehicle Emissions Inspection Program,'' 5 CCR 1001–13, with changes most recently adopted on March 12, 2004, effective May 31, 2004, as follows: Part A, Part B, Part C, Part D, Part E, Part F, and Appendices A and B, except for the following sentence in Part A.I, which is being acted on separately: ''The provisions of this regulation applicable to Larimer and Weld counties shall not be included in the state implementation plan after January 1, 2004.'' On August 8, 2006, Colorado submitted revisions to Colorado's Regulation Number 11—Motor Vehicle Emissions Inspection Program, part F, section III.A.2, that EPA approved and that superseded the version of section III.A.2 that EPA incorporated by reference in this paragraph. See § 52.329(f).

(ii) *Additional material.* (A) March 22, 2005, letter from Margie Perkins, Director, Air Pollution Control Division, Colorado Department of Public Health and Environment, to Richard Long, Director, Air and Radiation Program, EPA Region VIII. This letter contained commitments from the State to adhere to and address the continuing planning process requirements contained in the ''Maintenance for Growth'' provisions of EPA's ''Protocol for Early Action Compacts Designed to Achieve and Maintain the 8–Hour Ozone Standards.''

(108) Revisions to the Long-Term Strategy of Colorado's State Implementation Plan for Class I Visibility Protection (Visibility SIP), as submitted by the Governor on March 24, 2005. The revisions update strategies, activities, and monitoring plans that constitute reasonable progress toward the National visibility goal.

(i) *Incorporation by reference.* (A) ''Revision of the Long-Term Strategy,'' Part II of the November 18, 2004 document entitled ''Long-Term Strategy Review and Revision of Colorado's State Implementation Plan for Class I Visibility Protection,'' effective November 18, 2004.

(B) Colorado Air Quality Control Commission Regulation No. 3, ''Stationary Source Permitting and Air Pollutant Emission Notice Requirements,'' 5 CCR 1001–5, Part D, Section XIV, Visibility, Subsections A through F, effective April 16, 2004.

(C) Colorado Air Quality Control Commission, Regulation Number 3, 5 CCR 1001–5, *Stationary Source Permitting and Air Pollutant Emission Notice Requirements,* Part D, *Concerning Major Stationary Source New Source Review and Prevention of Significant Deterioration,* Section XIV.F, *Long Term Strategy,* subsection XIV.F.1. introductory text and XIV.F.1.c; adopted January 7, 2011; effective February 14, 2011.

(109) A revision to the State Implementation Plan was submitted by the State of Colorado on July 31, 2002. The submittal revises the Common Provisions regulation by adding affirmative defense provisions for source owners and operators for excess emissions during periods of startup and shutdown.

(i) Incorporation by reference.

(A) Common Provisions Regulation, 5 CCR 1001–2, sections II.J.1 through II.J.4, adopted August 16, 2001, effective September 30, 2001.

(110) A Revision to the State Implementation Plan was submitted by the State of Colorado on April 12, 2004. The revision corrects a clerical error in Section VIII.A of Regulation No. 1.

(i) Incorporation by reference.

(A) Colorado Regulation No. 1, 5CCR 1001–3, Section VIII.A, adopted June 19, 2003, effective August 31, 2003.

(111) On August 8, 2006, the Governor of Colorado submitted SIP revisions to Colorado's Regulation No. 11 ''Motor Vehicle Emissions Inspection Program'' that repeals the basic vehicle

emissions inspection program in the Fort Collins and Greeley areas.

(i) Incorporation by reference.

(A) Regulation No. 11 ''Motor Vehicle Emissions Inspection Program,'' 5CCR1001–13, Part A.1 and Part A.IV, as adopted on November 17, 2005, and effective January 30, 2006.

(112) On August 3, 2007, the Governor of Colorado submitted revisions to the Colorado's Regulation No. 7 ''Emissions of Volatile Organic Compounds'' that made several changes and additions to Section XII, ''Volatile Organic Compound Emissions From Oil and Gas Operations.''

(i) Incorporation by reference.

(A) Regulation No. 7 ''Emissions of Volatile Organic Compounds,'' 5 CCR 1001–9, Section XII, ''Volatile Organic Compound Emissions From Oil and Gas Operations,'' effective on March 4, 2007.

(113) On August 1, 2007, the State of Colorado submitted revisions to Colorado's Common Provisions Regulation, 5 CCR 1001–2, that made changes and additions to Section I, ''Definitions, Statement of Intent, and General Provisions Applicable to All Emission Control Regulations Adopted by the Colorado Air Quality Control Commission,'' and Section II, ''General.''

(i) Incorporation by reference.

(A) Common Provisions Regulation, 5 CCR 1001–2, Section I.G, ''Definitions,'' effective on March 4, 2007.

(*1*) The submittal revises Section I.G by removing the definition of ''upset conditions'' and replacing it with the definition of ''malfunction.''

(B) Common Provisions Regulation, 5 CCR 1001–2, Section II.E, ''Affirmative Defense Provision for Excess Emissions During Malfunctions,'' effective on March 4, 2007.

(*2*) The submittal revises Section II.E by removing language which provided an exemption for excess emissions during upset conditions and breakdowns and replacing it with an affirmative defense provision for source owners and operators for excess emissions during malfunctions.

(114) On August 1, 2007, the State of Colorado submitted revisions to Colorado Regulation Number 1 to be incorporated into the Colorado SIP. The submittal revised Section III.B.2. by adding ''and air curtain destructors subject to 40 CFR 60'' to the first sentence of Section III.B.2.

(i) Incorporation by reference.

(A) 5 CCR 1001–3, Code of Colorado Regulations, Regulation Number 1, Emission Control for Particulates, Smokes, Carbon Monoxide and Sulfur Oxides, PARTICULATE MATTER, Section III.B.2, ''Incinerators,'' effective on November 30, 2006, published in Colorado Register, Volume 29, Number 11.

(115) On July 31, 2003, the State of Colorado submitted revisions to Colorado's 5 CCR 1001–3, Regulation 1, that deleted Sections II.A.6, A.7, A.9 and C.3, regarding, respectively, alfalfa dehydrating plant drum dryers, wigwam burners, the static firing of Pershing missiles and a notice regarding waste materials. The State also deleted emission limitations for alfalfa plant drum dyers by removing Section III.C.2. Colorado's deletion of Sections II. A6, A.7 and A.9 and Section III.C.2 will cause a numbering change of subsequent paragraphs within Sections II.A and III.C. EPA is adopting the new numbering scheme for sections II.A. and III C. Section II.C.2.d. regarding agricultural open burning is modified to include the burning of diseased animal carcasses to prevent a public health emergency. Section III.A.1.d is modified for incorporation of new State's method for calculating emissions from multiple fuel burning units ducted to a common stack. Section V is added regarding emission standards for electric arc furnaces, except for the director's discretion provision provided for in Section V.A.2. Sections VI.A.3.e, VI.A.3.f, VI.B.4.e, and VI.B.4.g(ii) are modified regarding the methods used for the averaging of emissions over a 24 hour period.

(i) Incorporation by reference.

(A) 5 CCR 1001–3, Regulation 1, Emission Control for Particulates, Smokes, Carbon Monoxide and Sulfur Oxides, Section II, Smoke and Opacity, Section II.C.2.d, effective March 2, 2002.

(B) 5 CCR 1001–3, Regulation 1, Emission Control for Particulates, Smokes, Carbon Monoxide and Sulfur Oxides, Section III, Particulate Matter, Fuel Burning Equipment, Section III.A.1.d, effective September 30, 2001.

(C) 5 CCR 1001–3, Regulation 1, Emission Control for Particulates, Smokes,

Carbon Monoxide and Sulfur Oxides, Section V, Emission Standard for Existing Iron and Steel Plant Operations, effective September 30, 2001.

(*1*) The submittal contains Section V.A.2 with the language:

''Emissions from gas-cleaning device shall not exceed a mass emission rate of 0.00520 gr/dscf of filterable particulates maximum two-hour average, as measured by EPA Methods 1–4 and the front half of Method 5 (40 CFR 60.275, and Appendix A, Part 60), or by other credible method approved by the Division. This particulate emissions standard does not include condensable emissions, or the back half emissions of Method 5''. The language ''or by other credible method approved by the Division'' is disapproved. The language ''Appendix A, Part 60'' is changed to ''appendices A1 through A3, Part 60'' in order to comply with the current nomenclature of Part 60.

(D) 5 CCR 1001–3, Regulation 1, Emission Control for Particulates, Smokes, Carbon Monoxide and Sulfur Oxides, Section VI, Sulfur Dioxide Emission Regulations, Sections VI.A.3.e, VI.A.3.f, VI.B.4.e, and VI.B.4.g(ii), effective September 30, 2001.

(*1*) Sections VI.B.4.e and VI.B.4.g(ii) list an emission rate of 0.7 lbs. sulfur dioxide, for the sum of all SO_2 emissions from a given refinery per barrel of oil processed, per day. This emission rate is disapproved. The emission rate remains unchanged at 0.3 lbs. All remaining language within Sections VI.B.4.e and VI.B.4.g(ii) is approved.

(116) On June 20, 2003, the State of Colorado submitted revisions to Colorado's Regulation 3 Regulation, 5 CCR 1001–5, that place restrictions on increment consumption, add innovative control technology as an alternative to BACT requirements, and changed or deleted numerous definitions in Part A. The State in Part B revised construction permit review requirements regarding RACT for minor sources in attainment/maintenance areas. The State made the restrictions on maximum allowable increases of sulfur dioxide concentrations over baseline concentrations in Class I areas also applicable to certain Class II areas, such as certain National Monuments that are not Class I areas. Increment consumption restrictions were added to limit major stationary sources from consuming more than 75 percent of an applicable increment. The State added the use of innovative control technology by a source in lieu of BACT requirements in order to encourage the use of such technology. The revisions to both Parts and B also included minor changes designed to fix ambiguous language, to make the definitions more readable or to delete obsolete or duplicative definitions. On April 12, 2004, the State of Colorado submitted a minor revision to Part A, Section I.A regarding the availability of material incorporated by reference.

(i) Incorporation by reference.

(A) Regulation 3, 5 CCR 1001–5, AIR CONTAMINANT EMISSIONS NOTICES, Part A, Concerning General Provisions Applicable to Construction Permits and Operating Permits, effective December 2002 and April 2003 with the following exceptions:

(*1*) Section I.B.36.b.(iii)(G) provisions related to Pollution Control Projects

(*2*) Section I.B.40.c.(ii) Submittal of an application for a nonroad engine permit, State-only requirement

(*3*) Section IV. C., Emissions Trading under Permit Caps

(*4*) Section V.F.5, Criteria for Approval of all Transactions, deleting the requirement that trading transactions may not be used inconsistently with or to circumvent requirements of LAER

(B) Regulation 3, 5 CCR 1001–5, AIR CONTAMINANT EMISSIONS NOTICES, Part B, Concerning Construction Permits including Regulations for the Prevention of Significant Deterioration (PSD), Area Classifications, Part B, Section V.B., effective December 2002 with the following exceptions:

(*1*) Section III.D.1.c(iii), Exemption from Construction Permit Requirements, Uncontrolled Emissions

(*2*) Section IV.B.2, Application for a Construction Permit, and Section IV.H.8, Application for a Final Permit, regarding operating and maintenance plans and recordkeeping formats.

(117) On June 18, 2009, the State of Colorado submitted an 8–Hour Ozone Attainment Plan for the Denver Metro Area/North Front Range area to meet the requirements of 40 CFR 81.300(e)(3)(ii)(D) for the 1997 8-hour

ozone NAAQS. On the same date, the State of Colorado also submitted revisions to portions of Part A, ''Concerning General Provisions Applicable to Reporting and Permitting,'' and Part B, ''Concerning Construction Permits,'' of Colorado's Regulation No. 3, ''Air Contaminant Emissions Notices,'' and to Sections I through XVI of Colorado's Regulation No. 7, ''Control of Ozone Via Ozone Precursors (Emissions of Volatile Organic Compounds and Nitrogen Oxides).'' EPA is approving the Ozone Attainment Plan except for the last paragraph on page IV–1 and the first paragraph on page IV–2, the words ''federally enforceable'' in the second to last paragraph on page V–6, and the reference to Attachment A in the Table of Contents and on page IV–3. EPA is disapproving the excepted language from the Ozone Attainment Plan. EPA is approving the revisions to portions of Parts A and B of Colorado's Regulation No. 3. For purposes of this action, Colorado Regulation No. 3, Part B, Sections II.D.1.k, l, m, and n, as incorporated below, should be considered an addition to and as immediately following Colorado Regulation Number 3, Part B, Sections III.D.1.a through j, as previously approved by EPA. EPA is approving the revisions to Sections I through XI and XIII through XVI of Colorado's Regulation No. 7, except for Colorado's repeal of section II.D. EPA is disapproving Colorado's repeal of Section II.D and Colorado's revisions to Section XII of Regulation No. 7. EPA is not acting on the provisions in Regulation No. 7 that are designated ''State Only.''

(i) *Incorporation by reference.*

(A) 5 CCR 1001–5, Colorado Regulation No. 3, ''Air Contaminant Emissions Notices,'' Part A, ''Concerning General Provisions Applicable to Reporting and Permitting,'' Sections II.D.1.m, II.D.1.ee, II.D.1.uu, II.D.1.ccc, II.D.1.ddd, II.D.1.uuu, and II.D.1.eeee, effective January 30, 2009.

(B) 5 CCR 1001–5, Colorado Regulation No. 3, ''Air Contaminant Emissions Notices,'' Part B, ''Concerning Construction Permits,'' Sections II.D.1.k, l, m, and n, effective January 30, 2009.

(C) Letter dated November 18, 2009 from the Office of the Colorado Attorney General, signed by Jerry Goad, to Candy Herring, Office of the Colorado Secretary of State, regarding clerical errors in Regulation No. 7, and those portions of 5 CCR 1001–9, Colorado Regulation No. 7, ''Control of Ozone Via Ozone Precursors (Emissions of Volatile Organic Compounds and Nitrogen Oxides),'' Section II.C.1 that accompanied such letter, except for the following: the parenthetical phrase ''(State Only: Located in any Ozone Nonattainment Area or Attainment Maintenance Area)'' at II.C.1; Section II.C.1.a.(v); Section II.C.1.c; and Section II.C.1.d.

(D) 5 CCR 1001–9, Colorado Regulation No. 7, ''Control of Ozone Via Ozone Precursors (Emissions of Volatile Organic Compounds and Nitrogen Oxides),'' Sections I through XI and XIII through XVI, effective January 30, 2009, except for the following: Section I.A.1.b; Section I.B.1.b; Section I.B.2.b; Section I.B.2.d; Section II.A.12; Section II.C.1; and the repeal of Section II.D.

(118) On June 20, 2003, the State of Colorado submitted revisions to Colorado's Common Provisions Regulation, 5 CCR 1001–2, that revised the definitions of continuous monitoring system, emergency power generator, enforceable, federally enforceable, manufacturing process or process equipment, and volatile organic compounds. Deleted definitions included but were not limited to actual emissions, Best Available Control Technology (BACT), Lowest Achievable Emission Rate (LAER), and what conditions determine the modification of a source. These definitions were deleted in the Common Provisions because they appear in Colorado's Regulation 3. The State clarified that fuel burning equipment emissions are considered a part of the manufacturing process emissions when the emissions are vented through a common stack.

However, fuel burning equipment emissions vented from a separate stack are subject to regulations unique to fuel burning equipment. In addition, the State deleted and reserved Section III of the Common Provisions regarding smoking gasoline powered motor vehicles. The provisions regarding smoking gasoline powered motor vehicles were considered by the State to be obsolete. The revisions to the Common

Provisions also included minor changes designed to fix ambiguous language, to make the definitions more readable or to delete obsolete or duplicative definitions.

(i) Incorporation by reference.

(A) 5 CCR 1001–2, COMMON PROVISIONS REGULATION, Section 1., Definitions, Statement of Intent, and General Provisions Applicable to all Emission Control Regulations Adopted by the Colorado Air Quality Control Commission, except I.G, the definitions for ''Construction'' and ''Day''; Section II, General, except II.E, II.I, and II.J; effective on September 30, 2002.

(119) The State of Colorado submitted revisions on September 16, 1997, June 20, 2003, July 11, 2005, August 8, 2006 and August 1, 2007 to Colorado's 5 CCR 1001–5 Regulation Number 3, Part A, Section II. The August 1, 2007 submittal included a renumbering of sections in II.B and II.D. The incorporation by reference in (c)(119)(i)(A) reflects the renumbered provisions as of the August 1, 2007 submittal. Additionally, the State of Colorado deleted sections II.B.7., II.B.8., II.B.9., II.B.10., and II.D.7. without replacement. The deletion of these provisions has been incorporated by reference at (c)(72)(i)(F) of this section, the paragraph containing the original incorporation by reference of the provisions.

(i) Incorporation by reference.

(A) 5 CCR 1001–5, Regulation 3, *Stationary Source Permitting and Air Pollutant Emission Notice Requirements*, Part A, *Concerning General Provisions Applicable to Reporting and Permitting*, Section II, *Air Pollutant Emission Notice (APEN) Requirements*, Sections II.A, *Air Pollutant Emission Notices for New, Modified, and Existing Sources;* II. B, *General;* II.B.1, *Emission Estimate;* II.B.1.b, *Other engineering calculations;* II.B.2, *Air Pollutant Emission Notice Term;* II.B.3, *APEN Applicability;* II.B.3.a, *Criteria Pollutants;* II.B.4.a; II.B.4.b; II.B.4.c; II.B.4.d; II.B.4.e; II.B.4.f; the undesignated text immediately following II.B.4.f and preceding II.B.5; II.B.5; II.B.6; II.C, *Revised Air Pollutant Emission Notices;* II.C.1; II.C.1.a; II.C.1.h; II.C.2; II.C.2.b; II.C.3; II.D, *Exemptions from Air Pollutant Emission Notice Requirements;* II.D.1; the undesignated text immediately following II.D.1 and preceding II.D.1.a; II.D.1.a; II.D.1.f; II.D.1.g; II.D.1.h; II.D.1.i (excluding subprovisions); II.D.1.j; II.D.1.k; II.D.1.n; II.D.1.x; II.D.1.y; II.D.1.aa; II.D.1.bb; II.D.1.kk; II.D.1.nn; II.D.1.oo; II.D.1.aaa; II.D.1.bbb; II.D.1.ccc; II.D.1.fff; II.D.1.ggg; II.D.1.lll; the undesignated text immediately following II.D.1.lll and preceding II.D.1.mmm; II.D.1.nnn., II.D.1.ooo; II.D.1.ppp; II.D.1.qqq; II.D.1.rrr; II.D.1.vvv; II.D.1.www; II.D.1.yyy; II.D.1.zzz; II.D.1.aaaa; II.D.1.bbbb; II.D.1.cccc; II.D.1.dddd; II.D.2; II.D.3; II.D.4; II.D.5; II.D.6; effective October 30, 2006.

(120) The State of Colorado submitted revisions on October 25, 2005 and August 1, 2007 to Colorado's 5 CCR 1001–5 Regulation Number 3, Part D. The October 25, 2005 submittal included a renumbering of Regulation Number 3. The incorporation by reference in paragraph (c)(120)(i)(A) on this section reflects the renumbered sections as of the October 25, 2005 submittal. Sections were removed from Part D between the October 25, 2005 and August 1, 2007 submittal. The incorporation by reference in paragraph (c)(120)(i)(B) of this section reflects the numbering of the sections as of the August 1, 2007 submittal.

(i) Incorporation by reference.

(A) 5 CCR 1001–5, Regulation 3, *Stationary Source Permitting and Air Pollutant Emission Notice Requirements*, Part D, *Concerning Major Stationary Source New Source Review and Prevention of Significant Deterioration*, adopted April 16, 2004 and effective June 30, 2004:

(*1*) Section I, *Applicability*, Sections I.A., *General Applicability;* I.A.1;

(*2*) Section II, *Definitions*,

(*i*) II.A;

(*ii*) II.A.1, *Actual Emissions;* II.A.1.a (only the language that appears in plain or underlined text and not the language that appears as italicized text); II.A.1.b; II.A.1.c; II.A.1.e;

(*iii*) II.A.3, *Air Quality Related Value;*

(*iv*) II.A.5, *Baseline Area;*

(*v*) II.A.6, *Baseline Concentration;*

(*vi*) II.A.8, *Best Available Control Technology* (*BACT*) (the language that appears in plain or underlined text but not language that appears as italicized text, with the following exception—EPA is incorporating italicized text and is not incorporating underlined text when the combined effect of that

action is to replace the phrase ''air pollutant regulated under the Federal Act'' (or an equivalent phrase) with the term ''regulated NSR pollutant'');

(*vii*) II.A.12, *Complete;*

(*viii*) II.A.16, *Federal Land Manager (FLM);*

(*ix*) II.A.19, *Innovative Control Technology;*

(*x*) II.A.21, *Lowest Achievable Emission Rate (LAER);* II.A.21.a; II.A.21.b (only the language that appears in plain or underlined text and not the language that appears as italicized text);

(*xi*) II.A.23, *Major Modification* (the language that appears in plain or underlined text but not language that appears as italicized text, with the following exception—EPA is incorporating italicized text and is not incorporating underlined text when the combined effect of that action is to replace the phrase ''air pollutant regulated under the Federal Act'' (or an equivalent phrase) with the term ''regulated NSR pollutant''); II.A.23.b; II.A.23.c; II.A.23.d; II.A.23.d(i); II.A.23.d(ii); II.A.23.d(iv); II.A.23.d.(v); II.A.23.d.(vi); II.A.23.d.(vii); II.A.23.d.(ix); II.A.23.f;

(*xii*) II.A.24, *Major Source Baseline Date;*

(*xiii*) II.A.25, *Major Stationary Source;* II.A.25.a; II.A.25.c; II.A.25.e; II.A.25.f;

(*xiv*) II.A.26, *Minor Source Baseline Date;*

(*xv*) II.A.27, *Net Emissions Increase;* II.A.27.a; (the language that appears in plain or underlined text and the addition of the italicized phrase ''With respect to any regulated NSR pollutant emitted by any major stationary source''); II.A.27.a.(i) (only the language that appears in plain or underlined text and not the language that appears as italicized text); II.A.27.a.(ii) (only the language that appears in plain or underlined text and not the language that appears as italicized text); II.A.27.b (only the language that appears in plain or underlined text and not the language that appears as italicized text); II.A.27.c; II.A.27.c.(i); II.A.27.c(ii); II.A.27.c(iii); II.A.27.d; II.A.27.e; II.A.27.f; II.A.27.g; II.A.27.g.(i); II.A.27.g.(ii); II.A.27.g.(iii) (only the language that appears in plain or underlined text and not the language that appears as italicized text); II.A.27.g.(iv); II.A.27.h; II.A.27.j; II.A.27.k, *Creditable Decreases for Fuel Switching;*

(*xvi*) II.A.40, *Regulated NSR Pollutant;* II.A.40.a; II.A.40.b; II.A.40.d; II.A.40.e;

(*xvii*) II.A.43, *Secondary Emissions* (only the language that appears in plain or underlined text and not the language that appears as italicized text);

(*xviii*) II.A.44, *Significant;* II.A.44.b; II.A.44.c;

(*xix*) II.A.45, *Significant Emissions Increase;*

(*3*) Section III, *Permit Review Procedures;*

(*4*) Section IV, *Public Comment Requirements;*

(*5*) Section V, *Requirements Applicable to Nonattainment Areas*, Sections V.A, *Major Stationary Sources;* V.A.1; V.A.2; V.A.3; V.A.3.d; V.A.4; V.A.5; V.A.6; V.A.7, *Applicability of Certain Nonattainment Area Requirements;* V.A.7.a; V.A.7.b; V.A.8, *Exemptions from certain nonattainment area requirements;*

(*6*) Section VI, *Requirements applicable to attainment and unclassifiable areas and pollutants implemented under section 110 of the Federal Act (Prevention of Significant Deterioration Program)*, Sections VI.A, *Major Stationary Sources and Major Modifications;* VI.A.1, *Control Technology Review;* VI.A.1.a; VI.A.1.b; VI.A.1.c (only the language that appears in plain or underlined text and not the language that appears as italicized text); VI.A.2, *Source Impact Analysis;* VI.A.3, *Pre-construction Monitoring and Analysis;* VI.A.4, *Post-Construction Monitoring;* VI.A.5, *Operation of Monitoring Stations;* VI.A.6, *Additional Impact Analysis* (only the language that appears in plain or underlined text and not the language that appears as italicized text); VI.B, *Applicability of Certain PSD Requirements;* VI.B.1 through VI.B.4; VI.B.7; VI.C, *Notice to the U.S. EPA;* VI.D, *Major Stationary Sources in attainment areas affecting nonattainment areas;*

(*7*) Section VII, *Negligibly Reactive Volatile Organic Compounds (NRVOCs);*

(*8*) Section VIII, *Area Classifications*, Sections VIII.A; VIII.C; VIII.D;

(*9*) Section IX, *Redesignation;*

(*10*) Section X, *Air Quality Limitations*, Sections X.A, *Ambient Air Increments;*

X.A.1, X.A.2; X.A.3; X.A.4, *Periodic Review;*

(*11*) Section XI, *Exclusions From Increment Consumption;*

(*12*) Section XII, *Innovative Control Technology;*

(*13*) Section XIII, *Federal Class I Areas;* adopted April 16, 2004 and effective June 30, 2004.

(B) Regulation 3, *Stationary Source Permitting and Air Pollutant Emission Notice Requirements*, Part D, *Concerning Major Stationary Source New Source Review and Prevention of Significant Deterioration*, Section II, *Definitions;* Sections II.A; II.A.22.a; II.A.24.d; II.A.38.c; II.A.42.a; adopted August 17, 2006 and effective October 30, 2006.

(121) On August 8, 2006, the State of Colorado submitted revisions to Colorado's 5 CCR 1001–3, Regulation 1, that allows for the use of obscurants during military exercises at the Fort Carson Military Base and Pinón Canyon Maneuver Site in Colorado while precautionary steps are taken during the exercise to maintain air quality. The State modified the equipment requirements and work practices (abatement and control measures) in Regulation 1 intended to control the emissions of particulates, smokes and SO_2 from new and existing stationary sources. Consistent with its use of the term elsewhere, the State added the attainment/maintenance nomenclature. The revision also provides a new numbering scheme for each section of the regulation.

The State adopted EPA test method 9 (part 60 of this title, Appendix A–4) as it is applied to Standards of Performance for Steel Plants (§ 60.275a of this title). The State revised manufacturing process emission rates, to clarify that the applicability of the section is to process equipment with a design rate of 30 tons per hour or less. The averaging time for emission standards of all existing sources of SO_2 shall be a three hour rolling average. New sources of SO_2 not specifically regulated within Regulation 1 are limited to two tons per day and are subject to BACT.

(i) Incorporation by reference.

(A) 5 CCR 1001–3, Regulation 1, Emission Control for Particulate Matter, Smoke, Carbon Monoxide, and Sulfur Oxides, Section I., *Applicability: Referenced Federal Regulations;* Section II., *Smoke and Opacity;* Section III., *Particulate Matter* (except Subsection III.A.1.d.); Section IV., *Continuous Emission Monitoring Requirements for New or Existing Sources;* Section V., *Emission Standards for Existing Iron and Steel Plant Operations;* Section VI., *Sulfur Dioxide Emission Regulations;* Section VII., *Emission Regulations for Certain Electric Generating Stations Owned and Operated by the Public Service Company of Colorado;* Section VIII., *Restrictions On The Use of Oil as a Backup Fuel;* effective October 2, 2005.

(122) The State of Colorado submitted revisions October 25, 2005 to Colorado's 5 CCR 1001–5 Regulation Number 3, Part A and Colorado's 5 CCR 1001–5 Regulation Number 3, Part D. The October 25, 2005 submittal included language changes and renumbering of Regulation Number 3. The incorporation by reference in ((i)(A) and (i)(B) reflects the renumbered sections and language changes as of the October 25, 2005 submittal.

(i) Incorporation by reference.

(A) 5 CCR 1001–5, Regulation 3, *Stationary Source Permitting and Air Contaminant Emission Notice Requirements*, Part A, *Concerning General Provisions Applicable to Reporting and Permitting*, adopted April 16, 2004 and effective June 30, 2004:

Section I, *Applicability*, Sections I.B, *Definitions;* I.B.7, *Allowable Emissions;* I.B.13, *Continuous Emissions Monitoring System (CEMS);* I.B.14, *Continuous Emissions Rate Monitoring Systems (CERMS);* I.B.15, *Continuous Parameter Monitoring System (CPMS);* I.B.33, *Pollution Prevention;* I.B.35, *Potential to Emit;* I.B.36, *Predictive Emissions Monitoring System (PEMS);* adopted April 16, 2004 and effective June 30, 2004.

(B) 5 CCR 1001–5, Regulation 3, *Stationary Source Permitting and Air Contaminant Emission Notice Requirements*, Part D, *Concerning Major Stationary Source New Source Review and Prevention of Significant Deterioration*, adopted April 16, 2004 and effective June 30, 2004:

(*1*) Section I, *Applicability*,

(*i*) I.A., *General Applicability;* I.A.2; I.A.3;

(*ii*) I.B, *Applicability Tests;* I.B.1; I.B.2; I.B.4 (except the final sentence beginning, ''For example''); I.B.5;

(*iii*) I.C;

(*2*) Section II, *Definitions,*

(*i*) II.A;

(*ii*) II.A; II.A.1, *Actual Emissions;* II.A.1.a (only the language that appears as plain or italicized text); II.A.1.c (only the language that appears as plain text); II.A.1.d;

(*iii*) II.A.2, *Actuals PAL;*

(*iv*) II.A.4, *Baseline Actual Emissions;*

(*v*) II.A.7, *Begin Actual Construction;*

(*vi*) II.A.9, *Clean Coal Technology;*

(*vii*) II.A.10, *Clean Coal Technology Demonstration Project;*

(*viii*) II.A.13, *Construction;*

(*ix*) II.A.14, *Emissions Unit;*

(*x*) II.A.15, *Electric Utility Steam Generating Unit;*

(*xi*) II.A.17, *High Terrain;*

(*xii*) II.A.18, *Hydrocarbon Combustion Flare;*

(*xiii*) II.A.20, *Low Terrain;*

(*xiv*) II.A.21, *Lowest Achievable Emission Rate (LAER);* II.A.21.b (only the language that appears as plain or italicized text);

(*xv*) II.A.22, *Major Emissions Unit;*

(*xvi*) II.A.23, *Major Modification* (only the language that appears as plain and italicized text); II.A.23.d.(iii); II.A.23.d(x); II.A.23.d(xi); II.A.23.e;

(*xvii*) II.A.25, *Major Stationary Source;* II.A.25.b (only the language that appears as plain or italicized text);

(*xviii*) II.A.27, *Net Emissions Increase;* II.A.27.a.(i) (only the language that appears as plain or italicized text); II.A.27.a.(ii); II.A.27.b; II.A.27.g.(iii) (only the language that appears as plain or italicized text); II.A.27.i;

(*xix*) II.A.28, *Nonattainment Major New Source Review (NSR) Program;*

(*xx*) II.A.29, *PAL Effective Date;*

(*xxi*) II.A.30, *PAL Effective Period;*

(*xxii*) II.A.31, *PAL Major Modification;*

(*xxiii*) II.A.32, *PAL Permit;*

(*xxiv*) II.A.33, *PAL Pollutant;*

(*xxv*) II.A.34, *Plantwide Applicability Limitation (PAL);*

(*xxvi*) II.A.36, *Prevention of Significant Deterioration (PSD) Permit;*

(*xxvii*) II.A.37, *Project;*

(*xxviii*) II.A.38, *Projected Actual Emissions;*

(*xxvix*) II.A.39, *Reactivation of Very Clean Coal-fired Electric Utility Steam Generating Unit;*

(*xxx*) II.A.41, *Replacement Unit;*

(*xxxi*) II.A.42, *Repowering;*

(*xxxii*) II.A.43, *Secondary Emissions;*

(*xxxiii*) II.A.46, *Significant Emissions Unit;*

(*xxxiv*) II.A.47, *Small Emissions Unit;*

(*xxxv*) II.A.48, *Temporary Clean Coal Technology Demonstration Project;*

(*3*) Section V, *Requirements Applicable to Nonattainment Areas,* V.A.7.c (except for the phrases, ''a Clean Unit or at'', ''a reasonable possibility that'', and ''may result in a significant emissions increase''); V.A.7.d;

(*4*) Section VI, *Requirements applicable to attainment and unclassifiable areas and pollutants implemented under section 110 of the Federal Act (Prevention of Significant Deterioration Program),* Sections VI.A.1.c (only the language that appears as plain or italicized text); VI.B.5 (except for the phrases, ''a Clean Unit or at'', ''a reasonable possibility that'', and ''may result in a significant emissions increase''); VI.B.6;

(*5*) Section XVII, *Actuals PALs;* adopted April 16, 2004 and effective June 30, 2004.

(123) Colorado adopted revisions to its procedural rules on January 16, 1998 and submitted part of the revised procedural rules to EPA on November 5, 1999. Colorado's procedural rules govern all procedures and hearings before the Air Quality Control Commission (Commission) and certain procedures and hearings before the Air Pollution Control Division within the Colorado Department of Public Health and Environment. The revision to the Commission's procedural rules was intended to bring the Commission current with all applicable procedural requirements for their official actions. The submitted portion of the revision consisted of changes to Section 1.11.0 of the procedural rules. The section addresses requirements under section 128 of the CAA regarding the composition of the Commission and disclosure by its members of potential conflicts of interest.

(i) Incorporation by reference.

(A) Department of Public Health and Environment, Air Quality Control Commission, Procedural Rules, 5 CCR 1001–1, Section 1.11.0, *State Implementation Plan,* adopted on January 16, 1998 and effective on March 30, 1998.

(ii) [Reserved]

(124) On May 25, 2011 the State of Colorado submitted revisions to its State Implementation Plan to address the requirements of EPA's regional haze rule. On December 31, 2012, EPA issued a final rule approving this submittal and responding to public comments. On May 26, 2015 EPA reissued the final rule with respect to the nitrogen oxides (NO_X) best available retrofit technology (BART) determination for the Comanche Generating Station to provide additional responses to public comments.

(i) Incorporation by reference.

(A) Colorado Air Quality Control Commission, Regulation Number 3, 5 CCR 1001–5, *Stationary Source Permitting and Air Pollutant Emission Notice Requirements*, Part F, *Regional Haze Limits—Best Available Retrofit Technology (BART) and Reasonable Progress (RP)*, Section VI, *Regional Haze Determinations*, and Section VII, *Monitoring, Recordkeeping, and Reporting for Regional Haze Limits;* adopted January 7, 2011; effective February 14, 2011.

(B) Colorado Air Quality Control Commission, Regulation Number 7, 5 CCR 1001–9, *Control of Ozone via Ozone Precursors (Emissions of Volatile Organic Compounds and Nitrogen Oxides)*, Section XVII, *(State Only, except Section XVII.E.3.a. which was submitted as part of the Regional Haze SIP) Statewide Controls for Oil and Gas Operations and Natural Gas-Fired Reciprocating Internal Combustion Engines*, subsection E.3.a, *(Regional Haze SIP) Rich Burn Reciprocating Internal Combustion Engines;* adopted January 7, 2011; effective February 14, 2011.

(125) On August 21, 2006, the State of Colorado submitted revisions to 5 CCR 1001–5, Regulation Number 3, *Air Pollution Emission Notice and Permitting Requirements*. The August 21, 2006, submittal included renumbering and deletions of Regulation Number 3. The incorporation by reference in paragraphs (c)(125)(i)(A) and (B) of this section reflect the renumbered sections, deletions and reference changes as of the August 21, 2006, submittal.

(i) Incorporation by reference

(A) 5 CCR 1001–5, Regulation Number 3, *Stationary Source Permitting and Air Contaminant Emission Notice Requirements*, Part C, *Concerning Operating Permits*, Section I, *Applicability*, I.A., *Definitions;* I.A.7.j., adopted December 15, 2005 and effective March 2, 2006.

(B) 5 CCR 1001–5, Regulation Number 3, *Stationary Source Permitting and Air Contaminant Emission Notice Requirements*, Part D, *Concerning Major Stationary Source New Source Review and Prevention of Significant Deterioration*, adopted December 15, 2005 and effective March 2, 2006:

(*1*) Section I, *Applicability*, I.A., *General Applicability;* I.A.2., I.B., *Applicability Tests;* I.B.3., I.B.4.

(*2*) Section II, *Definitions;* II.A.; II.A.1., *Actual Emissions;* II.A.1.d.; II.A.11., *Complete;* II.A.12., *Construction;* II.A.13., *Emissions Unit;* II.A.14., *Electric Utility Steam Generating Unit;* II.A.15., *Federal Land Manager (FLM);* II.A.16., *High Terrain;* II.A.17., *Hydrocarbon combustion flare;* II.A.18., *Innovative Control Technology;* II.A.19., *Low Terrain;* II.A.20., *Lowest Achievable Emission Rates (LAER)* (excluding underlined text); II.A.21., *Major Emissions Unit;* II.A.22., *Major Modification* (excluding II.A.22.a. and underlined text); II.A.23., *Major Source Baseline Date;* II.A.24., *Major Stationary Source* (excluding II.A.24.d. and underlined text); II.A.25., *Minor Source Baseline Date;* II.A.26., *Net Emissions Increase* (excluding underlined text); II.A.27., *Nonattainment Major New Source Review (NSR) Program;* II.A.28., *PAL Effective Date;* II.A.29., *PAL Effective Period;* II.A.30., *PAL Major Modification;* II.A.31., *PAL Permit;* II.A.32., *PAL Pollutant;* II.A.33., *Plantwide Applicability Limitation (PAL);* II.A.34., *Prevention of Significant Deterioration (PSD) Permit;* II.A.35., *Project;* II.A.36., *Projected Actual Emissions;* II.A.37., *Reactivation of Very Clean Coal-fired Electric Utility Steam Generating Unit;* II.A.38., *Regulated NSR Pollutant* (excluding II.A.38.c.); II.A.39., *Replacement Unit;* II.A.40., *Repowering* (excluding underlined text); II.A.41., *Secondary Emissions;* II.A.42., *Significant* (excluding II.A.42.a.) ; II.A.43., *Significant Emissions Increase;* II.A.44., *Significant Emissions Unit;* II.A.45., *Small Emissions Unit;* II.A.46., *Temporary Clean Coal Technology Demonstration Project;* XV., *Actual PALs*.

(ii) Additional material.

(A) Notice of Final Adoption, dated 12/15/2005, signed by Douglas A.

Lempke, Administrator, for revisions made to Regulation Number 3, *Air Pollution Emission Notice and Permitting Requirements*.

(126) On May 11, 2012 and May 13, 2013 the State of Colorado submitted revisions to the State Implementation Plan that incorporate the required elements of the 2008 $PM_{2.5}$ NSR Implementation Rule and the 2010 $PM_{2.5}$ Increment Rule.

(i) Incorporation by reference

(A) 5 CCR 1001–5, Regulation Number 3, *Stationary Source Permitting and Air Pollutant Emission Notice Requirements*, Part D, *Concerning Major Stationary Source New Source Review and Prevention of Significant Deterioration*, Section II, *Definitions*, Section II.A.5, *Baseline Area*, II.A.5.a. and II.A.5.b.; Section II.A.23., *Major Source Baseline Date*, II.A.23.a. and II.A.23.b.; II.A.25., *Minor Source Baseline Date*, II.A.25.a., II.A.25.b. introductory text, and II.A.25.b.(i); II.A.38, *Regulated NSR Pollutant*, II.A.38.c., II.A.38.g.; II.A.42., *Significant*, II.A.42.a.; Section X, *Air Quality Limitations*, X.A., *Ambient Air Increments*, X.A.1., effective on 12/15/11.

(B) 5 CCR 1001–5, Regulation Number 3, *Stationary Source Permitting and Air Pollutant Emission Notice Requirements*, Part D, *Concerning Major Stationary Source New Source Review and Prevention of Significant Deterioration*, Section II, *Definitions*, II.A.23., *Major Source Baseline Date*, II.A.23.c., effective on 2/15/13.

(127) On June 11, 2008, June 18, 2009, and May 25, 2011 the State of Colorado submitted revisions to 5 CCR 1001–5, Regulation 3, Parts A, B, and D. The June 11, 2008 and June 18, 2009 submittals incorporated changes to fee amounts which the State charges for the processing and annual renewal of air emission permits. These fees support Colorado's construction and operating permit programs. EPA is approving fees submitted by the State on June 18, 2009, which superseded changes submitted on June 11, 2008, to the extent that the fees support the construction permit program. EPA is also approving revisions made to 5 CCR 1001–5, Regulation 3, Parts A, B, and D submitted by the State on May 25, 2011 for Parts A, B and D.

(i) Incorporation by reference.

(A) 5 CCR 1001–5, Regulation Number 3, *Stationary Source Permitting and Air Pollutant Emission Notice Requirements*, Part A, *Concerning General Provisions Applicable to Reporting and Permitting*, VI. *Fees*, VI.D. *Fee Schedule*, VI.D.1.; adopted September 18, 2008 and effective October 30, 2008.

(B) 5 CCR 1001–5, Regulation Number 3, *Stationary Source Permitting and Air Pollutant Emission Notice Requirements*, Part A, *Concerning General Provisions Applicable to Reporting and Permitting*, except Section II., *Air Pollutant Emission Notice (APEN) Requirements*, II.D., *Exemptions from Air Pollutant Emission Notice Requirements*, Section II.D.1.sss, II.D.1.ttt, II.D.1.xxx, and II.D.1.ffff; and Section VI., *Fees*, VI.D., *Fee Schedule*, VI.D.1., adopted February 21, 2008 and effective April 30, 2008.

(C) 5 CCR 1001–5, Regulation Number 3, *Stationary Source Permitting and Air Pollutant Emission Notice Requirements*, Part B, *Concerning Construction Permits;* adopted February 21, 2008 and effective April 30, 2008.

(D) 5 CCR 1001–5, Regulation Number 3, *Stationary Source Permitting and Air Pollutant Emission Notice Requirements*, Part D, *Concerning Major Stationary Source New Source Review and Prevention of Significant Deterioration;* adopted February 21, 2008 and effective April 30, 2008:

(*1*) Excluding underlined text in Section II, *Definitions*, Section II.A.1., *Actual Emissions*, II.A.1.a., II.A.1.c., and II.A.1.e.; II.A.8., *Best Available Control Technology (BACT)*, first paragraph; II.A.20., *Lowest Achievable Emissions Rate (LAER)*, II.A.20.b.; II.A.22., *Major Modification*, introductory paragraph; II.A.24., *Major Stationary Source*, II.A.24.b.; II.A.26., *Net Emissions Increase*, II.A.26.a.(i) and II.A.26.g.(iii); II.A.40.5, *Representative Actual Annual Emissions*, introductory paragraph and II.A.40.5(a); and, VI. *Requirements applicable to attainment and unclassifiable areas and pollutants implemented under Section 110 of the Federal Act (Prevention of Significant Deterioration Program)*, VI.A. *Major Stationary Sources and Major Modifications*, VI.A.1., *Control Technology Review*, VI.A.1.c.; and

(*2*) With the following exceptions: Section II, *Definitions*, Section II.A.5., *Baseline Area*, II.A.5.a. and II.A.5.b.;

Section II.A.23., *Major Source Baseline Date;* II.A.25., *Minor Source Baseline Date,* II.A.25.a., II.A.25.b., introductory text, and II.A.25.b(i); II.A.38, *Regulated NSR Pollutant*, II.A.38.c.; II.A.42., *Significant,* II.A.42.a.; Section X, *Air Quality Limitations*, X.A., *Ambient Air Increments*, X.A.1.

(128) On May 25, 2011, the State of Colorado submitted revisions to 5 CCR 1001–5, Regulation 3, *Stationary Source Permitting and Air Pollutant Emission Notice Requirements*, parts A, B, and D. The May 25, 2011 submittal addresses the permitting of sources of greenhouse gases (GHGs). The revisions to portions of parts A, B, and D incorporate the provisions of the Prevention of Significant Deterioration (PSD) and Title V Greenhouse Gas Tailoring Rule. The revisions establish thresholds for determining which new stationary sources and modifications to existing stationary sources become subject to Colorado's PSD permitting requirements for their GHG emissions. These revisions are consistent with federal requirements for PSD permitting.

(i) Incorporation by reference.

(A) 5 CCR 1001–5, Regulation Number 3, *Stationary Source Permitting and Air Pollutant Emission Notice Requirements*, Part A, *Concerning General Provisions Applicable to Reporting and Permitting*, I.B., *Definitions*, I.B.10, *Carbon Dioxide Equivalent (CO2e);* I.B.23., *Greenhouse Gas (GHG);* I.B.25., *Major Source*, I.B.25b; and I.B.44., *Subject to Regulation;* VI., *Fees*, VI.D., *Fee Schedule;* Part B, *Concerning Construction Permits*, II.A.4. and II.A.7; Part D, *Concerning Major Stationary Source New Source Review and Prevention of Significant Deterioration*, II., *Definitions*, II.A., introductory paragraph, II.A.8, *Best Available Control Technology (BACT);* II.A.22., *Major Modification;* II.A.24., *Major Stationary Source;* II.A.24.a., introductory paragraph, II.A.24.a.(ii); II.A.24.b.; II.A.38., *Regulated NSR Pollutant*, II.A.38.e. and II.A.38.f.; adopted October 21, 2010 and effective December 15, 2010.

[37 FR 10855, May 31, 1972. Redesignated and amended at 80 FR 58209, Sept. 28, 2015]

EDITORIAL NOTE: For FEDERAL REGISTER citations affecting § 52.354, see the List of CFR Sections Affected, which appears in the Finding Aids section of the printed volume and at *www.fdsys.gov*.

Subpart H—Connecticut

§ 52.369 [Reserved]

§ 52.370 Identification of plan.

(a) Title of plan: ''State of Connecticut Air Implementation Plan.''

(b) The plan was officially submitted on March 3, 1972.

(c) The plan revisions listed below were submitted on the dates specified.

(1) Miscellaneous non-regulatory addition to the plan and addition of amendment to Chapter 360 of General Statutes which provides authority for delegation of enforcement authority submitted on March 21, 1972, by the Connecticut Department of Environmental Protection.

(2) Miscellaneous non-regulatory additions to the plan submitted on April 6, 1972, by the Connecticut Department of Environmental Protection.

(3) Attainment dates submitted on August 10, 1972, by the Connecticut Department of Environmental Protection.

(4) Regulation 19–508–100 requiring a review of indirect sources submitted on January 9, 1974, by the Connecticut Department of Environmental Protection.

(5) AQMA identification material submitted on April 15, 1974, by the Connecticut Department of Environmental Protection.

(6) Indirect Source Review Regulation 19–508–100 resubmitted on August 26, 1974, by the Connecticut Department of Environmental Protection.

(7) [Reserved]

(8) Revision to Chapter 8, Air Quality Surveillance, submitted on June 30, 1977, by the Governor.

(9) Revision to Indirect Source Review Regulation 19–508–100 submitted on June 13, 1977, by the Connecticut Department of Environmental Protection.

(10) A revision to Regulation 19–508–19(a)(2)(i) submitted by the Commissioner of the Connecticut Department of Environmental Protection on April 16, 1979, granting a variance until April 1, 1981, to Northeast Utilities.

(11) State Implementation Plan revisions to meet the requirements of part D of the Clean Air Act, as amended in 1977, were submitted on June 22, 1979,

and received on June 27, 1979; submitted on December 18, 1979 and received on December 28, 1979; submitted on January 28, 1980, and received on February 1, 1980; submitted and received on May 1, 1980; submitted and received on June 5, 1980; submitted on September 2, 1980, and received on September 8, 1980; and submitted and received on November 12, 1980. Included are plans to attain: The primary TSP standard in Greenwich and Waterbury and the carbon monoxide and ozone standards statewide. A program was also submitted for the review of construction and operation of new and modified major stationary sources of pollution in non-attainment areas. Certain miscellaneous provisions are also included.

(12) A revision to Regulation 19–508–19(a)(2)(i), submitted by the Commissioner of the Connecticut Department of Environmental Protection on September 8, 1980, granting a variance until March 27, 1983, to the Federal Paperboard Company, Inc.

(13) A comprehensive air quality monitoring plan, intended to meet requirements of 40 CFR part 58, was submitted by the Connecticut Department of Environmental Protection Commission on June 9, 1980, and November 17, 1980.

(14) Non-regulatory additions to the plan which were submitted on December 19, 1980, and amended on March 11, 1981, by the Connecticut Department of Environmental Protection amending the sulfur control strategy to include an ''Air Pollution Control/Energy Trade Option'' except for submittal attachments #1 and #2, ''Sulfur Dioxide'' and ''Transport of Sulfur Dioxide'' and the section of attachment #3 ''Control of Sulfur Oxides'' entitled ''Sample Analysis of a Btu Bubble Application''.

(15) Non-regulatory addition to the plan of the state *New Source Ambient Impact Analysis Guideline*, for use in State program actions, submitted on December 19, 1980, and amended on March 11, 1981, and July 15, 1981.

(16) Revisions to regulation 19–508–4 (source monitoring requirements) and regulation 19–508–5 (stack emissions testing) submitted on November 7, 1977, by the Commissioner of the Connecticut Department of Environmental Protection.

(17) A revision to Regulation 19–508–19(a)(2)(i), submitted by the Commissioner of the Connecticut Department of Environmental Protection on June 23, 1981, granting a temporary variance to Uniroyal Chemical, Division of Uniroyal, Inc.

(18) Revisions to Regulation 19–508–19 (Control of Sulfur Compound Emissions), Regulation 19–508–24 (Connecticut Primary and Secondary Standards), and accompanying narrative submitted by the Commissioner of the Connecticut Department of Environmental Protection on October 23, 1981, and November 4, 1981.

(19) Revisions submitted by the Commissioner of the Connecticut Department of Environmental Protection on November 16, 1981. These provisions supersede portions of the revisions identified under paragraph (c)(18).

(20) Revisions to meet the requirements of part D and certain other sections of the Clean Air Act, as amended, were submitted on December 15, 1980, May 29, 1981, and May 5, 1982. Included are changes to the State Ozone Control Plan involving adoption of Regulation 19–508–20(k) controlling the use of cutback asphalt, the approval of the RFP demonstration for ozone attainment, a refined inventory of miscellaneous stationary sources of Volatile Organic Compounds, changes to Regulation 19–508–3(1) dealing with review of new and modified stationary sources, and an amendment to the State's Smoke and Opacity monitoring requirements.

(21) [Reserved]

(22) Revisions to the narrative and State Regulation 19–508–18, subparts (d), f(1), f(2), and part of f(3), governing total suspended particulate emissions, submitted by the Commissioner of the Connecticut Department of Environmental Protection on April 8, 1982.

(23) Regulation 19–508–20(cc), Alternative Emission Reductions as it applies to Regulation 19–508–20: (m), can coating; (n), coil coating; (o), fabric and vinyl coating; (p), metal furniture coating; (q), paper coating; (r), wire coating; (s), miscellaneous metal parts; (t), manufacture of synthesized pharmaceutical products and (v), graphic arts—rotogravure and flexography, was

submitted on December 15, 1980, and January 11, 1982, by the Commissioner of the Department of Environmental Protection.

(24) Revision for Sikorsky Aircraft Division of United Technologies received from the Commissioner of the Connecticut Department of Environmental Protection on June 2 and July 16, 1982. This provision supersedes a portion of the revisions identified under (c)(18).

(25) Revisions to meet ozone attainment requirements of Part D (Group II CTG regulations), the adoption of a lead standard and the revision of the ozone standard, submitted on December 15, 1980, are approved as follows: Regulations 19–508–20 (s), (t), (v), (w), (aa), (bb), and (dd), Regulation 19–508–8 and Regulation 19–508–24(i)(l).

(26) Revision for Dow Chemical U.S.A. in Gale's Ferry submitted by the Commissioner of the Connecticut Department of Environmental Protection on December 20, 1982, including state order 7002B signed on May 27, 1982. This provision supersedes a portion of the revisions identified under paragraph (c)(18).

(27) Revision for Lydall and Foulds Division of Lydall, Inc., submitted by the Commissioner of the Connecticut Department of Environmental Protection on December 17, 1982, and January 5, 1983, allowing the facility to burn higher sulfur oil under the State Energy Trade Program.

(28) Revision for Simkins Industries, Inc., in New Haven submitted by the Commissioner of the Connecticut Department of Environmental Protection on January 19, 1983, allowing the facility to burn higher sulfur oil under the Sulfur Energy Trade Program.

(29) Attainment plan revisions to meet the requirements of Part D for ozone were submitted by the Department of Environmental Protection on December 10, 1982, and May 19, 1983. These revisions control volatile organic compound (VOC) emissions from solvent metal cleaners through emission limitations contained in Regulation 19–508–20(*1*) and supporting narrative committing the DEP to implement an educational program for automobile repair facilities. Approval of these revisions allowed EPA to rescind the moratorium on construction and modification of major sources of VOCs which had been in effect since October 1982.

(30) Revision for Loomis Institute in Windsor, submitted by the Commissioner of the Connecticut Department of Environmental Protection on March 30 and July 13, 1983, allowing the facility to burn 2.0 percent sulfur oil under the Sulfur Energy Trade Program.

(31) Revisions demonstrating the attainment and maintenance of the lead standard were submitted on October 18, 1983.

(32) Attainment plan revisions to meet the requirements of part D for ozone and carbon monoxide were submitted by the Department of Environmental Protection on December 10, 1982, January 7, 1983, January 21, 1983, May 19, 1983, June 15, 1983, September 19, 1983, and December 15, 1983. The revisions control volatile organic compound (VOC) and carbon monoxide emissions through a mix of stationary and mobile source controls. EPA approval includes the following regulatory provisions:

(i) Regulation 22a–174–20(ee) limiting emissions from major nonCTG source categories, and

(ii) Regulations 22a–174–27 and 14–164c describing the requirements for Connecticut's motor vehicle Inspection and Maintenance Program.

(33) Revision to Regulation 19–508–20(cc), ''Alternative Emission Reductions'' [made part of the SIP under paragraph (c)(23) of this section] to add Regulation 19–508–20(ee) to the list of VOC regulations that may be met by bubbling under Connecticut's generic rule after source-specific RACT determinations have been made part of the SIP. Revisions requiring sources subject to Regulation 19–508–20(ee) to comply with 19–508–20 (aa), (bb), and (dd). These revisions were submitted by the Connecticut Department of Environmental Protection on September 20, 1983.

(34) Revisions to the Ozone Attainment Plan were submitted by the Commissioner of the Connecticut Department of Environmental Protection on April 22, 1985.

(i) *Incorporation by reference.* (A) Amendments to Regulation 22a–174–1,

Definitions; Regulation 22a–174–20(a), Storage of Volatile Organic Compounds; Regulation 22a–174–20(b), Loading of Gasoline and Other Volatile Organic Compounds; and Regulation 22a–174–20(k), Restrictions on Cutback Asphalt, effective December 17, 1984.

(ii) *Additional material.* (A) *Source Test Guidelines and Procedures.*

(B) *Workshop Manual for Gasoline Tank Truck Certification.*

(C) Appendix B of *Control of Volatile Organic Compound Leaks from Gasoline Tank Trucks and Vapor Collection Systems* (EPA–450/2–78–051).

(35) Revisions to the State Implementation Plan were submitted December 15, 1980, and May 16, 1985, by the Commissioner of the Department of Environmental Protection.

(i) *Incorporation by reference.* (A) Amendments to Department of Environmental Protection Regulation 19–508–24(a)(4), ''Acceptable Method'' adopted by the State on October 8, 1980.

(ii) *Additional material.* (A) A letter dated May 16, 1985, certifying that an ''Acceptable Method'' shall be interpreted to mean that any monitoring method used to collect ambient air pollution data used for attainment status evaluation or designation must be approved by EPA.

(36) Revision to the State Implementation Plan submitted on April 18, 1986, by the Commissioner of the Department of Environmental Protection.

(i) *Incorporated by reference.* (A) State Order No. 943 for Connecticut Charcoal Co., effective April 18, 1986, establishing and requiring reasonably available control technology for the control of volatile organic compounds from this facility.

(37) Revisions to the State Implementation Plan submitted by the Connecticut Department of Environmental Protection on April 18, 1986, and February 3, 1987.

(i) *Incorporation by reference.* (A) State Order No. 944 for King Industries, Inc. dated April 18, 1986, which establishes and requires reasonably available control technology for the control of volatile organic compounds from this facility.

(B) A letter from the Connecticut Department of Environmental Protection dated February 3, 1987, which states that the effective date of State Order No. 944 is May 28, 1986.

(38) Revisions to the State Implementation Plan were submitted by the Connecticut Department of Environmental Protection (DEP) on April 14, 1987.

(i) *Incorporation by reference.* (A) Letter dated April 14, 1987, from the Connecticut Department of Environmental Protection submitting revisions to the State Implementation Plan for EPA approval.

(B) Letter dated April 1, 1987, from the Secretary of State of Connecticut to EPA.

(C) Section 22a–174–20(x) of Connecticut's Regulations for the Abatement of Air Pollution titled, ''Control of Volatile Organic Compound Leaks from Synthetic Organic Chemical & Polymer Manufacturing Equipment,'' effective April 1, 1987.

(D) Section 22a–174–20(y) of Connecticut's Regulations for the Abatement of Air Pollution titled, ''Manufacture of Polystyrene Resins,'' effective April 1, 1987.

(E) Amendments to subsection 22a–174–20(bb) of Connecticut's Regulations for the Abatement of Air Pollution titled, ''Compliance Methods,'' effective April 1, 1987.

(ii) *Additional material.* (A) Letter from the Connecticut DEP dated July 3, 1986, committing the Connecticut DEP to use only EPA approved test methods when requiring the testing of sources emitting volatile organic compound emissions.

(B) Letter from the Connecticut DEP dated May 29, 1987, certifying that there are no polypropylene or high-density polyethylene manufacturers in the State of Connecticut.

(39) Revisions to the State Implementation Plan submitted by the Connecticut Department of Environmental Protection on August 24, 1987.

(i) *Incorporation by reference.* (A) Letter from the Connecticut Department of Environmental Protection dated August 24, 1987, submitting a revision to the Connecticut State Implementation Plan.

(B) State Order No. 8007 for Belding Corticelli Thread Company dated July 13, 1987.

(40) [Reserved]

(41) Revision to the Connecticut State Implementation Plan submitted by the Commissioner of the Department of Environmental Protection on February 3, 1987.

(i) *Incorporation by reference.* (A) A letter from the Connecticut Department of Environmental Protection dated February 3, 1987, which states that the effective date of State Order No. 943, approved previously, for Connecticut Charcoal Co. is May 28, 1986.

(42) Revisions to the State Implementation Plan submitted by the Connecticut Department of Environmental Protection on October 27, 1987.

(i) *Incorporation by reference.* (A) Letter from the Connecticut Department of Environmental Protection dated October 27, 1987, submitting a revision to the Connecticut State Implementation Plan.

(B) State Order No. 8013 and attached Compliance Timetable for Raymark Industries, Incorporated in Stratford, Connecticut effective on September 24, 1987.

(ii) *Additional material.* (A) Technical Support Document prepared by the Connecticut Department of Environmental Protection providing a complete description of the reasonably available control technology determination imposed on the facility.

(43) Revisions to the State Implementation Plan submitted by the Connecticut Department of Environmental Protection on February 5, 1988.

(i) *Incorporation by reference.* (A) Letter from the Connecticut Department of Environmental Protection dated February 5, 1988, submitting a revision to the Connecticut State Implementation Plan.

(B) State Order No. 8012 and attached Compliance Timetable, Appendix A (allowable limits on small, uncontrolled vents), and Appendix B (fugitive leak detection program) for American Cyanamid Company in Wallingford, Connecticut. State Order No. 8012 was effective on January 6, 1988.

(ii) *Additional material.* (A) Technical Support Document prepared by the Connecticut Department of Environmental Protection providing a complete description of the reasonably available control technology determination imposed on the facility.

(44) Revisions to the State Implementation Plan submitted by the Connecticut Department of Environmental Protection on August 31, 1987.

(i) *Incorporation by reference.* (A) Letter from the Connecticut Department of Environmental Protection dated August 31, 1987, submitting a revision to the Connecticut State Implementation Plan.

(B) State Order No. 8008 and attached Compliance Timetable and Appendix A (allowable limits by product classification) for Spongex International, Ltd. in Shelton, Connecticut. State Order No. 8008 was effective on August 21, 1987.

(ii) *Additional materials.* (A) Technical Support Document prepared by the Connecticut Department of Environmental Protection providing a complete description of the reasonably available control technology determination imposed on the facility.

(45) [Reserved]

(46) Revisions to the State Implementation Plan submitted by the Connecticut Department of Environmental Protection on July 26, 1988.

(i) *Incorporation by reference.* (A) Letter from the Connecticut Department of Environmental Protection dated July 26, 1988, submitting a revision to the Connecticut State Implementation Plan.

(B) State Order No. 8023 and attached Compliance Timetable for New Departure Hyatt, Division of General Motors Corporation in Bristol, Connecticut. State Order No. 8023 was effective on July 8, 1988.

(ii) *Additional material.* (A) Technical Support Document prepared by the Connecticut Department of Environmental Protection providing a complete description of the reasonably available control technology determination imposed on the facility.

(47) Revisions to the State Implementation Plan submitted by the Connecticut Department of Environmental Protection on November 5, 1987.

(i) *Incorporation by reference.* (A) Letter from the Connecticut Department of Environmental Protection dated November 5, 1987, submitting a revision to the Connecticut State Implementation Plan.

(B) State Order No. 8001 and attached Compliance Timetable for Frismar, Incorporated in Clinton, Connecticut. State Order No. 8001 was effective on October 20, 1987.

(ii) *Additional material.* (A) Technical Support Document prepared by the Connecticut Department of Environmental Protection providing a complete description of the alternative reasonably available control technology determination imposed on the facility.

(48) Revisions to the State Implementation Plan submitted by the Connecticut Department of Environmental Protection on December 5, 1988.

(i) *Incorporation by reference.* (A) Letter from the Connecticut Department of Environmental Protection dated December 5, 1988, submitting a revision to the Connecticut State Implementation Plan.

(B) State Order No. 8011 and attached Compliance Timetable and Appendix A (allowable limits by product classification) for Dow Chemical, U.S.A. in Gales Ferry, Connecticut. State Order No. 8011 was effective on October 27, 1988.

(C) State Order No. 8011, which was approved in paragraph (c)(48)(i)(B), is removed without replacement; see paragraph (c)(115)(i)(C).

(ii) *Additional material.* (A) Technical Support Document prepared by the Connecticut Department of Environmental Protection providing a complete description of the reasonable available control technology determination imposed on the facility.

(49) Revisions to the State Implementation Plan submitted by the Connecticut Department of Environmental Protection on January 11, 1989.

(i) *Incorporation by reference.* (A) Letter from the Connecticut Department of Environmental Protection dated January 11, 1989, submitting a revision to the Connecticut State Implementation Plan.

(B) State Order No. 8010 and attached Compliance Timetable for Stanadyne, Incorporated in Windsor, Connecticut. State Order No. 8018 was effective on January 3, 1989.

(ii) *Additional material.* (A) Technical Support Document prepared by the Connecticut Department of Environmental Protection providing a complete description of the reasonably available control technology determination imposed on the facility.

(50) Revisions to federally approved section 22a-174-20(a) of the Regulations of Connecticut State Agencies, submitted on January 27, 1989, by the Department of Environmental Protection, limiting the volatility of gasoline from May 1 through September 15, beginning 1989 and continuing every year thereafter, including any waivers to such limitations that Connecticut may grant. In 1989, the control period will begin on June 30.

(51) Revisions to the State Implementation Plan submitted by the Connecticut Department of Environmental Protection (DEP) on April 7, 1989.

(i) *Incorporation by reference.* (A) Letter from the Connecticut DEP dated April 7, 1989, submitting a revision to the Connecticut State Implementation Plan.

(B) State Order No. 8014 and attached Compliance Timetable for Pratt & Whitney Division of United Technologies Corporation in East Hartford, Connecticut. State Order No. 8014 was effective on March 22, 1989.

(C) State Order No. 8027 and attached Compliance Timetable for Pratt & Whitney Division of United Technologies Corporation in North Haven, Connecticut. State Order No. 8027 was effective on March 31, 1989.

(D) State Order No. 8014, which was approved in paragraph (c)(51)(i)(B), is removed without replacement; see paragraph (c)(115)(i)(D).

(ii) *Additional material.* (A) Technical Support Document prepared by the Connecticut DEP providing a complete description of the reasonably available control technology determination imposed on Pratt and Whitney's East Hartford facility.

(B) Technical Support Document prepared by the Connecticut DEP providing a complete description of the reasonably available control technology determination imposed on Pratt and Whitney's North Haven facility.

(52) Revisions to the State Implementation Plan submitted by the Connecticut Department of Environmental Protection on February 7 and August 30, 1989.

(i) *Incorporation by reference.* (A) Letter from the Connecticut Department

of Environmental Protection dated February 7, 1989, submitting a revision to the Connecticut State Implementation Plan.

(B) State Order No. 8021 and attached Compliance Timetable, and Appendix A (allowable limits on small, uncontrolled vents and allowable outlet gas temperatures for surface condensers) for Pfizer, Incorporated in Groton, Connecticut. State Order No. 8021, Compliance Timetable and Appendix A were effective on December 2, 1988.

(C) Letter from the Connecticut Department of Environmental Protection dated August 30, 1989, and reorganized Appendix C (fugitive leak detection program) and Appendix D (operation and maintenance program for pollution abatement equipment) to State Order No. 8021. Appendices C and D were effective on December 2, 1988.

(D) State Order No. 8021, which was approved in paragraph (c)(52)(i)(B), and appendices C and D to State Order No. 8021, which were approved in paragraph (c)(52)(C), are removed without replacement; see paragraph (c)(115)(i)(E).

(ii) *Additional material.* (A) Technical Support Document prepared by the Connecticut Department of Environmental Protection providing a complete description of the reasonably available control technology determination imposed on the facility.

(53) Revisions to the State Implementation Plan submitted by the Connecticut Department of Environmental Protection on September 8, 1989.

(i) *Incorporation by reference.* (A) Letter from the Connecticut Department of Environmental Protection dated September 8, 1989, submitting a revision to the Connecticut State Implementation Plan.

(B) State Order No. 8009 and attached Compliance Timetable, Appendix A, Appendix B, and Appendix C for Uniroyal Chemical Company, Inc. in Naugatuck, Connecticut. State Order No. 8009 was effective on September 5, 1989.

(C) State Order No. 8009, which was approved in paragraph (c)(53)(i)(B), is removed without replacement; see paragraph (c)(115)(i)(F).

(ii) *Additional material.* (A) Technical Support Document prepared by the Connecticut Department of Environmental Protection providing a complete description of the reasonably available control technology determination imposed on the facility.

(54) Revisions to the State Implementation Plan submitted by the Connecticut Department of Environmental Protection on December 22, 1989.

(i) *Incorporation by reference.* (A) Letter from the Connecticut Department of Environmental Protection dated December 22, 1989, submitting a revision to the Connecticut State Implementation Plan.

(B) State Order No. 8029, attached Compliance Timetable, and Tables A through I for Hamilton Standard Division of United Technologies Corporation in Windsor Locks, Connecticut. State Order No. 8029 was effective on November 29, 1989.

(ii) *Additional material.* (A) Technical Support Document prepared by the Connecticut DEP providing a complete description of the reasonably available control technology determination imposed on Hamilton Standard.

(55) Revision to the State Implementation Plan submitted by the Connecticut Department of Environmental Protection on January 10, 1990.

(i) *Incorporation by reference.* (A) Letter from the Connecticut Department of Environmental Protection dated January 10, 1990, submitting a revision to the Connecticut State Implementation Plan.

(B) State Order No. 8032 and attached Compliance Timetable for the Heminway & Bartlett Manufacturing Company in Watertown, Connecticut. State Order No. 8032 was effective on November 29, 1989.

(C) State Order No. 8032, which was approved in paragraph (c)(55)(i)(B), is removed without replacement; see paragraph (c)(115)(i)(G).

(ii) *Additional material.* (A) Technical Support Document prepared by the Connecticut DEP providing a complete description of the reasonably available control technology determination imposed on The Heminway & Bartlett Manufacturing Company.

(56) Revisions of the State Implementation Plan submitted by the Connecticut Department of Environmental Protection on January 19, 1989, July 28,

1989, and January 26, 1990 (with attached letter of November 28, 1989).

(i) *Incorporation by reference.* (A) Letters from the Connecticut Department of Environmental Protection dated January 19, 1989, July 28, 1989, and January 26, 1990, (with attached letter of November 28, 1989) submitting revisions to the Connecticut State Implementation Plan.

(B) Section 22a–174–1 of the Regulations of the Connecticut State Agencies Concerning Abatement of Air Pollution entitled ''Definitions,'' effective in the State of Connecticut on October 3, 1989.

(C) Subsection 22a–174–3(k) of the Regulations of the Connecticut State Agencies Concerning Abatement of Air Pollution entitled ''Requirements for the Prevention of Significant Deterioration (PSD) Program,'' effective in the State of Connecticut on October 3, 1989.

(D) Section 22a–174–2, subsections 22a–174–3(a) through (j) and (l), subsection 22a–174–8(c), subsection 22a–174–20(ee), and subsection 22a–174–4(d) of the Regulations of the Connecticut State Agencies Concerning Abatement of Air Pollution entitled ''Permits to Construct and Permits to Operate Stationary Sources or Modifications,'' effective in the State of Connecticut on February 1, 1989.

(E) Connecticut's Ambient Impact Analysis Guideline dated July 1989 as revised by letter on January 26, 1990.

(ii) *Additional materials.* (A) State Implementation Plan narrative entitled ''New Source Review.''

(B) Letter from the Connecticut Department of Environmental Protection regarding implementation of BACT.

(C) Nonregulatory portions of the State Submittal.

(57) [Reserved]

(58) Revisions to the State Implementation Plan submitted by the Connecticut Department of Environmental Protection on November 9, 1989, and September 12, 1991.

(i) *Incorporation by reference.* (A) Letters from the Connecticut Department of Environmental Protection dated November 9, 1989, and September 12, 1991, submitting revisions to the Connecticut State Implementation Plan.

(B) Section 22a–174–20 of the Regulations of the Connecticut Department of Environmental Protection Concerning Abatement of Air Pollution, effective October 31, 1989, except for the last sentence of 22a–174–20(aa)(7).

(59) Revisions to the State Implementation Plan submitted by the Connecticut Department of Environmental Protection on March 24 and April 23, 1992.

(i) *Incorporation by reference.* (A) Letter from the Connecticut Department of Environmental Protection dated April 14, 1992, submitting a revision to the Connecticut State Implementation Plan.

(B) State Order No. 1073B and attached compliance timetable for the Stone Connecticut Paperboard Corporation of Uncasville, CT. State Order No. 1073B was effective on February 14, 1992.

(C) Letter from the Connecticut Department of Environmental Protection dated March 24, 1992, submitting a revision to the Connecticut State Implementation Plan.

(D) State Order No. 7016A and attached compliance timetable for the Hartford Hospital of Hartford, CT. State Order No. 7016A was effective on February 5, 1992.

(ii) *Additional materials.* (A) Memorandum dated August 17, 1989, approving the modeling analysis for the Stone Container Co.

(B) Modeling Study dated August 9, 1989, for the Stone Container Co.

(C) State Order No 1073A, dated June 12, 1990, and effective July 9, 1990.

(D) Memorandum dated January 3, 1990, approving the modeling analysis for the Hartford Hospital.

(E) Modeling study dated December 28, 1989, for the Hartford Hospital.

(60) Revisions to the State Implementation Plan submitted by the Connecticut Department of Environmental Protection on February 16, 1996.

(i) *Incorporation by reference.* (A) Letter from the Connecticut Department of Environmental Protection dated February 16, 1996, submitting a revision to the Connecticut State Implementation Plan.

(B) State Order No. 8010 dated October 25, 1989 for Sikorsky Aircraft Corporation, effective on January 29, 1990,

as well as Addendum A and Addendum B to Order No. 8010, effective on February 7, 1996 and September 29, 1995, respectively. The State order and two addenda define and impose RACT on certain VOC emissions at Sikorsky Aircraft Corporation in Stratford, Connecticut

(C) State Order No. 8010, which was approved in paragraph (c)(60)(i)(B), is removed without replacement; see paragraph (c)(115)(i)(H).

(61) Revisions to the State Implemetation Plan submitted by the Connecticut Department of Environmental Protection on February 28, 1991.

(i) *Incorporation by reference.* (A) Letter from the Connecticut Department of Environmental Protection dated February 28, 1991, submitting a revision to the Connecticut State Implementation Plan.

(B) State Order No. 7017 and attached compliance timetable for the Connecticut Light and Power Company of Montville, Connecticut. State Order No. 7017 was effective on February 25, 1991.

(ii) *Additional materials.* (A) Memorandum dated September 14, 1990, approving the modeling analysis for Connecticut Light and Power.

(B) Letter dated April 23, 1991, confirming that the revised configuration approved by State Order No. 7017 will not lead to violations.

(C) Modeling Study dated January 26, 1990, for Connecticut Light and Power.

(62) Revisions to the State Implementation Plan submitted by the Connecticut Department of Environmental Protection on January 12, 1993.

(i) *Incorporation by reference.* (A) Letter from the Connecticut Department of Environmental Protection, dated January 12, 1993, submitting a revision to the Connecticut State Implementation Plan.

(B) Section 22a–174–30 of the Connecticut Regulations for the Abatement of Air Pollution, entitled ''Dispensing of Gasoline/Stage II Vapor Recovery,'' dated November 1992.

(C) Letter from the Connecticut Secretary of State's office indicating that the regulation entitled ''Dispensing of Gasoline/Stage II Vapor Recovery'' became effective on November 24, 1992.

(ii) *Additional materials.* (A) Nonregulatory portions of the submittal.

(B) Connecticut Department of Environmental Protection document entitled ''Narrative of SIP Revision: Stage II Vapor Recovery,'' dated January 1993.

(63) Revisions to the State Implementation Plan submitted by the Connecticut Department of Environmental Protection on March 11, 1993.

(i) *Incorporation by reference.* (A) Letter from the Connecticut Department of Environmental Protection dated March 11, 1993, submitting a revision to the Connecticut State Implementation Plan.

(B) Connecticut State Order No 7019 dated March 11, 1993, and effective in the State of Connecticut on February 19, 1993.

(ii) *Additional materials.* (A) Air Quality Modeling Analysis to Demonstrate SO_2 CAAQS/NAAQS Compliance at the Hamilton Standard Division of United Technologies Corporation Windsor Locks CT; June 1991.

(64) [Reserved]

(65) Revisions to the State Implementation Plan establishing a Small Business Stationary Source Technical and Environmental Compliance Assistance Program were submitted by the Connecticut Department of Environmental Protection on January 12 and August 9, 1993.

(i) *Incorporation by reference.* (A) Letter from the Connecticut Department of Environmental Protection dated January 12, 1993, submitting a revision to the Connecticut State Implementation Plan.

(B) Revisions to the State Implementation Plan for the Small Business Stationary Source Technical and Environmental Compliance Assistance Program dated January 1993 and effective on January 12, 1993.

(C) Letter from the Connecticut Department of Environmental Protection dated August 9, 1993, clarifying and updating the January 12, 1993, submittal.

(ii) *Additional materials.* (A) Letter from the Connecticut Department of Environmental Protection dated April 6, 1994, clarifying the January 12, 1993, submittal.

(B) Other non-regulatory portions of the State's submittal.

(66) Revisions to the State Implementation Plan submitted by the Connecticut Department of Environmental Protection on January 12, 1993.

(i) *Incorporation by reference.* (A) Letter from the Connecticut Department of Environmental Protection dated January 12, 1993 submitting a revision to the Connecticut State Implementation Plan.

(B) Section 22a–174–4(c)(1) of Connecticut Regulations for the Abatement of Air Pollution, under the section entitled ''Recordkeeping and Reporting.'' Section 22a–174–4(c)(1) was previously numbered as 19–508–4(c)(1) in Connecticut's SIP. 19–508–4(c)(1) in Connecticut's SIP. 19–508–4 became effective in the State of Connecticut on October 31, 1977. Connecticut developed an emission statement program using the existing regulatory authority given by section 22a–174–4(c)(1) under the section entitled ''Reporting and Recordkeeping''.

(ii) *Additional information.* (A) State implementation Plan narrative entitled ''Revision to State Implementation Plan for Air Quality Emission Statements'' which addresses emission statement requirements not discussed specifically in Section 22a–174–4(c)(1).

(B) Nonregulatory portions of the submittal.

(67) [Reserved]

(68) Revisions to the State Implementation Plan submitted by the Connecticut Department of Environmental Protection on March 24, 1994, May 20, 1994, and March 4, 1994.

(i) *Incorporation by reference.* (A) Letter from the Connecticut Department of Environmental Protection dated March 24, 1994 submitting a revision to the Connecticut State Implementation Plan.

(B) Letter from the Connecticut Department of Environmental Protection dated May 20, 1994 submitting a supplemental revision to the Connecticut State Implementation Plan.

(C) State Order No. 8073: State of Connecticut vs. City of New Haven (effective September 24, 1993) and attached plan titled ''Remedial Action Plan for Prevention of Airborne Particulate Matter and Fugitive Discharge of Visible Emissions in the Alabama Street/East Shore Parkway Area of New Haven.''

(D) State Order No. 8074: State of Connecticut vs. Waterfront Enterprises, Inc. (effective November 5, 1993) and attached plan titled ''Proposed Operation Plan in Response to Unilateral Order (September 20, 1993).''

(E) State Order No. 8075: State of Connecticut vs. Laydon Construction, (effective September 21, 1993) and attached plan titled ''Plan for Control of Fugitive Emissions of PM10 (September 21, 1993).''

(F) State Order No. 8076: State of Connecticut vs. United Illuminating Company (effective December 2, 1993) and attached plan titled ''Remediation Plan for Fugitive Emissions: Alabama Street and Connecticut Avenue, New Haven, Connecticut (November 19, 1993).''

(G) State Order No. 8076c: State of Connecticut vs. M. J. Metals, Inc. (effective June 18, 1993).

(H) State Order No. 8078: State of Connecticut vs. New Haven Terminal, Inc. (effective November 15, 1993) and attached plan titled ''Fugitive Dust Control Plan (Revised January 19, 1994).''

(I) State Order No. 8079: State of Connecticut vs. Yankee Gas Services Company (effective September 24, 1993) and attached plan titled ''Revised Compliance Plan for Consent Order No. 8079 (August 31, 1993).''

(J) Letter from the Connecticut Department of Environmental Protection dated March 4, 1994 (received March 16, 1995) submitting two amendments to the Regulations of Connecticut State Agencies concerning abatement of air pollution: amended Sections 22a–174–24(f) and –24(g) ''Connecticut primary and secondary ambient air quality standards for particulate matter'' and amended Sections 22a–174–6(a) and –6(b) '' 'Air Pollution' emergency episode procedures'' (both effective July 7, 1993).

(K) Amended Regulations of Connecticut State Agencies: amended Sections 22a–174–24(f) and –24(g) ''Connecticut primary and secondary ambient air quality standards for particulate matter'' and amended Sections 22a–174–6(a) and –6(b) '' 'Air Pollution'

emergency episode procedures'' (both effective July 7, 1993).

(ii) *Additional materials.* (A) An attainment plan and demonstration which outlines Connecticut's control strategy and for attainment and maintenance of the PM10 NAAQS, implements and meets RACM and RACT requirements, and provides contingency measures for New Haven.

(B) Nonregulatory portions of the submittal.

(69) Connecticut submitted the Oxygenated Gasoline Program and revisions on January 11, 1993, January 12, 1993, January 14, 1993, and August 1, 1995. This submittal satisfied the requirements of section 211(m) of the Clean Air Act, as amended.

(i) *Incorporation by reference.* (A) Letters dated January 11, 1993 and January 12, 1993 which included the oxygenated gasoline program, Regulations of Connecticut State Agencies (RCSA) Section 22a–174–28, with an effective date of November 2, 1992.

(B) A letter dated January 14, 1993 requesting that the RCSA Section 22a–174–28, as submitted on January 11, 1993 and January 12, 1993, be adopted as part of Connecticut's SIP.

(C) A letter dated August 1, 1995, requesting that a revision to RCSA Section 22a–174–28(a), with an effective date of July 26, 1995, be approved and adopted as part of Connecticut's SIP.

(ii) *Additional materials.* (A) The Technical Support Document for the Redesignation of the Hartford Area as Attainment for Carbon Monoxide submitted on September 30, 1994.

(B) Nonregulatory portions of submittals.

(70) Revision to the State Implementation Plan submitted by the Connecticut Department of Environmental Protection on January 13, 1995.

(i) *Incorporation by reference.* (A) Letter from the Connecticut Department of Environmental Protection dated January 13, 1995 submitting a revision to the Connecticut State Implementation Plan.

(B) Amended Regulation of Connecticut State Agencies: amended Subsection 22a–174–3(k) ''Abatement of air pollution—New Source Review'' (effective December 2, 1994).

(ii) *Additional materials.* (A) Nonregulatory portions of the submittal.

(71) Revisions to the Connecticut State Implementation Plan (SIP) for carbon monoxide concerning the control of carbon monoxide from mobile sources, dated January 12, 1993, January 14, 1993, April 7, 1994, and August 1, 1995 submitted by the Connecticut Department of Environmental Protection (CT DEP).

(i) *Incorporation by reference.* (A) Letter dated August 1, 1995 which included the amendments and revisions to the Regulation of Connecticut State Agencies (RCSA), Section 22a-174–28(a) regarding the definition for the Southwestern Control Area and that portion of the definition of ''control period'' that applies to the Southwestern Control Area with an effective date of July 26, 1995.

(ii) *Additional materials.* (A) January 12, 1993 and April 7, 1994, VMT forecasts beginning with the year 1993 and including all subsequent years up to the year of attainment (1995).

(B) January 12, 1993 and April 7, 1994, Carbon Monoxide Attainment Demonstration and Contingency Measures.

(72) Revisions to the State Implementation Plan submitted by the Connecticut Department of Environmental Protection on: May 18, 1995; August 21, 1995; January 17, 1996; January 30, 1996; January 30, 1996; January 30, 1996; January 30, 1996; June 17, 1996; June 20, 1996; June 24, 1996; July 9, 1996; July 11, 1996; February 18, 1997; March 20, 1997; March 24, 1997; March 24, 1997; March 24, 1997; March 24, 1997; March 24, 1997; April 22, 1997; April 22, 1997; May 19, 1997; May 19, 1997; and May 20, 1997.

(i) *Incorporation by reference.* (A) Twenty-four letters from the Connecticut Department of Environmental Protection dated: May 18, 1995; August 21, 1995; January 17, 1996; June 24, 1996; January 30, 1996; January 30, 1996; January 30, 1996; January 30, 1996; June 20, 1996; June 17, 1996; July 11, 1996; July 9, 1996; March 24, 1997; May 19, 1997; March 24, 1997; March 20, 1997; March 24, 1997; February 18, 1997; May 19, 1997; March 24, 1997; March 24, 1997; May 20, 1997; April 22, 1997; and April 22, 1997; submitting revisions to the Connecticut State Implementation Plan.

(B) Connecticut Trading Agreement and Order no. 8092 issued to United Illuminating Company's Station #3 in Bridgeport, effective on May 18, 1995.

(C) Connecticut Trading Agreement and No. 8095 issued to American Ref-Fuel Company of Southeastern Connecticut in Preston, effective on June 2, 1995.

(D) Connecticut Trading Agreement and Order no. 8093 issued to Pfizer, Inc., in Groton, effective on July 19, 1995.

(E) Connecticut Trading Agreement and Order no. 8096 issued to Food Ingredients Company in New Milford, effective on August 25, 1995.

(F) Connecticut Trading Agreement and Order no. 8106 issued to Connecticut Light and Power Company in Middletown, effective on October 10, 1995.

(G) Connecticut Trading Agreement and Order no. 8107 issued to Northeast Nuclear Energy Company in Waterford, effective on October 13, 1995.

(H) Connecticut Trading Agreement and Order no. 8105 issued to Electric Boat Division of General Dynamics in Groton, effective on October 31, 1995.

(I) Connecticut Trading Agreement and Order no. 8100 issued to Bridgeport RESCO Company in Bridgeport, effective on November 2, 1995.

(J) Connecticut Trading Agreement and Order no. 8102 issued to United Illuminating's auxiliary boiler in New Haven, effective on December 15, 1995.

(K) Connecticut Trading Agreement and Order no. 8103 issued to United Illuminating Company's Station #4 in New Haven, effective on February 14, 1996.

(L) Connecticut Trading Agreement and Order no. 8119 issued to the City of Norwich, Department of Public Utilities, effective on March 4, 1996.

(M) Connecticut Trading Agreement and Order no. 8118 issued to South Norwalk Electric Works, South Norwalk, effective on March 19, 1996.

(N) Connecticut Trading Agreement and Order no. 8101 issued to the State of Connecticut Department of Mental Health and Addiction Services, effective on July 16, 1996.

(O) Connecticut Trading Agreement and Order no. 8110 issued to Yale University, effective on July 29, 1996.

(P) Connecticut Trading Agreement and Order no. 8132 issued to Bridgeport Hospital, effective on September 10, 1996.

(Q) Connecticut Trading Agreement and Order no. 1494 issued to Connecticut Light and Power, involving Branford, Cos Cob, Devon, Franklin Drive, Montville, Middletown, South Meadow, Torrington, Tunnel Road, and Norwalk Harbor Stations, effective on October 15, 1996.

(R) Connecticut Trading Agreement and Order no. 8130 issued to the State of Connecticut Department of Public Works, effective on October 18, 1996.

(S) Connecticut Trading Agreement and Order no. 8115 issued to the University of Connecticut in Storrs, effective on November 19, 1996.

(T) Connecticut Trading Agreement and Order no. 8113 issued to Simkins Industries, effective on November 19, 1996.

(U) Connecticut Trading Agreement and Order no. 8135 issued to Bridgeport Hydraulic Company, effective on December 24, 1996.

(V) Connecticut Trading Agreement and Order no. 8141 issued to the Town of Wallingford Department of Public Utilities, effective on December 27, 1996.

(W) Regulations 22a–174–22 ''Control of Nitrogen Oxides Emissions,'' adopted on January 23, 1997, which establishes reasonably available control technology requirements for major stationary sources of nitrogen oxides.

(X) Connecticut Trading Agreement and Order no. 8123 issued to the Algonquin Gas Transmission Company, effective on April 18, 1997.

(Y) Connecticut Trading Agreement and Order no. 8116 issued to the Connecticut Resource Recovery Authority, effective on April 22, 1997.

(ii) *Additional materials.* (A) Letter, dated June 18, 1996, from Carmine DiBattista, Chief of the Bureau of Air Management for the Connecticut DEP, to Susan Studlien, Deputy Director of the Office of Ecosystem Protection at U.S. EPA, Region I.

(B) SIP narrative materials, dated May 1995, submitted with Connecticut Trading Agreement and Order no. 8092 for United Illuminating Company's Station #3 in New Haven.

(C) SIP narrative materials, dated August 3, 1995, submitted with Connecticut Trading Agreement and Order no. 8095 for American Ref-Fuel Company of Southeastern Connecticut in Preston.

(D) SIP narrative materials, dated December 1995, submitted with Connecticut Trading Agreement and Order no. 8093 issued to Pfizer, Inc., in Groton.

(E) SIP narrative materials, dated November 1995, submitted with Connecticut Trading Agreement and Order no. 8096 issued to Food Ingredients Company in New Milford.

(F) SIP narrative materials, dated November 1995, submitted with Connecticut Trading Agreement and Order no. 8106 issued to Connecticut Light and Power Company in Middletown.

(G) SIP narrative materials, dated November 1995, submitted with Connecticut Trading Agreement and Order no. 8107 issued to Northeast Nuclear Energy Company in Waterford.

(H) SIP narrative materials, dated October 6, 1995, submitted with Connecticut Trading Agreement and Order no. 8105 issued to Electric Boat Division of General Dynamics in Groton.

(I) SIP narrative materials, dated September 29, 1995, submitted with Connecticut Trading Agreement and Order no. 8100 issued to Bridgeport RESCO Company in Bridgeport.

(J) SIP narrative materials, dated December 1995, submitted with Connecticut Trading Agreement and Order no. 8102 issued to United Illuminating's auxiliary boiler in New Haven.

(K) SIP narrative materials, dated March 1996, submitted with Connecticut Trading Agreement and Order no. 8103 issued to United Illuminating Company's Station #4 in Bridgeport.

(L) SIP narrative materials, dated May 31, 1995, submitted with Connecticut Trading Agreement and Order no. 8119 issued to the City of Norwich, Department of Public Utilities.

(M) SIP narrative materials, dated May 31, 1995, submitted with Connecticut Trading Agreement and Order no. 8118 issued to South Norwalk Electric Works, South Norwalk.

(N) SIP narrative materials, dated March 1997, submitted with Connecticut Trading Agreement and Order no. 8101 issued to the State of Connecticut Department of Mental Health and Addiction Services.

(O) SIP narrative materials, dated May 1997, submitted with Connecticut Trading Agreement and Order no. 8110 issued to Yale University.

(P) SIP narrative materials, dated March 1997, submitted with Connecticut Trading Agreement and Order no. 8132 issued to Bridgeport Hospital.

(Q) SIP narrative materials, dated March 1997, submitted with Connecticut Trading Agreement and Order no. 1494 issued to Connecticut Light and Power, involving Branford, Cos Cob, Devon, Franklin Drive, Montville, Middletown, South Meadow, Torrington, Tunnel Road, and Norwalk Harbor Stations.

(R) SIP narrative materials, dated March 1997, submitted with Connecticut Trading Agreement and Order no. 8130 issued to the State of Connecticut Department of Public Works.

(S) SIP narrative materials, dated February 1996, submitted with Connecticut Trading Agreement and Order no. 8115 issued to the University of Connecticut in Storrs.

(T) SIP narrative materials, dated May 1997, submitted with Connecticut Trading Agreement and Order no. 8113 issued to Simkins Industries.

(U) SIP narrative materials, dated March 1997, submitted with Connecticut Trading Agreement and Order no. 8135 issued to Bridgeport Hydraulic Company.

(V) SIP narrative materials, dated March 1997, submitted with Connecticut Trading Agreement and Order no. 8141 issued to the Town of Wallingford Department of Public Utilities.

(W) SIP narrative materials, dated April 1997, submitted with Connecticut Trading Agreement and Order no. 8123 issued to the Algonquin Gas Transmission Company.

(X) SIP narrative materials, dated April 1997, submitted with Connecticut Trading Agreement and Order no. 8116 issued to the Connecticut Resource Recovery Authority.

(73) Revisions to the State Implementation Plan submitted by the Connecticut Department of Environmental Protection on June 3, 1996.

(i) *Incorporation by reference.* (A) Letter from the Connecticut Department of Environmental Protection dated June 3, 1996, submitting a revision to the Connecticut State Implementation Plan.

(B) State Order No. 8036, dated May 6, 1996, for Risdon Corporation, effective on that date. The State order define and impose alternative RACT on certain VOC emissions at Risdon Corporation in Danbury, Connecticut.

(74) A revision to the Connecticut SIP regarding ozone monitoring. Connecticut will modify its SLAMS and its NAMS monitoring systems to include a PAMS network design and establish monitoring sites. Connecticut's SIP revision satisfies 40 CFR 58.20(f) PAMS requirements.

(i) *Incorporation by reference.* (A) PAMS SIP Commitment Narrative, which incorporates PAMS into the ambient air quality monitoring network of State or Local Air Monitoring Stations (SLAMS) and National Air Monitoring Stations (NAMS).

(ii) *Additional material.* (A) Letter from the Connecticut Department of Environmental Protection dated March 2, 1995 submitting a revision to the Connecticut State Implementation Plan.

(75) Revisions to the State Implementation Plan submitted by the Connecticut Department of Environmental Protection on January 5, 1994.

(i) *Incorporation by reference.* (A) Letter from the Connecticut Department of Environmental Protection dated January 5, 1994 submitting a revision to the Connecticut State Implementation Plan.

(B) Regulations sections 22a–174–20(s), ''Miscellaneous Metal Parts and Products,'' sections 22a–174–20(v), ''Graphic Arts Rotogravures and Flexography,'' sections 22a–174–20(ee), ''Reasonably Available Control Technology for Large Sources,'' adopted and effective on November 18, 1993, which establish reasonably available control technology requirements for major stationary sources of volatile organic compounds.

(76) Revision to the State Implementation Plan submitted by the Connecticut Department of Environmental Protection on January 5, 1994.

(i) *Incorporation by reference.* (A) Letter from the Connecticut Department of Environmental Protection dated January 5, 1994 submitting a revision to the Connecticut State Implementation Plan.

(B) Regulation section 22a–174–32, ''Reasonably Available Control Technology for Volatile Organic Compounds,'' adopted and effective on November 18, 1993, which establishes reasonably available control technology requirements for major stationary sources of volatile organic compounds.

(ii) *Additional materials.* (A) Letter from Connecticut dated June 27, 1994 clarifying language in section 22a–174–32(A).

(77) Revisions to the State Implementation Plan submitted by the Connecticut Department of Environmental Protection on December 30, 1994, and May 8, 1998. This revision is for the purpose of satisfying the rate-of-progress requirement of section 182(b) and the contingency measure requirements of sections 172(c)(9) and 182(c)(9) of the Clean Air Act, for the Greater Hartford serious ozone nonattainment area, and the Connecticut portion of the NY–NJ–CT severe ozone nonattainment area.

(i) *Incorporation by reference.* (A) Letter from the Connecticut Department of Environmental Protection dated December 30, 1994, submitting a revision to the Connecticut State Implementation Plan.

(B) Letter from the Connecticut Department of Environmental Protection dated May 8, 1998, submitting a revision to the Connecticut State Implementation Plan.

(78) Revision to the State Implementation Plan submitted by the Connecticut Department of Environmental Protection on June 24, 1998.

(i) *Incorporation by reference.* (A) State of Connecticut Regulation of Department of Environmental Protection Section 22a–174–27, Emission Standards for Periodic Motor Vehicle Inspection and Maintenance as revised on March 26, 1998.

(B) State of Connecticut Regulation of Department of Motor Vehicles Concerning Periodic Motor Vehicle Emissions Inspection and Maintenance Section 14–164c as revised on April 7, 1998.

(ii) *Additional materials.* (A) Letter from the Connecticut Department of Environmental Protection dated June 24, 1998 submitting a revision to the Connecticut State Implementation Plan.

(B) Letter from Connecticut Department of Environmental Protection dated November 13, 1998, submitting a revision to the Connecticut State Implementation Plan.

(79) Revisions to the State Implementation Plan submitted by the Connecticut Department of Environmental Protection on February 7, 1996 and February 18, 1999.

(i) *Incorporation by reference.* (A) Connecticut regulation section 22a–174–36, entitled ''Low Emission Vehicles'' as dated and effective by determination of the Secretary of State on December 23, 1994.

(B) Connecticut regulation section 22a–174–36(g), entitled ''Alternative Means of Compliance via the National Low Emission Vehicle (LEV) Program'' as dated and effective by determination of the Secretary of State on January 29, 1999.

(ii) *Additional material.* (A) Letter from the Connecticut Department of Environmental Protection dated February 7, 1996 submitting a revision to the Connecticut State Implementation Plan for the Low Emission Vehicle program.

(B) Letter from the Connecticut Department of Environmental Protection dated February 18, 1999 submitting a revision to the Connecticut State Implementation Plan for the National Low Emission Vehicle program to be a compliance option under the State's Low Emission Vehicle Program.

(80) Revision to the State Implementation Plan submitted by the Connecticut Department of Environmental Protection on March 26, 1999.

(i) *Incorporation by reference.* (A) Letter from the Connecticut Department of Environmental Protection dated March 26, 1999, submitting a revision to the Connecticut State Implementation Plan.

(B) Regulation section 22a–174–22a, ''The Nitrogen Oxides (NO_X) Budget Program'' adopted on December 15, 1998, and effective on March 3, 1999. As of January 24, 2008, Section 22a–174–22a is superseded and shall have no prospective effect. Violations of Section 22a–174–22a that occur prior to January 24, 2008 shall continue to be subject to enforcement, including on or after January 24, 2008, in accordance with applicable law.

(ii) *Additional materials.* (A) Nonregulatory portions of the submittals.

(81) Revisions to the State Implementation Plan submitted by the Connecticut Department of Environmental Protection on May 12, 1994.

(i) *Incorporation by reference.* (A) ''Clean Fuel Fleet Substitute Plan,'' prepared by the Connecticut Department of Environmental Protection, dated May 12, 1994.

(ii) *Additional materials.* (A) Letter from the Connecticut Department of Environmental Protection dated May 12, 1994 submitting a revision to the Connecticut State Implementation Plan.

(82) Revisions to the State Implementation Plan submitted by the Connecticut Department of Environmental Protection on July 11, 1997, September 12, 1997, and December 8, 1997.

(i) *Incorporation by reference.* (A) Letters from the Connecticut Department of Environmental Protection dated July 11, 1997, September 12, 1997, and December 8, 1997, submitting revisions to the Connecticut State Implementation Plan.

(B) Trading Agreement and Order Number 8137 issued to AlliedSignal, Inc., and U.S. Army Tank-Automotive and Armaments Command in Stratford, effective on November 19, 1996.

(C) Trading Agreement and Order Number 8138 issued to Connecticut Natural Gas Corporation in Rocky Hill, effective on November 19, 1996.

(D) Trading Agreement and Order Number 8114 issued to Cytec Industries, Inc., in Wallingford, effective on December 20, 1996.

(E) Modification to Trading Agreement and Order Number 8138 issued to Connecticut Natural Gas Corporation effective June 25, 1997.

(F) Modification to Trading Agreement and Order Number 8137 issued to AlliedSignal, Inc., and U.S. Army Tank-Automotive and Armaments Command in Stratford, effective July 8, 1997.

(G) Trading Agreement and Order Number 8094 issued to Ogden Martin Systems of Bristol, Inc., in Bristol, effective on July 23, 1997.

(ii) *Additional materials.* (A) Nonregulatory portions of the submittals.

(B) Policy materials concerning the use of emission credits from New Jersey at Connecticut sources.

(83) Revisions to the State Implementation Plan submitted by the Connecticut Department of Environmental Protection on October 7, 1999 to discontinue the oxygenated gasoline program in the Connecticut portion of the New York—N. New Jersey—Long Island Area.

(i) *Incorporation by reference.* (A) CTDEP; ''Abatement of Air Pollution: Oxygenated Gasoline,''

State Regulation 22a–174–28.

(ii) *Additional materials.* (A) Letter from the Connecticut Department of Environmental Protection dated October 7, 1999 submitting a revision to the Connecticut State Implementation Plan.

(84) Revisions to the State Implementation Plan submitted by the Connecticut Department of Environmental Protection on April 15, 1997, April 20, 1998, and September 2, 1999.

(i) *Incorporation by reference.* (A) Section 22a–174–1(97) of the Regulation of the Connecticut State Agencies, definition of the term ''Volatile organic compound'' or ''VOC,'' effective in the State of Connecticut on December 22, 1997.

(B) Section 22a–174–20(b) of the Regulation of the Connecticut State Agencies, entitled ''Loading of gasoline and other volatile organic compounds,'' effective in the State of Connecticut on April 1, 1998.

(C) Section 22a–174–20(l) of the Regulation of the Connecticut State Agencies, entitled ''Metal cleaning,'' effective in the State of Connecticut on August 23, 1996.

(D) Section 22a–174–20(s) of the Regulation of the Connecticut State Agencies, ''Miscellaneous metal parts and products,'' effective in the State of Connecticut on March 1, 1995.

(E) Section 22a–174–32 of the Regulation of the Connecticut State Agencies, entitled ''Reasonably Available Control Technology (RACT) for volatile organic compounds,'' effective in the State of Connecticut on August 27, 1999.

(ii) *Additional materials.* (A) Letters from the Connecticut Department of Environmental Protection dated April 15, 1997, April 20, 1998, and September 2, 1999 submitting revisions to the Connecticut State Implementation Plan.

(85) [Reserved]

(86) Revisions to the State Implementation Plan submitted by the Connecticut Department of Environmental Protection on September 30, 1999.

(i) *Incorporation by reference.* (A) Regulations of Connecticut State Agencies, Section 22a–174–22b, State of Connecticut Regulation of Department of Environmental Protection Concerning The Post-2002 Nitrogen Oxides (NO_X) Budget Program, which became effective on September 29, 1999.

(ii) *Additional materials.* (A) Letter from Connecticut Department of Environmental Protection dated September 30, 1999 submitting Regulations of Connecticut State Agencies, Section 22a–174–22b and associated administrative materials as a revision to the Connecticut State Implementation Plan.

(B) The SIP narrative ''Connecticut State Implementation Plan Revision to Implement the NO_X SIP Call,'' dated September 30, 1999.

(C) Letter from Connecticut Department of Environmental Protection dated August 1, 2002.

(D) The SIP narrative ''Connecticut State Implementation Plan Revision to Revise the State's NO_X Emissions Budget,'' dated July 22, 2002.

(iii) Section 22a–174–22b, State of Connecticut Regulation of Department of Environmental Protection Concerning The Post-2002 Nitrogen Oxides (NO_X) Budget Program, is fully enforceable up to and including April 30, 2010. As of May 1, 2010, Section 22a–174–22b is superseded and shall have no prospective effect. Violations of Section 22a–174–22b that occur prior to May 1, 2010 shall be subject to enforcement, including on or after May 1, 2010, in accordance with applicable law.

(87) [Reserved]

(88) Revisions to the State Implementation Plan submitted by the Connecticut Department of Environmental Protection on May 19, 2000.

(i) *Incorporation by reference.* (A) Connecticut Trading Agreement and Order No. 8177 issued to Wisvest Bridgeport Harbor's Unit No. 3 in Bridgeport on May 31, 2000.

(B) Connecticut Trading Agreement and Order No. 8187 issued to Wisvest Bridgeport Harbor's Unit No. 2 on January 12, 2000.

(C) Connecticut Trading Agreement and Order No. 8094, Modification No. 2, issued to Ogden Martin Systems of Bristol, Inc. on May 22, 2000.

(D) Connecticut Trading Agreement and Order No. 8095, Modification No. 2, issued to American Ref-Fuel Company of Southeastern Connecticut in Preston on May 22, 2000.

(E) Connecticut Trading Agreement and Order No. 8100, Modification No. 2, issued to Bridgeport Resco Company, Limited Partnership in Bridgeport on May 22, 2000.

(F) Connecticut Trading Agreement and Order No. 8116, Modification No. 2, issued to the Connecticut Resources Recovery Authority in Hartford on May 22, 2000.

(G) Connecticut Trading Agreement and Order No. 8178 issued to Wisvest's New Haven Harbor's auxiliary boiler in New Haven on May 22, 2000.

(H) Connecticut Trading Agreement and Order No. 8179 issued to Wisvest's Bridgeport Harbor's Unit No. 4 on May 22, 2000.

(I) Connecticut Trading Agreement and Order No. 8176, issued to Wisvest's New Haven Harbor Station's Unit No. 1 in New Haven on May 31, 2000.

(ii) *Additional materials.* (A) Letter from the Connecticut Department of Environmental Protection dated May 19, 2000, submitting a revision to the Connecticut State Implementation Plan.

(B) SIP narrative materials, dated December 1999, submitted with Connecticut Trading Agreement and Order Nos. 8176, 8177, 8178, 8179, and 8187.

(89) Revisions to the State Implementation Plan submitted by the Connecticut Department of Environmental Protection on November 16, 1999.

(i) *Incorporation by reference.* (A) Subsection (b) of Section 14–164c-11a of the Regulations of Connecticut State Agencies Concerning Emissions Repairs Expenditure Requirement to Receive Waiver, adopted and effective June 24, 1999.

(ii) *Additional materials.* (A) Letter from Connecticut Department of Environmental Protection dated November 19, 1999 submitting a revision to the Connecticut State Implementation Plan.

(B) Narrative portion of the Revision to State Implementation Plan for Enhanced Motor Vehicle Inspection and Maintenance Program, dated October 7, 1999.

(90) Revisions to the State Implementation Plan submitted by the Connecticut Department of Environmental Protection on October 15, 2001, to incorporate the nitrogen oxide limits and related regulatory provisions of regulation 22a–174–38, Municipal Waste Combustors.

(i) *Incorporation by reference.* (A) The nitrogen oxide emission limits and related regulatory provisions of State of Connecticut Regulation of Department of Environmental Protection Section 22a–174–38, Municipal Waste Combustors effective October 26, 2000, included in sections 22a–174–38 (a), (b), (c), (d), (i), (j), (k), (l), and (m).

(B) Section 22a–174–38, subsections (a), (c), (d), (i), (j), (k), and (l) were revised as published in the Connecticut Law Journal, volume 78, no. 17, on October 25, 2016. Subsection (d) is removed from the SIP without replacement. See paragraph (116)(i)(A).

(ii) *Additional material.* (A) Letter from the Connecticut Department of Environmental Protection dated October 15, 2001, submitting a revision to the Connecticut State Implementation Plan.

(91) Revisions to the State Implementation Plan submitted by the Connecticut Department of Environmental Protection on June 14, 2002.

(i) *Incorporation by reference.* (A) Connecticut's amendments to Section 22a–174–1, *Definitions* except for the following sections: (4), (18), (20), (29), (44), (45), (60), (111), (112) and, (117). These regulations are effective in the state of Connecticut on March 15, 2002.

(B) Connecticut's new Section 22a–174–2a, *Procedural Requirements for New Source Review and Title V Permitting* except for the following sections: (a)(1)

through (6); (b)(1) through (4); introduction to (b)(5); (b)(5)(D), (F) and, the last sentence of (G); (b)(9); (c)(2); clause after first comma '' * * * or order pursuant to section 22a–174–33(d) of regulations of Connecticut State Agency * * * '' in the introduction to (c)(6); (c)(6)(B) and (C); clause after first comma '' * * * or order pursuant to section 22a–174–33(d) of Regulations of Connecticut State Agencies * * * '' in (c)(9); reference to ''Title V'' in title of (d); (d)(4)(A) through (D); (d)(7)(A) through (D); (d)(8)(A) and (B); reference to ''Title V'' in title of (e); (e)(2)(A) and (B); (e)(3)(D); (e)(5)(A) through (F); reference to ''Title V permit'' in (e)(6); reference to ''22a–174–33'' in first clause of introduction to (f)(2); (f)(2)(F); (f)(5); (f)(6); (g)(1) and (2); (h)(1) through (3) and; (i)(1) through (3). These regulations are effective in the state of Connecticut on March 15, 2002.

(C) Connecticut's new Section 22a–174–3a, *Permit to Construct and Operate Stationary Sources* except for the following sections: (a)(1)(C); (c)(1)(H); (d)(3)(J) and (M); references to ''Dioxin,'' ''PCDDs'' and, ''PCDFs'' in Table 3a(i)–1 of (i)(1) and; (m)(1) through (8). These regulations are effective in the state of Connecticut on March 15, 2002.

(ii) *Additional materials.* (A) Letter from the Connecticut Department of Environmental Protection dated June 14, 2002 submitting a revision to the Connecticut State Implementation Plan.

(92)–(94) [Reserved]

(95) Revisions to the State Implementation Plan submitted by the Connecticut Department of Environmental Protection on December 1, 2004 and April 4, 2006.

(i) *Incorporation by reference.* (A) Section 22a–174–30 of the Connecticut Regulations for the Abatement of Air Pollution, entitled ''Dispensing of Gasoline/Stage I and Stage II Vapor Recovery,'' effective in the State of Connecticut on May 10, 2004, with the exception of subsection (c)(5), which Connecticut did not submit as part of the SIP revision.

(B) Section 22a–174–3b of the Connecticut Regulations for the Abatement of Air Pollution, entitled ''Exemptions from Permitting for Construction and Operation of External Combustion Units, Automotive Refinishing Operations, Emergency Engines, Nonmettalic Mineral Processing Equipment and Surface Coating Operations,'' effective in the State of Connecticut on April 4, 2006, except for the following subsections which Connecticut did not submit as part of the SIP revision: (a)(1), (5), (6), (7), (10), (11), (12), (15), (17); (b)(1) for an external combustion unit, nonmetallic mineral processing equipment, an emergency engine or a surface coating operation; (b)(2) for an external combustion unit, nonmetallic mineral processing equipment, an emergency engine or a surface coating operation; (c) External combustion unit; (e) Emergency engine; (f) Nonmetallic mineral processing equipment; (g) Surface coating operation; and (h) Fuel sulfur content.

(C) [Reserved]

(D) Regulation 22a–174–30, which was approved in paragraph (c)(95)(i)(A), is removed and replaced by Regulation 22a–174–30a, see paragraph (c)(117)(i)(B).

(ii) *Additional materials.* (A) Pressure Vacuum Vent Cap Test Procedures

(B) Table 1 showing the emission reductions resulting from the measures Connecticut adopted to meet the shortfall identified in the Connecticut one-hour ozone attainment demonstration.

(C) Nonregulatory portions of the submittal.

(96) Revisions to the State Implementation Plan submitted by the Connecticut Department of Environmental Protection on April 30, 2002, and October 17, 2002.

(i) *Incorporation by reference.* (A) Consent Order No. 8229A issued by the Connecticut Department of Environmental Protection to Hitchcock Chair Company, Ltd., on April 15, 2002.

(B) Consent Order No. 8190 issued by the Connecticut Department of Environmental Protection to Kimberly Clark Corporation on April 23, 2002.

(C) Consent Order No. 8200 issued by the Connecticut Department of Environmental Protection to Watson Laboratories, Inc., on October 3, 2002.

(D) Consent Order No. 8237 issued by the Connecticut Department of Environmental Protection to Ross & Roberts, Inc., on October 4, 2002.

(E) State Order No. 8200, which was approved in paragraph (c)(96)(i)(C), is removed without replacement; see paragraph (c)(115)(i)(I).

(ii) *Additional materials.* (A) Nonregulatory portions of the submittal.

(97) Revisions to the State Implementation Plan submitted by the Connecticut Department of Environmental Protection on April 26, 2007 and September 12, 2007.

(i) *Incorporation by reference.* (A) Regulations of Connecticut State Agencies (RCSA) section 22a–174–22c entitled ''The Clean Air Interstate Rule (CAIR) Nitrogen Oxides (NO_X) Ozone Season Trading Program,'' effective in the State of Connecticut on September 4, 2007.

(B) Section 22a–174–22c, subsection (g)(3) is removed from the SIP without replacement effective December 22, 2016. See paragraph (116)(i)(B).

(98) Revisions to the State Implementation Plan submitted by the Connecticut Department of Environmental Protection on December 19, 2007.

(i) *Incorporation by reference.* (A)(*1*) Connecticut Department of Environmental Protection Regulations entitled ''Emission standards and on-board diagnostic II test requirements for periodic motor vehicle inspection and maintenance'' at section 22a–174–27 (effective in the State of Connecticut on August 25, 2004).

(*2*) In revisions to the State Implementation Plan submitted by the Connecticut Department of Environmental Protection on January 22, 2010 section 22a–174–27 (e) was repealed by the State of Connecticut effective August 10, 2009. Section 22a–174–27 (e), which was approved in paragraph (c)(98)(i)(A)(*1*), is removed from the SIP without replacement; see paragraph (c)(105)(i)(B) of this section.

(B) Connecticut Department of Motor Vehicles Regulation entitled ''Periodic Motor Vehicle Emissions Inspection and Maintenance'' at section 14–164c–1a to Section 14–164c–18a (effective in the State of Connecticut on May 28, 2004).

(99) Revisions to the State Implementation Plan submitted by the Connecticut Department of Environmental Protection on February 9, 2011.

(i) *Incorporation by reference.* (A) The additions of subsections (21) and (49) to Section 22a–174–1, effective January 28, 2011.

(B) The revisions to Sections 22a–174–3a(a)(1)(H) through (J), Sections 22a–174–3a(d)(3)(H), Sections 22a–174–3a(j)(1)(E) through (I), Sections 22a–174–3a(k)(1) through (k)(2), and Sections 22a–174–3a(k)(4), effective January 28, 2011.

(100) Revisions to the State Implementation Plan submitted by the Connecticut Department of Environmental Protection on February 1, 2008 and January 8, 2009.

(i) *Incorporation by reference.* (A) State of Connecticut Regulation, Section 22a–174–20(k), Restrictions on VOC Emissions from Cutback and Emulsified Asphalt (excluding the text that appears in brackets), effective in the state of Connecticut on January 1, 2009.

(B) A letter from Barbara Sladeck, RLS Assistant Coordinator, Office of the Secretary of the State, State of Connecticut, to Hon. Gina McCarthy, Commissioner, Department of Environmental Protection, dated July 26, 2007, stating that the effective date of the Amendment of Section 22a–174–20(l), Metal Cleaning, and Adoption of Section 22a–174–41, pertaining to Architectural and Industrial Maintenance Products, is July 26, 2007.

(C) State of Connecticut Regulation, Section 22a–174–20(l), Metal Cleaning, effective in the state of Connecticut on July 26, 2007, revisions to the following provisions (including the text that appears in underline and excluding the text that appears in brackets): Sections 22a–174–20(l)(1)(A) through (C) and(J) through (L), Sections 22–a–174–20(l)(3), (A) through (D), (F) through (H), and (J) through (L), Sections 22a–174–20(l)(5) introductory text, (B), (E), and (M), and Section 22a–174–20(l)(6); and addition of Sections 22a–174–20(l)(7) through (9).

(D) State of Connecticut Regulation, Section 22a–174–41, Architectural and Industrial Maintenance Products, effective in the state of Connecticut on July 26, 2007.

(101) Revisions to the State Implementation Plan submitted by the Connecticut Department of Environmental Protection on July 20, 2007, consisting

of orders establishing reasonably available control technology for volatile organic compound emissions for Sumitomo Bakelite North America, Cyro Industries, and Curtis Packaging.

(i) *Incorporation by reference.* (A) State of Connecticut vs. Sumitomo Bakelite North America, Inc., Consent Order No. 8245, issued as a final order on October 11, 2006.

(B) State of Connecticut and Cyro Industries, Consent Order No. 8268, issued as a final order on February 28, 2007.

(C) State of Connecticut vs. Curtis Packaging Corporation, Consent Order No. 8270, issued as a final order on May 1, 2007.

(102) Revisions to the State Implementation Plan submitted by the Connecticut Department of Environmental Protection on November 18, 2008, April 29, 2010, and November 21, 2012.

(i) *Incorporation by reference.* (A) Regulations of Connecticut State Agencies (RCSA) Section 22a–174–20, as published in the Connecticut Law Journal on May 18, 2010, effective April 6, 2010:

(*1*) The amendment of subdivision (f)(9);

(*2*) The withdrawal of subsection (g);

(*3*) The amendment of subdivisions (l)(1) and (l)(2);

(*4*) The amendment of subsections (p) Metal furniture coatings, (q) Paper, film, and foil coating;

(*5*) The amendment of subparagraph (s)(2)(B);

(*6*) The amendment of subsection (ee) Reasonably available control technology for large sources;

(*7*) The addition of subsection (ff) Flexible package printing, with the exception of the phrases ''or other method approved by the commissioner'' in subparagraph (ff)(1)(K) and ''or alternative method as approved by the commissioner'' in clause (ff)(5)(B)(vi);

(*8*) The addition of subsection (gg) Offset lithographic printing and letterpress printing, with the exception of the phrases ''or other method approved by the commissioner'' in subparagraph (gg)(1)(O) and ''or alternative method as approved by the commissioner'' in clause (gg)(7)(B)(vi);

(*9*) The addition of subsection (hh) Large appliance coatings, with the exception of the phrases ''or other method approved by the commissioner'' in subparagraph (hh)(1)(CC) and ''or alternative method as approved by the commissioner'' in clause (hh)(7)(B)(vi);

(*10*) The addition of (ii) Industrial solvent cleaning, with the exception of the phrases ''or other method approved by the commissioner'' in subparagraph (ii)(1)(I) and ''or alternative method as approved by the commissioner'' in clause (ii)(6)(B)(vi); and

(*11*) The addition of (jj) Spray application equipment cleaning, with the exception of the phrase ''or other method approved by the commissioner'' in subparagraph (jj)(1)(H), the exception of subparagraph (jj)(3)(D), and the exception of the phrase ''or alternative method as approved by the commissioner'' in clause (JJ)(6)(B)(vii).

(B) Regulations of Connecticut State Agencies (RCSA) Section 22a–174–20, as published in the Connecticut Law Journal on December 4, 2012, effective October 31, 2012:

(*1*) The amendment of subsection(s) Miscellaneous metal parts and products;

(*2*) The amendment of subdivisions (aa)(1), (cc)(2), and (cc)(3);

(*3*) The amendment of subparagraph (ii)(3)(A); and

(*4*) The addition of subdivision (kk) Pleasure craft coatings.

(C) Regulations of Connecticut State Agencies (RCSA) Section 22a–174–40 entitled ''Consumer Products,'' with the exception of subdivisions (4) through (7) in subsection (c) and the exception of subparagraphs (C) and (D) in subdivision (f)(2), effective July 26, 2007.

(D) Regulations of Connecticut State Agencies (RCSA) section 22a–174–44, entitled ''Adhesives and Sealants,'' effective October 3, 2008.

(103) Revisions to the State Implementation Plan submitted by the Connecticut Department of Environmental Protection on November 18, 2009, and Connecticut Department of Energy and Environmental Protection on March 12, 2012.

(i) *Incorporation by reference.* (A) Regulations of Connecticut State Department of Environmental Protection Section 22a–174, effective December 28, 2000; as published in the Connecticut Law Journal on January 23, 2001.

(*1*) Section 22a–174–19a, ''Control of sulfur dioxide emissions from power

plants and other large stationary sources of air pollution,'' with the following exceptions which Connecticut did not submit as part of the SIP revision because they are not applicable to the Connecticut Alternative to Best Available Retrofit Technology (BART) program:

(*i*) Section 22a–174–19a(a)(5);

(*ii*) Section 22a–174–19a(a)(8);

(*iii*) Section 22a–174–19a(a)(11);

(*iv*) In Section 22a–174–19a(a)(13); the sentence ''Early reduction credits shall qualify as SO_2 DERCs.'';

(*v*) Section 22a–174–19a(d);

(*vi*) Section 22a–174–19a(e)(4);

(*vii*) Section 22a–174–19a(f) through 19a(h); and

(*viii*) In Section 22a–174–19a(i)(2), the reference to ''or (e)(4).''

(*2*) Section 22a–174–19a(c) which was approved in paragraph (c)(103)(i)(A)(1), is removed without replacement; see paragraph (c)(111)(i)(B).

(*3*) Section 22a–174–22, ''Control of nitrogen oxide emissions,'' subsection (e)(3).

(B) Connecticut General Statute, Title 16a ''Planning and Energy Policy,'' Chapter 296 ''Operation of Fuel Supply Business,'' Section 16a–21a, ''Sulfur content of home heating oil and off-road diesel fuel. Suspension of requirements for emergency,'' effective June 2, 2008, as published in the State of Connecticut General Statutes, Revision of 1958, Revised to 2009.

(ii) *Additional materials.* (A) The Connecticut Department of Environmental Protection document, ''Connecticut Regional Haze SIP Revision, Final, November 2009.''

(B) The Connecticut Department of Energy and Environmental Protection letter ''Clarification of Connecticut's 2008 $PM_{2.5}$ Attainment Demonstration,'' dated March 12, 2012, signed by Anne Gobin.

(C) The Connecticut Department of Energy and Environmental Protection letter ''Regional Haze State Implementation Plan,'' dated February 24, 2012, signed by Anne Gobin.

(D) The Connecticut Department of Energy and Environmental Protection letter ''Withdrawal of Request for Parallel Processing,'' dated November 23, 2012, signed by Anne R. Gobin.

(104) Revisions to the State Implementation Plan submitted by the Connecticut Department of Environmental Protection on December 1, 2004.

(i) *Incorporation by reference.* (A) Letter from the Connecticut Department of Environmental Protection dated December 1, 2004 submitting a revision to the Connecticut State Implementation Plan.

(B) Regulations of Connecticut State Agencies, Section 22a–174, Abatement of Air Pollution Regulations, amended April 1, 2004:

(*1*) Section 22a–174–4 ''Source monitoring, recordkeeping and reporting.''

(*2*) Section 22a–174–7 ''Air pollution control equipment and monitoring equipment operation.''

(*3*) Section 22a–174–18 ''Control of particulate matter and visible emissions,'' with the exception of the phrase ''or malfunction'' in Section 22a–174–18(j)(1) and all of Section 22a–174–18(j)(2), which CT DEEP withdrew from the SIP submittal.

(ii) *Additional materials.* (A) Letter from CT DEEP dated January 14, 2013, entitled ''Information to Support EPA's Approval of Connecticut's Requirements for Opacity.''

(B) Letter from CT DEEP dated July 8, 2013, withdrawing from CT DEEP's December 1, 2004 SIP revision the phrase ''and malfunction'' from Subsection (j)(1) of RCSA Section 22a–174–18.

(C) Letter from CT DEEP dated March 27, 2014, withdrawing from CT DEEP's December 1, 2004 SIP revision Section 22a–174–18(j)(2).

(105) Revisions to the State Implementation Plan submitted by the Connecticut Department of Environmental Protection on January 22, 2010.

(i) *Incorporation by reference.* (A) Regulations of Connecticut State Agencies (RCSA) section 22a–174–36b entitled ''Low Emission Vehicles II Program,''

(*1*) Regulations of Connecticut State Agencies (RCSA) section 22a–174–36b entitled ''Low Emission Vehicles II Program,'' effective December 22, 2005, revisions to the following provisions (including the text that appears in underline): Sections 22a–174–36b (a), (b), (d), (f) through (j), (l), (m), (n), and (o).

(*2*) Regulations of Connecticut State Agencies (RCSA) section 22a–174–36b

entitled ''Low Emission Vehicles II Program,'' effective August 10, 2009, revisions to the following provisions: Sections 22a–174–36b (c), (e), and (k), as published in the Connecticut Law Journal on September 8, 2009.

(B) Regulations of Connecticut State Agencies (RCSA) section 22a–174–27 entitled ''Emission standards and on-board diagnostic II test requirements for periodic motor vehicle inspection and maintenance,'' effective August 10, 2009, revisions to Section 22a–174–27 (b), as published in the Connecticut Law Journal on September 8, 2009.

(106) Revisions to the State Implementation Plan submitted by the Connecticut Department of Energy and Environmental Protection on April 22, 2014.

(i) *Incorporation by reference.* (A) Regulations of Connecticut State Agencies Section 22a–174–1(10) and (88), as published in the Connecticut Law Journal on July 1, 2014, effective April 15, 2014.

(B) Regulations of Connecticut State Agencies Section 22a–174–3a(k)(5), as published in the Connecticut Law Journal on July 1, 2014, effective April 15, 2014.

(C) Regulations of Connecticut State Agencies Section 22a–174–24, ''Connecticut primary and secondary ambient air quality standards,'' with the exceptions of subsections (a), (c), (g), (j), and (m), as published in the Connecticut Law Journal on July 1, 2014, effective April 15, 2014.

(D) Regulations of Connecticut State Agencies (RCSA) Section 22a–174–28 (a)(5), as published in the Connecticut Law Journal on July 1, 2014, effective April 15, 2014.

(107) Revisions to the State Implementation Plan submitted by the Connecticut Department of Energy and Environmental Protection on September 27, 2012.

(i) *Incorporation by reference.* (A) Regulations of Connecticut State Agencies Section 22a–174–2a(b)(5) introductory text and Section 22a–174–2a(b)(5)(E), as published in the Connecticut Law Journal on October 23, 2012, effective September 10, 2012.

(B) Regulations of Connecticut State Agencies Section 22a–174–2a(b)(6), as published in the Connecticut Law Journal on October 23, 2012, effective September 10, 2012.

(108) Revisions to the State Implementation Plan submitted by the Connecticut Department of Energy and Environmental Protection on October 9, 2012.

(i) *Incorporation by reference.* (A) Regulations of Connecticut State Agencies Section 22a–174–1(62), as published in the Connecticut Law Journal on October 16, 2012, effective September 10, 2012.

(B) Regulations of Connecticut State Agencies Section 22a–174–3a(i), Table 3a(i)–1, published in the Connecticut Law Journal on October 16, 2012, effective September 10, 2012.

(C) Regulations of Connecticut State Agencies revisions to Section 22a–174–3a(k), Table 3a(k)–1, published in the Connecticut Law Journal on October 16, 2012, effective September 10, 2012.

(D) Regulations of Connecticut State Agencies revisions to Section 22a–174–3a(k), Table 3a(k)–2, published in the Connecticut Law Journal on October 16, 2012, effective September 10, 2012.

(E) Regulations of Connecticut State Agencies revisions to Section 22a–174–3a (*l*)(1), published in the Connecticut Law Journal on October 16, 2012, effective September 10, 2012.

(F) Regulations of Connecticut State Agencies revisions to Section 22a–174–3a(*l*)(4)(B) introductory text and Section 22a–174–3a(*l*)(4)(B)(iv), published in the Connecticut Law Journal on October 16, 2012, effective September 10, 2012.

(109) Revisions to the State Implementation Plan submitted by the Connecticut Department of Environmental Protection on October 31, 2012.

(i) *Incorporation by reference.* (A) Connecticut Trading Agreement and Order No. 8187, Modification 1 issued to PSEG Power Connecticut LLC on July 16, 2012.

(B) Connecticut Trading Agreement and Order No. 8242, Modification 1 issued to PSEG Power Connecticut LLC on July 16, 2012.

(110) Revisions to the State Implementation Plan submitted by the Connecticut Department of Energy and Environmental Protection on April 8, 2014.

(i) *Incorporation by reference.* (A) Regulations of Connecticut State Agencies, revisions to Section 22a-174–20(a), as published in the Connecticut Law Journal on May 6, 2014, effective March 7, 2014:

(*1*) 22a–174–20(a);

(*2*) 22a–174–20(b)(2), (b)(3), (b)(4), and (b)(17);

(*3*) 22a–174–20(c); and

(*4*) 22a–174–20(x)(12).

(B) Regulations of Connecticut State Agencies, Subsection (b)(1) of Section 22a-174–20 is removed without replacement, as published in the Connecticut Law Journal on May 6, 2014, effective March 7, 2014.

(111) Revisions to the State Implementation Plan submitted by the Connecticut Department of Energy and Environmental Protection on April 22, 2014.

(i) *Incorporation by reference.* (A) Amendments to Regulations of Connecticut State Agencies (RCSA) as published in the Connecticut Law Journal on June 24, 2014, effective April 15, 2014.

(1) Revised Section 22a–174–19.

(2) Revised Section 22a–174–19a(e).

(3) Revised Section 22a–174–19a(i).

(4) Section 22a–174–19b with the exception of subsection (e), which was not submitted by the State.

(5) Revised Section 22a–174–5(b)(1).

(B) RCSA Section 22a–174–19a(c) which was approved in paragraph (c)(103)(i)(A)(1), is removed without replacement.

(ii) *Additional materials.* [Reserved]

(112) Revisions to the State Implementation Plan submitted by the Connecticut Department of Energy and Environmental Protection on December 28, 2007; September 4, 2008; September 18, 2009; October 13, 2011; December 28, 2012; January 2, 2013; and May 30, 2013.

(i) [Reserved]

(ii) *Additional materials.* (A) The Connecticut Department of Energy and Environmental Protection document, ''Adequacy Determination of the Connecticut State Implementation Plan with Regard to Clean Air Act Section 110(a)(1) and (2) for the 8-Hour Ozone National Ambient Air Quality Standard Program Infrastructure,'' Final, December 28, 2007.

(B) The Connecticut Department of Energy and Environmental Protection document, ''Adequacy Determination of the Connecticut State Implementation Plan for Clean Air Act Section 110(a) Infrastructure Elements: 1997 National Ambient Air Quality Standard for Fine Particulate Matter,'' Final, September 4, 2008.

(C) The Connecticut Department of Energy and Environmental Protection document, ''Adequacy Determination of the Connecticut State Implementation Plan with Regard to Clean Air Act Section 110(a)(1) and (2) for the 2006 Fine Particulate Matter National Ambient Air Quality Standard,'' Final, September 18, 2009.

(D) The Connecticut Department of Energy and Environmental Protection document, ''Request to Withdraw a Portion of Connecticut's $PM_{2.5}$ Infrastructure Adequacy Determination,'' January 7, 2011.

(E) The Connecticut Department of Energy and Environmental Protection document, ''Addendum to the CAA §110(a)(2)(D)(i)(I) Portion of Connecticut's Infrastructure Submittal for the 2006 $PM_{2.5}$ NAAQS,'' August 19, 2011.

(F) The Connecticut Department of Energy and Environmental Protection document, ''Adequacy Determination of the Connecticut State Implementation Plan with Regard to Clean Air Act Section 110(a)(1) and

(2) for the 2008 Lead National Ambient Air Quality Standard,'' Final, October 13, 2011.

(G) The Connecticut Department of Energy and Environmental Protection document, ''Update to Connecticut $PM_{2.5}$ Infrastructure Submittals,'' June 15, 2012.

(H) The Connecticut Department of Energy and Environmental Protection document, ''Connecticut State Implementation Plan with Regard to the Infrastructure Requirements of Clean Air Act Section 110(a)(1) and 110(s)(2) for the 2008 Ozone National Ambient Air Quality Standards, Final, December 28, 2012.

(I) The Connecticut Department of Energy and Environmental Protection document, ''Connecticut State Implementation Plan with Regard to the Infrastructure Requirements of Clean Air Act Section 110(a)(1) and 110(a)(2) for

the 2010 Nitrogen Dioxide National Ambient Air Quality Standards, Final, January 2, 2013.

(J) The Connecticut Department of Energy and Environmental Protection document, ''Connecticut State Implementation Plan for Clean Air Act Section 110(a) Infrastructure Elements: 2010 Sulfur Dioxide National Ambient Air Quality Standard, Final, May 30, 2013.

(K) The Connecticut Department of Energy and Environmental Protection letter, ''Supplement to Infrastructure State Implementation Plan (SIP) Revisions,'' August 5, 2015.

(113) Revisions to the State Implementation Plan submitted by the Connecticut Department of Energy and Environmental Protection on November 19, 2012 and December 14, 2015.

(i) *Incorporation by reference.* (A) Section 19–508–17, ''Control of Open Burning,'' which was approved in the March 1972 plan (see paragraph (b)) is removed and replaced with the following:

(*1*) Connecticut General Statute, Title 22A ''Environmental Protection,'' Chapter 446c ''Air Pollution Control,'' Section 22a–174 ''(Formerly Sec. 19–508). Powers of the commissioner. Regulations. Fees. Exemptions. General permits. Appeal of commissioner's action re permit applications,'' paragraph (f), effective March 30, 2000, as published in the General Statutes of Connecticut, revision of 1958, revised to January 1, 2015, volume 8.

(*2*) Regulations of Connecticut State Agencies (RCSA) section 22a-174–1 entitled ''Definitions,'' revisions to Section 22a-174–1(19), as published in the Connecticut Law Journal on July 1, 2014.

(B) [Reserved]

(ii) *Additional materials.* [Reserved]

(114) Revisions to the State Implementation Plan submitted by the Connecticut Department of Energy and Environmental Protection on June 27, 2016 and August 18, 2016.

(i) *Incorporation by reference.* (A) General Permit to Limit Potential to Emit from Major Stationary Sources, issuance date November 9, 2015, except for the provisions listed below, related to greenhouse gases which Connecticut withdrew from consideration as part of the SIP.

(*1*) In Section 2, the definitions for ''Carbon Dioxide Equivalent Emissions'' or ''CO_2'', ''Greenhouse Gases'' or ''GHG'', ''Hydroflourocarbon'' or ''HFC'', and ''Perfluorocarbon'' or ''PFCs'' in paragraph (a);

(*2*) In Sections 4 and 5, the words ''excluding GHG which are limited to less than 100% of Title V source threshold as defined in section 22a–174–33(a)(10)(F)(iv) of the Regulations of Connecticut State Agencies'' in paragraphs (4)(c)(2)(E)(i) and (ii), 4(c)(2)(J), 4(d)(1), and 4(g)(5)(A) and (B); and 5(a)(1) and (2);

(*3*) In Section 5, the words ''excluding GHG which are limited to less than 100% of Title V source threshold'' in the introductory paragraph;

(*4*) In Section 5, paragraphs 5(b)(2)(A)(vi) and 5(b)(2)(B)(i);

(*5*) In Section 5, the words ''and (vi)'' in paragraph 5(b)(2)(A)(vii); and

(*6*) In Section 5, the words ''other than GHG'' in paragraphs 5(b)(2)(B)(ii) and (iii).

(115) Revisions to the State Implementation Plan submitted by the Connecticut Department of Energy and Environmental Protection on July 1, 2004, January 13, 2006, November 15, 2011, and July 15, 2016.

(i) *Incorporation by reference.* (A) State of Connecticut vs. Mallace Industries Corporation, Consent Order No. 8258, issued as a final order on September 13, 2005.

(B) State of Connecticut vs. Hamilton Sundstrand, a United Technologies Company, Order No. 8029A, issued as a final order on September 3, 2009.

(C) State Order No. 8011, and attached Compliance Timetable and Appendix A (allowable limits by product classification) for Dow Chemical, U.S.A. in Gales Ferry, Connecticut, issued as State Order No. 8011, effective on October 27, 1988, and approved in paragraph (c)(48(i)(B) is removed without replacement.

(D) State Order No. 8014, and attached Compliance Timetable for Pratt & Whitney Division of United Technologies Corporation in East Hartford, Connecticut, issued as State Order No. 8014, effective on March 22, 1989, and approved in paragraph (c)(51)(i)(B) is removed without replacement.

(E) State Order No. 8021, and attached Compliance Timetable, and Appendix A (allowable limits on small, uncontrolled vents and allowable outlet gas temperatures for surface condensers) for Pfizer, Incorporated in Groton, Connecticut, issued as State Order No. 8021, effective on December 2, 1988, and approved in paragraph (c)(52)(i)B) is removed without replacement.

(F) State Order No. 8009, and attached Compliance Timetable, Appendix A, Appendix B, and Appendix C for Uniroyal Chemical Company, Inc. in Naugatuck, Connecticut, issued as State Order No. 8009, effective on September 5, 1989, and approved in paragraph (c)(53)(i)(B), is removed without replacement.

(G) State Order No. 8032, and attached Compliance Timetable for the Heminway & Bartlett Manufacturing Company in Watertown, Connecticut, issued as State Order No. 8032, effective on November 29, 1989, and approved in paragraph (c)(55)(i)(B), is removed without replacement.

(H) State Order No. 8010, for Sikorsky Aircraft Corporation, effective on January 29, 1990, as well as Addendum A and Addendum B to Order No. 8010, effective on February 7, 1996 and September 29, 1995, respectively, issued as State Order No. 8010, and two addenda, define and impose RACT on certain VOC emissions at Sikorsky Aircraft Corporation in Stratford, Connecticut, and approved in paragraph (c)(60)(i)(B) is removed without replacement.

(I) State Order No. 8200, issued by the Connecticut Department of Environmental Protection to Watson Laboratories, Inc., effective October 3, 2002, and approved in paragraph (c)(96)(i)(C) is removed without replacement.

(ii) *Additional materials*. [Reserved]

(116) Revisions to the State Implementation Plan submitted by the Connecticut Department of Energy and Environmental Protection on September 16, 2016, and January 24, 2017.

(i) *Incorporation by reference*. (A) Regulations of Connecticut State Agencies, Administrative Regulation of the Department of Energy and Environmental Protection, Municipal Waste Combustors, revisions to section 22a–174–38 as published in the Connecticut Law Journal, volume 78, no. 17, on October 25, 2016.

(*1*) Subsection (c), subdivision (8);

(*2*) Subsection (c), subdivisions (16), and (17);

(*3*) Subsection (d);

(*4*) Subsection (i), subdivisions (4)(E) and (J);

(*5*) Subsection (i), subdivision (5);

(*6*) Subsection (j), subdivision (4);

(*7*) Subsection (k), subdivision (9) with the exceptions of the phrase ''particulate matter, opacity, cadmium, lead, mercury, dioxin/furan emissions, hydrogen chloride, fugitive ash and'' and the sentence ''The maximum demonstrated municipal waste combustor unit load and maximum demonstrated particulate matter control device temperature shall be recorded for the initial performance test for dioxin/furan emissions for each particulate matter control device.''; and subdivision (10), with the exceptions of the phrase ''for particulate matter, cadmium, lead, mercury, dioxin/furan emissions, hydrogen chloride, fugitive ash and'' and the sentence ''The maximum demonstrated municipal waste combustor unit load and maximum demonstrated particulate matter control device temperature (for each particulate matter control device) shall be recorded for the initial performance test for dioxin/furan emissions.''

(*8*) Subsection (l), subdivision (3)(A)(i) with the exception of the phrase ''particulate matter, opacity, cadmium, lead, mercury, dioxin/furan emissions, hydrogen chloride, fugitive ash and''; (3)(A)(ii), with the exceptions of the term ''sulfur dioxide'' and the phrase ''carbon monoxide, municipal waste combustor unit load, particulate matter control device inlet temperature and''; (3)(A)(iv); (3)(A)(v), with the exceptions of the term ''sulfur dioxide'' the phrase ''carbon monoxide, municipal waste combustor unit load, particulate matter control device temperature and'' and the phrase ''carbon mass feed rate and''; (3)(A)(vi), with the exceptions of the term ''sulfur dioxide'' the phrase ''carbon monoxide, municipal waste combustor unit load, particulate matter control device temperature and'' and the phrase ''carbon mass feed rate and''; (B), with the exception of the phrase ''and (A)(iii)''; and (C).

(*9*) Subsection (l), subdivision (6), with the exceptions of the phrase ''particulate matter, opacity, cadmium, lead, mercury, dioxin/furan emissions, hydrogen chloride'' and the term ''or fugitive ash''.

(*10*) Subsection (a).

(B) Regulation of the Department of Energy and Environmental Protection Concerning NO_X Emissions from Fuel-Burning Emission Units, effective December 22, 2016.

(*1*) Section 22a–174–22e, Control of nitrogen oxides emissions from fuel-burning equipment at major stationary sources of nitrogen oxides, with the exception of, within paragraph (l)(7), the phrase ''or under procedures in RCSA section 22a–174–5(d).'';

(*2*) Section 22a–174–22f, High daily NO_X emitting units at non-major sources of NO_X;

(*3*) Section 22a–174–18,, revised subsection (j)(6);

(*4*), Section 22a–174–8(b)(2);

(*5*) Section 22a–174–22c, subsection (g)(3);

(*6*) Section 22a–174–38, revised subsections (b)(1) through (6).

(117) Revisions to the State Implementation Plan submitted by the Connecticut Department of Energy and Environmental Protection on September 14, 2015.

(i) *Incorporation by reference.* (A) ''Control of Organic Compound Emissions,'' Regulation 22a–174–20, the sections listed below, effective July 8, 2015, as published in the Connecticut Law Journal on November 24, 2015.

(*1*) Section 20(a)(7);

(*2*) Section (b)(10);

(*3*) Sections (b)(12) through (b)(16);

(*4*) Section (20)(ee)

(B) ''Control of Organic Compound Emissions,'' Regulation 22a–174–30a ''Stage I Vapor Recovery,'' effective July 8, 2015, as published in the Connecticut Law Journal on November 24, 2015.

(C) ''Control of Organic Compound Emissions,'' Regulation 22a–174–32(b)(3), effective July 8, 2015, as published in the Connecticut Law Journal on November 24, 2015.

(D) House Bill No. 6534, Public Act No. 13–120, ''An Act Concerning Gasoline Vapor Recovery Systems,'' approved June 18, 2013.

(ii) Additional materials.

(A) Letter from the Connecticut Department of Energy and Environmental Protection, dated September 14, 2015, submitting a revision to the Connecticut State Implementation Plan.

[37 FR 10855, May 31, 1972]

EDITORIAL NOTE: For FEDERAL REGISTER citations affecting § 52.370, see the List of CFR Sections Affected, which appears in the Finding Aids section of the printed volume and at *www.fdsys.gov*.

EFFECTIVE DATE NOTE: At 82 FR 18870, June 23, 2017, § 52.370 was amended by adding paragraph (c)(114), effective June 23, 2017, until Nov. 8, 2020.

§ 52.371 Classification of regions.

The Connecticut plan was evaluated on the basis of the following classifications:

Air quality control region	Pollutant				
	Particulate matter	Sulfur oxides	Nitrogen dioxide	Carbon monoxide	Ozone
New Jersey-New York-Connecticut Interstate	I	I	I	I	I
Hartford-New Haven-Springfield Interstate	I	I	III	I	I
Northwestern Intrastate	III	III	III	III	III
Eastern Intrastate	II	III	III	III	III

[37 FR 10855, May 31, 1972, as amended at 39 FR 16346, May 8, 1974; 45 FR 84787, Dec. 23, 1980]

§ 52.372 Extensions.

(a) [Reserved]

(b) The Administrator hereby extends until December 31, 1996, the attainment date for particulate matter for the New

Haven PM10 nonattainment area, as requested by the State of Connecticut on March 22, 1996 and based on monitored air quality data for the national ambient air quality standard for PM10 during the years 1993–95.

[61 FR 56900, Nov. 5, 1996, as amended at 62 FR 14331, Mar. 26, 1997; 64 FR 67192, Dec. 1, 1999]

§ 52.373 Approval status.

(a) The Administrator approves the general procedures of the state's sulfur control regulations (19–508–19) and accompanying narrative submitted on October 23, 1981, and November 4, 1981 and identified under § 52.370(c)(18), provided that any individual source approvals granted by the state under the Air Pollution Control/Energy Trade Option and solid fuel burning permitting system are submitted to EPA as SIP revisions.

(b) The Administrator approves the total suspended particulate regulation for foundry sand processes as submitted and identified under paragraph (c)(22) of this section. This includes only the requirement to remove ninety percent of the particulate matter and not the requirement to emit not more than 0.75 pounds of particulate per ton of material cast, a provision which may be found in state regulation 19–508–18(f)(3).

[61 FR 38576, July 25, 1996]

§ 52.374 Attainment dates for national standards.

The following table presents the latest dates by which the national standards are to be attained. The dates reflect the information presented in Connecticut's plan.

Air quality control region	Pollutant					
	SO_2		PM_{10}	NO_2	CO	O_3
	Primary	Secondary				
AQCR 41: Eastern Connecticut Intrastate (See 40 CFR 81.183)	(a)	(b)	(a)	(a)	(a)	(d)
AQCR 42: Hartford-New Haven-Springfield Interstate Area (See 40 CFR 81.26).						
All portions except City of New Haven	(a)	(b)	(a)	(a)	(a)	(d)
City of New Haven	(a)	(b)	(c)	(a)	(a)	(d)
AQCR 43: New Jersey-New York-Connecticut Interstate Area (See 40 CFR 81.13)	(a)	(a)	(a)	(a)	(a)	(d)
AQCR 44: Northwestern Connecticut Intrastate (See 40 CFR 81.184)	(a)	(b)	(a)	(a)	(a)	(d)

a. Air quality levels presently below primary standards or area is unclassifiable.
b. Air quality levels presently below secondary standards or area is unclassifiable.
c. December 31, 1996 (two 1-year extensions granted).
d. November 15, 2007.

[45 FR 84787, Dec. 23, 1980, as amended at 61 FR 38576, July 25, 1996; 62 FR 14331, Mar. 26, 1997; 64 FR 12013, Mar. 10, 1999; 66 FR 663, Jan. 3, 2001]

§ 52.375 Certification of no sources.

The State of Connecticut has certified to the satisfaction of EPA that no sources are located in the state which are covered by the following Control Technique Guidelines:

(a) Large Petroleum Dry Cleaners.

(b) In its December 8, 2006 submittal to EPA pertaining to reasonably available control technology requirements for the 1997 8-hour ozone standard, the State of Connecticut certified to the satisfaction of EPA that no sources are located in the state that are covered by the following Control Technique Guidelines:

(1) Automobile Coatings;

(2) Large Petroleum Dry Cleaners;

(3) Large Appliance Coating;

(4) Natural Gas and Gas Processing Plants;

(5) Flat Wood Paneling Coatings; and

(6) Control of VOC Leaks from Petroleum Refineries.

(c) Air Oxidation Processes/SOCMI.

(d) Manufacturers of High-density Polyethylene and Polypropylene Resins.

(e) Synthetic organic chemical manufacturing industry (SOCMI) distillation.

(f) Synthetic organic chemical manufacturing industry (SOCMI) reactor vessels.

(g) In its April 29, 2010 submittal to EPA pertaining to reasonably available control technology requirements for the 1997 8-hour ozone standard, the State of Connecticut certified to the satisfaction of EPA that no sources are located in the state that are covered by the following Control Technique Guidelines:

(1) Flat wood paneling coating;

(2) Fiberglass boat manufacturing; and

(3) Automobile and light duty truck assembly coating.

(h) In its July 18, 2014 submittal to EPA pertaining to reasonably available control technology requirements for the 2008 8-hour ozone standard, the State of Connecticut certified to the satisfaction of EPA that no sources are located in the state that are covered by the following Control Technique Guidelines:

(1) Automobile coatings;

(2) Large petroleum dry cleaners;

(3) Fiberglass boat manufacturing;

(4) Equipment leaks from natural gas and gasoline processing plants;

(5) Petroleum refineries;

(6) Control of refinery vacuum producing systems;

(7) Wastewater separators and process unit turnarounds; and

(8) Flatwood paneling coatings.

[50 FR 37178, Sept. 12, 1985, as amended at 53 FR 17936, May 19, 1988; 65 FR 62623, Oct. 19, 2000; 78 FR 38591, June 27, 2013; 79 FR 32875, June 9, 2014; 82 FR 35456, July 31, 2017]

§ 52.376 Control strategy: Carbon monoxide.

(a) Approval—On January 12, 1993, the Connecticut Department of Environmental Protection submitted a revision to the carbon monoxide State Implementation Plan for the 1990 base year emission inventory. The inventory was submitted by the State of Connecticut to satisfy Federal requirements under sections 172(c)(3) and 187(a)(1) of the Clean Air Act as amended in 1990, as a revision to the carbon monoxide State Implementation Plan for the Hartford/New Britain/Middletown carbon monoxide nonattainment area, the New Haven/Meriden/Waterbury carbon monoxide nonattainment area, and the Connecticut Portion of the New York-N. New Jersey-Long Island carbon monoxide nonattainment area.

(b) Approval—On September 30, 1994, the Connecticut Department of Environmental Protection submitted a request to redesignate the Hartford/New Britain/Middletown Area carbon monoxide nonattainment area to attainment for carbon monoxide. The redesignation request and the 1995–2005 initial ten-year maintenance plan meet the redesignation requirements in sections 107(d)(3)(E) and 175A of the Act as amended in 1990, respectively.

(c) Approval—On January 12, 1993 and April 7, 1994, the Connecticut Department of Environmental Protection submitted revisions to the carbon monoxide State Implementation Plan for VMT forecasts, contingency measures, and attainment demonstration for CO. These VMT forecasts, contingency measures, and attainment demonstration were submitted by Connecticut to satisfy Federal requirements under sections 187(a)(2)(A), 187(a)(3) and 187(a)(7) of the Clean Air Act, as amended in 1990, as revisions to the carbon monoxide State Implementation Plan.

(d) Approval—On January 17, 1997, the Connecticut Department of Environmental Protection submitted a request to redesignate the New Haven/Meriden/Waterbury carbon monoxide nonattainment area to attainment for carbon monoxide. The redesignation request and the 1998–2008 initial ten-year maintenance plan meet the redesignation requirements in sections 107(d)(3)(E) and 175A of the Act as amended in 1990, respectively.

(e) Approval—In December, 1996, the Connecticut Department of Environmental Protection submitted a revision to the carbon monoxide State Implementation Plan for the 1993 periodic emission inventory. The inventory was submitted by the State of Connecticut to satisfy Federal requirements under section 187(a)(5) of the Clean Air Act as amended in 1990, as a revision to the carbon monoxide State Implementation Plan.

(f) Approval—On May 29, 1998, the Connecticut Department of Environmental Protection submitted a request to redesignate the Connecticut portion of the New York-N. New Jersey-Long Island carbon monoxide nonattainment area to attainment for carbon monoxide. The redesignation request and the 2000–2010 initial ten-year maintenance plan meet the redesignation requirements in sections 107(d)(3)(E) and 175A of the Act as amended in 1990, respectively.

(g) Approval—On October 7, 1999, the Connecticut Department of Environmental Protection submitted a revision to the carbon monoxide State Implementation Plan that removes the oxygenated fuel requirement for the Connecticut portion of the New York—N. New Jersey—Long Island area and converts the program to a contingency measure. If a violation of the carbon monoxide ambient air quality standard were to occur, the State would be required to reimplement the program.

(h) Approval—On June 28, 2004, the Connecticut Department of Environmental Protection (CT DEP) submitted a request to establish limited maintenance plans for the Hartford-New Britain-Middletown Connecticut carbon monoxide attainment area, the New Haven-Meriden-Waterbury Connecticut carbon monoxide attainment area, and the Connecticut portion of the New York-Northern New Jersey-Long Island carbon monoxide attainment area for the remainder of the individual area's initial ten-year maintenance plan. As part of the maintenance plan request, CT DEP also requested approval of a second follow-on ten-year carbon monoxide maintenance plan for the Hartford-New Britain-Middletown carbon monoxide attainment area (period 2006 to 2015), for the New Haven-Meriden-Waterbury carbon monoxide attainment area (period 2009 to 2018), and for the Connecticut portion of the New York-Northern New Jersey-Long Island carbon monoxide attainment area (period 2011 to 2020). The State of Connecticut has committed to: maintain a continuous carbon monoxide monitoring network in each carbon monoxide maintenance area; implement contingency measures in the event of an exceedance of the carbon monoxide National Ambient Air Quality Standard (NAAQS) in any of the three maintenance areas; coordinate with EPA in the event the carbon monoxide design value(s) in any maintenance area(s) exceed 7.65 ppm, to verify the validity of the data and, if warranted based on the data review, develop a full maintenance plan(s) for the affected maintenance area(s); and, ensure that project-level carbon monoxide evaluations of transportation projects in each area are carried out as part of environmental reviews or Connecticut's indirect source permitting program. The limited maintenance plans satisfy all applicable requirements of section 175A of the Clean Air Act. Approval of a Limited Maintenance Plan is conditioned on maintaining levels of ambient carbon monoxide levels below the required limited maintenance plan 8-hour carbon monoxide design value criterion of 7.65 parts per million. If the Limited Maintenance Plan criterion is no longer satisfied, Connecticut must develop a full maintenance plan to meet Clean Air Act requirements.

[60 FR 55320, Oct. 31, 1995, as amended at 61 FR 38577, July 25, 1996; 63 FR 53286, Oct. 5, 1998; 64 FR 12014, Mar. 10, 1999; 64 FR 67192, Dec. 1, 1999; 69 FR 50073, Aug. 13, 2004]

§ 52.377 Control strategy: Ozone.

(a) Revisions to the State Implementation Plan submitted by the Connecticut Department of Environmental Protection on December 30, 1997 and January 7, 1998. These revisions are for the purpose of satisfying the rate of progress requirement of section 182(c)(2) through 1999, and the contingency measure requirements of sections 172(c)(9) and 182(c)(9) of the Clean Air Act, for the Greater Hartford serious ozone nonattainment area, and the Connecticut portion of the NY-NJ-CT severe ozone nonattainment area.

(b) Approval—Revisions to the State Implementation Plan submitted by the Connecticut Department of Environmental Protection on September 16, 1998, February 8, 2000 and June 17, 2003. The revisions are for the purpose of satisfying the attainment demonstration requirements of section 182(c)(2)(A) of the Clean Air Act for the

Greater Connecticut serious ozone nonattainment area. The revision establishes an attainment date of November 15, 2007 for the Greater Connecticut serious ozone nonattainment area. Connecticut commits to conduct a mid-course review to assess modeling and monitoring progress achieved toward the goal of attainment by 2007, and submit the results to EPA by December 31, 2004. The June 17, 2003 revision establishes MOBILE6-based motor vehicle emissions budgets for 2007 of 51.9 tons per day of volatile organic compounds (VOC) and 98.4 tons per day of nitrogen oxides (NO_X) to be used in transportation conformity in the Greater Connecticut serious ozone nonattainment area.

(c) Approval—Revisions to the State Implementation Plan submitted by the Connecticut Department of Environmental Protection on October 15, 2001 and June 17, 2003. These revisions are for the purpose of satisfying the rate of progress requirement of section 182 (c)(2)(B) through 2007, and the contingency measure requirements of section 182 (c)(9) of the Clean Air Act, for the Connecticut portion of the NY-NJ-CT severe ozone nonattainment area. The October 15, 2001 revision establishes motor vehicle emissions budgets for 2002 of 15.20 tons per day of VOC and 38.39 tons per day of NO_X to be used in transportation conformity in the Connecticut portion of the NY-NJ-CT severe ozone nonattainment area. The June 17, 2003 revision establishes motor vehicle emissions budgets for 2005 of 19.5 tons per day of VOC and 36.8 tons per day of NO_X to be used in transportation conformity in the Connecticut portion of the NY-NJ-CT severe ozone nonattainment area.

(d) Approval—Revisions to the State Implementation Plan submitted by the Connecticut Department of Environmental Protection on September 16, 1998, February 8, 2000, October 15, 2001 and June 17, 2003. The revisions are for the purpose of satisfying the attainment demonstration requirements of section 182(c)(2)(A) of the Clean Air Act for the Connecticut portion of the NY-NJ-CT severe ozone nonattainment area. The June 17, 2003 revision establishes MOBILE6-based motor vehicle emissions budgets for 2007 of 16.4 tons per day of VOC and 29.7 tons per day of NO_X to be used in transportation conformity in the Connecticut portion of the NY-NJ-CT severe ozone nonattainment area. Connecticut commits to adopt and submit by October 31, 2001, additional necessary regional control measures to offset the emission reduction shortfall in order to attain the one-hour ozone standard by November 2007. Connecticut commits to adopt and submit by October 31, 2001, additional necessary intrastate control measures to offset the emission reduction shortfall in order to attain the one-hour ozone standard by November 2007. Connecticut commits to adopt and submit additional restrictions on VOC emissions from mobile equipment and repair operations; and requirements to reduce VOC emissions from certain consumer products. Connecticut also commits to conduct a mid-course review to assess modeling and monitoring progress achieved toward the goal of attainment by 2007, and submit the results to EPA by December 31, 2004.

(e) Commitment Fulfillment—Connecticut has fulfilled the commitment in section 52.377(d), to adopt additional NO_X and VOC control measures to meet the emission reduction shortfall in its 1-hour severe ozone nonattainment area.

(f) Determination of Attainment. Effective September 30, 2010, EPA is determining that the Greater Connecticut 8-hour ozone nonattainment area has attained the 1997 8-hour ozone standard. Under the provisions of EPA's ozone implementation rule (*see* 40 CFR 51.918), this determination suspends the reasonable further progress and attainment demonstration requirements of section 182(b)(1) and related requirements of section 172(c)(9) of the Clean Air Act for as long as the area does not monitor any violations of the 1997 8-hour ozone standard. If a violation of the 1997 ozone NAAQS is monitored in the Greater Connecticut 8-hour ozone nonattainment area, this determination shall no longer apply.

In addition, this area met its June 15, 2010 attainment deadline for the 1997 ozone standard.

(g) Approval—Submittal from the Connecticut Department of Environmental Protection, dated December 28, 2007, to address the Clean Air Act (CAA) infrastructure requirements for the 1997 ozone National Ambient Air Quality Standard (NAAQS). This submittal satisfies the requirements of CAA sections 110(a)(2)(A), (B), (C), (E), (F), (G), (H), (J), (K), (L), and (M).

(h) Conditional Approval—Submittal from the Connecticut Department of Environmental Protection, dated December 28, 2007, to address the Clean Air Act (CAA) infrastructure requirements for the 1997 ozone National Ambient Air Quality Standard (NAAQS). On May 2, 2011, the State of Connecticut supplemented this submittal with a commitment to address the requirements of section 110(a)(2)(D)(ii) of the CAA that requires notification of affected states for Prevention of Significant Deterioration purposes. EPA is conditionally approving Connecticut's submittal with respect to CAA section 110(a)(2)(D)(ii).

(i) Determination of Attainment for the One-Hour Ozone Standard. Effective April 16, 2012, EPA is determining that the Greater Connecticut one-hour ozone nonattainment area did not meet its applicable one-hour ozone attainment date of November 15, 2007, based on 2005–2007 complete, quality-assured ozone monitoring data. Separate from and independent of this determination, EPA is determining that the Greater Connecticut one-hour ozone nonattainment area met the one-hour ozone standard, based on 2008–2010 complete, quality-assured ozone monitoring data at all monitoring sites in the area. EPA's review of the ozone data shows that the area began attaining the one-hour ozone standard during the 2006–2008 monitoring period, and has continued attaining the one-hour standard through the 2007–2009 and 2008–2010 monitoring periods.

(j) Determination of Attainment for the One-Hour Ozone Standard. Effective July 18, 2012, EPA is determining that the New York-Northern New Jersey-Long Island (NY-NJ-CT) one-hour ozone nonattainment area did not meet its applicable one-hour ozone attainment date of November 15, 2007, based on 2005–2007 complete, quality-assured and certified ozone monitoring data. Separate from and independent of this determination, EPA is determining that the New York-Northern New Jersey-Long Island (NY-NJ-CT) one-hour ozone nonattainment area has attained the one-hour ozone standard, based on 2008–2010 complete, quality-assured and certified ozone monitoring data at all monitoring sites in the area and data showing the area continued to attain through 2011.

(k) Determination of Attainment for the Eight-Hour Ozone Standard. Effective July 18, 2012 EPA is determining, that complete, quality-assured and certified ozone monitoring data for 2007–2009 show the NY-NJ-CT eight-hour ozone nonattainment area attained the 1997 eight-hour ozone standard by its June 15, 2010 attainment deadline. Therefore, EPA has met the requirement pursuant to CAA section 181(b)(2)(A) to determine, based on the area's air quality data as of the attainment date, whether the area attained the standard. EPA also determined that the NY-NJ-CT nonattainment area will not be reclassified for failure to attain by its applicable attainment date under section 181(b)(2)(A). EPA is also determining that the NY-NJ-CT eight-hour ozone nonattainment area currently continues to attain the eight-hour ozone NAAQS, based on complete, quality-assured and certified data for 2008–2010 and data through 2011. This determination, in accordance with 40 CFR 51.918, suspends the requirements for this area to submit an attainment demonstration, associated reasonably available control measures, a reasonable further progress plan, contingency measures, and other planning SIPs related to attainment of the standard for as long as this area continues to meet the 1997 annual eight-hour ozone NAAQS.

(l) Approval—Revisions to the Connecticut State Implementation Plan (SIP) submitted on December 8, 2006. The SIP revision satisfies the requirement to implement reasonably available control technology (RACT) for sources of volatile organic compounds (VOC) and oxides of nitrogen (NO_X) for purposes of the 1997 8-hour ozone standard. Specifically, the following sections of the Regulations of Connecticut

State Agencies are approved for this purpose: For VOC RACT, 22a–174–20, Control of Organic Compound Emissions, 22a–174–30, Dispensing of Gasoline/Stage I and Stage II Vapor Recovery, and 22a–174–32, RACT for Organic Compounds; for NO_X RACT, 22a–174–22, Control of Nitrogen Oxide Emissions, and 22a–174–38, Municipal Waste Combustors.

(m) *Approval.* (1) Revisions to the State Implementation Plan submitted by the Connecticut Department of Environmental Protection on August 18, 2000, December 12, 2002, July 1, 2004, January 13, 2006. The revisions consist of 148 single source emission trading orders necessary for satisfying Reasonable Available Control Technology requirements for nitrogen oxides during specific time periods. All trading orders expired before January 1, 2013, with the exception of Trading Agreement and Order 8242, in paragraph (m)(1)(xlii) of this section, issued to PSEG Power Connecticut, LLC in Bridgeport, Connecticut on February 12, 2003. Trading Agreement and Order 8242 was issued to reflect a change in ownership at the source.

(i) Trading Agreement and Order No. 8116 Modification No. 1 issued to the Connecticut Resources Recovery Authority in Hartford on April 29, 1999.

(ii) Trading Agreement and Order No. 1494A issued to the Connecticut Resources Recovery Authority in Hartford on May 4, 2001.

(iii) Trading Agreement and Order No. 8116A issued to The Connecticut Resources Recovery Authority in Hartford on March 18, 2003.

(iv) Trading Agreement and Order No. 8116B issued to The Connecticut Resources Recovery Authority in Hartford on April 11, 2005.

(v) Order No. 1494 Modification No. 2 issued to The Connecticut Light and Power Company in Branford, Greenwich, Hartford, Montville, Middletown, Milford, Preston, Norwalk, and Torrington on May 6, 1998.

(vi) Order No. 1494 Modification No. 3 Issued to The Connecticut Light and Power Company In Branford, Greenwich, Hartford, Montville, Middletown, Milford, Preston, Norwalk, and Torrington on February 3, 1999.

(vii) Consent Order No. 1494 Modification No. 4 issued to Connecticut Light and Power Company in Branford, Greenwich, Hartford, Montville, Middletown, Milford, Preston, Norwalk, and Torrington on April 29, 1999.

(viii) Order No. 1494 Modification No. 5 issued to The Connecticut Light and Power Company in Branford, Greenwich, Hartford, Montville, Middletown, Milford, Preston, Norwalk, and Torrington on November 29, 1999.

(ix) Order No. 1494 Modification No. 6 issued to The Connecticut Light and Power Company in Branford, Greenwich, Hartford, Montville, Middletown, Milford, Preston, Norwalk, and Torrington on April 30, 2000.

(x) Trading Agreement and Order No. 8154 Modification No. 1 issued to Combustion Engineering, Inc. in Windsor on June 3, 1998.

(xi) Trading Agreement and Order No. 8154 Modification No. 2 issued to Combustion Engineering, Inc. in Windsor on April 29, 1999.

(xii) Trading Agreement and Order No. 8154 Modification No. 3 issued to Combustion Engineering, Inc. in Windsor on April 21, 2002.

(xiii) Trading Agreement and Order No. 8154A issued to Combustion Engineering, Inc. in Windsor on April 26, 2003.

(xiv) Consent Order No. 1626 issued to Borough of Naugatuck in Naugatuck on February 14, 2001.

(xv) Consent Order No. 1626 Modification No. 1 issued to Borough of Naugatuck in Naugatuck on July 31, 2002.

(xvi) Trading Agreement and Order No. 8247 issued to Borough of Naugatuck in Naugatuck on April 26, 2003.

(xvii) Trading Agreement and Order No. 8159 issued to The Connecticut Light and Power Company in Milford on April 29, 1999.

(xviii) Trading Agreement and Order No. 8181 issued to Devon Power, LLC in Milford on January 12, 2000.

(xix) Trading Agreement and Order No. 8181A issued to Devon Power, LLC in Milford on April 22, 2003.

(xx) Trading Agreement and Order No. 8181A Modification No. 1 issued to Devon Power, LLC in Milford on March 21, 2005.

(xxi) Trading Agreement and Order No. 8219 issued to Devon Power, LLC in Milford on March 22, 2002.

(xxii) Trading Agreement and Order No. 8219A issued to Devon Power, LLC in Milford on April 30, 2003.

(xxiii) Trading Agreement and Order No. 8219A Modification No. 1 issued to Devon Power, LLC in Milford on September 16, 2004.

(xxiv) Trading Agreement and Order No. 8251 issued to Devon Power, LLC in Milford on September 15, 2003.

(xxv) Trading and Agreement Order No. 8251 Modification No. 1 issued to Devon Power, LLC in Milford on March 21, 2005.

(xxvi) Trading Agreement and Order No. 8109 issued to Hamilton Sundstrand Corporation in Windsor Locks on April 29, 2003.

(xxvii) Trading Agreement and Order No. 8093A issued to Pfizer, Inc. in Groton on April 29, 1999.

(xxviii) Trading Agreement and Order No. 8093B issued to Pfizer, Inc. in Groton on December 5, 2001.

(xxix) Trading Agreement and Order No. 8093C issued to Pfizer, Inc. in Groton on April 29, 2003.

(xxx) Trading Agreement and Order No. 8093C Modification No. 1 issued to Pfizer, Inc. in Groton on April 11, 2005.

(xxxi) Trading Agreement and Order No. 8136 issued to Pfizer, Inc. in Groton on April 29, 1999.

(xxxii) Trading Agreement and Order No. 8136A issued to Pfizer, Inc. in Groton on April 14, 2003.

(xxxiii) Trading Agreement and Order No. 8119 Modification No. 1 issued to City of Norwich Department of Public Utilities in Norwich on April 29, 1999.

(xxxiv) Trading Agreement and Order No. 8119A issued to City of Norwich Department of Public Utilities in Norwich on April 29, 2003.

(xxxv) Trading Agreement and Order No. 8119A Modification No. 1 issued to City of Norwich Department Of Public Utilities in Norwich on March 21, 2005.

(xxxvi) Trading Agreement and Order No. 8092 Modification No. 1 issued to The United Illuminating Company in Bridgeport on April 30, 1999.

(xxxvii) Trading Agreement and Order No. 8103 Modification No. 1 issued to The United Illuminating Company in Bridgeport on February 18, 1997.

(xxxviii) Trading Agreement and Order No. 8103 Modification No. 2 issued to The United Illuminating Company in Bridgeport on April 30, 1999.

(xxxix) Trading Agreement and Order No. 8177 Modification 1 issued to Wisvest-Connecticut, LLC in Bridgeport on March 12, 2001.

(xl) Trading Agreement and Order No. 8241 issued to PSEG Power Connecticut, LLC in Bridgeport on February 13, 2003.

(xli) Trading Agreement and Order No. 8241 Modification No. 1 issued to PSEG Power Connecticut, LLC in Bridgeport on September 15, 2004.

(xlii) Trading Agreement and Order No. 8242 issued to PSEG Power Connecticut, LLC in Bridgeport on February 13, 2003.

(xliii) Trading Agreement and Order No. 8243 issued to PSEG Power Connecticut, LLC in New Haven on February 13, 2003.

(xliv) Trading Agreement and Order No. 8244 issued to PSEG Power Connecticut, LLC in Bridgeport on February 13, 2003.

(xlv) Trading Agreement and Order No. 8244 Modification No. 1 issued to PSEG Power Connecticut, LLC in Bridgeport on March 21, 2005.

(xlvi) Trading Agreement and Order No. 8253 issued to PSEG Power Connecticut, LLC in Bridgeport on July 23, 2003.

(xlvii) Trading Agreement and Order No. 8253 Modification No. 1 issued to PSEG Power Connecticut, LLC in Bridgeport on September 15, 2004.

(xlviii) Trading Agreement and Order No. 8115 Modification No. 2 issued to University of Connecticut in Storrs on April 29, 1999.

(xlix) Trading Agreement and Order No. 8115B issued to University of Connecticut in Storrs on March 21, 2003.

(l) Trading Agreement and Order No. 8107 Modification No. 1 issued to Northeast Nuclear Energy Company in Waterford on April 29, 1999.

(li) Trading Agreement and Order No. 8107 Modification No. 2 issued to Northeast Nuclear Energy Company in Waterford on March 29, 2001.

(lii) Trading Agreement and Order No. 8152 issued to Northeast Nuclear Energy Company in Waterford on July 9, 1998.

(liii) Trading Agreement and Order No. 8152 Modification No. 1 issued to Northeast Nuclear Energy Company in Waterford on December 30, 1998.

(liv) Trading Agreement and Order No. 8152A issued to Northeast Nuclear Energy Company in Waterford on June 28, 1999.

(lv) Trading Agreement and Order No. 8221 issued to Dominion Nuclear Connecticut, Inc. in Waterford on March 29, 2001.

(lvi) Trading Agreement and Order No. 8221A issued to Dominion Nuclear Connecticut, Inc. in Waterford on April 28, 2003.

(lvii) Trading Agreement and Order No. 8222 issued to Dominion Nuclear Connecticut, Inc. in Waterford on March 29, 2001.

(lviii) Trading Agreement and Order No. 8222A issued to Dominion Nuclear Connecticut, Inc. in Waterford on April 28, 2003.

(lix) Trading Agreement and Order No. 8180 issued to Connecticut Jet Power LLC in Branford, Greenwich, and Torrington on January 12, 2000.

(lx) Trading Agreement and Order No. 8180 Modification No. 1 issued to Connecticut Jet Power, LLC in Branford, Greenwich, and Torrington on May 7, 2002.

(lxi) Trading Agreement and Order No. 8180A issued to Connecticut Jet Power, LLC in Branford, Greenwich, and Torrington on April 22, 2003.

(lxii) Trading Agreement and Order No. 8180A Modification No. 1 issued to Connecticut Jet Power, LLC in Branford, Greenwich, and Torrington on March 21, 2005.

(lxiii) Trading Agreement and Order No. 8114 Modification No. 1 issued to Cytec Industries, Inc. in Wallingford on April 29, 1999.

(lxiv) Trading Agreement and Order No. 8114 Modification No. 2 issued to Cytec Industries, Inc. in Wallingford on May 26, 2001.

(lxv) Trading Agreement and Order No. 8114A issued to Cytec Industries, Inc. in Wallingford on April 24, 2003.

(lxvi) Trading Agreement and Order No. 8117 issued to Sprague Paperboard, Inc. in Versailles on December 10, 2002.

(lxvii) Trading Agreement and Order No. 8117A issued to Sprague Paperboard, Inc. in Versailles on September 29, 2003.

(lxviii) Trading Agreement and Order No. 8117B issued to Sprague Paperboard, Inc. in Versailles on April 25, 2005.

(lxix) Trading Agreement and Order No. 8157 issued to The Connecticut Light and Power Company in Middletown on April 29, 1999.

(lxx) Trading Agreement and Order No. 8160 issued to The Connecticut Light and Power Company in Middletown on April 29, 1999.

(lxxi) Trading Agreement and Order No. 8162 issued to The Connecticut Light and Power Company in Middletown on April 29, 1999.

(lxxii) Trading Agreement and Order No. 8182 issued to Middletown Power, LLC in Middletown on January 12, 2000.

(lxxiii) Trading Agreement and Order No. 8182A issued to Middletown Power, LLC in Middletown on April 22, 2003.

(lxxiv) Trading Agreement and Order No. 8182A Modification No. 1 issued to Middletown Power, LLC in Middletown on March 21, 2005.

(lxxv) Trading Agreement and Order No. 8213 issued to Middletown Power, LLC in Middletown on March 22, 2002.

(lxxvi) Trading Agreement and Order No. 8213A issued to Middletown Power, LLC in Middletown on April 30, 2003.

(lxxvii) Trading Agreement and Order No. 8213A Modification No. 1 issued to Middletown Power, LLC in Middletown on September 16, 2004.

(lxxviii) Trading Agreement and Order No. 8214 issued to Middletown Power, LLC in Middletown on March 22, 2002.

(lxxix) Trading Agreement and Order No. 8214A issued to Middletown Power, LLC in Middletown on April 30, 2003.

(lxxx) Trading Agreement and Order No. 8214A Modification No. 1 issued to Middletown Power, LLC in Middletown on September 16, 2004.

(lxxxi) Trading Agreement and Order No. 8215 issued to Middletown Power, LLC in Middletown on March 22, 2002.

(lxxxii) Trading Agreement and Order No. 8215A issued to Middletown Power, LLC in Middletown on April 30, 2003.

(lxxxiii) Trading Agreement and Order No. 8215A Modification No. 1 issued to Middletown Power, LLC in Middletown on September 16, 2004.

(lxxxiv) Consent Order No. 8227 issued to Middletown Power, LLC in Middletown on March 11, 2002.

(lxxxv) Trading Agreement and Order No. 8227A issued to Middletown Power, LLC in Middletown on April 26, 2003.

(lxxxvi) Trading Agreement and Order No. 8227A Modification 1 issued to Middletown Power, LLC in Middletown on July 18, 2003.

(lxxxvii) Trading Agreement and Order No. 8156 issued to The Connecticut Light and Power Company in Montville on April 29, 1999.

(lxxxviii) Trading Agreement and Order No. 8161 issued to The Connecticut Light and Power Company in Montville on April 29, 1999.

(lxxxix) Trading Agreement and Order No. 8183 issued to Montville Power, LLC in Montville on January 12, 2000.

(xc) Trading Agreement and Order No. 8183A issued to Montville Power, LLC in Montville on April 22, 2003.

(xci) Trading Agreement and Order No. 8183A Modification No. 1 issued to Montville Power, LLC in Montville on March 21, 2005.

(xcii) Trading Agreement and Order No. 8216 issued to Montville Power, LLC in Montville on March 22, 2002.

(xciii) Trading Agreement and Order No. 8216A issued to Montville Power, LLC in Montville on April 30, 2003.

(xciv) Trading Agreement and Order No. 8216A Modification No. 1 issued to Montville Power, LLC in Montville on September 16, 2004.

(xcv) Trading Agreement and Order No. 8217 issued to Montville Power, LLC in Montville on March 22, 2002.

(xcvi) Trading Agreement and Order No. 8217A issued to Montville Power, LLC in Montville on April 30, 2003.

(xcvii) Trading Agreement and Order No. 8217A Modification No. 1 issued to Montville Power, LLC in Montville on September 16, 2004.

(xcviii) Trading Agreement and Order No. 8158 issued to The Connecticut Light and Power Company in Norwalk on April 29, 1999.

(xcix) Trading Agreement and Order No. 8184 issued to Norwalk Power, LLC in Norwalk on January 12, 2000.

(c) Trading Agreement and Order No. 8184A issued to Norwalk Power, LLC in Norwalk on April 22, 2003.

(ci) Trading Agreement and Order No. 8184A Modification No. 1 issued to Norwalk Power, LLC in Norwalk on March 21, 2005.

(cii) Trading Agreement and Order No. 8218 issued to Norwalk Power, LLC in Norwalk on March 22, 2002.

(ciii) Trading Agreement and Order No. 8218A issued to Norwalk Power, LLC in Norwalk on April 30, 2003.

(civ) Trading Agreement and Order No. 8218A Modification No. 1 issued to Norwalk Power, LLC in Norwalk on September 16, 2004.

(cv) Trading Agreement and Order No. 8134 issued to United Technologies Corporation in East Hartford on January 24, 2000.

(cvi) Trading Agreement and Order No. 8134A issued to United Technologies Corporation in East Hartford on April 15, 2003.

(cvii) Trading Agreement and Order No. 8248 issued to United Technologies Corporation in East Hartford on August 19, 2003.

(cviii) Trading Agreement and Order No. 8175 issued to Northeast Generation Company in Berlin on February 1, 2000.

(cix) Trading Agreement and Order No. 8175 Modification No. 1 issued to Northeast Generation Company in Berlin on March 13, 2000.

(cx) Trading Agreement and Order No. 8175A issued to Northeast Generation Company in Berlin on April 28, 2003.

(cxi) Trading Agreement and Order No. 8175A Modification No. 1 issued to Northeast Generation Company in Berlin on April 11, 2005.

(cxii) Trading Agreement and Order No. 8102 Modification No. 1 issued to The United Illuminating Company in New Haven on April 30, 1999.

(cxiii) Trading Agreement and Order No. 8153 issued to The United Illuminating Company in New Haven on April 30, 1999.

(cxiv) Trading Agreement and Order No. 8176 Modification No. 1 issued to

Wisvest-Connecticut, LLC in New Haven on March 12, 2001.

(cxv) Trading Agreement and Order No. 8240 issued to PSEG Power Connecticut, LLC in New Haven on February 13, 2003.

(cxvi) Trading Agreement and Order No. 8240 Modification No. 1 issued to PSEG Power Connecticut, LLC in New Haven on September 16, 2004.

(cxvii) Trading Agreement and Order No. 8220 issued to Bristol-Meyers Squibb Company in Wallingford on September 23, 2001.

(cxviii) Trading Agreement and Order No. 8220A issued to Bristol-Meyers Squibb Company in Wallingford on March 27, 2003.

(cxix) Trading Agreement and Order No. 8220A Modification No. 1 issued to Bristol-Meyers Squibb Company in Wallingford on May 5, 2005.

(cxx) Trading Agreement and Order No. 8124 issued to Stone Container Corporation in Uncasville on January 15, 2002.

(cxxi) Trading Agreement and Order No. 8124A issued to Stone Container Corporation in Uncasville on March 12, 2003.

(cxxii) Trading Agreement and Order No. 8120 issued to Sikorsky Aircraft Corporation in Stratford on April 5, 2002.

(cxxiii) Trading Agreement and Order No. 8120A issued to Sikorsky Aircraft Corporation in Stratford on March 27, 2003.

(cxxiv) Trading Agreement and Order No. 8137 Modification No. 1 issued to Alliedsignal, Inc. and U.S. Army Tank-Automotive and Armaments Command in Stratford on July 8, 1997.

(cxxv) Trading Agreement and Order No. 8137 Modification No. 2 issued to U.S. Army Tank-Automotive and Armaments Command in Stratford on April 29, 1999.

(cxxvi) Trading Agreement and Order No. 8137A issued to United States Army Stratford Army Engine Plant in Stratford on May 1, 2003.

(cxxvii) Trading Agreement and Order No. 8188 issued to Allegheny Ludlum Corporation in Wallingford on May 28, 2002.

(cxxviii) Trading Agreement and Order No. 8112 issued to US Navy Submarine Base New London in Groton on April 30, 1999.

(cxxix) Trading Agreement and Order No. 8112A issued to United States Naval Submarine Base in Groton on May 7, 2003.

(cxxx) Trading Agreement and Order No. 8112A, Modification No. 1 issued to United States Naval Submarine Base in Groton on April 25, 2005.

(cxxxi) Trading Agreement and Order No. 8201CC issued to US Naval Submarine Base New London in Groton on July 12, 2002.

(cxxxii) Trading Agreement and Order No. 8230 issued to Jacobs Vehicle Systems, Inc. in Bloomfield on November 21, 2002.

(cxxxiii) Trading Agreement and Order No. 8110 Modification No. 1 issued to Yale University in New Haven on April 29, 1999.

(cxxxiv) Trading Agreement and Order No. 8123 Modification No. 1 issued to Algonquin Gas Transmission Company in Cromwell on April 29, 1999.

(cxxxv) Trading Agreement and Order No. 8123A issued to Algonquin Gas Transmission Company in Cromwell on April 30, 2003.

(cxxxvi) Trading Agreement and Order No. 8250 issued to Algonquin Windsor Locks, LLC in Windsor Locks on August 27, 2003.

(cxxxvii) Trading Agreement and Order No. 8261 issued to Algonquin Windsor Locks, LLC in Windsor Locks on April 8, 2005.

(cxxxviii) Trading Agreement and Order No. 8249 issued to Capitol District Energy Center Cogeneration Associates in Hartford on September 29, 2003.

(cxxxix) Trading Agreement and Order No. 8249 Modification No. 1 issued to Capitol District Energy Center Cogeneration Associates in Hartford on April 11, 2005.

(cxl) Trading Agreement and Order No. 8094 Modification No. 1 issued to Ogden Martin Systems of Bristol, Inc. in Bristol on April 29, 1999.

(cxli) Trading Agreement and Order No. 8095 Modification No. 1 issued to American Ref-Fuel Company of Southeastern Connecticut in Preston on April 29, 1999.

(cxlii) Trading Agreement and Order No. 8100 Modification No. 1 issued to

Bridgeport Resco Company, Limited Partnership in Bridgeport on April 29, 1999.

(cxliii) Trading Agreement and Order No. 8101 Modification No. 1 issued to State of Connecticut Department of Mental Health and Addiction Services in Middletown on April 29, 1999.

(cxliv) Trading Agreement and Order No. 8111 Modification No. 1 issued to Uniroyal Chemical Company, Inc. in Naugatuck on April 29, 1999.

(cxlv) Trading Agreement and Order No. 8118 Modification No. 1 issued to South Norwalk Electric Works in South Norwalk on April 29, 1999.

(cxlvi) Trading Agreement and Order No. 8130 Modification No. 1 issued to Department of Public Works in Newton on April 29, 1999.

(cxlvii) Trading Agreement and Order No. 8132 Modification No. 1 issued to Bridgeport Hospital in Bridgeport on April 29, 1999.

(cxlviii) Trading Agreement and Order No. 8141 Modification No. 1 issued to The Town of Wallingford Department of Public Utilities in Wallingford on April 29, 1999.

(2) Revisions to the State Implementation Plan submitted by the Connecticut Department of Energy and Environmental Protection on November 15, 2011 and July 1, 2004. The revisions consist of 90 single source emission trading orders necessary for satisfying Reasonable Available Control Technology requirements for nitrogen oxides during specific time periods.

(i) Trading Agreement and Order No. 8093C, Modification No. 2 issued to Pfizer in Groton.

(ii) Trading Agreement and Order No. 8093C, Modification No. 3 issued to Pfizer in Groton.

(iii) Trading Agreement and Order No. 8136A, Modification No. 1 issued to Pfizer in Groton.

(iv) Trading Agreement and Order No. 8136A, Modification No. 2 issued to Pfizer in Groton.

(v) Trading Agreement and Order No. 8296 issued to Pfizer in Groton.

(vi) Trading Agreement and Order No. 8109, Modification No. 1 issued to Hamilton Sundstrand Corporation in Windsor Locks.

(vii) Trading Agreement and Order No. 8109, Modification No. 2 issued to Hamilton Sundstrand Corporation in Windsor Locks.

(viii) Trading Agreement and Order No. 8109, Modification No. 3 issued to Hamilton Sundstrand Corporation in Windsor Locks.

(ix) Trading Agreement and Order No. 8291 issued to Hamilton Sundstrand Corporation in Windsor Locks.

(x) Trading Agreement and Order No. 8291, Modification No. 1 issued to Hamilton Sundstrand Corporation in Windsor Locks.

(xi) Trading Agreement and Order No. 8114A, Modification No. 1 issued to Cytec Industries, Inc. in Wallingford.

(xii) Trading Agreement and Order No. 8114A, Modification No. 2 issued to Cytec Industries, Inc. in Wallingford.

(xiii) Trading Agreement and Order No. 8115B, Modification No. 1 issued to University of Connecticut in Storrs.

(xiv) Trading Agreement and Order No. 8115B, Modification No. 2 issued to University of Connecticut in Storrs.

(xv) Trading Agreement and Order No. 8115B, Modification No. 3 issued to University of Connecticut in Storrs.

(xvi) Trading Agreement and Order No. 8116B, Modification No. 1 issued to Connecticut Resources Recovery Authority in Hartford.

(xvii) Trading Agreement and Order No. 8116B, Modification No. 2 issued to Connecticut Resources Recovery Authority in Hartford.

(xviii) Trading Agreement and Order No. 8302 issued to Connecticut Resources Recovery Authority in Hartford.

(xix) Trading Agreement and Order No. 8119A, Modification No. 2 issued to City of Norwich, Department of Public Utilities in Norwich.

(xx) Trading Agreement and Order No. 8119A, Modification No. 3 issued to City of Norwich, Department of Public Utilities in Norwich.

(xxi) Trading Agreement and Order No. 8304 issued to City of Norwich, Department of Public Utilities in Norwich.

(xxii) Trading Agreement and Order No. 8120A, Modification No. 1 issued to Sikorsky Aircraft Corporation in Stratford.

(xxiii) Trading Agreement and Order No. 8120A, Modification No. 2 issued to

Sikorsky Aircraft Corporation in Stratford.

(xxiv) Trading Agreement and Order No. 8293 issued to Sikorsky Aircraft Corporation in Stratford.

(xxv) Trading Agreement and Order No. 8293, Modification No. 1 issued to Sikorsky Aircraft Corporation in Stratford.

(xxvi) Trading Agreement and Order No. 8123A, Modification No. 1 issued to Algonquin Gas Transmission Company in Cromwell.

(xxvii) Trading Agreement and Order No. 8123A, Modification No. 2 issued to Algonquin Gas Transmission Company in Cromwell.

(xxviii) Trading Agreement and Order No. 8134A, Modification No. 1 issued to United Technologies Corporation in East Hartford.

(xxix) Trading Agreement and Order No. 8134A, Modification No. 2 issued to United Technologies Corporation in East Hartford.

(xxx) Trading Agreement and Order No. 8289 issued to United Technologies Corporation in East Hartford.

(xxxi) Trading Agreement and Order No. 8154A, Modification No. 1 issued to Combustion Engineering, Inc. in Windsor.

(xxxii) Trading Agreement and Order No. 8154A, Modification No. 2 issued to Combustion Engineering, Inc. in Windsor.

(xxxiii) Trading Agreement and Order No. 8180A, Modification No. 2 issued to Connecticut Jet Power LLC in Branford, Greenwich, and Torrington.

(xxxiv) Trading Agreement and Order No. 8180A, Modification No. 3 issued to Connecticut Jet Power LLC in Branford, Greenwich, and Torrington.

(xxxv) Trading Agreement and Order No. 8181A, Modification No. 2 issued to Devon Power LLC in Milford.

(xxxvi) Trading Agreement and Order No. 8181A, Modification No. 3 issued to Devon Power LLC in Milford.

(xxxvii) Trading Agreement and Order No. 8219A, Modification No. 2 issued to Devon Power LLC in Milford.

(xxxviii) Trading Agreement and Order No. 8251A, Modification No. 2 issued to Devon Power LLC in Milford.

(xxxix) Trading Agreement and Order No. 8251A, Modification No. 3 issued to Devon Power LLC in Milford.

(xl) Trading Agreement and Order No. 8182A, Modification No. 2 issued to Middleton Power LLC in Middleton.

(xli) Trading Agreement and Order No. 8182A, Modification No. 3 issued to Middleton Power LLC in Middleton.

(xlii) Trading Agreement and Order No. 8213A, Modification No. 2 issued to Middleton Power LLC in Middleton.

(xliii) Trading Agreement and Order No. 8213A, Modification No. 3 issued to Middleton Power LLC in Middleton.

(xliv) Trading Agreement and Order No. 8214A, Modification No. 2 issued to Middleton Power LLC in Middleton.

(xlv) Trading Agreement and Order No. 8214A, Modification No. 3 issued to Middleton Power LLC in Middleton.

(xlvi) Trading Agreement and Order No. 8215A, Modification No. 2 issued to Middleton Power LLC in Middleton.

(xlvii) Trading Agreement and Order No. 8215A, Modification No. 3 issued to Middleton Power LLC in Middleton.

(xlviii) Trading Agreement and Order No. 8183A, Modification No. 2 issued to Montville Power LLC in Montville.

(xlix) Trading Agreement and Order No. 8183A, Modification No. 3 issued to Montville Power LLC in Montville.

(l) Trading Agreement and Order No. 8216A, Modification No. 2 issued to Montville Power LLC in Montville.

(li) Trading Agreement and Order No. 8216A, Modification No. 3 issued to Montville Power LLC in Montville.

(lii) Trading Agreement and Order No. 8217A, Modification No. 2 issued to Montville Power LLC in Montville.

(liii) Trading Agreement and Order No. 8217A, Modification No. 3 issued to Montville Power LLC in Montville.

(liv) Trading Agreement and Order No. 8184A, Modification No. 2 issued to Norwalk Power LLC in Norwalk.

(lv) Trading Agreement and Order No. 8184A, Modification No. 3 issued to Norwalk Power LLC in Norwalk.

(lvi) Trading Agreement and Order No. 8218A, Modification No. 2 issued to Norwalk Power LLC in Norwalk.

(lvii) Trading Agreement and Order No. 8218A, Modification No. 3 issued to Norwalk Power LLC in Norwalk.

(lviii) Trading Agreement and Order No. 8221A, Modification No. 1 issued to Dominion Nuclear Connecticut, Inc. in Waterford.

(lix) Trading Agreement and Order No. 8221A, Modification No. 2 issued to Dominion Nuclear Connecticut, Inc. in Waterford.

(lx) Trading Agreement and Order No. 8222A, Modification No. 1 issued to Dominion Nuclear Connecticut, Inc. in Waterford.

(lxi) Trading Agreement and Order No. 8222A, Modification No. 2 issued to Dominion Nuclear Connecticut, Inc. in Waterford.

(lxii) Trading Agreement and Order No. 8288 issued to Dominion Nuclear Connecticut, Inc. in Waterford.

(lxiii) Trading Agreement and Order No. 8288, Modification No. 1 issued to Dominion Nuclear Connecticut, Inc. in Waterford.

(lxiv) Trading Agreement and Order No. 8240, Modification No. 2 issued to PSEG Power Connecticut LLC in New Haven.

(lxv) Trading Agreement and Order No. 8240, Modification No. 3 issued to PSEG Power Connecticut LLC in New Haven.

(lxvi) Trading Agreement and Order No. 8243, Modification No. 1 issued to PSEG Power Connecticut LLC in New Haven.

(lxvii) Trading Agreement and Order No. 8243, Modification No. 2 issued to PSEG Power Connecticut LLC in New Haven.

(lxviii) Trading Agreement and Order No. 8241, Modification No. 2 issued to PSEG Power Connecticut LLC in Bridgeport.

(lxix) Trading Agreement and Order No. 8241, Modification No. 3 issued to PSEG Power Connecticut LLC in Bridgeport.

(lxx) Trading Agreement and Order No. 8244, Modification No. 2 issued to PSEG Power Connecticut LLC in Bridgeport.

(lxxi) Trading Agreement and Order No. 8244, Modification No. 3 issued to PSEG Power Connecticut LLC in Bridgeport.

(lxxii) Trading Agreement and Order No. 8253, Modification No. 2 issued to PSEG Power Connecticut LLC in Bridgeport.

(lxxiii) Trading Agreement and Order No. 8253, Modification No. 3 issued to PSEG Power Connecticut LLC in Bridgeport.

(lxxiv) Trading Agreement and Order No. 8301 issued to PSEG Power LLC, PSEG Fossil LLC, and PSEG Power Connecticut LLC in Bridgeport.

(lxxv) Trading Agreement and Order No. 8305 issued to PSEG Power LLC, PSEG Fossil LLC, and PSEG Power Connecticut LLC in New Haven and Bridgeport.

(lxxvi) Trading Agreement and Order No. 8249, Modification No. 2 issued to Capitol District Energy Center Cogeneration Associates in Hartford.

(lxxvii) Trading Agreement and Order No. 8249, Modification No. 3 issued to Capitol District Energy Center Cogeneration Associates in Hartford.

(lxxviii) Trading Agreement and Order No. 8298 issued to Capitol District Energy Center Cogeneration Associates in Hartford.

(lxxix) Trading Agreement and Order No. 8261, Modification No. 1 issued to Algonquin Power Windsor Locks LLC in Windsor Locks.

(lxxx) Trading Agreement and Order No. 8261, Modification No. 2 issued to Algonquin Power Windsor Locks LLC in Windsor Locks.

(lxxxi) Trading Agreement and Order No. 8299 issued to Algonquin Power Windsor Locks LLC in Windsor Locks.

(lxxxii) Trading Agreement and Order No. 8269 issued to Cascades Boxboard Group Connecticut LLC in Versailles.

(lxxxiii) Trading Agreement and Order No. 8269, Modification No. 1 issued to Cascades Boxboard Group Connecticut LLC in Versailles.

(lxxxiv) Trading Agreement and Order No. 8297 issued to Cascades Boxboard Group Connecticut LLC in Versailles.

(lxxxv) Trading Agreement and Order No. 8272 issued to NE Hydro Generating Company in Preston.

(lxxxvi) Trading Agreement and Order No. 8279 issued to First Light Hydro Generating Company in Preston.

(lxxxvii) Trading Agreement and Order No. 8303 issued to First Light Hydro Generating Company in Preston.

(lxxxviii) Trading Agreement and Order No. 8300 issued to NRG Energy, Inc., Middletown Power LLC, NRG Middletown Operations Inc., Montville Power LLC, NRG Montville Operations

Inc., Norwalk Power LLC, NRG Norwalk Harbor Operations Inc., and Connecticut Jet Power LLC in Branford, Greenwich, Torrington, Middletown, Norwalk, Milford, and Montville.

(lxxxix) Trading Agreement and Order No. 8306 issued to NRG Energy, Inc., Middletown Power LLC, NRG Middletown Operations Inc., Montville Power LLC, NRG Montville Operations Inc., Norwalk Power LLC, and NRG Norwalk Harbor Operations Inc. in Middletown, Montville, and Norwalk.

(xc) Trading Agreement and Order No. 8110A issued to Yale University in New Haven.

(n) Approval—An attainment demonstration for the 1997 8-hour ozone standard to satisfy requirements of section 182(c)(2)(A) of the Clean Air Act, and a Reasonably Available Control Measure (RACM) analysis to satisfy requirements of section 172(c)(1) of the Clean Air Act for the Greater Connecticut ozone nonattainment area, submitted by the Connecticut Department of Energy and Environmental Protection on February 1, 2008.

(o) Revisions to the State Implementation Plan submitted by the Connecticut Department of Environmental Protection on February 1, 2008. These revisions are for the purpose of satisfying the rate of progress requirement of section 182(b)(1) from 2002 through 2008, and the contingency measure requirement of sections 172(c)(9) and of the Clean Air Act, for the Greater Connecticut moderate 8-hour ozone nonattainment area, and the Connecticut portion of the New York-New Jersey-Long Island moderate 8-hour ozone nonattainment area. These revisions establish motor vehicle emission budgets for 2008 of 29.7 tons per day of volatile organic compounds (VOCs) and 60.5 tons per day of nitrogen oxides (NOx) to be used in transportation conformity in the Connecticut portion of the New York-New Jersey-Long Island moderate 8-hour ozone nonattainment area. These revisions also establish motor vehicle emission budgets for 2008 for the Greater Connecticut moderate 8-hour ozone nonattainment area of 28.5 tons per day for VOCs, and 54.3 tons per day for NOx.

(p) *Rescission of clean data determination for the 1997 eight-hour ozone standard.* Effective June 3, 2016, the EPA is determining that complete quality-assured and certified ozone monitoring data for 2012–2014 show the NY-NJ-CT 1997 eight-hour ozone nonattainment area did not meet 1997 eight-hour ozone standard. Therefore, the EPA is rescinding the clean data determination for the 1997 eight-hour ozone standard only. The prior determination (*see* paragraph k of this section) is in accordance with 40 CFR 51.918. The prior determination suspended the requirements for this area to submit an attainment demonstration, associated reasonably available control measures, a reasonable further progress plan, contingency measures, and other planning SIPs related to attainment of the standard for as long as this area continues to meet the 1997 annual eight-hour ozone NAAQS. This rescission of the clean data determination will result in a SIP Call for a new ozone attainment demonstration, associated reasonably available control measures, a reasonable further progress plan, contingency measures, and other planning SIPs related to attainment of the standard, for this area only. If the revised plan is approved by the EPA as demonstrating reasonable further progress and attainment for the more stringent 2008 NAAQS by the Moderate area attainment date, and is approved by the EPA as containing adequate contingency measures for the 2008 NAAQS, then the plan would be deemed to have also satisfied requirements of the SIP Call associated with violations for the 1997 NAAQS.

(q) Approval—Revisions to the Connecticut State Implementation Plan (SIP) submitted on July 18, 2014. The SIP revision satisfies the requirement to implement reasonably available control technology (RACT) for sources of volatile organic compounds (VOC) and oxides of nitrogen (NO_X) for purposes of the 2008 ozone standard. Specifically, the following sections of the Regulations of Connecticut State Agencies are approved for this purpose: For VOC RACT, 22a–174–20, Control of Organic Compound Emissions, 22a–174–30, Dispensing of Gasoline/Stage I and Stage II Vapor Recovery, and 22a–174–32, RACT for Organic Compounds; for NO_X RACT, 22a–174–22, Control of nitrogen

oxide emissions, 22a–174–22e, Control of nitrogen oxide emissions from fuel burning equipment at major sources, 22a–174–22f, High daily NO_X emitting units at non-major sources of nitrogen oxides, and 22a–174–38, Municipal Waste Combustors.

(r) *Approval*—Submittal from the Connecticut Department of Energy and Environmental Protection dated March 9, 2017, to address the nonattainment new source review requirements for the 2008 8-hour ozone NAAQS for the Greater Connecticut and the New York-N. New Jersey-Long Island, NY–NJ–CT ozone nonattainment areas, as it meets the requirements for both the State's marginal and moderate classifications.

[65 FR 62626, Oct. 19, 2000, as amended at 66 FR 663, Jan. 3, 2001; 66 FR 63938, Dec. 11, 2001; 69 FR 5288, Feb. 4, 2004; 71 FR 51765, Aug. 31, 2006; 75 FR 53220, Aug. 31, 2010; 76 FR 40256, July 8, 2011; 77 FR 15608, Mar. 16, 2012; 77 FR 36169, June 18, 2012; 78 FR 38591, June 27, 2013; 78 FR 54964, Sept. 9, 2013; 78 FR 78274, Dec. 26, 2013; 79 FR 20099, Apr. 11, 2014; 81 FR 26708, May 4, 2016; 81 FR 62379, Sept. 9, 2016; 82 FR 35456, July 31, 2017; 83 FR 6970, Feb. 16, 2018]

§ 52.378 Control strategy: PM_{10}.

(a) Approval—On June 23, 2005, the Connecticut Department of Environmental Protection submitted a request to redesignate the City of New Haven PM_{10} nonattainment area to attainment for PM_{10}. The redesignation request and the initial ten-year maintenance plan (2006–2015) meet the redesignation requirements in sections 107(d)(3)(E) and 175A of the Act as amended in 1990, respectively.

(b) Approval—On June 23, 2005, the Connecticut Department of Environmental Protection (CT DEP) submitted a request to establish a Limited Maintenance Plan (LMP) for the City of New Haven PM_{10} attainment area for the area's initial ten-year maintenance plan (2006–2015). The State of Connecticut has committed to: maintain a PM_{10} monitoring network in the New Haven PM_{10} maintenance area; implement contingency measures in the event of an exceedance of the PM_{10} National Ambient Air Quality Standards (NAAQS) in the maintenance area; coordinate with EPA in the event the PM_{10} design value in the maintenance area exceeds 98 μgm/m^3 for the 24-hour PM_{10} NAAQS or 40 μgm/m^3 for the annual PM_{10} NAAQS; and to verify the validity of the data and, if warranted based on the data review, develop a full maintenance plan for the maintenance area. The LMP satisfies all applicable requirements of section 175A of the Clean Air Act. Approval of the LMP is conditioned on maintaining levels of ambient PM_{10} below a PM_{10} design value criteria of 98 μgm/m^3 for the 24-hour PM_{10} NAAQS and 40 μgm/m^3 for the annual PM_{10} NAAQS. For the Criscuolo Park site, Connecticut still qualifies for the LMP option if, based on five years of site data, the average design values (ADVs) of the continuous PM_{10} monitor are less than the site-specific critical design value (CDV). If the LMP criteria are no longer satisfied, Connecticut must develop a full maintenance plan to meet Clean Air Act requirements.

[70 FR 59663, Oct. 13, 2005]

§ 52.379 Control strategy: $PM_{2.5}$.

(a) Approval—Revision to the State Implementation Plan submitted by the Connecticut Department of Environmental Protection (DEP) on April 17, 2007. the revision is for the purpose of establishing early fine particulate ($PM_{2.5}$) transportation conformity emission budgets for the Connecticut portion of the New York–Northern New Jersey–Long Island, NY-NJ-CT $PM_{2.5}$ nonattainment area. The April 17, 2007 revision establishes $PM_{2.5}$ motor vehicle emission budgets for 2009 of 360 tons per year of direct $PM_{2.5}$ emissions and 18,279 tons per year of NO_X emissions to be used in transportation conformity in the Connecticut portion of the New York-Northern New Jersey-Long Island, NY-NJ-CT $PM_{2.5}$ nonattainment area.

(b) *Determination of Attainment.* EPA has determined, as of December 15, 2010, that the New York-Northern New Jersey-Long Island, NY-NJ-CT fine particle ($PM_{2.5}$) nonattainment area has attained the 1997 $PM_{2.5}$ National Ambient Air Quality Standard. This determination, in accordance with 40 CFR 51.1004(c), suspends the requirements for this area to submit an attainment demonstration, associated reasonably available control measures, a reasonable further progress plan, contingency measures, and other planning

SIPs related to attainment of the standard for as long as the area continues to attain the 1997 $PM_{2.5}$ NAAQS.

(c) Approval—Submittal from the Connecticut Department of Environmental Protection, dated September 4, 2008, to address the Clean Air Act (CAA) infrastructure requirements for the 1997 $PM_{2.5}$ National Ambient Air Quality Standard (NAAQS). This submittal is approved as meeting the requirements of sections 110(a)(2)(B), (C) (enforcement program only), (E)(i), (E)(iii), (F), (G), (H), (J) (consultation and public notification only), (K), (L), and (M).

(d) Conditional Approval—Submittal from the Connecticut Department of Environmental Protection, dated September 4, 2008, to address the Clean Air Act (CAA) infrastructure requirements for the 1997 $PM_{2.5}$ National Ambient Air Quality Standard (NAAQS). EPA is conditionally approving Connecticut's submittal with respect to CAA sections 110(a)(2)(A), (C) only as it related to the PSD program, (D)(ii), (E)(ii), and (J) only as it relates to the PSD program. This conditional approval is contingent upon Connecticut taking actions to meet requirements of these elements within one year of conditional approval, as committed to in letters from the state to EPA Region 1 dated June 15, 2012, and July 11, 2012.

(e) Approval—Submittal from the Connecticut Department of Environmental Protection, dated September 18, 2009, with supplements submitted on January 7, 2011, and August 19, 2011, to address the Clean Air Act (CAA) infrastructure requirements for the 2006 $PM_{2.5}$ National Ambient Air Quality Standard (NAAQS). This submittal is approved as meeting the requirements of sections 110(a)(2)(B), (C) (enforcement program only), (E)(i), (E)(iii), (F), (G), (H), (J) (consultation and public notification only), (K), (L), and (M).

(f) Conditional Approval—Submittal from the Connecticut Department of Environmental Protection, dated September 18, 2009, with supplements submitted on January 7, 2011, and August 19, 2011, to address the Clean Air Act (CAA) infrastructure requirements for the 2006 $PM_{2.5}$ National Ambient Air Quality Standard (NAAQS). EPA is conditionally approving Connecticut's submittal with respect to CAA sections 110(a)(2)(A), (C) only as it related to the PSD program, (D)(ii), (E)(ii), and (J) only as it relates to the PSD program. This conditional approval is contingent upon Connecticut taking actions to meet requirements of these elements within one year of conditional approval, as committed to in letters from the state to EPA Region 1 dated June 15, 2012, and July 11, 2012.

(g) *Determination of Attainment.* EPA has determined, as of December 31, 2012, that the New York-N. New Jersey-Long Island, NY-NJ-CT fine particle ($PM_{2.5}$) nonattainment area has attained the 2006 $PM_{2.5}$ National Ambient Air Quality Standard. This determination suspends the requirements for this area to submit an attainment demonstration, associated reasonably available control measures, a reasonable further progress plan, contingency measures, and other planning SIPs related to attainment of the standard for as long as the area continues to attain the 2006 $PM_{2.5}$ NAAQS.

(h) Approval—EPA is approving a request to redesignate the Connecticut portion of the New York-N. New Jersey-Long Island, NY-NJ-CT fine particle ($PM_{2.5}$) area (i.e., New Haven and Fairfield Counties or the Southwestern CT Area) from nonattainment to attainment for the 1997 annual and 2006 24-hour $PM_{2.5}$ standards. Connecticut submitted this request on June 22, 2012. As part of the redesignation request, the State submitted a maintenance plan as required by section 175A of the Clean Air Act. Elements of the section 175A maintenance plan include a contingency plan and an obligation to submit a subsequent maintenance plan revision as required by the Clean Air Act. The $PM_{2.5}$ maintenance plan also establishes 2017 and 2025 Motor Vehicle Emission Budgets (MVEBs) for the Area. Connecticut is establishing 2017 MVEBs of 575.8 tons per year (tpy) for direct $PM_{2.5}$ and 12,791.8 tpy for NO_X, and 2025 MVEBs of 516 tpy for direct $PM_{2.5}$ and 9,728.1 tpy for NO_X, for the Southwestern CT Area for maintenance of the 1997 annual and 2006 24-hour $PM_{2.5}$ standards. The 2017 and 2025 MVEBs were prepared with the MOVES model. Previously SIP-approved 2009 MVEBs prepared with MOBILE6.2 are

being withdrawn. Finally, EPA is also approving a comprehensive 2007 emission inventory for this Area.

[72 FR 50063, Aug. 30, 2007, as amended at 75 FR 69577, Nov. 15, 2010; 77 FR 63232, Oct. 16, 2012; 77 FR 76871, Dec. 31, 2012; 78 FR 58469, Sept. 24, 2013]

§ 52.380 Rules and regulations.

(a) All facilities owned, operated or under contract with the Connecticut Transportation Authority shall comply in all respects with Connecticut Regulations for the Abatement of Air Pollution sections 19–508–1 through 19–508–25 inclusive, as approved by the Administrator.

(b) For the purposes of paragraph (a) of this section the word ''Administrator'' shall be substituted for the word ''Commissioner'' wherever that word appears in Connecticut Regulations for the Abatement of Air Pollution sections 19–508–1 through 19–508–25 inclusive, as approved by the Administrator.

(c) The June 27 and December 28, 1979, February 1, May 1, September 8 and November 12, 1980, revisions are approved as satisfying Part D requirements under the following conditions:

(1)–(2) [Reserved]

(d) Non-Part D-No Action: EPA is neither approving nor disapproving the following elements of the revisions:

(1)–(2) [Reserved]

(3) The program to review new and modified major stationary sources in attainment areas (prevention of significant deterioration).

(4) Permit fees

(5) Stack height regulations

(6) Interstate pollution requirements

(7) Monitoring requirements

(8) Conflict of interest provisions.

(9) Use of 1 percent sulfur content fuel by the following residual oil burning sources, identified under § 52.370, paragraph (c)(18).

(i) Northeast Utilities, HELCO Power Station in Middletown,

(10) Emergency Fuel Variance provisions of Regulation 19–508–19 (a)(2)(ii) identified under § 52.370 paragraph (c)(18).

(e) *Disapprovals.* (1) Regulation 19–508–19(a)(9) concerning coal use at educational and historical exhibits and demonstrations, identified under § 52.370, (c)(18).

(2) Regulation 19–508–19, subsection (a)(4)(iii)(C) and (a)(4)(iii)(E) concerning fuel merchants, identified under § 52.370, paragraph (c)(18).

Note 1 to paragraphs (f) through (h): ''state'' means the state of Connecticut.

(f) *Connecticut General Statutes Section 1–85. (Formerly Sec. 1–68). Interest in conflict with discharge of duties:* A public official, including an elected state official, or state employee has an interest which is in substantial conflict with the proper discharge of his duties or employment in the public interest and of his responsibilities as prescribed in the laws of this state, if he has reason to believe or expect that he, his spouse, a dependent child, or a business with which he is associated will derive a direct monetary gain or suffer a direct monetary loss, as the case may be, by reason of his official activity. A public official, including an elected state official, or state employee does not have an interest which is in substantial conflict with the proper discharge of his duties in the public interest and of his responsibilities as prescribed by the laws of this state, if any benefit or detriment accrues to him, his spouse, a dependent child, or a business with which he, his spouse or such dependent child is associated as a member of a profession, occupation or group to no greater extent than any other member of such profession, occupation or group. A public official, including an elected state official or state employee who has a substantial conflict may not take official action on the matter.

(g) *Connecticut General Statutes Section 22a–171. (Formerly Sec. 19–507). Duties of Commissioner of Energy and Environmental Protection:* The Commissioner of Energy and Environmental Protection of the State of Connecticut shall:

(1) Initiate and supervise programs for the purposes of determining the causes, effect and hazards of air pollution;

(2) Initiate and supervise state-wide programs of air pollution control education;

(3) Cooperate with and receive money from the Federal Government and, with the approval of the Governor,

from any other public or private source;

(4) Adopt, amend, repeal and enforce regulations as provided in Connecticut General Statutes Section 22a–174 and do any other act necessary to enforce the provisions of Connecticut General Statutes Chapter 446c and Connecticut General Statutes Section 14–164c;

(5) Advise and consult with agencies of the United States, agencies of the state, political subdivisions and industries and any other affected groups in furtherance of the purposes of Connecticut General Statutes Chapter 446c.

(h) *Connecticut General Statutes Section 16a–21a. Sulfur content of home heating oil and off-road diesel fuel. Suspension of requirements for emergency.* (1)(i) The amount of sulfur content of the following fuels sold, offered for sale, distributed or used in this state shall not exceed the following percentages by weight:

(A) For number two heating oil, three-tenths of one per cent; and

(B) For number two off-road diesel fuel, three-tenths of one per cent.

(ii) Notwithstanding paragraph (h)(1)(i) of this section, the amount of sulfur content of number two heating oil sold, offered for sale, distributed or used in this state shall not exceed the following percentages by weight:

(A) For the period beginning July 1, 2011, and ending June 30, 2014, fifty parts per million; and

(B) On and after July 1, 2014, fifteen parts per million.

(iii) The provisions of paragraph (h)(1)(ii) of this section shall not take effect until the states of New York, Massachusetts and Rhode Island each have adopted requirements that are substantially similar to the provisions of said paragraph (h)(1)(ii).

(2) As of the date on which the last of the states of New York, Massachusetts and Rhode Island limits the sulfur content of number two heating oil to one thousand five hundred parts per million, the sulfur content of number two heating oil sold, offered for sale, distributed or used in this state shall not exceed one thousand five hundred parts per million.

(3) As of the date on which the last of the states of New York, Massachusetts and Rhode Island limits the sulfur content of number two heating oil to one thousand two hundred fifty parts per million, the sulfur content of number two heating oil sold, offered for sale, distributed or used in this state shall not exceed one thousand two hundred fifty parts per million.

(4) As of the date on which the last of the states of New York, Massachusetts and Rhode Island limits the sulfur content of number two heating oil to five hundred parts per million, the sulfur content of number two heating oil sold, offered for sale, distributed or used in this state shall not exceed five hundred parts per million.

(5) As of the date on which the last of the states of New York, Massachusetts and Rhode Island limits the sulfur content of number two off-road diesel fuel to five hundred parts per million, the sulfur content of number two off-road diesel fuel offered for sale, distributed or used in this state shall not exceed five hundred parts per million.

(6) The Commissioner of Energy and Environmental Protection of the State of Connecticut may suspend the requirements of subsections (a) to (e), inclusive, of this Connecticut General Statutes Section 16a–21a if the commissioner finds that the physical availability of fuel which complies with such requirements is inadequate to meet the needs of residential, commercial or industrial users in this state and that such inadequate physical availability constitutes an emergency provided the commissioner shall specify in writing the period of time such suspension shall be in effect.

Note 2 to paragraph (h): EPA has replaced the original structure of the CT statute with the structure of the CFR and uses ''paragraph'' instead of the original statutory language of ''subsection'' and ''subdivision.'' EPA has also replaced the (a)-level of the original statute with the (1)-level in the CFR and the (1)-level in the original statute with the (i)-level in the CFR.

[40 FR 23280, May 29, 1975, as amended at 45 FR 84787, Dec. 23, 1980; 46 FR 34801, July 6, 1981; 46 FR 56615, Nov. 18, 1981; 46 FR 62062, Dec. 22, 1981; 47 FR 763, Jan. 7, 1982; 47 FR 36823, Aug. 24, 1982; 47 FR 41959, Sept. 23, 1982; 47 FR 49646, Nov. 2, 1982; 47 FR 51129, Nov. 12, 1982; 48 FR 5724, Feb. 8, 1983; 50 FR 50907, Dec. 13, 1985; 65 FR 62623, Oct. 19, 2000; 81 FR 35639, June 3, 2016]

§ 52.381 Requirements for state implementation plan revisions relating to new motor vehicles.

Connecticut must comply with the requirements of § 51.120.

[60 FR 4737, Jan. 24, 1995]

§ 52.382 Significant deterioration of air quality.

(a) The requirements of sections 160 through 165 of the Clean Air Act are not met, since the plan does not include approvable provisions for the NO_2 increments under the prevention of significant deterioration program.

(b) The increments for nitrogen dioxide promulgated on October 17, 1988 (53 FR 40671), and related requirements in 40 CFR 52.21 except paragraph (a)(1), are hereby incorporated and made part of the applicable implementation plan for the State of Connecticut.

[58 FR 10964, Feb. 23, 1993, as amended at 68 FR 11322, Mar. 10, 2003; 68 FR 74488, Dec. 24, 2003]

§ 52.383 Stack height review.

The State of Connecticut has declared to the satisfaction of EPA that no existing emission limitations have been affected by stack height credits greater than good engineering practice or any other prohibited dispersion techniques as defined on EPA's stack height regulations as revised on July 8, 1985. Such declarations were submitted to EPA on February 21, 1986, and May 27, 1986.

[52 FR 49407, Dec. 31, 1987]

§ 52.384 Emission inventories.

(a) The Governor's designee for the State of Connecticut submitted the 1990 base year emission inventories for the Connecticut portion of the New York-New Jersey-Connecticut severe ozone nonattainment area and the Greater Hartford serious ozone nonattainment area on January 13, 1994 as revisions to the State's SIP. Revisions to the inventories were submitted on February 3, 1994, February 16, 1995, and December 30, 1997. The 1990 base year emission inventory requirement of section 182(a)(1) of the Clean Air Act, as amended in 1990, has been satisfied for these areas.

(b) The inventories are for the ozone precursors which are volatile organic compounds, nitrogen oxides, and carbon monoxide. The inventories covers point, area, non-road mobile, on-road mobile, and biogenic sources.

(c) Taken together, the Connecticut portion of the New York-New Jersey-Connecticut severe nonattainment area and the Hartford serious nonattainment area encompass the entire geographic area of the State.

(d) The state of Connecticut submitted base year emission inventories representing emissions for calendar year 2002 from the Connecticut portion of the NY-NJ-CT moderate 8-hour ozone nonattainment area and the Greater Connecticut moderate 8-hour ozone nonattainment area on February 1, 2008 as revisions to the State's SIP. The 2002 base year emission inventory requirement of section 182(a)(1) of the Clean Air Act, as amended in 1990, has been satisfied for these areas. The inventories consist of emission estimates of volatile organic compounds and nitrogen oxides, and cover point, area, non-road mobile, on-road mobile and biogenic sources. The inventories were submitted as revisions to the SIP in partial fulfillment of obligations for nonattainment areas under EPA's 1997 8-hour ozone standard.

[62 FR 55340, Oct. 24, 1997, as amended at 65 FR 62626, Oct. 19, 2000; 77 FR 50600, Aug. 22, 2012]

§ 52.385 EPA-approved Connecticut regulations.

The following table identifies the State regulations which have been submitted to and approved by EPA as revisions to the Connecticut State Implementation Plan. This table is for informational purposes only and does not have any independent regulatory effect. To determine regulatory requirements for a specific situation, consult the plan identified in § 52.370. To the extent that this table conflicts with § 52.370, § 52.370 governs.

TABLE 52.385—EPA-APPROVED REGULATIONS

Connecticut State citation	Title/subject	Dates		FEDERAL REGISTER citation	Section 52.370	Comments/description
		Date adopted by State	Date approved by EPA			
19–508	Connecticut Air Implementation Plan.	3/3/72	5/31/72	37 FR 10842	(c) 1&2	State of CT Air Implementation Plan.
		8/10/72	5/14/73	38 FR 12696	(c) 3	Correction to submission dates for supplemental information.
		4/9/74	6/2/75	40 FR 23746	(c) 5	Identification of Air Quality Maintenance Areas.
		8/10/76	11/29/77	42 FR 60753	(c) 7	Adds carbon monoxide/oxidant control strategy and regulations.
		6/30/77	9/29/78	43 FR 44840	(c) 8	Describes air quality surveillance program.
22a–171	Small Business Assistance.	1/12/93	5/19/94	59 FR 26123	(c) 65	Established small business compliance and technical assistance program.
22a–174–1	Definitions	03/15/02	02/27/03	68 FR 9011	Adopting definitions applicable to PSD/NSR program..	
22a–174–1	Definitions	04/07/14	06/24/15	80 FR 36242	(c)(106)	Amendment of subdivisions (10) ambient air quality standard and (88) PM 10.
22a–174–1	Definitions	9/10/12	7/24/2015	80 FR 43960	(c)(108)	Modified definition of ''major source baseline date'' for purposes of adding $PM_{2.5}$.
22a–174–1	Definitions	2/1/10	9/1/16	81 FR 60274	(c)(113)	Approved 22a–174–1(19) definition of ''brush'' for purposes of Connecticut General Statutes (CGS) Section 22a–174(f); see paragraph (c)(113)(A) of this section.
22a–174–2	Registration requirements for existing stationary sources of air pollutants.	4/04/72	5/31/72	37 FR 23085	(b).	
		8/31/79	12/23/80	45 FR 84769	(c) 11	In tandem with changes to Regulation 3, sources existing prior to 1972 must register.
22a–174–2a	Procedural Requirements for New Source Review and Title V Permitting.	03/15/02	02/27/03	68 FR 9011	Provisions applicable to PSD/NSR in consolidated permit procedural requirements..	

TABLE 52.385—EPA-APPROVED REGULATIONS—Continued

Connecticut State citation	Title/subject	Dates		FEDERAL REGISTER citation	Section 52.370	Comments/description
		Date adopted by State	Date approved by EPA			
22a–174–2a	Procedural Requirements for New Source Review and Title V Permitting.	9/10/2012	7/24/2015	80 FR 43960 ...	(c)(107)	Only sections 22a–174–2a(b)(5)(E) and (b)(6) are being approved.
22a–174–3	Permits for construction and operation of stationary sources.	4/04/72	5/31/72	37 FR 23085 ...	(b)	Conditional approval of NSR program.
		8/30/79	12/23/80	45 FR 84769 ...	(c)11	EPA conditionally approved changes to meet federal New Source Review (NSR) requirements. CT did not submit Prevention of Significant Determination program.
		8/31/79	1/07/82	47 FR 762	(c) 20	Final approval of NSR Rules removing conditions of 12/23/80.
		10/10/80	1/07/82	47 FR 762	(c) 20	Allows conditional exemption of resource recovery facilities from offset transactions.
		10/10/80	1/07/82	47 FR 762	(c) 20	Replaces the word ''actual'' with word ''allowable''.
		12/27/88	2/23/93	58 FR 10957 ...	(c) 56	Changes to NSR and PSD requirements.
22a–174–3a	Permit to Construct and Operate Stationary Sources.	03/15/02	02/27/03	68 FR 9011	PSD/NSR program requirements as revised by the CAAA..	
22a–174–3a	Permit to Construct and Operate Stationary Sources.	04/07/14	06/24/15	80 FR 36242 ...	(c)(106)	Amendment of subsection (k)(5) Ambient Monitoring.
22a–174–3a	Permit to Construct and Operate Stationary Sources.	9/10/2012	7/24/2015	80 FR 43960 ...	(c)(108)	Added Ambient Impact values for $PM_{2.5}$ in Table 3a(i)–1, Significant Emission Rate Thresholds for $PM_{2.5}$ emissions and its precursors in Table 3a(k)–1, $PM_{2.5}$ increment added to Table 3a(k)–2, and $PM_{2.5}$ added to section 22a–174–3a(*l*)(4)(B)(iv). Revised section 22a–174–3a(*l*)(1).

TABLE 52.385—EPA-APPROVED REGULATIONS—Continued

Connecticut State citation	Title/subject	Dates		FEDERAL REGISTER citation	Section 52.370	Comments/description
		Date adopted by State	Date approved by EPA			
22a–174–3b	Permits for construction and operation of stationary sources.	4/4/06	8/31/06	71 FR 51761 ...	(c)(95)	Only the automotive refinishing requirements of 22a–174–3b are being approved. Connecticut did not submit the other subsections of the rule as part of its SIP revision.
22a–174–4	Source monitoring, record keeping, reporting and authorization of inspection of air pollution sources.	4/04/72	5/31/72	37 FR 23085 ...	(b).	
		10/31/77	12/23/80	45 FR 84769 ...	(c) 11	Clarifies record keeping and reporting requirements and rescinds smoke monitoring requirements for small sources.
		12/15/80	8/24/82	47 FR 36822 ...	(c) 20	Rescinded requirements for smoke monitors on sources less than 250 mmBtu.
		12/27/88	2/23/93	58 FR 10957 ...	(c) 56	Changes to opacity continuous emission monitoring (CEM) requirements.
22a–174–4	Source monitoring, recordkeeping and reporting.	4/1/04	7/16/14	79 FR 41427 ...	(c)(104)	
22a–174–5	Methods for sampling, emission testing, and reporting.	4/04/72	5/31/72	37 FR 23085 ...	(b).	
		10/05/77	12/23/80	45 FR 84769 ...	(c) 11	Tied State testing method requirement to federal requirements, clarified requirements for stack testing, and eliminated record keeping and reporting requirements.
		12/19/80	8/28/81	46 FR 43418 ...	(c) 16	Revisions to source monitoring and stack testing requirements for SO2.
22a–174–5	Methods for sampling, emission testing, sample analysis and reporting	4/15/14	5/25/16	81 FR 33134	(c)(111)	Revision to section 22a–174–5(b)(1).
22a–174–6	Air Pollution Emergency Episode Procedures.	4/04/72	5/31/72	37 FR 23085 ...	(b).	

TABLE 52.385—EPA-APPROVED REGULATIONS—Continued

Connecticut State citation	Title/subject	Dates		FEDERAL REGISTER citation	Section 52.370	Comments/description
		Date adopted by State	Date approved by EPA			
		8/31/79	12/23/80	45 FR 84769 ...	(c) 11	Allows DEP to separately limit mobile and stationary sources depending upon the cause of the episode.
22a–174–7	Malfunction of Control Equipment; Reporting.	4/04/72	5/31/72	37 FR 23085 ...	(b).	
22a–174–7	Air pollution control equipment and monitoring equipment operation.	4/1/04	7/16/14	79 FR 41427 ...	(c)(104)	
22a–174–8	Compliance Plans and Schedules.	4/04/72	5/31/72	37 FR 23085 ...	(b).	
22a–174–8	Compliance Plans and Schedules.	12/22/2016	7/31/2017	82 FR 35454 ...	(c)(116)	Minor edit to update citation.
22a–174–9	Prohibition of air pollution.	4/04/72	5/31/72	37 FR 23085 ...	(b).	
		8/31/79	12/23/80	45 FR 84769 ...	(c) 11	Non-substantive numbering change.
		8/31/79	8/12/83	48 FR 36579 ...	(c) 11.	Full authority delegated for NSPS and NESHAPS.
			12/6/91	56 FR 63875 ...		Delegation of new subparts.
22a–174–10	Public Availability of Information.	4/04/72	5/31/72	37 FR 23085 ...	(b).	
22a–174–11	Prohibition against concealment of circumvention.	4/04/72	5/31/72	37 FR 23085 ...	(b).	
22a–174–12	Violations and enforcement.	4/4/72	5/31/72	37 FR 23085 ...	(b).	
22a–174–13	Variances	4/4/72	5/31/72	37 FR 23085 ...	(b).	
		8/31/79	12/23/80	45 FR 84769 ...	(c) 11	Non-substantive numbering change.
22a–174–14	Compliance with regulation no defense to nuisance claim.	4/04/72	5/31/72	37 FR 10842 ...	(b).	
22a–174–15	Severability	4/4/72	5/31/72	37 FR 10842 ...	(b).	
22a–174–16	Responsibility to comply with applicable regulations.	4/4/72	5/31/72	37 FR 10842 ...	(b).	
22a–174–17	Control of open burning.	4/04/72	5/31/72	37 FR 10842 ...	(b).	

TABLE 52.385—EPA-APPROVED REGULATIONS—Continued

Connecticut State citation	Title/subject	Dates		FEDERAL REGISTER citation	Section 52.370	Comments/description
		Date adopted by State	Date approved by EPA			
22a–174–17 (formerly 19–508–17).	Control of Open Burning.	4/4/72	9/1/16	81 FR 60274 ...	(b)(2)	DEEP regulation to control open burning. Paragraph (b) was revised 9/1/16 by redesignating paragraph (b) as (b)(1) and adding paragraph (b)(2) to read as follows: This rule, formerly known as Section 19–508–17, which was approved in paragraph (b)(1), is removed from the SIP and replaced by Connecticut General Statute (CGS) section 22a–174(f) and RCSA section 22a–174–1(19); see paragraph (c)(113)(A) of this section.
22a–174–18	Control of particulate emissions.	4/4/72	5/31/72	37 FR 10842 ...	(b).	
		11/30/73	4/16/74	39 FR 13651 ...	52.375	Allowed Hartford Electric Light & Connecticut Light & Power Supplies to use nonconforming fuel from 12/3/73 to 1/1/74.
		7/11/81	9/23/82	47 FR 41958 ...	(c) 22	Defines TSP RACT for fuel burning equipment and process sources including cupolas, foundries, and hot mix asphalt plants.

TABLE 52.385—EPA-APPROVED REGULATIONS—Continued

Connecticut State citation	Title/subject	Dates		FEDERAL REGISTER citation	Section 52.370	Comments/description
		Date adopted by State	Date approved by EPA			
22a–174–18	Control of particulate matter and visible emissions.	4/1/04	7/16/14	79 FR 41427 ...	(c)(104)	All of Section 22a–174–18 is approved, with the exception of the phrase ''or malfunction'' in Section 22a–174–18(j)(1) and all of Section 22a–174–18(j)(2), which CT DEEP withdrew from the SIP submittal. Because Connecticut withdrew Section 22a–174–18(j)(2) from its SIP submission, stationary sources subject to a federal NSPS will remain subject to the opacity limits contained in ''Control of particulate emissions'' under the SIP (See 37 FR 10842). See Section 19–508–18, ''Control of Particulate Emissions'' posted at *http://www.epa.gov/region1/topics/air/sips/sips_ct.html*.
22a–174–18	Control of particulate emissions.	12/22/2016	7/31/2017	82 FR 35454 ...	(c)(116)	Minor edit to update citation.
22a–174–19	Control of sulfur compound emissions.	4/4/72	5/31/72	37 FR 23085 ...	(b).	
		11/30/73	4/16/74	39 FR 13651 ...	52.375	Allowed Hartford Electric Light and Connecticut Power and Light to use nonconforming fuel.
		4/3/79	7/30/79	44 FR 44498 ...	(c) 10	Allowed Northeast Utilities to purchase, store, and burn nonconforming fuel.
		9/8/80	4/27/81	46 FR 23412 ...	(c) 12	Variance for Federal Paperboard, Inc.
		12/19/80 & 3/11/81	8/28/81	46 FR 43418 ...	(c) 14	Amends sulfur control strategy.
		3/11/81 & 7/15/81	8/28/81	46 FR 43418 ...	(c) 15	Amends New Source Ambient Impact Analysis Guideline.
		3/17/81	10/23/81	46 FR 51914 ...	(c) 17	Variance for Uniroyal, Inc.
		11/2/81	11/18/81	46 FR 56612 ...	(c) 18	Approval State Energy Trade program.

TABLE 52.385—EPA-APPROVED REGULATIONS—Continued

Connecticut State citation	Title/subject	Dates		FEDERAL REGISTER citation	Section 52.370	Comments/description
		Date adopted by State	Date approved by EPA			
		11/14/75	11/18/81	46 FR 56612 ...	52.380 (e)(1)	EPA disapproval revision which allows exemption for home heating with coal, historic demonstrations, and other small sources.
		11/12/81	12/22/81	46 FR 62062 ...	(c) 19	Variances for United Technologies Corp., Pratt & Whitney Aircraft Division facilities in New Haven and Middletown.
		7/7/81	11/12/82	47 FR 51129 ...	(c) 24	Variance for Sikorsky Aircraft—approved under the State Energy Trade Program.
		5/27/82	2/8/83	48 FR 5723	(c) 26	Variance for Dow Chemical—approved under the State Energy Trade Program.
		12/15/82	5/4/83	48 FR 20051 ...	(c) 27	Variance for Lydall, Inc.—approved under the State Energy trade (SET) Program.
		11/1/82	6/28/83	48 FR 29689 ...	(c) 28	Simkins Industries—approved under the State Energy Trade Program.
		3/28/83	12/20/83	48 FR 56218 ...	(c) 30	Variance for Loomis Institute—approved under the State Energy Trade Program.
		2/19/93	1/18/94	59 FR 2531	(c) 63	Changes requirements at Himilton Standard Division of UTC.
22a–174–19	Control of Sulfur Compound Emissions.	4/15/14	5/25/16	81 FR 33134 ...	(c)(111)	Revises section 22a–174–19.
22a–174–19a ...	Control of sulfur dioxide emissions from power plants and other large stationary sources of air pollution.	12/28/00	7/10/14	79 FR 39322 ...	(c)(103)	Approves the sulfur dioxide emission standards and fuel sulfur limits for units subject to the CT NO_X Budget program. The following sections were not submitted as part of the SIP: Sections (a)(5); (a)(8); (a)(11); (d); (e)(4); (f); (g); (h); and in (i)(2) reference to (e)(4).

TABLE 52.385—EPA-APPROVED REGULATIONS—Continued

Connecticut State citation	Title/subject	Dates		FEDERAL REGISTER citation	Section 52.370	Comments/description
		Date adopted by State	Date approved by EPA			
						Section 22a–174–19a(c) was repealed by the State of Connecticut effective April 15, 2014 and removed from the SIP without replacement effective May 25, 2016.
22a–174–19a ...	Control of sulfur dioxide emissions from power plants and other stationary sources of air pollution.	4/15/14	5/25/16	81 FR 33134 ...	(c)(111)	Withdraws section 22a–174–19a(c) previously approved in paragraph 52.370(c)(103) and revises sections 22a–174–19a(e) and 22a–174–19a(i).
22a–174–19b ...	Fuel Sulfur Content Limitations for Stationary Sources.	4/15/14	5/25/16	81 FR 33134 ...	(c)(111)	Addition of a new regulation with the exception of subsection (e) which was not submitted by the State.
22a–174–20	Control of organic compound emissions.	4/4/72	5/31/72	37 FR 23085 ...	(b).	
		8/31/79	12/23/80	45 FR 84769 ...	(c) 11	Requirements for certain Group I CTG source categories. Conditionally approved cutback asphalt and solvent metal cleaning categories.
		10/10/80	1/17/82	47 FR 762	(c) 20	Requirements for cutback asphalt (Group I—CTG).
		10/10/80	2/17/82	47 FR 6827	(c) 25	Requirements for Group II CTGs exclusive of controlling gasoline tank truck leaks, petroleum liquid storage external floating roof tanks, manufacture of vegetable oil, pneumatic rubber tire categories. Other VOC rules.
		10/10/80	6/7/82	47 FR 24452 ...	(c) 23	Alternative emission reduction provisions.
		12/10/82	2/1/84	49 FR 3989	(c) 29	Requirements for small open top degreasers (Group I—CTG).
		9/24/83	2/1/84	49 FR 3989	(c) 29	Exempts colds cleaners at auto repair facilities.

TABLE 52.385—EPA-APPROVED REGULATIONS—Continued

Connecticut State citation	Title/subject	Dates		FEDERAL REGISTER citation	Section 52.370	Comments/description
		Date adopted by State	Date approved by EPA			
		9/24/83	3/21/84	49 FR 10542 ...	(c) 32	Adds degreasing requirements for conveyorized and cold cleaning operations.
		8/31/79	3/21/84	49 FR 10542 ...	(c) 32	Requirements for solvent metal cleaning (Group I CTG).
		9/24/83	3/21/84	49 FR 10542 ...	(c) 32	Exempts storage vessels from submerged fill. Delays effective date of Stage I vapor recovery by 1 year. Requires RACT for all major sources of VOC not covered under a CTG document.
		9/24/83	10/19/84	49 FR 41026 ...	(c) 33	Adds major non-ctg sources covered by 20(ee) to applicability, compliance, alternative emission reduction and seasonal operation after burner provisions.
		12/13/84	7/18/85	50 FR 29229 ...	(c) 34	Revision to cutback asphalt regulation. Requires facilities with external floating roofs to install secondary seats. Changes to gasoline tank truck regulation.
		4/23/86	11/20/86	51 FR 41963 ...	(c) 36	VOC RACT for Connecticut Charcoal Company.
		4/28/86	2/19/87	52 FR 5104	(c) 37	VOC RACT for King Industries.
		8/8/87	12/17/87	52 FR 47925 ...	(c) 39	VOC RACT for Belding Corticelli Thread Company.
		5/28/86	2/17/88	51 FR 4621	(c) 41	Effective date clarification for Connecticut Charcoal.
		9/24/87	4/11/88	53 FR 11847 ...	(c) 42	VOC RACT for Raymark Industries, Inc.
		2/2/87	5/19/88	53 FR 17934 ...	(c) 38	Clarifies applicability of VOC compliance methods for surface coating sources.
		3/17/87	5/19/88	53 FR 17934 ...	(c) 38	Adds regulations for SOCMI fugitive leaks and polystyrene resins.
		8/21/87	7/12/88	53 FR 26256 ...	(c) 44	VOC RACT for Spongex International Ltd.
		12/26/86	8/1/88	53 FR 28884 ...	(c) 43	VOC RACT for American Cyanamid Company.
		10/27/88	3/8/89	54 FR 9781	(c) 48	VOC RACT for Dow Chemical, U.S.A.

TABLE 52.385—EPA-APPROVED REGULATIONS—Continued

Connecticut State citation	Title/subject	Dates		FEDERAL REGISTER citation	Section 52.370	Comments/description
		Date adopted by State	Date approved by EPA			
		6/7/88	3/24/89	54 FR 12193 ...	(c) 46	VOC RACT for New Departure Hyatt.
		12/14/88	4/10/89	54 FR 14226 ...	(c) 49	VOC RACT for Stanadyne.
		3/22/89	5/30/89	54 FR 22891 ...	(c) 51	VOC RACT for Pratt & Whitney Division of UTC.
		12/30/88	6/2/89	54 FR 23650 ...	(c) 50	Changes limit on volatility of gasoline.
		10/19/87	11/28/89	54 FR 48885 ...	(c) 47	VOC RACT for Frismar, Inc.
		10/18/88	11/39/89	54 FR 49284 ...	(c) 52	VOC RACT for Pfizer, Inc.
		9/5/89	12/22/89	54 FR 52798 ...	(c) 53	VOC RACT for Uniroyal Chemical Co.
		11/29/89	3/12/90	55 FR 9121	(c) 54	VOC RACT for Hamilton Standard Division of United Technologies Corp.
		11/2/88	3/14/90	55 FR 9442	(c) 55	VOC RACT for Heminway & Bartlett Manufacturing Company.
		10/31/89	10/18/91	56 FR 52205 ...	(c) 58	Changes applicability to facilities with ≥15 pounds VOC per day.
		10/31/89	10/18/91	56 FR 52205 ...	(c) 58	Various changes to Section 20 approved.
		9/1/93	11/19/93	58 FR 61041 ...	.....	Withdrawal of NPR for Sikorsky Aircraft Division of UTC, Bridgeport.
		1/29/90, 9/29/95, & 2/7/96	2/9/98	63 FR 6484	(c) (60)	VOC RACT for Sikorsky Aircraft Corporation in Stratford.
		6/3/96	4/24/98	63 FR 20318 ...	(c) (73)	Alternative VOC RACT for Risdon Corporation in Danbury.
		11/18/93	3/10/99	64 FR 12024 ...	(c)(75)	Changes to subsection 22a–174–20(s), 20(v), and 20(ee).
	Loading gasoline and other volatile organic compounds.	4/1/98	10/19/00	65 FR 62624 ...	(c)(84)	Changes to gasoline and volatile organic loading regulations.
	Metal Cleaning	7/26/07	8/22/12	77 FR 50595 ...	(c)(100)	Changes to solvent metal cleaning rule.
	Miscellaneous metal parts and products.	8/1/95	10/19/00	65 FR 62624 ...	(c)(84)	Changes to regulations to add emission limit for architectural aluminum panels.
	Restrictions on VOC Emissions from Cutback and Emulsified Asphalt.	12/29/08	8/22/12	77 FR 50595 ...	(c)(100)	Changes to cutback and emulsified asphalt paving rule.

TABLE 52.385—EPA-APPROVED REGULATIONS—Continued

Connecticut State citation	Title/subject	Dates		FEDERAL REGISTER citation	Section 52.370	Comments/description
		Date adopted by State	Date approved by EPA			
		04/06/10	6/9/14	79 FR 32873 ...	(c)(102)	Amendment of subdivision (f)(9), withdrawal of subsection (g), amendment of subdivisions (l)(1) and (l)(2), amendment of subsections (p) Metal furniture coatings, (q) Paper, film, and foil coating, amendment of subparagraph (s)(2)(B), amendment of subsection (ee) Reasonably available control technology for large sources, addition of subsection (ff) Flexible package printing, with the exception of the phrases ''or other method approved by the commissioner'' in subparagraph (ff)(1)(K) and ''or alternative method as approved by the commissioner'' in clause (ff)(5)(B)(vi),

TABLE 52.385—EPA-APPROVED REGULATIONS—Continued

Connecticut State citation	Title/subject	Dates		FEDERAL REGISTER citation	Section 52.370	Comments/description
		Date adopted by State	Date approved by EPA			
				.....	.....	addition of subsection (gg) Offset lithographic printing and letterpress printing, with the exception of the phrases ''or other method approved by the commissioner'' in subparagraph (gg)(1)(O) and ''or alternative method as approved by the commissioner'' in clause (gg)(7)(B)(vi), addition of subsection (hh) Large appliance coatings, with the exception of the phrases ''or other method approved by the commissioner'' in subparagraph (hh)(1)(CC) and ''or alternative method as approved by the commissioner'' in clause (hh)(7)(B)(vi), addition of (ii) Industrial solvent cleaning, with the exception of the phrases ''or other method approved by the commissioner'' in subparagraph (ii)(1)(I) and ''or alternative method as approved by the commissioner'' in clause (ii)(6)(B)(vi) and addition of (jj) Spray application equipment cleaning, with the exception of the phrases ''or other method approved by the commissioner'' in subparagraph (jj)(1)(H), with the exception of subparagraph (jj)(3)(D), and with the exception of the phrase ''or alternative method as approved by the commissioner'' in clause (JJ)(6)(B)(vii).

TABLE 52.385—EPA-APPROVED REGULATIONS—Continued

Connecticut State citation	Title/subject	Dates		FEDERAL REGISTER citation	Section 52.370	Comments/description
		Date adopted by State	Date approved by EPA			
22a–174–20	Control of organic compound emissions.	10/31/12	6/9/14	79 FR 32873 ...	(c)(103)	Amendment of subsection (s) Miscellaneous metal parts and products, amendment of subdivisions (aa)(1), (cc)(2), and (cc)(3), amendment of subparagraph (ii)(3)(A); and addition of subdivision (kk) Pleasure craft coatings.
22a–174–20	Control of organic compound emissions.	3/5/14	11/3/15	80 FR 67642 ...	(c)(110)	Large aboveground storage tanks updates: amend (a); withdraw (b)(1); amend (b)(2), (b)(3) and (b)(4); add (b)(17); amend (c) and (x)(12).
22a–174–20	Control of Organic Compound Emissions.	7/8/2015	12/15/2017	82 FR 59519 ...	(c)117	Removes sections (b)(6)–(b)(9) and (b)(11), Revises sections (a)(7), (b)(10), sections (b)(12)–(b)(16), and section (ee).
22a–174–21	Control of carbon monoxide emissions.	4/4/72	5/31/72	37 FR 23085 ...	(b).	
		9/21/82	3/21/84	49 FR 10542 ...	(c) 32	CO attainment plan.
22a–174–22	Control of Nitrogen Oxides Emissions.	11/19/96	9/28/99	64 FR 52238 ...	(c)(82)	Case-specific trading order for AlliedSignal, Inc., and U.S. Army Tank-Automotive and Armaments Command in Stratford.
22a–174–22	Control of Nitrogen Oxides Emissions.	11/19/96	9/28/99	64 FR 52238 ...	(c)(82)	Case-specific trading order for Connecticut Natural Gas Corporation in Rocky Hill.
22a–174–22	Control of Nitrogen Oxides Emissions.	12/20/96	9/28/99	64 FR 52238 ...	(c)(82)	Case-specific trading order for Cytec Industries, Inc., in Wallingford.
22a–174–22	Control of Nitrogen Oxides Emissions.	6/25/97	9/28/99	64 FR 52238 ...	(c)(82)	Amendments to case-specific trading order for Connecticut Natural Gas Corporation.
22a–174–22	Control of Nitrogen Oxides Emissions.	7/8/97	9/28/99	64 FR 52238 ...	(c)(82)	Amendments to case-specific trading order for AlliedSignal, Inc., and U.S. Army Tank-Automotive and Armaments Command in Stratford.

TABLE 52.385—EPA-APPROVED REGULATIONS—Continued

Connecticut State citation	Title/subject	Dates		FEDERAL REGISTER citation	Section 52.370	Comments/description
		Date adopted by State	Date approved by EPA			
22a–174–22	Control of Nitrogen Oxides Emissions.	7/23/97	9/28/99	64 FR 52238 ...	(c)(82)	Case-specific trading order for Ogden Martin Systems of Bristol, Inc., in Bristol.
22a–174–22	Control of NO_X nitrogen oxide emissions.	1/12/00	3/23/01	66 FR 16137 ...	(c)(88)	Case-specific trading order for Wisvest Bridgeport Harbor Station's Unit No. 2 in Bridgeport.
		5/22/00	3/23/01	66 FR 16137 ...	(c)(88)	Amendment to case-specific trading order for Ogden Martin System's facility in Bristol.
		5/22/00	3/23/01	66 FR 16137 ...	(c)(88)	Amendment to case-specific trading order for Connecticut Resources Recovery Authority.
		5/22/00	3/23/01	66 FR 16137 ...	(c)(88)	Amendment to case-specific order for American Ref-Fuel Company.
		5/22/00	3/23/01	66 FR 16137 ...	(c)(88)	Amendment to case-specific trading order for Bridgeport Resco Company.
		5/22/00	3/23/01	66 FR 16137 ...	(c)(88)	Case-specific trading order for Wisvest Bridgeport Harbor Station's Unit No. 4 in Bridgeport.
		5/22/00	3/23/01	66 FR 16137 ...	(c)(88)	Case-specific trading order for Wisvest New Haven Harbor Station's auxiliary Boiler in New Haven.
		5/31/00	3/23/01	66 FR 16137 ...	(c)(88)	Case-specific trading order for Wisvest Bridgeport Harbor Station's Unit No. 3 in Bridgeport.
		5/31/00	3/23/01	66 FR 16137 ...	(c)(88)	Case-specific trading order for Wisvest New Haven Harbor Station's Unit No. 1 in New Haven.
		12/28/00	7/10/14	79 FR 39322 ...	[Insert next available paragraph number in sequence].	Approves the Oct–April NO_X emission limits for units subject to the CT NO_X Budget program. Only section (e)(3) was submitted as part of the SIP revision.
22a–174–22	Control of Nitrogen Oxides emissions.	7/16/12	8/3/15	80 FR 45887 ...	(c)(109)	Connecticut Trading Agreement and Order No. 8187, Modification 1.
22a–174–22	Control of Nitrogen Oxides emissions.	7/16/12	8/3/15	80 FR 45887 ...	(c)(109)	Connecticut Trading Agreement and Order No. 8242, Modification 1.

TABLE 52.385—EPA-APPROVED REGULATIONS—Continued

Connecticut State citation	Title/subject	Dates		FEDERAL REGISTER citation	Section 52.370	Comments/description
		Date adopted by State	Date approved by EPA			
22a–174–22a ...	Nitrogen Oxides (NO_X)Budget Program.	12/15/98	9/28/99	64 FR 52238 ...	(c)(80)	Approval of NO_X cap and allowance trading regulations.
		9/04/07	1/24/08	73 FR 4105	(c)(97)	Repealed as of January 24, 2008. Superseded by CAIR.
22a–174–22b ...	Post-2002 Nitrogen Oxides (NO_X) Budget Program.	9/29/99	12/27/00	65 FR 81746 ...	(c)86.	
	The Connecticut Post-2002 NO_X Budget Program, as of May 1, 2010.	9/04/07	1/24/08	73 FR 4105	(c)(97)	Repealed as of May 1, 2010. Superseded by CAIR.
22a–174–22c ...	The Clean Air Interstate Rule (CAIR) Nitrogen Oxides (NO_X) Ozone Season Trading Program.	9/04/07	1/24/08	73 FR 4105	(c)(97).	
22a–174–22c ...	The Clean Air Interstate Rule (CAIR) Nitrogen Oxides (NO_X) Ozone Season Trading Program.	12/22/2016	7/31/2017	82 FR 35454 ...	(c)(116)	Minor edit to update citation.
22a–174–22e ...	Control of nitrogen oxides emissions from fuel-burning equipment at major stationary sources of nitrogen oxides.	12/22/2016	7/31/2017	82 FR 35454 ...	(c)(116)	New regulation applicable to major sources of NO_X.
22a–174–22f	High daily NO_X emitting units at non-major sources of NO_X.	12/22/2016	7/31/2017	82 FR 35454 ...	(c)(116)	New regulation applicable to non-major sources of NO_X.
22a–174–23	Control of Odors	4/4/72	5/31/72	37 FR 23085 ...	(b).	
	Rescinded from Federal SIP.	8/31/79	12/23/80	45 FR 84769 ...	(c) 11	EPA has no authority to control odors.
22a–174–24	Connecticut primary and secondary standards.	4/4/72	5/31/72	37 FR 23085 ...	(b).	
		7/11/81	11/18/81	46 FR 56612 ...	(c) 18	Eliminated State 24-hour and annual standard for SO2.
		10/8/80	2/17/82	47 FR 6827	(c) 25	Adopted ambient air quality standards for lead and revised the ozone standard.
		10/8/80	8/24/82	47 FR 36822 ...	(c) 20	EPA took ''no action'' on definition of the term ''acceptable method'' because did not ensure consistency with EPA monitoring regulations.
		10/8/80	11/2/82	47 FR 49646 ...	(c) 20	Correction to subparagraph designation.
		10/8/80	12/13/85	50 FR 50906 ...	(c) 35	Approved definition of acceptable method.
		2/25/91	3/24/92	57 FR 10139 ...	(c) 61	Requires use of low sulfur fuels at Connecticut Light & Power in Montville.

TABLE 52.385—EPA-APPROVED REGULATIONS—Continued

Connecticut State citation	Title/subject	Dates		FEDERAL REGISTER citation	Section 52.370	Comments/description
		Date adopted by State	Date approved by EPA			
		2/14/92	11/20/92	57 FR 54703 ...	(c) 59	Requires use of low sulfur fuels at Stones CT Paperboard Corp.
		2/5/92	11/20/92	57 FR 54703 ...	(c) 59	Requires use of low sulfur fuel at Hartford Hospital.
22a–174–24	Connecticut primary and secondary ambient air quality standards.	04/07/14	06/24/15	80 FR 36242 ...	(c)(106)	All of 22a–174–24 is approved, with the exception of subsection (m) Dioxin, which Connecticut withdrew from its SIP submittal.
22a–174–25	Effective date	4/4/72	5/31/72	37 FR 23085 ...	(b).	
22a–174–27	Emissions standards for periodic motor vehicle inspection and maintenance.	3/26/98	3/10/99	64 FR 12005 ...	(c)78	Revised Department of Environmental Protection regulation contain I/M emission standards.
22a–174–27	Emission standards and on-board diagnostic II test requirements for periodic motor vehicle inspection and maintenance.	8/25/04	12/05/08	74 FR 74019 ...	(c)(98)	DEP regulations including emissions standards and OBD2 requirements. Paragraph 52.370(c)(98) was revised March 17, 2015 by redesignating paragraph (c)(98)(i)(A) as (c)(98)(i)(A)(*1*) and adding paragraph (c)(98)(i)(A)(*2*) to read as follows: (*2*) In revisions to the State Implementation Plan submitted by the Connecticut Department of Environmental Protection on January 22, 2010 section 22a–174–27 (e) was repealed by the State of Connecticut effective August 10, 2009. Section 22a–174–27 (e), which was approved in paragraph (c)(98)(i)(A)(*1*), is removed from the SIP without replacement; see paragraph (c)(105)(i)(B) of this section.

TABLE 52.385—EPA-APPROVED REGULATIONS—Continued

Connecticut State citation	Title/subject	Dates		FEDERAL REGISTER citation	Section 52.370	Comments/description
		Date adopted by State	Date approved by EPA			
22a–174–27	Emission standards and on-board diagnostic II test requirements for periodic motor vehicle inspection and maintenance.	8/10/09	3/17/15	80 FR 13770 ...	(c)(105)	This SIP revision includes a change to exempt composite vehicles from tailpipe inspections. Revision to Section 22a–174–27 (b) and removal of Section 22a–174–27 (e).
22a–174–28	SIP revision concerning Oxygenated Gasoline.	09/28/99	01/31/00	64 FR 67188 ...	(c)(83)	This SIP revision removes the oxygenated gasoline requirement for the Connecticut portion of the New York—N. New Jersey—Long Island area and changes it to a contingency measure for maintaining the carbon monoxide National Ambient Air Quality Standard in the southwest Connecticut area.
22a–174–28	SIP revision concerning Oxygenated Gasoline.	04/07/14	06/24/15	80 FR 36242 ...	(c)(106)	Amendment of subdivision (a)(5) Control period.
14–164c	Periodic Motor Vehicle Inspection and Maintenance.	4/7/98	3/10/99	64 FR 12005 ...	(c)78	Revised Department of Motor Vehicles regulation for the Connecticut I/M Program.
		6/24/99	10/27/00	10/27/00, 65 FR 64360.	(c)89	Revised subsection (b) of Section 14–164c–11a of the Department of Motor Vehicles regulation concerning emissions repairs expenditure requirement to receive waver.
14–164c	Periodic Motor Vehicle Emissions Inspection and Maintenance.	5/28/04	12/05/08	74 FR 74019 ...	(c)(98)	DMV regulation revisions for test and repair network and implementing OBD2 and other tests.
22a–174–30	Gasoline Vapor Recovery.	1/12/93	12/17/93	58 FR 65930 ...	(c) 62	Requires Stage II vapor recovery from gasoline dispensers.
			1/18/94	59 FR 2649	(c) 62	Correction to 12/17/93 notice.

TABLE 52.385—EPA-APPROVED REGULATIONS—Continued

Connecticut State citation	Title/subject	Dates		FEDERAL REGISTER citation	Section 52.370	Comments/description
		Date adopted by State	Date approved by EPA			
		5/10/04	8/31/06	71 FR 51761 ...	(c)(95)	Added new requirements for PV vents and increased frequency of Stage II testing. All of 22a–174–30 is approved with the exception of subsection (c)(5), which the state did not submit as part of the SIP revision.
22a–174–30	Dispensing of Gasoline/Stage II Vapor Recovery.	7/8/2015	12/15/2017	82 FR 59519 ...	(c)117	22a–174–30 was repealed by CT and withdrawn from the SIP and replaced by 22a–174–30a.
22a–174–30a ...	Stage I Vapor Recovery.	7/8/2015	12/15/2017	82 FR 59519 ...	(c)117	Replaces the repealed section 22a–174–30.
22a–174–32	Reasonably available control technology for volatile organic compounds.	11/18/93	3/10/99	64 FR 12024 ...	(c)(76)	Conditional approval of the addition of non-CTG VOC RACT requirements.
22a–174–32		8/27/99	10/19/00	65 FR 62624 ...	(c)(84)	Changes to the non-CTG regulation.
22a–174–32	Reasonably available control technology for volatile organic compounds.	4/15/02	10/24/05	70 FR 61384 ...	(c)(96)	VOC RACT for Hitchcock Chair.
22a–174–32	Reasonably available control technology for volatile organic compounds.	4/23/01	10/24/05	70 FR 61384 ...	(c)(96)	VOC RACT for Kimberly Clark.
22a–174–32	Reasonably available control technology for volatile organic compounds.	10/03/02	10/24/05	70 FR 61384 ...	(c)(96)	VOC RACT for Watson Laboratories.
22a–174–32	Reasonably available control technology for volatile organic compounds.	10/04/02	10/24/05	70 FR 61384 ...	(c)(96)	VOC RACT for Ross & Roberts.
22a–174–32	Reasonably available control technology for volatile organic compounds.	9/13/05	5/1/17	82 FR 20262 ...	(c)(115)	VOC RACT for Mallace Industries
22a–174–32	Reasonably available control technology for volatile organic compounds.	9/3/09	5/1/17	82 FR 20262 ...	(c)(115)	VOC RACT for Hamilton Sundstrand
22a–174–32	Reasonably available control technology for volatile organic compounds.	7/8/2015	12/15/2017	82 FR 59519 ...	(c)117	Revises section (b)(3).
22a–174–36	Low Emission Vehicles.	12/23/94	3/9/00	65 FR 12479 ...	(c)(79)	Approval of Low Emission Vehicle Program.
22a–174–36b ...	Low Emission Vehicles II Program..	12/22/05	3/17/15	80 FR 13770 ...	(c)(105)	Adoption of Connecticut's Low Emissions Vehicle II (LEV II) Program. Sections 22a–174–36b (a), (b), (d), (f) through (j), (l), (m), and new sections (n) and (o).

TABLE 52.385—EPA-APPROVED REGULATIONS—Continued

Connecticut State citation	Title/subject	Dates		FEDERAL REGISTER citation	Section 52.370	Comments/description
		Date adopted by State	Date approved by EPA			
22a–174–36b ...	Low Emission Vehicles II Program..	8/10/09	3/17/15	80 FR 13770 ...	(c)(105)	Sections 22a–174–36b (c), (e), and (k).
22a–174–36(g)	Alternative Means of Compliance via the National Low Emission Vehicle (LEV) Program.	1/29/99	3/9/00	65 FR 12479 ...	(c)(79)	Approval of Alternative Means of Compliance via the National Low Emission Vehicle (LEV) Program for the ''California'' low emission vehicle program adopted above.
22a–174–38	Municipal Waste Combustors.	10/26/00	12/6/01	66 FR 63312 ...	c(90)	The nitrogen oxide emission limits and related regulatory provisions of 22a–174–38, Municipal Waste Combustors, included in sections 22a–174–38 (a), (b), (c), (d), (i), (j), (k), (l), and (m).
22a–174–38	Municipal Waste Combustors.	8/2/2016	7/31/2017	82 FR 35454 ...	(c)(116)	Portions of previously approved regulation were revised, primarily to incorporate tightened NO_X emission limit for mass burn water-walled units.
22a–174–40	Consumer Products	7/26/07	6/9/14	79 FR 32873 ...	(c)(103)	All of Section 22a–174–40 is approved, with the exception of subdivisions (4) through (7) in subsection (c) and subparagraphs (C) and (D) in subdivision (f)(2), which CT withdrew from its SIP submittal.
22a–174–41	Architectural and Industrial Maintenance Products.	7/26/07	8/22/12	77 FR 50595 ...	(c)(100)	New rule limiting VOC emissions from architectural and industrial maintenance coatings.
22a–174–43	Portable Fuel Container Spillage Control.	5/10/04	8/31/06	71 FR 51761 ...	(c)(95).	
22a–174–43	Portable Fuel Container Spillage Control.	5/10/04	9/1/16	81 FR 60274 ...	(c)(95)	DEEP regulation to control portable fuel container spillage. Paragraph (c)(95) was revised 9/1/16 by removing and reserving paragraph (c)(95)(i)(C).
22a–174–44	Adhesives and Sealants.	10/03/08	6/9/14	79 FR 32873 ...	(c)(103).	
22a–174–100 ...	Permits for construction of indirect sources Rescinded from federal SIP.	1/9/74	2/25/74	39 FR 7280	(c) 4	Requires review of air impacts of indirect sources.

TABLE 52.385—EPA-APPROVED REGULATIONS—Continued

Connecticut State citation	Title/subject	Dates		FEDERAL REGISTER citation	Section 52.370	Comments/description
		Date adopted by State	Date approved by EPA			
		8/20/74	2/13/76	41 FR 6765	(c) 6	Added indirect source review (ISR) regulations.
		6/30/77	1/26/79	44 FR 5427	(c) 9.	
		NA	12/23/79	45 FR 84769 ...	(c) 11	SIP shown to attain standards as expeditiously as practicable without ISR regulation.
Connecticut General Statutes. Section 1–85.	Interest in conflict with discharge of duties.	October 1, 1989	June 3, 2016	81 FR 35636 ...	c(112)	Criteria for identifying a conflict of interest.
Connecticut General Statutes. Section 16a–21a.	Sulfur content of home heating oil and off road diesel fuel. Suspension of requirements for emergency.	July 8, 2013	June 3, 2016	81 FR 35636 ...	c(112)	Allowable sulfur content of fuels provided. Criteria for suspension of requirements identified.
Connecticut General Statutes. Section 22a–171.	Duties of Commissioner of Energy and Environmental Protection..	October 1, 1984	June 3, 2016	81 FR 35636 ...	c(112)	Obligations and activities of the Commissioner identified.
Connecticut General Statute, Title 446c, Section 22a–174(f).	Powers of the commissioner. Open Burning.	3/30/00	9/1/16	81 FR 60274 ...	(c)(113)	Control of open burning; see paragraph (c)(113)(A) of this section.
Connecticut Public Act No. 13–120.	An act concerning gasoline Vapor recovery systems.	6/18/2013	12/15/2017	82 FR 59519 ...	(c)117	Revises section 22a–174e of the Connecticut General Statutes to require decommissioning of Stage II Vapor Recovery Systems.

[62 FR 52022, Oct. 6, 1997; 62 FR 65224, Dec. 11, 1997, as amended at 63 FR 6487, Feb. 9, 1998; 63 FR 20318, Apr. 24, 1998; 64 FR 12024, Mar. 10, 1999; 64 FR 52238, Sept. 28, 1999; 64 FR 67192, Dec. 1, 1999; 65 FR 12479, Mar. 9, 2000; 65 FR 62624, Oct. 19, 2000; 65 FR 64360, Oct. 27, 2000; 65 FR 81746, Dec. 27, 2000; 66 FR 16137, Mar. 23, 2001; 66 FR 63312, Dec. 6, 2001; 68 FR 9011, Feb. 27, 2003; 70 FR 61387, Oct. 24, 2005; 71 FR 51765, Aug. 31, 2006; 73 FR 4109, Jan. 24, 2008; 73 FR 74026, Dec. 5, 2008; 77 FR 50600, Aug. 22, 2012; 79 FR 32875, June 9, 2014; 79 FR 39329, July 10, 2014; 79 FR 41436, July 16, 2014; 80 FR 13770, Mar. 17, 2015; 80 FR 36245, June 24, 2015; 80 FR 43964, July 24, 2015; 80 FR 45890, Aug. 3, 2015; 80 FR 67644, Nov. 3, 2015; 81 FR 35640, June 3, 2016; 81 FR 33138, May 25, 2016; 81 FR 60277, Sept. 1, 2016; 82 FR 20266, May 1, 2017; 82 FR 35456, July 31, 2017; 82 FR 59521, Dec. 15, 2017]

EDITORIAL NOTE: At 79 FR 39329, July 10, 2014, § 52.385 was amended; however, portions of the amendment could not be incorporated due to inaccurate amendatory instruction.

§ 52.386 Section 110(a)(2) infrastructure requirements.

(a) The Connecticut Department of Energy and Environmental Protection submitted the following infrastructure SIPs on these dates: 2008 Pb NAAQS—October 13, 2011; 2008 ozone NAAQS—December 28, 2012; 2010 NO_2 NAAQS—January 2, 2013; and 2010 SO_2 NAAQS—May 30, 2013. These infrastructure SIPs are approved, with the exception of certain elements within 110(a)(2)(C)(ii),

D(i)(II), and J(iii), which are conditionally approved. Connecticut submitted infrastructure SIPs for the 1997 and 2006 $PM_{2.5}$ NAAQS on September 4, 2008, and September 18, 2009, respectively, and elements 110(a)(2)(A), D(ii), and E(ii), which were previously conditionally approved, are now approved. Also with respect to the 1997 and 2006 $PM_{2.5}$ NAAQS, elements related to PSD, which include 110(a)(2)C(ii), D(i)(II), and J(iii) are newly conditionally approved. Connecticut also submitted an Infrastructure SIP for the 1997 8-hour ozone NAAQS on December 28, 2007, and element 110(a)(2)(D)(ii), which was previously conditionally approved, is now approved.

(b) On May 30, 2013, the State of Connecticut submitted a State Implementation Plan (SIP) revision addressing the Section 110(a)(2)(D)(i)(I) interstate transport requirements of the Clean Air Act for the 2010 SO_2 National Ambient Air Quality Standards (NAAQS). EPA has found that Connecticut's May 30, 2013 submittal meets the requirements of Section 110(a)(2)(D)(i)(I) for the 2010 SO_2 NAAQS.

[81 FR 35640, June 3, 2016, as amended at 82 FR 37015, Aug. 8, 2017]

§ 52.387 Interstate Transport for the 1997 8-hour ozone and $PM_{2.5}$ NAAQS.

On March 13, 2007, the State of Connecticut submitted a State Implementation Plan (SIP) revision addressing the Section 110(a)(2)(D)(i) interstate transport requirements of the Clean Air Act for the 1997 8-hour ozone and $PM_{2.5}$ National Ambient Air Quality Standards (NAAQS). There are four distinct elements related to the impact of interstate transport of air pollutants. These include prohibiting significant contribution to downwind nonattainment of the NAAQS, interference with maintenance of the NAAQS, interference with plans in another state to prevent significant deterioration of air quality, and interference with efforts of other states to protect visibility. EPA has found that Connecticut's March 13, 2007 submittal adequately addresses these four distinct elements and has approved the submittal as meeting the requirements of Section 110(a)(2)(D)(i) for the 1997 8-hour ozone and $PM_{2.5}$ NAAQS.

[73 FR 25518, May 7, 2008]

Subpart I—Delaware

§ 52.420 Identification of plan.

(a) *Purpose and scope.* This section sets forth the applicable State implementation plan for Delaware under section 110 of the Clean Air Act, 42 U.S.C. 7410, and 40 CFR part 51 to meet national ambient air quality standards.

(b) *Incorporation by reference.* (1) Material listed in in paragraphs (c) and (d) of this section with an EPA approval date prior to July 1, 2016, was approved for incorporation by reference by the Director of the Federal Register in accordance with 5 U.S.C. 552(a) and 1 CFR part 51. Entries in paragraphs (c) and (d) of this section with the EPA approval dates after July 1, 2016 for the State of Delaware have been approved by EPA for the inclusion in the SIP and for incorporation by reference into the plan as it is contained in this section, and will be considered by the Director of the Federal Register for approval in the next update to the SIP compilation.

(2) EPA Region III certifies that the materials provided by EPA at the addresses in paragraph (b)(3) of this section are an exact duplicate of the officially promulgated state rules/regulations which have been approved as part of the SIP as of the dates referenced in paragraph (b)(1). No additional revisions were made to paragraph (d) between the last incorporation by reference date of July 1, 2013 and July 1, 2016.

(3) Copies of the materials incorporated by reference into the state implementation plan may be inspected at the Environmental Protection Agency, Region III, 1650 Arch Street, Philadelphia, Pennsylvania 19103. To obtain the material, please call the Regional Office at (215) 814–3376. You may also inspect the material with an EPA approval date prior to July 1, 2016 for the State of Delaware at the National Archives and Records Administration (NARA). For information on the availability of this material at NARA, go

to: *http://www.archives.gov/federal-register/cfr/ibr-locations.html.*

(c) *EPA approved regulations.*

EPA-APPROVED REGULATIONS AND STATUTES IN THE DELAWARE SIP

State regulation (7 DNREC 1100)	Title/subject	State effective date	EPA approval date	Additional explanation
1101 Definitions and Administrative Principles				
Section 1.0	General Provisions	9/11/2008	8/11/2010, 75 FR 48566.	
Section 2.0	Definitions	9/11/2008	8/11/2010, 75 FR 48566	Revised format for all definitions which EPA has previously approved as part of the SIP.
Section 3.0	Administrative Principles	9/11/2008	8/11/2010, 75 FR 48566.	
Section 4.0	Abbreviations	9/11/2008	8/11/2010, 75 FR 48566.	
1102 Permits				
Section 1.0	General Provisions	9/11/2008	8/11/2010, 75 FR 48566.	
Section 2.0	Applicability	9/11/2008	8/11/2010, 75 FR 48566.	
Section 3.0	Application/Registration Prepared by Interested Party.	9/11/2008	8/11/2010, 75 FR 48566.	
Section 4.0	Cancellation of Construction Permits.	9/11/2008	8/11/2010, 75 FR 48566.	
Section 5.0	Action on Applications	9/11/2008	8/11/2010, 75 FR 48566.	
Section 6.0	Denial, Suspension or Revocation of Operating Permits.	9/11/2008	8/11/2010, 75 FR 48566.	
Section 7.0	Transfer of Permit/Registration Prohibited.	9/11/2008	8/11/2010, 75 FR 48566.	
Section 8.0	Availability of Permit/Registration	9/11/2008	8/11/2010, 75 FR 48566.	
Section 9.0	Registration Submittal	9/11/2008	8/11/2010, 75 FR 48566.	
Section 10.0	Source Category Permit Application	9/11/2008	8/11/2010, 75 FR 48566.	
Section 11.0	Permit Application	9/11/2008	8/11/2010, 75 FR 48566.	
Section 12.0	Public Participation	9/11/2008	8/11/2010, 75 FR 48566.	
Section 13.0	Department Records	9/11/2008	8/11/2010, 75 FR 48566.	
Appendix A	[List of Permits Exemptions]	1/11/2006 9/11/2008	12/4/2012, 77 FR 71700	Addition of paragraphs 32.0 and 33.0 (formerly gg. and hh. respectively).
1103 Ambient Air Quality Standards				
Section 1.0	General Provisions	1/11/2014	6/17/2014, 79 FR 34441	Revised sections
Section 2.0	General Restrictions	9/11/2008	8/11/2010, 75 FR 48566.	
Section 3.0	Suspended Particulates	9/11/2008	8/11/2010, 75 FR 48566.	
Section 4.0	Sulfur Dioxide	1/11/2014	6/17/2014, 79 FR 34441	Revised sections
Section 5.0	Carbon Monoxide	9/11/2008	8/11/2010, 75 FR 48566.	
Section 6.0	Ozone	1/11/2014	6/17/2014, 79 FR 34441	Revised sections
Section 8.0	Nitrogen Dioxide	1/11/2014	6/17/2014, 79 FR 34441	Revised sections.
Section 10.0	Lead	1/11/2014	6/17/2014, 79 FR 34441	Revised sections.
Section 11.0	PM_{10} and $PM_{2.5}$ Particulates	1/11/2014	6/17/2014, 79 FR 34441	Revised sections
1104 Particulate Emissions from Fuel Burning Equipment				
Section 1.0	General Provisions	9/11/2008	8/11/2010, 75 FR 48566.	
Section 2.0	Emission Limits	9/11/2008	8/11/2010, 75 FR 48566.	
1105 Particulate Emissions from Industrial Process Operations				
Section 1.0	General Provisions	9/11/2008	8/11/2010, 75 FR 48566.	
Section 2.0	General Restrictions	9/11/2008	8/11/2010, 75 FR 48566.	
Section 3.0	Restrictions on Hot Mix Asphalt Batching Operations.	9/11/2008	8/11/2010, 75 FR 48566.	
Section 4.0	Restrictions on Secondary Metal Operations.	9/11/2008	8/11/2010, 75 FR 48566.	
Section 5.0	Restrictions on Petroleum Refining Operations.	9/11/2008	8/11/2010, 75 FR 48566.	

EPA-APPROVED REGULATIONS AND STATUTES IN THE DELAWARE SIP—Continued

State regulation (7 DNREC 1100)	Title/subject	State effective date	EPA approval date	Additional explanation
Section 6.0	Restrictions on Prill Tower Operation.	9/11/2008	8/11/2010, 75 FR 48566.	
Section 7.0	Control of Potentially Hazardous Particulate Matter.	9/11/2008	8/11/2010, 75 FR 48566.	
1106 Particulate Emissions from Construction and Materials Handling				
Section 1.0	General Provisions	9/11/2008	8/11/2010, 75 FR 48566.	
Section 2.0	Demolition	9/11/2008	8/11/2010, 75 FR 48566.	
Section 3.0	Grading, Land Clearing, Excavation and Use of Non-Paved Roads.	9/11/2008	8/11/2010, 75 FR 48566.	
Section 4.0	Material Movement	9/11/2008	8/11/2010, 75 FR 48566.	
Section 5.0	Sandblasting	9/11/2008	8/11/2010, 75 FR 48566.	
Section 6.0	Material Storage	9/11/2008	8/11/2010, 75 FR 48566.	
1107 Particulate Emissions from Incineration of Noninfectious Waste				
Section 1.0	General Provisions	9/11/2008	8/11/2010, 75 FR 48566.	
Section 2	Restrictions	12/8/1983	10/3/1984, 49 FR 39061	Provisions were revised 10/13/1989 by State, but not submitted to EPA as SIP revisions.
1108 Sulfur Dioxide Emissions from Fuel Burning Equipment				
Section 1.0	General Provisions	9/11/2008	8/11/2010, 75 FR 48566.	
Section 2.0	Limit on Sulfur Content of Fuel	9/11/2008	8/11/2010, 75 FR 48566.	
Section 3.0	Emissions Control in Lieu of Sulfur Content Limits of 2.0 of this Regulation.	9/11/2008	8/11/2010, 75 FR 48566.	
1109 Emissions of Sulfur Compounds from Industrial Operations				
Section 1.0	General Provisions	9/11/2008	8/11/2010, 75 FR 48566.	
Section 2.0	Restrictions on Sulfuric Acid Manufacturing Operations.	9/11/2008	8/11/2010, 75 FR 48566	Section 2.2 (State effective date: 9/26/1980) is Federally enforceable as a Section 111(d) plan and codified at 40 CFR 62.1875.
Section 3.0	Restriction on Sulfur Recovery Operations.	9/11/2008	8/11/2010, 75 FR 48566.	
Section 4.0	Stack Height Requirements	9/11/2008	8/11/2010, 75 FR 48566.	
1110 Control of Sulfur Dioxide Emissions—Kent and Sussex Counties				
Section 1.0	Requirements for Existing Sources of Sulfur Dioxide.	9/11/2008	8/11/2010, 75 FR 48566.	
Section 2.0	Requirements for New Sources of Sulfur Dioxide.	9/11/2008	8/11/2010, 75 FR 48566.	
1111 Carbon Monoxide Emissions from Industrial Process Operations—New Castle County				
Section 1.0	General Provisions	9/11/2008	8/11/2010, 75 FR 48566.	
Section 2.0	Restrictions on Petroleum Refining Operations.	9/11/2008	8/11/2010, 75 FR 48566.	
1112 Control of Nitrogen Oxide Emissions				
Section 1.0	Applicability	9/11/2008	8/11/2010, 75 FR 48566.	
Section 2.0	Definitions	9/11/2008	8/11/2010, 75 FR 48566.	
Section 3.0	Standards	9/11/2008	8/11/2010, 75 FR 48566.	
Section 4.0	Exemptions	9/11/2008	8/11/2010, 75 FR 48566.	
Section 5.0	Alternative and Equivalent RACT Determination.	9/11/2008	8/11/2010, 75 FR 48566.	
Section 6.0	RACT Proposals	9/11/2008	8/11/2010, 75 FR 48566.	

EPA-APPROVED REGULATIONS AND STATUTES IN THE DELAWARE SIP—Continued

State regulation (7 DNREC 1100)	Title/subject	State effective date	EPA approval date	Additional explanation
Section 7.0	Compliance, Certification, Recordkeeping, and Reporting Requirements.	9/11/2008	8/11/2010, 75 FR 48566.	
1113 Open Burning				
Section 1.0	Purpose	4/11/2007	9/20/2007 72 FR 53686.	
Section 2.0	Applicability	4/11/2007	9/20/2007 72 FR 53686.	
Section 3.0	Definitions	9/11/2008	8/11/2010, 75 FR 48566.	
Section 4.0	Prohibitions and Related Provisions	9/11/2008	8/11/2010, 75 FR 48566.	
Section 5.0	Season and Time Restrictions	9/11/2008	8/11/2010, 75 FR 48566.	
Section 6.0	Allowable Open Burning	9/11/2008	8/11/2010, 75 FR 48566.	
Section 7.0	Exemptions	4/11/2007	9/20/2007 72 FR 53686.	
1114 Visible Emissions				
Section 1.0	General Provisions	9/11/2008	8/11/2010, 75 FR 48566.	
Section 2.0	Requirements	9/11/2008	8/11/2010, 75 FR 48566.	
Section 3.0	Alternate Opacity Requirements	9/11/2008	8/11/2010, 75 FR 48566.	
Section 4.0	Compliance with Opacity Standards	9/11/2008	8/11/2010, 75 FR 48566.	
1115 Air Pollution Alert and Emergency Plan				
Section 1.0	General Provisions	9/11/2008	8/11/2010, 75 FR 48566.	
Section 2.0	Stages and Criteria	9/11/2008	8/11/2010, 75 FR 48566.	
Section 3.0	Required Actions	9/11/2008	8/11/2010, 75 FR 48566.	
Section 4.0	Standby Plans	9/11/2008	8/11/2010, 75 FR 48566.	
1116 Sources Having an Interstate Air Pollution Potential				
Section 1.0	General Provisions	9/11/2008	8/11/2010, 75 FR 48566.	
Section 2.0	Limitations	9/11/2008	8/11/2010, 75 FR 48566.	
Section 3.0	Requirements	9/11/2008	8/11/2010, 75 FR 48566.	
1117 Source Monitoring, Recordkeeping and Reporting				
Section 1.0	Definitions and Administrative Principles.	9/11/2008	8/11/2010, 75 FR 48566.	
Section 2.0	Sampling and Monitoring	9/11/2008	8/11/2010, 75 FR 48566.	
Section 3.0	Minimum Emission Monitoring Requirements for Existing Sources.	9/11/2008	8/11/2010, 75 FR 48566.	
Section 4.0	Performance Specifications	9/11/2008	8/11/2010, 75 FR 48566.	
Section 5.0	Minimum Data Requirements	9/11/2008	8/11/2010, 75 FR 48566.	
Section 6.0	Data Reduction	9/11/2008	8/11/2010, 75 FR 48566.	
Section 7.0	Emission Statement	9/11/2008	8/11/2010, 75 FR 48566.	
1123 Standards of Performance for Steel Plants: Electric Arc Furnaces				
Section 1.0	Applicability	9/11/2008	8/11/2010, 75 FR 48566.	
Section 2.0	Definitions	9/11/2008	8/11/2010, 75 FR 48566.	
Section 3.0	Standard for Particulate Matter	9/11/2008	8/11/2010, 75 FR 48566.	
Section 4.0	Monitoring of Operations	9/11/2008	8/11/2010, 75 FR 48566.	
Section 5.0	Test Methods and Procedures	9/11/2008	8/11/2010, 75 FR 48566.	
1124 Control of Volatile Organic Compound Emissions				
Section 1.0	General Provisions	9/11/2008	8/11/2010, 75 FR 48566.	
Section 2.0	Definitions	4/11/2010	9/25/2012, 77 FR 58953	Amended to add definitions.
Section 3.0	Applicability	9/11/2008	8/11/2010, 75 FR 48566.	
Section 4.0	Compliance Certification, Recordkeeping, and Reporting Requirements for Coating Sources.	9/11/2008	8/11/2010, 75 FR 48566.	
Section 5.0	Compliance Certification, Recordkeeping, and Reporting Requirements for Non-Coating Sources.	9/11/2008	8/11/2010, 75 FR 48566.	
Section 6.0	General Recordkeeping	9/11/2008	8/11/2010, 75 FR 48566.	
Section 7.0	Circumvention	9/11/2008	8/11/2010, 75 FR 48566.	
Section 8.0	Handling, Storage, and Disposal of Volatile Organic Compounds (VOCs).	3/11/2011	4/13/2012, 77 FR 22224.	
Section 9.0	Compliance, Permits, Enforceability	9/11/2008	8/11/2010, 75 FR 48566.	

EPA-APPROVED REGULATIONS AND STATUTES IN THE DELAWARE SIP—Continued

State regulation (7 DNREC 1100)	Title/subject	State effective date	EPA approval date	Additional explanation
Section 10.0	Aerospace Coatings	9/11/2008	8/11/2010, 75 FR 48566.	
Section 11.0	Mobile Equipment Repair and Refinishing.	9/11/2008	8/11/2010, 75 FR 48566.	
Section 12.0	Surface Coating of Plastic Parts	10/11/2011	9/25/2012, 77 FR 58953.	
Section 13.0	Automobile and Light-Duty Truck Coating Operations.	3/11/2011	4/13/2012, 77 FR 22224.	
Section 14.0	Can Coating	9/11/2008	8/11/2010, 75 FR 48566.	
Section 15.0	Coil Coating	9/11/2008	8/11/2010, 75 FR 48566.	
Section 16.0	Paper Coating	3/11/2011	4/13/2012, 77 FR 22224	Amended to add ''film and foil coating'' to the regulated category.
Section 17.0	Fabric Coating	9/11/2008	8/11/2010, 75 FR 48566.	
Section 18.0	Vinyl Coating	9/11/2008	8/11/2010, 75 FR 48566.	
Section 19.0	Coating of Metal Furniture	10/11/2011	9/25/2012, 77 FR 58953.	
Section 20.0	Coating of Large Appliances	10/11/2011	9/25/2012, 77 FR 58953.	
Section 21.0	Coating of Magnet Wire	9/11/2008	8/11/2010, 75 FR 48566.	
Section 22.0	Coating of Miscellaneous Metal Parts.	10/11/2011	9/25/2012, 77 FR 58953.	
Section 23.0	Coating of Flat Wood Panelling	3/11/2011	4/13/2012, 77 FR 22224.	
Section 24.0	Bulk Gasoline Plants	9/11/2008	8/11/2010, 75 FR 48566.	
Section 25.0	Bulk Gasoline Terminals	9/11/2008	8/11/2010, 75 FR 48566.	
Section 26.0	Gasoline Dispensing Facility—Stage I Vapor Recovery.	9/11/2008	8/11/2010, 75 FR 48566.	
Section 27.0	Gasoline Tank Trucks	9/11/2008	8/11/2010, 75 FR 48566.	
Section 28.0	Petroleum Refinery Sources	9/11/2008	8/11/2010, 75 FR 48566.	
Section 29.0	Leaks from Petroleum Refinery Equipment.	9/11/2008	8/11/2010, 75 FR 48566.	
Section 30.0	Petroleum Liquid Storage in External Floating Roof Tanks.	9/11/2008	8/11/2010, 75 FR 48566.	
Section 31.0	Petroleum Liquid Storage in Fixed Roof Tanks.	9/11/2008	8/11/2010, 75 FR 48566.	
Section 32.0	Leaks from Natural Gas/Gasoline Processing Equipment.	9/11/2008	8/11/2010, 75 FR 48566.	
Section 33.0	Solvent Metal Cleaning and Drying	9/11/2008	8/11/2010, 75 FR 48566.	
Section 34.0	Cutback and Emulsified Asphalt	9/11/2008	8/11/2010, 75 FR 48566.	
Section 35.0	Manufacture of Synthesized Pharmaceutical Products.	9/11/2008	8/11/2010, 75 FR 48566.	
Section 36.0	Stage II Vapor Recovery	9/11/2008	8/11/2010, 75 FR 48566.	
Section 37.0	Graphic Arts Systems	3/11/2011	4/13/2012 77 FR 22224	Amended to add ''flexible packaging printing'' to the regulated category.
Section 38.0	Petroleum Solvent Dry Cleaners	9/11/2008	8/11/2010, 75 FR 48566.	
Section 40.0	Leaks from Synthetic Organic Chemical, Polymer, and Resin Manufacturing Equipment.	9/11/2008	8/11/2010, 75 FR 48566.	
Section 41.0	Manufacture of High-Density Polyethylene, Polypropylene and Polystyrene Resins.	9/11/2008	8/11/2010, 75 FR 48566.	
Section 42.0	Air Oxidation Processes in the Synthetic Organic Chemical Manufacturing Industry.	9/11/2008	8/11/2010, 75 FR 48566.	
Section 43.0	Bulk Gasoline Marine Tank Vessel Loading Facilities.	9/11/2008	8/11/2010, 75 FR 48566.	
Section 44.0	Batch Processing Operations	9/11/2008	8/11/2010, 75 FR 48566.	
Section 45.0	Industrial Cleaning Solvents	3/11/2011	4/13/2012, 77 FR 22224.	
Section 46.0	Crude Oil Lightering Operations	9/11/2008	8/11/2010, 75 FR 48566.	
Section 47.0	Offset Lithographic Printing and Letterpress Printing.	4/11/2011	11/25/2011, 76 FR 72626	Amendments to Sections 47.1 through 47.6 to include control requirements for letterpress printing.
Section 48.0	Reactor Processes and Distillation Operations in the Synthetic Organic Chemical Manufacturing Industry.	9/11/2008	8/11/2010, 75 FR 48566.	

EPA-APPROVED REGULATIONS AND STATUTES IN THE DELAWARE SIP—Continued

State regulation (7 DNREC 1100)	Title/subject	State effective date	EPA approval date	Additional explanation
Section 49.0	Control of Volatile Organic Compound Emissions from Volatile Organic Liquid Storage Vessels.	9/11/2008	8/11/2010, 75 FR 48566.	
Section 50.0	Other Facilities that Emit Volatile Organic Compounds (VOCs).	9/11/2008	8/11/2010, 75 FR 48566	The SIP effective date for former Sections 50(a)(5) and 50(b)(3) is 5/1/98.
Appendix A	Test Methods and Compliance Procedures: General Provisions.	9/11/2008	8/11/2010, 75 FR 48566.	
Appendix B	Test Methods and Compliance Procedures: Determining the Volatile Organic Compound (VOC) Content of Coatings and Inks.	9/11/2008	8/11/2010, 75 FR 48566.	
Appendix C	Test Methods and Compliance Procedures: Alternative Compliance Methods for Surface Coating.	9/11/2008	8/11/2010, 75 FR 48566.	
Appendix D	Test Methods and Compliance Procedures: Emission Capture and Destruction or Removal Efficiency and Monitoring Requirements.	9/11/2008	8/11/2010, 75 FR 48566.	
Appendix E	Test Methods and Compliance Procedures: Determining the Destruction or Removal Efficiency of a Control Device.	9/11/2008	8/11/2010, 75 FR 48566.	
Appendix F	Test Methods and Compliance Procedures: Leak Detection Methods for Volatile Organic Compounds (VOCs).	9/11/2008	8/11/2010, 75 FR 48566.	
Appendix G	Performance Specifications for Continuous Emissions Monitoring of Total Hydrocarbons.	9/11/2008	8/11/2010, 75 FR 48566.	
Appendix H	Quality Control Procedures for Continuous Emission Monitoring Systems (CEMS).	9/11/2008	8/11/2010, 75 FR 48566.	
Appendix I	Method to Determine Length of Rolling Period for Liquid/Liquid Material Balance.	9/11/2008	8/11/2010, 75 FR 48566.	
Appendix K	Emission Estimation Methodologies	9/11/2008	8/11/2010, 75 FR 48566.	
Appendix L	Method to Determine Total Organic Carbon for Offset Lithographic Solutions.	9/11/2008	8/11/2010, 75 FR 48566.	
Appendix M	Test Method for Determining the Performance of Alternative Cleaning Fluids.	9/11/2008	8/11/2010, 75 FR 48566.	
1125 Requirements for Preconstruction Review				
Section 1.0	General Provisions	8/11/2012	2/28/2013, 78 FR 13496	Added definitions of "GHG" and "Subject to Regulation" under Section 1.9. Note: In section 1.9, the previous SIP-approved baseline dates for sulfur dioxide, particulate matter, and nitrogen dioxide in the definition of "Baseline Date" remain part of the SIP.
Section 2.0	Emission Offset Provisions (EOP) including sections 1.0 through 3.16.4.	2/11/12	10/2/12, 77 FR 60053	Added Section 2.2.5, 2.4.3.3 and 2.5.7.
	Sections 2.5.5 and 2.5.6	9/11/2013	10/20/2016, 81 FR 72529	Disapproval. See 40 CFR 52.433(a).

EPA-APPROVED REGULATIONS AND STATUTES IN THE DELAWARE SIP—Continued

State regulation (7 DNREC 1100)	Title/subject	State effective date	EPA approval date	Additional explanation
Section 3.0	Prevention of Significant Deterioration of Air Quality.	2/11/2012	10/2/2012, 77 FR 60053	Revised Section 3.2 and 3.7.7.1. Note: Previous SIP-approved revisions to Section 3.1 for nitrogen dioxide increments and Section 3.9A (now designated as Section 3.10.1) for air quality models remain part of the SIP.
1126 Motor Vehicle Emissions Inspection Program				
Section 1.0	Applicability and General Provisions	9/11/2008	8/11/2010, 75 FR 48566	Regulation 1126 provisions apply to Sussex County only, effective November 1, 1999.
Section 2.0	Definitions	9/11/2008	8/11/2010, 75 FR 48566.	
Section 3.0	Registration Requirement	9/11/2008	8/11/2010, 75 FR 48566.	
Section 4.0	Exemptions	9/11/2008	8/11/2010, 75 FR 48566.	
Section 5.0	Enforcement	9/11/2008	8/11/2010, 75 FR 48566.	
Section 6.0	Compliance, Waivers, Extensions of Time.	9/11/2008	8/11/2010, 75 FR 48566.	
Section 7.0	Inspection Facility Requirements	9/11/2008	8/11/2010, 75 FR 48566.	
Section 8.0	Certification of Motor Vehicle Officers.	9/11/2008	8/11/2010, 75 FR 48566.	
Section 9.0	Calibration and Test Procedures and Approved Equipment.	9/11/2008	8/11/2010, 75 FR 48566.	
Technical Memorandum 1.	Delaware Division of Motor Vehicles Vehicle Exhaust Emissions Test.	9/11/2008	8/11/2010, 75 FR 48566.	
Technical Memorandum 2.	(Motor Vehicle Inspection and Maintenance Program Emission Limit Determination).	9/11/2008	8/11/2010, 75 FR 48566.	
1127 Stack Heights				
Section 1.0	General Provisions	9/11/2008	8/11/2010, 75 FR 48566.	
Section 2.0	Definitions Specific to this Regulation.	9/11/2008	8/11/2010, 75 FR 48566.	
Section 3.0	Requirements for Existing and New Sources.	9/11/2008	8/11/2010, 75 FR 48566.	
Section 4.0	Public Notification	9/11/2008	8/11/2010, 75 FR 48566.	
Regulation No. 31 Low Enhanced Inspection and Maintenance Program				
Section 1	Applicability	10/11/2001	11/27/2003, 68 FR 66343.	
Section 2	Low Enhanced I/M Performance Standard.	10/11/2001	1/27/2003, 68 FR 66343.	
Section 3	Network Type and Program Evaluation.	10/11/2001	11/27/2003, 68 FR 66343.	
Section 4	Test Frequency and Convenience	6/11/1999	9/30/1999, 64 FR 52657.	
Section 5	Vehicle Coverage	10/11/2001	1/27/2003, 68 FR 66343.	
Section 6	Test Procedures and Standards	10/11/2001	11/27/2003, 68 FR 66343.	
Section 7	Waivers and Compliance via Diagnostic Inspection.	10/11/2001	11/27/2003, 68 FR 66343.	
Section 8	Motorist Compliance Enforcement	10/11/2001	11/27/2003, 68 FR 66343.	
Section 9	Enforcement Against Operators and Motor Vehicle Technicians.	10/11/2001	11/27/2003, 68 FR 66343.	
Section 10	Improving Repair Effectiveness	8/13/1998	9/30/1999, 64 FR 52657.	
Section 11	Compliance with Recall Notices	8/13/1998	9/30/1999, 64 FR 52657.	
Section 12	On-Road Testing	8/13/1998	9/30/1999, 64 FR 52657.	
Section 13	Implementation Deadlines	10/11/2001	11/27/2003, 68 FR 66343.	
Appendix 1(d)	Commitment to Extend the I/M Program to the Attainment Date From Secretary Tulou to EPA Administrator W. Michael McCabe.	8/13/1998	9/30/1999, 64 FR 52657.	
Appendix 3(a)(7)	Exhaust Emission Limits According to Model Year.	8/13/1998	9/30/1999, 64 FR 52657.	

EPA-APPROVED REGULATIONS AND STATUTES IN THE DELAWARE SIP—Continued

State regulation (7 DNREC 1100)	Title/subject	State effective date	EPA approval date	Additional explanation
Appendix 3(c)(2)	VMASTM Test Procedure	6/11/1999	9/30/1999, 64 FR 52657.	
Appendix 4(a)	Sections from Delaware Criminal and Traffic Law Manual.	8/13/1998	9/30/1999, 64 FR 52657.	
Appendix 5(a)	Division of Motor Vehicles Policy on Out of State Renewals.	8/13/1998	9/30/1999, 64 FR 52657.	
Appendix 5(f)	New Model Year Clean Screen	10/11/2001	11/27/2003, 68 FR 66343.	
Appendix 6(a)	Idle Test Procedure	10/11/2001	1/27/2003, 68 FR 66343.	
Appendix 6(a)(5)	Vehicle Emission Repair Report Form.	8/13/1998	9/30/1999, 64 FR 52657.	
Appendix 6(a)(8)	Evaporative System Integrity (Pressure) Test.	10/11/2001	11/27/2003, 68 FR 66343.	
Appendix 6(a)(9)	On-board Diagnostic Test Procedure OBD II Test Procedure.	10/11/2001	11/27/2003, 68 FR 66343.	
Appendix 7(a)	Emission Repair Technician Certification Process.	8/13/1998	9/30/1999, 64 FR 52657.	
Appendix 8(a)	Registration Denial System Requirements Definition.	8/13/1998	9/30/1999, 64 FR 52657.	
Appendix 9(a)	Enforcement Against Operators and Inspectors.	10/11/2001	11/27/2003, 68 FR 66343.	
1132 Transportation Conformity				
Introductory Paragraph.	[No Title]	9/11/2008	8/11/2010, 75 FR 48566	Replaces the Prologue.
Section 1.0	Purpose	11/11/2007	4/22/2008, 73 FR 21538.	
Section 2.0	Definitions	9/11/2008	8/11/2010, 75 FR 48566.	
Section 3.0	Consultation	9/11/2008	8/11/2010, 75 FR 48566.	
Section 4.0	Written Commitments For Control and Mitigation Measures.	9/11/2008	8/11/2010, 75 FR 48566.	
1135 Conformity of General Federal Actions to the State Implementation Plans				
Section 1.0	Purpose	9/11/2008	8/11/2010, 75 FR 48566.	
Section 2.0	Definitions	9/11/2008	8/11/2010, 75 FR 48566.	
Section 3.0	Applicability	9/11/2008	8/11/2010, 75 FR 48566.	
Section 4.0	Conformity Analysis	9/11/2008	8/11/2010, 75 FR 48566.	
Section 5.0	Reporting Requirements	9/11/2008	8/11/2010, 75 FR 48566.	
Section 6.0	Public Participation and Consultation.	9/11/2008	8/11/2010, 75 FR 48566.	
Section 7.0	Frequency of Conformity Determinations.	9/11/2008	8/11/2010, 75 FR 48566.	
Section 8.0	Criteria for Determining Conformity of General Federal Actions.	9/11/2008	8/11/2010, 75 FR 48566.	
Section 9.0	Procedures for Conformity Determinations of General Federal Actions.	9/11/2008	8/11/2010, 75 FR 48566.	
Section 10.0	Mitigation of Air Quality Impacts	9/11/2008	8/11/2010, 75 FR 48566.	
Section 11.0	Savings Provision	9/11/2008	8/11/2010, 75 FR 48566.	
Regulation No. 37 NO_X Budget Program				
Section 1	General Provisions	12/11/1999	3/9/2000, 65 FR 12481.	
Section 2	Applicability	12/11/1999	3/9/2000, 65 FR 12481.	
Section 3	Definitions	12/11/99	3/9/00 65 FR 12481.	
Section 4	Allowance Allocation	12/11/1999	3/9/2000, 65 FR 12481.	
Section 5	Permits	12/11/1999	3/9/2000, 65 FR 12481.	
Section 6	Establishment of Compliance Accounts.	12/11/1999	3/9/2000, 65 FR 12481.	
Section 7	Establishment of General Accounts	12/11/1999	3/9/2000, 65 FR 12481.	
Section 8	Opt In Provisions	12/11/1999	3/9/2000, 65 FR 12481.	
Section 9	New Budget Source Provisions	12/11/1999	3/9/2000, 65 FR 12481.	
Section 10	NO_X Allowance Tracking System (NATS).	12/11/1999	3/9/2000, 65 FR 12481.	
Section 11	Allowance Transfer	12/11/1999	3/9/2000, 65 FR 12481.	
Section 12	Allowance Banking	12/11/1999	3/9/2000, 65 FR 12481.	
Section 13	Emission Monitoring	12/11/1999	3/9/2000, 65 FR 12481.	
Section 14	Recordkeeping	12/11/1999	3/9/2000, 65 FR 12481.	
Section 15	Emissions Reporting	12/11/1999	3/9/2000, 65 FR 12481.	
Section 16	End-of Season Reconciliation	12/11/1999	3/9/2000, 65 FR 12481.	
Section 17	Compliance Certification	12/11/1999	3/9/2000, 65 FR 12481.	
Section 18	Failure to Meet Compliance Requirements.	12/11/1999	3/9/2000, 65 FR 12481.	

EPA-APPROVED REGULATIONS AND STATUTES IN THE DELAWARE SIP—Continued

State regulation (7 DNREC 1100)	Title/subject	State effective date	EPA approval date	Additional explanation
Section 19	Program Audit	12/11/1999	3/9/2000, 65 FR 12481.	
Section 20	Program Fees	12/11/1999	3/9/2000, 65 FR 12481.	
Appendix "A"	NO_X Budget Program	12/11/1999	3/9/2000, 65 FR 12481.	
1139 Nitrogen Oxides (NO_X) Budget Trading Program				
Section 1.0	Purpose	9/11/2008	8/11/2010, 75 FR 48566.	
Section 2.0	Emission Limitation	9/11/2008	8/11/2010, 75 FR 48566.	
Section 3.0	Applicability	9/11/2008	8/11/2010, 75 FR 48566.	
Section 4.0	Definitions	9/11/2008	8/11/2010, 75 FR 48566.	
Section 5.0	General Provisions	9/11/2008	8/11/2010, 75 FR 48566.	
Section 6.0	NO_X Authorized Account Representative for NO_X Budget Sources.	9/11/2008	8/11/2010, 75 FR 48566.	
Section 7.0	Permits	9/11/2008	8/11/2010, 75 FR 48566.	
Section 8.0	Monitoring and Reporting	9/11/2008	8/11/2010, 75 FR 48566.	
Section 9.0	NATS	9/11/2008	8/11/2010, 75 FR 48566.	
Section 10.0	NO_X Allowance Transfers	9/11/2008	8/11/2010, 75 FR 48566.	
Section 11.0	Compliance Certification	9/11/2008	8/11/2010, 75 FR 48566.	
Section 12.0	End-of-Season Reconciliation	9/11/2008	8/11/2010, 75 FR 48566.	
Section 13.0	Failure to Meet Compliance Requirements.	9/11/2008	8/11/2010, 75 FR 48566.	
Section 14.0	Individual Unit Opt-Ins	9/11/2008	8/11/2010, 75 FR 48566.	
Section 15.0	General Accounts	9/11/2008	8/11/2010, 75 FR 48566.	
Appendix A	Allowance Allocations to NO_X Budget Units under 3.1.1.1 and 3.1.1.2 of 7 DE Admin Code 1139.	9/11/2008	8/11/2010, 75 FR 48566.	
Appendix B	7 DE Admin Code 1137–7 DE Admin Code 1139 Program Transition.	9/11/2008	8/11/2010, 75 FR 48566.	
1140 Delaware Low Emission Vehicle Program				
Section 1.0	Purpose	12/11/2013	10/14/2015, 80 FR 61752.	
Section 2.0	Applicability	12/11/2013	10/14/2015, 80 FR 61752.	
Section 3.0	Definitions	12/11/2013	10/14/2015, 80 FR 61752.	
Section 4.0	Emission Certification Standards	12/11/2013	10/14/2015, 80 FR 61752.	
Section 5.0	New Vehicle Emission Requirements.	12/11/2013	10/14/2015, 80 FR 61752.	
Section 6.0	Manufacturer Fleet Requirements	12/11/2013	10/14/2015, 80 FR 61752.	
Section 7.0	Warranty	12/11/2013	10/14/2015, 80 FR 61752.	
Section 8.0	Reporting and Record-Keeping Requirements.	12/11/2013	10/14/2015, 80 FR 61752.	
Section 9.0	Enforcement	12/11/13	10/14/15, 80 FR 61752.	
Section 10.0	Incorporation by Reference	12/11/2013	10/14/2015, 80 FR 61752.	
Section 11.0	Document Availability	12/11/2013	10/14/2015, 80 FR 61752.	
Section 12.0	Severability	12/11/2013	10/14/2015, 80 FR 61752.	
1141 Limiting Emissions of Volatile Organic Compounds from Consumer and Commercial Products				
Section 1.0	Architectural and Industrial Maintenance Coatings.	9/11/2008	8/11/2010, 75 FR 48566.	
Section 2.0	Consumer Products	4/11/2009	10/20/2010, 75 FR 64673.	
Section 3.0	Portable Fuel Containers	4/11/2010	12/14/2010, 75 FR 77758.	
Section 4.0	Adhesives & Sealants	4/11/2009	*12/22/2011, 76 FR 79537*	Addition of VOC limits for adhesive and sealant products, including 25 adhesives, 4 adhesive primers, 5 sealants, and 3 sealant primers.
1142 Specific Emission Control Requirements				
Section 1.0	Control of NO_X Emissions from Industrial Boilers.	9/11/2008	8/11/2010, 75 FR 48566.	

EPA-APPROVED REGULATIONS AND STATUTES IN THE DELAWARE SIP—Continued

State regulation (7 DNREC 1100)	Title/subject	State effective date	EPA approval date	Additional explanation
Section 2.0	Control of NO_X Emissions from Industrial Boilers and Process Heaters at Petroleum Refineries.	4/11/2011	5/15/2012, 77 FR 28489	Addition of a NO_X emissions cap compliance alternative for the Delaware City Refinery.
1144 Control of Stationary Generator Emissions				
Section 1.0	General	9/11/2008	8/11/2010, 75 FR 48566.	
Section 2.0	Definitions	9/11/2008	8/11/2010, 75 FR 48566.	
Section 3.0	Emissions	9/11/2008	8/11/2010, 75 FR 48566.	
Section 4.0	Operating Requirements	1/11/2006	4/29/2008, 73 FR 23101.	
Section 5.0	Fuel Requirements	1/11/2006	4/29/2008, 73 FR 23101.	
Section 6.0	Record Keeping and Reporting	1/11/2006	4/29/2008, 73 FR 23101.	
Section 7.0	Emissions Certification, Compliance, and Enforcement.	9/11/2008	8/11/2010, 75 FR 48566.	
Section 8.0	Credit for Concurrent Emissions Reductions.	9/11/2008	8/11/2010, 75 FR 48566.	
Section 9.0	DVFA Member Companies	1/11/2006	4/29/2008 73 FR 23101.	
Regulation 1145 Excessive Idling of Heavy Duty Vehicles				
Section 1.0	Applicability	9/11/2008	8/11/2010, 75 FR 48566.	
Section 2.0	Definitions	9/11/2008	8/11/2010, 75 FR 48566.	
Section 3.0	Severability	9/11/2008	8/11/2010, 75 FR 48566.	
Section 4.0	Operational Requirements for Heavy Duty Motor Vehicles.	9/11/2008	8/11/2010, 75 FR 48566.	
Section 5.0	Exemptions	9/11/2008	8/11/2010, 75 FR 48566.	
Section 6.0	Enforcement and Penalty	9/11/2008	8/11/2010, 75 FR 48566.	
1146 Electric Generating Unit (EGU) Multi-Pollutant Regulation				
Section 1.0	Preamble	9/11/2008	8/11/2010, 75 FR 48566	Except for provisions pertaining to mercury emissions.
Section 2.0	Applicability	12/11/2006	8/28/2008, 73 FR 50723	Except for provisions pertaining to mercury emissions.
Section 3.0	Definitions	9/11/2008	8/11/2010, 75 FR 48566	Except for provisions pertaining to mercury emissions.
Section 4.0	NO_X Emissions Limitations	9/11/2008	8/11/2010, 75 FR 48566.	
Section 5.0	SO_2 Emissions Limitations	9/11/2008	8/11/2010, 75 FR 48566.	
Section 7.0	Recordkeeping and Reporting	9/11/2008	8/11/2010, 75 FR 48566	Except for provisions pertaining to mercury emissions.
Section 8.0	Compliance Plan	9/11/2008	8/11/2010, 75 FR 48566	Except for provisions pertaining to mercury emissions.
Section 9.0	Penalties	9/11/2008	8/11/2010, 75 FR 48566	Except for provisions pertaining to mercury emissions.
Table 4–1 (Formerly Table I).	Annual NO_X Mass Emissions Limits	9/11/2008	8/11/2010, 75 FR 48566.	
Table 5–1 (Formerly Table II).	Annual SO_2 Mass Emissions Limits	9/11/2008 10/19/2009	3/16/2010 75 FR 12449	Modified emissions limit for Conectiv Edge Moor Unit 5.
1148 Control of Stationary Combustion Turbine Electric Generating Unit Emissions				
Section 1.0	Purpose	7/11/2007	11/10/2008 73 FR 66554.	
Section 2.0	Applicability	9/11/2008	8/11/2010, 75 FR 48566.	
Section 3.0	Definitions	9/11/2008	8/11/2010, 75 FR 48566.	
Section 4.0	NO_X Emissions Limitations	9/11/2008	8/11/2010, 75 FR 48566.	
Section 5.0	Monitoring and Reporting	9/11/2008	8/11/2010, 75 FR 48566.	
Section 6.0	Recordkeeping	7/11/2007	11/10/2008 73 FR 66554.	
Section 7.0	Penalties	9/11/2008	8/11/2010, 75 FR 48566.	

EPA-APPROVED REGULATIONS AND STATUTES IN THE DELAWARE SIP—Continued

State regulation (7 DNREC 1100)	Title/subject	State effective date	EPA approval date	Additional explanation
Chapter 58 Laws Regulating the Conduct of Officers and Employees of the State				
Subpart I State Employees', Officers' and Officials' Code of Conduct				
Section 5804	Definitions	12/4/2012	4/17/2013, 78 FR 22785.	
Section 5805	Prohibitions relating to conflicts of interest.	12/4/2012	4/17/2013, 78 FR 22785	Paragraphs (a), (b), (c), (f), (g), (h).
Section 5806	Code of conduct	12/4/2012	4/17/2013, 78 FR 22785	Paragraphs (c) and (d).
Subpart II Financial disclosure				
Section 5812	Definitions	12/4/2012	4/17/2013, 78 FR 22785.	
Section 5813	Report disclosing financial information.	12/4/2012	4/17/2013, 78 FR 22785	Paragraphs (a), (b), (c) and (d).
Section 5813A	Report disclosing council and board membership.	12/4/2012	4/17/2013, 78 FR 22785	Paragraphs (a), and (b).
Section 5815	Violations; penalties; jurisdiction of Superior Court.	12/4/2012	4/17/2013, 78 FR 22785	Paragraphs (a), (b), (c) and (d).

(d) *EPA-approved State source-specific requirements.*

EPA-APPROVED DELAWARE SOURCE-SPECIFIC REQUIREMENTS

Name of source	Permit number	State effective date	EPA approval date	Additional explanation
Getty Oil Co	75–A–4	8/5/1975	3/7/1979, 44 FR 12423	§ 52.420(c)(11).
Phoenix Steel Co.—Electric Arc Furnaces Charging & Tapping #2.	77–A–8	12/2/1977	7/30/1979, 44 FR 25223	§ 52.420(c)(12).
Delmarva Power & Light—Indian River.	89–A–7/APC 89/197	2/15/1989	1/22/1990, 55 FR 2067	§ 52.420(c)(38).
Citisteel	Secretary's Order No. 2000–A–0033.	7/11/2000	6/14/2001, 66 FR 32231	Electric Arc Furnace—Approved NO_X RACT Determination
Delaware City Refinery Company.	Secretary's Order No. 2014–A–0014.	7/18/2014	12/8/2017, 82 FR 57849	(1) Fluid-coking unit (FCU) (2) fluid-catalytic-cracking unit (FCCU)—Approved Nitrogen Oxide Reasonably Available Control Technology Determinations.

(e) *EPA-approved non-regulatory and quasi-regulatory material.*

Name of non-regulatory SIP revision	Applicable geographic area	State submittal date	EPA approval date	Additional explanation
Commitment to adopt a clean fuel fleet program.	Philadelphia-Wilmington-Trenton Ozone Nonattainment Area.	2/26/1993	9/29/1993, 58 FR 50846	52.422(b).
1990 Base Year Emissions Inventory.	Philadelphia-Wilmington-Trenton Ozone Nonattainment Area.	5/27/1994	1/24/1996, 61 FR 1838	52.423, VOC, CO, NO_X.
15% Rate of Progress Plan.	Philadelphia-Wilmington-Trenton Ozone Nonattainment Area.	2/17/1995	10/12/1999, 64 FR 55139	52.426(a).
Post-1996 Rate of Progress Plan & contingency measures.	Philadelphia-Wilmington-Trenton Ozone Nonattainment Area.	12/29/1997, 6/17/1999, 2/3/2000, 12/20/2000	10/29/2001, 66 FR 54598	52.426(b).
Ozone Attainment Plan Demonstration & enforceable commitments.	Philadelphia-Wilmington-Trenton Ozone Nonattainment Area.	5/22/1998, 10/8/1998, 1/24/2000, 12/20/2000, 10/9/2001, 10/29/2001	10/29/2001, 66 FR 54598	52.426(c).
		9/2/2003	12/5/2003, 68 FR 67948	

Name of non-regulatory SIP revision	Applicable geographic area	State submittal date	EPA approval date	Additional explanation
Mobile budgets	Kent & New Castle Counties	1/5/1998 (rec'd); 5/28/1998 (rec'd); 2/3/2000, 12/20/2000	10/29/2001, 66 FR 54598	52.426(d), (e).
		9/2/2003	12/5/2003, 68 FR 67948	
Photochemical Assessment Monitoring Stations (PAMS) Program.	Philadelphia-Wilmington-Trenton Ozone Nonattainment Area.	3/24/1994	9/11/1995, 60 FR 47081	52.430.
Small Business stationary source technical and environmental compliance assistance program.	Statewide	5/16/1995	5/17/1994, 59 FR 25771	52.460.
Commitment to establish an ambient air quality monitoring network.	Statewide	3/19/1980	5/15/1981, 46 FR 26767	52.465(c)(15).
Commitment to use available grants and funds to provide for basic transportation needs.	New Castle County	8/15/1979	9/30/1981, 46 FR 47777	52.465(c)(19).
Executive order pertaining to financial disclosures by State officials [CAA Section 128].	Statewide	8/7/1978	9/29/1981, 46 FR 47544	52.465(c)(22).
Lead (Pb) SIP	Statewide	12/23/1980	9/10/1981, 46 FR 45160	52.465(c)(24).
Procedures to notify EPA of PSD sources locating within 100 km of a Class I PSD area.	Statewide	2/27/1981	3/15/1982, 47 FR 11014	52.465(c)(29).
RACT under the 8-Hour NAAQS.	Delaware (Statewide)	10/2/2006	7/23/2008, 73 FR 42681	
Reasonable Further Progress Plan (RFP), Reasonably Available Control Measures, and Contingency Measures.	Delaware portion of the Philadelphia 1997 8-hour ozone moderate nonattainment area.	6/13/2007	4/8/2010, 75 FR 17863.	
2002 Base Year Inventory for VOC, NO_X, and CO.	Delaware portion of the Philadelphia 1997 8-hour ozone moderate nonattainment area.	6/13/2007	4/8/2010, 75 FR 17863.	
2008 RFP Transportation Conformity Budgets.	Delaware portion of the Philadelphia 1997 8-hour ozone moderate nonattainment area.	6/13/2007	4/8/2010, 75 FR 17863.	
Regional Haze Plan	Statewide	9/25/2008	7/19/2011, 76 FR 42549.	
Section 110(a)(2) Infrastructure Requirements for the 1997 8-Hour Ozone NAAQS.	Statewide	12/13/2007 9/19/2008 9/16/2009	8/4/2011, 76 FR 47068	This action addresses the following CAA elements: 110(a)(2)(A), (B), (C), (D)(ii), (E), (F), (G), (H), (J), (K), (L), and (M) or portions thereof.
	Statewide	12/13/2007 9/19/2008 9/16/2009 4/1/2010	11/6/2012, 77 FR 66543	This action addresses the following CAA elements: 110(a)(2)(D)(i)(II) or portions thereof.

Name of non-regulatory SIP revision	Applicable geographic area	State submittal date	EPA approval date	Additional explanation
Section 110(a)(2) Infrastructure Requirements for the 1997 $PM_{2.5}$ NAAQS.	Statewide	12/13/2007 3/12/2008 9/16/2009 3/10/2010	8/4/2011, 76 FR 47068	This action addresses the following CAA elements: 110(a)(2)(A), (B), (C), (D)(ii), (E), (F), (G), (H), (J), (K), (L), and (M) or portions thereof.
	Statewide	12/13/2007 3/12/2008 9/16/2009 3/14/2012	11/6/2012, 77 FR 66543	This action addresses the following CAA elements: 110(a)(2)(D)(i)(II) or portions thereof.
Section 110(a)(2) Infrastructure Requirements for the 2006 $PM_{2.5}$ NAAQS.	Statewide	9/16/2009 3/10/2010	8/4/2011, 76 FR 47068	This action addresses the following CAA elements: 110(a)(2)(A), (B), (C), (D)(ii), (E), (F), (G), (H), (J), (K), (L), and (M), or portions thereof.
	Statewide	9/16/2009 3/14/12	11/6/2012, 77 FR 66543	This action addresses the following CAA elements: 110(a)(2)(D)(i)(II) or portions thereof.
Infrastructure element 110(a)(2)(D)(i)(I) related to interstate transport.	Statewide	9/16/2009; 4/27/2011	8/29/2011, 76 FR 53638.	
Section 110(a)(2) Infrastructure Requirements for the 2012 $PM_{2.5}$ NAAQS.	Statewide	12/14/2015	9/22/2017, 82 FR 44318	This action addresses the following CAA elements: 110(a)(2)(A), (B), (C), (D)(i)(II), (D)(ii), (E), (F), (G), (H), (J), (K), (L), and (M).
Section 110(a)(2) Infrastructure Requirements for the 2008 Lead NAAQS.	Statewide	10/17/2011	9/10/2012, 77 FR 55420	This action addresses the following CAA elements: 110(a)(2)(A), (B), (C), (D), (E), (F), (G), (H), (J), (K), (L), and (M) or portions thereof.
	Statewide	10/17/2011 3/14/2012	11/6/2012, 77 FR 66543	This action addresses the following CAA elements: 110(a)(2)(C), (D)(i)(II), and (J) or portions thereof.
Attainment Demonstration for the 1997 8-Hour Ozone National Ambient Air Quality Standard and its Associated Motor Vehicle Emissions Budgets.	Delaware-Philadelphia-Wilmington-Atlantic City Moderate Nonattainment Area.	06/13/2007	10/05/2012, 77 FR 60914.	
2002 Base Year Emissions Inventory for the 1997 annual fine particulate matter ($PM_{2.5}$) standard.	Delaware-Philadelphia-Wilmington, Pennsylvania-New Jersey-Delaware nonattainment area.	4/3/2008	3/4/2013, 78 FR 14020	52.423(c)

Name of non-regulatory SIP revision	Applicable geographic area	State submittal date	EPA approval date	Additional explanation
CAA sections 128 and 110(a)(2)(E)(ii) requirements in relation to State Boards for all criteria pollutants.	Statewide	1/11/2013	4/17/2013, 78 FR 22785.	
Section 110(a)(2) Infrastructure Requirements for the 2010 NO_2 NAAQS.	Statewide	3/27/2013	10/25/2013, 78 FR 63877	This action addresses the following CAA elements: 110(a)(2)(A), (B), (C), (D), (E), (F), (G), (H), (J), (K), (L), and (M).
1997 Annual $PM_{2.5}$ Attainment Plan for Delaware and the Motor Vehicle Emission Budgets for 2009 and 2012.	Delaware—Philadelphia-Wilmington, Pennsylvania-New Jersey-Delaware Nonattainment Area.	4/3/2008 4/25/2012	12/17/2013, 78 FR 76209	See § 52.427(c).
Section 110(a)(2) Infrastructure Requirements for the 2010 SO_2 NAAQS.	Statewide	5/29/2013	1/22/2014, 79 FR 3506	This rulemaking action addresses the following CAA elements: 110(a)(2)(A), (B), (C), (D)(i)(II), (D)(ii), (E), (F), (G), (H), (J), (K), (L), and (M).
Section 110(a)(2) Infrastructure Requirements for the 2008 Ozone NAAQS.	Statewide	3/27/2013	4/3/2014, 79 FR 18644	This action addresses the following CAA elements: 110(a)(2)(A), (B), (C), (D)(i)(II), (D)(ii), (E), (F), (G), (H), (J), (K), (L), and (M).
Section 110(a)(2) Infrastructure Requirements for the 2008 Ozone NAAQS.	Statewide	3/27/2013	3/23/2018, 83 FR 12669	This action addresses CAA element 110(a)(2)(D)(i)(I).
Regional Haze Five-Year Progress Report.	Statewide	9/24/2013	5/5/2014, 79 FR 25506.	
Maintenance plan contained in ''Delaware Redesignation Request and Maintenance Plan Under the 1997 Annual $PM_{2.5}$ National Ambient Air Quality Standard For the New Castle County Portion of the Philadelphia-Wilmington, PA–NJ–DE Nonattainment Area for Fine Particles,'' dated November 27, 2012.	New Castle County	12/12/2012	8/5/2014, 79 FR 45350	See § 52.427(d).
Maintenance plan contained in ''Delaware Redesignation Request and Maintenance Plan Under the 2006 Daily $PM_{2.5}$ National Ambient Air Quality Standard For the New Castle County Portion of the Philadelphia-Wilmington, PA–NJ–DE Nonattainment Area for Fine Particles,'' dated November 27, 2012.	New Castle County	12/12/2012	8/5/2014, 79 FR 45350	See § 52.427(e).

Name of non-regulatory SIP revision	Applicable geographic area	State submittal date	EPA approval date	Additional explanation
2011 Base Year Inventories for the 2008 8-Hour Ozone National Ambient Air Quality Standard.	New Castle and Sussex Counties.	4/23/2015	10/1/2015, 80 FR 59052	§ 52.423(e).
Reasonably Available Control Technology under 2008 8-hour ozone National Ambient Air Quality Standard.	Statewide	5/4/2015	12/8/2017, 82 FR 57849.	

[63 FR 67410, Dec. 7, 1998]

EDITORIAL NOTE: For FEDERAL REGISTER citations affecting § 52.420, see the List of CFR Sections Affected, which appears in the Finding Aids section of the printed volume and at *www.fdsys.gov*.

§ 52.421 Classification of regions.

The Delaware plan was evaluated on the basis of the following classifications:

Air quality control region	Pollutant				
	Particulate matter	Sulfur oxides	Nitrogen dioxide	Carbon monoxide	Photochemical oxidants (hydrocarbons)
Metropolitan Philadelphia Interstate	I	I	III	I	I
Southern Delaware Intrastate	III	III	III	III	III

[37 FR 10856, May 31, 1972, as amended at 39 FR 16345, May 8, 1974]

§ 52.422 Approval status.

(a) With the exceptions set forth in this subpart, the Administrator approves Delaware's plan for the attainment and maintenance of the national standards under section 110 of the Clean Air Act. Furthermore, the Administrator finds that the plan satisfies all requirements of part D, title 1, of the Clean Air Act as amended in 1977.

(b) Letter of February 26, 1993, from the Delaware Department of Natural Resources and Environmental Control transmitting a commitment to adopt either the Federal clean fuel fleet program or an alternative substitute program by May 15, 1994.

[45 FR 14558, Mar. 6, 1980, as amended at 58 FR 50848, Sept. 29, 1993; 78 FR 33984, June 6, 2013]

§ 52.423 Base year emissions inventory.

EPA approves as a revision to the Delaware State Implementation Plan the 1990 base year emission inventories for the Delaware ozone nonattainment areas submitted by the Secretary of the Department of Natural Resources and Environmental Control on May 27, 1994. This submittal consists of the 1990 base year point, area, non-road mobile, biogenic and on-road mobile source emission inventories in area for the following pollutants: volatile organic compounds (VOC), carbon monoxide (CO), and oxides of nitrogen (NO_X).

(a) [Reserved]

(b) EPA approves as a revision to the Delaware State Implementation Plan the 2002 base year emissions inventories for the Delaware portion of the Philadelphia 1997 8-hour ozone moderate nonattainment area submitted by the Secretary of the Department of Natural Resources and Environmental Control on June 13, 2007. This submittal consists of the 2002 base year point, area, non-road mobile, and on-road mobile source inventories in area for the following pollutants: Volatile organic compounds (VOC), carbon monoxide (CO) and nitrogen oxides (NO_X).

(c) EPA approves as a revision to the Delaware State Implementation Plan for the 2002 base year emissions inventory for the Delaware 1997 annual fine particulate matter ($PM_{2.5}$) nonattainment area submitted by the Delaware Department of Natural Resources and Environmental Control on April 3, 2008. The 2002 base year emissions inventory includes emissions estimates that cover the general source categories of point sources, non-road mobile sources, area sources, on-road mobile sources, and biogenic sources. The pollutants that comprise the inventory are nitrogen oxides (NO_X), volatile organic compounds (VOCs), $PM_{2.5}$, coarse particles (PM_{10}), ammonia (NH_3), and sulfur dioxide (SO_2).

(d) EPA approves as a revision to the Delaware State Implementation Plan the comprehensive emissions inventory for the Delaware portion of the Philadelphia-Wilmington, PA–NJ–DE 2006 24-hour fine particulate matter ($PM_{2.5}$) nonattainment area submitted by the Delaware Department of Natural Resources and Environmental Control on December 12, 2012. The 2007 year emissions inventory includes emissions estimates that cover the general source categories of point sources, non-road mobile sources, area sources, on-road mobile sources, and biogenic sources for New Castle County, Delaware. The pollutants that comprise the inventory are nitrogen oxides (NO_X), volatile organic compounds (VOCs), $PM_{2.5}$, ammonia (NH_3), and sulfur dioxide (SO_2).

(e) EPA approves as a revision to the Delaware State Implementation Plan the 2011 base year emissions inventory for New Castle and Sussex Counties for the 2008 8-hour ozone national ambient air quality standard submitted by the Delaware Department of the Natural Resources and Environmental Control on April 23, 2015. The 2011 base year emissions inventory includes emissions estimates that cover the general source categories of point sources, nonroad mobile sources, area sources, onroad mobile sources, and biogenic sources. The pollutants that comprise the inventory are nitrogen oxides (NO_X), volatile organic compounds (VOC), and carbon monoxide (CO).

[61 FR 1841, Jan. 24, 1996, as amended at 75 FR 17865, Apr. 8, 2010; 78 FR 14022, Mar. 4, 2013; 79 FR 45353, Aug. 5, 2014; 80 FR 59054, Oct. 1, 2015]

§ 52.424 Conditional approval.

(a)–(d) [Reserved]

[62 FR 27197, May 19, 1997, as amended at 63 FR 1368, Jan. 9, 1998; 63 FR 16435, Apr. 3, 1998; 64 FR 32189, June 16, 1999; 64 FR 52660, Sept. 30, 1999; 64 FR 55141, Oct. 12, 1999; 66 FR 9211, Feb. 7, 2001; 66 FR 32234, June 14, 2001]

§ 52.425 Determinations of attainment.

(a) Based upon EPA's review of the air quality data for the 3-year period 2008 to 2010, EPA determined that Philadelphia-Wilmington-Atlantic City, PA–NJ–MD–DE 8-hour ozone moderate nonattainment area (the Philadelphia Area) attained the 1997 8-hour ozone National Ambient Air Quality Standard (NAAQS) by the applicable attainment date of June 15, 2011. Therefore, EPA has met the requirement pursuant to CAA section 181(b)(2)(A) to determine, based on the area's air quality as of the attainment date, whether the area attained the standard. EPA also determined that the Philadelphia Area nonattainment area will not be reclassified for failure to attain by its applicable attainment date under section 181(b)(2)(A).

(b) Based upon EPA's review of the air quality data for the 3-year period 2007 to 2009, EPA determined that the Philadelphia-Wilmington, PA-NJ-DE fine particle ($PM_{2.5}$) nonattainment area attained the 1997 annual $PM_{2.5}$ National Ambient Air Quality Standard (NAAQS) by the applicable attainment date of April 5, 2010. Therefore, EPA has met the requirement pursuant to CAA section 179(c) to determine, based on the area's air quality as of the attainment date, whether the area attained the standard. EPA also determined that the Philadelphia-Wilmington, PA-NJ-DE $PM_{2.5}$ nonattainment area is not subject to the consequences of failing to attain pursuant to section 179(d).

(c) The EPA has determined, as of June 3, 2016, that based on 2012 to 2014 ambient air quality data, the Seaford, DE 2008 ozone Marginal nonattainment

area has attained the 2008 ozone NAAQS by the applicable attainment date of July 20, 2015. Therefore, the EPA has met the requirement pursuant to CAA section 181(b)(2)(A) to determine, based on the area's air quality data as of the attainment date, whether the area attained the standard. The EPA also determined that the Seaford nonattainment area will not be reclassified for failure to attain by its applicable attainment date under section 181(b)(2)(A).

(d) Based upon EPA's review of the air quality data for the 3-year period 2013 to 2015, Philadelphia-Wilmington-Atlantic City, PA-NJ-MD-DE marginal ozone nonattainment area has attained the 2008 8-hour ozone national ambient air quality standard (NAAQS) by the applicable attainment date of July 20, 2016. Therefore, EPA has met the requirement pursuant to CAA section 181(b)(2)(A) to determine, based on the area's air quality as of the attainment date, whether the area attained the standard. EPA also determined that the Philadelphia-Wilmington-Atlantic City, PA-NJ-MD-DE marginal ozone nonattainment area will not be reclassified for failure to attain by its applicable attainment date pursuant to section 181(b)(2)(A).

[77 FR 17343, Mar. 26, 2012, as amended at 77 FR 28784, May 16, 2012; 81 FR 26709, May 4, 2016; 82 FR 50819, Nov. 2, 2017]

§ 52.426 Control strategy plans for attainment and rate-of-progress: ozone.

(a) EPA fully approves, as a revision to the Delaware State Implementation Plan, the 15 Percent Rate of Progress Plan for the Delaware portion of the Philadelphia-Wilmington-Trenton severe ozone nonattainment, namely Kent and New Castle Counties, submitted by the Secretary of Delaware Department of Natural Resources and Environmental Control on February 17, 1995.

(b)(1) EPA approves revisions to the Delaware State Implementation Plan consisting of the Post 1996 ROP plans for milestone years 1999, 2002, and 2005 for the Delaware portion of the Philadelphia-Wilmington-Trenton severe ozone nonattainment area, namely Kent and New Castle Counties. These revisions were submitted by the Secretary of Delaware Department of Natural Resources and Environmental Control on December 29, 1997, and revised on June 17, 1999, February 3, 2000, and December 20, 2000.

(2) EPA approves Delaware's contingency plans for failure to meet ROP in the Delaware portion of the Philadelphia-Wilmington-Trenton severe ozone nonattainment area, namely Kent and New Castle Counties, for milestone years 1999, 2002 and 2005. These revisions were submitted by the Secretary of Delaware Department of Natural Resources and Environmental Control on December 29, 1997, June 17, 1999, February 3, 2000, and December 20, 2000.

(c) EPA approves the attainment demonstration SIP for the Philadelphia-Wilmington-Trenton area submitted by the Secretary of the Delaware Department of Natural Resources and Environmental Control on May 22, 1998, and amended October 8, 1998, January 24, 2000, December 20, 2000, and October 9, 2001 including its RACM analysis and determination. EPA is approving the enforceable commitments made to the attainment plan for the Philadelphia-Wilmington-Trenton severe ozone nonattainment area submitted by the Secretary of Delaware Department of Natural Resources and Environmental Control on January 24, 2000 and December 20, 2000. The enforceable commitments are to:

(1) Submit measures by October 31, 2001 for additional emission reductions as required in the attainment demonstration test, and to revise the SIP and motor vehicle emissions budgets by October 31, 2001 if the additional measures affect the motor vehicle emissions inventory,

(2) [Reserved]

(3) Perform a mid-course review by December 31, 2003.

(d) EPA is approving the following mobile budgets, explicitly quantified as sub-budgets for each of Kent and New Castle Counties, of the Post 1996 ROP Plans and the 1–Hour Ozone Attainment Demonstration Plan:

TRANSPORTATION CONFORMITY EMISSION BUDGETS FOR THE DELAWARE PORTION OF THE PHILADELPHIA AREA

Type of control strategy SIP	Year	Kent County		New Castle County		Effective date of adequacy determination or SIP approval
		VOC	NO_X	VOC	NO_X	
Post-1996 ROP Plan	1999	7.55	11.17	22.49	29.41	April 29, 1999, (64 FR 31217, published June 10, 1999).
Post-1996 ROP Plan	2002	6.30	9.81	18.44	27.29	June 23, 2000, (65 FR 36440, published June 8, 2000).
Post-1996 ROP Plan	2005	4.84	7.90	14.76	22.92	May 2, 2001, (66 FR 19769, published April 17, 2001).
Attainment Demonstration	2005	5.14	8.42	15.08	21.28	SIP approval on December 5, 2003; Effective on February 3, 2004.

(1)–(2) [Reserved]

(e) EPA approves Delaware's revised 2005 VOC and NO_X motor vehicle emission budgets for the 1-hour ozone attainment plan for the Delaware portion of the Philadelphia-Wilmington-Trenton severe ozone nonattainment area as a SIP revision. The revisions were submitted by the Delaware Department of Natural Resources and Environmental Control on September 2, 2003. Submittal of these revised MOBILE6-based motor vehicle emissions budgets was a requirement of EPA's approval of the attainment demonstration under paragraph (c) of this section.

(f) Based upon EPA's review of the air quality data for the 3-year period 2003 to 2005, EPA has determined that the Philadelphia-Wilmington-Trenton severe 1-hour ozone nonattainment area attained the 1-hour ozone NAAQS by the applicable attainment date of November 15, 2005. EPA also has determined that the Philadelphia-Wilmington-Trenton severe 1-hour ozone nonattainment area is not subject to the imposition of the section 185 penalty fees.

(g) EPA approves revisions to the Delaware State Implementation Plan consisting of the 2008 reasonable further progress (RFP) plan, reasonably available control measures, and contingency measures for the Delaware portion of the Philadelphia 1997 8-hour ozone moderate nonattainment area submitted by the Secretary of the Department of Natural Resources and Environmental Control on June 13, 2007.

(h) EPA approves the following 2008 RFP motor vehicle emissions budgets (MVEBs) for the Delaware portion of the Philadelphia 1997 8-hour ozone moderate nonattainment area submitted by the Secretary of the Department of Natural Resources and Environmental Control on June 13, 2007:

TRANSPORTATION CONFORMITY EMISSIONS BUDGETS FOR THE DELAWARE PORTION OF THE PHILADELPHIA AREA FOR THE 2008 RATE OF PROGRESS PLAN

County	2008 Emissions (tons per day)		Effective date of adequacy determination or SIP approval
	VOC	NO_X	
Kent	4.14	9.68	January 5, 2009, (73 FR 77682), published December 19, 2008.
New Castle	10.61	21.35	
Sussex	7.09	12.86	
State Total	21.84	43.89	

(i) *Determination of attainment.* EPA has determined, as of March 26, 2012, that based on 2008 to 2010 ambient air quality data, Philadelphia-Wilmington-Atlantic City, PA–NJ–MD–DE 8-hour ozone moderate nonattainment area has attained the 1997 8-hour ozone NAAQS. This determination, in accordance with 40 CFR 51.918, suspends the requirements for this area to submit an attainment demonstration, associated reasonably available control measures, a reasonable further progress plan, contingency measures, and other planning SIPs related to attainment of the standard for as long as this area continues to meet the 1997 annual 8-hour ozone NAAQS.

[64 FR 55141, Oct. 12, 1999, as amended at 66 FR 54614, Oct. 29, 2001; 68 FR 67952, Dec. 5, 2003; 73 FR 43361, July 25, 2008; 75 FR 17865, Apr. 8, 2010; 77 FR 17343, Mar. 26, 2012]

§ 52.427 Control strategy: Particulate matter.

(a) *Determination of attainment.* EPA has determined, as of *May 16, 2012*, that based on 2007 to 2009 and 2008 to 2010 ambient air quality data, the Philadelphia-Wilmington, PA-NJ-DE nonattainment area has attained the 1997 annual $PM_{2.5}$ NAAQS. This determination, in accordance with 40 CFR 51.1004(c), suspends the requirements for this area to submit an attainment demonstration, associated reasonably available control measures, a reasonable further progress plan, contingency measures, and other planning SIPs related to attainment of the standard for as long as this area continues to meet the 1997 annual $PM_{2.5}$ NAAQS.

(*b) Determination of Attainment.* EPA has also determined, as of January 7, 2013, that based on 2008 to 2010 and 2009 to 2011 ambient air quality data, the Philadelphia-Wilmington, PA-NJ-DE fine particulate matter ($PM_{2.5}$) nonattainment area has attained the 2006 24-hour $PM_{2.5}$ national ambient air quality standards (NAAQS). This determination suspends the requirements for the State of DE to submit, for the Philadelphia-Wilmington, PA-NJ-DE $PM_{2.5}$ nonattainment area, an attainment demonstration, associated reasonably available control measures, a reasonable further progress plan, contingency measures, and other planning SIPs related to attainment of the standard for as long as this area continues to meet the 2006 24-hour $PM_{2.5}$ NAAQS.

(c) EPA approves the attainment plan for the 1997 annual fine particulate matter ($PM_{2.5}$) national ambient air quality standard (NAAQS) for the Philadelphia-Wilmington, Pennsylvania-New Jersey-Delaware nonattainment area submitted by the Secretary of the Delaware Department of Natural Resources and Environmental Control on April 3, 2008, as amended on April 25, 2012. The attainment plan includes the attainment demonstration and motor vehicle emission budgets in tons per year (tpy) used for transportation conformity purposes for New Castle County, Delaware. The attainment plan also includes an analysis of reasonably available control measures and reasonably available control technology, contingency measures and the 2002 base year emissions inventory. The 2002 base year emissions inventory was approved in a separate rulemaking action on March 4, 2013 (78 FR 10420).

DELAWARE'S MOTOR VEHICLE EMISSION BUDGETS FOR THE 1997 ANNUAL $PM_{2.5}$ NAAQS

Type of control strategy SIP	Year	VOC	NO_X
Attainment Plan (Milestone Year)	2009	257	8,448
Attainment Plan (Out Year)	2012	199	6,273

(d) EPA approves the maintenance plan for the Delaware portion of the Philadelphia-Wilmington, PA–NJ–DE $PM_{2.5}$ Nonattainment Area (New Castle County) for the 1997 annual fine particulate matter ($PM_{2.5}$) national ambient air quality standard (NAAQS) submitted by the Secretary of the Delaware Department of Natural Resources and Environmental Control on December 12, 2012. The maintenance plans include motor vehicle emission budgets in tons per year (tpy) used for transportation conformity purposes for New Castle County, Delaware.

NEW CASTLE COUNTY MOTOR VEHICLE EMISSIONS BUDGETS FOR THE 1997 ANNUAL $PM_{2.5}$ NAAQS

[tpy]

Type of control strategy SIP	Year	NO_X	$PM_{2.5}$	Effective date of SIP approval
Maintenance Plan	2017 Interim Budget	6,273	199	9/4/2014
	2025 Final Budget	6,273	199	

(e) EPA approves the maintenance plan for the Delaware portion of the Philadelphia-Wilmington, PA–NJ–DE $PM_{2.5}$ Nonattainment Area (New Castle County) for the 2006 24-hour fine particulate matter ($PM_{2.5}$) national ambient air quality standard (NAAQS) submitted by the Secretary of the Delaware Department of Natural Resources

and Environmental Control on December 12, 2012. The maintenance plans include motor vehicle emission budgets in tons per year (tpy) used for transportation conformity purposes for New Castle County, Delaware.

NEW CASTLE COUNTY MOTOR VEHICLE EMISSIONS BUDGETS FOR THE 2006 24-HOUR $PM_{2.5}$ NAAQS

[tpy]

Type of control strategy SIP	Year	NO_X	$PM_{2.5}$	Effective date of SIP approval
Maintenance Plan	2017 Interim Budget	6,273	199	9/4/2014
	2025 Final Budget	6,273	199	

[77 FR 28784, May 16, 2012, as amended at 78 FR 885, Jan. 7, 2013; 78 FR 76211, Dec. 17, 2013; 79 FR 45353, Aug. 5, 2014]

§§ 52.428–52.429 [Reserved]

§ 52.430 Photochemical Assessment Monitoring Stations (PAMS) Program.

On March 24, 1994 the Delaware Department of Natural Resources & Environmental Control submitted a plan for the establishment and implementation of a Photochemical Assessment Monitoring Stations (PAMS) Program as a state implementation plan (SIP) revision, as required by section 182(c)(1) of the Clean Air Act. EPA approved the Photochemical Assessment Monitoring Stations (PAMS) Program on September 11, 1995 and made it part of the Delaware SIP. As with all components of the SIP, Delaware must implement the program as submitted and approved by EPA.

[60 FR 47084, Sept. 11, 1995]

§ 52.431 [Reserved]

§ 52.432 Significant deterioration of air quality.

(a) [Reserved]

(b) Regulation for preventing significant deterioration of air quality. The provisions of 52.21(p) are hereby incorporated and made a part of the applicable State plan for the State of Delaware.

(c) All applications submitted as of that date and supporting information required pursuant to § 52.21 from sources located in the State of Delaware shall be submitted to: Delaware Department of Natural Resources and Environmental Control, Air Resources Section, Division of Environmental Control, 89 Kings Highway, P.O. Box 1401, Dover, Delaware 19901.

[78 FR 33984, June 6, 2013]

§ 52.433 Nonattainment new source review.

(a) *Disapproval.* EPA is disapproving Delaware's October 15, 2013 submittal of revisions to 7 DNREC 1125, sections 2.5.5 and 2.5.6 because it does not meet Clean Air Act (CAA) requirements which establish the criteria under which the owner or operator of a new or modified major stationary source must obtain the required emission offsets for the nonattainment new source review (NSR) preconstruction permitting program and because Delaware exercises authorities that are reserved for EPA under section 107 of the CAA. Delaware's Federally-approved nonattainment NSR preconstruction program in 7 DNREC 1125, sections 1.0 through 3.16.4, effective in Delaware on February 11, 2012, was fully-approved by EPA on October 2, 2012 and continues to apply.

(b) [Reserved]

[81 FR 72537, Oct. 20, 2016]

§ 52.440 Interstate pollutant transport provisions; What are the FIP requirements for decreases in emissions of nitrogen oxides?

(a)(1) The owner and operator of each source located within the State of Delaware and for which requirements are set forth under the Federal CAIR NO_X Annual Trading Program in subparts AA through II of part 97 of this chapter must comply with such applicable requirements. The obligation to comply with these requirements in

part 97 of this chapter will be eliminated by the promulgation of an approval by the Administrator of a revision to the Delaware State Implementation Plan (SIP) as meeting the requirements of CAIR for $PM_{2.5}$ relating to NO_X under § 51.123 of this chapter, except to the extent the Administrator's approval is partial or conditional or unless such approval is under § 51.123(p) of this chapter.

(2) Notwithstanding any provisions of paragraph (a)(1) of this section, if, at the time of such approval of the State's SIP, the Administrator has already allocated CAIR NO_X allowances to sources in the State for any years, the provisions of part 97 of this chapter authorizing the Administrator to complete the allocation of CAIR NO_X allowances for those years shall continue to apply, unless the Administrator approves a SIP provision that provides for the allocation of the remaining CAIR NO_X allowances for those years.

(b)(1) The owner and operator of each NO_X source located within the State of Delaware and for which requirements are set forth under the Federal CAIR NO_X Ozone Season Trading Program in subparts AAAA through IIII of part 97 of this chapter must comply with such applicable requirements. The obligation to comply with these requirements in part 97 of this chapter will be eliminated by the promulgation of an approval by the Administrator of a revision to the Delaware State Implementation Plan (SIP) as meeting the requirements of CAIR for ozone relating to NO_X under § 51.123 of this chapter, except to the extent the Administrator's approval is partial or conditional or unless such approval is under § 51.123(ee) of this chapter.

(2) Notwithstanding any provisions of paragraph (b)(1) of this section, if, at the time of such approval of the State's SIP, the Administrator has already allocated CAIR NO_X Ozone Season allowances to sources in the State for any years, the provisions of part 97 of this chapter authorizing the Administrator to complete the allocation of CAIR NO_X Ozone Season allowances for those years shall continue to apply, unless the Administrator approves a SIP provision that provides for the allocation of the remaining CAIR NO_X Ozone Season allowances for those years.

(c) Notwithstanding any provisions of paragraphs (a) and (b) of this section and subparts AA through II and AAAA through IIII of part 97 of this chapter to the contrary:

(1) With regard to any control period that begins after December 31, 2014,

(i) The provisions in paragraphs (a) and (b) of this section relating to NO_X annual or ozone season emissions shall not be applicable; and

(ii) The Administrator will not carry out any of the functions set forth for the Administrator in subparts AA through II and AAAA through IIII of part 97 of this chapter; and

(2) The Administrator will not deduct for excess emissions any CAIR NO_X allowances or CAIR NO_X Ozone Season allowances allocated for 2015 or any year thereafter;

(3) By March 3, 2015, the Administrator will remove from the CAIR NO_X Allowance Tracking System accounts all CAIR NO_X allowances allocated for a control period in 2015 and any subsequent year, and, thereafter, no holding or surrender of CAIR NO_X allowances will be required with regard to emissions or excess emissions for such control periods; and

(4) By March 3, 2015, the Administrator will remove from the CAIR NO_X Ozone Season Allowance Tracking System accounts all CAIR NO_X Ozone Season allowances allocated for a control period in 2015 and any subsequent year, and, thereafter, no holding or surrender of CAIR NO_X Ozone Season allowances will be required with regard to emissions or excess emissions for such control periods.

[72 FR 62344, Nov. 2, 2007, as amended at 76 FR 48362, Aug. 8, 2011; 79 FR 71671, Dec. 3, 2014]

§ 52.441 Interstate pollutant transport provisions; What are the FIP requirements for decreases in emissions of sulfur dioxide?

(a) The owner and operator of each SO_2 source located within the State of Delaware and for which requirements are set forth under the Federal CAIR SO_2 Trading Program in subparts AAA through III of part 97 of this chapter

must comply with such applicable requirements. The obligation to comply with these requirements in part 97 of this chapter will be eliminated by the promulgation of an approval by the Administrator of a revision to the Delaware State Implementation Plan as meeting the requirements of CAIR for $PM_{2.5}$ relating to SO_2 under § 51.124 of this chapter, except to the extent the Administrator's approval is partial or conditional or unless such approval is under § 51.124(r) of this chapter.

(b) Notwithstanding any provisions of paragraph (a) of this section and subparts AAA through III of part 97 of this chapter and any State's SIP to the contrary:

(1) With regard to any control period that begins after December 31, 2014,

(i) The provisions of paragraph (a) of this section relating to SO_2 emissions shall not be applicable; and

(ii) The Administrator will not carry out any of the functions set forth for the Administrator in subparts AAA through III of part 97 of this chapter; and

(2) The Administrator will not deduct for excess emissions any CAIR SO_2 allowances allocated for 2015 or any year thereafter.

[72 FR 62345, Nov. 2, 2007, as amended at 76 FR 48362, Aug. 8, 2011; 79 FR 71671, Dec. 3, 2014]

§ 52.460 Small business stationary source technical and environmental compliance assistance program.

(a) On January 11, 1993, the Director of the Delaware Department of Natural Resources and Environmental Control submitted a plan for the establishment and implementation of a Small Business Stationary Source Technical and Environmental Compliance Assistance Program as a State Implementation Plan revision, as required by title V of the Clean Air Act. EPA approved the Small Business Stationary Source Technical and Environmental Compliance Assistance Program on May 17, 1994, and made it a part of the Delaware SIP. As with all components of the SIP, Delaware must implement the program as submitted and approved by EPA.

[59 FR 25572, May 17, 1994]

§ 52.465 Original identification of plan section.

(a) This section identifies the original ''Air Implementation Plan for the State of Delaware'' and all revisions submitted by Delaware that were federally approved prior to July 1, 1998. The information in this section is available in the 40 CFR, part 52 edition revised as of July 1, 1999, the 40 CFR, part 52, Volume 1 of 2 (§§ 52.01 to 52.1018) editions revised as of July 1, 2000 through July 1, 2011, and the 40 CFR, part 52, Volume 1 of 3 (§§ 52.01 to 52.1018) editions revised as of July 1, 2012.

(b) [Reserved]

[78 FR 33984, June 6, 2013]

Subpart J—District of Columbia

§ 52.470 Identification of plan.

(a) *Purpose and scope.* This section sets forth the applicable State implementation plan for the District of Columbia under section 110 of the Clean Air Act (42 U.S.C. 7401) and 40 CFR part 51 to meet national ambient air quality standards.

(b) *Incorporation by reference.* (1) Material listed in paragraphs (c) and (d) of this section with an EPA approval date prior to July 1, 2016, was approved for incorporation by reference by the Director of the Federal Register in accordance with 5 U.S.C. 552(a) and 1 CFR part 51. Material is incorporated as it exists on the date of approval, and notice of any change in the material will be published in the FEDERAL REGISTER. Entries in paragraphs (c) and (d) of this section with the EPA approval dates after July 1, 2016 for the District of Columbia, will be incorporated by reference in the next update to the SIP compilation.

(2) EPA Region III certifies that the materials provided by EPA at the addresses in paragraph (b)(3) of this section are an exact duplicate of the officially promulgated state rules/regulations which have been approved as part of the state implementation plan as of the dates referenced in paragraph (b)(1). No additional revisions were made to paragraph (d) between December 1, 2010 and July 1, 2016.

(3) Copies of the materials incorporated by reference into the state implementation plan may be inspected at the Environmental Protection Agency, Region III, 1650 Arch Street, Philadelphia, Pennsylvania 19103. To obtain the material, please call the Regional Office at (215) 814–3376. You may also inspect the material with an EPA approval date prior to July 1, 2016 for the District of Columbia at the National Archives and Records Administration (NARA). For information on the availability of this material at NARA, go to: *http://www.archives.gov/federal-register/cfr/ibr-locations.html*.

(c) *EPA-approved regulations.*

EPA-APPROVED REGULATIONS AND STATUTES IN THE DISTRICT OF COLUMBIA SIP

State citation	Title/subject	State effective date	EPA approval date	Additional explanation
District of Columbia Municipal Regulations (DCMR), Title 20—Environment				
Chapter 1 General				
Section 100	Purpose, Scope and Construction	12/30/11	4/29/13, 78 FR 24992	Paragraph 100.4 is revised.
Section 101	Inspection	3/15/85	8/28/95, 60 FR 44431.	
Section 102	Orders for Compliance	3/15/85	8/28/95, 60 FR 44431.	
Section 104	Hearings	3/15/85	8/28/95, 60 FR 44431.	
Section 105	Penalty	3/15/85	8/28/95, 60 FR 44431.	
Section 106	Confidentiality of Reports	3/15/85	8/28/95, 60 FR 44431.	
Section 107	Control Devices or Practices	3/15/85	8/28/95, 60 FR 44431.	
Section 199	Definitions and Abbreviations	08/16/15	05/01/17, 82 FR 20270	Added two new definitions.
Section 8–2: 702	Definitions; Definition of "stack"	7/7/72	9/22/72, 37 FR 19806.	
Section 8–2: 724	Variances	7/7/72	9/22/72, 37 FR 19806.	
Chapter 2 General and Non-attainment Area Permits				
Section 200	General Permit Requirements	11/16/12	3/19/2015, 80 FR 14310.	
Section 201	General Requirements for Permit Issuance.	4/29/97	7/31/97, 62 FR 40937.	
Section 202	Modification, Revocation and Termination of Permits.	4/29/97	7/31/97, 62 FR 40937.	
Section 204	Permit Requirements for Sources Affecting Non-attainment Areas.	11/16/12	3/19/2015, 80 FR 14310.	Previous version of Section 204 is replaced in its entirety
Section 208	Plantwide Applicability Limit (PAL) Permits for Major Sources.	11/16/12	3/19/2015, 80 FR 14310.	Added
Section 210	Notice and Comment Prior to Permit Issuance.	11/16/12	3/19/2015, 80 FR 14310.	Added
Section 299	Definitions and Abbreviations	11/16/12	3/19/2015, 80 FR 14310.	
Section 8–2:720(c)	Permits to Construct or Modify; Permits to Operate.	7/7/72	9/22/72, 37 FR 19806	Requirement for Operating Permit.
Chapter 3 Operating Permits				
Section 307	Enforcement for Severe Ozone Nonattainment Areas.	4/16/04	12/28/04, 69 FR 77639	Provision allowing for the District to collect penalty fees from major stationary sources if the nonattainment area does not attain the ozone standard by the statutory attainment date.
Chapter 4 Ambient Monitoring, Emergency Procedures, and Chemical Accident Prevention				
Section 400	Air Pollution Reporting Index	3/15/85	8/28/95, 60 FR 44431.	
Section 401	Emergency Procedures	3/15/85	8/28/95, 60 FR 44431.	
Section 499	Definitions and Abbreviations	3/15/85	8/28/95, 60 FR 44431.	

EPA-APPROVED REGULATIONS AND STATUTES IN THE DISTRICT OF COLUMBIA SIP—Continued

State citation	Title/subject	State effective date	EPA approval date	Additional explanation
Chapter 5 Source Monitoring and Testing				
Sections 500.1 through 500.3.	Records and Reports	3/15/85	8/28/95, 60 FR 44431.	
Sections 500.4, 500.5.	Records and Reports	9/30/93	1/26/95, 60 FR 5134.	
Section 500.6	Records and Reports	9/30/93	10/27/99, 64 FR 57777.	
Section 500.7	Records and Reports—Emission Statements.	9/30/93	5/26/95, 60 FR 27944.	
Section 501	Monitoring Devices	3/15/85	8/28/95, 60 FR 44431.	
Sections 502.1 through 502.15.	Sampling, Tests, and Measurements.	08/16/15	05/01/17, 82 FR 20270	Updates to sampling and testing practices for fuel oils. Exceptions: Paragraphs 502.11, 502.12 and 502.14 are not part of the SIP.
Section 502.17	Sampling Tests, and Measurements.	09/30/93	10/27/99, 64 FR 57777.	
Section 502.18	Sampling, Tests and Measurements.	12/8/00	5/9/01, 66 FR 23614.	
Section 599	Definitions and Abbreviations	9/30/93	10/27/99, 64 FR 57777.	
Chapter 6 Particulates				
Section 600	Fuel-Burning Particulate Emissions.	4/16/04	12/28/04, 69 FR 77645	Revision to paragraph 600.1.
Section 601	Rotary Cup Burners	3/15/85	8/28/95, 60 FR 44431.	
Section 602	Incinerators	3/15/85	8/28/95, 60 FR 44431.	
Section 603	Particulate Process Emissions	3/15/85	8/28/95, 60 FR 44431.	
Section 604	Open Burning	3/15/85	8/28/95, 60 FR 44431.	
Section 605	Control of Fugitive Dust	3/15/85	8/28/95, 60 FR 44431.	
Section 606	Visible Emissions	3/15/85	8/28/95, 60 FR 44431.	
Section 699	Definitions and Abbreviations	3/15/85	8/28/95, 60 FR 44431.	
Chapter 7 Volatile Organic Compounds				
Section 700	Miscellaneous Volatile Organic Compounds.	12/30/11	4/29/13, 78 FR 24992	Title changed.
Section 701.1 through 701.13.	Storage of Petroleum Products	3/15/85	10/27/99, 64 FR 57777.	
Section 702	Control of Volatile Organic Compound Leaks from Petroleum Refinery Equipment.	3/15/85	10/27/99, 64 FR 57777.	
Section 703.2, 703.3.	Terminal Vapor Recovery—Gasoline or Volatile Organic Compound.	3/15/85	10/27/99, 64 FR 57777.	
Section 703.1, 703.4 through 703.7.	Terminal Vapor Recovery—Gasoline or Volatile Organic Compound.	9/30/93	10/27/99, 64 FR 57777.	
Section 704	Stage I Vapor Recovery	3/15/85	10/27/99, 64 FR 57777.	
Section 705.1 through 705.3.	Stage II Vapor Recovery	9/30/93	10/27/99, 64 FR 57777.	
Section 705.4 through 705.14.	Stage II Vapor Recovery	3/15/85	10/27/99, 64 FR 57777.	
Section 706	Petroleum Dry Cleaners	3/15/85	10/27/99, 64 FR 57777.	
Section 709	Asphalt Operations	3/15/85	10/27/99, 64 FR 57777.	
Section 710	Intaglio, Flexographic, and Rotogravure Printing.	12/30/11	4/29/13, 78 FR 24992.	
Section 711	Pumps and Compressors	3/15/85	10/27/99, 64 FR 57777.	
Section 712	Waste Gas Disposal from Ethylene Producing Plant.	3/15/85	10/27/99, 64 FR 57777.	
Section 713	Waste Gas Disposal from Vapor Blow-down Systems.	3/15/85	10/27/99, 64 FR 57777.	
Section 714	Control Techniques Guidelines	12/30/11	4/29/13, 78 FR 24992	Section Added.
Section 715	Major Source and Case-By-Case Reasonably Available Control Technology (RACT).	12/30/11	4/29/13, 78 FR 24992	Title Changed.
Section 716	Offset Lithography and Letterpress Printing.	12/30/11	4/29/13, 78 FR 24992	Title Changed.

EPA-APPROVED REGULATIONS AND STATUTES IN THE DISTRICT OF COLUMBIA SIP—Continued

State citation	Title/subject	State effective date	EPA approval date	Additional explanation
Section 718	Mobile Equipment Repair and Refinishing.	11/26/04	12/23/05, 69 FR 76855.	
Section 719	Consumer Products—General Requirements.	12/30/11	4/29/13, 78 FR 24992.	
Section 720	Consumer Products—VOC Standards.	12/30/11	4/29/13, 78 FR 24992.	
Section 721	Consumer Products—Exemptions from VOC Standards.	12/30/11	4/29/13, 78 FR 24992.	
Section 722	Consumer Products—Registered Under FIFRA.	12/30/11	4/29/13, 78 FR 24992.	
Section 723	Consumer Products—Products Requiring Dilution.	12/30/11	4/29/13, 78 FR 24992.	
Section 724	Consumer Products—Ozone Depleting Compounds.	12/30/11	4/29/13, 78 FR 24992.	
Section 725	Consumer Products—Aerosol Adhesives.	12/30/11	4/29/13, 78 FR 24992.	
Section 726	Consumer Products—Antiperspirants Or Deodorants.	12/30/11	4/29/13, 78 FR 24992.	
Section 727	Consumer Products—Contact Adhesives, Electronic Cleaners, Footwear And Leather Care Products, And General Purpose Degreasers.	12/30/11	4/29/13, 78 FR 24992	Title Changed.
Section 728	Consumer Products—Adhesive Removers, Electrical Cleaners, And Graffiti Removers.	12/30/11	4/29/13, 78 FR 24992	Title Changed.
Section 729	Consumer Products—Solid Air Fresheners And Toilet/Urinal Care Products.	12/30/11	4/29/13, 78 FR 24992	Title Changed.
Section 730	Consumer Products—Charcoal Lighter Materials.	12/30/11	4/29/13, 78 FR 24992	Title Changed.
Section 731	Consumer Products—Floor Wax Strippers.	12/30/11	4/29/13, 78 FR 24992	Title Changed.
Section 732	Consumer Products—Labeling Of Contents.	12/30/11	4/29/13, 78 FR 24992	Title Changed.
Section 733	Consumer Products—Reporting Requirements.	12/30/11	4/29/13, 78 FR 24992	Title Changed.
Section 734	Consumer Products—Test Methods.	12/30/11	4/29/13, 78 FR 24992	Title Changed.
Section 735	Consumer Products—Alternative Control Plans.	12/30/11	4/29/13, 78 FR 24992	Title Changed.
Section 736	Consumer Products—Innovative Products Exemption.	12/30/11	4/29/13, 78 FR 24992	Title Changed.
Section 737	Consumer Products—Variance Requests.	12/30/11	4/29/13, 78 FR 24992	Title Changed.
Section 743	Adhesives and Sealants—General Requirements.	12/30/11	4/29/13, 78 FR 24992	Title Changed.
Section 744	Adhesives and Sealants—VOC Standards.	12/30/11	4/29/13, 78 FR 24992	Title Changed.
Section 745	Adhesives and Sealants—Exemptions and Exceptions.	12/30/11	4/29/13, 78 FR 24992	Title Changed.
Section 746	Adhesives and Sealants—Administrative Requirements.	12/30/11	4/29/13, 78 FR 24992	Title Changed.
Section 747	Adhesives and Sealants—Compliance Procedures and Test Methods.	12/30/11	4/29/13, 78 FR 24992	Title Changed.
Section 748	Adhesives and Sealants—Container Labeling.	12/30/11	4/29/13, 78 FR 24992	Title Changed.
Section 749	Adhesives and Sealants—Application Methods.	12/30/11	4/29/13, 78 FR 24992	Title Changed.
Section 751	Portable Fuel Containers and Spouts—General Requirements.	12/30/11	4/29/13, 78 FR 24992	Title Changed.
Section 752	Portable Fuel Containers and Spouts—Performance Standards and Test Procedures.	12/30/11	4/29/13, 78 FR 24992	Title Changed.
Section 753	Portable Fuel Containers and Spouts—Exemptions.	12/30/11	4/29/13, 78 FR 24992	Title Changed.
Section 754	Portable Fuel Containers and Spouts—Labeling Requirements.	12/30/11	4/29/13, 78 FR 24992	Title Changed.

EPA-APPROVED REGULATIONS AND STATUTES IN THE DISTRICT OF COLUMBIA SIP—Continued

State citation	Title/subject	State effective date	EPA approval date	Additional explanation
Section 755	Portable Fuel Containers and Spouts—Certification and Compliance Test Procedures.	12/30/11	4/29/13, 78 FR 24992	Section Added.
Section 756	Portable Fuel Containers and Spouts—Enforcement.	12/30/11	4/29/13, 78 FR 24992	Section Added.
Section 757	Portable Fuel Containers and Spouts—Innovative Product Exemption.	12/30/11	4/29/13, 78 FR 24992	Section Added.
Section 758	Portable Fuel Containers and Spouts—Variance.	12/30/11	4/29/13, 78 FR 24992	Section Added.
Section 763	Solvent Cleaning—General Requirements.	12/30/11	4/29/13, 78 FR 24992	Section Added.
Section 764	Solvent Cleaning—Cold Cleaning	12/30/11	4/29/13, 78 FR 24992	Section Added.
Section 765	Solvent Cleaning—Batch Vapor Cleaning.	12/30/11	4/29/13, 78 FR 24992	Section Added.
Section 766	Solvent Cleaning—In-Line Vapor Cleaning.	12/30/11	4/29/13, 78 FR 24992	Section Added.
Section 767	Solvent Cleaning—Airless and Air-Tight Cleaning.	12/30/11	4/29/13, 78 FR 24992	Section Added.
Section 768	Solvent Cleaning—Alternative Compliance.	12/30/11	4/29/13, 78 FR 24992	Section Added.
Section 769	Solvent Cleaning—Recordkeeping and Monitoring.	12/30/11	4/29/13, 78 FR 24992	Section Added.
Section 770	Miscellaneous Industrial Solvent Cleaning Operations.	12/30/11	4/29/13, 78 FR 24992	Section Added.
Section 771	Miscellaneous Cleaning and VOC Materials Handling Standards.	12/30/11	4/29/13, 78 FR 24992	Section Added.
Section 773	Architectural and Industrial Maintenance Coating—General Requirements.	12/30/11	4/29/13, 78 FR 24992	Section Added.
Section 774	Architectural and Industrial Maintenance Coating—Standards.	12/30/11	4/29/13, 78 FR 24992	Section Added.
Section 775	Architectural and Industrial Maintenance Coating—Exemptions.	12/30/11	4/29/13, 78 FR 24992	Section Added.
Section 776	Architectural and Industrial Maintenance Coating—Labeling Requirements.	12/30/11	4/29/13, 78 FR 24992	Section Added.
Section 777	Architectural and Industrial Maintenance Coating—Reporting Requirements.	12/30/11	4/29/13, 78 FR 24992	Section Added.
Section 778	Architectural and Industrial Maintenance Coating—Testing Requirements.	12/30/11	4/29/13, 78 FR 24992	Section Added.
Section 799	Definitions	12/30/11	4/29/13, 78 FR 24992	Revised to update the definitions, terms, and the section title.
Chapter 8 Asbestos, Sulfur and Nitrogen Oxides				
Section 801	Sulfur Content of Fuel Oils	08/16/15	05/01/17, 82 FR 20270	Updates to the sulfur content of No. 2 and No.4 fuel oils and the prohibition of the use of No. 5 fuel oil.
Section 802	Sulfur Content of Coal	3/15/85	8/28/95, 60 FR 44431.	
Section 803	Sulfur Process Emissions	3/15/85	8/28/95, 60 FR 44431.	
Section 804	Nitrogen Oxide Emissions	3/15/85	8/28/95, 60 FR 44431.	
Section 805	Reasonably Available Control Technology for Major Stationary Sources of Oxides of Nitrogen.	4/16/04	12/28/04, 69 FR 77645, 69 FR 77647.	Revised paragraphs 805.1(a), 805.1(a)(3) and (4), 805.1(b) and (c), 805.5(b) and (c), 805.6, and 805.7.
Section 899	Definitions and Abbreviations	08/16/15	05/01/17, 82 FR 20270	Addition of new definitions that relate to the handling and storage of fuel oil.

EPA-APPROVED REGULATIONS AND STATUTES IN THE DISTRICT OF COLUMBIA SIP—Continued

State citation	Title/subject	State effective date	EPA approval date	Additional explanation
Chapter 9 Motor Vehicle Pollutants, Lead, Odors, and Nuisance Pollutants				
Section 904	Oxygenated Fuels	7/25/97	5/9/01, 66 FR 23614	Addition of subsection 904.3 to make the oxygenated gasoline program a CO contingency measure.
Section 915	National Low Emissions Vehicle Program.	2/11/00	7/20/00, 65 FR 44981.	
Section 999	Definitions and Abbreviations	2/11/00	7/20/00, 65 FR 44981.	
Chapter 10 Air Quality—Non-EGU Limits on Nitrogen Oxides Emissions				
Section 1000	Applicability	03/08/15	02/22/16, 81 FR 8656.	
Section 1001	NO_X Emissions Budget and NO_X Limit Per Source.	03/08/15	02/22/16, 81 FR 8656.	
Section 1002	Emissions Monitoring	03/08/15	02/22/16, 81 FR 8656.	
Section 1003	Record-Keeping and Reporting	03/08/15	02/22/16, 81 FR 8656.	
Section 1004	Excess Emissions	03/08/15	02/22/16, 81 FR 8656.	
Chapter 15 General and Transportation Conformity				
Section 1500	General Conformity—Purpose	1/8/10	5/28/10, 75 FR 29894	New Regulation.
Section 1501	General Conformity—Requirements.	1/8/10	5/28/10, 75 FR 29894	New Regulation.
Section 1502	Transportation Conformity—Purpose.	1/8/10	5/28/10, 75 FR 29894	New Regulation.
Section 1503	Transportation Conformity—Consultation Process.	1/8/10	5/28/10, 75 FR 29894	New Regulation.
Section 1504	Transportation Conformity—Interagency Consultation Requirements.	1/8/10	5/28/10, 75 FR 29894	New Regulation.
Section 1505	Transportation Conformity—Conflict Resolution Associated With Conformity Determinations.	1/8/10	5/28/10, 75 FR 29894	New Regulation.
Section 1506	Transportation Conformity—Public Consultation Procedures.	1/8/10	5/28/10, 75 FR 29894	New Regulation.
Section 1507	Transportation Conformity—Interagency Consultation Procedures.	1/8/10	5/28/10, 75 FR 29894	New Regulation.
Section 1508	Transportation Conformity—Procedures for Determining Regional Transportation-Related Emissions.	1/8/10	5/28/10, 75 FR 29894	New Regulation.
Section 1509	Transportation Conformity—Enforceability of Design Concept and Scope and Project-Level Mitigation and Control Measures.	1/8/10	5/28/10, 75 FR 29894	New Regulation.
Section 1599	Definitions	1/8/10	5/28/10, 75 FR 29894	New Regulation.
Appendices				
Appendix 1	Emission Limits for Nitrogen Oxide.	3/15/85	8/28/95, 60 FR 44431.	
Appendix 2	Table of Allowable Particulate Emissions from Process Sources.	3/15/85	8/28/95, 60 FR 44431.	
Appendix 3	Graphic Arts Sources	3/15/85	8/28/95, 60 FR 44431.	
Appendix 5	Test Methods for Sources of Volatile Organic Compounds.	09/30/93	10/27/99, 64 FR 57777.	
District of Columbia Municipal Regulations (DCMR), Title 18—Vehicles and Traffic				
Chapter 4 Motor Vehicle Title and Registration				
Section 411	Registration of Motor Vehicles: General Provisions.	10/10/86	6/11/99, 64 FR 31498.	
Section 412	Refusal of Registration	10/17/97	6/11/99, 64 FR 31498.	
Section 413	Application for Registration	9/16/83	6/11/99, 64 FR 31498.	

EPA-APPROVED REGULATIONS AND STATUTES IN THE DISTRICT OF COLUMBIA SIP—Continued

State citation	Title/subject	State effective date	EPA approval date	Additional explanation
Section 429	Enforcement of Registration and Reciprocity Requirements.	3/4/83	6/11/99, 64 FR 31498.	
Chapter 6 Inspection of Motor Vehicles				
Section 600	General Provisions	4/23/82	6/11/99, 64 FR 31498.	
Section 602	Inspection Stickers	3/15/85	6/11/99, 64 FR 31498.	
Section 603	Vehicle Inspection: Approved Vehicles.	6/29/74; Recodified 4/1/81.	6/11/99, 64 FR 31498.	
Section 604	Vehicle Inspection: Rejected Vehicles.	11/23/84	4/10/86, 51 FR 12322.	
Section 606	Vehicle Inspection: Condemned Vehicles.	6/29/74; Recodified 4/1/81.	6/11/99, 64 FR 31498.	
Section 607	Placement of Inspection Stickers on Vehicles.	4/7/77; Recodified 4/1/81.	6/11/99, 64 FR 31498.	
Section 608	Lost, Mutilated or Detached Inspection Stickers.	6/30/72; Recodified 4/1/81.	6/11/99, 64 FR 31498.	
Section 609	Inspection of Non-Registered Motor Vehicles.	6/30/72; Recodified 4/1/81.	6/11/99, 64 FR 31498.	
Section 617	Inspector Certification	7/22/94	6/11/99, 64 FR 31498.	
Section 618	Automotive Emissions Repair Technician.	7/22/94	6/11/99, 64 FR 31498.	
Section 619	Vehicle Emission Recall Compliance.	10/17/97	6/11/99, 64 FR 31498.	
Chapter 7 Motor Vehicle Equipment				
Section 701	Historic Motor Vehicles	2/25/78; Recodified 4/1/81.	6/11/99, 64 FR 31498.	
Section 750	Exhaust Emission Systems	4/26/77; Recodified 4/1/81.	6/11/99, 64 FR 31498.	
Section 751	Compliance with Exhaust Emission Standards.	7/22/94	6/11/99, 64 FR 31498.	
Section 752	Maximum Allowable Levels of Exhaust Components.	10/17/97	6/11/99, 64 FR 31498.	
Section 753	Inspection of Exhaust Emission Systems.	5/23/83	4/10/86, 51 FR 12322.	
Section 754	Federal Transient Emissions Test: Testing Procedures.	7/22/94	6/11/99, 64 FR 31498.	
Section 755	Federal Transient Emissions Test: Equipment.	7/22/94	6/11/99, 64 FR 31498.	
Section 756	Federal Transient Emissions Test: Quality Assurance Procedures.	7/22/94	6/11/99, 64 FR 31498.	
Chapter 11 Motor Vehicle Offenses and Penalties				
Section 1101	Offenses Related to Title, Registration, and Identification Tags.	6/30/72; Recodified 4/1/81.	6/11/99, 64 FR 31498.	
Section 1103	Offenses Related to Inspection Stickers.	6/30/72; Recodified 4/1/81.	6/11/99, 64 FR 31498.	
Section 1104	False Statements, Alterations, Forgery, and Dishonored Checks.	11/29/91	6/11/99, 64 FR 31498.	
Section 1110	Penalties for Violations	11/29/91	6/11/99, 64 FR 31498.	
Chapter 26 Civil Fines for Moving and Non-Moving Violations				
Section 2600.1	Infraction: Inspection, Registration Certificate, Tags.	8/31/90	6/11/99, 64 FR 31498.	
Chapter 99 Definitions				
Section 9901	Definitions	10/17/97	6/11/99, 64 FR 31498	Definition of "Emission Recall Notice".
D.C. Official Code				
Title I—Chapter 11A Government Ethics and Accountability				
Section 1–1161.01	Definitions	4/27/12	10/22/13, 78 FR 62455.	
Section 1–1162.23	Conflicts of Interest	4/27/12	10/22/13, 78 FR 62455.	

EPA-APPROVED REGULATIONS AND STATUTES IN THE DISTRICT OF COLUMBIA SIP—Continued

State citation	Title/subject	State effective date	EPA approval date	Additional explanation
Section 1–1162.24	Public Reporting	4/27/12	10/22/13, 78 FR 62455.	
Section 1–1162.25	Confidential Disclosure of Financial Interest.	4/27/12	10/22/13, 78 FR 62455	

(d) *EPA-approved State source-specific requirements.*

EPA-APPROVED DISTRICT OF COLUMBIA SOURCE-SPECIFIC REQUIREMENTS

Name of source	Permit number	State effective date	EPA approval date	Additional explanation
General Services Administration Central Heating and Refrigeration Plant and West Heating Plant.	N/A—it is the operating permit issued to GSA by the District of Columbia on October 17, 1997.	10/17/97	9/30/99 64 FR 52654	The following portions of GSA's operating permit are not included in the SIP: The portion of Condition 3 referring to Table 1; Table 1; Condition 4; Table 3; and Condition 17.

(e) *EPA-approved non-regulatory and quasi-regulatory material.*

Name of non-regulatory SIP revision	Applicable geographic area	State submittal date	EPA approval date	Additional explanation
1990 Base Year Emissions Inventory.	Washington, DC carbon monoxide maintenance area.	1/13/94 10/12/95	1/30/96 61 FR 2931	52.474(a) CO.
1990 Base Year Emissions Inventory.	Metropolitan Washington ozone nonattainment area.	1/13/94	4/23/97 62 FR 19676	52.474(b) VOC, NO_X, CO.
1990 Base Year Emissions Inventory.	Metropolitan Washington ozone nonattainment area.	11/3/97	7/8/98 63 FR 36854	52.474(c) VOC, NO_X.
15% Rate of Progress Plan.	Metropolitan Washington Ozone Nonattainment Area.	4/16/98	08/05/99, 64 FR 42600	52.476(a).
Negative Declarations—VOC Source Categories.	Metropolitan Washington ozone nonattainment area.	4/8/93, 9/4/97	10/27/99, 64 FR 57777	52.478(a), 52.478(b).
Negative Declarations—VOC Source Categories.	Metropolitan Washington ozone nonattainment area.	1/26/10, 3/24/11	4/29/13, 78 FR 24992	52.478(c).
Photochemical Assessment Monitoring Stations (PAMS) Program.	Metropolitan Washington ozone nonattainment area.	1/14/94	9/11/95 60 FR 47081	52.480.
Small Business stationary source technical and environmental compliance assistance program.	Statewide	10/22/93	8/17/94 59 FR 42165	52.510.
Establishment of air quality monitoring Network.	Statewide	5/16/79	8/31/81 46 FR 43676	Subpart I, section 52.465(c)(18).
Lead (Pb) SIP	Washington, DC	10/7/82	8/18/83 48 FR 37401	52.515(c)(22).
Plan for public notification of air quality.	Metropolitan Washington ozone nonattainment area.	12/5/83	6/1/84 49 FR 22810	52.515(c)(23).
Carbon Monoxide Maintenance Plan.	Washington, DC	10/12/95 3/9/04	1/30/96, 61 FR 2931 70 FR 16958, 4/4/05	52.515(c)(36) Revised Carbon Monoxide Maintenance Plan Base Year Emissions Inventory using MOBILE6.
1996–1999 Rate-of-Progress plan SIP.	Washington 1-hour ozone nonattainment area.	11/3/97, 5/25/99	5/13/05, 70 FR 25688	1999 motor vehicle emissions budgets of 128.5 tons per day (tpy) of VOC and 196.4 tpy of NOx, effective 6/13/05.

Name of non-regulatory SIP revision	Applicable geographic area	State submittal date	EPA approval date	Additional explanation
1990 Base Year inventory Revisions.	Washington 1-hour ozone nonattainment area.	9/5/03, 2/25/04	5/13/05, 70 FR 25688	Effective date: 6/13/05.
1999-2005 Rate-of-Progress Plan SIP Revision and the Transportation Control Measures (TCMs) in Appendix J.	Washington 1-hour ozone nonattainment area.	9/5/03, 2/25/04	5/13/05, 70 FR 25688	Only the TCMs in Appendix J of the 2/25/2004 revision, 2002 motor vehicle emissions budgets (MVEBs) of 125.2 tons per day (tpy) for VOC and 290.3 tpy of NOx, and, 2005 MVEBs of 97.4 tpy for VOC and 234.7 tpy of NOx, effective 6/13/05.
VMT Offset SIP Revision	Washington 1-hour ozone nonattainment area.	9/5/03, 2/25/04	5/13/05, 70 FR 25688	Effective date: 6/13/05.
Contingency Measure Plan.	Washington 1-hour ozone nonattainment area.	9/5/03, 2/25/04	5/13/05, 70 FR 25688	Effective date: 6/13/05.
1-hour Ozone Modeled Demonstration of Attainment and Attainment Plan.	Washington 1-hour ozone nonattainment area.	9/5/03, 2/25/04	5/13/05, 70 FR 25688	2005 motor vehicle emissions budgets of 97.4 tons per day (tpy) for VOC and 234.7 tpy of NOx, effective 6/13/05.
RACT under the 8-Hour ozone NAAQS.	District of Columbia	9/22/08	6/16/09, 74 FR 28447	
Section 110(a)(2) Infrastructure Requirements for the 1997 8-Hour Ozone NAAQS.	District of Columbia	12/06/07 1/11/08	4/12/11, 76 FR 20237	This action addresses the following CAA elements: 110(a)(2)(A), (B), (C), (D)(ii), (E), (F), (G), (H), (J), (K), (L), and (M).
Section 110(a)(2) Infrastructure Requirements for the 1997 $PM_{2.5}$ NAAQS.	District of Columbia	8/25/08 9/22/08	4/12/11, 76 FR 20237	This action addresses the following CAA elements: 110(a)(2)(A), (B), (C), (D)(ii), (E), (F), (G), (H), (J), (K), (L), and (M).
Section 110(a)(2) Infrastructure Requirements for the 2006 $PM_{2.5}$ NAAQS.	District of Columbia	9/21/09	4/12/11, 76 FR 20237	This action addresses the following CAA elements: 110(a)(2)(A), (B), (C), (D)(ii), (E), (F), (G), (H), (J), (K), (L), and (M).
Reasonable Further Progress Plan (RFP), Reasonably Available Control Measures, and Contingency Measures.	Washington DC–MD–VA 1997 8-hour ozone moderate nonattainment area.	6/12/07	9/20/11, 76 FR 58116	
2002 Base Year Inventory for VOC, NO_X, and CO.	Washington DC–MD–VA 1997 8-hour ozone moderate nonattainment area.	6/12/07	9/20/11, 76 FR 58116	
2008 RFP Transportation Conformity Budgets.	Washington DC–MD–VA 1997 8-hour ozone moderate nonattainment area.	6/12/07	9/20/11, 76 FR 58116	
Regional Haze Plan	District of Columbia	10/27/11	2/2/12, 77 FR 5191	
2002 Base Year Emissions Inventory for the 1997 fine particulate matter ($PM_{2.5}$) standard.	District of Columbia portion of the Washington DC–MD–VA 1997 $PM_{2.5}$ nonattainment area.	4/2/08	10/30/12, 77 FR 65630	§ 52.474(e)
Section 110(a)(2) Infrastructure Requirements for the 2008 Lead NAAQS.	District of Columbia	7/18/13	10/22/13, 78 FR 62455	This action addresses the following CAA elements: 110(a)(2)(A), (B), (C), (D), (E), (F), (G), (H), (J), (K), (L), and (M), or portions thereof.
CAA section 128 requirements in relation to State Boards.	District of Columbia	7/18/13	10/22/13, 78 FR 62455	

Name of non-regulatory SIP revision	Applicable geographic area	State submittal date	EPA approval date	Additional explanation
Maintenance plan for the District of Columbia Portion of the Washington, DC–MD–VA Nonattainment Area for the 1997 annual fine particulate matter ($PM_{2.5}$) National Ambient Air Quality Standard.	District of Columbia	06/03/13 07/22/13	10/6/14, 79 FR 60081	See § 52.477(b).
Attainment Demonstration Contingency Measure Plan.	Washington, DC-MD-VA 1997 8-Hour Ozone Nonattainment Area.	June 12, 2007	4/10/15, 80 FR 19206	2010 motor vehicle emissions budgets of 144.3 tons per day (tpd) NO_X.
8-hour Ozone Modeled Demonstration of Attainment and Attainment Plan for the 1997 ozone national ambient air quality standards.	Washington, DC-MD-VA 1997 8-Hour Ozone Nonattainment Area.	June 12, 2007	4/10/15, 80 FR 19206	2009 motor vehicle emissions budgets of 66.5 tons per day (tpd) for VOC and 146.1 tpd of NO_X.
Section 110(a)(2) Infrastructure Requirements for the 2010 NO_2 NAAQS.	District of Columbia	6/9/14	4/13/15, 80 FR 19538	This action addresses the following CAA elements: 110(a)(2)(A), (B), (C), (D)(i)(II), (D)(ii), (E), (F), (G), (H), (J), (K), (L), and (M). PSD related portions are addressed by FIP in 40 CFR 52.499.
Section 110(a)(2) Infrastructure Requirements for the 2008 Ozone NAAQS.	District of Columbia	6/13/14	4/13/15, 80 FR 19538	This action addresses the following CAA elements: 110(a)(2)(A), (B), (C), (D)(i)(II), (D)(ii), (E), (F), (G), (H), (J), (K), (L), and (M). PSD related portions are addressed by FIP in 40 CFR 52.499.
Section 110(a)(2) Infrastructure Requirements for the 2010 SO_2 NAAQS.	District of Columbia	6/13/14	4/13/15, 80 FR 19538	This action addresses the following CAA elements: 110(a)(2)(A), (B), (C), (D)(i)(II), (D)(ii), (E), (F), (G), (H), (J), (K), (L), and (M). PSD related portions are addressed by FIP in 40 CFR 52.499.
Section 110(a)(2) Infrastructure Requirements for the 2010 SO_2 NAAQS.	District-wide	7/18/14	4/3/18, 83 FR 14175	This action addresses CAA section. 110(a)(2)(D)(i)(I) for the 2010 SO_2 NAAQS.
Emergency Air Pollution Plan.	District of Columbia	6/13/14	4/13/15, 80 FR 19538	This action addresses the requirements of 40 CFR 51, subpart H for particulate matter, sulfur oxides (SOX), carbon monoxide (CO), and ozone, as well as section 110(a)(2)(G) of the CAA for the 2008 ozone, 2010 SO_2, and 2010 NO2 NAAQS.
2011 Base Year Emissions Inventory for the 2008 8-hour ozone standard.	District of Columbia portion of the Washington, DC-MD-VA 2008 ozone nonattainment area.	7/17/14	5/13/15, 80 FR 27255	§ 52.474(f).
Section 110(a)(2) Infrastructure Requirements for the 2006 $PM_{2.5}$ NAAQS.	District of Columbia	07/16/15	8/21/2015, 80 FR 50789	This action addresses the following CAA elements, or portions thereof: 110(a)(2)(D)(i)(I).

Name of non-regulatory SIP revision	Applicable geographic area	State submittal date	EPA approval date	Additional explanation
Interstate Pollution Transport Requirements for the 2010 NO_2 NAAQS.	District of Columbia	6/6/14	2/19/16, 81 FR 8406	This action addresses the infrastructure element of CAA section 110(a)(2)(D)(i)(I), or the good neighbor provision, for the 2010 NO2 NAAQS.
Section 110(a)(2) Infrastructure Requirements for the 2012 $PM_{2.5}$ NAAQS.	District of Columbia	12/28/15	8/16/16, 81 FR 54504	This action addresses the following CAA elements: 110(a)(2)(A), (B), (C), (D)(i)(I), D(i)(II), (E), (F), (G), (H), (J), (K), (L), and (M). PSD related portions are addressed by FIP in 40 CFR 52.499.
Regional Haze Five-Year Progress Report.	District of Columbia	3/2/2016	8/10/2017, 82 FR 37305	Addresses requirements of 40 CFR 51.308(g) and (h) for Regional Haze Five-Year Progress Report.

[63 FR 67417, Dec. 7, 1998]

EDITORIAL NOTE: For FEDERAL REGISTER citations affecting § 52.470, see the List of CFR Sections Affected, which appears in the Finding Aids section of the printed volume and at *www.fdsys.gov*.

§ 52.471 Classification of regions.

The District of Columbia plan was evaluated on the basis of the following classifications:

Air quality control region	Pollutant				
	Particulate matter	Sulfur oxides	Nitrogen dioxide	Carbon monoxide	Ozone
National Capital Interstate	I	I	III	I	I

[37 FR 10857, May 31, 1972, as amended at 39 FR 16346, May 8, 1974; 46 FR 61263, Dec. 16, 1981]

§ 52.472 Approval status.

(a) With the exceptions set forth in this subpart, the Administrator approves the District of Columbia's plan for the attainment and maintenance of the national standards.

(b) [Reserved]

(c) With the exceptions set forth in this subpart, the Administrator approves the District of Columbia's plan for the attainment and maintenance of the national standards under section 110 of the Clean Air Act. Furthermore, the Administrator finds that the plan satisfies all requirements of Part D, Title 1, of the Clean Air Act as amended in 1977.

(d) Section 710 of title 20 of the District of Columbia Regulations is approved with the following condition: Any alternative controls or exemptions under section 710.8 approved or granted by the District of Columbia are subject to a public notice and public hearing requirements and must be submitted to EPA as SIP revisions. Such alternatives or exemptions are not effective until approved as SIP revisions by EPA.

(e) [Reserved]

(f) [Reserved]

[38 FR 33709, Dec. 6, 1973, as amended at 46 FR 61263, Dec. 16, 1981; 57 FR 34251, Aug. 4, 1992; 60 FR 5136, Jan. 26, 1995; 60 FR 15486, Mar. 24, 1995; 61 FR 2936, Jan. 30, 1996; 78 FR 33984, June 6, 2013]

§ 52.473 [Reserved]

§ 52.474 Base Year Emissions Inventory.

(a) EPA approves as a revision to the District of Columbia Implementation Plan the 1990 base year emission inventory for the Washington Metropolitan Statistical Area, submitted by Director, District of Columbia Consumer and Regulatory Affairs, on January 13, 1994 and October 12, 1995. This submittal consist of the 1990 base year stationary, area and off-road mobile and on-road mobile emission inventories in the Washington Statistical Area for the pollutant, carbon monoxide (CO).

(b) EPA approves as a revision to the District of Columbia State Implementation Plan the 1990 base year emission inventory for the District's portion of the Metropolitan Washington DC ozone nonattainment area submitted by the Director, DCRA, on January 13, 1994. This submittal consists of the 1990 base year point, area, highway mobile, nonroad and biogenic source emission inventories in the area for the following pollutants: Volatile organic compounds (VOC), carbon monoxide (CO), and oxides of nitrogen (NO_X).

(c) EPA approves as a revision to the District of Columbia State Implementation Plan an amendment to the 1990 base year emission inventories for the District's portion of the Metropolitan Washington, D.C. ozone nonattainment area submitted by the Director, Department of Consumer and Regulatory Affairs, on November 3, 1997. This submittal consists of amendments to the 1990 base year point, area, highway mobile, and non-road source emission inventories in the area for the following pollutants: volatile organic compounds (VOC), and oxides of nitrogen (NO_X).

(d) EPA approves as a revision to the District of Columbia State Implementation Plan the 2002 base year emissions inventories for the Washington DC–MD–VA 1997 8-hour ozone moderate nonattainment area submitted by the Acting Director of the District of Columbia Department of the Environment on June 12, 2007. This submittal consists of the 2002 base year point, area, non-road mobile, and on-road mobile source inventories in area for the following pollutants: volatile organic compounds (VOC), carbon monoxide (CO) and nitrogen oxides (NO_X).

(e) EPA approves as a revision to the District of Columbia State Implementation Plan the 2002 base year emissions inventory for the District of Columbia portion of the Washington DC–MD–VA 1997 fine particulate matter ($PM_{2.5}$) nonattainment area submitted by the District Department of the Environment on April 2, 2008. The 2002 base year emissions inventory includes emissions estimates that cover the general source categories of point sources, non-road mobile sources, area sources, on-road mobile sources, and biogenic sources. The pollutants that comprise the inventory are nitrogen oxides (NO_X), volatile organic compounds (VOCs), $PM_{2.5}$, coarse particles (PM_{10}), ammonia (NH_3), and sulfur dioxide (SO_2).

(f) EPA approves as a revision to the District of Columbia State Implementation Plan the 2011 base year emissions inventory for the District of Columbia portion of the Washington, DC-MD-VA 2008 8-hour ozone nonattainment area submitted by the District Department of the Environment on July 17, 2014. The 2011 base year emissions inventory includes emissions estimates that cover the general source categories of point sources, non-road mobile sources, area sources, on-road mobile sources, and biogenic sources. The pollutants that comprise the inventory are carbon monoxide (CO), nitrogen oxides (NO_X) and volatile organic compounds (VOC).

[61 FR 2936, Jan. 30, 1996, as amended at 62 FR 19679, Apr. 23, 1997; 63 FR 36858, July 8, 1998; 76 FR 58118, Sept. 20, 2011; 77 FR 65631, Oct. 30, 2012; 80 FR 27258, May 13, 2015; 80 FR 43628, July 23, 2015]

§ 52.475 Determinations of attainment.

(a) Based upon EPA's review of the air quality data for the 3-year period 2007 to 2009, EPA determined that the Metropolitan Washington, District of Columbia-Maryland-Virginia (DC-MD-VA) fine particle ($PM_{2.5}$) nonattainment area attained the 1997 annual $PM_{2.5}$ National Ambient Air Quality Standard (NAAQS) by the applicable attainment date of April 5, 2010. Therefore, EPA has met the requirement

pursuant to CAA section 179(c) to determine, based on the area's air quality as of the attainment date, whether the area attained the standard. EPA also determined that the Metropolitan Washington, DC-MD-VA nonattainment area is not subject to the consequences of failing to attain pursuant to section 179(d).

(b) Based upon EPA's review of the air quality data for the 3-year period 2007 to 2009, Washington, DC-MD-VA moderate nonattainment area has attained the 1997 8-hour ozone NAAQS by the applicable attainment date of June 15, 2010. Therefore, EPA has met the requirement pursuant to CAA section 181(b)(2)(A) to determine, based on the area's air quality as of the attainment date, whether the area attained the standard. EPA also determined that the Washington, DC-MD-VA moderate nonattainment area will not be reclassified for failure to attain by its applicable attainment date pursuant to section 181(b)(2)(A).

(c) Based upon EPA's review of the air quality data for the 3-year period 2013 to 2015, the Washington, DC-MD-VA marginal ozone nonattainment area has attained the 2008 8-hour ozone national ambient air quality standard (NAAQS) by the applicable attainment date of July 20, 2016. Therefore, EPA has met the requirement pursuant to Clean Air Act section 181(b)(2)(A) to determine, based on the area's air quality as of the attainment date, whether the area attained the standard. EPA also determined that the Washington, DC-MD-VA marginal nonattainment area will not be reclassified for failure to attain by its applicable attainment date pursuant to section 181(b)(2)(A).

[77 FR 1413, Jan. 10, 2012, as amended at 77 FR 11741, Feb. 28, 2012; 82 FR 52655, Nov. 14, 2017]

§ 52.476 Control strategy: ozone.

(a) EPA approves as a revision to the District of Columbia State Implementation Plan the 15 Percent Rate of Progress Plan for the District of Columbia's portion of the Metropolitan Washington, D.C. ozone nonattainment area, submitted by the Director of the District of Columbia Department of Health on April 16, 1998.

(b)–(c) [Reserved]

(d) Based upon EPA's review of the air quality data for the 3-year period 2003 to 2005, EPA has determined that the Washington severe 1-hour ozone nonattainment area attained the 1-hour ozone NAAQS by the applicable attainment date of November 15, 2005. EPA also has determined that the Washington severe 1-hour ozone nonattainment area is not subject to the imposition of the section 185 penalty fees.

(e) EPA approves revisions to the District of Columbia State Implementation Plan consisting of the 2008 reasonable further progress (RFP) plan, reasonably available control measures, and contingency measures for the Washington DC–MD–VA 1997 8-hour ozone moderate nonattainment area submitted by the Acting Director of the District of Columbia Department of the Environment on June 12, 2007.

(f) EPA approves the following 2008 RFP motor vehicle emissions budgets (MVEBs) for the Washington, DC–MD–VA 1997 8-hour ozone moderate nonattainment area submitted by the Director of the Virginia Department of Environment Quality on June 12, 2007:

TRANSPORTATION CONFORMITY EMISSIONS BUDGETS FOR THE WASHINGTON, DC-MD-VA AREA

Type of control strategy SIP	Year	VOC (TPD)	NO_X (TPD)	Effective date of adequacy determination or SIP approval
Rate of Progress Plan	2008	70.8	159.8	September 21, 2009 (74 FR 45853), published September 4, 2009.

(g) *Determination of attainment*. EPA has determined, as of February 28, 2012, that based on 2007 to 2009 and 2008 to 2010 ambient air quality data, the Washington, DC-MD-VA moderate nonattainment area has attained the 1997

8-hour ozone National Ambient Air Quality Standard (NAAQS). This determination, in accordance with 40 CFR 51.918, suspends the requirements for this area to submit an attainment demonstration, associated reasonably available control measures, a reasonable further progress plan, contingency measures, and other planning SIPs related to attainment of the standard for as long as this area continues to meet the 1997 8-hour ozone NAAQS.

(h) EPA approves revisions to the District of Columbia State Implementation Plan consisting of the attainment demonstration required under 40 CFR 51.908 demonstrating attainment of the 1997 ozone NAAQS by the applicable attainment date of June 15, 2010 and the failure to attain contingency measures for the Washington, DC-MD-VA 1997 8-hour ozone moderate nonattainment area submitted by the Acting Director of the District of Columbia Department of the Environment on June 12, 2007.

(i) EPA approves the following 2009 attainment demonstration and 2010 motor vehicle emissions budgets (MVEBs) for the Washington, DC-MD-VA 1997 8-hour ozone moderate nonattainment area submitted by the Acting Director of the District of Columbia Department of the Environment on June 12, 2007:

TRANSPORTATION CONFORMITY EMISSIONS BUDGETS FOR THE WASHINGTON, DC-MD-VA AREA

Type of control strategy SIP	Year	VOC (TPD)	NO_X (TPD)	Effective date of adequacy determination or SIP approval
Attainment Demonstration	2009	66.5	146.1	February 22, 2013 (78 FR 9044), published February 7, 2013.
Contingency Measures Plan	2010		144.3	February 22, 2013 (78 FR 9044), published February 7, 2013.

[64 FR 42602, Aug. 5, 1999, as amended at 66 FR 631, Jan. 3, 2001; 69 FR 43522, July 21, 2004; 73 FR 43361, July 25, 2008; 76 FR 58118, Sept. 20, 2011; 77 FR 11741, Feb. 28, 2012; 80 FR 19218, Apr. 10, 2015]

§ 52.477 Control strategy: Particular matter.

(a) *Determination of Attainment.* EPA has determined, as of January 12, 2009, that the District of Columbia portion of the Metropolitan Washington, DC–MD–VA nonattainment area for the 1997 $PM_{2.5}$ NAAQS has attained the 1997 $PM_{2.5}$ NAAQS. This determination, in accordance with 40 CFR 52.1004(c), suspends the requirements for this area to submit an attainment demonstration and associated reasonably available control measures, a reasonable further progress plan, contingency measures, and other planning SIPs related to attainment of the standard for as long as the area continues to attain the 1997 $PM_{2.5}$ NAAQS.

(b) *Maintenance Plan and Transportation Conformity Budgets.* EPA approves the maintenance plan for the District of Columbia portion of the Washington, DC–MD–VA nonattainment area for the 1997 annual $PM_{2.5}$ NAAQS submitted by the District of Columbia for the entire Area on June 3, 2013 and supplemented on July 22, 2013. The MVEBs are based on a tiered approach: Tier 1 MVEBs are effective as EPA has determined them adequate for transportation conformity purposes; Tier 2 mobile budgets will become effective upon the completion of the interagency consultation process and fully documented within the first conformity analysis that uses the Tier 2 MVEBs.

WASHINGTON, DC–MD–VA $PM_{2.5}$ AREA'S TIER 1 MOTOR VEHICLE EMISSIONS BUDGETS FOR THE 1997 ANNUAL $PM_{2.5}$ NAAQS, (TPY)

Type of control strategy SIP	Year	NO_X	$PM_{2.5}$	Effective date of SIP approval
Maintenance Plan	2017	41,709	1,787	11/5/14
	2025	27,400	1,350	

WASHINGTON, DC–MD–VA $PM_{2.5}$ AREA'S TIER 2 MOTOR VEHICLE EMISSIONS BUDGETS FOR THE 1997 ANNUAL $PM_{2.5}$ NAAQS, (TPY)

Type of control strategy SIP	Year	NO_X	$PM_{2.5}$	Effective date of SIP approval
Maintenance Plan	2017	50,051	2,144	Contingent and effective upon interagency consultation.
	2025	32,880	1,586	

[79 FR 60084, Oct. 6, 2014]

§ 52.478 Rules and Regulations.

(a) On April 8, 1993, the District of Columbia submitted a letter to EPA declaring that there are no sources located in the District belonging to the following VOC categories:

(1) Automobile and light-duty truck manufacturing;

(2) Coating of cans, coils, paper, fabric and vinyl, metal furniture, large appliances, magnet wire, miscellaneous metal parts and products, and flatwood paneling;

(3) Storage of petroleum liquids in fixed-roof tanks and external floating-roof tanks;

(4) Bulk gasoline plants and terminals;

(5) Petroleum refinery sources;

(6) Petroleum refinery equipment leaks;

(7) Manufacture of synthesized pharmaceutical products, pneumatic rubber tires, vegetable oil, synthetic organic chemicals (fugitive VOCs and air oxidation), and high density polyethylene, polypropylene and polystyrene resins;

(8) Graphic arts systems;

(9) Storage, transportation and marketing of VOCs (fugitive VOCs from oil and gas production and natural gas and gasoline processing).

(b) On September 4, 1997, the District of Columbia submitted a letter to EPA declaring that there are no sources located in the District which belong to the following VOC categories:

(1) Coating of plastic parts (business machines and other);

(2) Aerospace;

(3) Shipbuilding and repair;

(4) Automobile refinishing;

(5) Industrial wastewater;

(6) Distillation or reactor or batch processes in the synthetic organic chemical manufacturing industry;

(7) Volatile organic storage;

(8) Wood furniture coatings;

(9) Offset lithography;

(10) Clean-up solvents.

(c) On March 24, 2011, the District of Columbia submitted a letter to EPA declaring that there are no sources located in the District which belong to the following VOC categories:

(1) Auto and Light-duty Truck Assembly Coatings;

(2) Fiberglass Boat Manufacturing Materials;

(3) Paper, Film and Foil Coatings;

(4) Flatwood Paneling.

[64 FR 57781, Oct. 27, 1999, as amended at 78 FR 24997, Apr. 29, 2013]

§ 52.479 [Reserved]

§ 52.480 Photochemical Assessment Monitoring Stations (PAMS) Program.

On January 14, 1994 the District of Columbia's Department of Consumer and Regulatory Affairs submitted a plan for the establishment and implementation of a Photochemical Assessment Monitoring Stations (PAMS) Program as a state implementation plan (SIP) revision, as required by section 182(c)(1) of the Clean Air Act. EPA approved the Photochemical Assessment Monitoring Stations (PAMS) Program on September 11, 1995 and made it part of the District of Columbia SIP. As with all components of the SIP, the District of Columbia must implement the program as submitted and approved by EPA.

[60 FR 47084, Sept. 11, 1995]

§§ 52.481–52.483 [Reserved]

§ 52.484 Interstate pollutant transport provisions; What are the FIP requirements for decreases in emissions of nitrogen oxides?

(a)(1) The owner and operator of each source located within the District of Columbia and for which requirements are set forth under the Federal CAIR

NO_X Annual Trading Program in subparts AA through II of part 97 of this chapter must comply with such applicable requirements. The obligation to comply with these requirements in part 97 of this chapter will be eliminated by the promulgation of an approval by the Administrator of a revision to the District of Columbia State Implementation Plan (SIP) as meeting the requirements of CAIR for $PM_{2.5}$ relating to NO_X under § 51.123 of this chapter, except to the extent the Administrator's approval is partial or conditional or unless such approval is under § 51.123(p) of this chapter.

(2) Notwithstanding any provisions of paragraph (a)(1) of this section, if, at the time of such approval of the District of Columbia's SIP, the Administrator has already allocated CAIR NO_X allowances to sources in the District of Columbia for any years, the provisions of part 97 of this chapter authorizing the Administrator to complete the allocation of CAIR NO_X allowances for those years shall continue to apply, unless the Administrator approves a SIP provision that provides for the allocation of the remaining CAIR NO_X allowances for those years.

(b)(1) The owner and operator of each NO_X source located within the District of Columbia and for which requirements are set forth under the Federal CAIR NO_X Ozone Season Trading Program in subparts AAAA through IIII of part 97 of this chapter must comply with such applicable requirements. The obligation to comply with these requirements in part 97 of this chapter will be eliminated by the promulgation of an approval by the Administrator of a revision to the District of Columbia State Implementation Plan (SIP) as meeting the requirements of CAIR for ozone relating to NO_X under § 51.123 of this chapter, except to the extent the Administrator's approval is partial or conditional or unless such approval is under § 51.123(ee) of this chapter.

(2) Notwithstanding any provisions of paragraph (b)(1) of this section, if, at the time of such approval of the District of Columbia's SIP, the Administrator has already allocated CAIR NO_X Ozone Season allowances to sources in the District of Columbia for any years, the provisions of part 97 of this chapter authorizing the Administrator to complete the allocation of CAIR NO_X Ozone Season allowances for those years shall continue to apply, unless the Administrator approves a SIP provision that provides for the allocation of the remaining CAIR NO_X Ozone Season allowances for those years.

(c) Notwithstanding any provisions of paragraphs (a) and (b) of this section and subparts AA through II and AAAA through IIII of part 97 of this chapter to the contrary:

(1) With regard to any control period that begins after December 31, 2014,

(i) The provisions in paragraphs (a) and (b) of this section relating to NO_X annual or ozone season emissions shall not be applicable; and

(ii) The Administrator will not carry out any of the functions set forth for the Administrator in subparts AA through II and AAAA through IIII of part 97 of this chapter; and

(2) The Administrator will not deduct for excess emissions any CAIR NO_X allowances or CAIR NO_X Ozone Season allowances allocated for 2015 or any year thereafter;

(3) By March 3, 2015, the Administrator will remove from the CAIR NO_X Allowance Tracking System accounts all CAIR NO_X allowances allocated for a control period in 2015 and any subsequent year, and, thereafter, no holding or surrender of CAIR NO_X allowances will be required with regard to emissions or excess emissions for such control periods; and

(4) By March 3, 2015, the Administrator will remove from the CAIR NO_X Ozone Season Allowance Tracking System accounts all CAIR NO_X Ozone Season allowances allocated for a control period in 2015 and any subsequent year, and, thereafter, no holding or surrender of CAIR NO_X Ozone Season allowances will be required with regard to emissions or excess emissions for such control periods.

[72 FR 62345, Nov. 2, 2007, as amended at 76 FR 48362, Aug. 8, 2011; 79 FR 71671, Dec. 3, 2014]

§ 52.485 Interstate pollutant transport provisions; What are the FIP requirements for decreases in emissions of sulfur dioxide?

(a) The owner and operator of each SO_2 source located within the District of Columbia and for which requirements are set forth under the Federal CAIR SO_2 Trading Program in subparts AAA through III of part 97 of this chapter must comply with such applicable requirements. The obligation to comply with these requirements in part 97 of this chapter will be eliminated by the promulgation of an approval by the Administrator of a revision to the District of Columbia State Implementation Plan as meeting the requirements of CAIR for $PM_{2.5}$ relating to SO_2 under § 51.124 of this chapter, except to the extent the Administrator's approval is partial or conditional or unless such approval is under § 51.124(r) of this chapter.

(b) Notwithstanding any provisions of paragraph (a) of this section and subparts AAA through III of part 97 of this chapter and any State's SIP to the contrary:

(1) With regard to any control period that begins after December 31, 2014,

(i) The provisions of paragraph (a) of this section relating to SO_2 emissions shall not be applicable; and

(ii) The Administrator will not carry out any of the functions set forth for the Administrator in subparts AAA through III of part 97 of this chapter; and

(2) The Administrator will not deduct for excess emissions any CAIR SO_2 allowances allocated for 2015 or any year thereafter.

[72 FR 62345, Nov. 2, 2007, as amended at 76 FR 48362, Aug. 8, 2011; 79 FR 71671, Dec. 3, 2014]

§§ 52.486–52.498 [Reserved]

§ 52.499 Significant deterioration of air quality.

(a) The requirements of sections 160 through 165 of the Clean Air Act are not met, since the plan does not include approvable procedures for preventing the significant deterioration of air quality.

(b) Regulations for preventing significant deterioration of air quality. The provisions of § 52.21 except paragraph (a)(1) are hereby incorporated and made a part of the applicable State plan for the District of Columbia.

[43 FR 26410, June 19, 1978, as amended at 45 FR 52741, Aug. 7, 1980; 68 FR 11322, Mar. 10, 2003; 68 FR 74488, Dec. 24, 2003]

§ 52.510 Small business assistance program.

On October 22, 1993, the Administrator of the District of Columbia Environmental Regulation Administration submitted a plan for the establishment and implementation of a Small Business Technical and Environmental Compliance Assistance Program as a state implementation plan revision (SIP), as required by title V of the Clean Air Act. EPA approved the Small Business Technical and Environmental Compliance Assistance Program on August 17, 1994 and made it part of the District of Columbia SIP. As with all components of the SIP, the District of Columbia must implement the program as submitted and approved by EPA.

[59 FR 42168, Aug. 17, 1994]

§ 52.515 Original identification of plan section.

(a) This section identifies the original ''Air Implementation Plan for the District of Columbia'' and all revisions submitted by the District of Columbia that were federally approved prior to July 1, 1998. The information in this section is available in the 40 CFR, part 52 edition revised as of July 1, 1999, the 40 CFR, part 52, Volume 1 of 2 (§§ 52.01 to 52.1018) editions revised as of July 1, 2000 through July 1, 2011, and the 40 CFR, part 52, Volume 1 of 3 (§§ 52.01 to 52.1018) edition revised as of July 1, 2012.

(b) [Reserved]

[78 FR 33984, June 6, 2013]

Subpart K—Florida

§ 52.519 [Reserved]

§ 52.520 Identification of plan.

(a) *Purpose and scope.* This section sets forth the applicable State implementation plan for Florida under section 110 of the Clean Air Act, 42 U.S.C.

7401, and 40 CFR part 51 to meet national ambient air quality standards.

(b) *Incorporation by reference.* (1) Material listed in paragraphs (c) and (d) of this section with an EPA approval date prior to October 1, 2017, was approved for incorporation by reference by the Director of the Federal Register in accordance with 5 U.S.C. 552(a) and 1 CFR part 51. Material is incorporated as it exists on the date of the approval, and notice of any change in the material will be published in the FEDERAL REGISTER. Entries in paragraphs (c) and (d) of this section with EPA approval dates after October 1, 2017, for Florida will be incorporated by reference in the next update to the SIP compilation.

(2) EPA Region 4 certifies that the rules/regulations provided by EPA in the SIP compilation at the addresses in paragraph (b)(3) of this section are an exact duplicate of the officially promulgated State rules/regulations which have been approved as part of the State Implementation Plan as of the dates referenced in paragraph (b)(1) of this section.

(3) Copies of the materials incorporated by reference may be inspected at the Region 4 EPA Office at 61 Forsyth Street SW, Atlanta, GA 30303. To obtain the material, please call (404) 562–9022. You may inspect the material with an EPA approval date prior to October 1, 2017, for Florida at the National Archives and Records Administration. For information on the availability of this material at NARA go to: *http://www.archives.gov/federal-register/cfr/ibr-locations.html.*

(c) *EPA Approved Florida Regulations.*

EPA APPROVED FLORIDA REGULATIONS

State citation (section)	Title/subject	State effective date	EPA approval date	Explanation
Chapter 62–204 Air Pollution Control—General Provisions				
62–204.100	Purpose and Scope	3/13/1996	6/16/1999, 64 FR 32353.	
62–204.200	Definitions	2/12/2006	6/27/2008, 73 FR 36435.	
62–204.220	Ambient Air Quality Protection.	3/13/1996	6/16/1999, 64 FR 32346.	
62–204.240	Ambient Air Quality Standards.	3/13/1996	6/16/1999, 64 FR 32346.	
62–204.260	Prevention of Significant Deterioration Maximum Allowable Increases (PSD Increments).	2/12/2006	6/27/2008, 73 FR 36435.	
62–204.320	Procedures for Designation and Redesignation of Areas.	3/13/1996	6/16/1999, 64 FR 32346.	
62–204.340	Designation of Attainment, Nonattainment, and Maintenance Areas.	3/13/1996	6/16/1999, 64 FR 32346.	
62–204.360	Designation of Prevention of Significant Deterioration Areas.	3/13/1996	6/16/1999, 64 FR 32346.	
62–204.400	Public Notice and Hearing Requirements for State Implementation Plan Revisions.	11/30/1994	6/16/1999, 64 FR 32353.	
62–204.500	Conformity	8/31/1998	8/11/2003, 68 FR 47468	Except for the incorporation by reference of 40 CFR 93.104(e) of the Transportation Conformity Rule.
Chapter 62–210 Stationary Sources—General Requirements				
62–210.200	Definitions	3/28/2012	10/6/2017, 82 FR 46682	Selected definitions are approved into the SIP.
62–210.220	Small Business Assistance Program.	10/6/08	7/3/2017, 82 FR 30767.	
62–210.300	Permits Required	5/9/2007	6/1/2009, 63 FR 26103.	
62–210.310	Air General Permits	6/29/2011	10/6/2017, 82 FR 46682.	

EPA APPROVED FLORIDA REGULATIONS—Continued

State citation (section)	Title/subject	State effective date	EPA approval date	Explanation
62–210.350	Public Notice and Comment.	10/12/2008	10/6/2017, 82 FR 46682	Excludes revisions state effective February 11, 1999, which added 62–210.350(1)(c) avs 62–210.350(4)(a)2, and revised 62–210.350(4)(b).
62–210.360	Administrative Permit Corrections.	11/23/1994	6/16/1999, 64 FR 32346.	
62–210.370	Emissions Computation and Reporting.	2/2/2006	6/27/2008, 73 FR 36435.	
62–210.550	Stack Height Policy	11/23/1994	6/16/1999, 64 FR 32346.	
62–210.650	Circumvention	10/15/1992	10/20/1994, 59 FR 52916.	
62–210.700	Excess Emissions	11/23/1994	6/16/1999, 64 FR 32346.	
62–210.900	Forms and Instructions	2/9/1993	11/7/1994, 59 FR 46157.	
Chapter 62–212 Stationary Sources—Preconstruction Review				
62–212.300	General Preconstruction Review Requirements.	6/29/2009	4/12/2011, 76 FR 20239.	
62–212.400	Prevention of Significant Deterioration.	3/28/2012	9/19/2012, 77 FR 58027	As of September 19, 2012, 61–212.400 does not include Florida's revision to adopt the $PM_{2.5}$ SILs threshold and provisions (as promulgated in the October 20, 2010, $PM_{2.5}$ PSD Increment-SILs-SMC Rule at 40 CFR 52.21(k)(2)).
62–212.500	Preconstruction Review for Nonattainment Areas.	2/2/2006	6/27/2008, 73 FR 36435.	
62–212.720	Actuals Plantwide Applicability Limits (PALs).	12/17/2013	7/3/2017, 82 FR 30767.	
Chapter 62–243 Tampering With Motor Vehicle Air Pollution Control Equipment				
62–243.100	Purpose and Scope	5/29/1990	6/9/1992, 57 FR 24370.	
62–243.200	Definitions	1/2/1991	6/9/1992, 57 FR 24378.	
62–243.300	Exemptions	1/2/1991	6/9/1992, 57 FR 24378.	
62–243.400	Prohibitions	1/2/1991	6/9/1992, 57 FR 24378.	
62–243.500	Certification	1/2/1991	6/9/1992, 57 FR 24378.	
62–243.600	Enforcement	1/2/1991	6/9/1992, 57 FR 24378.	
62–243.700	Penalties	5/29/1990	6/9/1992, 57 FR 24370.	
Chapter 62–244 Visible Emissions From Motor Vehicles				
62–244.100	Purpose and Scope	2/21/1990	6/9/1992, 57 FR 24370.	
62–244.200	Definitions	2/21/1990	6/9/1992, 57 FR 24370.	
62–244.300	Exemptions	2/21/1990	6/9/1992, 57 FR 24370.	
62–244.400	Prohibitions	2/21/1990	6/9/1992, 57 FR 24370.	
62–244.500	Enforcement	2/21/1990	6/9/1992, 57 FR 24370.	
62–244.600	Penalties	2/21/1990	6/9/1992, 57 FR 24370.	
Chapter 62–252 Gasoline Vapor Control				
62–252.300	Gasoline Dispensing Facilities Stage I Vapor Recovery.	5/1/2015	8/12/2015, 80 FR 48259.	
Chapter 62–256 Open Burning and Frost Protection Fires				
62–256.100	Declaration and Intent	12/09/1975	11/1/1977, 42 FR 57124.	
62–256.200	Definitions	11/30/1994	6/16/1999, 64 FR 32346.	
62–256.300	Prohibitions	11/30/1994	6/16/1999, 64 FR 32346.	
62–256.400	Agricultural and Silvicultural Fires.	7/1/1971	5/31/1972, 37 FR 10842.	
62–256.450	Burning for Cold or Frost Protection.	6/27/1991	9/9/1994, 59 FR 46552.	
62–256.500	Land Clearing	11/30/1994	6/16/1999, 64 FR 32346.	

EPA APPROVED FLORIDA REGULATIONS—Continued

State citation (section)	Title/subject	State effective date	EPA approval date	Explanation
62–256.600	Industrial, Commercial, Municipal, and Research Open Burning.	7/1/1971	5/31/1972, 37 FR 10842.	
62–256.700	Open Burning Allowed	11/30/1994	6/16/1999, 64 FR 32346.	
62–256.800	Effective Date	7/1/1971	5/31/1972, 37 FR 10842.	
Chapter 62–296 Stationary Sources—Emission Standards				
62–296.100	Purpose and Scope	10/6/2008	10/6/2017, 82 FR 46682.	
62–296.320	General Pollutant Emission Limiting Standards.	3/13/1996	6/16/1999, 64 FR 32346.	
62–296.340	Best Available Retrofit Technology.	1/31/2007	8/29/2013, 78 FR 53250.	
62–296.401	Incinerators	3/13/1996	6/16/1999, 64 FR 32346.	
62–296.402	Sulfuric Acid Plants	3/13/1996	6/16/1999, 64 FR 32346.	
62–296.403	Phosphate Processing	3/13/1996	6/16/1999, 64 FR 32346.	
62–296.404	Kraft (Sulfate) Pulp Mills and Tall Oil Plants.	3/13/1996	6/16/1999, 64 FR 32346.	
62–296.405	Fossil Fuel Steam Generators with more than 250 million Btu per Hour Heat Input.	3/2/1999	10/6/2017, 82 FR 46682.	
62–296.406	Fossil Fuel Steam Generator with less than 250 million Btu per Hour Heat Input, New and Existing Emissions Units.	3/2/1999	10/6/2017, 82 FR 46682.	
62–296.408	Nitric Acid Plants	11/23/1994	6/16/1999, 64 FR 32346.	
62–296.409	Sulfur Recovery Plants	11/23/1994	6/16/1999, 64 FR 32346.	
62–296.410	Carbonaceous Fuel Burning Equipment.	11/23/1994	6/16/1999, 64 FR 32346.	
62–296.412	Dry Cleaning Facilities	3/11/2010	10/6/2017, 82 FR 46682.	
62–296.414	Concrete Batching Plants	1/10/2007	10/6/2017, 82 FR 46682.	
62–296.415	Soil Thermal Treatment Facilities.	3/13/1996	6/16/1999, 64 FR 32346.	
62–296.418	Bulk Gasoline Plants	3/11/2010	10/6/2017, 82 FR 46682.	
62–296.470	Implementation of Federal Clean Air Interstate Rule.	4/1/2007	10/12/07, 72 FR 58016.	
62–296.500	Reasonably Available Control Technology (RACT)—Volatile Organic Compounds (VOC) and Nitrogen Oxides (NO_X) Emitting Facilities.	3/11/2010	10/6/2017, 82 FR 46682.	
62–296.501	Can Coating	11/23/1994	6/16/1999, 64 FR 32346.	
62–296.502	Coil Coating	11/23/1994	6/16/1999, 64 FR 32346.	
62–296.503	Paper Coating	11/23/1994	6/16/1999, 64 FR 32346.	
62–296.504	Fabric and Vinyl Coating	11/23/1994	6/16/1999, 64 FR 32346.	
62–296.505	Metal Furniture Coating	11/23/1994	6/16/1999, 64 FR 32346.	
62–296.506	Surface Coating of Large Appliances.	11/23/1994	6/16/1999, 64 FR 32346.	
62–296.507	Magnet Wire Coating	11/23/1994	6/16/1999, 64 FR 32346.	
62–296.508	Petroleum Liquid Storage	10/6/2008	10/6/2017, 82 FR 46682	Amendments effective 10/6/08.
62–296.510	Bulk Gasoline Terminals	11/23/1994	6/16/1999, 64 FR 32346.	
62–296.511	Solvent Metal Cleaning	6/5/1996	01/16/2003, 68 FR 2204.	
62–296.512	Cutback Asphalt	11/23/1994	6/16/1999, 64 FR 32346.	
62–296.513	Surface Coating of Miscellaneous Metal Parts and Products.	11/23/1994	6/16/1999, 64 FR 32346.	
62–296.514	Surface Coating of Flat Wood Paneling.	11/23/1994	6/16/1999, 64 FR 32346.	
62–296.515	Graphic Arts Systems	11/23/1994	6/16/1999, 64 FR 32346.	
62–296.516	Petroleum Liquid Storage Tanks with External Floating Roofs.	11/23/1994	6/16/1999, 64 FR 32346.	

EPA APPROVED FLORIDA REGULATIONS—Continued

State citation (section)	Title/subject	State effective date	EPA approval date	Explanation
62–296.570	Reasonably Available Control Technology (RACT)—Requirements for Major VOC and NO_X—Emitting Facilities.	11/23/1994	6/16/1999, 64 FR 32346.	
62–296.600	Reasonably Available Control Technology (RACT)—Lead.	3/13/1996	6/16/1999, 64 FR 32346.	
62–296.601	Lead Processing Operations in General.	8/8/1994	9/18/1996, 61 FR 49064.	
62–296.602	Primary Lead Acid Battery Manufacturing Operations.	3/13/1996	9/18/1996, 61 FR 49064.	
62–296.603	Secondary Lead Smelting Operations.	8/8/1994	9/18/1996, 61 FR 49064.	
62–296.604	Electric Arc Furnace Equipped Secondary Steel Manufacturing Operations.	8/8/1994	9/18/1996, 61 FR 49064.	
62–296.605	Lead Oxide Handling Operations.	8/8/1994	9/18/1996, 61 FR 49064.	
62–296.700	Reasonably Available Control Technology (RACT)—Particulate Matter.	11/23/1994	6/16/1999, 64 FR 32346.	
62–296.701	Portland Cement Plants	11/23/1994	6/16/1999, 64 FR 32346.	
62–296.702	Fossil Fuel Steam Generators.	11/23/1994	6/16/1999, 64 FR 32346.	
62–296.703	Carbonaceous Fuel Burners.	11/23/1994	6/16/1999, 64 FR 32346.	
62–296.704	Asphalt Concrete Plants	11/23/1994	6/16/1999, 64 FR 32346.	
62–296.705	Phosphate Processing operations.	11/23/1994	6/16/1999, 64 FR 32346.	
62–296.706	Glass Manufacturing Process.	11/23/1994	6/16/1999, 64 FR 32346.	
62–296.707	Electric Arc Furnaces	11/23/1994	6/16/1999, 64 FR 32346.	
62–296.708	Sweat of Pot Furnaces	11/23/1994	6/16/1999, 64 FR 32346.	
62–296.709	Lime Kilns	11/23/1994	6/16/1999, 64 FR 32346.	
62–296.710	Smelt Dissolving Tanks	11/23/1994	6/16/1999, 64 FR 32346.	
62–296.711	Materials Handling, Sizing, Screening, Crushing and Grinding operations.	11/23/1994	6/16/1999, 64 FR 32346.	
62–296.712	Miscellaneous Manufacturing Process Operations.	11/23/1994	6/16/1999, 64 FR 32346.	
Chapter 62–297 Stationary Sources—Emissions Monitoring				
62–297.310	General Emissions Test Requirements.	3/9/2015	10/6/2017, 82 FR 46682.	
62–297.440	Supplementary Test Procedures.	7/10/2014	4/2/2018, 83 FR 13875.	
62–297.450	EPA VOC Capture Efficiency Test Procedures.	7/10/2014	4/2/2018, 83 FR 13875.	
62–297.620	Exceptions and Approval of Alternate Procedures and Requirements.	11/23/1994	6/16/1999, 64 FR 32346.	
State Statutes				
112.3143(4)	Voting Conflict	4/19/2012	7/30/2012, 77 FR 44485	To satisfy the requirements of sections 128 and 110(a)(2)(E)(ii).
112.3144	Full and Public Disclosure of Financial Interests.	4/19/2012	7/30/2012, 77 FR 44485	To satisfy the requirements of sections 128 and 110(a)(2)(E)(ii).
403.131	Injunctive relief, remedies	4/19/2012	7/30/2012, 77 FR 44485	To satisfy the requirements of section 110(a)(2)(G).

EPA APPROVED FLORIDA REGULATIONS—Continued

State citation (section)	Title/subject	State effective date	EPA approval date	Explanation
120.569	Decisions which affect substantial interests.	4/19/2012	7/30/2012, 77 FR 44485	To satisfy the requirements of section 110(a)(2)(G).

(d) *EPA-approved State Source-specific requirements.*

EPA-APPROVED FLORIDA SOURCE-SPECIFIC REQUIREMENTS

Name of source	Permit No.	State effective date	EPA approval date	Explanation
Harry S Truman, animal import center.	NA	11/26/1996	1/19/2000, 65 FR 2882.	
Martin Gas Sales, Inc	0570477–007–AC	1/17/2003	5/1/2003, 68 FR 23209.	
Broward County Aviation Department.		8/15/2003	6/17/2003, 69 FR 33862	Order Granting Variance from Rule 62–252.400.
Lockheed Martin Aeronautics Company.		4/16/2005	11/28/2006, 71 FR 68745	Requirement that Lockheed Martin Aeronautics Company comply with EPA's Aerospace CTG at its Pinellas County facility.
Combs Oil Company		7/31/2009	9/25/2015, 80 FR 57727	Order Granting Variance from Rule 62–296.418(2)(b)2.
Mosaic Fertilizer, LLC	Air Permit No. 0570008–080–AC.	1/15/2015	7/3/2017, 82 FR 30749	Specific Conditions pertaining to: EU004; EU005; and EU006.
Rayonier Performance Fibers, LLC.	Air Permit No. 0890004–036–AC.	4/12/2012	7/3/2017, 82 FR 30749	Specific Conditions pertaining to: EU005; EU006; and EU022.
Tampa Electric Company—Big Bend Station.	Air Permit No. 0570039–074–AC.	2/26/2015	7/3/2017, 82 FR 30749	Specific Conditions pertaining to: EU001; EU002; EU003 and EU004.
WestRock, LLC	Air Permit No. 0890003–046–AC.	1/9/2015	7/3/2017, 82 FR 30749	Specific Conditions pertaining to: EU006; EU015; EU007 and EU011.

(e) *EPA-approved Florida non-regulatory provisions.*

EPA-APPROVED FLORIDA NON-REGULATORY PROVISIONS

Provision	State effective date	EPA approval date	FEDERAL REGISTER, notice	Explanation
Revision to Maintenance Plan for Southeast Florida Area.	12/20/2002	2/13/2004	69 FR 7132	10 year update.
Revision to Maintenance Plan for the Tampa, Florida Area.	12/20/2002	3/29/2004	69 FR 16172	10 year update.
Revision to Maintenance Plan Update for Jacksonville Area, Florida.	12/20/2002	7/22/2003	68 FR 43315	
110(a)(1) Maintenance Plan for the Southeast Florida Area.	7/2/2009	7/26/2010	75 FR 29671	110(a)(1) maintenance plan for 1997 8-hour ozone NAAQS.
110(a)(1) Maintenance Plan for the Tampa, Florida Area.	7/2/2009	7/26/2010	75 FR 29671	110(a)(1) maintenance plan for 1997 8-hour ozone NAAQS.
110(a)(1) Maintenance Plan for the Jacksonville, Florida Area.	7/2/2009	7/26/2010	75 FR 29671	110(a)(1) maintenance plan for 1997 8-hour ozone NAAQS.
110(a)(1) and (2) Infrastructure Requirements for the 1997 8-Hour Ozone National Ambient Air Quality Standards.	12/13/2007	7/30/2012	77 FR 44485	
Section 128 Requirements	5/24/2012	7/30/2012	77 FR 44485	

EPA-APPROVED FLORIDA NON-REGULATORY PROVISIONS—Continued

Provision	State effective date	EPA approval date	FEDERAL REGISTER, notice	Explanation
Sections 110(a)(2)(E)(ii) and (G) Infrastructure Requirements for the 1997 8-Hour Ozone National Ambient Air Quality Standards.	5/24/2012	7/30/2012	77 FR 44485	
110(a)(2)(D)(i)(I) Infrastructure Requirements for the 2006 24-hour $PM_{2.5}$ NAAQS.	9/23/2009	10/11/2012	77 FR 61724	EPA partially disapproved this SIP submission to the extent that it relied on the Clean Air Interstate Rule to meet the 110(a)(2)(D)(i)(I) requirements for the 2006 24-hour $PM_{2.5}$ NAAQS.
110(a)(1) and (2) Infrastructure Requirements for 1997 Fine Particulate Matter National Ambient Air Quality Standards.	4/18/2008	11/8/2012	77 FR 66927	With the exception of section 110(a)(2)(D)(i).
110(a)(1) and (2) Infrastructure Requirements for 2006 Fine Particulate Matter National Ambient Air Quality Standards.	9/23/2009	11/8/2012	77 FR 66927	With the exception of section 110(a)(2)(D)(i).
Portion of Regional Haze Plan Amendment submitted on September 17, 2012.	9/17/2012	11/29/2012	77 FR 71111	Only the BART determinations approved in 77 FR 71111 are incorporated.
110(a)(1) and (2) Infrastructure Requirements for 1997 Fine Particulate Matter National Ambient Air Quality Standards.	4/18/2008	4/3/2013	78 FR 19998	EPA disapproved the State's prong 3 of section 110(a)(2)(D)(i) as it relates to GHG PSD permitting requirements.
110(a)(1) and (2) Infrastructure Requirements for 2006 Fine Particulate Matter National Ambient Air Quality Standards.	9/23/2009	4/3/2013	78 FR 19998	EPA disapproved the State's prong 3 of section 110(a)(2)(D)(i) as it relates to GHG PSD permitting requirements.
Initial Regional Haze Plan	3/19/2010	8/29/2013	78 FR 53250	
Regional Haze Plan Amendment 1	8/31/2010	8/29/2013	78 FR 53250	
Regional Haze Plan Amendment 2	9/17/2012	8/29/2013	78 FR 53250	Remaining Portion of Regional Haze Plan Amendment not approved on November 29, 2012.
Progress Energy Permit (Air Permit No. 0170004–038–AC).	10/15/2012	8/29/2013	78 FR 53250	
Update to October 15, 2013, Progress Energy Permit (Air Permit No. 0170004–038–AC).	5/2/2013	8/29/2013	78 FR 53250	
110(a)(1) and (2) Infrastructure Requirements for the 2008 8-Hour Ozone National Ambient Air Quality Standards.	10/31/2011	11/1/2013	78 FR 65559	With the exception of section 110(a)(2)(D)(i)(I) concerning interstate transport; section 110(a)(2)(D)(i)(II) concerning visibility requirements; and the portions of sections 110(a)(2)(C), prong 3 of 110(a)(2)(D)(i), and 110(a)(2)(J) related to the regulation of GHG emissions, which are being disapproved.
RVP Update for Florida 1997 8-hour Ozone Maintenance Plans.	8/15/2013	1/6/2014	79 FR 573	
110(a)(1) and (2) Infrastructure Requirements for the 1997 Fine Particulate Matter National Ambient Air Quality Standards.	4/18/2008	8/25/2014	79 FR 50554	Addressing prong 4 of section 110(a)(2)(D)(i) only.
110(a)(1) and (2) Infrastructure Requirements for the 2006 Fine Particulate Matter National Ambient Air Quality Standards.	9/23/2009	8/25/2014	79 FR 50554	Addressing prong 4 of section 110(a)(2)(D)(i) only.
110(a)(1) and (2) Infrastructure Requirements for the 2008 Ozone National Ambient Air Quality Standards.	10/31/2011	8/25/2014	79 FR 50554	Addressing prong 4 of section 110(a)(2)(D)(i) only.
110(a)(1) and (2) Infrastructure Requirements for the 2008 Lead NAAQS.	10/14/2011	3/18/2015	80 FR 14019	Addressing the PSD permitting requirements of sections 110(a)(2)(C), 110(a)(2)(D)(i)(II) (prong 3) and 110(a)(2)(J) only.

EPA-APPROVED FLORIDA NON-REGULATORY PROVISIONS—Continued

Provision	State effective date	EPA approval date	FEDERAL REGISTER, notice	Explanation
110(a)(1) and (2) Infrastructure Requirements for the 2010 NO_2 NAAQS.	1/22/2013	3/18/2015	80 FR 14019	Addressing the PSD permitting requirements of sections 110(a)(2)(C), 110(a)(2)(D)(i)(II) (prong 3) and 110(a)(2)(J) only.
2008 Lead Attainment Demonstration for Hillsborough Area.	6/29/2012	4/16/2015	80 FR 20441	
2008 Lead Attainment Demonstration for Hillsborough Area Amendment.	6/27/2013	4/16/2015	80 FR 20441	
110(a)(1) and (2) Infrastructure Requirements for the 2008 Lead National Ambient Air Quality Standards.	10/14/2011	9/24/2015	80 FR 57538	With the exception of provisions pertaining to PSD permitting requirements in sections 110(a)(2)(C), prong 3 of D(i) and (J).
Regional Haze Plan Amendment 3	4/30/2014	10/23/2015	80 FR 64344	Establishes NO_X BART emissions limit for Unit 1 at the Lakeland Electric—C.D. McIntosh Power Plant and includes FDEP Permit No. 1050004–034–AC.
March 2015 Regional Haze Progress Report	3/10/2015	8/2/2016	81 FR 50628	
110(a)(1) and (2) Infrastructure Requirements for the 2010 1-hour Primary SO_2 National Ambient Air Quality Standards.	6/3/2013	9/30/2016	81 FR 67179	With the exception of section for provisions relating to 110(a)(2)(D)(i)(I) (prongs 1 and 2) concerning interstate transport requirements.
110(a)(1) and (2) Infrastructure Requirements for the 2010 1-hour NO_2 NAAQS.	1/22/2013	11/23/2016	81 FR 84479	With the exception of sections: 110(a)(2)(B) Concerning ambient air quality monitoring and data system; 110(a)(2)(C) and (J) concerning PSD permitting requirements; and 110(a)(2)(D)(i)(I) and (II) (prongs 1 through 3) concerning interstate transport requirements.
110(a)(1) and (2) Infrastructure Requirements for the 2012 Annual $PM_{2.5}$ NAAQS.	10/15/2015	4/7/2017	82 FR 16920	With the exception of section 110(a)(2)(D)(i)(I) and (II) (prongs 1 and 2).
2010 1-hour SO_2 Attainment Demonstration for the Hillsborough Area.	4/3/2015	7/3/2017	82 FR 30749	
2010 1-hour SO_2 Attainment Demonstration for the Nassau Area.	4/3/2015	7/3/2017	82 FR 30749	
110(a)(1) and (2) Infrastructure Requirements for the 2010 1-hour NO_2 NAAQS (Element B only).	1/22/2013	8/10/2017	82 FR 37310	Addressing section 110(a)(2)(B) concerning ambient air quality monitoring and data system only.
110(a)(1) and (2) Infrastructure Requirements for the 2010 1-hour NO_2 NAAQS.	2/3/2017	10/16/2017	82 FR 47983	Addressing Prongs 1 and 2 of section 110(a)(2)(D)(i) only.

[64 FR 32348, June 16, 1999]

EDITORIAL NOTE: For FEDERAL REGISTER citations affecting § 52.520, see the List of CFR Sections Affected, which appears in the Finding Aids section of the printed volume and at *www.fdsys.gov*.

§ 52.521 Classification of regions.

The Florida plan was evaluated on the basis of the following classifications:

Air quality control region	Pollutant				
	Particulate matter	Sulfur oxides	Nitrogen dioxide	Carbon monoxide	Photochemical oxidants (hydrocarbons)
Mobile (Alabama)-Pensacola-Panama City (Florida)-Southern Mississippi Interstate	I	I	III	III	I
Jacksonville (Florida)-Brunswick (Georgia) Interstate	I	II	III	III	I
West Central Florida Intrastate	I	I	III	III	III
Central Florida Intrastate	II	III	III	III	III
Southwest Florida Intrastate	III	III	III	III	III
Southeast Florida Intrastate	II	III	III	III	III

[37 FR 10858, May 31, 1972, as amended 39 FR 16346, May 8, 1974]

§ 52.522 Approval status.

(a) With the exceptions set forth in this subpart, the Administrator approves Florida's plan for the attainment and maintenance of the national standards under section 110 of the Clean Air Act. Furthermore, the Administrator finds that the plan satisfies all requirements of part D, title 1, of the Clean Air Act as amended in 1977.

(b) *Disapproval.* Submittal from the State of Florida, through the Florida Department of Environmental Protection (FDEP) on October 31, 2011, to address the Clean Air Act (CAA) sections 110(a)(2)(C), 110(a)(2)(D)(i)(II), and 110(a)(2)(J) for the 2008 8-hour Ozone National Ambient Air Quality Standards related to prevention of significant deterioration (PSD) requirements for the regulation of greenhouse gas emissions. EPA is disapproving FDEP's submittal with respect to the PSD requirements of CAA sections 110(a)(2)(C), 110(a)(2)(D)(i)(II), and 110(a)(2)(J) for the 2008 8-hour Ozone National Ambient Air Quality Standards related to PSD requirements for the regulation of greenhouse gas emissions.

[45 FR 17143, Mar. 18, 1980, as amended at 78 FR 65561, Nov. 1, 2013; 79 FR 30050, May 27, 2014]

§ 52.523 Control strategy: Ozone

(*a) Disapproval.* EPA is disapproving portions of Florida's infrastructure SIP for the 1997 8-hour ozone NAAQS regarding the State's ability to provide adequate legal authority for the implementation of a Greenhouse Gas Prevention of Significant Deterioration program, specifically with respect to sections 110(a)(2)(C) and 110(a)(2)(J). A FIP is currently in place and approved for Florida at 40 CFR 52.37 for these requirements.

(b) [Reserved]

[77 FR 44488, July 30, 2012]

§ 52.524 Compliance schedule.

(a) The information in this section is available in the 40 CFR, part 52 edition revised as of July 1, 1999, the 40 CFR, part 52, Volume 1 of 2 (§§ 52.01 to 52.1018) editions revised as of July 1, 2000 through July 1, 2011, and the 40 CFR, part 52, Volume 1 of 3 (§§ 52.01 to 52.1018) editions revised as of July 1, 2012.

(b) [Reserved]

[79 FR 30050, May 27, 2014]

§ 52.525 General requirements.

(a) The requirements of § 51.116(c) of this chapter are not met since the legal authority to provide for public availability of emission data is inadequate.

(b) Regulation for public availability of emission data. (1) Any person who cannot obtain emission data from the Agency responsible for making emission data available to the public, as specified in the applicable plan, concerning emissions from any source subject to emission limitations which are part of the approved plan may request that the appropriate Regional Administrator obtain and make public such data. Within 30 days after receipt of any such written request, the Regional Administrator shall require the owner or operator of any such source to submit information within 30 days on the nature and amounts of emissions from such source and any other information

as may be deemed necessary by the Regional Administrator to determine whether such source is in compliance with applicable emission limitations or other control measures that are part of the applicable plan.

(2) Commencing after the initial notification by the Regional Administrator pursuant to paragraph (b)(1) of this section, the owner or operator of the source shall maintain records of the nature and amounts of emissions from such source and any other information as may be deemed necessary by the Regional Administrator to determine whether such source is in compliance with applicable emission limitations or other control measures that are part of the plan. The information recorded shall be summarized and reported to the Regional Administrator, on forms furnished by the Regional Administrator, and shall be submitted within 45 days after the end of the reporting period. Reporting periods are January 1 to June 30 and July 1 to December 31.

(3) Information recorded by the owner or operator and copies of this summarizing report submitted to the Regional Administrator shall be retained by the owner or operator for 2 years after the date on which the pertinent report is submitted.

(4) Emission data obtained from owners or operators of stationary sources will be correlated with applicable emission limitations and other control measures that are part of the applicable plan and will be available at the appropriate regional office and at other locations in the state designated by the Regional Administrator.

[39 FR 34536, Sept. 26, 1974, as amended at 40 FR 55328, Nov. 28, 1975; 51 FR 40676, Nov. 7, 1986]

§ 52.526 Legal authority.

(a) The requirements of § 51.230(f) of this chapter are not met, since section 403.111 of the Florida Statutes could, in some circumstances, prohibit the disclosure of emission data to the public. Therefore, section 403.111 is disapproved.

[39 FR 34536, Sept. 26, 1974, as amended at 51 FR 40676, Nov. 7, 1986]

§ 52.527 [Reserved]

§ 52.528 Control strategy: Sulfur oxides and particulate matter.

(a) In a letter dated October 10, 1986, the Florida Department of Environmental Regulation certified that no emission limits in the State's plan are based on dispersion techniques not permitted by EPA's stack height rules.

(b) The variance granted to the Turkey Point and Port Everglades plants of Florida Power and Light Company from the particulate emission limits of the plan is disapproved because the relaxed limits would cause violation of the Class I increment for sulfur dioxide in the Everglades National Park. These plants must meet the 0.1#/MMBTU particulate limit of the plan.

[48 FR 33868, July 26, 1983, as amended at 54 FR 25455, June 15, 1989]

§ 52.529 [Reserved]

§ 52.530 Significant deterioration of air quality.

(a) EPA approves the Florida Prevention of Significant Deterioration program, as incorporated into this chapter, for power plants subject to the Florida Power Plant Siting Act.

(b) Pursuant to part C, subpart 1 of the Clean Air Act, EPA is approving a December 19, 2013 SIP revision submitted by the State of Florida, through the Florida Department of Environmental Protection (FDEP), Division of Air Resource Management that establishes prevention of significant deterioration (PSD) applicability thresholds for greenhouse gas (GHG) emissions at the same emissions thresholds and in the same timeframes as those specified by EPA in the GHG Tailoring Rule. This approval gives FDEP the authority to regulate GHG-emitting sources and issue GHG PSD permits. FDEP's December 19, 2013 SIP revision also includes a GHG PSD Permit Transition Plan which governs the transition from EPA administering GHG PSD permitting requirements for Florida sources under a Federal Implementation Plan (FIP) to the State administering GHG PSD permitting requirements under its approved SIP. Under this GHG PSD Permit Transition Plan, FDEP will administer and enforce GHG PSD permits

issued by EPA to Florida sources under the GHG PSD FIP. FDEP's authority over these existing EPA-issued GHG PSD permits includes the authority for FDEP to conduct general administration of these existing permits, authority to process and issue any and all subsequent permit actions relating to such permits, and authority to enforce such permits.

(c) All applications and other information required pursuant to § 52.21 of this part from sources located in the State of Florida shall be submitted to the State agency, Florida Department of Environmental Protection, Division of Air Resources Management, 2600 Blair Stone Road, MS 5500, Tallahassee, Florida 32399–2400, rather than to EPA's Region 4 office.

(d) The requirements of sections 160 through 165 of the Clean Air Act are not met since the Florida plan, as submitted, does not apply to certain sources. Therefore, the provisions of § 52.21 except paragraph (a)(1) are hereby incorporated by reference and made a part of the Florida plan for:

(1) Sources proposing to locate on Indian reservations in Florida; and

(2) Permits issued by EPA prior to approval of the Florida PSD rule.

[45 FR 52741, Aug. 7, 1980, as amended at 46 FR 17020, Mar. 17, 1981; 48 FR 52716, Nov. 22, 1983; 68 FR 11322, Mar. 10, 2003; 68 FR 74488, Dec. 24, 2003; 72 FR 29276, May 25, 2007; 73 FR 36442, June 27, 2008; 74 FR 55143, Oct. 27, 2009; 79 FR 28612, May 19, 2014]

§ 52.532 [Reserved]

§ 52.533 Source surveillance.

The plan lacks test methods for several source categories. As required by § 52.12(c)(1) of this part, EPA test methods (found at 40 CFR part 60) will be used by EPA to determine compliance with the following emission limiting standards:

(a) Particulate emissions from citrus plants controlled by a scrubber and subject to the process weight table (submitted as 17–2.05(2) and reformatted as 17–2.610(1)1.a).

(b) TRS emissions from recovery furnaces at kraft pulp mills (submitted as 17–2.05(6)D and reformatted as 17–2.600(4)1).

(c) Sulfur dioxide emissions from fossil fuel steam sources (submitted as 17–2.05(6)E and reformatted as 17–2.600 (5) and (6)).

(d) Emissions from portland cement plants (submitted as 17–2.05(6)F and reformatted as 17–2.600(7)).

(e) Particulate and visible emissions from carbonaceous fuel burning equipment (submitted as 17–2.05(6)I and reformatted as 17–2.600(10)).

[47 FR 32116, July 26, 1982]

§ 52.534 Visibility protection.

(a) The requirements of section 169A of the Clean Air Act are not met because the plan does not include approvable procedures meeting the requirements of 40 CFR 51.305 and 51.307 for protection of visibility in mandatory Class I Federal areas.

(b) Regulations for visibility new source review. The provisions of § 52.28 are hereby incorporated and made part of the applicable plan for the State of Florida.

[51 FR 5505, Feb. 13, 1986]

§ 52.536 Original identification of plan section.

(a) This section identified the original ''Air Implementation Plan for the State of Florida'' and all revisions submitted by Florida that were federally approved prior to July 1, 1998. The information in this section is available in the 40 CFR, part 52 edition revised as of July 1, 1999, the 40 CFR, part 52, Volume 1 of 2 (§§ 52.01 to 52.1018) editions revised as of July 1, 2000 through July 1, 2011, and the 40 CFR, part 52, Volume 1 of 3 (§§ 52.01 to 52.1018) editions revised as of July 1, 2012.

(b)–(c) [Reserved]

[79 FR 30050, May 27, 2014]

§ 52.540 Interstate pollutant transport provisions; What are the FIP requirements for decreases in emissions of nitrogen oxides?

(a) The owner and operator of each source and each unit located in the State of Florida and Indian country within the borders of the State and for which requirements are set forth under the CSAPR NO_X Ozone Season Group 1 Trading Program in subpart BBBBB of part 97 of this chapter must comply

with such requirements with regard to emissions occurring in 2015 and 2016.

(b) [Reserved]

[76 FR 48362, Aug. 8, 2011, as amended at 81 FR 74594, Oct. 26, 2016]

Subpart L—Georgia

§ 52.569 [Reserved]

§ 52.570 Identification of plan.

(a) *Purpose and scope.* This section sets forth the applicable State implementation plan for Georgia under section 110 of the Clean Air Act, 42 U.S.C. 7401, and 40 CFR part 51 to meet national ambient air quality standards.

(b) *Incorporation by reference.* (1) Material listed in paragraph (c) and (d) of this section with an EPA approval date prior to January 1, 2017, for Georgia was approved for incorporation by reference by the Director of the Federal Register in accordance with 5 U.S.C. 552(a) and 1 CFR part 51. Material is incorporated as it exists on the date of the approval, and notice of any change in the material will be published in the FEDERAL REGISTER. Entries in paragraph (c) and (d) of this section with EPA approval dates after January 1, 2017, for Georgia will be incorporated by reference in the next update to the SIP compilation.

(2) EPA Region 4 certifies that the rules/regulations provided by EPA in the SIP compilation at the addresses in paragraph (b)(3) of this section are an exact duplicate of the officially promulgated State rules/regulations which have been approved as part of the State Implementation Plan as of the dates referenced in paragraph (b)(1) of this section.

(3) Copies of the materials incorporated by reference may be inspected at the Region 4 EPA Office at 61 Forsyth Street SW., Atlanta, GA 30303. To obtain the material, please call (404) 562–9022. You may inspect the material with an EPA approval date prior to January 1, 2017, for Georgia at the National Archives and Records Administration. For information on the availability of this material at NARA go to: *http://www.archives.gov/federal-register/cfr/ibr-locations.html.*

(c) *EPA approved Georgia regulations.*

EPA-APPROVED GEORGIA REGULATIONS

State citation	Title/subject	State effective date	EPA approval date	Explanation
391–3–1–.01	Definitions	8/14/2016	1/5/2017, 82 FR 1206	
Provisions				
391–3–1–.02:				
391–3–1–.02(1)	General Requirements.	3/20/1979	9/18/1979, 44 FR 54047	
Emission Standards				
391–3–1–.02(2):				
391–3–1–.02(2)(a)	General Provisions	8/1/2013	7/28/2017, 82 FR 35106	Except for paragraph 391–3–1–.02(2)(a)1 (as approved on 3/16/2006).
391–3–1–.02(2)(b)	Visible Emissions	1/17/1979	9/18/1979, 44 FR 54047.	
391–3–1–.02(2)(c)	Incinerators	8/9/2012	4/9/2013, 78 FR 21065.	
391–3–1–.02(2)(d)	Fuel-burning Equipment.	7/20/2005	2/9/2009, 75 FR 6309.	
391–3–1–.02(2)(e)	Particulate Emission from Manufacturing Processes.	8/1/2013	7/28/2017, 82 FR 35106	
391–3–1–.02(2)(f)	Normal Superphosphate Manufacturing Facilities.	1/17/1979	9/18/1979, 44 FR 54047.	
391–3–1–.02(2)(g)	Sulfur Dioxide	7/17/2002	7/9/2003, 68 FR 40786.	

EPA-APPROVED GEORGIA REGULATIONS—Continued

State citation	Title/subject	State effective date	EPA approval date	Explanation
391–3–1–.02(2)(h) ...	Portland Cement Plants.	1/17/1979	9/18/1979, 44 FR 54047.	
391–3–1–.02(2)(i)	Nitric Acid Plants	1/17/1979	9/18/1979, 44 FR 54047.	
391–3–1–.02(2)(j)	Sulfuric Acid Plants	1/17/1979	9/18/1979, 44 FR 54047.	
391–3–1–.02(2)(k)	Particulate Emission from Asphaltic Concrete Hot Mix Plants.	1/17/1979	9/18/1979, 44 FR 54047.	
391–3–1–.02(2)(n) ...	Fugitive Dust	1/17/1979	9/18/1979, 44 FR 54047.	
391–3–1–.02(2)(p) ...	Particulate Emissions from Kaolin and Fuller's. Earth Processes	8/1/2013	7/28/2017, 82 FR 35106	
391–3–1–.02(2)(q) ...	Particulate Emissions from Cotton Gins.	8/1/2013	7/28/2017, 82 FR 35106	
391–3–1–.02(2)(r)	Particulate Emissions from Granular and Mixed Fertilizer Manufacturing Units.	1/27/1972	5/31/1972, 37 FR 10842.	
391–3–1–.02(2)(t)	VOC Emissions from Automobile and Light Duty Truck Manufacturing.	3/7/2012	9/28/2012, 77 FR 59554.	
391–3–1–.02(2)(u) ...	VOC Emissions from Can Coating.	9/16/1992	9/28/2012, 77 FR 59554.	
391–3–1–.02(2)(v)	VOC Emissions from Coil Coating..	9/16/1992	9/28/2012, 77 FR 59554.	
391–3–1–.02(2)(w) ...	VOC Emissions from Paper Coating.	3/7/2012	9/28/2012, 77 FR 59554.	
391–3–1–.02(2)(x)	VOC Emissions from Fabric and Vinyl Coating.	9/16/1992	9/28/2012, 77 FR 59554.	
391–3–1–.02(2)(y)	VOC Emissions from Metal Furniture Coating.	3/7/2012	9/28/2012, 77 FR 59554.	
391–3–1–.02(2)(z)	VOC Emissions from Large Appliance Surface Coating..	3/7/2012	9/28/2012, 77 FR 59554.	
391–3–1–.02(2)(aa)	VOC Emissions from Wire Coating.	9/16/1992	9/28/2012, 77 FR 59554.	
391–3–1–.02(2)(bb)	Petroleum Liquid Storage.	1/9/1991	10/13/1992, 57 FR 46780.	
391–3–1–.02(2)(cc) ..	Bulk Gasoline Terminals.	1/9/1991	10/13/1992, 57 FR 46780.	
391–3–1–.02(2)(dd)	Cutback Asphalt	1/17/1979	9/18/1979, 44 FR 54047.	
391–3–1–.02(2)(ee)	Petroleum Refinery	1/9/1991	10/13/1992, 57 FR 46780.	
391–3–1–.02(2)(ff) ...	Solvent Metal Cleaning.	5/29/1996	4/26/1999, 64 FR 20186.	
391–3–1–.02(2)(gg)	Kraft Pulp Mills	8/1/2013	7/28/2017, 82 FR 35106	
391–3–1–.02(2)(hh)	Petroleum Refinery Equipment Leaks.	6/24/1994	2/2/1996, 61 FR 3817.	

EPA-APPROVED GEORGIA REGULATIONS—Continued

State citation	Title/subject	State effective date	EPA approval date	Explanation
391–3–1–.02(2)(ii)	VOC Emissions from Surface Coating of Miscellaneous Metal Parts and Products.	3/7/2012	9/28/2012, 77 FR 59554.	
391–3–1–.02(2)(jj)	VOC Emissions from Surface Coating of Flat Wood Paneling.	3/7/2012	9/28/2012, 77 FR 59554.	
391–3–1–.02(2)(kk) ..	VOC Emissions from Synthesized Pharmaceutical Manufacturing.	12/18/1980	11/24/1981, 46 FR 57486.	
391–3–1–.02(2)(ll)	VOC Emissions from the Manufacture of Pneumatic Rubber Tires.	12/18/1980	11/24/1981, 46 FR 57486.	
391–3–1–.02(2)(mm)	VOC Emissions from Graphic Arts Systems.	3/7/2012	9/28/2012, 77 FR 59554.	
391–3–1–.02(2)(nn)	VOC Emissions from External Floating Roof Tanks.	12/18/1980	11/24/1981, 46 FR 57486.	
391–3–1–.02(2)(oo)	Fiberglass Insulation Manufacturing Plants.	12/18/1980	11/24/1981, 46 FR 57486.	
391–3–1–.02(2)(pp)	Bulk Gasoline Plants	6/8/2008	9/28/2012, 77 FR 59554.	
391–3–1–.02(2)(qq)	VOC Emissions from Large Petroleum Dry Cleaners.	4/3/1991	10/13/1992, 57 FR 46780.	
391–3–1–.02(2)(rr) ...	Gasoline Dispensing Facilities—Stage I.	6/8/2008	9/28/2012, 77 FR 59554.	
391–3–1–.02(2)(ss) ..	Gasoline Transport Systems and Vapor Collection Systems.	10/6/2010	7/28/2017, 82 FR 35106	
391–3–1–.02(2)(tt) ...	VOC Emissions from Major Sources.	6/8/2008	9/28/2012, 77 FR 59554.	
391–3–1–.02(2)(uu)	Visibility Protection	10/31/1985	1/28/1986, 51 FR 3466.	
391–3–1–.02(2)(vv) ..	Volatile Organic Liquid Handling and Storage.	4/12/2009	9/28/2012, 77 FR 59554.	
391–3–1–.02(2)(yy) ..	Emissions of Nitrogen Oxides from Major Sources.	4/12/2009	9/28/2012, 77 FR 59554.	
391–3–1–.02(2)(ccc).	VOC Emissions from Bulk Mixing Tanks.	4/12/2009	9/28/2012, 77 FR 59554.	
391–3–1–.02(2)(ddd)	VOC Emissions from Offset Lithography and Letterpress.	3/7/2012	9/28/2012, 77 FR 59554.	

EPA-APPROVED GEORGIA REGULATIONS—Continued

State citation	Title/subject	State effective date	EPA approval date	Explanation
391–3–1–.02(2)(eee)	VOC Emissions from expanded Polystyrene Products Manufacturing.	4/12/2009	9/28/2012, 77 FR 59554.	
391–3–1–.02(2)(fff) ..	Particulate Matter Emissions from Yarn Spinning Operations.	6/15/1998	12/2/1999, 64 FR 67491.	
391–3–1–.02(2)(hhh)	Wood Furniture Finishing and Cleaning Operations.	4/12/2009	9/28/2012, 77 FR 59554.	
391–3–1–.02(2)(jjj) ...	NO_X Emissions from Electric Utility Steam Generating Units.	3/12/2007	11/27/2009, 74 FR 62249.	
391–3–1–.02(2)(kkk)	VOC Emissions from Aerospace Manufacturing and Rework Facilities.	4/12/2009	9/28/2012, 77 FR 59554.	
391–3–1–.02(2)(lll) ...	NO_X Emissions from Fuel-burning Equipment.	4/12/2009	9/28/2012, 77 FR 59554.	
391–3–1–.02(2)(mmm).	NO_X Emissions from Stationary Gas Turbines and Stationary Engines used to Generate Electricity.	5/4/2014	9/1/2015, 80 FR 52627.	
391–3–1–.02(2)(nnn)	NO_X Emissions from Large Stationary Gas Turbines.	2/16/2000	7/10/2001, 66 FR 35906.	
391–3–1–.02(2)(ooo)	Heavy-Duty Diesel Engine Requirements.	12/28/2001	7/11/2002, 67 FR 45909.	
391–3–1–.02(2)(rrr) ..	NO_X Emissions from Small Fuel-Burning Equipment.	4/12/2009	9/28/2012, 77 FR 59554.	
391–3–1–.02(2)(vvv)	VOC Emissions from Coating Miscellaneous Plastic Parts and Products.	3/7/2012	9/28/2012, 77 FR 59554.	
391–3–1–.02(2)(yyy)	VOC Emissions from the use of Miscellaneous Industrial Adhesives.	3/7/2012	9/28/2012, 77 FR 59554.	
391–3–1–.02(2)(zzz)	VOC Emissions from Fiberglass Boat Manufacturing.	3/7/2012	9/28/2012, 77 FR 59554.	
391–3–1–.02(2)(aaaa).	Industrial Cleaning Solvents.	3/7/2012	9/28/2012, 77 FR 59554.	
391–3–1–.02(3)	Sampling	6/15/1998	12/2/1999, 64 FR 67491.	
391–3–1–.02(4)	Ambient Air Standards.	10/14/2014	7/31/2015, 80 FR 45609.	
391–3–1–.02(5)	Open Burning	7/13/2006	2/9/2009, 75 FR 6309.	
391–3–1–.02(6)	Source Monitoring ..	8/1/2013	7/28/2017, 82 FR 35106	

EPA-APPROVED GEORGIA REGULATIONS—Continued

State citation	Title/subject	State effective date	EPA approval date	Explanation
391–3–1–.02(7)	Prevention of Significant Deterioration of Air Quality (PSD).	10/14/2014	10/16/2017, 82 FR 47993	EPA is not incorporating the revision to Georgia Rule 391–3–1–.02(7)(a)(2)(iv) included in Georgia's November 12, 2014 SIP submittal because that provision is not in the SIP. *See* March 4, 2016 publication. The version of Georgia Rule 391–3–1–.02(7) in the SIP does not incorporate by reference: (1) The provisions amended in the Ethanol Rule to exclude facilities that produce ethanol through a natural fermentation process from the definition of ''chemical process plants'' in the major NSR source permitting program found at 40 CFR 52.21(b)(1)(i)(a) and (b)(1)(iii)(t), or (2) the provisions at 40 CFR 52.21(b)(2)(v) and (b)(3)(iii)(*c*) that were stayed indefinitely by the Fugitive Emissions Interim Rule, see March 30, 2011 publication.

EPA-APPROVED GEORGIA REGULATIONS—Continued

State citation	Title/subject	State effective date	EPA approval date	Explanation
				On September 9, 2011 Georgia's PSD Rule 391–3–1–.02(7) incorporates by reference the regulations found at 40 CFR 52.21 as of June 3, 2010, with changes. This EPA action is approving the incorporation by reference with the exception of the following provisions: (1) The provisions amended in the Ethanol Rule which exclude facilities that produce ethanol through a natural fermentation process from the definition of ''chemical process plants'' in the major NSR source permitting program found at 40 CFR 52.21(b)(1)(i)(*a*) and (b)(1)(iii)(*t*); and (2) the administrative regulations amended in the Fugitive Emissions Rule. Additionally, this EPA action is not approving the ''automatic rescission clause'' provision at 391–3–1.02(7)(a)2.(iv). This rule contains NO_X as a precursor to ozone for PSD and NSR.
391–3–1–.02(11)	Compliance Assurance Monitoring.	6/15/1998	12/2/1999, 64 FR 67491.	
391–3–1–.02(12)	Cross State Air Pollution Rule NO_X Annual Trading Program.	7/20/2017	10/13/2017, 82 FR 47930	
391–3–1–.02(13)	Cross State Air Pollution Rule SO_2 Annual Trading Program.	7/20/2017	10/13/2017, 82 FR 47930	

EPA-APPROVED GEORGIA REGULATIONS—Continued

State citation	Title/subject	State effective date	EPA approval date	Explanation
391–3–1–.02(14)	Cross State Air Pollution Rule NO_X Ozone Season Trading Program.	7/20/2017	10/13/2017, 82 FR 47930	
391–3–1–.03	Permits	8/1/2013	10/16/2017, 82 FR 47993	Changes specifically to (8)—Permit Requirements at (d) (state effective August 1, 2013) and (g) (state effective September 13, 2011).
391–3–1–.04	Air Pollution Episodes.	11/20/1975	8/20/1976, 41 FR 35184.	
391–3–1–.07	Inspections and Investigations.	11/20/1975	8/20/1976, 41 FR 35184.	
391–3–1–.08	Confidentiality of information.	11/20/1975	8/20/1976, 41 FR 35184.	
391–3–1–.09	Enforcement	11/22/1992	2/2/1996, 61 FR 3819.	
391–3–1–.10	Continuance of Prior Rules.	11/22/1992	2/2/1996, 61 FR 3819.	
391–3–1–.15	Georgia Transportation Conformity and Consultation Interagency Rule.	10/6/2010	6/15/2012, 77 FR 35866..	
391–3–20	Enhanced Inspection and Maintenance.	12/28/2008	4/17/2009, 74 FR 17783.	

(d) *EPA-Approved State Source specific requirements.*

EPA-APPROVED GEORGIA SOURCE-SPECIFIC REQUIREMENTS

Name of source	Permit No.	State effective date	EPA approval date	Comments
Georgia Power Plant Bowen	EPD–AQC–180	11/17/1980	8/17/1981, 46 FR 41498	
Georgia Power Plant Harllee Branch.	4911–117–6716–0	4/23/1980	5/5/1981, 46 FR 25092	
ITT Rayonier, Inc.	2631–151–7686–C	11/4/1980	8/14/1981, 46 FR 41050	
Georgia Power Plant Bowen	EPD–AQC–163	5/16/1979	1/3/1980, 45 FR 781	
Union Camp	2631–025–7379–0	12/18/1981	4/13/1982, 47 FR 15794	
Blue Bird Body Company	3713–111–8601	1/27/1984	1/7/1985, 50 FR 765	
Plant McDonough	4911–033–5037–0 conditions 10 through 22	12/27/1995	3/18/1999, 64 FR 13348	
Plant Yates	4911–038–4838–0 conditions 19 through 32	12/27/1995	3/18/1999, 64 FR 13348	
Plant Yates	4911–038–4839–0 conditions 16 through 29	12/27/1995	3/18/1999, 64 FR 13348	
Plant Yates	4911–038–4840–0 conditions 16 through 29	12/27/1995	3/18/1999, 64 FR 13348	
Plant Yates	4911–038–4841–0 conditions 16 through 29	12/27/1995	3/18/1999, 64 FR 13348	
Plant Atkinson	4911–033–1321–0 conditions 8 through 13	11/15/1994	3/18/1999, 64 FR 13348	
Plant Atkinson	4911–033–1322–0 conditions 8 through 13	11/15/1994	3/18/1999, 64 FR 13348	
Plant Atkinson	4911–033–6949 conditions 5 through 10	11/15/1994	3/18/1999, 64 FR 13348	
Plant Atkinson	4911–033–1320–0 conditions 8 through 13	11/15/1994	3/18/1999, 64 FR 13348	
Plant Atkinson	4911–033–1319–0 conditions 8 through 13	11/15/1994	3/18/1999, 64 FR 13348	
Plant McDonough	4911–033–6951 conditions 5 through 10	11/15/1994	3/18/1999, 64 FR 13348	
Atlanta Gas Light Company	4922–028–10902 conditions 20 and 21	11/15/1994	3/18/1999, 64 FR 13348	
Atlanta Gas Light Company	4922–031–10912 conditions 27 and 28	11/15/1994	3/18/1999, 64 FR 13348	
Austell Box Board Corporation.	2631–033–11436 conditions 1 through 5	11/15/1994	3/18/1999, 64 FR 13348	
Emory University	8922–044–10094 conditions 19 through 26	11/15/1994	3/18/1999, 64 FR 13348	
General Motors Corporation	3711–044–11453 conditions 1 through 6 and Attachment A.	11/15/1994	3/18/1999, 64 FR 13348	
Georgia Proteins Company	2077–058–11226 conditions 16 through 23 and Attachment A.	11/15/1994	3/18/1999, 64 FR 13348	
Owens-Brockway Glass Container, Inc.	3221–060–10576 conditions 26 through 28 and Attachment A.	11/15/1994	3/18/1999, 64 FR 13348	

EPA-APPROVED GEORGIA SOURCE-SPECIFIC REQUIREMENTS—Continued

Name of source	Permit No.	State effective date	EPA approval date	Comments
Owens-Corning Fiberglass Corporation.	3296–060–10079 conditions 25 through 29	11/15/1994	3/18/1999, 64 FR 13348	

(e) *EPA-Approved Georgia non-regulatory provisions.*

EPA-APPROVED GEORGIA NON-REGULATORY PROVISIONS

Name of nonregulatory SIP provision	Applicable geographic or nonattainment area	State submittal date/effective date	EPA approval date	Explanation
High Occupancy Vehicle (HOV) lane on I–85 from Chamblee-Tucker Road to State Road 316. High Occupancy Toll (HOT) lane on I–85 from Chamblee-Tucker Road to State Road 316.	Atlanta Metropolitan Area ..	11/15/1993 and amended on 6/17/1996 and 2/5/2010	3/18/1999, 4/26/1999 and 11/5/2009.	
Clean Fuel Vehicles Revolving Loan Program.	Atlanta Metropolitan Area ..	6/17/1996	4/26/1999.	
Regional Commute Options Program and HOV Marketing Program.	Atlanta Metropolitan Area ..	6/17/1996	4/26/1999.	
HOV lanes on I–75 and I–85	Atlanta Metropolitan Area ..	6/17/1996	4/26/1999.	
Two Park and Ride Lots: Rockdale County-Sigman at I–20 and Douglas County-Chapel Hill at I–20.	Atlanta Metropolitan Area ..	6/17/1996	4/26/1999.	
MARTA Express Bus routes (15 buses).	Atlanta Metropolitan Area ..	6/17/1996	4/26/1999.	
Signal preemption for MARTA routes #15 and #23.	Atlanta Metropolitan Area ..	6/17/1996	4/26/1999.	
Improve and expand service on MARTA's existing routes in southeast DeKalb County.	Atlanta Metropolitan Area ..	6/17/1996	4/26/1999.	
Acquisition of clean fuel buses for MARTA and Cobb County Transit.	Atlanta Metropolitan Area ..	6/17/1996	4/26/1999.	
ATMS/Incident Management Program on I–75/I–85 inside I–285 and northern ARC of I–285 between I–75 and I–85.	Atlanta Metropolitan Area ..	6/17/1996	4/26/1999.	
Upgrading, coordination and computerizing intersections.	Atlanta Metropolitan Area ..	6/17/1996	4/26/1999.	
[Reserved]				
Atlantic Steel Transportation Control Measure.	Atlanta Metropolitan Area ..	3/29/2000	8/28/2000.	
Procedures for Testing and Monitoring Sources of Air Pollutants.	Atlanta Metropolitan Area ..	7/31/2000	7/10/2001.	
Enhanced Inspection/Maintenance Test Equipment, Procedures and Specifications.	Atlanta Metropolitan Area ..	9/20/2000	7/10/2001.	
Preemption Waiver Request for Low-RVP, Low-Sulfur Gasoline Under Air Quality Control Rule 391–3–1–.02(2)(bbb).	Atlanta Metropolitan Area ..	5/31/2000	2/22/2002.	
Technical Amendment to the Georgia Fuel Waiver Request of May 31, 2000.	Atlanta Metropolitan Area ..	11/9/2001	2/22/2002.	

EPA-APPROVED GEORGIA NON-REGULATORY PROVISIONS—Continued

Name of nonregulatory SIP provision	Applicable geographic or nonattainment area	State submittal date/effective date	EPA approval date	Explanation
Georgia's State Implementation Plan for the Atlanta Ozone Nonattainment Area.	Atlanta Metropolitan Area ..	7/17/2001	5/7/2002.	
Post-1999 Rate of Progress Plan.	Atlanta Metropolitan Area ..	12/24/2003	7/19/2004, 69 FR 42884.	
Severe Area Vehicle Miles Traveled (VMT SIP) for the Atlanta 1-hour severe ozone nonattainment area.	Atlanta 1-hour ozone severe nonattainment area.	6/30/2004	6/14/2005, 70 FR 34358.	
Atlanta 1-hour ozone attainment area 2015 maintenance plan.	Atlanta severe 1-hour ozone maintenance area.	2/1/2005	6/14/2005, 70 FR 34660.	
Attainment Demonstration for the Chattanooga Early Action Area.	Walker and Catoosa Counties.	12/31/2004	8/26/2005, 70 FR 50199.	
Attainment Demonstration for the Lower Savannah-Augusta Early Action Compact Area.	Columbia and Richmond Counties.	12/31/04	8/26/05, 70 FR 50195.	
Alternative Fuel Refueling Station/Park and Ride Transportation Center, Project DO–AR–211 is removed.	Douglas County, GA	9/19/2006	11/28/2006, 71 FR 68743.	
Macon 8-hour Ozone Maintenance Plan.	Macon, GA encompassing a portion of Monroe County.	6/15/2007	9/19/2007, 72 FR 53432.	
Murray County 8-hour Ozone Maintenance Plan.	Murray County	6/15/2007	10/16/2007, 72 FR 58538.	
Atlanta Early Progress Plan	Barrow, Bartow, Carroll, Cherokee, Clayton, Cobb, Coweta, DeKalb, Douglas, Fayette, Forsyth, Fulton, Gwinnett, Hall, Henry, Newton, Paulding, Rockdale, Spalding and Walton counties.	1/12/2007	2/20/2008, 73 FR 9206.	
Rome; 1997 Fine Particulate Matter 2002 Base Year Emissions Inventory.	Floyd County	10/27/2009	1/12/12, 77 FR 1873.	
Chattanooga; Fine Particulate Matter 2002 Base Year Emissions Inventory.	Catoosa and Walker Counties.	10/27/09	2/8/12; 77 FR 6467.	
110(a)(1) and (2) Infrastructure Requirements for the 1997 8-Hour Ozone National Ambient Air Quality Standards.	Georgia	10/13/2007	2/6/2012, 77 FR 5706.	
Atlanta 1997 Fine Particulate Matter 2002 Base Year Emissions Inventory.	Barrow, Bartow, Carroll, Cherokee, Clayton, Cobb, Coweta, DeKalb, Douglas, Fayette, Forsyth, Fulton, Gwinnett, Hall, Henry, Newton, Paulding, Rockdale, Spalding and Walton Counties in their entireties and portions of Heard and Putnam Counties.	7/6/2010	3/1/2012, 77 FR 12487.	
Macon 1997 Fine Particulate Matter 2002 Base Year Emissions Inventory.	Bibb County and Monroe County.	8/17/2009	3/2/2012, 77 FR 12724.	

EPA-APPROVED GEORGIA NON-REGULATORY PROVISIONS—Continued

Name of nonregulatory SIP provision	Applicable geographic or nonattainment area	State submittal date/effective date	EPA approval date	Explanation
Atlanta 1997 8-Hour Ozone 2002 Base-Year Emissions Inventory.	Barrow, Bartow, Carroll, Cherokee, Clayton, Cobb, Coweta, DeKalb, Douglas, Fayette, Forsyth, Fulton, Gwinnett, Hall, Henry, Newton, Paulding, Rockdale, Spalding and Walton Counties in their entireties.	10/21/2009	4/24/2012, 77 FR 24399.	
Regional Haze Plan	Statewide	2/11/10	6/28/12, 77 FR 38501.	
Regional Haze Plan Supplement (including BART and Reasonable Progress emissions limits).	Statewide	11/19/10	6/28/12, 77 FR 38501.	
110(a)(1) and (2) Infrastructure Requirements for 1997 Fine Particulate Matter National Ambient Air Quality Standards.	Georgia	7/23/2008	10/25/2012, 77 FR 65125	With the exception of 110(a)(2)(D)(i).
110(a)(1) and (2) Infrastructure Requirements for 2006 Fine Particulate Matter National Ambient Air Quality Standards.	Georgia	10/21/2009	10/25/2012, 77 FR 65125	With the exception of 110(a)(2)(D)(i).
Negative Declaration for Control of VOC Emissions from Reactor Processes and Distillation Operations in Synthetic Organic Chemical Manufacturing Industry (SOCMI) EPA–450/4–91–031, August 1993.	Atlanta 1997 8-Hour Ozone Nonattainment Area.	10/21/2009	9/28/2013.	
Negative Declaration for Control of VOC Emissions from Equipment Leaks from Natural Gas/Gasoline Processing Plants EPA–450/3–83–007, December 1983.	Atlanta 1997 8-Hour Ozone Nonattainment Area.	10/21/2009	9/28/2013.	
Negative Declaration for Control of VOC Leaks from Synthetic Organic Chemical Polymer and Resin Manufacturing Equipment EPA–450/3–83–006, March 1984.	Atlanta 1997 8-Hour Ozone Nonattainment Area.	10/21/2009	9/28/2013.	
Negative Declaration for Control of VOC Emissions from Air Oxidation Processes in Synthetic Organic Chemical Manufacturing Industry (SOCMI), EPA–450/3–84–015, December 1984.	Atlanta 1997 8-Hour Ozone Nonattainment Area.	10/21/2009	9/28/2013.	
110(a)(1) and (2) Infrastructure Requirements for 1997 Fine Particulate Matter National Ambient Air Quality Standards.	Georgia	7/23/2008	4/12/2013	Addressing element 110(a)(2)(D)(i)(II) prong 3 only.
110(a)(1) and (2) Infrastructure Requirements for 2006 Fine Particulate Matter National Ambient Air Quality Standards.	110(a)(1) and (2) Infrastructure Requirements for 1997 Fine Particulate Matter National Ambient Air Quality Standards.	10/21/2009	4/12/2013	Addressing element 110(a)(2)(D)(i)(II) prong 3 only.
1997 8-Hour Ozone Reasonable Further Progress Plan for the Atlanta Area.	Atlanta 1997 8-Hour Ozone Nonattainment Area.	10/21/2009	11/4/2013.	

EPA-APPROVED GEORGIA NON-REGULATORY PROVISIONS—Continued

Name of nonregulatory SIP provision	Applicable geographic or nonattainment area	State submittal date/effective date	EPA approval date	Explanation
1997 8-hour ozone *Maintenance Plan for the Atlanta Area.*	Atlanta 1997 8-Hour Ozone Nonattainment Area.	4/4/2012	12/2/2013	
110(a)(1) and (2) Infrastructure Requirements for 1997 Fine Particulate Matter National Ambient Air Quality Standards.	Georgia	7/23/2008	5/7/2014, 79 FR 26143	Addressing prong 4 of section 110(a)(2)(D)(i) only.
110(a)(1) and (2) Infrastructure Requirements for 2006 Fine Particulate Matter National Ambient Air Quality Standards.	Georgia	10/21/2009	5/7/2014, 79 FR 26143	Addressing prong 4 of section 110(a)(2)(D)(i) only.
1997 Annual $PM_{2.5}$ Maintenance Plan for the Macon Area.	Bibb County and a portion of Monroe County, Macon, Georgia Nonattainment Area.	6/21/12	5/13/14, 79 FR 27193	
1997 Annual $PM_{2.5}$ Maintenance Plan for the Rome Area.	Floyd County, Rome, Georgia Area.	6/21/12	5/14/2014, 79 FR 27496	
1997 Annual $PM_{2.5}$ *Maintenance Plan for the* Georgia portion of the Chattanooga TN-GA-AL Area.	Catoosa and Walker Counties.	9/14/2012	12/19/2014, 79 FR 75748	
110(a)(1) and (2) Infrastructure Requirements for the 2008 Lead NAAQS.	Georgia	5/14/2012	3/18/2015, 80 FR 14019	Addressing the PSD permitting requirements of sections 110(a)(2)(C), 110(a)(2)(D)(i)(II) (prong 3) and 110(a)(2)(J) only.
110(a)(1) and (2) Infrastructure Requirements for the 2008 Ozone NAAQS.	Georgia	3/6/2012	3/18/2015, 80 FR 14019	Addressing the PSD permitting requirements of sections 110(a)(2)(C), 110(a)(2)(D)(i)(II) (prong 3) and 110(a)(2)(J) only.
110(a)(1) and (2) Infrastructure Requirements for the 2010 NO_2 NAAQS.	Georgia	3/25/2013	3/18/2015, 80 FR 14019	Addressing the PSD permitting requirements of sections 110(a)(2)(C), 110(a)(2)(D)(i)(II) (prong 3) and 110(a)(2)(J) only.
Offset measures associated with the repeal of Georgia Rules 391–3–1–.02(2)(aaa) and 391–3–1–.02(2)(bbb) and the revision to Georgia Rule 391–3–1–.02(2)(mmm).	Banks, Barrow, Bartow, Butts, Carroll, Chattooga, Cherokee, Clarke, Clayton, Cobb, Coweta, Dawson, DeKalb, Douglas, Fayette, Floyd, Forsyth, Fulton, Gordon, Gwinnett, Hall, Haralson, Heard, Henry, Jackson, Jasper, Jones, Lamar, Lumpkin, Madison, Meriwether, Monroe, Morgan, Newton, Oconee, Paulding, Pickens, Pike, Polk, Putnam, Rockdale, Spalding, Troup, Walton and Upson.	5/4/2014	9/1/2015, 80 FR 52627	Includes the contingency offset measure in the event that the locomotive conversion program cannot be fully completed.

EPA-APPROVED GEORGIA NON-REGULATORY PROVISIONS—Continued

Name of nonregulatory SIP provision	Applicable geographic or nonattainment area	State submittal date/effective date	EPA approval date	Explanation
Atlanta 2008 8-hour Ozone Marginal Area Requirements.	Bartow, Cherokee, Clayton, Cobb, Coweta, DeKalb, Douglas, Fayette, Forsyth, Fulton, Gwinnett, Henry, Newton, Paulding, and Rockdale Counties.	2/6/2015	8/11/2015, 80 FR 48041	
110(a)(1) and (2) Infrastructure Requirements for the 2008 Lead National Ambient Air Quality Standards.	Georgia	3/6/2012	10/5/2015	With the exception of provisions pertaining to PSD permitting requirements in sections 110(a)(2)(C), 110(a)(2)(D)(i)(II) (prong 3) and 110(a)(2)(J) only.
110(a)(1) and (2) Infrastructure Requirements for the 2008 8-Hour Ozone National Ambient Air Quality Standards.	Georgia	5/14/2012	10/9/2015, 80 FR 61109	With the exception of sections: 110(a)(2)(C), (D)(i)(II) prong 3 and (J) concerning PSD permitting requirements and 110(a)(2)(D)(i)(I) and (II) (prongs 1, 2, and 4) concerning interstate transport requirements.
1997 Annual $PM_{2.5}$ Maintenance Plan for the Atlanta Area.	Barrow, Bartow, Carroll, Cherokee, Clayton, Cobb, Coweta, DeKalb, Douglas, Fayette, Forsyth, Fulton, Gwinnett, Hall, Henry, Newton, Paulding, Rockdale, Spalding and Walton Counties in their entireties and portions of Heard and Putnam Counties.	8/30/2012	2/24/2016, 81 FR 9114	
110(a)(1) and (2) Infrastructure Requirements for the 2010 1-hour SO_2 National Ambient Air Quality Standard.	Georgia	10/22/2013	4/28/2016, 81 FR 25355	With the exception of interstate transport requirements of section 110(a)(2)(D)(i)(I) and (II) (prongs 1, 2, and 4).
110(a)(1) and (2) Infrastructure Requirements for the 2010 1-hour NO_2 NAASQ.	Georgia	3/25/2013	9/14/2016	With the exception of sections 110(a)(2)(C), prong 3 of D(i), and (J) and sections 110(a)(2)(D)(i)(I) and (II) (prongs 1, 2, and 4).
110(a)(1) and (2) Infrastructure Requirements for the 2012 Annual $PM_{2.5}$ NAAQS.	Georgia	12/14/2015	11/21/2016, 81 FR 83154	With the exception of sections 110(a)(2)(D)(i)(I) and (II) (prongs 1, 2 and 4).
2008 8-hour ozone NAAQS Nonattainment New Source Review Requirements for the Atlanta Area.	Bartow, Cherokee, Clayton, Cobb, Coweta, DeKalb, Douglas, Fayette, Forsyth, Fulton, Gwinnett, Henry, Newton, Paulding, and Rockdale Counties.	2/6/2015	3/22/2017, 82 FR 14611	

EPA-APPROVED GEORGIA NON-REGULATORY PROVISIONS—Continued

Name of nonregulatory SIP provision	Applicable geographic or nonattainment area	State submittal date/effective date	EPA approval date	Explanation
2008 8-hour ozone Maintenance Plan for the Atlanta Area.	Bartow, Cherokee, Clayton, Cobb, Coweta, DeKalb, Douglas, Fayette, Forsyth, Fulton, Gwinnett, Henry, Newton, Paulding and Rockdale Counties.	7/18/2016	6/2/2017, 82 FR 25523	
January 2014 Regional Haze Progress Report.	Georgia	1/8/2014	10/4/2017, 82 FR 46136	
110(a)(1) and (2) Infrastructure Requirements for the 2010 1-hour NO_2 NAAQS.	Georgia	3/25/2013	5/4/2018, 83 FR 19637	Addressing Prong 4 only.
110(a)(1) and (2) Infrastructure Requirements for the 2010 1-hour SO_2 NAAQS.	Georgia	7/25/2014	5/4/2018, 83 FR 19637	Addressing Prong 4 only.
110(a)(1) and (2) Infrastructure Requirements for the 2012 Annual $PM_{2.5}$ NAAQS.	Georgia	12/14/2015	5/4/2018, 83 FR 19637	Addressing Prong 4 only.
110(a)(1) and (2) Infrastructure Requirements for the 2008 8-hour Ozone NAAQS.	Georgia	5/14/2012	5/4/2018, 83 FR 19637	Addressing Prong 4 only.
Regional Haze Plan Revision.	Georgia	7/26/2017	5/4/2018, 83 FR 19637	

[64 FR 27701, May 21, 1999]

EDITORIAL NOTES: 1. For FEDERAL REGISTER citations affecting § 52.570, see the List of CFR Sections Affected, which appears in the Finding Aids section of the printed volume and at *www.fdsys.gov*.

2. At 78 FR 21069, Apr. 9, 2013, § 52.570 was amended in the paragraph (c) table by revising the entry for ''391–3–1.02(2)(c)''; however, that entry does not exist in the table.

§ 52.571 Classification of regions.

The Georgia plan was evaluated on the basis of the following classifications:

Air quality control region	Pollutant				
	Particulate matter	Sulfur oxides	Nitrogen dioxide	Carbon monoxide	Photochemical oxidants (hydrocarbons)
Augusta (Georgia)-Aiken (South Carolina) Interstate	I	II	III	III	III
Metropolitan Atlanta Intrastate	I	I	III	III	III
Chattanooga Interstate	I	II	III	III	III
Columbus (Georgia)-Phenix City (Alabama) Interstate	I	III	III	III	III
Central Georgia Intrastate	I	I	III	III	III
Jacksonville (Florida)-Brunswick (Georgia) Interstate	I	II	III	III	I
Northeast Georgia Intrastate	II	III	III	III	III
Savannah (Georgia)-Beaufort (South Carolina) Interstate	I	I	III	III	III
Southwest Georgia Intrastate	II	II	III	III	III

[37 FR 10859, May 31, 1972, as amended at 39 FR 16346, May 8, 1974]

§ 52.572 Approval status.

(a) With the exceptions set forth in this subpart, the Administrator approves Georgia's plans for the attainment and maintenance of the national standards under section 110 of the

Clean Air Act. Furthermore, the Administrator finds the plans satisfy all requirements of Part D, Title I, of the Clean Air Act as amended in 1977.

(b) *Disapproval.* Submittal from the State of Georgia, through the Georgia's Department of Natural Resources Environmental Protection Division (EPD) on January 13, 2011, that would allow for the automatic rescission of federal permitting-related requirements in certain circumstances. EPA is disapproving a portion of the SIP submittal related to a provision (at 391–3–1–.02(7)(a)(2)(iv)) that would automatically rescind portions of Georgia's State Implementation Plan in the wake of certain court decisions or other triggering events (the automatic rescission clause).

[76 FR 55577, Sept. 8, 2011, as amended at 81 FR 11445, Mar. 4, 2016]

§ 52.573 Control strategy: General.

The generic rules and procedures for emission trades (bubbles), submitted on October 27, 1982, by the Georgia Department of Natural Resources, are disapproved because they do not meet the requirements of the Clean Air Act.

[49 FR 44464, Nov. 7, 1984]

§§ 52.574–52.575 [Reserved]

§ 52.576 Compliance schedules.

(a) [Reserved]

(b) The extended compliance schedule for the General Motors Lakewood Assembly Plant submitted on July 30, 1982, is disapproved because the State has failed to show that the schedule would not interfere with the attainment of the ozone standard in the Atlanta nonattainment area.

[40 FR 3413, Jan. 22, 1975, as amended at 40 FR 18432, Apr. 28, 1975; 40 FR 42352, Sept. 12, 1975; 51 FR 3778, Jan. 30, 1986; 51 FR 40675, 40676, Nov. 7, 1986; 54 FR 25258, June 14, 1989]

§ 52.577 Determination of attainment.

(a) Based upon EPA's review of the air quality data for the 3-year period 2007–2009, EPA determined that the Chattanooga, Alabama-Georgia-Tennessee $PM_{2.5}$ nonattainment area attained the 1997 annual $PM_{2.5}$ NAAQS by the applicable attainment date of April 5, 2010. Therefore, EPA has met the requirement pursuant to CAA section 179(c) to determine, based on the Area's air quality as of the attainment date, whether the Area attained the standard. EPA also determined that the Chattanooga, Alabama-Georgia-Tennessee $PM_{2.5}$ nonattainment area is not subject to the consequences of failing to attain pursuant to section 179(d).

(b) Based upon EPA's review of the air quality data for the 3-year period 2007–2009, EPA determined that the Macon, Georgia $PM_{2.5}$ nonattainment Area attained the 1997 annual $PM_{2.5}$ NAAQS by the applicable attainment date of April 5, 2010. Therefore, EPA has met the requirement pursuant to CAA section 179(c) to determine, based on the Area's air quality as of the attainment date, whether the Area attained the standard. EPA also determined that the Macon, Georgia $PM_{2.5}$ nonattainment Area is not subject to the consequences of failing to attain pursuant to section 179(d).

(c) Based upon EPA's review of the air quality data for the 3-year period 2007–2009, EPA determined that the Rome, Georgia $PM_{2.5}$ nonattainment area attained the 1997 annual $PM_{2.5}$ NAAQS by the applicable attainment date of April 5, 2010. Therefore, EPA has met the requirement pursuant to CAA section 179(c) to determine, based on the Area's air quality as of the attainment date, whether the Area attained the standard. EPA also determined that the Rome, Georgia $PM_{2.5}$ nonattainment area is not subject to the consequences of failing to attain pursuant to section 179(d).

(d) Based upon EPA's review of the air quality data for the 3-year period 2008–2010, EPA determined that the Atlanta, Georgia, 1997 8-hour ozone nonattainment Area attained the 1997 8-hour ozone NAAQS by the applicable attainment date of June 15, 2011. Therefore, EPA has met the requirement pursuant to CAA section 181(b)(2) to determine, based on the Area's air quality as of the attainment date, whether the Area attained the standard. EPA also determined that the Atlanta, Georgia, 1997 8-hour ozone nonattainment Area is not subject to the

consequences of failing to attain pursuant to section 181(b)(2).

[76 FR 55575, Sept. 8, 2011, as amended at 76 FR 55577, Sept. 8, 2011; 77 FR 13492, Mar. 7, 2012]

§ 52.578 Control Strategy: Sulfur oxides and particulate matter.

In a letter dated March 26, 1987, the Georgia Department of Natural Resources certified that no emission limits in the State's plan are based on dispersion techniques not permitted by EPA's stack height rules. This certification does not apply to Georgia Power plants; Hammond (Coosa), McDonough (Smyrna), Arkwright (Macon), Branch (Milledgeville), Wansley (Roopville), Scherer (Juliette), and Yates (Newnan), Savannah Electric Plants McIntosh (Rincon) and Port Wentworth (Port Wentworth); Inland (Rome); Buckeye Cellulose (Oglethorpe); Georgia Kraft (Macon), Union Camp (Savannah); and Stone Container (Savannah).

(a) Determination of Attaining Data. EPA has determined, as of April 5, 2011, the Rome, Georgia, nonattainment area has attaining data for the 1997 annual $PM_{2.5}$ NAAQS. This determination, in accordance with 40 CFR 52.1004(c), suspends the requirements for this area to submit an attainment demonstration, associated reasonably available control measures, a reasonable further progress plan, contingency measures, and other planning SIPs related to attainment of the standard for as long as this area continues to meet the 1997 annual $PM_{2.5}$ NAAQS.

(b) *Determination of Attaining Data.* EPA has determined, as of May 31, 2011, the Chattanooga, Tennessee, nonattainment area has attaining data for the 1997 annual $PM_{2.5}$ NAAQS. This determination, in accordance with 40 CFR 52.1004(c), suspends the requirements for this area to submit an attainment demonstration, associated reasonably available control measures, a reasonable further progress plan, contingency measures, and other planning SIPs related to attainment of the standard for as long as this area continues to meet the 1997 annual $PM_{2.5}$ NAAQS.

(c) *Determination of Attaining Data.* EPA has determined, as of June 2, 2011, the Macon, Georgia, nonattainment area has attaining data for the 1997 annual $PM_{2.5}$ NAAQS. This determination, in accordance with 40 CFR 52.1004(c), suspends the requirements for this area to submit an attainment demonstration, associated reasonably available control measures, a reasonable further progress plan, contingency measures, and other planning SIPs related to attainment of the standard for as long as this area continues to meet the 1997 annual $PM_{2.5}$ NAAQS.

(d) *Disapproval.* EPA is disapproving portions of Georgia's Infrastructure SIP for the 2006 24-hour $PM_{2.5}$ NAAQS addressing interstate transport, specifically with respect to section 110(a)(2)(D)(i)(I).

(e) *Determination of Attaining Data.* EPA has determined, as of April 5, 2011, the Atlanta, Georgia, nonattainment area has attaining data for the 1997 annual $PM_{2.5}$ NAAQS. This determination, in accordance with 40 CFR 51.1004(c), suspends the requirements for this area to submit an attainment demonstration, associated reasonably available control measures, a reasonable further progress plan, contingency measures, and other planning SIPs related to attainment of the standard for as long as this area continues to meet the 1997 annual $PM_{2.5}$ NAAQS.

[54 FR 40002, Sept. 29, 1989, as amended at 76 FR 18651, Apr. 5, 2011; 76 FR 31241, May 31, 2011; 76 FR 31859, June 2, 2011; 76 FR 43167, July 20, 2011; 76 FR 76622, Dec. 8, 2011]

§ 52.579 Economic feasibility considerations.

Section 88–906(h), (i), (k), (o) and (q) of the Georgia Code is disapproved, since consideration of economic feasibility could, in some cases, conflict, with the requirements of the Act that primary standards be attained as expeditiously as practicable, but in no case later than July 1975.

[39 FR 34536, Sept. 26, 1974]

§ 52.580 [Reserved]

§ 52.581 Significant deterioration of air quality.

(a) All applications and other information required pursuant to § 52.21 of this part from sources located in the State of Georgia shall be submitted to the State agency, Georgia Department

of Natural Resources, Environmental Protection Division, Air Protection Branch, 4244 International Parkway, Suite 120, Atlanta, Georgia 30354 rather than to EPA's Region 4 office.

(b) [Reserved]

[77 FR 23398, Apr. 19, 2012]

§ 52.582 Control strategy: Ozone.

(a) Approval—The Administrator approves the incorporation of the photochemical assessment ambient monitoring system submitted by Georgia on November 8, 1993, into the Georgia State Implementation Plan. This submittal satisfies 40 CFR 58.20(f) which requires the State to provide for the establishment and maintenance of photochemical assessment monitoring stations (PAMS).

(b) On August 29, 1997, Harold F. Reheis, Director, Georgia Department of Natural Resources submitted to John Hankinson, Regional Administrator, United States Environmental Protection Agency Region IV, a State Implementation Plan revision including the following transportation control measures.

(1) *HOV Lane*—This project referred to as AR 073B is the addition of HOV lanes on I–85 from Chamblee-Tucker Road to State Route 316.

(2) *Ridershare Program*—This project is referred to as AR–220 and is a lump sum eligible to all colleges and universities with the 10 county ARC region.

(3) *Transportation Management Associations*—Referred to as project AR 221 is to set up a ''pot'' of funds set aside specially to assist in the development of transportation management associations and start-up ridershare services in the areas that are considered to be highly congested throughout the Region.

(4) *MARTA Transit Incentives Program*—This project is referred to as AR–231.

(5) *Alternative Fuel Refueling Station/Park and Ride Transportation Center*—This project is referred to as DO–AR–211.

(c) EPA is giving final interim approval to the Georgia Inspection and Maintenance (I/M) Program submitted on March 27, 1996, with supplemental information submitted on January 31, 1997, until November 11, 1999.

(d) *Determination of attaining data.* EPA has determined, as of June 23, 2011, the Atlanta, Georgia nonattainment area has attaining data for the 1997 8-hour ozone NAAQS. This determination, in accordance with 40 CFR 51.918, suspends the requirements for this area to submit an attainment demonstration, associated reasonably available control measures, a reasonable further progress plan, contingency measures, and other planning SIPs related to attainment of the standard for as long as this area continues to meet the 1997 8-hour ozone NAAQS.

(e) *Determination of attaining data.* EPA has determined, as of July 14, 2016, that the Atlanta, Georgia nonattainment area has attaining data for the 2008 8-hour ozone NAAQS. This determination, in accordance with 40 CFR 51.1118, suspends the requirements for this area to submit attainment demonstrations and associated reasonably available control measures, reasonable further progress plans, contingency measures for failure to attain or make reasonable progress, and other planning SIPs related to attainment of the 2008 ozone NAAQS, or for any prior NAAQS for which the determination has been made, until such time as: The area is redesignated to attainment for that NAAQS or a redesignation substitute is approved as appropriate, at which time the requirements no longer apply; or EPA determines that the area has violated that NAAQS, at which time the area is again required to submit such plans.

[59 FR 46178, Sept. 7, 1994, as amended at 63 FR 23390, Apr. 29, 1998; 63 FR 34302, June 24, 1998; 64 FR 4570, Jan. 29, 1999; 76 FR 36875, June 23, 2011; 81 FR 45421, July 14, 2016]

§ 52.583 Additional rules and regulations.

Section 391–3–1–.02(2)(e), Particulate Emissions from Manufacturing Processes, is hereby approved only to the extent that it provides for the establishment, as permit conditions, of emission limits more stringent than those otherwise applicable under the

currently approved Georgia regulations. Any application of this regulation which would result in permit provisions less stringent than those otherwise required by the State's regulations must be formally submitted to EPA for prior approval as a plan revision pursuant to section 110(a) of the Clean Air Act.

[41 FR 35185, Aug. 20, 1976]

§ 52.584 Interstate pollutant transport provisions; What are the FIP requirements for decreases in emissions of nitrogen oxides?

(a)(1) The owner and operator of each source and each unit located in the State of Georgia and for which requirements are set forth under the CSAPR NO_X Annual Trading Program in subpart AAAAA of part 97 of this chapter must comply with such requirements. The obligation to comply with such requirements will be eliminated by the promulgation of an approval by the Administrator of a revision to Georgia's State Implementation Plan (SIP) as correcting the SIP's deficiency that is the basis for the CSAPR Federal Implementation Plan under § 52.38(a), except to the extent the Administrator's approval is partial or conditional.

(2) Notwithstanding the provisions of paragraph (a)(1) of this section, if, at the time of the approval of Georgia's SIP revision described in paragraph (a)(1) of this section, the Administrator has already started recording any allocations of CSAPR NO_X Annual allowances under subpart AAAAA of part 97 of this chapter to units in the State for a control period in any year, the provisions of subpart AAAAA of part 97 of this chapter authorizing the Administrator to complete the allocation and recordation of CSAPR NO_X Annual allowances to units in the State for each such control period shall continue to apply, unless provided otherwise by such approval of the State's SIP revision.

(b)(1) The owner and operator of each source and each unit located in the State of Georgia and for which requirements are set forth under the CSAPR NO_X Ozone Season Group 1 Trading Program in subpart BBBBB of part 97 of this chapter must comply with such requirements. The obligation to comply with such requirements will be eliminated by the promulgation of an approval by the Administrator of a revision to Georgia's State Implementation Plan (SIP) as correcting the SIP's deficiency that is the basis for the CSAPR Federal Implementation Plan under § 52.38(b), except to the extent the Administrator's approval is partial or conditional.

(2) Notwithstanding the provisions of paragraph (b)(1) of this section, if, at the time of the approval of Georgia's SIP revision described in paragraph (b)(1) of this section, the Administrator has already started recording any allocations of CSAPR NO_X Ozone Season Group 1 allowances under subpart BBBBB of part 97 of this chapter to units in the State for a control period in any year, the provisions of subpart BBBBB of part 97 of this chapter authorizing the Administrator to complete the allocation and recordation of CSAPR NO_X Ozone Season Group 1 allowances to units in the State for each such control period shall continue to apply, unless provided otherwise by such approval of the State's SIP revision.

[76 FR 48363, Aug. 8, 2011, as amended at 81 FR 74586 and 74594, Oct. 26, 2016]

§ 52.585 Interstate pollutant transport provisions; What are the FIP requirements for decreases in emissions of sulfur dioxide?

(a) The owner and operator of each source and each unit located in the State of Georgia and for which requirements are set forth under the CSAPR SO_2 Group 2 Trading Program in subpart DDDDD of part 97 of this chapter must comply with such requirements. The obligation to comply with such requirements will be eliminated by the promulgation of an approval by the Administrator of a revision to Georgia's State Implementation Plan (SIP) as correcting the SIP's deficiency that is the basis for the CSAPR Federal Implementation Plan under § 52.39, except to the extent the Administrator's approval is partial or conditional.

(b) Notwithstanding the provisions of paragraph (a) of this section, if, at the time of the approval of Georgia's SIP revision described in paragraph (a) of

this section, the Administrator has already started recording any allocations of CSAPR SO_2 Group 2 allowances under subpart DDDDD of part 97 of this chapter to units in the State for a control period in any year, the provisions of subpart DDDDD of part 97 of this chapter authorizing the Administrator to complete the allocation and recordation of CSAPR SO_2 Group 2 allowances to units in the State for each such control period shall continue to apply, unless provided otherwise by such approval of the State's SIP revision.

[76 FR 48363, Aug. 8, 2011, as amended at 81 FR 74586, Oct. 26, 2016]

§ 52.590 Original identification of plan section.

(a) This section identified the original ''Air Implementation Plan for the State of Georgia'' and all revisions submitted by Georgia that were federally approved prior to December 1, 1998. The information in this section is available in the 40 CFR, part 52 edition revised as of July 1, 1999, the 40 CFR, part 52, Volume 1 of 2 (§§ 52.01 to 52.1018) editions revised as of July 1, 2000 through July 1, 2011, and the 40 CFR, part 52, Volume 1 of 3 (§§ 52.01 to 52.1018) editions revised as of July 1, 2012.

(b)–(c) [Reserved]

[79 FR 30050, May 27, 2014]

Subpart M—Hawaii

§ 52.620 Identification of plan.

(a) *Purpose and scope.* This section sets forth the applicable State implementation plan for State of Hawaii under section 110 of the Clean Air Act, 42 U.S.C. 7401–7671q and 40 CFR part 51 to meet national ambient air quality standards.

(b) *Incorporation by reference.* (1) Material listed in paragraph (c) and (d) of this section with an EPA approval date prior to May 1, 2012, was approved for incorporation by reference by the Director of the Federal Register in accordance with 5 U.S.C. 552(a) and 1 CFR part 51. Material is incorporated as it exists on the date of the approval, and notice of any change in the material will be published in the FEDERAL REGISTER. Entries in paragraphs (c) and (d) of this section with EPA approval dates after May 1, 2012, will be incorporated by reference in the next update to the SIP compilation.

(2) EPA Region IX certifies that the rules/regulations provided by EPA in the SIP compilation at the addresses in paragraph (b)(3) of this section are an exact duplicate of the officially promulgated State rules/regulations which have been approved as part of the State implementation plan as of May 1, 2012.

(3) Copies of the materials incorporated by reference may be inspected at the Region IX EPA Office at 75 Hawthorne Street, San Francisco, CA 94105; Air and Radiation Docket and Information Center, EPA Headquarters Library, Infoterra Room (Room Number 3334), EPA West Building, 1301 Constitution Ave. NW., Washington, DC; or the National Archives and Records Administration (NARA). For information on the availability of this material at NARA, call (202) 741–6030, or go to:*http://www.archives.gov/federal-register/cfr/ibr-locations.html.*

(c) EPA approved regulations.

EPA-APPROVED STATE OF HAWAII REGULATIONS

State citation	Title/subject	Effective date	EPA approval date	Explanation
Department of Health, Public Health Regulations, Chapter 43, Air Pollution Control Regulations				
Section 22	Hearings and Appeals	12/26/1972	05/14/1973, 38 FR 12711	See also 74 FR 11037 (March 16, 2009).
Section 23	Application	03/28/1972	05/31/1972, 37 FR 10842	See also 74 FR 11037 (March 16, 2009).
Department of Health, Title 11, Chapter 60, Air Pollution Control Regulations				
11–60–18	Control of open burning	11/29/1982	08/18/1983, 48 FR 37403	
11–60–21	Agricultural burning, ''no burn'' days.	11/29/1982	08/18/1983, 48 FR 37403	
11–60–23	Agricultural burning, action on applications.	11/29/1982	08/18/1983, 48 FR 37403	
11–60–26	Fugitive dust	11/29/1982	08/18/1983, 48 FR 37403	

EPA-APPROVED STATE OF HAWAII REGULATIONS—Continued

State citation	Title/subject	Effective date	EPA approval date	Explanation
11–60–27	Incineration	11/29/1982	08/18/1983, 48 FR 37403	
11–60–28	Bagasse-burning boilers	11/29/1982	08/18/1983, 48 FR 37403	
11–60–29	Process industries	11/29/1982	08/18/1983, 48 FR 37403	
Department of Health, Title 11, Chapter 60.1, Air Pollution Control, Hawaii Administrative Rules				
11–60.1–1	Definitions	11/14/2003	4/27/2012, 77 FR 25084	Supersedes 11–60–1.
11–60.1–2	Prohibition of air pollution	11/14/2003	4/27/2012, 77 FR 25084	Supersedes 11–60–17.
11–60.1–3	General conditions for considering applications.		04/23/2012, 77 FR 24148	Supersedes 11–60–04, 11–60–11, 11–60–13, 11–60–14.
11–60.1–4	Certification	11/14/2003	4/27/2012, 77 FR 25084	New regulation.
11–60.1–5	Permit conditions		04/23/2012, 77 FR 24148	New regulation.
11–60.1–7	Transfer of permit		04/23/2012, 77 FR 24148	Supersedes 11–60–09.
11–60.1–8	Reporting discontinuance	11/14/2003	4/27/2012, 77 FR 25084	Supersedes 11–60–10.
11–60.1–11	Sampling, testing, and reporting methods.	11/14/2003	4/27/2012, 77 FR 25084	Supersedes 11–60–15 and 11–60–6.
11–60.1–12	Air quality models		04/23/2012, 77 FR 24148	New regulation.
11–60.1–14	Public access to information.	11/14/2003	4/27/2012, 77 FR 25084	New regulation.
11–60.1–15	Reporting of equipment shutdown.	11/14/2003	4/27/2012, 77 FR 25084	Supersedes 11–60–16.
11–60.1–16	Prompt reporting of deviations.	11/14/2003	4/27/2012, 77 FR 25084	Supersedes 11–60–16.
11–60.1–17	Prevention of air pollution emergency episodes.	11/14/2003	4/27/2012, 77 FR 25084	Supersedes 11–60–35.
11–60.1–19	Penalties and remedies		04/23/2012, 77 FR 24148	Supersedes 11–60–37.
11–60.1–20	Severability	11/14/2003	4/27/2012, 77 FR 25084	Supersedes 11–60–38.
11–60.1–31	Applicability	11/26/93	8/21/14, 79 FR 49454	Newly added to the Hawaii SIP. Submitted on April 4, 2014.
11–60.1–32	Visible emissions	11/14/2003	4/27/2012, 77 FR 25084	Supersedes 11–60–24.
11–60.1–34	Motor vehicles	11/14/2003	4/27/2012, 77 FR 25084	Supersedes 11–60–25.
11–60.1–40	Volatile organic compound water separation.	11/14/2003	4/27/2012, 77 FR 25084	New regulation.
11–60.1–41	Pump and compressor requirements.	11/14/2003	4/27/2012, 77 FR 25084	New regulation.
11–60.1–42	Waste gas disposal	11/14/2003	4/27/2012, 77 FR 25084	New regulation.
11–60.1–51	Definitions	11/14/2003	4/27/2012, 77 FR 25084	Supersedes 11–60–1.
11–60.1–53	Agricultural burning: Permit requirement.	11/14/2003	4/27/2012, 77 FR 25084	Supersedes 11–60–19.
11–60.1–54	Agricultural burning: Applications.	11/14/2003	4/27/2012, 77 FR 25084	Supersedes 11–60–20.
11–60.1–56	Agricultural burning: Recordkeeping and monitoring.	11/14/2003	4/27/2012, 77 FR 25084	Supersedes 11–60–22.
11–60.1–81	Definitions		04/23/2012, 77 FR 24148	New regulation.
11–60.1–82	Applicability		04/23/2012, 77 FR 24148	Supersedes 11–60–02.
11–60.1–83	Initial covered source permit application.		04/23/2012, 77 FR 24148	Supersedes 11–60–03, 11–60–05, 11–60–07, 11–60–08, 11–60–12.
11–60.1–84	Duty to supplement or correct permit applications.		04/23/2012, 77 FR 24148	New regulation.
11–60.1–90	Permit content	9/15/01	79 FR 19012, 4/7/2014	Newly added to the Hawaii SIP. Submitted on February 13, 2013.
11–60.1–91	Temporary covered source permits.		04/23/2012, 77 FR 24148	New regulation.
11–60.1–92	Covered source general permits.		04/23/2012, 77 FR 24148	New regulation.
11–60.1–93	Federally-enforceable permit terms and conditions.		04/23/2012, 77 FR 24148	New regulation.
11–60.1–99	Public participation		04/23/2012, 77 FR 24148	New regulation.
11–60.1–103	Applications for minor modifications.		04/23/2012, 77 FR 24148	New regulation.
11–60.1–104	Applications for significant modifications.		04/23/2012, 77 FR 24148	New regulation.

(d) EPA approved State source specific requirements.

Name of source	Permit No.	Effective date	EPA approval date	Explanation
None.				

(e) EPA Approved Nonregulatory Provisions and Quasi-Regulatory Measures.

EPA APPROVED HAWAII NONREGULATORY PROVISIONS AND QUASI-REGULATORY MEASURES

Name of SIP provision	Applicable geographic or nonattainment area	State submittal date	EPA approval date	Explanation
State of Hawaii Air Pollution Control Strategy Plan				
Section I—Introduction	State-wide	01/28/72	05/31/72, 37 FR 10842.	
Sections V and VI:				
Section V—Air Quality Data Summary.	State-wide	08/15/73	06/25/74, 39 FR 22946.	
Section VI—Emission Inventory Summary.	State-wide	08/15/73	06/25/74, 39 FR 22946.	
Section VII—Control Strategy Development:				
Subsection 1. Particulate Matter.	State-wide	04/25/74	03/02/76, 41 FR 8956	Excluding subsection entitled, ''Control Strategy to Meet State Standards.'' See State submittals dated May 8, 1972 and May 22, 1972, approved at 37 FR 15080 (July 27, 1972), and 40 CFR 52.623.
PM_{10} Control Measures/NSR Procedures.	State-wide	09/14/88	07/09/04, 69 FR 41431.	
Subsection 2. Sulfur Oxides.	State-wide	01/28/72	05/31/72, 37 FR 10842	Excluding subsection entitled, ''Control Strategy to Meet State Standards.'' See State submittals dated May 8, 1972 and May 22, 1972, approved at 37 FR 15080 (July 27, 1972), and 40 CFR 52.623.
Subsection 3. Carbon Monoxide.	State-wide	01/28/72	05/31/72, 37 FR 10842	Excluding subsection entitled, ''Control Strategy to Meet State Standards.'' See State submittals dated May 8, 1972 and May 22, 1972, approved at 37 FR 15080 (July 27, 1972), and 40 CFR 52.623.
Subsection 4. Nitrogen Dioxide.	State-wide	01/28/72	05/31/72, 37 FR 10842	Excluding subsection entitled, ''Control Strategy to Meet State Standards.'' See State submittals dated May 8, 1972 and May 22, 1972, approved at 37 FR 15080 (July 27, 1972), and 40 CFR 52.623.
Subsection 5. Photochemical Oxidants.	State-wide	01/28/72	05/31/72, 37 FR 10842	Excluding subsection entitled, ''Control Strategy to Meet State Standards.'' See State submittals dated May 8, 1972 and May 22, 1972, approved at 37 FR 15080 (July 27, 1972), and 40 CFR 52.623.

EPA APPROVED HAWAII NONREGULATORY PROVISIONS AND QUASI-REGULATORY MEASURES—Continued

Name of SIP provision	Applicable geographic or nonattainment area	State submittal date	EPA approval date	Explanation
Sections VIII through XI:.				
Section VIII—Prevention of Emergency Episodes.	State-wide	01/28/72	05/31/72, 37 FR 10842	Excluding subsection entitled, ''State Plan.'' See State submittals dated May 8, 1972 and May 22, 1972, approved at 37 FR 15080 (July 27, 1972), and 40 CFR 52.623.
Section IX—Compliance Schedule.	State-wide	01/28/72	05/31/72, 37 FR 10842.	
Section X—Source Surveillance System.	State-wide	01/28/72	05/31/72, 37 FR 10842.	
Section XI—Permit and Registration System.	State-wide	01/28/72	05/31/72, 37 FR 10842.	
Section XII—Air Quality Surveillance Network:				
Section XII—Air Quality Surveillance Network.	State-wide	08/21/80	08/10/81, 46 FR 40512.	
Air Quality Surveillance Network, SIP Amendment—PM_{10}.	State-wide	09/14/88	07/09/04, 69 FR 41431.	
Sections XIII and XIV:				
Section XIII—Intergovernmental Cooperation.	State-wide	01/28/72	05/31/72, 37 FR 10842.	
Section XIV—Resources.	State-wide	01/28/72	05/31/72, 37 FR 10842.	
State of Hawaii Air Pollution Control Implementation Plans for Nitrogen Dioxide, Ozone, $PM_{2.5}$, and Lead				
State of Hawaii Air Pollution Control Implementation Plan for Lead.	Statewide	10/29/82	8/18/83, 48 FR 37402	Excluding section II (''Notice of Public Hearing''); Hawaii Statute on Environmental Quality, Chapter 342, Hawaii Revised Statutes, section 342–7 (see 74 FR 11037 (March 16, 2009); and section IV (''Control Regulations''). The statutory provisions in Section III (''Legal Authority'') superseded statutory provisions approved at 37 FR 10842 (May 31, 1972) and at 38 FR 30876 (November 8, 1973) and were, with few exceptions, superseded by approval of more recent statutory provisions at 77 FR 47530 (August 9, 2012). Statutory provisions that remain in the current applicable SIP are listed separately in the table in paragraph (e).

EPA APPROVED HAWAII NONREGULATORY PROVISIONS AND QUASI-REGULATORY MEASURES—Continued

Name of SIP provision	Applicable geographic or nonattainment area	State submittal date	EPA approval date	Explanation
State Implementation Plan Revision, Clean Air Act Section 110(a)(2), 1997 Ozone National Ambient Air Quality Standard and 1997 and 2006 $PM_{2.5}$ National Ambient Air Quality Standards.	Statewide	12/14/11	8/9/12, 77 FR 47530	Approval excludes appendix A (''Hawaii Revised Statutes, Chapter 84, Standards of Conduct, Chapter 342B, Air Pollution Control''), appendix B, (''Hawaii Administrative Rules, Title 11, Chapter 60.1, Air Pollution Control''), appendix D (''SIP Public Comment Proceedings''), and appendix E (''Public Proceedings for Hawaii Administrative Rules, Chapter 11–60.1''). Approved statutory provisions included in appendix A are listed separately in the table in paragraph (e). In separate rulemakings, EPA has taken action to approve certain regulations included in appendix B. Approved regulations are listed separately in the table in paragraph (c).

EPA APPROVED HAWAII NONREGULATORY PROVISIONS AND QUASI-REGULATORY MEASURES—Continued

Name of SIP provision	Applicable geographic or nonattainment area	State submittal date	EPA approval date	Explanation
Hawaii State Implementation Plan Revision for 2008 Lead National Ambient Air Quality Standard, Clean Air Act Section 110(a)(1) & (2), excluding attachment 6, and appendices A, B, C, F.	Statewide	2/13/13	79 FR 19012, 4/7/2014	Approved SIP revision excludes attachment 6 (''Summary of Public Participation Proceedings''), appendix A (''Hawaii Revised Statutes Chapter 342A, Air Pollution Control''), appendix B (''Hawaii Revised Statutes Chapter 84, Standards of Conduct''), appendix C (''Hawaii Administrative Rules Chapter 11–60.1, Air Pollution Control''), and appendix F (''Approval and Public Participation Proceedings from the Most Recent Amendment and Public Comment for HAR 11–60.1–90: September 15, 2001 version''). The statutory provisions in appendices A and B were previously approved and are listed separately in the table under paragraph (e). EPA-approved regulations contained in appendix C are listed separately in the table under paragraph (c). This action addresses the following CAA elements or portions thereof for the 2008 Pb NAAQS: 110(a)(2)(A), (B), (C), (D)(i)(I), (E), (F), (G), (H), (J), (K), (L), and (M).

EPA APPROVED HAWAII NONREGULATORY PROVISIONS AND QUASI-REGULATORY MEASURES—Continued

Name of SIP provision	Applicable geographic or nonattainment area	State submittal date	EPA approval date	Explanation
Hawaii State Implementation Plan Revision, National Ambient Air Quality Standards for 2008 Ozone and 2010 Nitrogen Dioxide, Clean Air Act Section 110(a)(1) & (2), excluding attachment 3, and appendices A, B, and C.	Statewide	4/4/14	8/21/14, 79 FR 49454	Approved SIP revision excludes attachment 3 (''Summary of Public Participation Proceedings''), appendix A (''Hawaii Revised Statutes, Title 19, Health, Chapter 342B, Air Pollution Control Sections 4 and 5''); appendix B (''Hawaii Administrative Rules, Title 11, Department of Health, Chapter 11–60.1, Air Pollution Control, Section 31;), appendix C (''Approvals & Public Participation Proceedings for HAR § 11–60.1–31: November 26, 1993 version''). The statutory provisions in appendix A are listed separately in the table under paragraph (e). The regulations in appendix B are listed separately in the table under paragraph (c). This action addresses the following CAA elements or portions thereof for the 2008 Ozone and 2010 Nitrogen Dioxide NAAQS: 110(a)(2)(A), (B), (C), (E), (F), (G), (H), (J), (K), (L), and (M).
Hawaii Revised Statutes, Division 1 (Government), Title 7 (Public officers and employees), Chapter 84 (Standards of Conduct)				
84–1	Construction	12/14/11	8/9/12, 77 FR 47530	Laws 1972, Act 163, pt of § 1. Included in appendix A to the Hawaii SIP revision for the 1997 ozone, and 1997 and 2006 $PM_{2.5}$ national ambient air quality standards.
84–2	Applicability	12/14/11	8/9/12, 77 FR 47530	Most recently amended in Laws 1979, Act 91, § 3. Included in appendix A to the Hawaii SIP revision for the 1997 ozone, and 1997 and 2006 $PM_{2.5}$ national ambient air quality standards.
84–3	Definitions	12/14/11	8/9/12, 77 FR 47530	Law as amended through 1984. Included in appendix A to the Hawaii SIP revision for the 1997 ozone, and 1997 and 2006 $PM_{2.5}$ national ambient air quality standards.

EPA APPROVED HAWAII NONREGULATORY PROVISIONS AND QUASI-REGULATORY MEASURES—Continued

Name of SIP provision	Applicable geographic or nonattainment area	State submittal date	EPA approval date	Explanation
84–11	Gifts	12/14/11	8/9/12, 77 FR 47530	Law as amended through 1984. Included in appendix A to the Hawaii SIP revision for the 1997 ozone, and 1997 and 2006 $PM_{2.5}$ national ambient air quality standards.
84–11.5	Reporting of gifts	12/14/11	8/9/12, 77 FR 47530	Laws 1992, Act 322, pt of § 1. Included in appendix A to the Hawaii SIP revision for the 1997 ozone, and 1997 and 2006 $PM_{2.5}$ national ambient air quality standards.
84–12	Confidential information	12/14/11	8/9/12, 77 FR 47530	Law as amended through 1984. Included in appendix A to the Hawaii SIP revision for the 1997 ozone, and 1997 and 2006 $PM_{2.5}$ national ambient air quality standards.
84–14	Conflicts of interests	12/14/11	8/9/12, 77 FR 47530	Most recently amended in Laws 1978, Act 245, § 2. Included in appendix A to the Hawaii SIP revision for the 1997 ozone, and 1997 and 2006 $PM_{2.5}$ national ambient air quality standards.
84–17	Requirements of disclosure.	12/14/11	8/9/12, 77 FR 47530	Most recently amended in Laws 2007, Act 9, § 4. Included in appendix A to the Hawaii SIP revision for the 1997 ozone, and 1997 and 2006 $PM_{2.5}$ national ambient air quality standards.
342–14	Technical defect	10/29/82	8/18/83, 48 FR 37402	Laws 1972, Act 100, pt of § 1. Included in Section III (''Legal Authority'') in the State of Hawaii Air Pollution Control Implementation Plan for Lead.
342–18	Other powers of department not affected.	10/29/82	8/18/83, 48 FR 37402	Laws 1972, Act 100, pt of § 1. Included in Section III (''Legal Authority'') in the State of Hawaii Air Pollution Control Implementation Plan for Lead.
342–19	Effect of laws, ordinances, rules, and regulations.	10/29/82	8/18/83, 48 FR 37402	Most recently amended in Laws 1977, Act 115, § 6. Included in Section III (''Legal Authority'') in the State of Hawaii Air Pollution Control Implementation Plan for Lead.

EPA APPROVED HAWAII NONREGULATORY PROVISIONS AND QUASI-REGULATORY MEASURES—Continued

Name of SIP provision	Applicable geographic or nonattainment area	State submittal date	EPA approval date	Explanation
Hawaii Revised Statutes, Division 1 (Government), Title 19 (Health), Chapter 342B (Air Pollution Control)				
342B–1	Definitions	12/14/11	8/9/12, 77 FR 47530	Most recently amended in Laws 1993, Act 208, §§ 2, 11. Included in appendix A to the Hawaii SIP revision for the 1997 ozone, and 1997 and 2006 $PM_{2.5}$ national ambient air quality standards.
342B–2	Administration	12/14/11	8/9/12, 77 FR 47530	Most recently amended in Laws 1992, Act 240, pt of § 1. Included in appendix A to the Hawaii SIP revision for the 1997 ozone, and 1997 and 2006 $PM_{2.5}$ national ambient air quality standards.
342B–3	General functions, duties, and powers of the director.	12/14/11	8/9/12, 77 FR 47530	Most recently amended in Laws 2000, Act 253, § 150. Included in appendix A to the Hawaii SIP revision for the 1997 ozone, and 1997 and 2006 $PM_{2.5}$ national ambient air quality standards.
342B–4	Other powers of department and director not affected.	4/4/14	8/21/14, 79 FR 49454	Most recently amended in Laws 1992, Act 240, pt of § 1. Included in appendix A to the Hawaii State Implementation Plan Revision, National Ambient Air Quality Standards for 2008 Ozone and 2010 Nitrogen Dioxide, Clean Air Act Section 110(a)(1) & (2).
342B–5	Effect of laws, ordinances, and rules.	4/4/14	8/21/14, 79 FR 49454	Most recently amended in Laws 1992, Act 240, pt of § 1. Included in appendix A to the Hawaii State Implementation Plan Revision, National Ambient Air Quality Standards for 2008 Ozone and 2010 Nitrogen Dioxide, Clean Air Act Section 110(a)(1) & (2).
342B–7	Annual reports	12/14/11	8/9/12, 77 FR 47530	Most recently amended in Laws 1993, Act 208, § 3. Most recently amended in Laws 1993, c 208, § 3. Included in appendix A to the Hawaii SIP revision for the 1997 ozone, and 1997 and 2006 $PM_{2.5}$ national ambient air quality standards.

EPA APPROVED HAWAII NONREGULATORY PROVISIONS AND QUASI-REGULATORY MEASURES—Continued

Name of SIP provision	Applicable geographic or nonattainment area	State submittal date	EPA approval date	Explanation
342B–11	Prohibition	12/14/11	8/9/12, 77 FR 47530	Laws 1992, Act 240, pt of § 1. Included in appendix A to the Hawaii SIP revision for the 1997 ozone, and 1997 and 2006 $PM_{2.5}$ national ambient air quality standards.
342B–12	Specific powers of the director.	12/14/11	8/9/12, 77 FR 47530	Most recently amended in Laws 1994, Act 268, § 1. Included in appendix A to the Hawaii SIP revision for the 1997 ozone, and 1997 and 2006 $PM_{2.5}$ national ambient air quality standards.
342B–13	Public participation	12/14/11	8/9/12, 77 FR 47530	Most recently amended in Laws 2000, Act 150, § 2. Included in appendix A to the Hawaii SIP revision for the 1997 ozone, and 1997 and 2006 $PM_{2.5}$ national ambient air quality standards.
342B–15	Complaints; hearings; appointment of masters.	12/14/11	8/9/12, 77 FR 47530	Laws 1992, Act 240, pt of § 1. Included in appendix A to the Hawaii SIP revision for the 1997 ozone, and 1997 and 2006 $PM_{2.5}$ national ambient air quality standards.
342B–16	Research, educational, and training programs.	12/14/11	8/9/12, 77 FR 47530	Laws 1992, Act 240, pt of § 1. Included in appendix A to the Hawaii SIP revision for the 1997 ozone, and 1997 and 2006 $PM_{2.5}$ national ambient air quality standards.
342B–17	Air quality modelers	12/14/11	8/9/12, 77 FR 47530	Most recently amended in Laws 2000, Act 253, § 150. Included in appendix A to the Hawaii SIP revision for the 1997 ozone, and 1997 and 2006 $PM_{2.5}$ national ambient air quality standards.
342B–21	Specific functions, duties, and powers of the director.	12/14/11	8/9/12, 77 FR 47530	Most recently amended in Laws 1994, Act 268, § 2. Included in appendix A to the Hawaii SIP revision for the 1997 ozone, and 1997 and 2006 $PM_{2.5}$ national ambient air quality standards.
342B–22	Permit and permit renewal; requirements.	12/14/11	8/9/12, 77 FR 47530	Laws 1992, Act 240, pt of § 1. Included in appendix A to the Hawaii SIP revision for the 1997 ozone, and 1997 and 2006 $PM_{2.5}$ national ambient air quality standards.

EPA APPROVED HAWAII NONREGULATORY PROVISIONS AND QUASI-REGULATORY MEASURES—Continued

Name of SIP provision	Applicable geographic or nonattainment area	State submittal date	EPA approval date	Explanation
342B–23	Application for permit	12/14/11	8/9/12, 77 FR 47530	Laws 1992, Act 240, pt of § 1. Included in appendix A to the Hawaii SIP revision for the 1997 ozone, and 1997 and 2006 $PM_{2.5}$ national ambient air quality standards.
342B–24	Action on a permit application.	12/14/11	8/9/12, 77 FR 47530	Most recently amended in Laws 1993, Act 208, § 5. Included in appendix A to the Hawaii SIP revision for the 1997 ozone, and 1997 and 2006 $PM_{2.5}$ national ambient air quality standards.
342B–25	Approval of permit	12/14/11	8/9/12, 77 FR 47530	Laws 1992, Act 240, pt of § 1. Included in appendix A to the Hawaii SIP revision for the 1997 ozone, and 1997 and 2006 $PM_{2.5}$ national ambient air quality standards.
342B–26	General and temporary permits; single permit.	12/14/11	8/9/12, 77 FR 47530	Most recently amended in Laws 1993, Act 208, § 6. Included in appendix A to the Hawaii SIP revision for the 1997 ozone, and 1997 and 2006 $PM_{2.5}$ national ambient air quality standards.
342B–27	Other permit action	12/14/11	8/9/12, 77 FR 47530	Laws 1992, Act 240, pt of § 1. Included in appendix A to the Hawaii SIP revision for the 1997 ozone, and 1997 and 2006 $PM_{2.5}$ national ambient air quality standards.
342B–28	Recordkeeping and monitoring requirements.	12/14/11	8/9/12, 77 FR 47530	Laws 1992, Act 240, pt of § 1. Included in appendix A to the Hawaii SIP revision for the 1997 ozone, and 1997 and 2006 $PM_{2.5}$ national ambient air quality standards.
342B–29	Fees	12/14/11	8/9/12, 77 FR 47530	Most recently amended in Laws 2009, Act 42, § 2. Included in appendix A to the Hawaii SIP revision for the 1997 ozone, and 1997 and 2006 $PM_{2.5}$ national ambient air quality standards.
342B–30	Judicial review	12/14/11	8/9/12, 77 FR 47530	Laws 1992, Act 240, pt of § 1. Included in appendix A to the Hawaii SIP revision for the 1997 ozone, and 1997 and 2006 $PM_{2.5}$ national ambient air quality standards.

EPA APPROVED HAWAII NONREGULATORY PROVISIONS AND QUASI-REGULATORY MEASURES—Continued

Name of SIP provision	Applicable geographic or nonattainment area	State submittal date	EPA approval date	Explanation
342B–31	Government records; confidential information.	12/14/11	8/9/12, 77 FR 47530	Laws 1992, Act 240, pt of § 1. Included in appendix A to the Hawaii SIP revision for the 1997 ozone, and 1997 and 2006 $PM_{2.5}$ national ambient air quality standards.
342B–32	Clean air special fund	12/14/11	8/9/12, 77 FR 47530	Laws 1992, Act 240, pt of § 1. Included in appendix A to the Hawaii SIP revision for the 1997 ozone, and 1997 and 2006 $PM_{2.5}$ national ambient air quality standards.
342B–33	Minimum permit conditions.	12/14/11	8/9/12, 77 FR 47530	Most recently amended in Laws 1994, Act 268, § 3. Included in appendix A to the Hawaii SIP revision for the 1997 ozone, and 1997 and 2006 $PM_{2.5}$ national ambient air quality standards.
342B–34	Exceptions	12/14/11	8/9/12, 77 FR 47530	Laws 1992, Act 240, pt of § 1. Included in appendix A to the Hawaii SIP revision for the 1997 ozone, and 1997 and 2006 $PM_{2.5}$ national ambient air quality standards.
342B–41	Inspection of premises	12/14/11	8/9/12, 77 FR 47530	Laws 1992, Act 240, pt of § 1. Included in appendix A to the Hawaii SIP revision for the 1997 ozone, and 1997 and 2006 $PM_{2.5}$ national ambient air quality standards.
342B–42	Enforcement	12/14/11	8/9/12, 77 FR 47530	Most recently amended in Laws 1995, Act 180, § 2. Included in appendix A to the Hawaii SIP revision for the 1997 ozone, and 1997 and 2006 $PM_{2.5}$ national ambient air quality standards.
342B–43	Emergency powers; procedures.	12/14/11	8/9/12, 77 FR 47530	Most recently amended in Laws 1995, Act 201, § 1. Included in appendix A to the Hawaii SIP revision for the 1997 ozone, and 1997 and 2006 $PM_{2.5}$ national ambient air quality standards.
342B–44	Injunctive and other relief	12/14/11	8/9/12, 77 FR 47530	Most recently amended in Laws 1995, Act 180, § 3. Included in appendix A to the Hawaii SIP revision for the 1997 ozone, and 1997 and 2006 $PM_{2.5}$ national ambient air quality standards.

EPA APPROVED HAWAII NONREGULATORY PROVISIONS AND QUASI-REGULATORY MEASURES—Continued

Name of SIP provision	Applicable geographic or nonattainment area	State submittal date	EPA approval date	Explanation
342B–45	Citation	12/14/11	8/9/12, 77 FR 47530	Most recently amended in Laws 1997, Act 27, § 1. Included in appendix A to the Hawaii SIP revision for the 1997 ozone, and 1997 and 2006 $PM_{2.5}$ national ambient air quality standards.
342B–46	Appeal	12/14/11	8/9/12, 77 FR 47530	Laws 1992, Act 240, pt of § 1. Included in appendix A to the Hawaii SIP revision for the 1997 ozone, and 1997 and 2006 $PM_{2.5}$ national ambient air quality standards.
342B–47	Civil penalties	12/14/11	8/9/12, 77 FR 47530	Most recently amended in Laws 1993, Act 208, § 8. Included in appendix A to the Hawaii SIP revision for the 1997 ozone, and 1997 and 2006 $PM_{2.5}$ national ambient air quality standards.
342B–48	Administrative penalties	12/14/11	8/9/12, 77 FR 47530	Most recently amended in Laws 1994, Act 268, § 4. Included in appendix A to the Hawaii SIP revision for the 1997 ozone, and 1997 and 2006 $PM_{2.5}$ national ambient air quality standards.
342B–49	Criminal penalties	12/14/11	8/9/12, 77 FR 47530	Most recently amended in Laws 1993, Act 208, § 9. Included in appendix A to the Hawaii SIP revision for the 1997 ozone, and 1997 and 2006 $PM_{2.5}$ national ambient air quality standards.
342B–50	Disposition of collected fines and penalties.	12/14/11	8/9/12, 77 FR 47530	Laws 1992, Act 240, pt of § 1. Included in appendix A to the Hawaii SIP revision for the 1997 ozone, and 1997 and 2006 $PM_{2.5}$ national ambient air quality standards.
342B–51	Enforcement by state and county authorities.	12/14/11	8/9/12, 77 FR 47530	Laws 1992, Act 240, pt of § 1. Included in appendix A to the Hawaii SIP revision for the 1997 ozone, and 1997 and 2006 $PM_{2.5}$ national ambient air quality standards.
342B–52	Nonliability of department personnel.	12/14/11	8/9/12, 77 FR 47530	Laws 1992, Act 240, pt of § 1. Included in appendix A to the Hawaii SIP revision for the 1997 ozone, and 1997 and 2006 $PM_{2.5}$ national ambient air quality standards.

EPA APPROVED HAWAII NONREGULATORY PROVISIONS AND QUASI-REGULATORY MEASURES—Continued

Name of SIP provision	Applicable geographic or nonattainment area	State submittal date	EPA approval date	Explanation
342B–53	Other action not barred	12/14/11	8/9/12, 77 FR 47530	Laws 1992, Act 240, pt of § 1. Included in appendix A to the Hawaii SIP revision for the 1997 ozone, and 1997 and 2006 $PM_{2.5}$ national ambient air quality standards.
342B–54	Priority in courts	12/14/11	8/9/12, 77 FR 47530	Laws 1992, Act 240, pt of § 1. Included in appendix A to the Hawaii SIP revision for the 1997 ozone, and 1997 and 2006 $PM_{2.5}$ national ambient air quality standards.
342B–55	Consent orders; settlement agreements.	12/14/11	8/9/12, 77 FR 47530	Most recently amended in Laws 1993, Act 208, § 10. Included in appendix A to the Hawaii SIP revision for the 1997 ozone, and 1997 and 2006 $PM_{2.5}$ national ambient air quality standards.

[70 FR 44854, Aug. 4, 2005; 70 FR 49377, Aug. 23, 2005, as amended at 74 FR 11040, Mar. 16, 2009; 74 FR 27710, June 11, 2009; 74 FR 36119, July 22, 2009; 77 FR 24150, Apr. 23, 2012; 77 FR 25086, Apr. 27, 2012; 77 FR 47533, Aug. 9, 2012; 78 FR 11985, Feb. 21, 2013; 79 FR 17870, Mar. 31, 2014; 79 FR 19013, Apr. 7, 2014; 79 FR 49456, Aug. 21, 2014]

§ 52.621 Classification of regions.

The Hawaii plan was evaluated on the basis of the following classifications:

Air quality control region	Pollutant				
	Particulate matter	Sulfur oxides	Nitrogen dioxide	Carbon monoxide	Photochemical oxidants (hydrocarbons)
State of Hawaii	II	III	III	III	III

[37 FR 10860, May 31, 1972]

§ 52.622 Original identification of plan.

(a) This section identified the original ''State of Hawaii Air Pollution Control Implementation Plan'' and all revisions submitted by the State of Hawaii that were federally approved prior to June 1, 2005.

(b) The plan was officially submitted on January 28, 1972.

(1) Previously approved on May 31, 1972 in paragraph (b) of this section and now deleted from the SIP without replacement Air Pollution Control Law, Hawaii Revised Statutes, chapter 322, part V, section 322–68 and Public Health Regulations, chapter 43, section 20.

(c) The plan revisions listed below were submitted on the dates specified.

(1) Certification that the plan was adopted submitted on April 4, 1972, by the Department of Health.

(2) Telegram and letters (Non-regulatory) clarifying the plan submitted on May 8, 1972, by the Governor.

(3) Telegram (Non-regulatory) clarifying the particulate matter control strategy submitted on May 22, 1972, by the Governor.

(4) Letter (Non-regulatory) clarifying disapproval of the plan submitted on June 15, 1972, by the Governor.

(i) Previously approved on November 8, 1973 in paragraph (c)(4) of this section and now deleted from the SIP without replacement S.B. No. 1382–72, Act 100, section 7.

(ii) [Reserved]

(5) Revised regulations (in their entirety) for the State of Hawaii submitted on November 21, 1972, by the Governor.

(i) Previously approved on May 14, 1973 in paragraph (c)(5) of this section and now deleted from the SIP without replacement chapter 43, section 20.

(ii) [Reserved]

(6) Regulations establishing a permit system for agricultural burning submitted on May 15, 1973, by the Governor.

(7) Compliance schedule submitted on July 27, 1973, by the Governor.

(8) 18-month extension plan for particulate matter submitted on August 15, 1973, by the Governor.

(9) Date for attainment of the national ambient air quality standards for particulate matter submitted on April 25, 1974, by the Governor.

(10) Previously approved on April 23, 1979 and now deleted without replacement: A variance to the Hawaii Public Health Regulations, chapter 43, section 7(b)(5) submitted on September 12, 1978, by the Governor.

(11) A variance to the Hawaii Public Health Regulations, Chapter 43, Section 7(b)(5) submitted on February 22, 1979 by the Governor.

(12) The following amendments to the plan were submitted on August 21, 1980, by the Governor.

(i) XII. Air Quality Surveillance Network.

(13) A variance to the Hawaii Public Health Regulations, Chapter 43, section 8 (b)(1) submitted on November 25, 1980 by the Governor.

(14) Previously approved on September 30, 1982 and now deleted without replacement: A variance of the Hawaii Public Health Regulations, chapter 43, section 8(b)(1) submitted on April 6, 1982, by the Governor.

(15) Hawaii State Lead SIP Revision submitted on October 29, 1982, by the State.

(i) Previously approved on August 18, 1983 in paragraph (c)(15) of this section and now deleted from the SIP without replacement Hawaii Statute on Environmental Quality, Hawaii Revised Statutes, chapter 342, section 342–7.

(ii) [Reserved]

(16) The following amendments to the plan were submitted on December 20, 1982 by the State.

(i) Title 11—Department of Health, Chapter 60, Air Pollution Control.

(A) Amended sections 11–60–01 thru 11–60–29, 11–60–35 thru 11–60–38.

(B) Previously approved on August 18, 1983 and now deleted without replacement section 11–60–36.

(17) The following amendment to the plan was submitted on September 14, 1988, by the Governor's designee.

(i) *Incorporation by reference.* (A) Hawaii Department of Health.

(*1*) Section XII, Air Quality Surveillance Network adopted on August 16, 1988.

[37 FR 10861, May 31, 1972, as amended at 41 FR 8959, Mar. 2, 1976; 44 FR 23828, Apr. 23, 1979; 44 FR 46274, Aug. 7, 1979; 46 FR 40513, Aug. 10, 1981; 47 FR 3111, Jan. 22, 1982; 48 FR 37403, Aug. 18, 1983; 62 FR 34648, June 27, 1997; 69 FR 41432, July 9, 2004. Redesignated and amended at 70 FR 44854, Aug. 4, 2005; 74 FR 11040, Mar. 16, 2009]

§ 52.623 Approval status.

(a) With the exceptions set forth in this subpart, the Administrator approves Hawaii's plan for attainment and maintenance of the national standards. The State included various provisions in its plan to provide for the attainment of the State ambient air quality standards. As described in the Governor's letters of January 28, May 8, and May 22, 1972, these provisions were included for information purposes only and were not to be considered a part of the plan to implement national standards. Accordingly, these additional provisions are not considered a part of the applicable plan.

(b) *1997 8-hour ozone NAAQS:* The SIP submitted on December 14, 2011 is partially disapproved for Clean Air Act (CAA) elements 110(a)(2)(C) and (J), and is disapproved for CAA elements 110(a)(2)(D)(i)(II) and (D)(ii).

(c) *1997 $PM_{2.5}$ NAAQS:* The SIP submitted on December 14, 2011 is partially disapproved for Clean Air Act (CAA)

elements 110(a)(2)(C) and (J), and is disapproved for CAA elements 110(a)(2)(D)(i)(II) and (D)(ii).

(d) *2006 $PM_{2.5}$ NAAQS:* The SIP submitted on December 14, 2011 is partially disapproved for Clean Air Act (CAA) elements 110(a)(2)(C) and (J), and is disapproved for CAA elements 110(a)(2)(D)(i)(II) and (D)(ii).

[79 FR 17874, Mar. 31, 2014]

§ 52.624 General requirements.

(a) The requirements of § 51.116(c) of this chapter are not met since the legal authority to provide for public availability of emission data is inadequate.

(b) *Regulation for public availability of emission data.* (1) Any person who cannot obtain emission data from the Agency responsible for making emission data available to the public, as specified in the applicable plan, concerning emissions from any source subject to emission limitations which are part of the approved plan may request that the appropriate Regional Administrator obtain and make public such data. Within 30 days after receipt of any such written request, the Regional Administrator shall require the owner or operator of any such source to submit information within 30 days on the nature and amounts of emissions from such source and any other information as may be deemed necessary by the Regional Administrator to determine whether such source is in compliance with applicable emission limitations or other control measures that are part of the applicable plan.

(2) Commencing after the initial notification by the Regional Administrator pursuant to paragraph (b)(1) of this section, the owner or operator of the source shall maintain records of the nature and amounts of emissions from such source and any other information as may be deemed necessary by the Regional Administrator to determine whether such source is in compliance with applicable emission limitations or other control measures that are part of the plan. The information recorded shall be summarized and reported to the Regional Administrator, on forms furnished by the Regional Administrator, and shall be submitted within 45 days after the end of the reporting period. Reporting periods are January 1 to June 30 and July 1 to December 31.

(3) Information recorded by the owner or operator and copies of this summarizing report submitted to the Regional Administrator shall be retained by the owner or operator for 2 years after the date on which the pertinent report is submitted.

(4) Emission data obtained from owners or operators of stationary sources will be correlated with applicable emission limitations and other control measures that are part of the applicable plan and will be available at the appropriate regional office and at other locations in the state designated by the Regional Administrator.

[39 FR 34536, Sept. 26, 1974, as amended at 40 FR 55329, Nov. 28, 1975; 51 FR 40676, Nov. 7, 1986]

§ 52.625 Legal authority.

(a) The requirements of § 51.230(f) of this chapter are not met, since sections 322–64(5) and 322–66 of the Hawaii Revised Statutes could, in some circumstances, prohibit the disclosure of emission data to the public. Therefore, sections 322–64(5) and 322–66 are disapproved.

[39 FR 34536, Sept. 26, 1974, as amended at 51 FR 40676, Nov. 7, 1986]

§ 52.626 Compliance schedules.

(a) [Reserved]

(b) The compliance schedules for the sources identified below are disapproved as not meeting the requirements of Subpart N of this chapter. The regulations cited are air pollution control regulations of the State.

Source	Location	Regulation sections involved	Date of adoption
Nanakuli Paving & Rock Co., Ltd.	Molokai	8, 13	7/27/73.
Kohala Corp	Halaula	8, 12	Do.

[39 FR 16348, May 8, 1974, as amended at 51 FR 40676, Nov. 7, 1986; 54 FR 25258, June 14, 1989]

§§ 52.627–52.631 [Reserved]

§ 52.632 Significant deterioration of air quality.

(a) The requirements of sections 160 through 165 of the Clean Air Act are not met, since the plan does not include approvable procedures for preventing the significant deterioration of air quality.

(b) Regulations for preventing significant deterioration of air quality. The provisions of § 52.21 except paragraph (a)(1) are hereby incorporated and made a part of the applicable State plan for the State of Hawaii.

[43 FR 26410, June 19, 1978, as amended at 45 FR 52741, Aug. 7, 1980; 68 FR 11322, Mar. 10, 2003; 68 FR 74488, Dec. 24, 2003]

§ 52.633 Visibility protection.

(a) The requirements of section 169A of the Clean Air Act are not met, because the plan does not include approvable procedures for protection of visibility in mandatory Class I Federal areas.

(b) Regulations for visibility monitoring and new source review. The provisions of §§ 52.27 and 52.28 are hereby incorporated and made part of the applicable plan for the State of Hawaii.

(c) [Reserved]

(d) *Regional Haze Plan Provisions—(1) Applicability—* This paragraph (d) applies to following electric generating units (EGUs) and boilers: Kanoelehua Hill Generating Station, Hill 5 and Hill 6; Puna Power Plant, Boiler 1; Shipman Power Plant, Boiler S–3 and Boiler S–4.

(2) *Definitions*. Terms not defined below shall have the meaning given to them in the Clean Air Act or EPA's regulations implementing the Clean Air Act. For purposes of this paragraph (d):

Owner/operator means any person who owns, leases, operates, controls, or supervises an EGU or boiler identified in paragraph (d)(1) of this section.

SO_2 means sulfur dioxide.

Unit means any of the EGUs or boilers identified in paragraph (d)(1) of this section.

(3) *Emissions cap*. The EGUs identified in paragraph (d)(1) of this section shall not emit or cause to be emitted SO_2 in excess of a total of 3,550 tons per year, calculated as the sum of total SO_2 emissions for all five units over a rolling 12-month period.

(4) *Compliance date*. Compliance with the emissions cap and other requirements of this section is required at all times on and after December 31, 2018.

(5) *Monitoring, recordkeeping and reporting requirements*.

(i) All records, including support information, required by paragraph (d)(5) of this section shall be maintained for at least five (5) years from the date of the measurement, test or report. These records shall be in a permanent form suitable for inspection and made available to EPA, the Hawaii Department of Health or their representatives upon request.

(ii) The owners and operators of the EGUs identified in paragraph (d)(1) of this section shall maintain records of fuel deliveries identifying the delivery dates and the type and amount of fuel received. The fuel to be fired in the boilers shall be sampled and tested in accordance with the most current American Society for Testing and Materials (ASTM) methods.

(iii) The owners and operators of the EGUs identified in paragraph (d)(1) of this section shall analyze a representative sample of each batch of fuel received for its sulfur content and heat value following ASTM D4057. The samples shall be analyzed for the total sulfur content of the fuel using ASTM D129, or alternatively D1266, D1552, D2622, D4294, or D5453.

(iv) The owners and operators of the EGUs identified in paragraph (d)(1) of this section shall calculate on a monthly basis the SO_2 emissions for each unit for the preceding month based on the sulfur content, heat value and total gallons of fuel burned.

(v) The owners and operators of the EGUs identified in paragraph (d)(1) of this section shall calculate on a monthly basis the total emissions for all units for the preceding twelve (12) months.

(vi) The owners and operators of the EGUs identified in paragraph (d)(1) of this section shall notify the Hawaii Department of Health and EPA Region 9 of any exceedance of the emission cap

in paragraph (d)(3) of this section within thirty (30) days of such exceedance.

(vii) By March 1, 2019 and within sixty (60) days following the end of each calendar year thereafter, the owners and operators of the EGUs identified in paragraph (d)(1) of this section shall report to the Hawaii Department of Health and EPA Region 9 the total tons of SO_2 emitted from all units for the preceding calendar year by month and the corresponding rolling 12-month total emissions for all units.

(viii) Any document (including reports) required to be submitted by this rule shall be certified as being true, accurate, and complete by a responsible official and shall be mailed to the following addresses: Clean Air Branch, Environmental Management Division, State of Hawaii Department of Health, P.O. Box 3378, Honolulu, HI 96801–3378 and Director of Enforcement Division, U.S. EPA Region IX, 75 Hawthorne Street, San Francisco, CA 94105.

[50 FR 28553, July 12, 1985, as amended at 52 FR 45137, Nov. 24, 1987; 77 FR 61506, Oct. 9, 2012; 82 FR 3129, Jan. 10, 2017]

§ 52.634 Particulate matter (PM–10) Group III SIP.

(a) On September 14, 1988, the Governor of Hawaii submitted a revision to the State Implementation Plan (SIP) for implementing the required monitoring activities and other tasks necessary to satisfy the requirements of the PM–10 Group III SIP.

(b) The Hawaii Department of Health has committed to meet the ongoing requirements for PM–10 Group III areas.

[55 FR 18110, May 1, 1990]

Subpart N—Idaho

§ 52.670 Identification of plan.

(a) *Purpose and scope.* This section sets forth the applicable State implementation plan for Idaho under section 110 of the Clean Air Act, 42 U.S.C. 7401, and 40 CFR part 51 to meet national ambient air quality standards.

(b) *Incorporation by reference.* (1) Material listed as incorporated by reference in paragraphs (c) and (d) was approved for incorporation by reference by the Director of the Federal Register in accordance with 5 U.S.C. 552(a) and 1 CFR part 51. The material incorporated is as it exists on the date of the approval, and notice of any change in the material will be published in the FEDERAL REGISTER. Entries in paragraphs (c) and (d) of this section with EPA approval dates on or after January 15, 2015, will be incorporated by reference in the next update to the SIP compilation.

(2)(i) EPA Region 10 certifies that the rules and regulations provided by EPA at the addresses in paragraph (b)(3) of this section are an exact duplicate of the officially promulgated State rules and regulations which have been approved as part of the State implementation plan as of January 15, 2015.

(ii) EPA Region 10 certifies that the source-specific requirements provided by EPA at the addresses in paragraph (b)(3) of this section are an exact duplicate of the officially promulgated source-specific requirements which have been approved in the notebook ''40 CFR 52.670(d)—Source Specific Requirements'' as part of the State implementation plan as of January 15, 2015.

(3) Copies of the materials incorporated by reference may be inspected at the EPA Region 10 Office of Air, Waste, and Toxics (AWT–150), 1200 Sixth Avenue, Seattle, Washington 98101; or at the National Archives and Records Administration (NARA). For information on the availability of this material at NARA, call 202–741–6030, or go to: *http://www.archives.gov/federal_register/code_of_federal_regulations/ibr_locations.html.*

(c) *EPA approved regulations.*

EPA APPROVED IDAHO REGULATIONS AND STATUTES

State citation	Title/subject	State effective date	EPA approval date	Explanations
Idaho Administrative Procedures Act (IDAPA) 58.01.01—Rules for the Control of Air Pollution in Idaho				
001	Title and Scope	5/1/1994	1/16/2003, 68 FR 2217.	
004	Catchlines	5/1/1994	1/16/2003, 68 FR 2217.	
005	Definitions	5/1/1994	1/16/2003, 68 FR 2217.	
006	General Definitions	4/11/2015, 4/4/2013, 3/30/2007, 4/11/2006, 7/1/2002, 4/5/2000, 3/20/1997, 5/1/1994	8/12/2016, 81 FR 53290	Except Section 006.49, 006.50, 006.51, 006.66, 006.67, 006.68.b, 006.116, and 006.118.
007	Definitions for the Purposes of Sections 200 through 225 and 400 through 461.	3/30/2007, 4/11/2006, 4/5/2000, 6/30/1995, 5/1/1995, 5/1/1994	6/9/2011, 76 FR 33647.	
011	Definitions for the Purposes of Sections 790 through 799.	3/15/2002	8/12/2016, 81 FR 53290.	
106	Abbreviations	5/1/1994	1/16/2003, 68 FR 2217.	
107	Incorporation by Reference	3/25/2016, 3/20/2014, 3/30/2007, 7/1/1997, 5/1/1994	5/12/2017, 82 FR 22083	Except Section 107.03.f through 107.03.p, and with respect to 107.03.a the incorporation by reference of 40 CFR 51.165.
121	Compliance Requirements by Department.	5/1/1994	1/16/2003, 68 FR 2217.	
122	Information Orders by the Department.	4/5/2000, 5/1/1994	1/16/2003, 68 FR 2217.	
123	Certification of Documents	5/1/1994	1/16/2003, 68 FR 2217.	
124	Truth, Accuracy and Completeness of Documents.	5/1/1994	1/16/2003, 68 FR 2217.	
125	False Statements	3/23/1998	1/16/2003, 68 FR 2217.	
126	Tampering	3/23/1998	1/16/2003, 68 FR 2217.	
127	Format of Responses	5/1/1994	1/16/2003, 68 FR 2217.	
130	Startup, Shutdown, Scheduled Maintenance, Safety Measures, Upset and Breakdown.	4/5/2000	1/16/2003, 68 FR 2217.	
131	Excess Emissions	4/5/2000	1/16/2003, 68 FR 2217.	
132	Correction of Condition	4/5/2000	1/16/2003, 68 FR 2217.	
133	Start-up, Shutdown and Scheduled Maintenance Requirements.	4/11/2006, 4/5/2000, 3/20/1997	11/26/2010, 75 FR 72719.	
134	Upset, Breakdown and Safety Requirements.	4/11/2006, 4/5/2000, 3/20/1997	11/26/2010, 75 FR 72719.	
135	Excess Emission Reports	4/11/2006, 4/5/2000, 3/20/1997	11/26/2010, 75 FR 72719.	
136	Excess Emission Records	4/5/2000, 3/23/1998, 3/20/1997	1/16/2003, 68 FR 2217.	
155	Circumvention	4/11/2006	11/26/2010, 75 FR 72719.	
156	Total Compliance	5/1/1994	1/16/2003, 68 FR 2217.	
157	Test Methods and Procedures.	4/11/2015	8/12/2016, 81 FR 53290.	
160	Provisions Governing Specific Activities and Conditions.	4/5/2000	1/16/2003, 68 FR 2217.	
162	Modifying Physical Conditions.	5/1/1994	1/16/2003, 68 FR 2217.	
163	Source Density	5/1/1994	1/16/2003, 68 FR 2217.	
164	Polychlorinated Biphenyls (PCBs).	5/1/1994	1/16/2003, 68 FR 2217.	

EPA APPROVED IDAHO REGULATIONS AND STATUTES—Continued

State citation	Title/subject	State effective date	EPA approval date	Explanations
175	Procedures and Requirements for Permits Establishing a Facility Emissions Cap.	4/11/2015	8/12/2016, 81 FR 53290.	
176	Facility Emissions Cap	4/11/2015	8/12/2016, 81 FR 53290	Except for provisions relating to hazardous air pollutants.
177	Application Procedures	4/11/2015	8/12/2016, 81 FR 53290.	
178	Standard Contents of Permits Establishing a Facility Emissions Cap.	4/11/2015	8/12/2016, 81 FR 53290.	
179	Procedures for Issuing Permits Establishing a Facility Emissions Cap.	4/11/2015	8/12/2016, 81 FR 53290.	
180	Revisions to Permits Establishing a Facility Emissions Cap.	4/11/2015	8/12/2016, 81 FR 53290.	
181	Notice and Record-Keeping of Estimates of Ambient Concentrations.	4/11/2015	8/12/2016, 81 FR 53290.	
200	Procedures and Requirements for Permits to Construct.	3/25/2016	5/12/2017, 82 FR 22083.	
201	Permit to Construct Required.	4/11/2006	8/12/2016, 81 FR 53290.	
202	Application Procedures	4/11/2015	8/12/2016, 81 FR 53290.	
203	Permit Requirements for New and Modified Stationary Sources.	5/1/1994	1/16/2003, 68 FR 2217	(Except subsection 203.03).
204	Permit Requirements for New Major Facilities or Major Modifications in Nonattainment Areas.	4/2/2008, 3/30/2007, 4/6/2005, 4/5/2000, 5/1/1994	11/26/2010, 75 FR 72719.	
205	Permit Requirements for New Major Facilities or Major Modifications in Attainment or Unclassifiable Areas.	4/2/2008, 3/30/2007, 4/6/2005	11/26/2010, 75 FR 72719.	
206	Optional Offsets for Permits to Construct.	4/6/2005	11/26/2010, 75 FR 72719.	
207	Requirements for Emission Reduction Credit.	5/1/1994	1/16/2003, 68 FR 2217.	
208	Demonstration of Net Air Quality Benefit.	4/5/2000, 5/1/1994	1/16/2003, 68 FR 2217.	
209	Procedures for Issuing Permits.	4/11/2006, 4/6/2005, 5/3/2003, 7/1/2002, 4/5/2000, 3/19/1999, 3/23/1998, 5/1/1994	11/26/2010, 75 FR 72719.	
211	Conditions for Permits to Construct.	5/1/1994	1/16/2003, 68 FR 2217.	
212	Obligation to Comply	5/1/1994	1/16/2003, 68 FR 2217.	
213	Pre-Permit Construction	4/11/2006, 5/3/2003, 4/5/2000, 3/23/1998	11/26/2010, 75 FR 72719.	
220	General Exemption Criteria for Permit to Construct Exemptions.	4/4/2013, 4/5/2000	3/3/2014, 79 FR 11711.	
221	Category I Exemption	4/5/2000	1/16/2003, 68 FR 2217.	
222	Category II Exemption	4/4/2013, 4/11/2006, 4/5/2000, 5/1/1994, 7/1/1997	3/3/2014, 79 FR 11711.	

EPA APPROVED IDAHO REGULATIONS AND STATUTES—Continued

State citation	Title/subject	State effective date	EPA approval date	Explanations
400	Procedures and Requirements for Tier II Operating Permits.	7/1/2002	11/26/2010, 75 FR 72719.	
401	Tier II Operating Permit	4/11/2015	8/12/2016, 81 FR 53290	Except Section 401.01.a and 401.04.
402	Application Procedures	7/1/2002, 5/1/1994, 4/5/2000, 7/1/2002	11/26/2010, 75 FR 72719.	
403	Permit Requirements for Tier II Sources.	5/1/1994	1/16/2003, 68 FR 2217.	
404	Procedure for Issuing Permits.	4/11/2006, 4/5/2000, 5/1/1994, 7/1/2002	11/26/2010, 75 FR 72719.	
405	Conditions for Tier II Operating Permits.	5/1/1994	1/16/2003, 68 FR 2217.	
406	Obligation to Comply	5/1/1994	1/16/2003, 68 FR 2217.	
460	Requirements for Emission Reduction Credits.	4/11/2006, 4/5/2000, 5/1/1994	11/26/2010, 75 FR 72719.	
461	Requirements for Banking Emission Reduction Credits (ERC's).	4/5/2000, 5/1/1994	1/16/2003, 68 FR 2217.	
500	Registration Procedures and Requirements for Portable Equipment.	5/1/1994	1/16/2003, 68 FR 2217.	
510	Stack Heights and Dispersion Techniques.	5/1/1994	1/16/2003, 68 FR 2217.	
511	Applicability	4/11/2006	11/26/2010, 75 FR 72719.	
512	Definitions	4/11/2006, 5/1/1994, 4/5/2000	11/26/2010, 75 FR 72719.	
513	Requirements	4/11/2006	11/26/2010, 75 FR 72719.	
514	Opportunity for Public Hearing.	5/1/1994	1/16/2003, 68 FR 2217.	
515	Approval of Field Studies and Fluid Models.	5/1/1994	1/16/2003, 68 FR 2217.	
516	No Restriction on Actual Stack Height.	5/1/1994	1/16/2003, 68 FR 2217.	
550	Air Pollution Emergency Rule.	5/1/1994	1/16/2003, 68 FR 2217.	
551	Episode Criteria	5/1/1994	1/16/2003, 68 FR 2217.	
552	Stages	3/15/2002, 5/1/1994	1/16/2003, 68 FR 2217.	
553	Effect of Stages	3/15/2002	1/16/2003, 68 FR 2217.	
556	Criteria for Defining Levels Within Stages.	3/15/2002, 4/5/2000	1/16/2003, 68 FR 2217.	
557	Public Notification	5/1/1994	1/16/2003, 68 FR 2217.	
558	Information To Be Given	3/15/2002, 5/1/1994	1/16/2003, 68 FR 2217.	
559	Manner and Frequency of Notification.	5/1/1994	1/16/2003, 68 FR 2217.	
560	Notification to Sources	4/11/2006	11/26/2010, 75 FR 72719.	
561	General Rules	4/11/2006, 5/1/1994, 3/15/2002	11/26/2010, 75 FR 72719.	
562	Specific Emergency Episode Abatement Plans for Point Sources.	5/1/1994	1/16/2003, 68 FR 2217.	
563	Transportation Conformity	3/30/2001	4/12/2001, 66 FR 18873.	
564	Incorporation by Reference	3/30/2001	4/12/2001, 66 FR 18873.	
565	Abbreviations	3/30/2001	4/12/2001, 66 FR 18873.	
566	Definitions for the Purpose of Sections 563 Through 574 and 582.	3/30/2001	4/12/2001, 66 FR 18873.	
567	Agencies Affected by Consultation.	3/30/2001	4/12/2001, 66 FR 18873.	
568	ICC Member Roles in Consultation.	3/30/2001	4/12/2001, 66 FR 18873.	

EPA APPROVED IDAHO REGULATIONS AND STATUTES—Continued

State citation	Title/subject	State effective date	EPA approval date	Explanations
569	ICC Member Responsibilities in Consultation.	3/30/2001	4/12/2001, 66 FR 18873.	
570	General Consultation Process.	3/30/2001	4/12/2001, 66 FR 18873.	
571	Consultation Procedures	3/30/2001	4/12/2001, 66 FR 18873.	
572	Final Conformity Determinations by USDOT.	3/30/2001	4/12/2001, 66 FR 18873.	
573	Resolving Conflicts	3/30/2001	4/12/2001, 66 FR 18873.	
574	Public Consultation Procedures.	3/30/2001	4/12/2001, 66 FR 18873.	
575	Air Quality Standards and Area Classification.	4/11/2006	11/26/2010, 75 FR 72719.	
576	General Provisions for Ambient Air Quality Standards.	5/1/1994	1/16/2003, 68 FR 2217.	
578	Designation of Attainment, Unclassifiable, and Nonattainment Areas.	5/1/1994	1/16/2003, 68 FR 2217.	
579	Baselines for Prevention of Significant Deterioration.	4/11/2015	8/12/2016, 81 FR 53290.	
580	Classification of Prevention of Significant Deterioration Areas.	4/5/2000, 5/1/1994	1/16/2003, 68 FR 2217.	
581	Prevention of Significant Deterioration (PSD) Increments.	10/6/2010,4/11/2006, 7/1/1997, 5/1/1994	7/17/2012, 77 FR 41916.	
582	Interim Conformity Provisions for Northern Ada County Former Nonattainment Area for PM–10.	3/30/2001	4/12/2001, 66 FR 18873.	
600	Rules for Control of Open Burning.	4/2/2008	8/1/2008, 73 FR 44915	Previous EPA Approval Date of 7/11/2005 removed in response to 9th Circuit remand.
601	Fire Permits, Hazardous Materials and Liability.	4/2/2008	8/1/2008, 73 FR 44915	Previous EPA Approval Date of 7/11/2005 removed in response to 9th Circuit remand.
602	Nonpreemption of Other Jurisdictions.	4/2/2008	8/1/2008, 73 FR 44915	Previous EPA Approval Date of 7/11/2005 removed in response to 9th Circuit remand.
603	General Restrictions	4/2/2008,3/21/2003, 5/1/1994	8/1/2008, 73 FR 44915	Previous EPA Approval Date of 7/11/2005 removed in response to 9th Circuit remand.
606	Categories of Allowable Burning.	4/2/2008	8/1/2008, 73 FR 44915	Previous EPA Approval Date of 7/11/2005 removed in response to 9th Circuit remand.
607	Recreational and Warming Fires.	3/21/2003	8/1/2008, 73 FR 44915	Previous EPA Approval Date of 7/11/2005 removed in response to 9th Circuit remand.
608	Weed Control Fires	5/1/1994	8/1/2008, 73 FR 44915	Previous EPA Approval Date of 7/11/2005 removed in response to 9th Circuit remand.
609	Training Fires	3/21/2003	8/1/2008, 73 FR 44915	Previous EPA Approval Date of 7/11/2005 removed in response to 9th Circuit remand.
610	Industrial Flares	3/21/2003	8/1/2008, 73 FR 44915	Previous EPA Approval Date of 7/11/2005 removed in response to 9th Circuit remand.

EPA APPROVED IDAHO REGULATIONS AND STATUTES—Continued

State citation	Title/subject	State effective date	EPA approval date	Explanations
611	Residential Solid Waste Disposal Fires.	5/1/1994	1/16/2003, 68 FR 2217.	
612	Landfill Disposal Site Fires	3/21/2003	8/1/2008, 73 FR 44915	Previous EPA Approval Date of 7/11/2005 removed in response to 9th Circuit remand.
613	Orchard Fires	3/21/2003, 5/1/1994	8/1/2008, 73 FR 44915	Previous EPA Approval Date of 7/11/2005 removed in response to 9th Circuit remand.
614	Prescribed Burning	5/1/1994	1/16/2003, 68 FR 2217.	
615	Dangerous Material Fires	3/21/2003	8/1/2008, 73 FR 44915	Previous EPA Approval Date of 7/11/2005 removed in response to 9th Circuit remand.
616	Infectious Waste Burning	3/21/2003	8/1/2008, 73 FR 44915	Previous EPA Approval Date of 7/11/2005 removed in response to 9th Circuit remand.
617	Crop Residue	7/1/2011, 4/2/2008	3/19/2013, 78 FR 16790.	
618	Permit By Rule	7/1/2011, 4/2/2008	3/19/2013, 78 FR 16790.	
619	Registration for Permit By Rule.	4/2/2008	8/1/2008, 73 FR 44915.	
620	Registration Fee	7/1/2011, 4/2/2008	3/19/2013, 78 FR 16790.	
621	Burn Determination	4/2/2008	8/1/2008, 73 FR 44915.	
622	General Provisions	7/1/2011, 4/2/2008	3/19/2013, 78 FR 16790.	
623	Public Notification	7/1/2011, 4/2/2008	3/19/2013, 78 FR 16790.	
624	Spot Burn, Baled Agricultural Residue Burn, and Propane Flaming Permits.	7/1/2011	3/19/2013, 78 FR 16790.	
625	Visible Emissions	4/2/2008	8/1/2008, 73 FR 44915.	
626	General Restrictions on Visible Emissions from Wigwam Burners.	4/5/2000	1/16/2003, 68 FR 2217.	
650	Rules for Control of Fugitive Dust.	5/1/1994	1/16/2003, 68 FR 2217.	
651	General Rules	3/30/2007, 5/1/1994	6/9/2011, 76 FR 33647.	
665	Regional Haze Rules	3/30/2007	6/9/2011, 76 FR 33647.	
666	Reasonable Progress Goals.	3/30/2007	6/9/2011, 76 FR 33647.	
667	Long-Term Strategy for Regional Haze.	3/30/2007	6/9/2011, 76 FR 33647.	
668	BART Requirement for Regional Haze.	3/30/2007	6/9/2011, 76 FR 33647.	
675	Fuel Burning Equipment—Particulate Matter.	4/5/2000	1/16/2003, 68 FR 2217.	
676	Standards for New Sources.	5/1/1994	1/16/2003, 68 FR 2217.	
677	Standards for Minor and Existing Sources.	5/1/1994	1/16/2003, 68 FR 2217.	
678	Combinations of Fuels	5/1/1994	1/16/2003, 68 FR 2217.	
679	Averaging Period	4/11/2006, 5/1/1994	11/26/2010, 75 FR 72719.	
680	Altitude Correction	5/1/1994	1/16/2003, 68 FR 2217.	
681	Test Methods and Procedures.	4/5/2000	1/16/2003, 68 FR 2217.	
700	Particulate Matter Process Weight Limitations.	5/3/2003, 4/5/2000	11/26/2010, 75 FR 72719.	
701	Particulate Matter—New Equipment Process Weight Limitations.	4/5/2000	1/16/2003, 68 FR 2217.	

EPA APPROVED IDAHO REGULATIONS AND STATUTES—Continued

State citation	Title/subject	State effective date	EPA approval date	Explanations
702	Particulate Matter—Existing Equipment Process Weight Limitations.	4/5/2000, 5/1/1994	1/16/2003, 68 FR 2217.	
703	Particulate Matter—Other Processes.	4/5/2000	1/16/2003, 68 FR 2217.	
725	Rules for Sulfur Content of Fuels.	4/11/2015	8/12/2016, 81 FR 53290.	
785	Rules for Control of Incinerators.	5/1/1994	1/16/2003, 68 FR 2217.	
786	Emission Limits	4/5/2000	1/16/2003, 68 FR 2217.	
787	Exceptions	3/23/1998	1/16/2003, 68 FR 2217.	
790	Rules for the Control of Nonmetallic Mineral Processing Plants.	3/15/2002	8/12/2016, 81 FR 53290.	
791	General Control Requirements.	3/15/2002	8/12/2016, 81 FR 53290.	
793	Emissions Standards for Nonmetallic Mineral Processing Plants not Subject to 40 CFR 60, Subpart OOO.	3/15/2002	8/12/2016, 81 FR 53290.	
794	Permit Requirements	4/11/2015	8/12/2016, 81 FR 53290	Except Section 794.04.
795	Permit by Rule Requirements.	3/15/2002	8/12/2016, 81 FR 53290.	
796	Applicability	3/15/2002	8/12/2016, 81 FR 53290.	
797	Registration for Permit by Rule.	3/15/2002	8/12/2016, 81 FR 53290.	
798	Electrical Generators	3/15/2002	8/12/2016, 81 FR 53290.	
799	Nonmetallic Mineral Processing Plan Fugitive Dust Best Management Practice.	3/15/2002	8/12/2016, 81 FR 53290.	
805	Rules for Control of Hot-mix Asphalt Plants.	5/1/1994	1/16/2003, 68 FR 2217.	
806	Emission Limits	5/1/1994	1/16/2003, 68 FR 2217.	
807	Multiple Stacks	5/1/1994	1/16/2003, 68 FR 2217.	
808	Fugitive Dust Control	5/1/1994	1/16/2003, 68 FR 2217.	
815	Rules for Control of Kraft Pulping Mills.	5/1/1994	1/16/2003, 68 FR 2217.	
816	Statement of Policy	5/1/1994	1/16/2003, 68 FR 2217.	
817	General Rules	5/1/1994	1/16/2003, 68 FR 2217.	
821	Recovery Furnace Particulate Standards.	5/1/1994	1/16/2003, 68 FR 2217.	
822	Lime Kiln Standards	5/1/1994	1/16/2003, 68 FR 2217.	
823	Smelt Tank Standards	5/1/1994	1/16/2003, 68 FR 2217.	
824	Monitoring and Reporting	4/5/2000, 5/1/1994	1/16/2003, 68 FR 2217	(Except subsection 824.01).
825	Special Studies	5/1/1994	1/16/2003, 68 FR 2217.	
826	Exceptions	5/1/1994	1/16/2003, 68 FR 2217.	
845	Rules for Control of Sulfur Oxide Emissions from Sulfuric Acid Plants.	5/1/1994	1/16/2003, 68 FR 2217.	
846	Emission Limits	4/5/2000	1/16/2003, 68 FR 2217.	
847	Monitoring and Testing	4/5/2000	1/16/2003, 68 FR 2217.	
848	Compliance Schedule	5/1/1994	1/16/2003, 68 FR 2217.	
City and County Ordinances				
City of Sandpoint Ordinance No. 939.	Material Specifications for Street Sanding Material.	2/22/1994 (City adoption date)	6/26/2002, 67 FR 43006	Sandpoint PM_{10} Non-attainment Area Plan.

EPA APPROVED IDAHO REGULATIONS AND STATUTES—Continued

State citation	Title/subject	State effective date	EPA approval date	Explanations
City of Sandpoint Chapter 8 Air Quality (4–8–1 through 4–8–14).	Solid Fuel Heating Appliances.	9/21/2011 (City adoption date)	4/3/2013, 78 FR 20001	Codified version of City of Sandpoint Ordinance No. 965 as amended by Ordinance No. 1237 and Ordinance No. 1258. Sandpoint PM_{10} Limited Maintenance Plan.
Ada County Ordinance ...	The 1999 Motor Vehicle Emissions Control Ordinance.	6/15/1999 (County approval date)	10/28/2002, 67 FR 65713	Northern Ada County CO Maintenance Plan.
City of Boise Ordinance	The 1999 Motor Vehicle Emissions Control Ordinance.	7/20/1999 (City approval date)	10/28/2002, 67 FR 65713	Northern Ada County CO Maintenance Plan.
City of Eagle Ordinance	The 1999 Motor Vehicle Emissions Control Ordinance.	4/27/1999 (City approval date)	10/28/2002, 67 FR 65713	Northern Ada County CO Maintenance Plan.
City of Garden City Ordinance.	The 1991 Vehicle Emission Control Ordinance.	8/13/1996 (Most recently amended)	10/28/2002, 67 FR 65713	Northern Ada County CO Maintenance Plan.
City of Meridian Ordinance.	The 1999 Motor Vehicle Emissions Control Ordinance.	6/1/1999 (City approval date)	10/28/2002, 67 FR 65713	Northern Ada County CO Maintenance Plan.
Boise City Ordinance 4432.	Parking Permits	8/13/1979 (City approval date)	6/6/1985, 50 FR 23810	Transportation Control Plan for carbon monoxide, Ada County.
City of Garden City Ordinance 514, 533, and 624.	Solid Fuel Heating Appliance Ordinance of the City of Garden City, Idaho.	5/14/1987, 1/10/1989, 9/13/1994 (City approval dates)	5/30/1996, 61 FR 27019	Northern Ada County PM_{10} Nonattainment Area Plan.
Meridian Ordinance 667	Meridian Clean Air Ordinance.	8/16/1994 (City approval date)	5/30/1996, 61 FR 27019	Northern Ada County PM_{10} Nonattainment Area Plan.
City of Eagle Ordinance 245.	City of Eagle Clean Air Ordinance.	4/26/1994 (City approval date)	5/30/1996, 61 FR 27019	Northern Ada County PM_{10} Nonattainment Area Plan.
Ada County Ordinance 254.	Ada County Clean Air Ordinance.	11/3/1992 (County adoption date)	5/30/1996, 61 FR 27019	Northern Ada County PM_{10} Nonattainment Area Plan.
Table: Ordinance-1	Explanation of enforcement procedures, responsibilities and sources of funding for the Northern Ada County Wood Burning Control Ordinances.	12/30/1994 (date of table)	5/30/1996, 61 FR 27019	Northern Ada County PM_{10} Nonattainment Area Plan.
City of Pocatello Ordinance 2450.	Residential wood combustion curtailment ordinance.	1/12/1994	7/13/2006, 71 FR 39574	(Portneuf Valley Nonattainment Area Plan and Maintenance Plan).
City of Pocatello Ordinance 2726.	Revised air quality curtailment levels.	9/18/2003	7/13/2006, 71 FR 39574	(Portneuf Valley Nonattainment Area Plan and Maintenance Plan).
City of Chubbuck Ordinance 403.	Residential wood combustion curtailment ordinance.	11/23/1993	7/13/2006, 71 FR 39574	(Portneuf Valley Nonattainment Area Plan and Maintenance Plan).

EPA APPROVED IDAHO REGULATIONS AND STATUTES—Continued

State citation	Title/subject	State effective date	EPA approval date	Explanations
City of Chubbuck Ordinance 582.	Revised air quality curtailment levels.	12/9/2003	7/13/2006, 71 FR 39574	(Portneuf Valley Nonattainment Area Plan and Maintenance Plan).
City of Clifton Ordinance No. 120.	Ordinance No. 120	8/11/2012	3/25/2014, 79 FR 16201	Except Section 9 (Penalty).
City of Dayton Ordinance #287.	Ordinance #287	8/8/2012	3/25/2014, 79 FR 16201	Except Section 9 (Penalty).
Franklin City Ordinance No. 2012–9–12.	Solid Fuel Heating Appliances.	9/12/2012	3/25/2014, 79 FR 16201	Except Section 9 (Penalty).
Franklin County Ordinance No. 2012–6–25.	Solid Fuel Heating Appliances.	6/25/2012	3/25/2014, 79 FR 16201	Except Section 9 (Penalty).
City of Oxford Memorandum of Understanding.	Solid Fuel Heating Appliances.	10/22/2012	3/25/2014, 79 FR 16201	Except #2 of the MOA and Section 9 of Exhibit A.
City of Preston Ordinance No. 2012–1.	Ordinance No. 2012–1	6/11/2012	3/25/2014, 79 FR 16201	Except Section 9 (Penalty).
City of Weston Ordinance No. 2012–01.	Ordinance No. 2012–01	8/1/2012	3/25/2014, 79 FR 16201	Except Section 9 (Penalty).
State Statutes				
Section 1 of House Bill 557, codified at Idaho Code section 39–114.	Open Burning of Crop Residue.	3/7/2008	8/1/2008, 73 FR 44915.	

(d) *EPA approved State Source-specific requirements.*

EPA APPROVED IDAHO SOURCE-SPECIFIC REQUIREMENTS [1]

Name of source	Permit No.	State effective date	EPA approval date	Explanation
LP Wood Polymers, Inc., Meridian, Idaho.	001–00115	7/12/2002	10/27/2003, 68 FR 61106	The following conditions: 1.1, 1.3, 3.1, and the Appendix. (Boise/Ada County Maintenance Plan).
Consolidated Concrete Company, Boise, Idaho.	001–00046	12/3/2001	10/27/2003, 68 FR 61106	The following conditions: 1.1, 1.3, 2.3, 3.1, 3.2, and the Appendix. (Boise/Ada County Maintenance Plan).
Crookham Company, Caldwell, Idaho.	027–00020	1/18/2002	10/27/2003, 68 FR 61106	The following conditions: 1.1, 1.3, 2.1, 2.3, 3.1, 3.1.1, 3.1.2, 3.2, and the Appendix. (Boise/Ada County Maintenance Plan).
Double D Service Center, Meridian, Idaho.	001–00168	2/4/2002	10/27/2003, 68 FR 61106	The following conditions: 1.1, 1.3, 3.1, 3.2.1, 3.2.2, 3.2.3, and the Appendix. (Boise/Ada County Maintenance Plan).
Plum Creek Northwest Lumber, Inc., Meridian, Idaho.	001–00091	7/12/2002	10/27/2003, 68 FR 61106	The following conditions: 1.1, 1.3, 2.1.2, 3.1, and the Appendix. (Boise/Ada County Maintenance Plan).
C. Wright Construction, Inc., Meridian, Idaho.	T2–000033	7/8/2003	10/27/2003, 68 FR 61106	The following conditions: 2 (heading only), 2.5, (2.12, Table 2.2 as it applies to PM_{10}), 2.14, 3 (heading only), 3.3, Table 3.2, 3.4, 3.5, 3.6, 3.7, 3.8, 3.10, 4 (heading only), 4.2, 4.3, 4.4, 4.7, 5, and Table 5.1. (Boise/Ada County Maintenance Plan).

EPA APPROVED IDAHO SOURCE-SPECIFIC REQUIREMENTS [1]—Continued

Name of source	Permit No.	State effective date	EPA approval date	Explanation
Nelson Construction Co., Boise, Idaho.	T2–020029	7/21/2003	10/27/2003, 68 FR 61106	The following conditions: 2 (heading only), 2.12, 2.14, 3 (heading only), 3.3, 3.4, 3.6, 3.7, 3.9, 3.10, 3.11, 3.12, 4 (heading only), 4.3, 4.4, 4.5, 4.6, 5, and Table 5.1. (Boise/Ada County Maintenance Plan).
Mike's Sand and Gravel, Nampa, Idaho.	001–00184	7/12/2002	10/27/2003, 68 FR 61106 ...	The following conditions: 1.1, 1.3, 2.2.1, 3.1, and the Appendix. (Boise/Ada County Maintenance Plan).
Idaho Concrete Co., Eagle, Idaho.	T2–020031	7/8/2003	10/27/2003, 68 FR 61106	The following conditions: 2 (heading only), 2.5, 2.13, 3 (heading only), 3.3, 3.4, 3.6, 3.7, 3.8, 4 (heading only), and Table 4.1. (Boise/Ada County Maintenance Plan).
Idaho Concrete Co., Eagle, Idaho.	T2–020032	7/8/2003	10/27/2003, 68 FR 61106	The following conditions: 2 (heading only), 2.5, 2.13, 3 (heading only), 3.3, 3.4, 3.6, 3.7, 3.8, 4 (heading only), and Table 4.1. (Boise/Ada County Maintenance Plan).
Idaho Concrete Co. Eagle, Idaho.	T2–020033	7/8/2003	10/27/2003, 68 FR 61106	The following conditions: 2 (heading only), 2.5, 2.13, 3 (heading only), 3.3, 3.4, 3.6, 3.7, 3.8, 4 (heading only), and Table 4.1. (Boise/Ada County Maintenance Plan).

EPA APPROVED IDAHO SOURCE-SPECIFIC REQUIREMENTS [1]—Continued

Name of source	Permit No.	State effective date	EPA approval date	Explanation
The Amalgamated Sugar Company LLC, Nampa, Idaho.	027–00010	9/30/2002	10/27/2003, 68 FR 61106 and 11/1/2004, 69 FR 63324.	The following conditions: 2 (heading only), (2.7, Table 2.2 as it applies to PM_{10},) 2.10, 2.10.1, 2.10.2, 2.11, 2.11.1, 2.11.2, 2.11.3, 2.11.4, 2.11.5, 2.12, 2.12.1, 2.12.2, 2.12.3, 2.13, 2.13.1, 2.13.2, 2.13.3, 2.14, 2.14.1, 2.14.2, 2.16, 3 (heading only), (3.3, Table 3.2 as it applies to PM_{10}), 3.5, 3.7, 3.8, 3.8.1, 3.8.2, 3.8.3, 3.8.4, 3.8.5, 3.8.6, 3.8.7, 3.8.8, 3.9, 4 (heading only), (4.3, Table 4.1 as it applies to PM_{10}), 4.5, 4.6, 4.7, 5 (heading only), (5.3, Table 5.3 as it applies to PM_{10}), 5.5, 5.9, 5.9.1, 5.9.2, 5.9.3, 5.9.4, 5.9.5, 5.9.6, 5.9.7, 5.9.8, 5.9.9, 5.10, 5.11, 6 (heading only), 6.3, Table 6.1, 6.5, 6.6, 6.7, 6.7.1, 6.7.2, 6.8, 7 (heading only), 7.3, Table 7.1 as it applies to PM_{10}, 7.5, 7.7, 7.7.1, 7.7.2, 7.8, 8 (heading only), 8.3, Table 8.1, 8.5, 8.7, 8.7.1, 8.7.2, 8.8, 9 (heading only), 9.3, Table 9.1, 9.5, 9.7, 9.7.1, 9.7.2, 9.8, 10 (heading only), 10.3, Table 10.1, 10.6, 10.8, 10.8.1, 10.8.2, 10.9, 11 (heading only), 11.3, Table 11.2, 11.6, 11.8, 11.8.1, 11.8.2, 11.9, 12 (heading only), 12.3, Table 12.1, 12.5, 12.7, 12.7.1, 12.7.2, 12.8, 13 (heading only), 13.1 (except as it applies to condition 13.3, 13.3.1, 13.3.2, 13.5, 13.5.1, 13.5.2, 13.5.3, 13.6, 13.6.1, 13.6.2 and 13.9), Table 13.1 (except conditions 13.3, 13.5 and 13.6), (13.2, Table 13.2 as it applies to PM_{10}), 13.2.1, 13.4, 13.4.1, 13.4.2, 13.4.3, 13.7, 13.7.1, 13.7.2, 13.8, 13.8.1, 13.8.2, 13.8.3, 13.10, and 13.11. (Boise/Ada County PM_{10} Maintenance Plan).
Lake Pre-Mix, Sandpoint, Idaho.	777–00182	5/17/1996	6/26/2002, 67 FR 43006	The following conditions for the cement silo vent: 1.1, 2.1.1, 2.1.2, 3.1.1, and 3.1.2. (Sandpoint nonattainment area plan).

EPA APPROVED IDAHO SOURCE-SPECIFIC REQUIREMENTS [1]—Continued

Name of source	Permit No.	State effective date	EPA approval date	Explanation
Interstate Concrete and Asphalt, Sandpoint, Idaho.	017–00048	8/2/1999	6/26/2002, 67 FR 43006	The following conditions: for the asphalt plant, 2.2, 3.1.1, 4.1, 4.1.1, 4.1.2, 4.2.1 (as it applies to the hourly PM_{10} emission limit in Appendix A), 4.2.2, 4.2.2.1, 4.2.2.2, and 4.2.2.3; for the concrete batch plant, 2.1, 3.1.1, 4.1, 4.1.1, and 4.1.2; Appendix A (as it applies to PM_{10} emission rates after 7/1/96) and Appendix B (as it applies after 7/1/96). (Sandpoint nonattainment area plan).
Whiteman Lumber Company, Cataldo, ID.	13–1420–062	7/16/1979 (date issued)	7/28/1982, 47 FR 32530	Silver Valley TSP Nonattainment Area Plan.
Potlatch Corporation, Pulp and Paper Unit, Lewiston, ID.	13–1140–0001–00	7/5/1979 (date issued)	7/28/1982, 47 FR 32530	Lewiston TSP Nonattainment Area Plan.
Potlatch Corporation, Clearwater Unit, Lewiston, ID.	13–1140–0003	7/5/1979 (date issued)	7/28/1982, 47 FR 32530	Lewiston TSP Nonattainment Area Plan.
Coast Trading Company, Inc., Lewiston, ID.	13–1140–0011	6/29/1979 (date issued)	7/28/1982, 47 FR 32530	Lewiston TSP Nonattainment Area Plan.
Lewis-Clark Terminal Association, Lewiston, ID.	13–1140–0010	6/29/1979 (date issued)	7/28/1982, 47 FR 32530	Lewiston TSP Nonattainment Area Plan.
Poe Asphalt, Lewiston, ID	0880–0008	3/1/1976 (effective date)	7/28/1982, 47 FR 32530	Lewiston TSP Nonattainment Area Plan.
FMC Corporation, Pocatello, ID [2].	13–1260–0005	2/26/1980 (date issued)	7/28/1982, 47 FR 32530	Pocatello TSP Nonattainment Area Plan.
J.R. Simplot, Pocatello, ID ...	13–1260–0006–00	3/4/1980 (date issued)	7/28/1982, 47 FR 32530	Pocatello TSP Nonattainment Area Plan.
Idaho Portland Cement Company, Inkom, ID.	13–0080–0004–00	7/18/1979 (date issued)	7/28/1982, 47 FR 32530	Pocatello TSP Nonattainment Area Plan.
J.R. Simplot Company, Conda, ID.	13–0420–0021–00	7/18/1979 (date issued)	7/28/1982, 47 FR 32530	Soda Springs TSP Nonattainment Area Plan.
Beker Industries, Conda, ID	13–0420–0003–00	7/18/1979 (date issued)	7/28/1982, 47 FR 32530	Soda Springs TSP Nonattainment Area Plan.
Monsanto, Soda Springs, ID	13–0420–0001–00	7/18/1979 (date issued)	7/28/1982, 47 FR 32530	Soda Springs TSP Nonattainment Area Plan.
Kerr McGee, Soda Springs, ID.	13–0420–0002–00	7/18/1979 (date issued)	7/28/1982, 47 FR 32530	Soda Springs TSP Nonattainment Area Plan.
J.R. Simplot, Pocatello, Idaho.	Air Pollution Operating Permit No. T1–9507–114–1; Facility Number No. 077–00006	4/5/2004	7/13/2006, 71 FR 39574	The following conditions: Cover page, facility identification information only, #300 Sulfuric Acid Plant, Permit Conditions 16.1, 16.10, 16.11, #400 Sulfuric Acid Plant, Permit Condition 17.1, 17.7, 17.10, 17.11, Phosphoric acid plant, Permit Condition 12.3, 12.13, Granulation No. 3 Process, Permit Condition 9.2.1, Granulation No. 3 stack, 9.17 (except 9.17.1 through 9.17.6), Reclaim Cooling Towers, Permit Condition 14.2, 14.6.1, Babcock & Wilcox Boiler, Permit Condition 6.4, 6.12, HPB&W Boiler, Permit Condition 5.3, 5.13 through 5.18, 5.21.

EPA APPROVED IDAHO SOURCE-SPECIFIC REQUIREMENTS [1]—Continued

Name of source	Permit No.	State effective date	EPA approval date	Explanation
J.R. Simplot, Pocatello, Idaho.	Compliance Agreement & Voluntary Order Idaho Code 39–116A	4/16/2004	7/13/2006, 71 FR 39574	The following conditions: No. 300 Sulfuric Acid Plant; Condition 8 and 9. No. 400 Sulfuric Acid Plant; Condition 10, 11, and 12. Granulation No. 1 Plant; Condition 14. Granulation No. 2 Plant; Condition 15. Compliance and Performance Testing; Condition 16.
The Amalgamated Sugar Company LLC—Nampa Factory, Nampa, Idaho.	T2–2009.0105	12/23/2011 (date issued)	4/28/2014, 79 FR 23273	The following conditions: 1.2, including the table of Regulated Emission Point Sources Table, 3.2, 3.3 (first paragraph only), 3.4, 3.5, 3.6, 3.7, 3.8, 3.9, 3.11, 3.13, 3.14, 3.15, 3.16, and 4.1.
P4 Production, L.L.C., Soda Springs, Idaho.	T2–2009.0109	11/17/2009 (date issued)	6/22/2011, 76 FR 36329	The following conditions: 1.2 (including Table 1.1), 2.3, 2.4, 2.5, 2.6, 2.7, and 2.8. (Regional Haze SIP Revision).

[1] EPA does not have the authority to remove these source-specific requirements in the absence of a demonstration that their removal would not interfere with attainment or maintenance of the NAAQS, violate any prevention of significant deterioration increment or result in visibility impairment. Idaho Department of Environmental Quality may request removal by submitting such a demonstration to EPA as a SIP revision.

[2] Only a small portion of this facility is located on State lands. The vast majority of the facility is located in Indian Country. It is EPA's position that unless EPA has explicitly approved a program as applying in Indian country, State or local regulations or permits are not effective within the boundaries of that Indian country land for purposes of complying with the CAA. 68 FR 2217, 2220 (January 16, 2003).

(e) *EPA Approved Nonregulatory provisions and Quasi-Regulatory Measures.*

EPA-APPROVED IDAHO NONREGULATORY PROVISIONS AND QUASI-REGULATORY MEASURES

Name of SIP provision	Applicable geographic or nonattainment area	State submittal date	EPA approval date	Comments
Chapter I—Introduction ...	State-wide	1/15/1980	7/28/1982, 47 FR 32530.	
Chapter II—Administration.	State-wide	1/15/1980	7/28/1982, 47 FR 32530.	
Chapter III—Emission Inventory.	State-wide	1/15/1980, 2/14/1980	7/28/1982, 47 FR 32530.	
Chapter IV—Air Quality Monitoring.	State-wide	1/15/1980	7/28/1982, 47 FR 32530.	
Chapter V—Source Surveillance.	State-wide	1/15/1980	7/28/1982, 47 FR 32530.	
Chapter VI—Emergency Episode Plan.	State-wide	1/15/1980	7/28/1982, 47 FR 32530.	
Chapter VIII—Nonattainment Area Plans				
Chapter VIII-a	Silver Valley TSP Nonattainment Area Plan.	1/15/1980	7/28/1982, 47 FR 32530.	
Chapter VIII-b	Lewiston TSP Nonattainment Area Plan.	1/15/1980, 12/4/1980, and 2/5/1981.	7/28/1982, 47 FR 32530.	
Chapter VIII-c	Transportation Control Plan for carbon monoxide, Ada County.	5/24/1984, 1/3/1985, 3/25/1985, and 6/29/1994.	7/28/1982, 47 FR 32530, 6/6/1985, 50 FR 23810, and 12/1/1994, 59 FR 61546.	
Chapter VIII-d	Pocatello TSP Nonattainment Area Plan.	3/7/1980 and 2/5/1981.	7/28/1982, 47 FR 32530.	
Chapter VIII-e	Soda Springs TSP Nonattainment Area Plan.	1/15/1980	7/28/1982, 47 FR 32530.	
Chapter VIII-f	Pinehurst PM–10 Nonattainment Area Plan.	4/14/1992	8/25/1994, 59 FR 43745.	
Chapter VIII-g	Northern Ada County PM10 Nonattainment Area Plan.	11/14/1991, 12/30/1994, and 7/13/1995.	5/30/1996, 61 FR 27019.	
Chapter VIII-h	Sandpoint PM10 Nonattainment Area Plan.	8/16/1996	6/26/2002, 67 FR 43006.	

EPA-APPROVED IDAHO NONREGULATORY PROVISIONS AND QUASI-REGULATORY MEASURES—Continued

Name of SIP provision	Applicable geographic or nonattainment area	State submittal date	EPA approval date	Comments
Chapter VIII-i	Northern Ada County CO Limited Maintenance Plan.	1/17/2002	10/28/2002, 67 FR 65713.	
Chapter VIII-j	Ada County/Boise Idaho PM–10 Maintenance Plan.	9/27/2002, 7/10/2003, and 7/21/2003.	10/27/2003, 68 FR 61106.	
Chapter IX—Reserved.				
Chapter X—Plan for Maintenance of National Ambient Air Quality Standards for Lead.	State-wide	2/3/1984	6/4/1984 (EPA effective date).	
Small Business Assistance Program.	State-wide	1/3/1994	9/19/1994, 59 FR 47801.	
Appendix A—Legal Authority and Other Administrative Matters.	State-wide	1/15/1980	7/28/1982, 47 FR 32530.	
Appendix A.2—Idaho Environmental Protection and Health Act, Idaho Code Section 39–101 et seq.	State-wide	3/15/2001	1/16/2003, 68 FR 2217.	
Four sections of Appendix A.3—Rules and Regulations for Control of Air Pollution in Idaho—that were approved but not incorporated by reference in section (c).	State-wide	5/17/1994	1/16/2003, 68 FR 2217	IDAPA 58.01.01000 (legal authority), 58.01.01002 (written interpretations), 58.01.01003 (administrative appeals), and 58.01.01128 (confidential business information).
Open Burning of Crop Residue State Implementation Plan Revision.	State-wide	5/28/2008	8/1/2008, 73 FR 44915.	
Interstate Transport State Implementation Plan, May 11, 2010 (see comments).	State-wide	6/28/2010	11/26/2010, 75 FR 72705.	For the 1997 8-hour ozone NAAQS and the 1997 $PM_{2.5}$ NAAQS. See docket EPA–R10–OAR–2010–0669.
Regional Haze SIP Revision.	State-wide	10/25/2010	6/22/2011, 76 FR 36329	The portion of the Regional Haze SIP revision relating to BART, the calculation of baseline and natural conditions, and the statewide inventory of emissions of pollutants that are reasonably anticipated to cause or contribute to visibility impairment in any mandatory Class I Federal Area.
Section 110(a)(2) Infrastructure Requirements for the 1997 8-hour Ozone NAAQS.	Statewide	9/15/2008, 6/24/2010	7/17/2012, 77 FR 41916	This action addresses following CAA elements or portions thereof: 110(a)(2)(A), (B), (C), (D)(ii), (E)(i), (E)(iii), (F), (G), (H), (J), (K), (L), and (M).

EPA-APPROVED IDAHO NONREGULATORY PROVISIONS AND QUASI-REGULATORY MEASURES—Continued

Name of SIP provision	Applicable geographic or nonattainment area	State submittal date	EPA approval date	Comments
Northern Ada County Air Quality Maintenance Area Second 10-year Carbon Monoxide Limited Maintenance Plan.	State-wide	2/10/2011	8/2/2012, 77 FR 45962.	
Regional Haze SIP Revision.	State-wide	10/25/2010	11/8/2012, 77 FR 66929	The remaining portion of the regional haze SIP elements as proposed in the May 22, 2012 notice. 77 FR 30248.
Sandpoint PM_{10} Nonattainment Area Limited Maintenance Plan.	Bonner County: Sandpoint Area.	12/14/2011	4/3/2013, 78 FR 20001	
Idaho State Board SIP Revision; Executive Order 2013–06; dated June 26, 2013.	State-wide	9/16/2013	10/24/2013, 78 FR 63394.	To satisfy the requirements of CAA section 128(a)(1) and CAA section 110(a)(2)(E)(ii) for all criteria pollutants. Renewed on December 14, 2016, expiring December 14, 2020, unless renewed by subsequent Executive Order. *See* Executive Order 2016–07.
Idaho State Board SIP Revision; Idaho Code §§ 59–701 through 705; Ethics in Government Act.	Statewide	9/16/2013	10/24/2013, 78 FR 63394.	To satisfy the requirements of CAA section 128(a)(2) and CAA section 110(a)(2)(E)(ii) for all criteria pollutants.
Idaho Department of Environmental Quality letter dated October 18, 2013 supplementing the May 9, 2013 SIP Submittal.	State-wide	10/24/2013	3/3/2014, 79 FR 11711.	
Letter of Intent PM 2.5 Reduction, Franklin County Road Department to Department of Environmental Quality (Voluntary Measure).	Franklin County, Logan UT–ID $PM_{2.5}$ Nonattainment Area.	12/19/2012	3/25/2014, 79 FR 16201	Fine Particulate Matter Control Measures; Franklin County.
Road Sanding Agreement, Idaho Transportation Department to Idaho Department of Environmental Quality (Voluntary Measure).	Franklin County, Logan UT–ID $PM_{2.5}$ Nonattainment Area.	12/19/2012	3/25/2014, 79 FR 16201	Fine Particulate Matter Control Measures; Franklin County.
Regional Haze SIP Revision.	State-wide	6/29/2012	4/28/2014, 79 FR 23273	The portion of the Regional Haze SIP relating to BART for the TASCO, Nampa facility,
Section 110(a)(2) Infrastructure Requirements for the 2008 Pb NAAQS.	State-wide	2/14/2012	5/22/2014, 79 FR 29358	This action addresses the following CAA elements: 110(a)(2)(A), (B), (C), (D), (E), (F), (G), (H), (J), (K), (L), and (M).

EPA-APPROVED IDAHO NONREGULATORY PROVISIONS AND QUASI-REGULATORY MEASURES—Continued

Name of SIP provision	Applicable geographic or nonattainment area	State submittal date	EPA approval date	Comments
Section 110(a)(2) Infrastructure Requirements for the 1997 $PM_{2.5}$ NAAQS.	State-wide	9/15/2008; 6/28/2010	7/14/2014, 79 FR 40662	This action addresses the following CAA elements or portions thereof: 110(a)(2)(A), (B), (C), (D)(ii), (E), (F), (G), (H), (J), (K), (L), and (M).
Section 110(a)(2) Infrastructure Requirements for the 2006 $PM_{2.5}$ NAAQS.	State-wide	6/28/2010; 8/10/2011	7/14/2014, 79 FR 40662	This action addresses the following CAA elements or portions thereof: 110(a)(2)(A), (B), (C), (D)(i)(II), (D)(ii), (E), (F), (G), (H), (J), (K), (L), and (M).
Section 110(a)(2) Infrastructure Requirements for the 2008 Ozone NAAQS.	State-wide	6/28/2010	7/14/2014, 79 FR 40662	This action addresses the following CAA elements or portions thereof: 110(a)(2)(A), (B), (C), (D)(i)(II), (D)(ii), (E), (F), (G), (H), (J), (K), (L), and (M).
Fine Particulate Matter Baseline Emissions Inventory.	Franklin County, Logan UT–ID $PM_{2.5}$ Nonattainment Area.	12/19/2012	7/18/2014, 79 FR 41904	Fine Particulate Matter; Franklin County.
Section 110(a)(2) Infrastructure Requirements for the 2010 NO_2 NAAQS.	State-wide	9/16/2013	8/11/2014, 79 FR 46708	This action addresses the following CAA elements or portions thereof: 110(a)(2)(A), (B), (C), (D)(i)(II), (D)(ii), (E), (F), (G), (H), (J), (K), (L), and (M).
Section 110(a)(2) Infrastructure Requirements for the 2010 SO_2 NAAQS.	State-wide	9/16/2013	8/11/2014, 79 FR 46708	This action addresses the following CAA elements or portions thereof: 110(a)(2)(A), (B), (C), (D)(i)(II), (D)(ii), (E), (F), (G), (H), (J), (K), (L), and (M).
Portneuf Valley PM_{10} Nonattainment Area Plan and Maintenance Plan	Portneuf Valley	7/13/2006	71 FR 39574.	
Portneuf Valley PM_{10} Maintenance Plan—Revision.	Portneuf Valley	4/21/2014	7/17/2014, 79 FR 41647	
Northern Ada County PM_{10} Second Ten-Year Maintenance Plan.	Northern Ada County	3/11/2013	10/2/2014, 79 FR 59435.	
Pinehurst PM_{10} Contingency Measures.	Pinehurst/Shoshone County.	7/13/1995	10/2/2014, 79 FR 59435.	
Interstate Transport Requirements for the 2006 24-hour $PM_{2.5}$ NAAQS.	State-wide	6/28/2010	4/17/2015, 80 FR 21181	This action addresses the following CAA elements: 110(a)(2)(D)(i)(I).
Interstate Transport Requirements for the 2008 Ozone NAAQS.	State-wide	6/28/2010	12/18/2015, 80 FR 78981.	This action addresses the following CAA elements: 110(a)(2)(D)(i)(I).

EPA-APPROVED IDAHO NONREGULATORY PROVISIONS AND QUASI-REGULATORY MEASURES—Continued

Name of SIP provision	Applicable geographic or nonattainment area	State submittal date	EPA approval date	Comments
Interstate Transport Requirements for the 2010 NO_2 NAAQS.	State-wide	12/24/2015	5/5/2016, 81 FR 27017	This action addresses the following CAA elements: 110(a)(2)(D)(i)(I).
Fine Particulate Matter Attainment Plan.	Franklin County, Logan UT–ID $PM_{2.5}$ Nonattainment Area.	12/19/2012; 12/24/2014	1/4/2017, 82 FR 729	*Approved:* reasonably available control measures and reasonably available control technology requirements. *Disapproved:* contingency measures. *Deferred:* Moderate area attainment demonstration, reasonable further progress, quantitative milestone, and year motor vehicle emissions budget requirements.
Fine Particulate Matter Attainment Plan.	Franklin County, Logan UT–ID $PM_{2.5}$ Nonattainment Area.	12/19/2012; 12/24/2014.	8/8/2017, 82 FR 37025	*Approved:* moderate area attainment demonstration and 2014 reasonable further progress motor vehicle emissions budgets. *Conditional Approval:* reasonable further progress, quantitative milestone, motor vehicle emission budget requirements.
Section 110(a)(2) Infrastructure Requirements—2012 $PM_{2.5}$ NAAQS.	State-wide	12/23/2015	12/4/2017, 82 FR 57132	Approves SIP for purposes of CAA sections 110(a)(2)(A), (B), (C), (D)(i)(II), (D)(ii), (E), (F), (G), (H), (J), (K), (L), and (M) for the 2012 $PM_{2.5}$ NAAQS.

[70 FR 3481, Jan. 25, 2005]

EDITORIAL NOTE: For FEDERAL REGISTER citations affecting § 52.670, see the List of CFR Sections Affected, which appears in the Finding Aids section of the printed volume and at www.fdsys.gov.

EFFECTIVE DATE NOTE: At 83 FR 28385, June 19, 2018, § 52.670 was amended by:

a. In paragraph (c), under table entitled ''EPA Approved Idaho Regulations and Statutes'':

i. Revising entry ''621'';

ii. Removing entry ''Section 1 of House bill 557, codified at Idaho Code Section 39–114''; and

iii. Adding an entry at the end of the table.

b. In paragraph (e), under the table entitled ''EPA-Approved Idaho Nonregulatory Provisions and Quasi-Regulatory Measures'', adding an entry at the end of the table.

The amendments are effective July 19, 2018. For the convenience of the user, the added and revised text is set forth as follows:

§ 52.670 Identification of plan.

* * * * *

(c) * * *

EPA-APPROVED IDAHO REGULATIONS AND STATUTES

State citation	Title/subject	State effective date	EPA approval date	Explanations
Idaho Administrative Procedures Act (IDAPA) 58.01.01—Rules for the Control of Air Pollution in Idaho				
* *	*	*	*	* *
621	Burn Determination	2/28/2018, 4/2/2008	6/19/2018, 83 FR 28382; 8/1/2008, 73 FR 44915.	
* *	*	*	*	* *
State Statutes				
Section 3 of Senate Bill 1009, codified at Idaho Code Section 39–114.	Open Burning of Crop Residue.	2/28/2018	6/19/2018, 83 FR 28382.	

* * * * *

(e) * * *

EPA-APPROVED IDAHO NONREGULATORY PROVISIONS AND QUASI-REGULATORY MEASURES

Name of SIP provision	Applicable geographic or nonattainment area	State submittal date	EPA approval date	Comments
* *	*	*	*	* *
Open Burning of Crop Residue State Implementation Plan Revisions.	State-wide	9/22/2017, 10/23/2017	6/19/2018, 83 FR 28382.	Original submission and supplemental modeling analyses

* * * * *

§ 52.671 Classification of regions.

The Idaho plan was evaluated on the basis of the following classifications:

Air quality control region	Pollutants				
	Particulate matter	Sulfur oxides	Nitrogen dioxide	Carbon monoxide	Ozone
Eastern Idaho Intrastate	I	II	III	III	III.
Eastern Washington Northern Idaho Interstate (Idaho)	I	II	III	III	III.
Idaho Intrastate	I	III	III	III	III.
Metropolitan Boise Intrastate	II	III	III	I	III.

[37 FR 10861, May 31, 1972, as amended at 45 FR 70261, Oct. 23, 1980; 47 FR 32534, July 28, 1982]

§ 52.672 Approval of plans.

(a) *Carbon Monoxide*. (1) EPA approves as a revision to the Idaho State Implementation Plan, the Limited Maintenance Plan for the Northern Ada County Carbon Monoxide Not-Classified Nonattainment Area, submitted by the State on January 17, 2002.

(2) EPA approves as a revision to the Idaho State Implementation Plan, the Northern Ada County Air Quality Maintenance Area Second 10-year Carbon Monoxide Limited Maintenance Plan submitted by the State on February 10, 2011.

(b) *Lead*. [Reserved]

(c) *Nitrogen Dioxide*. [Reserved]

(d) *Ozone*. [Reserved]

(e) *Particulate Matter*. (1) EPA approves as a revision to the Idaho State Implementation Plan, the Northern Ada County PM_{10} SIP Maintenance

Plan, adopted by the State on September 26, 2002.

(2) EPA approves as a revision to the Idaho State Implementation Plan, the Northern Ada County PM_{10} Second Ten-Year Maintenance Plan adopted by the State on March 11, 2013.

(3) EPA approves as a revision to the Idaho State Implementation Plan, the Pinehurst PM_{10} Contingency Measures, adopted by the State on July 13, 1995.

(f) *Sulfur Dioxide*. [Reserved]

(g) *Visibility protection*. (1) EPA approves portions of a Regional Haze SIP revision submitted by the Idaho Department of Environmental Quality on October 25, 2010, as meeting the requirements of Clean Air Act section 169A and 40 CFR 51.308(e) regarding Best Available Retrofit Technology. The SIP revision also meets the requirements of 40 CFR 51.308(d)(2) and (4)(v) regarding the calculation of baseline and natural conditions for Craters of the Moon National Monument, Sawtooth Wilderness Area, and Selway-Bitterroot Wilderness Area and the statewide inventory of emissions of pollutants that are reasonably anticipated to cause or contribute to visibility impairment in any mandatory Class I Federal Area. The SIP revision also meets the requirements of Clean Air Act section 110(a)(2)(D)(i)(II) as it applies to visibility for the 1997 8-hour ozone NAAQS and 1997 PM2.5 NAAQS.

(2) EPA approves the remaining portions of the Regional Haze SIP revision submitted by the Idaho Department of Environmental Quality on October 25, 2010, as meeting the requirements of the Clean Air Act section 169A and 169B and 40 CFR 51.308.

(3) The EPA is vacating its approval of Idaho's NO_X and SO_X BART determination for the Riley boiler at The Amalgamated Sugar Company, LLC Nampa facility, published June 22, 2011.

(4) The EPA approves a Regional Haze SIP revision submitted by the Idaho Department of Environmental Quality on June 29, 2012, as meeting the requirements of Clean Air Act section 169A and 40 CFR 51.308(e) regarding Best Available Retrofit Technology for The Amalgamated Sugar Company LLC, facility located in Nampa, Idaho. The EPA is approving a revised NO_X BART determination and revised emission limit for NO_X, a revised emission limit for PM, and a SO_2 BART Alternative for The Amalgamated Sugar Company, LLC, Nampa facility.

[67 FR 65718, Oct. 28, 2002, as amended at 68 FR 61110, Oct. 27, 2003; 76 FR 36339, June 22, 2011; 77 FR 45965, Aug. 2, 2012; 77 FR 66934, Nov. 8, 2012; 79 FR 23278, Apr. 28, 2014; 79 FR 41649, July 17, 2014; 79 FR 59438, Oct. 2, 2014]

§ 52.673 Approval status.

With the exceptions set forth in this subpart, the Administrator approves Idaho's plan for the attainment and maintenance of the national standards.

§ 52.674 [Reserved]

§ 52.675 Control strategy: Sulfur oxides—Eastern Idaho Intrastate Air Quality Control Region.

(a)(1) Regulation R of the Rules and Regulations for the Control of Air Pollution in Idaho, which is part of the sulfur dioxide (SO_2) control strategy, is disapproved since it is inconsistent with the purposes and provisions of subpart G of this chapter. These requirements are not met by Regulation R in that the SO_2 control strategy contained therein is not adequate for the attainment and maintenance of SO_2 national ambient air quality standards (NAAQS).

(2) Rules 1–1801 through 1–1804 (Rules for Control of Sulfur Oxide Emissions from Sulfuric Acid Plants) of the ''Rules and Regulations for the Control of Air Pollution in Idaho'' are inadequate to ensure attainment and maintenance of Sulfur Dioxide National Ambient Air Quality Standards in the Eastern Idaho Intrastate Air Quality Control Region. Special limits have previously been established for certain existing acid plants in this Air Quality Control Region (§§ 52.670(c)(15) and 52.675(b)). Therefore, Rules 1–1801 through 1–1804 are approved except as they apply to existing acid plants with approved or promulgated emission limits that are more stringent than the limit found in 1–1802.

(b) Regulation for control of sulfur dioxide (SO_2) emissions: Sulfuric Acid Plants. (1) The provisions of this paragraph shall apply to the owner(s) and operator(s) of The J. R. Simplot Company's Minerals and Chemical Division,

located in Power County, Idaho, in the Eastern Idaho Intrastate Air Quality Control Region.

(2) The owner(s) and operator(s) of The J. R. Simplot Company facility shall utilize best engineering techniques in the operation of their plant to prevent fugitive SO losses. Such techniques shall include but are not limited to:

(i) Operating and maintaining all conducts, flues, and stacks in a leakfree condition.

(ii) Operating and maintaining all process equipment and gas collection systems in such a fashion that leakage of SO_2 gases will be prevented to the maximum extent possible.

(3) The owner(s) and operator(s) of The J. R. Simplot Company facility shall limit SO_2 emissions from their sulfuric acid plants per the following:

(i) The combined SO_2 emissions from the designated 100 and 200 sulfric acid plants shall not exceed 2 kilograms (kg) per metric ton (4 pounds per ton) of 100 percent sulfuric acid produced.

(ii) The SO_2 emissions from the designated 300 sulfuric acid plant and stack shall not exceed 994 kg per hour (2190 pounds per hour).

(4) (i) The owner(s) and operator(s) of The J. R. Simplot Company shall achieve compliance with the requirements specified in paragraphs (b)(2) and (b)(3) of this section in accordance with the following schedule:

(A) Advise EPA as to status of contract(s) and construction schedules for pollution abatement projects within 30 days of the effective date of this regulation.

(B) Attain final compliance by July 31, 1976.

(ii) A performance test of the 300 acid plant shall be necessary to determine whether compliance has been achieved with the requirements of paragraph (b)(3) of this section. Such test must be completed within 15 days of the final compliance date specified in paragraph (b)(4)(i) of this section. Notice must be given to the Administrator at least 10 days prior to such a test to afford him an opportunity to have an observer present.

(iii) Within 60 days after achieving the maximum production rate at which the 100 and 200 acid plant will be operated, but not later than 180 days after initial start-up of these plants and at such other times as may be required by the Administrator under section 114 of the Clean Air Act, the owner(s) and operator(s) of the facility shall conduct performance test(s) in accordance with the requirements of 40 CFR 60.8.

(iv) If the owner(s) and operator(s) of the J. R. Simplot Company facility are presently in compliance with the requirements of paragraphs (b)(2) and (b)(3) of this section or in compliance with a portion of these requirements, such compliance shall be certified to the Administrator within 15 days following the date of the publication of these requirements as a final regulation in the FEDERAL REGISTER. If the owner(s) or operator(s) of The J. R. Simplot Company achieve compliance prior to July 31, 1976, such compliance shall be certified to the Administrator within 15 days of the date of achieving compliance. The Administrator may request whatever supporting information he considers necessary to determine the validity of the certification.

(5) (i) By no later than September 30, 1976, the owner(s) and operator(s) of The J. R. Simplot Company facility shall install, calibrate, maintain and operate measurement system(s) for:

(A) Continuously monitoring and recording SO_2 concentration rates in each sulfuric acid plant discharge stack per the requirements of 40 CFR 60.13 and 60.84.

(B) Continuously monitoring and recording gas volumetric flow rates in the exhaust stack of the designated 300 sulfuric acid plant.

(ii) By no later than October 30, 1976, and at such other times following that date as the Administrator may specify, the SO_2 concentration measurement system(s) and stack gas volumetric flow rate system(s) installed and used pursuant to this paragraph shall be demonstrated to meet the measurement system performance specifications prescribed in 40 CFR 60.13 and Appendix E to this part, respectively. The Administrator shall be notified at least 10 days prior to the start of this field test period to afford the Administrator the opportunity to have an observer present.

(iii) The sampling point for monitoring the concentration of SO_2 emissions shall be in the duct at the centroid of the cross section of the discharge stack if the cross sectional area is less than 4.65 m^2 (50 ft^2) or at a point no closer to the wall than 0.91 m (3 ft) if the cross sectional area is 4.65 m^2 (50 ft^2) or more. The monitor sample point shall be representative of the average concentration in the duct.

(iv) The measurement system(s) shall be maintained, operated and calibrated in accordance with the methods prescribed by the manufacturers. Records of maintenance and/or calibration shall be kept and submitted to the Administrator upon request. These records shall clearly show instrument readings before and after such calibration and/or maintenance.

(v) The owner(s) and operator(s) of The J. R. Simplot Company facility shall maintain a daily record of three hour average emission rate measurements for each sulfuric acid plant. Three hour average emission rates shall be calculated for each day beginning at midnight. For the 100 and 200 acid plants, the calculations shall be in conformance with 40 CFR 60.84. For the 300 acid plant, average SO_2 emission rates expressed in kg SO_2 per hour shall be calculated. The results of these calculations for each month shall be submitted to the Administrator within 15 days following the end of each month. Such submission shall identify each period of excess emissions that occurred and the nature and cause of any malfunction (if known), the corrective action taken or preventative measures adopted. The records of such measurements including strip charts and other appropriate raw data shall be retained for a minimum of two years following the date of such measurements.

(vi) The continuous monitoring and recordkeeping requirements of paragraph (b)(5) of this section shall become applicable September 30, 1976.

(6)(i) Compliance with the requirements set forth in paragraph (b)(3) of this section shall be determined using the emission rates measured by the continuous measurement system(s) installed, calibrated, maintained and operated in accordance with the requirements of paragraph (b)(5) of this section.

(ii) At the Administrator's discretion, compliance may also be determined using the manual source test methods per 40 CFR 60.85 and Appendix A to part 60 of this title. Emission rates for each stack shall be expressed in units consistent with those in paragraph (b)(3) of this section.

(iii) A violation of the requirements of paragraph (b)(3) of this section shall occur whenever the SO_2 emission rates determined according to paragraph (b)(6)(i) or (b)(6)(ii) of this section exceed the corresponding SO_2 emission rates specified in paragraph (b)(3) of this section.

(7) The owner(s) and operator(s) of The J. R. Simplot Company facility shall by September 30, 1976, install, calibrate, maintain and operate a network for continuously monitoring ground level ambient SO_2 concentrations and wind speed and direction.

(i) The monitoring network shall consist of at least four ambient SO_2 monitoring stations and one meteorological station placed at locations approved by the Administrator.

(ii) The SO_2 monitoring network shall be consistent with automated equivalent methods for measurement of ambient concentrations of SO_2 as defined in part 53 of this chapter.

(iii) The monitoring network installed and used pursuant to this subparagraph shall be maintained, operated and calibrated in accordance with the methods prescribed by the manufacturers. Records of maintenance and/or calibration shall be kept and submitted to the Administrator upon request. These records shall clearly show instrument readings before and after such calibration and/or maintenance.

(iv) The owner(s) and operator(s) of The J. R. Simplot Company facility shall maintain a daily record of all measurements required by this subparagraph. Strip charts and other raw data from the monitoring network shall be retained for a minimum of two years following the date of such measurement.

(v) The owner(s) and operator(s) of The J. R. Simplot Company shall calculate hourly average ambient SO_2 concentrations, wind speed, and wind

direction from each monitoring station and submit such values to the Administrator within 15 days following the end of each month.

(vi) The continuous monitoring and recordkeeping requirements of paragraph (b)(7) of this section shall become applicable September 30, 1976 and shall remain applicable until such time as the Administrator declares that an adequate ambient air data base has been established, which shall be no earlier than at least one calendar year.

(vii) Within 90 days of the Administrator's declaration of an adequate data base, Simplot shall submit to the Administrator a technical analysis of the degree of permanent control required on the 300 acid plant to ensure attainment and maintenance of NAAQS.

(8) Nothing in paragraph (b) of this section shall be construed to relieve the owner(s) and operator(s) of The J. R. Simplot Company to comply with any applicable requirements of part 60 of this title. In the event of conflicting requirements or interpretations between part 60 of this title and this paragraph, the more restrictive interpretation or requirement shall apply.

(9) In the event that measurement systems cannot be installed and operational by the date specified in this section, The J. R. Simplot Company shall propose the earliest possible date by which such requirements can be met. Such proposal shall include adequate justification and supporting documentation.

[41 FR 23202, June 9, 1976, as amended at 47 FR 32534, July 28, 1982; 51 FR 40676, Nov. 7, 1986]

§ 52.676 [Reserved]

§ 52.677 Original identification of plan section.

(a) This section identifies the original ''Idaho Air Quality Implementation Plan'' and all revisions submitted by Idaho that were federally approved prior to November 12, 2004.

(b) The plan was officially submitted on January 31, 1972.

(c) The plan revisions listed below were submitted on the dates specified.

(1) Miscellaneous additions (compliance schedules and non-regulatory provisions) to the plan submitted on February 23, 1972, by the Idaho Air Pollution Control Commission.

(2) Request for delegation of legal authority submitted on March 2, 1972, by the Governor.

(3) Compliance schedules submitted on April 12, 1972, by the Governor.

(4) Request for an 18-month extension for particulate matter in all AQCR's submitted on May 5, 1972, by the Governor.

(5) Miscellaneous additions (Non-regulatory) to the plan submitted on May 26, 1972, by the Idaho Air Pollution Control Commission.

(6) Appendices D and E of the plan submitted on June 9, 1972, by the Governor.

(7) Revisions to the Rules and Regulations for the Control of Air Pollution in Idaho submitted on February 15, 1973, by the Governor.

(8) Compliance schedules submitted on July 23, 1973, by the Governor.

(9) Amendment to Chapter IX of the plan to provide for review of indirect sources and a new Chapter XIV which sets forth the control strategy for attaining secondary particulate matter standards on October 16, 1973, by the Governor.

(10) Revisions to 1972 Session Laws, Chapter 347; 1973 Session Laws, Chapter 87, 136, 137, 138, 139, and 143; Chapters 18 and 52, Idaho Code; and the accompanying Attorney General's opinion submitted August 15, 1973, by the Governor.

(11) A new section 4 of Regulation A (General Provisions) and revised Regulation T (Air Pollution Sources Permits) of the Rules and Regulations for the Control of Air Pollution in Idaho (Chapter VII of the plan), an addition to Chapter XI of the plan to include administrative procedures for indirect source review, and compliance schedules submitted on July 1, 1974, by the Governor.

(12) Air quality maintenance area designation submitted on June 11, 1974, by the Idaho Department of Environmental and Community Services.

(13) An amendment to Regulation C (Ambient Air Quality Standards) and Regulation S (Control of Sulfur Oxide Emissions from Combined Lead/Zinc Smelters) of the Rules and Regulations

for the Control of Air Pollution in Idaho and revisions to Chapter IV and Appendix F of the Implementation Plan submitted on January 10, 1975, by the Governor.

(14) Revised sections 2 and 6 of Regulation A (General Provisions) of the Rules and Regulations for the Control of Air Pollution in Idaho submitted on January 24, 1975, by the Governor.

(15) Consent Order for Beker Industries submitted on July 28, 1975 by the Governor.

(16) On January 15, 1980 the Governor submitted the transportation portion of the Boise-Ada County carbon monoxide plan.

(17) On July 1, 1980 the Governor submitted a SIP revision containing a variance from the indirect source regulation for an urban renewal project located in downtown Boise, as well as an adjustment to the TCP which had been submitted to EPA in January 1980.

(18) On February 14, 1980 the State of Idaho Department of Health and Welfare submitted a plan revision to meet the requirements of Air Quality Monitoring 40 CFR part 58, subpart C, § 58.20.

(19) Revisions to the ''Implementation Plan for the Control of Air Pollution in the State of Idaho'' submitted by the Governor of Idaho on January 15, 1980: Chapter I ''Introduction;'' Chapter II ''General Administration;'' Chapter III ''Emissions Inventory;'' Chapter IV ''Air Quality Monitoring;'' Chapter V ''Source Surveillance;'' Chapter VI ''Emergency Episode Plan;'' Chapter VII ''Approval Procedures for New and Modified Sources;'' Chapter VIII ''Non-Attainment Area Plans;'' Chapter VIII-a ''Silver Valley Non-Attainment Plan;'' Chapter VIII-e ''Soda Springs Non-Attainment Plan;'' Appendix A.2 Legal Authority (Section 39–100, *Idaho Code);* Appendix A.3, Title I, Chapter I, Rules and Regulations for the Control of Air Pollution in Idaho, except indirect source review provisions (1–1002.37, 1–1002.76 and 1–1004), variance provisions (1–1007 and 1–1904) and ''Sulfur Dioxide Emission Limitations for Combined Zinc and Lead Smelters'' (1–1851 through 1–1868); Appendix B ''Emission Inventory, Ada County Carbon Monoxide Non-Attainment Area;'' Appendix G ''Permits—Silver Valley'' (six permits); and Appendix K ''Permits—Soda Springs'' (four permits).

(20) Chapter VIII-b ''Lewiston Non-Attainment Plan'' submitted by the Governor of Idaho on January 15, 1980. On December 4, 1980, the Governor submitted revised pages 31–39, an operating permit for a kraft pulp and paper mill (Appendix H.1), operating permits for two grain loading terminals (Appendices H.3 and H.4), and an operating permit for an asphalt plant (Appendix H.5). On February 5, 1981 the Governor further revised the nonattainment area plan by submitting a permit for a wood products operation (Appendix H.2).

(21) Chapter VIII-d ''Pocatello TSP Non-Attainment Plan'' submitted by the Governor of Idaho on March 7, 1980. This submittal included operating permits for an elemental phosphorus plant (Appendix J.1), a phosphate fertilizer manufacturing plant (Appendix J.2), and a Portland cement plant (Appendix J.3). On February 5, 1981, the Governor submitted a revised Chapter VIII-d.

(22) On February 3, 1984 the State of Idaho Department of Health and Welfare submitted a revision to add a lead maintenance strategy to the Idaho Implementation Plan.

(23) On May 29, 1984, the State of Idaho Department of Health and Welfare submitted the Boise-Ada County carbon monoxide attainment plan as an official State Implementation Plan revision. The submittal was then supplemented on January 3, 1985.

(24) A revised Chapter VII *Approval Procedures for New and Modified Facilities;* revised sections 1–1002, 1–1012, 1–1013, 1–1014, and 1–1101 of Appendix A. 3 ''Title 1, Chapter 1, *Rules and Regulations for the Control of Air Pollution in Idaho Manual;''* and the repeal of sections 1–1003, 1–1102 through 1–1112, and 1–1900 through 1–1906 of Appendix A. 3 ''Title 1, Chapter 1, *Rules and Regulations for the Control of Air Pollution in Idaho Manual;''* of the Implementation Plan for the Control of Air Pollution in the State of Idaho, submitted by the Director of the State of Idaho Department of Health and Welfare on April 19, 1985. (Sections 1–1003, 1–1102 through 1–1112, and 1–1900 through 1–1906 of Appendix A. 3 ''Title 1, Chapter 1, *Rules and Regulations for the Control of Air*

Pollution in Idaho Manual'' were previously approved by EPA at 40 CFR 52.670(c)(19).) An April 3, 1986, commitment letter from the Director of the State of Idaho Department of Health and Welfare regarding stack height provisions.

(i) *Incorporation by reference.* (A) Revised sections 1–1002, 1–1012, 1–1013, 1–1014, and 1–1101 of Appendix A. 3, ''Title 1, Chapter 1, *Rules and Regulations for the Control of Air Pollution in Idaho Manual''* of the Implementation Plan for the Control of Air Pollution in the State of Idaho, as adopted by the Idaho Board of Health and Welfare on November 1, 1984. An April 3, 1986, commitment letter from the Director of the State of Idaho Department of Health and Welfare regarding stack height provisions.

(ii) *Other materials.* (A) Revised Chapter VII *Approval Procedures for New and Modified Facilities* of the Implementation Plan for the Control of Air Pollution in the State of Idaho, submitted by the Director of the Idaho Department of Health and Welfare on April 19, 1985. (This revised chapter replaces an earlier version which was approved by EPA and incorporated by reference at 40 CFR 52.670(c)(19).)

(B) Sections 1–1003, 1–1102 through 1–1112, and 1–1900 through 1–1906 of Appendix A. 3 ''Title 1, Chapter 1, *Rules and Regulations for the Control of Air Pollution in Idaho,''* of the Implementation Plan for the Control of Air Pollution in the State of Idaho, repealed by the Idaho Board of Health and Welfare on November 1, 1984. (These sections, noted as repealed, replace the earlier versions which were approved by EPA and incorporated by reference at 40 CFR 52.670(c)(19).)

(25) On March 27, 1987, the State of Idaho Department of Health and Welfare submitted revised rules regulating the use of stack heights and dispersion techniques (section 16.01.1002.94 and section 16.01.1014) as revisions to the Idaho state implementation plan. Additional revisions included clarifications to section 16.01.1009 (Total Compliance), and section 16.01.1201.03 (Visible Emissions-Exception).

(i) *Incorporation by reference.* (A) March 27, 1987 letter from the State of Idaho Department of Health and Welfare to EPA, Region 10.

(B) Section 16.01.1002.94 (Stack), section 16.01.1014 (Stack Heights and Dispersion Techniques), section 16.01.1009 (Total Compliance) and section 16.01.1201.03 (Visible Emissions-Exception) adopted by the State of Idaho Department of Health and Welfare on February 11, 1987.

(26) On June 15, 1990, the Administrator of the Idaho Department of Health and Welfare submitted amendments to State of Idaho's Rules and Regulations for the Control of Air Pollution in Idaho Manual as revisions to the Idaho state implementation plan as follows: Idaho Administrative Procedures Act, Section 16.01.01002 Definitions, Section 16.01.01012 Procedures and Requirements for Permits to Construct and Operating Permits, and Section 16.01.01101 Air Quality Standards and Area Classification.

(27) On September 4, 1992, the Administrator of the Idaho Department of Health and Welfare submitted a revised and recodified Rules and Regulations for the Control of Air Pollution in Idaho Manual (Idaho Administrative Procedures Act Sections 16.01.01000 through 16.01.01999) as a revision to the Idaho state implementation plan.

(i) *Incorporation by reference.* (A) June 15, 1990, letter from the Administrator of the Idaho Department of Health and Welfare to EPA Region 10 submitting amendments to the Idaho state implementation plan.

(B) September 4, 1992, letter from the Administrator of the Idaho Department of Health and Welfare to EPA Region 10 submitting amendments to the Idaho state implementation plan.

(C) Idaho's Rules and Regulations for the Control of Air Pollution in Idaho Manual (except for sections IDAPA 16.01.01007 Variances, IDAPA 16.01.01853 through 16.01.01856 Combined Zinc and Lead Smelters, IDAPA 16.01.0951 through 16.01.01968 Regulation of Standards of Performance for New Stationary Sources, and IDAPA 16.01.01997 Confidentiality of Records) as adopted by the Board of the Idaho Department of Health and Welfare on July 30, 1992, and effective on August 21, 1992.

(28) On April 14, 1992, the State of Idaho submitted a revision to the SIP

for Pinehurst, ID, for the purpose of bringing about the attainment of the national ambient air quality standards for particulate matter with an aerodynamic diameter less than or equal to a nominal 10 micrometers. This submittal includes an additional area in Shoshone County adjacent to the City of Pinehurst which EPA designated nonattainment and moderate for PM–10 on January 20, 1994.

(i) *Incorporation by reference.* (A) April 7, 1992 letter from Idaho Department of Health and Welfare to EPA Region 10 submitting the Pinehurst Particulate Air Quality Improvement Plan as a revision to the Implementation Plan for the Control of Air Pollution in the State of Idaho. The plan has been adopted in accordance with the authorities and requirements of the Federal Clean Air Act and the Idaho Environmental Protection and Health Act (Idaho Code section 39–10/*et seq*).

(B) SIP revision for Pinehurst Particulate Air Quality Improvement Plan, February 5, 1992 (adopted on April 7, 1992).

(29) On June 29, 1994, the Idaho Department of Health and Welfare submitted a CO State Implementation Plan for Northern Ada County, Idaho.

(i) *Incorporation by reference.* (A) June 29, 1994 letter from Idaho Department of Health and Welfare to EPA Region 10 submitting the CO SIP for Northern Ada County, Idaho.

(B) Minor Revision of the Northern Ada County, Idaho 1984 State Implementation Plan for CO, June 1994 (including Ada County Ordinance 228, City of Boise Ordinance 5273, City of Meridian Ordinance 547, City of Garden City Ordinance 558, and City of Eagle Ordinance 177), as adopted by the Idaho Department of Health and Welfare on June 28, 1994.

(30) On January 7, 1994, the Administrator for the Idaho Department of Health and Welfare, Division of Environmental Quality, submitted the State PROGRAM as a revision to the Idaho SIP.

(i) *Incorporation by reference.* (A) The January 3, 1994 letter from the Administrator of the Idaho Department of Health and Welfare, Division of Environmental Quality, submitting the PROGRAM to EPA.

(B) The State Implementation Plan Revision to Establish a State Small Business Stationary Source Technical and Environmental Compliance Assistance Program (which includes the text of Idaho Code 39–118E, Small Business Assistance, signed into law Senate bill 1236 by Idaho Governor, Cecil D. Andrus, on March 29, 1993), dated December 29, 1993, and adopted on January 3, 1994.

(31) On November 14, 1991, and on December 30, 1994, the Idaho Department of Health and Welfare (IDHW) submitted revisions to the Idaho State Implementation Plan (SIP) for the Northern Ada County/Boise Particulate (PM_{10}) Air Quality Improvement Plan.

(i) *Incorporation by reference.* (A) November 14, 1991, letter from the IDHW Administrator to the EPA Region 10 Regional Administrator submitting a revision to the Idaho SIP for the Northern Ada County/Boise Particulate Air Quality Improvement Plan; The Northern Ada County Boise Particulate (PM_{10}) Air Quality Improvement Plan adopted on November 14, 1991.

(B) December 30, 1994, letter from the IDHW Administrator to the EPA Region 10 Regional Administrator including a revision to the Idaho SIP for the Northern Ada County/Boise PM_{10} Air Quality Improvement Plan; Appendix C–1, Supplemental Control Strategy Documentation, Northern Ada County/Boise PM_{10} Air Quality Improvement Plan, adopted December 30, 1994, with the following attachments: Garden City Ordinances #514 (May 14, 1987), #533 (January 10, 1989) and #624 (September 13, 1994); Meridian Ordinance #667 (August 16, 1994); Eagle Ordinance #245 (April 26, 1994); Ada County Ordinance #254 (November 3, 1992); and Table Ordinance-1 (December 30, 1994).

(32) On December 6, 2000, the Idaho Department of Environmental Quality submitted amendments to State of Idaho's Rules and Regulations for the Control of Air Pollution in Idaho as revisions to the Idaho state implementation plan as follows: sections 58.01.01.563 through 58.01.01.574.

(i) *Incorporation by reference.* (A) Section 58.01.01.563 Transportation Conformity, Section 58.01.01.564 Incorporation by Reference, Section 58.01.01.565

Abbreviations, Section 58.01.01.566 Definitions for the Purpose of Sections 563 Through 574 and 582, Section 58.01.01.567 Agencies Affected by Consultation, Section 58.01.01.568 ICC Member Roles in Consultation, Section 58.01.01.569 ICC Member Responsibilities in Consultation, Section 58.01.01.570 General Consultation Process, Section 58.01.01.571 Consultation Procedures, Section 58.01.01.572 Final Conformity Determinations by USDOT, Section 58.01.01.573 Resolving Conflicts, Section 58.01.01.574 Public Consultation Procedures.

(33) On February 9, 2001, the Idaho Department of Environmental Quality submitted amendments to State of Idaho's Rules and Regulations for the Control of Air Pollution in Idaho as revisions to the Idaho state implementation plan as follows:

Section 58.01.01.582

(i) *Incorporation by reference.* (A) Section 58.01.01.582 Interim Conformity Provisions for Northern Ada County Former Nonattainment Area for PM–10.

(34) On February 9, 2001, the Idaho Department of Environmental Quality submitted amendments to State of Idaho's Rules and Regulations for the Control of Air Pollution in Idaho as revisions to the Idaho state implementation plan as follows: Section 58.01.01.204.

(i) *Incorporation by reference.* (A) IDAPA 58.01.01.204 Permit Requirements for New Major Facilities or Major Modifications in Nonattainment Areas and in the Former PM–10 Northern Ada County Nonattainment Area (as Defined in Section 582), state adopted January 26, 2001.

(35) On August 16, 1996, the State of Idaho adopted and submitted a revision to the SIP for Sandpoint, Idaho, for the purpose of bringing about the attainment of the national ambient air quality standards for particulate matter with an aerodynamic diameter less than or equal to a nominal 10 micrometers.

(i) *Incorporation by reference.* (A) Ordinance No. 939, Material Specifications for Street Sanding Material, as adopted by the City of Sandpoint on February 22, 1994.

(B) Ordinance No. 965, Solid Fuel Heating Appliance Ordinance, as adopted by the City of Sandpoint on February 21, 1995.

(C) The following terms and conditions limiting particulate matter emissions in the following permits:

(*1*) State of Idaho Air Pollution Operating Permit for Lake Pre-Mix concrete, Permit No. 777–00182, issued May 17, 1996, the following conditions for the cement silo vent: 1.1, 2.1.1, 2.1.2, 3.1.1, and 3.1.2.

(*2*) State of Idaho Air Pollution Operating Permit for Interstate Concrete & Asphalt, Permit No. 017–00048, issued August 2, 1999, the following conditions: for the asphalt plant, 2.2, 3.1.1, 4.1, 4.1.1, 4.1.2, 4.2.1 (as it applies to the hourly PM_{10} emission limit in Appendix A), 4.2.2, 4.2.2.1, 4.2.2.2, and 4.2.2.3; for the concrete batch plant, 2.1, 3.1.1, 4.1, 4.1.1, and 4.1.2; Appendix A (as it applies to PM_{10} emission rates after 7/1/96) and Appendix B (as it applies after 7/1/96).

(*3*) State of Idaho Department of Environmental Quality Air Quality Tier II Operating Permit for Louisiana-Pacific Corporation, Permit No. 017–00003, issued October 31, 2001, the following conditions: for the Kipper and Sons Hog Fuel Boiler, 2.3 (as it applies to PM_{10}), 2.5, 2.7, 2.13, 2.14, 2.17, 2.19; Cleaver-Brooks Natural Gas-Fired Boilers, 3.2 (as it applies to PM_{10}); Pneumatic Conveyance System, 4.2, 4.4, 4.7; Drying Kilns, 5.2, 5.4, 5.5; Fugitive Emission Sources, 6.5, 6.7, 6.13; and the Appendix (as it applies to PM_{10}).

(ii) *Additional materials.* (A) Sandpoint PM_{10} Air Quality Improvement Plan, adopted August 16, 1996.

(36) [Reserved]

(37) On May 17, 1994, May 11, 1995, November 21, 1996, February 28, 1997, December 18, 1997, April 9, 1998, May 5, 1999, December 5, 2000, and May 30, 2002, the Idaho Department of Environmental Quality submitted amendments to State of Idaho Rules for Control of Air Pollution in Idaho (IDAPA 58.01.01) as revisions to the Idaho State implementation plan.

(i) *Incorporation by reference.* (A) IDAPA 58.01.01 as in effect on March 30, 2001 except for the following provisions:

section 000; section 002; section 003; section 008; section 009; section 010; subsections 107.03; section 128; sections 140 through 149; section 161; subsection 203.03; section 209; section 210; section 214; subsection 222.03; section 223; sections 300 through 387; subsection 401.01.a. and 401.04; sections 440 and 441; sections 525 through 538; sections 552, 553, 556, 558, and 561; subsection 577.06; sections 585, 586, 587, 590 and 591; section 700; section 710; sections 750 and 751; sections 775 and 776; section 818; section 819; section 820; subsection 824.01; sections 835 through 839; and sections 855 through 862.

(B) IDAPA 58.01.01 sections 209 and 700 as in effect on April 5, 2000.

(C) IDAPA 58.01.01 sections 552, 553, 556, 558, and 561 as in effect on March 15, 2002.

(38) The Idaho Department of Environmental Quality (Idaho DEQ, the State, or Idaho) submitted a PM_{10} maintenance plan and redesignation request for the Ada County/Boise, Idaho area on September 27, 2002, and provided supplemental information on July 10, 2003 and July 21, 2003.

(i) *Incorporation by reference.* (A) The following terms and conditions limiting particulate matter emissions in the following permits:

(*1*) State of Idaho Air Pollution Operating Permit for LP Wood Polymers, Inc. Permit No. 001–00115, issued July 12, 2002, the following conditions: 1.1, 1.3, 3.1, and the Appendix.

(*2*) State of Idaho Air Pollution Operating Permit for Consolidated Concrete Company, Permit No. 001–00046, issued December 03, 2001, the following conditions: 1.1, 1.3, 2.3, 3.1, 3.2, and the Appendix.

(*3*) State of Idaho Air Pollution Operating Permit for Crookham Company, Permit No. 027–00020, issued January 18, 2002, the following conditions: 1.1, 1.3, 2.1, 2.3, 3.1, 3.1.1, 3.1.2, 3.2, and the Appendix.

(*4*) State of Idaho Air Pollution Operating Permit for Double D Service Center, Permit No. 001–00168, issued February 4, 2002, the following conditions: 1.1, 1.3, 3.1, 3.2.1, 3.2.2, 3.2.3, and the Appendix.

(*5*) State of Idaho Air Pollution Operating Permit for Plum Creek Northwest Lumber, Inc., Permit No. 001–00091, issued July 12, 2002, the following conditions: 1.1, 1.3, 2.1.2, 3.1, and the Appendix.

(*6*) State of Idaho Air Pollution Operating Permit for C. Wright Construction, Inc., Permit No. T2–000033, issued July 08, 2003, the following conditions: 2 (heading only), 2.5, (2.12, Table 2.2 as it applies to PM_{10}), 2.14, 3 (heading only), 3.3, Table 3.2, 3.4, 3.5, 3.6, 3.7, 3.8, 3.10, 4 (heading only), 4.2, 4.3, 4.4, 4.7, 5, and Table 5.1.

(*7*) State of Idaho Air Pollution Operating Permit for Nelson Construction Co., Permit No. T2–020029, issued July 21, 2003, the following conditions: 2 (heading only), 2.12, 2.14, 3 (heading only, 3.3, 3.4, 3.6, 3.7, 3.9, 3.10, 3.11, 3.12, 4 (heading only), 4.3, 4.4, 4.5, 4.6, 5, and Table 5.1.

(*8*) State of Idaho Air Pollution Operating Permit for Mike's Sand and Gravel, Permit No. 001–00184, issued July 12, 2002, the following conditions: 1.1, 1.3, 2.2.1, 3.1, and the Appendix.

(*9*) State of Idaho Air Pollution Operating Permit for Idaho Concrete Co., Permit No. T2–020031, issued July 8, 2003, the following conditions: 2 (heading only), 2.5, 2.13, 3 (heading only), 3.3, 3.4, 3.6, 3.7, 3.8, 4 (heading only), and Table 4.1.

(*10*) State of Idaho Air Pollution Operating Permit for Idaho Concrete Co., Permit No T2–020032, issued July 8, 2003, the following conditions: 2 (heading only), 2.5, 2.13, 3 (heading only), 3.3, 3.4, 3.6, 3.7, 3.8, 4 (heading only), and Table 4.1.

(*11*) State of Idaho Air Pollution Operating Permit for Idaho Concrete Co., Permit No. T2–020033, issued July 8, 2003, the following conditions: 2 (heading only), 2.5, 2.13, 3 (heading only), 3.3, 3.4, 3.6, 3.7, 3.8, 4 (heading only), and Table 4.1.

(*12*) State of Idaho Air Pollution Operating Permit for The Amalgamated Sugar Company LLC, Permit No. 027–00010, issued September 30, 2002, the following conditions: 2 (heading only), (2.7, Table 2.2 as it applies to PM_{10}), 2.10, 2.10.1, 2.10.2, 2.11, 2.11.1, 2.11.2, 2.11.3, 2.11.4, 2.11.5, 2.12, 2.12.1, 2.12.2, 2.12.3, 2.13, 2.13.1, 2.13.2, 2.13.3, 2.14, 2.14.1, 2.14.2, 2.16, 3 (heading only), (3.3, Table 3.2 as it applies to PM_{10}), 3.5, 3.7, 3.8, 3.8.1, 3.8.2, 3.8.3, 3.8.4, 3.8.5, 3.8.6, 3.8.7, 3.8.8, 3.9, 4 (heading only), (4.3,

Table 4.1 as it applies to PM_{10}), 4.5, 4.6, 4.7, 5 (heading only), (5.3, Table 5.3 as it applies to PM_{10}), 5.5, 5.9, 5.9.1, 5.9.2, 5.9.3, 5.9.4, 5.9.5, 5.9.6, 5.9.7, 5.9.8, 5.9.9, 5.10, 5.11, 6 (heading only), 6.3, Table 6.1, 6.5, 6.6, 6.7, 6.7.1, 6.7.2, 6.8, 7 (heading only), (7.3, Table 7.1 as it applies to PM_{10}), 7.5, 7.7, 7.7.1, 7.7.2, 7.8, 8 (heading only), 8.3, Table 8.1, 8.5, 8.7, 8.7.1, 8.7.2, 8.8, 9 (heading only), 9.3, Table 9.1, 9.5, 9.7, 9.7.1, 9.7.2, 9.8, 10 (heading only), 10.3, Table 10.1, 10.6, 10.8, 10.8.1, 10.8.2, 10.9, 11 (heading only), 11.3, Table 11.2, 11.6, 11.8, 11.8.1, 11.8.2, 11.9, 12 (heading only), 12.3, Table 12.1, 12.5, 12.7, 12.7.1, 12.7.2, 12.8, 13 (heading only), 13.1 (except as it applies to conditions 13.3, 13.3.1, 13.3.2, 13.5, 13.5.1, 13.5.2, 13.5.3, 13.6, 13.6.1, 13.6.2 and 13.9), Table 13.1 (except conditions 13.3, 13.5 and 13.6), (13.2, Table 13.2 as it applies to PM_{10}), 13.2.1, 13.4, 13.4.1, 13.4.2, 13.4.3, 13.7, 13.7.1, 13.7.2, 13.8, 13.8.1, 13.8.2, 13.8.3, 13.10, and 13.11.

[37 FR 10861, May 31, 1972]

EDITORIAL NOTE: For FEDERAL REGISTER citations affecting § 52.677, see the List of CFR Sections Affected, which appears in the Finding Aids section of the printed volume and at *www.fdsys.gov*.

§§ 52.678–52.680 [Reserved]

§ 52.681 Permits to construct and tier II operating permits.

(a) Except as otherwise provided in paragraph (b) of this section, emission limitations and other provisions contained in Permits to Construct and Tier II Operating Permits issued by the Idaho Department of Environmental Quality in accordance with the Federally-approved State of Idaho Rules for Control of Air Pollution in Idaho, incorporated by reference in section 52.670 (IDAPA 58.01.01.200 through 222, IDAPA 58.01.01.400 through 406), shall be applicable requirements of the Federally-approved Idaho SIP (in addition to any other provisions) for the purposes of section 113 of the Clean Air Act and shall be enforceable by EPA and by any person in the same manner as other requirements of the SIP.

(b) Operating Permits authorizing the use of alternative emission limits (bubbles) under IDAPA 58.01.01.401.01.a, 58.01.01.440, and 58.01.01.441 (including the use of banked emission reduction credits in a bubble pursuant to IDAPA 58.01.01.461), and Tier II Operating Permits authorizing compliance schedule extensions under IDAPA 58.01.01.401.04 must be submitted to EPA for approval as revisions to the Idaho SIP before they become applicable requirements of the Idaho SIP.

[68 FR 2225, Jan. 16, 2003]

§ 52.682 [Reserved]

§ 52.683 Significant deterioration of air quality.

(a) The State of Idaho Rules for Control of Air Pollution in Idaho, specifically, IDAPA 58.01.01.005 through 007 (definitions), IDAPA 58.01.01.107.03.a, .b, .c (incorporations by reference), IDAPA 58.01.01.200 through 222 (permit to construct rules); IDAPA 58.01.01.510 through 516 (stack height rules); and IDAPA 58.01.01.575 through 581 (standards, increments and area designations) (except IDAPA 58.01.01.577), are approved as meeting the requirements of title I, part C, subpart 1 of the Clean Air Act for preventing significant deterioration of air quality.

(b) The requirements of sections 160 through 165 of the Clean Air Act are not met for Indian reservations since the plan does not include approvable procedures for preventing significant deterioration of air quality on Indian reservations. Therefore, the provisions of § 52.21 except paragraph (a)(1) are hereby incorporated and made part of the applicable plan for Indian reservations in the State of Idaho.

(c) The requirements of section 165 of the Clean Air Act are not met for sources subject to prevention of significant deterioration requirements prior to August 22, 1986, the effective date of EPA's approval of the rules cited in paragraph (a) of this section. Therefore, the provisions of § 52.21 except paragraph (a)(1) are hereby incorporated and made part of the applicable plan for sources subject to § 52.21 prior to August 22, 1986.

[68 FR 2226, Jan. 16, 2003, as amended at 68 FR 20072, Apr. 24, 2003; 68 FR 74489, Dec. 24, 2003; 77 FR 76419, Dec. 28, 2012; 79 FR 11713, Mar. 3, 2014; 80 FR 18528, Apr. 7, 2015; 81 FR 53294, Aug. 12, 2016]

§§ 52.684–52.689 [Reserved]

§ 52.690 Visibility protection.

(a) The requirements of section 169A of the Clean Air Act are not met, because the plan does not include approvable procedures for protection of visibility in mandatory Class I Federal areas.

(b)–(c) [Reserved]

[50 FR 28553, July 12, 1985; 51 FR 23759, July 1, 1986, as amended at 52 FR 45137, Nov. 24, 1987; 82 FR 3129, Jan. 10, 2017]

§ 52.691 Extensions.

(a) The Administrator, by authority delegated under section 188(d) of the Clean Air Act, as amended in 1990, hereby extends for one year (until December 31, 1995) the attainment date for the Power-Bannock Counties PM–10 nonattainment area and the Sandpoint PM–10 nonattainment area.

(b) The Administrator, by authority delegated under section 188(d) of the Clean Air Act, as amended in 1990, hereby grants a second one-year extension (until December 31, 1996) to the attainment date for the Power-Bannock Counties PM–10 nonattainment area.

[61 FR 20732, May 8, 1996, as amended at 61 FR 66606, Dec. 18, 1996]

Subpart O—Illinois

§ 52.719 [Reserved]

§ 52.720 Identification of plan.

(a) *Purpose and scope.* This section sets forth the applicable State implementation plan for the State of Illinois under section 110 of the Clean Air Act, 42 U.S.C. 7401–7671q and 40 CFR part 51 to meet national ambient air quality standards.

(b) *Incorporation by reference.* (1) Material listed in paragraphs (c) and (d) of this section with an EPA approval date prior to December 31, 2016, was approved for incorporation by reference by the Director of the Federal Register in accordance with 5 U.S.C. 552(a) and 1 CFR part 51. Entries in paragraphs (c) and (d) of this section with the EPA approval dates after December 31, 2016, have been approved by EPA for inclusion in the State implementation plan and for incorporation by reference into the plan as it is contained in this section, and will be considered by the Director of the Federal Register for approval in the next update to the SIP compilation.

(2) EPA Region 5 certifies that the materials provided by EPA at the addresses in paragraph (b)(3) of this section are an exact duplicate of the officially promulgated state rules/regulations which have been approved as part of the state implementation plan as of the dates referenced in paragraph (b)(1).

(3) Copies of the materials incorporated by reference into the SIP may be inspected at the Region 5 EPA Office at 77 West Jackson Boulevard, Chicago, IL 60604. To obtain the material, please contact the person identified in the **FOR FURTHER INFORMATION CONTACT** section of this preamble. You may also inspect the material with an EPA approval date prior to June 1, 2017, at the National Archives and Records Administration (NARA). For information on the availability of this material at NARA, go to: *http://www.archives.gov/federal-register/cfr/ibr-locations.html.*

(c) *EPA approved regulations.*

EPA-APPROVED ILLINOIS REGULATIONS AND STATUTES

Illinois citation	Title/subject	State effective date	EPA approval date	Comments
Title 35 of the Illinois Administrative Code				
Subtitle A: General Provisions				
Chapter I: Pollution Control Board				
Part 106: Procedural Regulations				
Subpart E: Alternative Opacity Procedures				
106.501	Scope and Applicability	7/13/1988	12/29/1992, 57 FR 61834.	
106.502	Joint or Single Petition	7/13/1988	12/29/1992, 57 FR 61834.	
106.503	Request to Agency to Join as Co-Petitioner.	7/13/1988	12/29/1992, 57 FR 61834.	
106.504	Contents of Petition	7/13/1988	12/29/1992, 57 FR 61834.	
106.505	Response and Reply	7/13/1988	12/29/1992, 57 FR 61834.	
106.506	Notice and Conduct of Hearing	6/5/1990	12/29/1992, 57 FR 61834.	
106.507	Opinions and Orders	7/13/1988	12/29/1992, 57 FR 61834.	
Subpart J: Culpability Determinations				
106.930	Applicability	7/11/1994	7/13/1995, 60 FR 36060.	
106.931	Petition for Review	7/11/1994	7/13/1995, 60 FR 36060.	
106.932	Response and Reply	7/11/1994	7/13/1995, 60 FR 36060.	
106.933	Notice and Hearing	7/11/1994	7/13/1995, 60 FR 36060.	
106.934	Opinion and Order	7/11/1994	7/13/1995, 60 FR 36060.	
Subtitle B: Air Pollution				
Chapter I: Pollution Control Board				
Subchapter a: Permits and General Provisions				
Part 201: Permits and General Provisions				
Subpart A: Definitions				
201.102	Definitions	4/14/1972	5/31/1972, 37 FR 10862	Approved as Rule 101.
Subpart B: General Provisions				
201.121	Existence of Permit No Defense	4/14/1972	5/31/1972, 37 FR 10862	Approved as Rule 103(h).
201.122	Proof of Emissions	4/14/1972	5/31/1972, 37 FR 10862	Approved as Rule 108.
201.123	Burden of Persuasion Regarding Exceptions.	4/14/1972	5/31/1972, 37 FR 10862	Approved as Rule 111.
201.124	Annual Report	4/14/1972	5/31/1972, 37 FR 10862	Approved as Rule 112.
201.125	Severability	4/14/1972	5/31/1972, 37 FR 10862	Approved as Rule 113.
201.126	Repealer	4/14/1972	5/31/1972, 37 FR 10862	Approved as Rule 114.
Subpart C: Prohibitions				
201.141	Prohibition of Air Pollution	4/14/1972	5/31/1972, 37 FR 10862	Approved as Rule 102.
201.142	Construction Permit Required	4/14/1972	5/31/1972, 37 FR 10862	Approved as Rule 103(a)(1).
201.143	Operating Permits for New Sources	4/14/1972	5/31/1972, 37 FR 10862	Approved as Rule 103(b)(1).
201.144	Operating Permits for Existing Sources.	4/14/1972	5/31/1972, 37 FR 10862	Approved as Rule 103(b)(2).
201.146	Exemptions From State Permit Requirements.	12/23/2013	3/13/2015, 80 FR 13248.	
201.147	Former Permits	4/14/1972	5/31/1972, 37 FR 10862	Approved as Rule 103(j).
201.148	Operation Without Compliance Program and Project Completion Schedule.	4/14/1972	5/31/1972, 37 FR 10862	Approved as Rule 104(a).
201.149	Operation During Malfunction, Breakdown or Startups.	4/14/1972	5/31/1972, 37 FR 10862	Approved as Rule 105(a).
201.150	Circumvention	4/14/1972	5/31/1972, 37 FR 10862	Approved as Rule 109.
201.151	Design of Effluent Exhaust Systems	4/14/1972	5/31/1972, 37 FR 10862	Approved as Rule 110.

EPA-APPROVED ILLINOIS REGULATIONS AND STATUTES—Continued

Illinois citation	Title/subject	State effective date	EPA approval date	Comments
Subpart D: Permit Applications and Review Process				
201.152	Contents of Application for Construction Permit.	6/23/1998	1/3/2000, 65 FR 14.	
201.156	Conditions	4/14/1972	5/31/1972, 37 FR 10862	Approved as Rule 103(a)(6).
201.157	Contents of Application for Operating Permit.	6/23/1998	1/3/2000, 65 FR 14.	
201.158	Incomplete Applications	6/23/1998	1/3/2000, 65 FR 14.	
201.159	Signatures	6/23/1998	1/3/2000, 65 FR 14.	
201.160	Standards for Issuance	6/23/1998	1/3/2000, 65 FR 14.	
201.161	Conditions	4/14/1972	5/31/1972, 37 FR 10862	Approved as Rule 103(b)(7).
201.162	Duration	12/1/2010	4/7/2014, 79 FR 18997.	
201.163	Joint Construction and Operating Permits.	6/23/1998	1/3/2000, 65 FR 14.	
201.164	Design Criteria	6/23/1998	1/3/2000, 65 FR 14.	
201.165	Hearings	4/14/1972	5/31/1972, 37 FR 10862	Approved as Rule 103(e).
201.166	Revocation	4/14/1972	5/31/1972, 37 FR 10862	Approved as Rule 103(f).
201.167	Revisions to Permits	4/14/1972	5/31/1972, 37 FR 10862	Approved as Rule 103(g).
201.168	Appeals From Conditions	4/14/1972	5/31/1972, 37 FR 10862	Approved as Rule 103(k).
Subpart F: CAAPP Permits				
201.207	Applicability	6/23/1998	1/3/2000, 65 FR 14.	
Subpart H: Compliance Programs and Project Completion Schedules				
201.241	Contents of Compliance Program	4/14/1972	5/31/1972, 37 FR 10862	Approved as Rule 104(b)(1).
201.242	Contents of Project Completion Schedule.	4/14/1972	5/31/1972, 37 FR 10862	Approved as Rule 104(b)(2, 3).
201.243	Standards for Approval	4/14/1972	5/31/1972, 37 FR 10862	Approved as Rule 104(c).
201.244	Revisions	4/14/1972	5/31/1972, 37 FR 10862	Approved as Rule 104(d).
201.245	Effects of Approval	4/14/1972	5/31/1972, 37 FR 10862	Approved as Rule 104(e).
201.246	Records and Reports	4/14/1972	5/31/1972, 37 FR 10862	Approved as Rule 104(f).
Subpart I: Malfunctions, Breakdowns or Startups				
201.261	Contents of Request for Permission To Operate During a Malfunction, Breakdown or Startup.	4/14/1972	5/31/1972, 37 FR 10862	Approved as Rule 105(b).
201.262	Standards for Granting Permission To Operate During a Malfunction, Breakdown or Startup.	4/14/1972	5/31/1972, 37 FR 10862	Approved as Rule 105(c).
201.263	Records and Reports	4/14/1972	5/31/1972, 37 FR 10862	Approved as Rule 105(d).
201.264	Continued Operation or Startup Prior to Granting of Operating Permit.	4/14/1972	5/31/1972, 37 FR 10862	Approved as Rule 105(e).
201.265	Effect of Granting of Permission To Operate During a Malfunction, Breakdown or Startup.	4/14/1972	5/31/1972, 37 FR 10862	Approved as Rule 105(f).
Subpart J: Monitoring and Testing				
201.281	Permit Monitoring Equipment Requirements.	2/3/1989	4/6/1993, 58 FR 17780.	
201.282	Testing	4/14/1972	5/31/1972, 37 FR 10862	Approved as Rule 106(b).
201.283	Records and Reports	4/14/1972	5/31/1972, 37 FR 10862	Approved as Rule 106(c).
Subpart K: Records and Reports				
201.301	Records	4/14/1972	5/31/1972, 37 FR 10862	Approved as Rule 107(a).
201.302	Reports	12/23/2013	3/13/2015, 80 FR 13248.	
Subpart L: Continuous Monitoring				
201.401	Continuous Monitoring Requirements	2/3/1989	4/6/1993, 58 FR 17780.	
201.402	Alternative Monitoring	2/3/1989	4/6/1993, 58 FR 17780.	
201.403	Exempt Sources	2/3/1989	4/6/1993, 58 FR 17780.	
201.404	Monitoring System Malfunction	2/3/1989	4/6/1993, 58 FR 17780.	
201.405	Excess Emission Reporting	2/3/1989	4/6/1993, 58 FR 17780.	

EPA-APPROVED ILLINOIS REGULATIONS AND STATUTES—Continued

Illinois citation	Title/subject	State effective date	EPA approval date	Comments
201.406	Data Reduction	2/3/1989	4/6/1993, 58 FR 17780.	
201.407	Retention of Information	2/3/1989	4/6/1993, 58 FR 17780.	
201.408	Compliance Schedules	2/3/1989	4/6/1993, 58 FR 17780.	
Part 203: Major Stationary Sources Construction and Modification				
Subpart A: General Provisions				
203.101	Definitions	4/30/1993	9/27/1995, 60 FR 49778.	
203.103	Actual Construction	3/22/1988	12/17/1992, 57 FR 59928.	
203.104	Actual Emissions	3/22/1988	12/17/1992, 57 FR 59928.	
203.107	Allowable Emissions	4/30/1993	9/27/1995, 60 FR 49778.	
203.110	Available Growth Margin	4/30/1993	9/27/1995, 60 FR 49778.	
203.112	Building, Structure and Facility	4/30/1993	9/27/1995, 60 FR 49778.	
203.113	Commence	3/22/1988	12/17/1992, 57 FR 59928.	
203.116	Construction	3/22/1988	12/17/1992, 57 FR 59928.	
203.117	Dispersion Enhancement Techniques	3/22/1988	12/17/1992, 57 FR 59928.	
203.119	Emission Baseline	7/22/1983	12/17/1992, 57 FR 59928.	
203.121	Emission Offset	4/30/1993	9/27/1995, 60 FR 49778.	
203.122	Emissions Unit	4/30/1993	9/27/1995, 60 FR 49778.	
203.123	Federally Enforceable	4/30/1993	9/27/1995, 60 FR 49778.	
203.124	Fugitive Emissions	3/22/1988	12/17/1992, 57 FR 59928.	
203.125	Installation	3/22/1988	12/17/1992, 57 FR 59928.	
203.126	Lowest Achievable Emission Rate	4/30/1993	9/27/1995, 60 FR 49778.	
203.127	Nonattainment Area	3/22/1988	12/17/1992, 57 FR 59928.	
203.128	Potential To Emit	4/30/1993	9/27/1995, 60 FR 49778.	
203.131	Reasonable Further Progress	3/22/1988	12/17/1992, 57 FR 59928.	
203.134	Secondary Emissions	3/22/1988	12/17/1992, 57 FR 59928.	
203.136	Stationary Source	3/22/1988	12/17/1992, 57 FR 59928.	
203.150	Public Participation	4/30/1993	9/27/1995, 60 FR 49778.	
Subpart B: Major Stationary Sources in Nonattainment Areas				
203.201	Prohibition	4/30/1993	9/27/1995, 60 FR 49778.	
203.202	Coordination With Permit Requirement and Application Pursuant to 35 Ill. Adm. Code 201.	3/22/1988	12/17/1992, 57 FR 59928.	
203.203	Construction Permit Requirement and Application.	4/30/1993	9/27/1995, 60 FR 49778.	
203.205	Effect of Permits	3/22/1988	12/17/1992, 57 FR 59928.	
203.206	Major Stationary Source	3/10/1998	5/13/2003, 68 FR 25504.	
203.207	Major Modification of a Source	3/10/1998	5/13/2003, 68 FR 25504.	
203.208	Net Emission Determination	4/30/1993	9/27/1995, 60 FR 49778.	
203.209	Significant Emissions Determination	4/30/1993	9/27/1995, 60 FR 49778.	
203.210	Relaxation of a Source-Specific Limitation.	3/22/1988	12/17/1992, 57 FR 59928.	
203.211	Permit Exemption Based on Fugitive Emissions.	3/22/1988	12/17/1992, 57 FR 59928.	
Subpart C: Requirements for Major Stationary Sources in Nonattainment Areas				
203.301	Lowest Achievable Emission Rate	3/10/1998	5/13/2003, 68 FR 25504.	
203.302	Maintenance of Reasonable Further Progress and Emission Offsets.	4/30/1993	9/27/1995, 60 FR 49778.	
203.303	Baseline and Emission Offsets Determination.	4/30/1993	9/27/1995, 60 FR 49778.	
203.305	Compliance by Existing Sources	3/22/1988	12/17/1992, 57 FR 59928.	
203.306	Analysis of Alternatives	4/30/1993	9/27/1995, 60 FR 49778.	
Subpart F: Operation of a Major Stationary Source or Major Modification				
203.601	Lowest Achievable Emission Rate Compliance Requirement.	3/22/1988	12/17/1992, 57 FR 59928.	
203.602	Emission Offset Maintenance Requirement.	3/22/1988	12/17/1992, 57 FR 59928.	
Subpart G: General Maintenance of Emission Offsets				
203.701	General Maintenance of Emission Offsets.	3/22/1988	12/17/1992, 57 FR 59928.	

EPA-APPROVED ILLINOIS REGULATIONS AND STATUTES—Continued

Illinois citation	Title/subject	State effective date	EPA approval date	Comments
Subpart H: Offsets for Emission Increases From Rocket Engines and Motor Firing				
203.801	Offsetting by Alternative or Innovative Means.	5/14/1993	9/27/1995, 60 FR 49778.	
Subchapter b: Alternative Reduction Program				
Part 205: Emissions Reduction Market System				
Subpart A: General Provisions				
205.100	Severability	11/25/1997	10/15/2001, 66 FR 52343.	
205.110	Purpose	11/25/1997	10/15/2001, 66 FR 52343.	
205.120	Abbreviations and Acronyms	6/13/2005	7/7/2008, 73 FR 38328.	
205.130	Definitions	6/13/2005	7/7/2008, 73 FR 38328.	
205.150	Emissions Management Periods	6/13/2005	7/7/2008, 73 FR 38328	Except 150(e).
Subpart B: Applicability				
205.200	Participating Source	6/13/2005	7/7/2008, 73 FR 38328.	
205.205	Exempt Source	6/13/2005	7/7/2008, 73 FR 38328.	
205.210	New Participating Source	6/13/2005	7/7/2008, 73 FR 38328.	
205.220	Insignificant Emission Units	6/13/2005	7/7/2008, 73 FR 38328.	
205.225	Startup, Malfunction or Breakdown	11/25/1997	10/15/2001, 66 FR 52343.	
Subpart C: Operational Implementation				
205.300	Seasonal Emissions Component of the Annual Emissions Report.	6/13/2005	7/7/2008, 73 FR 38328.	
205.310	ERMS Applications	6/13/2005	7/7/2008, 73 FR 38328.	
205.315	CAAPP Permits for ERMS Sources	6/13/2005	7/7/2008, 73 FR 38328.	
205.316	Federally Enforceable State Operating Permits for ERMS Sources.	6/13/2005	7/7/2008, 73 FR 38328.	
205.318	Certification for Exempt CAAPP Sources.	6/13/2005	7/7/2008, 73 FR 38328.	
205.320	Baseline Emissions	6/13/2005	7/7/2008, 73 FR 38328.	
205.330	Emissions Determination Methods	6/13/2005	7/7/2008, 73 FR 38328.	
205.335	Sampling, Testing, Monitoring and Recordkeeping Practices.	6/13/2005	7/7/2008, 73 FR 38328.	
205.337	Changes in Emissions Determination Methods and Sampling, Testing, Monitoring and Recordkeeping Practices.	6/13/2005	7/7/2008, 73 FR 38328.	
Subpart D: Seasonal Emissions Management				
205.400	Seasonal Emissions Allotment	6/13/2005	7/7/2008, 73 FR 38328.	
205.405	Exclusions From Further Reductions	6/13/2005	7/7/2008, 73 FR 38328.	
205.410	Participating Source Shutdowns	6/13/2005	7/7/2008, 73 FR 38328.	
Subpart E: Alternative ATU Generation				
205.500	Emissions Reduction Generator	6/13/2005	7/7/2008, 73 FR 38328.	
205.510	Inter-Sector Transaction	6/13/2005	7/7/2008, 73 FR 38328.	
Subpart F: Market Transactions				
205.600	ERMS Database	11/25/1997	10/15/2001, 66 FR 52343.	
205.610	Application for Transaction Account	6/13/2005	7/7/2008, 73 FR 38328.	
205.620	Account Officer	11/25/1997	10/15/2001, 66 FR 52343.	
205.630	ATU Transaction Procedures	11/25/1997	10/15/2001, 66 FR 52343.	
Subpart G: Performance Accountability				
205.700	Compliance Accounting	6/13/2005	7/7/2008, 73 FR 38328.	
205.710	Alternative Compliance Market Account (ACMA).	11/25/1997	10/15/2001, 66 FR 52343.	
205.720	Emissions Excursion Compensation	11/25/1997	10/15/2001, 66 FR 52343.	
205.730	Excursion Reporting	6/13/2005	7/7/2008, 73 FR 38328.	
205.740	Enforcement Authority	11/25/1997	10/15/2001, 66 FR 52343.	
205.750	Emergency Conditions	6/13/2005	7/7/2008, 73 FR 38328.	

EPA-APPROVED ILLINOIS REGULATIONS AND STATUTES—Continued

Illinois citation	Title/subject	State effective date	EPA approval date	Comments
205.760	Market System Review Procedures	6/13/2005	7/7/2008, 73 FR 38328.	
Subchapter c: Emission Standards and Limitations for Stationary Sources				
Part 211: Definitions and General Provisions				
Subpart A: General Provisions				
211.101	Incorporations by Reference	1/28/2013	10/6/2014, 79 FR 60070.	
211.102	Abbreviations and Conversion Factors.	9/14/2010	3/23/2012, 77 FR 16940.	
Subpart B: Definitions				
211.121	Other Definitions	9/27/1993	9/9/1994, 59 FR 46562.	
211.130	Accelacota	9/27/1993	9/9/1994, 59 FR 46562.	
211.150	Accumulator	9/27/1993	9/9/1994, 59 FR 46562.	
211.170	Acid Gases	9/27/1993	9/9/1994, 59 FR 46562.	
211.200	Acrylonitrile Butadiene Styrene (ABS) Welding.	9/14/2010	3/23/2012, 77 FR 16940.	
211.210	Actual Heat Input	9/27/1993	9/9/1994, 59 FR 46562.	
211.230	Adhesive	9/27/1993	9/9/1994, 59 FR 46562.	
211.233	Adhesion Primer	9/14/2010	3/23/2012, 77 FR 16940.	
211.235	Adhesive Primer	9/14/2010	3/23/2012, 77 FR 16940.	
211.240	Adhesion Promoter	5/9/1995	7/25/1996, 61 FR 38577.	
211.250	Aeration	9/27/1993	9/9/1994, 59 FR 46562.	
211.260	Aerosol Adhesive and Adhesive Primer.	9/14/2010	3/23/2012, 77 FR 16940.	
211.270	Aerosol Can Filling Line	1/18/1994	10/21/1996, 61 FR 54556.	
211.290	Afterburner	9/27/1993	9/9/1994, 59 FR 46562.	
211.310	Air Contaminant	9/27/1993	9/9/1994, 59 FR 46562.	
211.330	Air Dried Coatings	9/27/1993	9/9/1994, 59 FR 46562.	
211.350	Air Oxidation Process	9/27/1993	9/9/1994, 59 FR 46562.	
211.370	Air Pollutant	9/27/1993	9/9/1994, 59 FR 46562.	
211.390	Air Pollution	9/27/1993	9/9/1994, 59 FR 46562.	
211.410	Air Pollution Control Equipment	9/27/1993	9/9/1994, 59 FR 46562.	
211.430	Air Suspension Coater/Dryer	9/27/1993	9/9/1994, 59 FR 46562.	
211.450	Airless Spray	9/27/1993	9/9/1994, 59 FR 46562.	
211.470	Air Assisted Airless Spray	9/27/1993	9/9/1994, 59 FR 46562.	
211.474	Alcohol	5/9/1995	11/8/1995, 60 FR 56238.	
211.481	Ammunition Sealant	9/14/2010	3/23/2012, 77 FR 16940.	
211.490	Annual Grain Through Put	9/27/1993	9/9/1994, 59 FR 46562.	
211.492	Antifoulant Coating	9/14/2010	3/23/2012, 77 FR 16940.	
211.493	Antifouling Sealer/Tie Coat	7/27/2011	3/23/2012, 77 FR 16940.	
211.495	Anti-Glare/Safety Coating	5/9/1995	7/25/1996, 61 FR 38577.	
211.510	Application Area	9/27/1993	9/9/1994, 59 FR 46562.	
211.530	Architectural Coating	9/27/1993	9/9/1994, 59 FR 46562.	
211.540	Architectural Structure	9/14/2010	3/23/2012, 77 FR 16940.	
211.550	As Applied	9/27/1993	9/9/1994, 59 FR 46562.	
211.560	As-Applied Fountain Solution	5/9/1995	11/8/1995, 60 FR 56238.	
211.570	Asphalt	9/27/1993	9/9/1994, 59 FR 46562.	
211.590	Asphalt Prime Coat	9/27/1993	9/9/1994, 59 FR 46562.	
211.610	Automobile	9/27/1993	9/9/1994, 59 FR 46562.	
211.630	Automobile or Light Duty Truck Assembly Source or Automobile or Light Duty Truck Manufacturing Plant.	9/27/1993	9/9/1994, 59 FR 46562.	
211.650	Automobile or Light Duty Truck Refinishing.	9/27/1993	9/9/1994, 59 FR 46562.	
211.660	Automotive/Transportation Plastic Parts.	5/9/1995	10/26/1995, 60 FR 54807.	
211.670	Baked Coatings	5/9/1995	10/26/1995, 60 FR 54807.	
211.685	Basecoat/Clearcoat System	5/9/1995	7/25/1996, 61 FR 38577.	
211.690	Batch Loading	9/27/1993	9/9/1994, 59 FR 46562.	
211.695	Batch Operation	5/22/1995	4/2/1996, 61 FR 14484.	
211.696	Batch Process Train	5/22/1995	4/2/1996, 61 FR 14484.	
211.710	Bead Dipping	9/27/1993	9/9/1994, 59 FR 46562.	
211.715	Bedliner	9/14/2010	3/23/2012, 77 FR 16940.	
211.730	Binders	9/27/1993	9/9/1994, 59 FR 46562.	
211.735	Black Coating	9/14/2010	3/23/2012, 77 FR 16940.	
211.740	Brakehorsepower (rated-bhp)	9/25/2007	6/26/2009, 74 FR 30466.	

EPA-APPROVED ILLINOIS REGULATIONS AND STATUTES—Continued

Illinois citation	Title/subject	State effective date	EPA approval date	Comments
211.750	British Thermal Unit	9/27/1993	9/9/1994, 59 FR 46562.	
211.770	Brush or Wipe Coating	9/27/1993	9/9/1994, 59 FR 46562.	
211.790	Bulk Gasoline Plant	9/27/1993	9/9/1994, 59 FR 46562.	
211.810	Bulk Gasoline Terminal	9/27/1993	9/9/1994, 59 FR 46562.	
211.820	Business Machine Plastic Parts	9/14/2010	3/23/2012, 77 FR 16940.	
211.825	Camouflage Coating	9/14/2010	3/23/2012, 77 FR 16940.	
211.830	Can	9/27/1993	9/9/1994, 59 FR 46562.	
211.850	Can Coating	9/27/1993	9/9/1994, 59 FR 46562.	
211.870	Can Coating Line	9/27/1993	9/9/1994, 59 FR 46562.	
211.880	Cap Sealant	9/14/2010	3/23/2012, 77 FR 16940.	
211.890	Capture	9/27/1993	9/9/1994, 59 FR 46562.	
211.910	Capture Device	9/27/1993	9/9/1994, 59 FR 46562.	
211.930	Capture Efficiency	9/27/1993	9/9/1994, 59 FR 46562.	
211.950	Capture System	9/27/1993	9/9/1994, 59 FR 46562.	
211.954	Cavity Wax	9/14/2010	3/23/2012, 77 FR 16940.	
211.955	Cement	3/15/2001	11/8/2001, 66 FR 56449.	
211.960	Cement Kiln	3/15/2001	11/8/2001, 66 FR 56449.	
211.965	Ceramic Tile Installation Adhesive	9/14/2010	3/23/2012, 77 FR 16940.	
211.970	Certified Investigation	9/27/1993	9/9/1994, 59 FR 46562.	
211.980	Chemical Manufacturing Process Unit.	5/9/1995	3/23/1998, 63 FR 13784.	
211.990	Choke Loading	9/27/1993	9/9/1994, 59 FR 46562.	
211.1000	Class II Finish	6/25/2010	3/23/2012, 77 FR 16940.	
211.1010	Clean Air Act	9/27/1993	9/9/1994, 59 FR 46562.	
211.1050	Cleaning and Separating Operation	9/27/1993	9/9/1994, 59 FR 46562.	
211.1070	Cleaning Materials	1/18/1994	10/21/1996, 61 FR 54556.	
211.1090	Clear Coating	9/27/1993	9/9/1994, 59 FR 46562.	
211.1110	Clear Topcoat	9/27/1993	9/9/1994, 59 FR 46562.	
211.1120	Clinker	3/15/2001	11/8/2001, 66 FR 56449.	
211.1128	Closed Molding	9/14/2010	3/23/2012, 77 FR 16940.	
211.1130	Closed Purge System	9/27/1993	9/9/1994, 59 FR 46562.	
211.1150	Closed Vent System	9/27/1993	9/9/1994, 59 FR 46562.	
211.1170	Coal Refuse	9/27/1993	9/9/1994, 59 FR 46562.	
211.1190	Coating	9/27/1993	9/9/1994, 59 FR 46562.	
211.1210	Coating Applicator	9/27/1993	9/9/1994, 59 FR 46562.	
211.1230	Coating Line	9/27/1993	9/9/1994, 59 FR 46562.	
211.1250	Coating Plant	9/27/1993	9/9/1994, 59 FR 46562.	
211.1270	Coil Coating	9/27/1993	9/9/1994, 59 FR 46562.	
211.1290	Coil Coating Line	9/27/1993	9/9/1994, 59 FR 46562.	
211.1310	Cold Cleaning	9/27/1993	9/9/1994, 59 FR 46562.	
211.1330	Complete Combustion	9/27/1993	9/9/1994, 59 FR 46562.	
211.1350	Component	9/27/1993	9/9/1994, 59 FR 46562.	
211.1370	Concrete Curing Compounds	9/27/1993	9/9/1994, 59 FR 46562.	
211.1390	Concentrated Nitric Acid Manufacturing Process.	9/27/1993	9/9/1994, 59 FR 46562.	
211.1410	Condensate	9/27/1993	9/9/1994, 59 FR 46562.	
211.1430	Condensible PM 10	9/27/1993	9/9/1994, 59 FR 46562.	
211.1455	Contact Adhesive	9/14/2010	3/23/2012, 77 FR 16940.	
211.1467	Continuous Coater	2/2/1998	5/19/1998, 63 FR 27489.	
211.1470	Continuous Process	9/27/1993	9/9/1994, 59 FR 46562.	
211.1490	Control Device	9/27/1993	9/9/1994, 59 FR 46562.	
211.1510	Control Device Efficiency	9/27/1993	9/9/1994, 59 FR 46562.	
211.1520	Conventional Air Spray	2/2/1998	5/19/1998, 63 FR 27489.	
211.1530	Conventional Soybean Crushing Source.	9/27/1993	9/9/1994, 59 FR 46562.	
211.1550	Conveyorized Degreasing	9/27/1993	9/9/1994, 59 FR 46562.	
211.1560	Cove Base	9/14/2010	3/23/2012, 77 FR 16940.	
211.1565	Cove Base Installation Adhesive	9/14/2010	3/23/2012, 77 FR 16940.	
211.1570	Crude Oil	9/27/1993	9/9/1994, 59 FR 46562.	
211.1590	Crude Oil Gathering	9/27/1993	9/9/1994, 59 FR 46562.	
211.1610	Crushing	9/27/1993	9/9/1994, 59 FR 46562.	
211.1630	Custody Transfer	9/27/1993	9/9/1994, 59 FR 46562.	
211.1650	Cutback Asphalt	9/27/1993	9/9/1994, 59 FR 46562.	
211.1655	Cyanoacrylate Adhesive	9/14/2010	3/23/2012, 77 FR 16940.	
211.1670	Daily Weighted Average VOM Content.	9/27/1993	9/9/1994, 59 FR 46562.	
211.1690	Day	9/27/1993	9/9/1994, 59 FR 46562.	
211.1700	Deadener	9/14/2010	3/23/2012, 77 FR 16940.	
211.1710	Degreaser	9/27/1993	9/9/1994, 59 FR 46562.	
211.1730	Delivery Vessel	9/27/1993	9/9/1994, 59 FR 46562.	

EPA-APPROVED ILLINOIS REGULATIONS AND STATUTES—Continued

Illinois citation	Title/subject	State effective date	EPA approval date	Comments
211.1740	Diesel Engine	9/25/2007	6/26/2009, 74 FR 30466.	
211.1745	Digital Printing	6/25/2010	3/23/2012, 77 FR 16940.	
211.1750	Dip Coating	9/27/1993	9/9/1994, 59 FR 46562.	
211.1770	Distillate Fuel Oil	9/27/1993	9/9/1994, 59 FR 46562.	
211.1780	Distillation Unit	5/9/1995	3/23/1998, 63 FR 13784.	
211.1790	Drum	9/27/1993	9/9/1994, 59 FR 46562.	
211.1810	Dry Cleaning Operation or Dry Cleaning Facility.	9/27/1993	9/9/1994, 59 FR 46562.	
211.1830	Dump Pit Area	9/27/1993	9/9/1994, 59 FR 46562.	
211.1850	Effective Grate Area	9/27/1993	9/9/1994, 59 FR 46562.	
211.1870	Effluent Water Separator	9/27/1993	9/9/1994, 59 FR 46562.	
211.1872	Ejection Cartridge Sealant	9/14/2010	3/23/2012, 77 FR 16940.	
211.1875	Elastomeric Materials	5/9/1995	7/25/1996, 61 FR 38577.	
211.1876	Electric Dissipating Coating	9/14/2010	3/23/2012, 77 FR 16940.	
211.1877	Electric-Insulating Varnish	9/14/2010	3/23/2012, 77 FR 16940.	
211.1878	Electrical Apparatus Component	6/25/2010	3/23/2012, 77 FR 16940.	
211.1880	Electrical Switchgear Compartment Coating.	9/14/2010	3/23/2012, 77 FR 16940.	
211.1882	Electrodeposition Primer (EDP)	9/14/2010	3/23/2012, 77 FR 16940.	
211.1883	Electromagnetic Interference/Radio Frequency Interference (EMI/RFI) Shielding Coatings.	9/14/2010	3/23/2012, 77 FR 16940.	
211.1885	Electronic Component	6/25/2010	3/23/2012, 77 FR 16940.	
211.1890	Electrostatic Bell or Disc Spray	9/27/1993	9/9/1994, 59 FR 46562.	
211.1900	Electrostatic Prep Coat	5/9/1995	10/26/1995, 60 FR 54807.	
211.1910	Electrostatic Spray	9/27/1993	9/9/1994, 59 FR 46562.	
211.1920	Emergency or Standby Unit	9/25/2007	6/26/2009, 74 FR 30466.	
211.1930	Emission Rate	9/27/1993	9/9/1994, 59 FR 46562.	
211.1950	Emission Unit	9/27/1993	9/9/1994, 59 FR 46562.	
211.1970	Enamel	9/27/1993	9/9/1994, 59 FR 46562.	
211.1990	Enclose	9/27/1993	9/9/1994, 59 FR 46562.	
211.2010	End Sealing Compound Coat	9/27/1993	9/9/1994, 59 FR 46562.	
211.2030	Enhanced Under-the-Cup Fill	1/18/1994	10/21/1996, 61 FR 54556.	
211.2040	Etching Filler	9/14/2010	3/23/2012, 77 FR 16940.	
211.2050	Ethanol Blend Gasoline	9/27/1993	9/9/1994, 59 FR 46562.	
211.2055	Ethylene Propylenediene Monomer (DPDM) Roof Membrane.	9/14/2010	3/23/2012, 77 FR 16940.	
211.2070	Excess Air	9/27/1993	9/9/1994, 59 FR 46562.	
211.2090	Excessive Release	9/27/1993	9/9/1994, 59 FR 46562.	
211.2130	Existing Grain Handling Operation	9/27/1993	9/9/1994, 59 FR 46562.	
211.2150	Exterior Base Coat	9/27/1993	9/9/1994, 59 FR 46562.	
211.2170	Exterior End Coat	9/27/1993	9/9/1994, 59 FR 46562.	
211.2190	External Floating Roof	9/27/1993	9/9/1994, 59 FR 46562.	
211.2200	Extreme High-Gloss Coating	7/27/2011	3/23/2012, 77 FR 16940.	
211.2210	Extreme Performance Coating	9/14/2010	3/23/2012, 77 FR 16940.	
211.2230	Fabric Coating	9/27/1993	9/9/1994, 59 FR 46562.	
211.2250	Fabric Coating Line	9/27/1993	9/9/1994, 59 FR 46562.	
211.2270	Federally Enforceable Limitations and Conditions.	9/27/1993	9/9/1994, 59 FR 46562.	
211.2285	Feed Mill	6/17/1997	2/17/2000, 65 FR 8064.	
211.2300	Fill	11/15/1994	8/8/1996, 61 FR 41338.	
211.2310	Final Repair Coat	9/14/2010	3/23/2012, 77 FR 16940.	
211.2320	Finish Primer Surfacer	9/14/2010	3/23/2012, 77 FR 16940.	
211.2330	Firebox	9/27/1993	9/9/1994, 59 FR 46562.	
211.2350	Fixed Roof Tank	9/27/1993	9/9/1994, 59 FR 46562.	
211.2358	Flat Wood Paneling	7/27/2011	3/23/2012, 77 FR 16940.	
211.2359	Flat Wood Paneling Coating Line	6/25/2010	3/23/2012, 77 FR 16940.	
211.2360	Flexible Coating	9/14/2010	3/23/2012, 77 FR 16940.	
211.2365	Flexible Operation Unit	5/9/1995	3/23/1998, 63 FR 13784.	
211.2368	Flexible Packaging	6/25/2010	3/23/2012, 77 FR 16940.	
211.2369	Flexible Vinyl	9/14/2010	3/23/2012, 77 FR 16940.	
211.2370	Flexographic Printing	9/27/1993	9/9/1994, 59 FR 46562.	
211.2390	Flexographic Printing Line	9/27/1993	9/9/1994, 59 FR 46562.	
211.2410	Floating Roof	9/27/1993	9/9/1994, 59 FR 46562.	
211.2415	Fog Coat	9/14/2010	3/23/2012, 77 FR 16940.	
211.2430	Fountain Solution	9/27/1993	9/9/1994, 59 FR 46562.	
211.2450	Freeboard Height	9/27/1993	9/9/1994, 59 FR 46562.	
211.2470	Fuel Combustion Emission Unit or Fuel Combustion Emission Source.	9/27/1993	9/9/1994, 59 FR 46562.	
211.2490	Fugitive Particulate Matter	9/27/1993	9/9/1994, 59 FR 46562.	

EPA-APPROVED ILLINOIS REGULATIONS AND STATUTES—Continued

Illinois citation	Title/subject	State effective date	EPA approval date	Comments
211.2510	Full Operating Flowrate	9/27/1993	9/9/1994, 59 FR 46562.	
211.2525	Gasket/Gasket Sealing Material	9/14/2010	3/23/2012, 77 FR 16940.	
211.2530	Gas Service	9/27/1993	9/9/1994, 59 FR 46562.	
211.2550	Gas/Gas Method	9/27/1993	9/9/1994, 59 FR 46562.	
211.2570	Gasoline	9/27/1993	9/9/1994, 59 FR 46562.	
211.2590	Gasoline Dispensing Operation or Gasoline Dispensing Facility.	9/27/1993	9/9/1994, 59 FR 46562.	
211.2610	Gel Coat	1/18/1994	10/21/1996, 61 FR 54556.	
211.2615	General Work Surface	6/25/2010	3/23/2012, 77 FR 16940.	
211.2622	Glass Bonding Primer	9/14/2010	3/23/2012, 77 FR 16940.	
211.2630	Gloss Reducers	5/9/1995	10/26/1995, 60 FR 54807.	
211.2650	Grain	9/27/1993	9/9/1994, 59 FR 46562.	
211.2670	Grain Drying Operation	9/27/1993	9/9/1994, 59 FR 46562.	
211.2690	Grain Handling and Conditioning Operation.	9/27/1993	9/9/1994, 59 FR 46562.	
211.2710	Grain Handling Operation	9/27/1993	9/9/1994, 59 FR 46562.	
211.2730	Green Tire Spraying	9/27/1993	9/9/1994, 59 FR 46562.	
211.2750	Green Tires	9/27/1993	9/9/1994, 59 FR 46562.	
211.2770	Gross Heating Value	9/27/1993	9/9/1994, 59 FR 46562.	
211.2790	Gross Vehicle Weight Rating	9/27/1993	9/9/1994, 59 FR 46562.	
211.2800	Hardwood Plywood	7/27/2011	3/23/2012, 77 FR 16940.	
211.2810	Heated Airless Spray	9/27/1993	9/9/1994, 59 FR 46562.	
211.2825	Heat-Resistant Coating	9/14/2010	3/23/2012, 77 FR 16940.	
211.2830	Heatset	6/25/2010	3/23/2012, 77 FR 16940.	
211.2840	Heatset Web Letterpress Printing Line.	6/25/2010	3/23/2012, 77 FR 16940.	
211.2850	Heatset Web Offset Lithographic Printing Line.	5/9/1995	11/8/1995, 60 FR 56238.	
211.2870	Heavy Liquid	1/28/2013	10/6/2014, 79 FR 60070.	
211.2890	Heavy Metals	9/27/1993	9/9/1994, 59 FR 46562.	
211.2910	Heavy Off Highway Vehicle Products	9/27/1993	9/9/1994, 59 FR 46562.	
211.2930	Heavy Off Highway Vehicle Products Coating.	9/27/1993	9/9/1994, 59 FR 46562.	
211.2950	Heavy Off Highway Vehicle Products Coating Line.	9/27/1993	9/9/1994, 59 FR 46562.	
211.2955	High Bake Coating	9/14/2010	3/23/2012, 77 FR 16940.	
211.2956	High Build Primer Surfacer	9/14/2010	3/23/2012, 77 FR 16940.	
211.2958	High Gloss Coating	9/14/2010	3/23/2012, 77 FR 16940.	
211.2960	High-Performance Architectural Coating.	9/14/2010	3/23/2012, 77 FR 16940.	
211.2965	High Precision Optic	6/25/2010	3/23/2012, 77 FR 16940.	
211.2970	High Temperature Aluminum Coating	9/27/1993	9/9/1994, 59 FR 46562.	
211.2980	High Temperature Coating	9/14/2010	3/23/2012, 77 FR 16940.	
211.2990	High Volume Low Pressure (HVLP) Spray.	9/27/1993	9/9/1994, 59 FR 46562.	
211.3010	Hood	9/27/1993	9/9/1994, 59 FR 46562.	
211.3030	Hot Well	9/27/1993	9/9/1994, 59 FR 46562.	
211.3050	Housekeeping Practices	9/27/1993	9/9/1994, 59 FR 46562.	
211.3070	Incinerator	9/27/1993	9/9/1994, 59 FR 46562.	
211.3090	Indirect Heat Transfer	9/27/1993	9/9/1994, 59 FR 46562.	
211.3095	Indoor Floor Covering Installation Adhesive.	9/14/2010	3/23/2012, 77 FR 16940.	
211.3110	Ink	9/27/1993	9/9/1994, 59 FR 46562.	
211.3120	In-Line Repair	9/14/2010	3/23/2012, 77 FR 16940.	
211.3130	In-Process Tank	9/27/1993	9/9/1994, 59 FR 46562.	
211.3150	In-Situ Sampling Systems	9/27/1993	9/9/1994, 59 FR 46562.	
211.3170	Interior Body Spray Coat	9/27/1993	9/9/1994, 59 FR 46562.	
211.3190	Internal Floating Roof	9/27/1993	9/9/1994, 59 FR 46562.	
211.3210	Internal Transferring Area	9/27/1993	9/9/1994, 59 FR 46562.	
211.3215	Janitorial Cleaning	6/25/2010	3/23/2012, 77 FR 16940.	
211.3230	Lacquers	9/27/1993	9/9/1994, 59 FR 46562.	
211.3240	Laminate	9/14/2010	3/23/2012, 77 FR 16940.	
211.3250	Large Appliance	9/27/1993	9/9/1994, 59 FR 46562.	
211.3270	Large Appliance Coating	9/27/1993	9/9/1994, 59 FR 46562.	
211.3290	Large Appliance Coating Line	9/27/1993	9/9/1994, 59 FR 46562.	
211.3300	Lean-Burn Engine	9/25/2007	6/26/2009, 74 FR 30466.	
211.3305	Letterpress Printing Line	6/25/2010	3/23/2012, 77 FR 16940.	
211.3310	Light Liquid	9/27/1993	9/9/1994, 59 FR 46562.	
211.3330	Light Duty Truck	9/27/1993	9/9/1994, 59 FR 46562.	
211.3350	Light Oil	9/27/1993	9/9/1994, 59 FR 46562.	

EPA-APPROVED ILLINOIS REGULATIONS AND STATUTES—Continued

Illinois citation	Title/subject	State effective date	EPA approval date	Comments
211.3370	Liquid/Gas Method	9/27/1993	9/9/1994, 59 FR 46562.	
211.3390	Liquid Mounted Seal	9/27/1993	9/9/1994, 59 FR 46562.	
211.3410	Liquid Service	9/27/1993	9/9/1994, 59 FR 46562.	
211.3430	Liquids Dripping	9/27/1993	9/9/1994, 59 FR 46562.	
211.3450	Lithographic Printing Line	9/27/1993	9/9/1994, 59 FR 46562.	
211.3470	Load Out Area	9/27/1993	9/9/1994, 59 FR 46562.	
211.3480	Loading Event	10/25/1994	4/3/1995, 60 FR 16801.	
211.3483	Long Dry Kiln	3/15/2001	11/8/2001, 66 FR 56449.	
211.3485	Long Wet Kiln	3/15/2001	11/8/2001, 66 FR 56449.	
211.3487	Low-NO_X Burner	3/15/2001	11/8/2001, 66 FR 56449.	
211.3490	Low Solvent Coating	9/27/1993	9/9/1994, 59 FR 46562.	
211.3505	Lubricating Wax/Compound	9/14/2010	3/23/2012, 77 FR 16940.	
211.3510	Magnet Wire	9/27/1993	9/9/1994, 59 FR 46562.	
211.3530	Magnet Wire Coating	9/27/1993	9/9/1994, 59 FR 46562.	
211.3550	Magnet Wire Coating Line	9/27/1993	9/9/1994, 59 FR 46562.	
211.3555	Maintenance Cleaning	6/25/2010	3/23/2012, 77 FR 16940.	
211.3570	Major Dump Pit	9/27/1993	9/9/1994, 59 FR 46562.	
211.3590	Major Metropolitan Area (MMA)	9/27/1993	9/9/1994, 59 FR 46562.	
211.3610	Major Population Area (MPA)	9/27/1993	9/9/1994, 59 FR 46562.	
211.3630	Manufacturing Process	9/27/1993	9/9/1994, 59 FR 46562.	
211.3650	Marine Terminal	10/25/1994	4/3/1995, 60 FR 16801.	
211.3660	Marine Vessel	10/25/1994	4/3/1995, 60 FR 16801.	
211.3665	Mask Coating	9/14/2010	3/23/2012, 77 FR 16940.	
211.3670	Material Recovery Section	9/27/1993	9/9/1994, 59 FR 46562.	
211.3690	Maximum Theoretical Emissions	9/27/1993	9/9/1994, 59 FR 46562.	
211.3695	Maximum True Vapor Pressure	11/15/1994	8/8/1996, 61 FR 41338.	
211.3705	Medical Device	6/25/2010	3/23/2012, 77 FR 16940.	
211.3707	Medical Device and Pharmaceutical Manufacturing.	6/25/2010	3/23/2012, 77 FR 16940.	
211.3710	Metal Furniture	9/27/1993	9/9/1994, 59 FR 46562.	
211.3730	Metal Furniture Coating	9/27/1993	9/9/1994, 59 FR 46562.	
211.3750	Metal Furniture Coating Line	9/27/1993	9/9/1994, 59 FR 46562.	
211.3760	Metallic Coating	9/14/2010	3/23/2012, 77 FR 16940.	
211.3770	Metallic Shoe Type Seal	9/27/1993	9/9/1994, 59 FR 46562.	
211.3775	Metal to Urethane/Rubber Molding or Casting Adhesive.	9/14/2010	3/23/2012, 77 FR 16940.	
211.3780	Mid-Kiln Firing	3/15/2001	11/8/2001, 66 FR 56449.	
211.3785	Military Specification Coating	9/14/2010	3/23/2012, 77 FR 16940.	
211.3790	Miscellaneous Fabricated Product Manufacturing Process.	9/27/1993	9/9/1994, 59 FR 46562.	
211.3810	Miscellaneous Formulation Manufacturing Process.	9/27/1993	9/9/1994, 59 FR 46562.	
211.3820	Miscellaneous Industrial Adhesive Application Operation.	9/14/2010	3/23/2012, 77 FR 16940.	
211.3830	Miscellaneous Metal Parts and Products.	9/27/1993	9/9/1994, 59 FR 46562.	
211.3850	Miscellaneous Metal Parts and Products Coating.	9/27/1993	9/9/1994, 59 FR 46562.	
211.3870	Miscellaneous Metal Parts or Products Coating Line.	9/27/1993	9/9/1994, 59 FR 46562.	
211.3890	Miscellaneous Organic Chemical Manufacturing Process.	9/27/1993	9/9/1994, 59 FR 46562.	
211.3910	Mixing Operation	9/27/1993	9/9/1994, 59 FR 46562.	
211.3915	Mobile Equipment	5/9/1995	7/25/1996, 61 FR 38577.	
211.3925	Mold Seal Coating	9/14/2010	3/23/2012, 77 FR 16940.	
211.3930	Monitor	9/27/1993	9/9/1994, 59 FR 46562.	
211.3950	Monomer	1/18/1994	10/21/1996, 61 FR 54556.	
211.3960	Motor Vehicles	5/9/1995	7/25/1996, 61 FR 38577.	
211.3961	Motor Vehicle Adhesive	9/14/2010	3/23/2012, 77 FR 16940.	
211.3965	Motor Vehicle Refinishing	5/9/1995	7/25/1996, 61 FR 38577.	
211.3966	Motor Vehicle Weatherstrip Adhesive	9/14/2010	3/23/2012, 77 FR 16940.	
211.3967	Mouth Waterproofing Sealant	9/14/2010	3/23/2012, 77 FR 16940.	
211.3968	Multi-Colored Coating	9/14/2010	3/23/2012, 77 FR 16940.	
211.3969	Multi-Component Coating	9/14/2010	3/23/2012, 77 FR 16940.	
211.3970	Multiple Package Coating	9/27/1993	9/9/1994, 59 FR 46562.	
211.3975	Multipurpose Construction Adhesive	9/14/2010	3/23/2012, 77 FR 16940.	
211.3985	Natural Finish Hardwood Plywood Panel.	7/27/2011	3/23/2012, 77 FR 16940.	
211.3990	New Grain Drying Operation	9/27/1993	9/9/1994, 59 FR 46562.	
211.4010	New Grain Handling Operation	9/27/1993	9/9/1994, 59 FR 46562.	

EPA-APPROVED ILLINOIS REGULATIONS AND STATUTES—Continued

Illinois citation	Title/subject	State effective date	EPA approval date	Comments
211.4030	No Detectable Volatile Organic Material Emissions.	9/27/1993	9/9/1994, 59 FR 46562.	
211.4050	Non-Contact Process Water Cooling Tower.	1/18/1994	10/21/1996, 61 FR 54556.	
211.4052	Non-Convertible Coating	9/14/2010	3/23/2012, 77 FR 16940.	
211.4055	Non-Flexible Coating	5/9/1995	10/26/1995, 60 FR 54807.	
211.4065	Non-Heatset	6/25/2010	3/23/2012, 77 FR 16940.	
211.4067	NO_X Trading Program	4/17/2001	11/8/2001, 66 FR 56449.	
211.4070	Offset	9/27/1993	9/9/1994, 59 FR 46562.	
211.4080	One-Component Coating	9/14/2010	3/23/2012, 77 FR 16940.	
211.4090	One Hundred Percent Acid	9/27/1993	9/9/1994, 59 FR 46562.	
211.4110	One Turn Storage Space	9/27/1993	9/9/1994, 59 FR 46562.	
211.4130	Opacity	9/27/1993	9/9/1994, 59 FR 46562.	
211.4150	Opaque Stains	9/27/1993	9/9/1994, 59 FR 46562.	
211.4170	Open Top Vapor Degreasing	9/27/1993	9/9/1994, 59 FR 46562.	
211.4190	Open Ended Valve	9/27/1993	9/9/1994, 59 FR 46562.	
211.4210	Operator of a Gasoline Dispensing Operation or Operator of a Gasoline Dispensing Facility.	9/27/1993	9/9/1994, 59 FR 46562.	
211.4220	Optical Coating	9/14/2010	3/23/2012, 77 FR 16940.	
211.4230	Organic Compound	9/27/1993	9/9/1994, 59 FR 46562.	
211.4250	Organic Material and Organic Materials.	10/19/1995	3/21/1996, 61 FR 11550.	
211.4260	Organic Solvent	10/19/1995	3/21/1996, 61 FR 11550.	
211.4270	Organic Vapor	9/27/1993	9/9/1994, 59 FR 46562.	
211.4285	Outdoor Floor Covering Installation Adhesive.	9/14/2010	3/23/2012, 77 FR 16940.	
211.4290	Oven	9/27/1993	9/9/1994, 59 FR 46562.	
211.4310	Overall Control	9/27/1993	9/9/1994, 59 FR 46562.	
211.4330	Overvarnish	9/27/1993	9/9/1994, 59 FR 46562.	
211.4350	Owner of a Gasoline Dispensing Operation or Owner of a Gasoline Dispensing Facility.	9/27/1993	9/9/1994, 59 FR 46562.	
211.4370	Owner or Operator	9/27/1993	9/9/1994, 59 FR 46562.	
211.4390	Packaging Rotogravure Printing	9/27/1993	9/9/1994, 59 FR 46562.	
211.4410	Packaging Rotogravure Printing Line	9/27/1993	9/9/1994, 59 FR 46562.	
211.4430	Pail	9/27/1993	9/9/1994, 59 FR 46562.	
211.4450	Paint Manufacturing Source or Paint Manufacturing Plant.	9/27/1993	9/9/1994, 59 FR 46562.	
211.4455	Pan-Backing Coating	9/14/2010	3/23/2012, 77 FR 16940.	
211.4460	Panel	7/27/2011	3/23/2012, 77 FR 16940.	
211.4470	Paper Coating	9/27/1993	9/9/1994, 59 FR 46562.	
211.4490	Paper Coating Line	9/27/1993	9/9/1994, 59 FR 46562.	
211.4510	Particulate Matter	9/27/1993	9/9/1994, 59 FR 46562.	
211.4530	Parts per Million (Volume) or Ppm (VOL).	9/27/1993	9/9/1994, 59 FR 46562.	
211.4540	Perimeter Bonded Sheet Flooring	9/14/2010	3/23/2012, 77 FR 16940.	
211.4550	Person	9/27/1993	9/9/1994, 59 FR 46562.	
211.4590	Petroleum	9/27/1993	9/9/1994, 59 FR 46562.	
211.4610	Petroleum Liquid	10/19/1995	3/21/1996, 61 FR 11550.	
211.4630	Petroleum Refinery	9/27/1993	9/9/1994, 59 FR 46562.	
211.4650	Pharmaceutical	9/27/1993	9/9/1994, 59 FR 46562.	
211.4670	Pharmaceutical Coating Operation	9/27/1993	9/9/1994, 59 FR 46562.	
211.4690	Photochemically Reactive Material	9/27/1993	9/9/1994, 59 FR 46562.	
211.4710	Pigmented Coatings	9/27/1993	9/9/1994, 59 FR 46562.	
211.4730	Plant	9/27/1993	9/9/1994, 59 FR 46562.	
211.4735	Plastic	9/14/2010	3/23/2012, 77 FR 16940.	
211.4740	Plastic Part	5/9/1995	10/26/1995, 60 FR 54807.	
211.4750	Plasticizers	9/27/1993	9/9/1994, 59 FR 46562.	
211.4760	Plastic Solvent Welding Adhesive	9/14/2010	3/23/2012, 77 FR 16940.	
211.4765	Plastic Solvent Welding Adhesive Primer.	9/14/2010	3/23/2012, 77 FR 16940.	
211.4768	Pleasure Craft	9/14/2010	3/23/2012, 77 FR 16940.	
211.4769	Pleasure Craft Surface Coating	9/14/2010	3/23/2012, 77 FR 16940.	
211.4770	PM 10	9/27/1993	9/9/1994, 59 FR 46562.	
211.4790	Pneumatic Rubber Tire Manufacture	9/27/1993	9/9/1994, 59 FR 46562.	
211.4810	Polybasic Organic Acid Partial Oxidation Manufacturing Process.	9/27/1993	9/9/1994, 59 FR 46562.	
211.4830	Polyester Resin Material(s)	1/18/1994	10/21/1996, 61 FR 54556.	
211.4850	Polyester Resin Products Manufacturing Process.	1/18/1994	10/21/1996, 61 FR 54556.	

EPA-APPROVED ILLINOIS REGULATIONS AND STATUTES—Continued

Illinois citation	Title/subject	State effective date	EPA approval date	Comments
211.4870	Polystyrene Plant	9/27/1993	9/9/1994, 59 FR 46562.	
211.4890	Polystyrene Resin	9/27/1993	9/9/1994, 59 FR 46562.	
211.4895	Polyvinyl Chloride Plastic (PVC Plastic).	9/14/2010	3/23/2012, 77 FR 16940.	
211.4900	Porous Material	9/14/2010	3/23/2012, 77 FR 16940.	
211.4910	Portable Grain Handling Equipment	9/27/1993	9/9/1994, 59 FR 46562.	
211.4930	Portland Cement Manufacturing Process Emission Source.	9/27/1993	9/9/1994, 59 FR 46562.	
211.4950	Portland Cement Process or Portland Cement Manufacturing Plant.	9/27/1993	9/9/1994, 59 FR 46562.	
211.4970	Potential To Emit	1/18/1994	10/21/1996, 61 FR 54556.	
211.4990	Power Driven Fastener Coating	9/27/1993	9/9/1994, 59 FR 46562.	
211.5010	Precoat	5/9/1995	7/25/1996, 61 FR 38577.	
211.5012	Prefabricated Architectural Coating	9/14/2010	3/23/2012, 77 FR 16940.	
211.5015	Preheater Kiln	3/15/2001	11/8/2001, 66 FR 56449.	
211.5020	Preheater/Precalciner Kiln	3/15/2001	11/8/2001, 66 FR 56449.	
211.5030	Pressure Release	9/27/1993	9/9/1994, 59 FR 46562.	
211.5050	Pressure Tank	9/27/1993	9/9/1994, 59 FR 46562.	
211.5060	Pressure/Vacuum Relief Valve	9/21/1994	1/27/1995, 60 FR 5318.	
211.5061	Pretreatment Coating	9/14/2010	3/23/2012, 77 FR 16940.	
211.5062	Pretreatment Wash Primer	9/14/2010	3/23/2012, 77 FR 16940.	
211.5065	Primary Product	5/9/1995	3/23/1998, 63 FR 13784.	
211.5070	Prime Coat	9/27/1993	9/9/1994, 59 FR 46562.	
211.5075	Primer Sealant	9/14/2010	3/23/2012, 77 FR 16940.	
211.5080	Primer Sealer	5/9/1995	7/25/1996, 61 FR 38577.	
211.5090	Primer Surfacer Coat	9/14/2010	3/23/2012, 77 FR 16940.	
211.5110	Primer Surfacer Operation	9/27/1993	9/9/1994, 59 FR 46562.	
211.5130	Primers	9/27/1993	9/9/1994, 59 FR 46562.	
211.5140	Printed Interior Panel	7/27/2011	3/23/2012, 77 FR 16940.	
211.5150	Printing	9/27/1993	9/9/1994, 59 FR 46562.	
211.5170	Printing Line	9/27/1993	9/9/1994, 59 FR 46562.	
211.5185	Process Emission Source	9/27/1993	9/9/1994, 59 FR 46562.	
211.5190	Process Emission Unit	9/27/1993	9/9/1994, 59 FR 46562.	
211.5210	Process Unit	9/27/1993	9/9/1994, 59 FR 46562.	
211.5230	Process Unit Shutdown	9/27/1993	9/9/1994, 59 FR 46562.	
211.5245	Process Vent	5/22/1995	4/2/1996, 61 FR 14484.	
211.5250	Process Weight Rate	9/27/1993	9/9/1994, 59 FR 46562.	
211.5270	Production Equipment Exhaust System.	9/27/1993	9/9/1994, 59 FR 46562.	
211.5310	Publication Rotogravure Printing Line	9/27/1993	9/9/1994, 59 FR 46562.	
211.5330	Purged Process Fluid	9/27/1993	9/9/1994, 59 FR 46562.	
211.5335	Radiation Effect Coating	6/25/2010	3/23/2012, 77 FR 16940.	
211.5350	Reactor	9/27/1993	9/9/1994, 59 FR 46562.	
211.5370	Reasonably Available Control Technology (RACT).	9/27/1993	9/9/1994, 59 FR 46562.	
211.5390	Reclamation System	1/18/1994	10/21/1996, 61 FR 54556.	
211.5400	Red Coating	9/14/2010	3/23/2012, 77 FR 16940.	
211.5410	Refiner	9/27/1993	9/9/1994, 59 FR 46562.	
211.5430	Refinery Fuel Gas	9/27/1993	9/9/1994, 59 FR 46562.	
211.5450	Refinery Fuel Gas System	9/27/1993	9/9/1994, 59 FR 46562.	
211.5470	Refinery Unit or Refinery Process Unit.	9/27/1993	9/9/1994, 59 FR 46562.	
211.5480	Reflective Argent Coating	5/9/1995	10/26/1995, 60 FR 54807.	
211.5490	Refrigerated Condenser	9/27/1993	9/9/1994, 59 FR 46562.	
211.5500	Regulated Air Pollutant	12/7/1993	4/5/1995, 60 FR 17229.	
211.5510	Reid Vapor Pressure	1/28/2013	10/6/2014, 79 FR 60070.	
211.5520	Reinforced Plastic Composite	9/14/2010	3/23/2012, 77 FR 16940.	
211.5530	Repair	1/18/1994	10/21/1996, 61 FR 54556.	
211.5535	Repair Cleaning	6/25/2010	3/23/2012, 77 FR 16940.	
211.5550	Repair Coat	9/14/2010	3/23/2012, 77 FR 16940.	
211.5570	Repaired	9/27/1993	9/9/1994, 59 FR 46562.	
211.5585	Research and Development Operation.	6/25/2010	3/23/2012, 77 FR 16940.	
211.5590	Residual Fuel Oil	9/27/1993	9/9/1994, 59 FR 46562.	
211.5600	Resist Coat	5/9/1995	10/26/1995, 60 FR 54807.	
211.5610	Restricted Area	9/27/1993	9/9/1994, 59 FR 46562.	
211.5630	Retail Outlet	9/27/1993	9/9/1994, 59 FR 46562.	
211.5640	Rich-Burn Engine	9/25/2007	6/26/2009, 74 FR 30466.	
211.5650	Ringelmann Chart	9/27/1993	9/9/1994, 59 FR 46562.	
211.5670	Roadway	9/27/1993	9/9/1994, 59 FR 46562.	

EPA-APPROVED ILLINOIS REGULATIONS AND STATUTES—Continued

Illinois citation	Title/subject	State effective date	EPA approval date	Comments
211.5690	Roll Coater	9/27/1993	9/9/1994, 59 FR 46562.	
211.5710	Roll Coating	9/27/1993	9/9/1994, 59 FR 46562.	
211.5730	Roll Printer	9/27/1993	9/9/1994, 59 FR 46562.	
211.5750	Roll Printing	9/27/1993	9/9/1994, 59 FR 46562.	
211.5770	Rotogravure Printing	9/27/1993	9/9/1994, 59 FR 46562.	
211.5790	Rotogravure Printing Line	9/27/1993	9/9/1994, 59 FR 46562.	
211.5800	Rubber	9/14/2010	3/23/2012, 77 FR 16940.	
211.5810	Safety Relief Valve	9/27/1993	9/9/1994, 59 FR 46562.	
211.5830	Sandblasting	9/27/1993	9/9/1994, 59 FR 46562.	
211.5850	Sanding Sealers	9/27/1993	9/9/1994, 59 FR 46562.	
211.5860	Scientific Instrument	6/25/2010	3/23/2012, 77 FR 16940.	
211.5870	Screening	9/27/1993	9/9/1994, 59 FR 46562.	
211.5875	Screen Printing	6/25/2010	3/23/2012, 77 FR 16940.	
211.5885	Screen Reclamation	6/25/2010	3/23/2012, 77 FR 16940.	
211.5890	Sealer	9/14/2010	3/23/2012, 77 FR 16940.	
211.5910	Semi Transparent Stains	9/27/1993	9/9/1994, 59 FR 46562.	
211.5930	Sensor	9/27/1993	9/9/1994, 59 FR 46562.	
211.5950	Set of Safety Relief Valves	9/27/1993	9/9/1994, 59 FR 46562.	
211.5970	Sheet Basecoat	9/27/1993	9/9/1994, 59 FR 46562.	
211.5980	Sheet-Fed	5/9/1995	11/8/1995, 60 FR 56238.	
211.5985	Sheet Rubber Lining Installation	9/14/2010	3/23/2012, 77 FR 16940.	
211.5987	Shock-Free Coating	9/14/2010	3/23/2012, 77 FR 16940.	
211.5990	Shotblasting	9/27/1993	9/9/1994, 59 FR 46562.	
211.6010	Side Seam Spray Coat	9/27/1993	9/9/1994, 59 FR 46562.	
211.6012	Silicone-Release Coating	9/14/2010	3/23/2012, 77 FR 16940.	
211.6015	Single-Ply Roof Membrane	9/14/2010	3/23/2012, 77 FR 16940.	
211.6017	Single-Ply Roof Membrane Adhesive Primer.	9/14/2010	3/23/2012, 77 FR 16940.	
211.6020	Single-Ply Roof Membrane Installation and Repair Adhesive.	9/14/2010	3/23/2012, 77 FR 16940.	
211.6025	Single Unit Operation	5/22/1995	4/2/1996, 61 FR 14484.	
211.6030	Smoke	9/27/1993	9/9/1994, 59 FR 46562.	
211.6050	Smokeless Flare	9/27/1993	9/9/1994, 59 FR 46562.	
211.6060	Soft Coat	5/9/1995	10/26/1995, 60 FR 54807.	
211.6063	Solar-Absorbent Coating	9/14/2010	3/23/2012, 77 FR 16940.	
211.6065	Solids Turnover Ratio (R_T)	9/14/2010	3/23/2012, 77 FR 16940.	
211.6070	Solvent	9/27/1993	9/9/1994, 59 FR 46562.	
211.6090	Solvent Cleaning	9/27/1993	9/9/1994, 59 FR 46562.	
211.6110	Solvent Recovery System	1/18/1994	10/21/1996, 61 FR 54556.	
211.6130	Source	4/17/2001	11/8/2001, 66 FR 56449.	
211.6140	Specialty Coatings	5/9/1995	10/26/1995, 60 FR 54807.	
211.6145	Specialty Coatings for Motor Vehicles.	5/9/1995	7/25/1996, 61 FR 38577.	
211.6150	Specialty High Gloss Catalyzed Coating.	9/27/1993	9/9/1994, 59 FR 46562.	
211.6170	Specialty Leather	1/18/1994	10/21/1996, 61 FR 54556.	
211.6190	Specialty Soybean Crushing Source	9/27/1993	9/9/1994, 59 FR 46562.	
211.6210	Splash Loading	9/27/1993	9/9/1994, 59 FR 46562.	
211.6230	Stack	9/27/1993	9/9/1994, 59 FR 46562.	
211.6250	Stain Coating	1/18/1994	10/21/1996, 61 FR 54556.	
211.6270	Standard Conditions	9/27/1993	9/9/1994, 59 FR 46562.	
211.6290	Standard Cubic Foot (Scf)	9/27/1993	9/9/1994, 59 FR 46562.	
211.6310	Start Up	9/27/1993	9/9/1994, 59 FR 46562.	
211.6330	Stationary Emission Source	9/27/1993	9/9/1994, 59 FR 46562.	
211.6350	Stationary Emission Unit	9/27/1993	9/9/1994, 59 FR 46562.	
211.6370	Stationary Source	9/27/1993	9/9/1994, 59 FR 46562.	
211.6390	Stationary Storage Tank	9/27/1993	9/9/1994, 59 FR 46562.	
211.6400	Stencil Coat	9/14/2010	3/23/2012, 77 FR 16940.	
211.6405	Sterilization Indicating Ink	6/25/2010	3/23/2012, 77 FR 16940.	
211.6410	Storage Tank or Storage Vessel	9/27/1993	9/9/1994, 59 FR 46562.	
211.6420	Strippable Spray Booth Coating	2/2/1998	5/19/1998, 63 FR 27489.	
211.6425	Stripping	6/25/2010	3/23/2012, 77 FR 16940.	
211.6427	Structural Glazing	9/14/2010	3/23/2012, 77 FR 16940.	
211.6430	Styrene Devolatilizer Unit	9/27/1993	9/9/1994, 59 FR 46562.	
211.6450	Styrene Recovery Unit	9/27/1993	9/9/1994, 59 FR 46562.	
211.6460	Subfloor	9/14/2010	3/23/2012, 77 FR 16940.	
211.6470	Submerged Loading Pipe	9/27/1993	9/9/1994, 59 FR 46562.	
211.6490	Substrate	9/27/1993	9/9/1994, 59 FR 46562.	
211.6510	Sulfuric Acid Mist	9/27/1993	9/9/1994, 59 FR 46562.	
211.6530	Surface Condenser	9/27/1993	9/9/1994, 59 FR 46562.	

EPA-APPROVED ILLINOIS REGULATIONS AND STATUTES—Continued

Illinois citation	Title/subject	State effective date	EPA approval date	Comments
211.6535	Surface Preparation	6/25/2010	3/23/2012, 77 FR 16940.	
211.6540	Surface Preparation Materials	5/9/1995	7/25/1996, 61 FR 38577.	
211.6550	Synthetic Organic Chemical or Polymer Manufacturing Plant.	9/27/1993	9/9/1994, 59 FR 46562.	
211.6570	Tablet Coating Operation	9/27/1993	9/9/1994, 59 FR 46562.	
211.6580	Texture Coat	5/9/1995	10/26/1995, 60 FR 54807.	
211.6585	Thin Metal Laminating Adhesive	9/14/2010	3/23/2012, 77 FR 16940.	
211.6587	Thin Particleboard	7/27/2011	3/23/2012, 77 FR 16940.	
211.6590	Thirty Day Rolling Average	9/27/1993	9/9/1994, 59 FR 46562.	
211.6610	Three Piece Can	9/27/1993	9/9/1994, 59 FR 46562.	
211.6620	Three or Four Stage Coating System	5/9/1995	7/25/1996, 61 FR 38577.	
211.6630	Through-the-Valve Fill	1/18/1994	10/21/1996, 61 FR 54556.	
211.6635	Tileboard	7/27/2011	3/23/2012, 77 FR 16940.	
211.6640	Tire Repair	9/14/2010	3/23/2012, 77 FR 16940.	
211.6650	Tooling Resin	1/18/1994	10/21/1996, 61 FR 54556.	
211.6670	Topcoat	9/14/2010	3/23/2012, 77 FR 16940.	
211.6690	Topcoat Operation	9/14/2010	3/23/2012, 77 FR 16940.	
211.6695	Topcoat System	5/9/1995	7/25/1996, 61 FR 38577.	
211.6710	Touch-Up	1/18/1994	10/21/1996, 61 FR 54556.	
211.6720	Touch-Up Coating	9/14/2010	3/23/2012, 77 FR 16940.	
211.6730	Transfer Efficiency	9/27/1993	9/9/1994, 59 FR 46562.	
211.6740	Translucent Coating	9/14/2010	3/23/2012, 77 FR 16940.	
211.6750	Tread End Cementing	9/27/1993	9/9/1994, 59 FR 46562.	
211.6770	True Vapor Pressure	9/27/1993	9/9/1994, 59 FR 46562.	
211.6780	Trunk Interior Coating	9/14/2010	3/23/2012, 77 FR 16940.	
211.6790	Turnaround	9/27/1993	9/9/1994, 59 FR 46562.	
211.6810	Two Piece Can	9/27/1993	9/9/1994, 59 FR 46562.	
211.6825	Underbody Coating	9/14/2010	3/23/2012, 77 FR 16940.	
211.6830	Under-the-Cup Fill	1/18/1994	10/21/1996, 61 FR 54556.	
211.6850	Undertread Cementing	9/27/1993	9/9/1994, 59 FR 46562.	
211.6860	Uniform Finish Blender	5/9/1995	7/25/1996, 61 FR 38577.	
211.6870	Unregulated Safety Relief Valve	9/27/1993	9/9/1994, 59 FR 46562.	
211.6880	Vacuum Metallizing	5/9/1995	10/26/1995, 60 FR 54807.	
211.6885	Vacuum Metalizing Coating	9/14/2010	3/23/2012, 77 FR 16940.	
211.6890	Vacuum Producing System	9/27/1993	9/9/1994, 59 FR 46562.	
211.6910	Vacuum Service	9/27/1993	9/9/1994, 59 FR 46562.	
211.6930	Valves Not Externally Regulated	9/27/1993	9/9/1994, 59 FR 46562.	
211.6950	Vapor Balance System	9/27/1993	9/9/1994, 59 FR 46562.	
211.6970	Vapor Collection System	10/25/1994	4/3/1995, 60 FR 16801.	
211.6990	Vapor Control System	10/25/1994	4/3/1995, 60 FR 16801.	
211.7010	Vapor Mounted Primary Seal	9/27/1993	9/9/1994, 59 FR 46562.	
211.7030	Vapor Recovery System	9/27/1993	9/9/1994, 59 FR 46562.	
211.7050	Vapor-Suppressed Polyester Resin	1/18/1994	10/21/1996, 61 FR 54556.	
211.7070	Vinyl Coating	9/27/1993	9/9/1994, 59 FR 46562.	
211.7090	Vinyl Coating Line	9/27/1993	9/9/1994, 59 FR 46562.	
211.7110	Volatile Organic Liquid (VOL)	9/27/1993	9/9/1994, 59 FR 46562.	
211.7130	Volatile Organic Material Content (VOMC).	9/27/1993	9/9/1994, 59 FR 46562.	
211.7150	Volatile Organic Material (VOM) Or Volatile Organic Compound (VOC).	1/23/2017	5/24/2018, 83 FR 24030.	
211.7170	Volatile Petroleum Liquid	9/27/1993	9/9/1994, 59 FR 46562.	
211.7190	Wash Coat	9/27/1993	9/9/1994, 59 FR 46562.	
211.7200	Washoff Operations	2/2/1998	5/19/1998, 63 FR 27489.	
211.7210	Wastewater (Oil/Water) Separator	9/27/1993	9/9/1994, 59 FR 46562.	
211.7220	Waterproof Resorcinol Glue	9/14/2010	3/23/2012, 77 FR 16940.	
211.7230	Weak Nitric Acid Manufacturing Process.	9/27/1993	9/9/1994, 59 FR 46562.	
211.7240	Weatherstrip Adhesive	9/14/2010	3/23/2012, 77 FR 16940.	
211.7250	Web	9/27/1993	9/9/1994, 59 FR 46562.	
211.7270	Wholesale Purchase Consumer	9/27/1993	9/9/1994, 59 FR 46562.	
211.7290	Wood Furniture	6/25/2010	3/23/2012, 77 FR 16940.	
211.7310	Wood Furniture Coating	9/27/1993	9/9/1994, 59 FR 46562.	
211.7330	Wood Furniture Coating Line	9/27/1993	9/9/1994, 59 FR 46562.	
211.7350	Woodworking	9/27/1993	9/9/1994, 59 FR 46562.	
Part 212: Visible and Particulate Matter Emissions				
Subpart A: General				
212.107	Measurement Method for Visible Emissions.	5/22/1996	3/11/1998, 63 FR 11842.	

EPA-APPROVED ILLINOIS REGULATIONS AND STATUTES—Continued

Illinois citation	Title/subject	State effective date	EPA approval date	Comments
212.108	Measurement Methods for PM–10 Emissions and Condensible PM–10 Emissions.	5/22/1996	3/11/1998, 63 FR 11842.	
212.109	Measurement Methods for Opacity	5/22/1996	3/11/1998, 63 FR 11842.	
212.110	Measurement Methods for Particulate Matter.	5/22/1996	3/11/1998, 63 FR 11842.	
212.111	Abbreviations and Units	10/4/1991	10/21/1993, 58 FR 54291.	
212.113	Incorporations by Reference	5/22/1996	7/14/1999, 64 FR 37847.	
Subpart B: Visible Emissions				
212.121	Opacity Standards	7/13/1988	12/29/1992, 57 FR 61834.	
212.122	Visible Emissions Limitations for Certain Emission Units for Which Construction or Modification Commenced on or After April 14, 1972.	7/13/1988	12/29/1992, 57 FR 61834.	
212.123	Visible Emissions Limitations for All Other Emission Units.	7/13/1988	12/29/1992, 57 FR 61834.	
212.124	Exceptions	7/13/1988	12/29/1992, 57 FR 61834.	
212.125	Determination of Violations	7/13/1988	12/29/1992, 57 FR 61834.	
212.126	Adjusted Opacity Standards Procedures.	7/13/1988	12/29/1992, 57 FR 61834.	
Subpart D: Particulate Matter Emissions From Incinerators				
212.181	Limitations for Incinerators	6/4/1980	11/27/1981, 46 FR 57893.	
212.182	Aqueous Waste Incinerators	6/4/1980	11/27/1981, 46 FR 57893.	
212.183	Certain Wood Waste Incinerators	6/4/1980	11/27/1981, 46 FR 57893.	
212.184	Explosive Waste Incinerators	6/4/1980	11/27/1981, 46 FR 57893.	
212.185	Continuous Automatic Stoking Animal Pathological Waste Incinerators.	12/30/1986	9/15/1993, 58 FR 48312.	
Subpart E: Particulate Matter Emissions From Fuel Combustion Emission Units				
212.201	Emission Units for Which Construction or Modification Commenced Prior to April 14, 1972, Using Solid Fuel Exclusively Located in the Chicago Area.	7/9/1986	12/29/1992, 57 FR 61834.	
212.202	Emission Units for Which Construction or Modification Commenced Prior to April 14, 1972, Using Solid Fuel Exclusively Located Outside the Chicago Area.	7/9/1986	12/29/1992, 57 FR 61834.	
212.203	Controlled Emission Units for Which Construction or Modification Commenced Prior to April 14, 1972, Using Solid Fuel Exclusively.	7/9/1986	12/29/1992, 57 FR 61834.	
212.204	Emission Units for Which Construction or Modification Commenced on or After April 14, 1972, Using Solid Fuel Exclusively.	7/9/1986	12/29/1992, 57 FR 61834.	
212.205	Coal-Fired Industrial Boilers for Which Construction or Modification Commenced Prior to April 14, 1972, Equipped With Flue Gas Desulfurization Systems.	10/19/1981	2/22/1984, 49 FR 6490.	
212.206	Emission Units Using Liquid Fuel Exclusively.	4/14/1972	5/31/1972, 37 FR 10842.	
212.207	Emission Units Using More Than One Type of Fuel.	4/14/1972	5/31/1972, 37 FR 10842.	
212.208	Aggregation of Emission Units for Which Construction or Modification Commenced Prior to April 14, 1972.	4/14/1972	5/31/1972, 37 FR 10842.	
212.210	Emissions Limitations for Certain Fuel Combustion Emission Units Located in the Vicinity of Granite City.	5/22/1996	7/14/1999, 64 FR 37847.	

EPA-APPROVED ILLINOIS REGULATIONS AND STATUTES—Continued

Illinois citation	Title/subject	State effective date	EPA approval date	Comments
Subpart K: Fugitive Particulate Matter				
212.301	Fugitive Particulate Matter	10/26/1979	2/21/1980, 45 FR 11472.	
212.302	Geographical Areas of Application	5/22/1996	7/14/1999, 64 FR 37847.	
212.304	Storage Piles	10/26/1979	4/26/1982, 47 FR 17814.	
212.305	Conveyor Loading Operations	10/26/1979	4/26/1982, 47 FR 17814.	
212.306	Traffic Areas	10/26/1979	2/21/1980, 45 FR 11472.	
212.307	Materials Collected by Pollution Control Equipment.	10/26/1979	2/21/1980, 45 FR 11472.	
212.308	Spraying or Choke-Feeding Required	10/26/1979	2/21/1980, 45 FR 11472.	
212.309	Operating Program	5/22/1996	7/14/1999, 64 FR 37847.	
212.310	Minimum Operating Program	10/26/1979	2/21/1980, 45 FR 11472.	
212.312	Amendment to Operating Program	10/26/1979	2/21/1980, 45 FR 11472.	
212.313	Emission Standard for Particulate Collection Equipment.	10/26/1979	2/21/1980, 45 FR 11472.	
212.314	Exception for Excess Wind Speed	10/26/1979	2/21/1980, 45 FR 11472.	
212.315	Covering for Vehicles	10/26/1979	2/21/1980, 45 FR 11472.	
212.316	Emissions Limitations for Emission Units in Certain Areas.	5/22/1996	7/14/1999, 64 FR 37847.	
Subpart L: Particulate Matter Emissions From Process Emission Units				
212.321	Process Emission Units for Which Construction or Modification Commenced on or After April 14, 1972.	9/28/1979	2/21/1980, 45 FR 11472.	
212.322	Process Emission Units for Which Construction or Modification Commenced Prior to April 14, 1972.	9/28/1979	2/21/1980, 45 FR 11472.	
212.323	Stock Piles	9/28/1979	2/21/1980, 45 FR 11472.	
212.324	Process Emission Units in Certain Areas.	5/22/1996	3/11/1998, 63 FR 11842.	
Subpart N: Food Manufacturing				
212.361	Corn Wet Milling Processes	9/28/1979	2/21/1980, 45 FR 11472.	
212.362	Emission Units in Certain Areas	5/22/1996	3/11/1998, 63 FR 11842.	
Subpart O: Petroleum Refining, Petrochemical and Chemical Manufacturing				
212.381	Catalyst Regenerators of Fluidized Catalytic Converters.	9/28/1979	2/21/1980, 45 FR 11472.	
Subpart Q: Stone, Clay, Glass and Concrete Manufacturing				
212.421	Portland Cement Processes for Which Construction or Modification Commenced on or After April 14, 1972.	4/14/1972	5/31/1972, 37 FR 10842.	
212.422	Portland Cement Manufacturing Processes.	9/28/1979	2/21/1980, 45 FR 11472.	
212.423	Emission Limits for the Portland Cement Manufacturing Plant Located in LaSalle County, South of the Illinois River.	10/4/1991	10/21/1993, 58 FR 54291.	
212.424	Fugitive Particulate Matter Control for the Portland Cement Manufacturing Plant and Associated Quarry Operations Located in LaSalle County, South of the Illinois River.	5/15/1992	1/12/1993, 58 FR 3844.	
212.425	Emission Units in Certain Areas	5/22/1996	3/11/1998, 63 FR 11842.	
Subpart R: Primary and Fabricated Metal Products and Machinery Manufacture				
212.441	Steel Manufacturing Processes	9/28/1979	2/21/1980, 45 FR 11472.	
212.442	Beehive Coke Ovens	9/28/1979	2/21/1980, 45 FR 11472.	
212.443	Coke Plants	5/15/1992	1/12/1993, 58 FR 3844.	
212.444	Sinter Processes	9/28/1979	9/3/1981, 46 FR 44172.	
212.445	Blast Furnace Cast Houses	5/15/1992	1/12/1993, 58 FR 3844.	
212.446	Basic Oxygen Furnaces	5/22/1996	3/11/1998, 63 FR 11842.	
212.447	Hot Metal Desulfurization Not Located in the BOF.	9/28/1979	9/3/1981, 46 FR 44172.	

EPA-APPROVED ILLINOIS REGULATIONS AND STATUTES—Continued

Illinois citation	Title/subject	State effective date	EPA approval date	Comments
212.448	Electric Arc Furnaces	9/28/1979	9/3/1981, 46 FR 44172.	
212.449	Argon-Oxygen Decarburization Vessels.	9/28/1979	9/3/1981, 46 FR 44172.	
212.450	Liquid Steel Charging	9/28/1979	9/3/1981, 46 FR 44172.	
212.451	Hot Scarfing Machines	9/28/1979	9/3/1981, 46 FR 44172.	
212.455	Highlines on Steel Mills	10/26/1979	2/21/1980, 45 FR 11472.	
212.456	Certain Small Foundries	9/28/1979	2/21/1980, 45 FR 11472.	
212.457	Certain Small Iron-Melting Air Furnaces.	9/28/1979	7/12/1982, 47 FR 30057.	
212.458	Emission Units in Certain Areas	5/22/1996	3/11/1998, 63 FR 11842.	
Subpart S: Agriculture				
212.461	Grain-Handling and Drying in General.	9/28/1979	2/21/1980, 45 FR 11472.	
212.462	Grain-Handling Operations	9/28/1979	2/21/1980, 45 FR 11472.	
212.463	Grain Drying Operations	9/28/1979	2/21/1980, 45 FR 11472.	
212.464	Sources in Certain Areas	5/22/1996	3/11/1998, 63 FR 11842.	
Subpart T: Construction and Wood Products				
212.681	Grinding, Woodworking, Sandblasting and Shotblasting.	4/14/1972	5/31/1972, 37 FR 10842.	
Subpart U: Additional Control Measures				
212.700	Applicability	7/11/1994	7/13/1995, 60 FR 36060.	
212.701	Contingency Measure Plans, Submittal and Compliance Date.	7/11/1994	7/13/1995, 60 FR 36060.	
212.702	Determination of Contributing Sources.	7/11/1994	7/13/1995, 60 FR 36060.	
212.703	Contingency Measure Plan Elements	7/11/1994	7/13/1995, 60 FR 36060.	
212.704	Implementation	7/11/1994	7/13/1995, 60 FR 36060.	
212.705	Alternative Implementation	7/11/1994	7/13/1995, 60 FR 36060.	
212.Appendix C:	Past Compliance Dates	4/14/1972	5/31/1972, 37 FR 10842	Approved as Rules 202(e), 203(c), 203(d)(3)(A) & (B), 203(d)(5)(L) & (M), 203(d)(8)(J), 203(f)(3) Preamble, 203(f)(3)(F) Preamble, and 203(i).
Part 214: Sulfur Limitations				
Subpart A: General Provisions				
214.101	Measurement Methods	12/7/2015	2/1/2018, 83 FR 4591.	
214.102	Abbreviations and Units	12/7/2015	2/1/2018, 83 FR 4591.	
214.103	Definitions	12/7/2015	2/1/2018, 83 FR 4591.	
214.104	Incorporations by Reference	12/7/2015	2/1/2018, 83 FR 4591.	
Subpart B: New Fuel Combustion Emission Sources				
214.121	Large Sources	12/7/2015	2/1/2018, 83 FR 4591.	
214.122	Small Sources	12/7/2015	2/1/2018, 83 FR 4591.	
Subpart C: Existing Solid Fuel Combustion Emission Sources				
214.141	Sources Located in Metropolitan Areas.	3/28/1983	9/3/1992, 57 FR 40333	thru (a).
214.141	Sources Located in Metropolitan Areas.	5/20/1986	9/2/1992, 57 FR 40126	(b), (c), and (d).
214.142	Small Sources Located Outside Metropolitan Areas.	4/14/1972	5/31/1972, 37 FR 10842	Approved as Rule 204(c)(1)(B).
214.143	Large Sources Located Outside Metropolitan Areas.	2/3/1979	2/21/1980, 45 FR 11472.	
Subpart D: Existing Liquid or Mixed Fuel Combustion Emission Sources				
214.161	Liquid Fuel Burned Exclusively	12/7/2015	2/1/2018, 83 FR 4591.	

EPA-APPROVED ILLINOIS REGULATIONS AND STATUTES—Continued

Illinois citation	Title/subject	State effective date	EPA approval date	Comments
214.162	Combination of Fuels	12/7/2015	2/1/2018, 83 FR 4591.	
Subpart E: Aggregation of Sources Outside Metropolitan Areas				
214.181	Dispersion Enhancement Techniques	2/3/1979	2/21/1980, 45 FR 11472.	
214.182	Prohibition	2/3/1979	2/21/1980, 45 FR 11472	Approved as Rule 204(e) (intro).
214.183	General Formula	2/3/1979	2/21/1980, 45 FR 11472	Approved as Rule 204(e)(1).
214.184	Special Formula	2/3/1979	2/21/1980, 45 FR 11472	Approved as Rule 204(e)(2).
214.185	Alternative Emission Rate	2/3/1979	2/21/1980, 45 FR 11472	Approved as Rule 204(e)(3).
214.186	New Operating Permits	2/3/1979	2/21/1980, 45 FR 11472	Approved as Rule 204(e)(4).
Subpart F: Alternative Standards for Sources Inside Metropolitan Areas				
214.201	Alternative Standards for Sources in Metropolitan Areas.	12/7/2015	2/1/2018, 83 FR 4591.	
214.202	Dispersion Enhancement Techniques	3/28/1983	9/3/1992, 57 FR 40333.	
Subpart K: Process Emission Sources				
214.300	Scope	12/7/2015	2/1/2018, 83 FR 4591.	
214.301	General Limitation	2/3/1979	2/21/1980, 45 FR 11472	Approved as Rule 204(f)(1)(A).
214.302	Exception for Air Pollution Control Equipment.	4/14/1972	5/31/1972, 37 FR 10842	Approved as Rule 204(f)(1)(C).
214.303	Use of Sulfuric Acid	2/3/1979	2/21/1980, 45 FR 11472	Approved as Rule 204(f)(2)(B).
214.305	Fuel Sulfur Content Limitations	12/7/2015	2/1/2018, 83 FR 4591.	
Subpart O: Petroleum Refining, Petrochemical and Chemical Manufacturing				
214.381	Sulfuric Acid Manufacturing	2/3/1979	2/21/1980, 45 FR 11472	Only (a) and (b). Approved as Rule 204(f)(1)(B) and (f)(2)(A).
214.382	Petroleum and Petrochemical Processes.	12/5/1988	1/28/1994, 59 FR 4001.	
214.383	Chemical Manufacturing	2/3/1979	2/21/1980, 45 FR 11472	Approved as Rule 204(f)(1)(E).
Subpart Q: Primary and Secondary Metal Manufacturing				
214.421	Combination of Fuels at Steel Mills in Metropolitan Areas.	12/7/2015	2/1/2018, 83 FR 4591.	
Subpart X: Utilities				
214.560	Scope	5/20/1986	9/2/1992, 57 FR 40126.	
214.561	E. D. Edwards Electric Generating Station.	7/11/2003	11/10/2008, 73 FR 66555.	
Subpart AA: Requirements for Certain SO_2 Sources				
214.600	Definitions	12/7/2015	2/1/2018, 83 FR 4591.	
214.601	Applicability	12/7/2015	2/1/2018, 83 FR 4591.	
214.602	Compliance Deadline	12/7/2015	2/1/2018, 83 FR 4591.	
214.603	Emission Limitations	12/7/2015	2/1/2018, 83 FR 4591.	
214.604	Monitoring and Testing	12/7/2015	2/1/2018, 83 FR 4591.	
214.605	Recordkeeping and Reporting	12/7/2015	2/1/2018, 83 FR 4591.	
214.Appendix C:	Compliance Dates	4/14/1972	5/31/1972, 37 FR 10842	Approved as Rule 204(e)(1).
Part 215: Organic Material Emission Standards and Limitations				
Subpart A: General Provisions				
215.101	Clean-Up and Disposal Operations	7/28/1979	2/21/1980, 45 FR 11472.	

EPA-APPROVED ILLINOIS REGULATIONS AND STATUTES—Continued

Illinois citation	Title/subject	State effective date	EPA approval date	Comments
215.102	Testing Methods	5/14/1991	8/18/1992, 57 FR 37100.	
215.104	Definitions	1/28/2013	10/6/2014, 79 FR 60070.	
215.105	Incorporation by Reference	1/28/2013	10/6/2014, 79 FR 60070.	
215.108	Measurement of Vapor Pressures	5/14/1991	8/18/1992, 57 FR 37100.	
215.109	Monitoring for Negligibly-Reactive Compounds.	6/19/1998	1/15/1999, 64 FR 2581.	
Subpart B: Organic Emissions From Storage and Loading Operations				
215.121	Storage Containers	7/28/1979	2/21/1980, 45 FR 11472.	
215.122	Loading Operations	7/28/1979	2/21/1980, 45 FR 11472.	
215.123	Petroleum Liquid Storage Tanks	7/28/1979	2/21/1980, 45 FR 11472.	
215.124	External Floating Roofs	1/21/1983	6/29/1990, 55 FR 26814.	
215.125	Compliance Dates and Geographical Areas.	1/21/1983	6/29/1990, 55 FR 26814.	
215.126	Compliance Plan	1/21/1983	6/29/1990, 55 FR 26814.	
Subpart C: Organic Emissions From Miscellaneous Equipment				
215.141	Separation Operations	7/28/1979	2/21/1980, 45 FR 11472.	
215.142	Pumps and Compressors	7/28/1979	2/21/1980, 45 FR 11472.	
215.143	Vapor Blowdown	7/28/1979	2/21/1980, 45 FR 11472.	
215.144	Safety Relief Valves	7/28/1979	2/21/1980, 45 FR 11472.	
Subpart E: Solvent Cleaning				
215.181	Solvent Cleaning in General	7/28/1979	2/21/1980, 45 FR 11472.	
215.182	Cold Cleaning	7/28/1979	2/21/1980, 45 FR 11472.	
215.183	Open Top Vapor Degreasing	7/28/1979	2/21/1980, 45 FR 11472.	
215.184	Conveyorized Degreasing	7/28/1979	2/21/1980, 45 FR 11472.	
Subpart F: Coating Operations				
215.202	Compliance Schedules	7/28/1979	2/21/1980, 45 FR 11472.	
215.204	Emission Limitations for Manufacturing Plants.	6/19/1998	1/15/1999, 64 FR 2581.	
215.205	Alternative Emission Limitations	6/19/1998	1/15/1999, 64 FR 2581.	
215.206	Exemptions From Emission Limitations.	6/19/1998	1/15/1999, 64 FR 2581.	
215.207	Compliance by Aggregation of Emission Units.	6/19/1998	1/15/1999, 64 FR 2581.	
215.208	Testing Methods for Volatile Organic Material Content.	7/28/1979	2/21/1980, 45 FR 11472.	
215.209	Exemption From General Rule on Use of Organic Material.	7/28/1979	2/21/1980, 45 FR 11472.	
215.211	Compliance Dates and Geographical Areas.	6/19/1998	1/15/1999, 64 FR 2581.	
215.212	Compliance Plan	6/19/1998	1/15/1999, 64 FR 2581.	
215.213	Special Requirements for Compliance Plan.	7/28/1979	2/21/1980, 45 FR 11472.	
215.215	DMI Emissions Limitations	7/28/1979	2/21/1980, 45 FR 11472.	
Subpart H: Special Limitations for Sources in Major Urbanized Areas Which Are Nonattainment for Ozone				
215.240	Applicability	6/29/1987	6/29/1990, 55 FR 26814.	
215.241	External Floating Roofs	6/29/1987	6/29/1990, 55 FR 26814.	
215.249	Compliance Dates	6/29/1987	6/29/1990, 55 FR 26814.	
Subpart K: Use of Organic Material				
215.301	Use of Organic Material	7/28/1979	2/21/1980, 45 FR 11472.	
215.302	Alternative Standard	7/28/1979	2/21/1980, 45 FR 11472.	
215.303	Fuel Combustion Emission Sources	7/28/1979	2/21/1980, 45 FR 11472.	
215.304	Operations With Compliance Program.	7/28/1979	2/21/1980, 45 FR 11472.	
Subpart P: Printing and Publishing				
215.408	Heatset Web Offset Lithographic Printing.	9/30/1987	6/29/1990, 55 FR 26814.	

EPA-APPROVED ILLINOIS REGULATIONS AND STATUTES—Continued

Illinois citation	Title/subject	State effective date	EPA approval date	Comments
Subpart Q: Leaks From Synthetic Organic Chemical and Polymer Manufacturing Equipment				
215.420	Applicability	12/14/1987	6/29/1990, 55 FR 26814.	
215.421	General Requirements	12/14/1987	6/29/1990, 55 FR 26814.	
215.422	Inspection Program Plan for Leaks	8/28/1985	6/29/1990, 55 FR 26814.	
215.423	Inspection Program for Leaks	8/28/1985	6/29/1990, 55 FR 26814.	
215.424	Repairing Leaks	8/28/1985	6/29/1990, 55 FR 26814.	
215.425	Recordkeeping for Leaks	8/28/1985	6/29/1990, 55 FR 26814.	
215.426	Reporting for Leaks	8/28/1985	6/29/1990, 55 FR 26814.	
215.427	Alternative Program for Leaks	8/28/1985	6/29/1990, 55 FR 26814.	
215.428	Compliance Dates	12/14/1987	6/29/1990, 55 FR 26814.	
215.429	Compliance Plan	12/14/1987	6/29/1990, 55 FR 26814.	
215.430	General Requirements	12/14/1987	6/29/1990, 55 FR 26814.	
215.431	Inspection Program Plan for Leaks	12/14/1987	6/29/1990, 55 FR 26814.	
215.433	Repairing Leaks	12/14/1987	6/29/1990, 55 FR 26814.	
215.434	Recordkeeping for Leaks	12/14/1987	6/29/1990, 55 FR 26814.	
215.435	Report for Leaks	12/14/1987	6/29/1990, 55 FR 26814.	
215.437	Open-Ended Valves	12/14/1987	6/29/1990, 55 FR 26814.	
215.438	Compliance Plan	12/14/1987	6/29/1990, 55 FR 26814.	
Subpart R: Petroleum Refining and Related Industries; Asphalt Materials				
215.441	Petroleum Refinery Waste Gas Disposal.	7/28/1979	2/21/1980, 45 FR 11472.	
215.442	Vacuum Producing Systems	7/28/1979	2/21/1980, 45 FR 11472.	
215.443	Wastewater (Oil/Water) Separator	7/28/1979	2/21/1980, 45 FR 11472.	
215.444	Process Unit Turnarounds	7/28/1979	2/21/1980, 45 FR 11472.	
215.445	Leaks: General Requirements	1/21/1983	11/27/1987, 52 FR 45333.	
215.446	Monitoring Program Plan for Leaks	1/21/1983	11/27/1987, 52 FR 45333.	
215.447	Monitoring Program for Leaks	1/21/1983	11/27/1987, 52 FR 45333.	
215.448	Recordkeeping for Leaks	1/21/1983	11/27/1987, 52 FR 45333.	
215.449	Reporting for Leaks	1/21/1983	11/27/1987, 52 FR 45333.	
215.450	Alternative Program for Leaks	1/21/1983	11/27/1987, 52 FR 45333.	
215.451	Sealing Device Requirements	1/21/1983	11/27/1987, 52 FR 45333.	
215.453	Compliance Dates and Geographical Areas.	1/21/1983	6/29/1990, 55 FR 26814.	
Subpart S: Rubber and Miscellaneous Plastic Products				
215.461	Manufacture of Pneumatic Rubber Tires.	1/21/1983	11/27/1987, 52 FR 45333.	
215.462	Green Tire Spraying Operations	1/21/1983	11/27/1987, 52 FR 45333.	
215.463	Alternative Emission Reduction Systems.	1/21/1983	11/27/1987, 52 FR 45333.	
215.464	Emissions Testing	1/21/1983	11/27/1987, 52 FR 45333.	
215.465	Compliance Dates and Geographical Areas.	1/21/1983	6/29/1990, 55 FR 26814.	
215.466	Compliance Plan	1/21/1983	6/29/1990, 55 FR 26814.	
Subpart T: Pharmaceutical Manufacturing				
215.480	Applicability of Subpart T	5/14/1991	8/18/1992, 57 FR 37100.	
215.481	Control of Reactors, Distillation Units, Crystallizers, Centrifuges and Vacuum Dryers.	5/14/1991	8/18/1992, 57 FR 37100.	
215.482	Control of Air Dryers, Production Equipment Exhaust Systems and Filters.	5/14/1991	8/18/1992, 57 FR 37100.	
215.483	Material Storage and Transfer	5/14/1991	8/18/1992, 57 FR 37100.	
215.484	In-Process Tanks	5/14/1991	8/18/1992, 57 FR 37100.	
215.485	Leaks	5/14/1991	8/18/1992, 57 FR 37100.	
215.486	Other Emission Sources	5/14/1991	8/18/1992, 57 FR 37100.	
215.487	Testing	5/14/1991	8/18/1992, 57 FR 37100.	
215.488	Monitors for Air Pollution Control Equipment.	5/14/1991	8/18/1992, 57 FR 37100.	
215.489	Recordkeeping (Renumbered)	5/14/1991	8/18/1992, 57 FR 37100.	
215.490	Compliance Schedule (Renumbered)	5/14/1991	8/18/1992, 57 FR 37100.	
Subpart V: Air Oxidation Processes				
215.520	Applicability	12/14/1987	6/29/1990, 55 FR 26814.	

EPA-APPROVED ILLINOIS REGULATIONS AND STATUTES—Continued

Illinois citation	Title/subject	State effective date	EPA approval date	Comments
215.521	Definitions	12/14/1987	6/29/1990, 55 FR 26814.	
215.525	Emission Limitations for Air Oxidation Processes.	12/14/1987	6/29/1990, 55 FR 26814.	
215.526	Testing and Monitoring	12/14/1987	6/29/1990, 55 FR 26814.	
215.527	Compliance Date	12/14/1987	6/29/1990, 55 FR 26814.	
Subpart W: Agriculture				
215.541	Pesticide Exception	7/28/1979	2/21/1980, 45 FR 11472.	
Subpart X: Construction				
215.561	Architectural Coatings	7/28/1979	2/21/1980, 45 FR 11472.	
215.562	Paving Operations	7/28/1979	2/21/1980, 45 FR 11472.	
215.563	Cutback Asphalt	7/28/1979	2/21/1980, 45 FR 11472.	
Subpart Y: Gasoline Distribution				
215.581	Bulk Gasoline Plants	7/28/1979	2/21/1980, 45 FR 11472.	
215.582	Bulk Gasoline Terminals	6/29/1987	6/29/1990, 55 FR 26814.	
215.583	Gasoline Dispensing Facilities—Storage Tank Filling Operations.	6/29/1987	6/29/1990, 55 FR 26814.	
215.584	Gasoline Delivery Vessels	6/29/1987	6/29/1990, 55 FR 26814.	
Subpart Z: Dry Cleaners				
215.607	Standards for Petroleum Solvent Dry Cleaners.	4/3/1987	6/29/1990, 55 FR 26814.	
215.608	Operating Practices for Petroleum Solvent Dry Cleaners.	4/3/1987	6/29/1990, 55 FR 26814.	
215.609	Program for Inspection and Repair of Leaks.	4/3/1987	6/29/1990, 55 FR 26814.	
215.610	Testing and Monitoring	4/3/1987	6/29/1990, 55 FR 26814.	
215.611	Exemption for Petroleum Solvent Dry Cleaners.	4/3/1987	6/29/1990, 55 FR 26814.	
215.612	Compliance Dates and Geographical Areas.	4/3/1987	6/29/1990, 55 FR 26814.	
215.613	Compliance Plan	4/3/1987	6/29/1990, 55 FR 26814.	
Subpart BB: Polystyrene Plants				
215.875	Applicability of Subpart BB	9/30/1987	6/29/1990, 55 FR 26814.	
215.877	Emissions Limitation at Polystyrene Plants.	9/30/1987	6/29/1990, 55 FR 26814.	
215.879	Compliance Date	9/30/1987	6/29/1990, 55 FR 26814.	
215.881	Compliance Plan	9/30/1987	6/29/1990, 55 FR 26814.	
215.883	Special Requirements for Compliance Plan.	9/30/1987	6/29/1990, 55 FR 26814.	
215.886	Emissions Testing	9/30/1987	6/29/1990, 55 FR 26814.	
215.Appendix C:	Past Compliance Dates	7/28/1979	2/21/1980, 45 FR 11472	Approved as Rules 104(a), 104(g), 104(h), 205(j), and 205(m).
Part 216: Carbon Monoxide Emissions				
Subpart A: General Provisions				
216.101	Measurement Methods	7/28/1979	2/21/1980, 45 FR 11472	Approved as Rule 206(f).
Subpart B: Fuel Combustion Emission Sources				
216.121	Fuel Combustion Emission Sources	7/28/1979	2/21/1980, 45 FR 11472	Approved as Rule 206(a).
Subpart C: Incinerators				
216.141	Incinerators	7/28/1979	2/21/1980, 45 FR 11472	Approved as Rule 206(b).
216.142	Exceptions	7/28/1979	2/21/1980, 45 FR 11472	Approved as Rule 206(b)(1,2).

EPA-APPROVED ILLINOIS REGULATIONS AND STATUTES—Continued

Illinois citation	Title/subject	State effective date	EPA approval date	Comments
Subpart N: Petroleum Refining and Chemical Manufacture				
216.361	Petroleum and Petrochemical Processes.	7/28/1979	2/21/1980, 45 FR 11472	Approved as Rule 206(c).
216.362	Polybasic Organic Acid Partial Oxidation Manufacturing Processes.	7/28/1979	2/21/1980, 45 FR 11472	Approved as Rule 206(h).
Subpart O: Primary and Fabricated Metal Products				
216.381	Cupolas	7/28/1979	2/21/1980, 45 FR 11472	Approved as Rule 206(e).
216.382	Exception, General Motor's Ferrous Foundry in Vermilion County.	11/13/1992	8/4/1994, 59 FR 39686.	
216.Appendix C:	Compliance Dates	7/28/1979	2/21/1980, 45 FR 11472	Approved as Rule 206(g).
Part 217: Nitrogen Oxides Emissions				
Subpart A: General Provisions				
217.101	Measurement Methods	9/25/2007	6/26/2009, 74 FR 30466.	
217.102	Abbreviations and Units	9/25/2007	6/26/2009, 74 FR 30466.	
217.104	Incorporations by Reference	9/25/2007	6/26/2009, 74 FR 30466.	
Subpart B: New Fuel Combustion Emission Sources				
217.121	New Emission Sources	4/14/1972	5/31/1972, 37 FR 10862	Approved as Rule 207(a)(1)–(4), 207(a)(5)(A).
Subpart C: Existing Fuel Combustion Emission Sources				
217.141	Existing Emission Sources in Major Metropolitan Areas.	4/14/1972	5/31/1972, 37 FR 10862	Approved as Rule 207(b) and (c).
Subpart K: Process Emission Sources				
217.301	Industrial Processes	4/14/1972	5/31/1972, 37 FR 10862	Approved as Rule 207(e).
Subpart O: Chemical Manufacture				
217.381	Nitric Acid Manufacturing Processes	4/14/1972	5/31/1972, 37 FR 10862	Approved as Rule 207(d).
Subpart Q: Stationary Reciprocating Internal Combustion Engines and Turbines				
217.386	Applicability	9/25/2007	6/26/2009, 74 FR 30466.	
217.388	Control and Maintenance Requirements.	9/25/2007	6/26/2009, 74 FR 30466.	
217.390	Emissions Averaging Plans	9/25/2007	6/26/2009, 74 FR 30466.	
217.392	Compliance	9/25/2007	6/26/2009, 74 FR 30466.	
217.394	Testing and Monitoring	9/25/2007	6/26/2009, 74 FR 30466.	
217.396	Recordkeeping and Reporting	9/25/2007	6/26/2009, 74 FR 30466.	
Subpart T: Cement Kilns				
217.400	Applicability	3/15/2001	11/8/2001, 66 FR 56449.	
217.402	Control Requirements	3/15/2001	11/8/2001, 66 FR 56449.	
217.404	Testing	3/15/2001	11/8/2001, 66 FR 56449.	
217.406	Monitoring	3/15/2001	11/8/2001, 66 FR 56449.	
217.408	Reporting	3/15/2001	11/8/2001, 66 FR 56449.	
217.410	Recordkeeping	3/15/2001	11/8/2001, 66 FR 56449.	
Subpart U: NO_X Control and Trading Program for Specified NO_X Generating Units				
217.450	Purpose	4/17/2001	11/8/2001, 66 FR 56449.	
217.452	Severability	4/17/2001	11/8/2001, 66 FR 56449.	
217.454	Applicability	4/17/2001	11/8/2001, 66 FR 56449.	
217.456	Compliance Requirements	4/17/2001	11/8/2001, 66 FR 56449.	
217.458	Permitting Requirements	4/17/2001	11/8/2001, 66 FR 56449.	
217.460	Subpart U NO_X Trading Budget	4/17/2001	11/8/2001, 66 FR 56449.	
217.462	Methodology for Obtaining NO_X Allocations.	4/17/2001	11/8/2001, 66 FR 56449.	

EPA-APPROVED ILLINOIS REGULATIONS AND STATUTES—Continued

Illinois citation	Title/subject	State effective date	EPA approval date	Comments
217.464	Methodology for Determining NO_X Allowances From the New Source Set-Aside.	4/17/2001	11/8/2001, 66 FR 56449.	
217.466	NO_X Allocations Procedure for Subpart U Budget Units.	4/17/2001	11/8/2001, 66 FR 56449.	
217.468	New Source Set-Asides for "New" Budget Units.	4/17/2001	11/8/2001, 66 FR 56449.	
217.470	Early Reduction Credits (ERCS) for Budget Units.	4/17/2001	11/8/2001, 66 FR 56449.	
217.472	Low-Emitter Requirements	4/17/2001	11/8/2001, 66 FR 56449.	
217.474	Opt-In Units	4/17/2001	11/8/2001, 66 FR 56449.	
217.476	Opt-In Process	4/17/2001	11/8/2001, 66 FR 56449.	
217.478	Opt-In Budget Units: Withdrawal From NO_X Trading Program.	4/17/2001	11/8/2001, 66 FR 56449.	
217.480	Opt-In Units: Change in Regulatory Status.	4/17/2001	11/8/2001, 66 FR 56449.	
217.482	Allowance Allocations To Opt-In Budget Units.	4/17/2001	11/8/2001, 66 FR 56449.	
Subpart V: Electric Power Generation				
217.521	Lake of Egypt Power Plant	4/13/1978	6/18/2001, 66 FR 32769.	
217.700	Purpose	4/17/2001	6/18/2001, 66 FR 32769.	
217.702	Severability	4/17/2001	6/18/2001, 66 FR 32769.	
217.704	Applicability	4/17/2001	6/18/2001, 66 FR 32769.	
217.706	Emission Limitations	4/17/2001	6/18/2001, 66 FR 32769.	
217.708	NO_X Averaging	4/17/2001	6/18/2001, 66 FR 32769.	
217.710	Monitoring	4/17/2001	6/18/2001, 66 FR 32769.	
217.712	Reporting and Recordkeeping	4/17/2001	6/18/2001, 66 FR 32769.	
Subpart W: NO_X Trading Program for Electrical Generating Units				
217.750	Purpose	12/26/2000	11/8/2001, 66 FR 56454.	
217.751	Sunset Provisions	11/2/2009	3/1/2010, 75 FR 9103.	
217.752	Severability	12/26/2000	11/8/2001, 66 FR 56454.	
217.754	Applicability	12/26/2000	11/8/2001, 66 FR 56454.	
217.756	Compliance Requirements	12/26/2000	11/8/2001, 66 FR 56454	Except (d)(3).
217.758	Permitting Requirements	12/26/2000	11/8/2001, 66 FR 56454.	
217.760	NOx Trading Budget	12/26/2000	11/8/2001, 66 FR 56454.	
217.762	Methodology for Calculating NO_X Allocations for Budget Electrical Generating Units (EGUs).	12/26/2000	11/8/2001, 66 FR 56454.	
217.764	NO_X Allocations for Budget EGUs	12/26/2000	11/8/2001, 66 FR 56454.	
217.768	New Source Set-Asides for "New" Budget EGUs.	12/26/2000	11/8/2001, 66 FR 56454.	
217.770	Early Reduction Credits for Budget EGUs.	12/26/2000	11/8/2001, 66 FR 56454.	
217.774	Opt-In Units	12/26/2000	11/8/2001, 66 FR 56454.	
217.776	Opt-In Process	12/26/2000	11/8/2001, 66 FR 56454.	
217.778	Budget Opt-In Units: Withdrawal From NO_X Trading Program.	12/26/2000	11/8/2001, 66 FR 56454.	
217.780	Opt-In Units: Change in Regulatory Status.	12/26/2000	11/8/2001, 66 FR 56454.	
217.782	Allowance Allocations to Budget Opt-In Units.	12/26/2000	11/8/2001, 66 FR 56454.	
217.Appendix C:	Compliance Dates	4/14/1972	5/31/1972, 37 FR 10862.	
217.Appendix G:	Existing Reciprocating Internal Combustion Engines Affected by the NO_X Sip Call.	9/25/2007	6/26/2009, 74 FR 30466.	
Part 218: Organic Material Emission Standards and Limitations for the Chicago Area				
Subpart A: General Provisions				
218.100	Introduction	9/27/1993	9/9/1994, 59 FR 46562.	
218.101	Savings Clause	10/25/1994	4/3/1995, 60 FR 16801.	
218.102	Abbreviations and Conversion Factors.	9/27/1993	9/9/1994, 59 FR 46562.	
218.103	Applicability	9/27/1993	9/9/1994, 59 FR 46562.	
218.104	Definitions	9/27/1993	9/9/1994, 59 FR 46562.	
218.105	Test Methods and Procedures	7/27/2011	3/23/2012, 77 FR 16940.	

EPA-APPROVED ILLINOIS REGULATIONS AND STATUTES—Continued

Illinois citation	Title/subject	State effective date	EPA approval date	Comments
218.106	Compliance Dates	9/14/2010	3/23/2012, 77 FR 16940.	
218.107	Operation of Afterburners	9/27/1993	9/9/1994, 59 FR 46562.	
218.108	Exemptions, Variations, and Alternative Means of Control or Compliance Determinations.	1/24/1994	10/21/1996, 61 FR 54556.	
218.109	Vapor Pressure of Volatile Organic Liquids.	9/27/1993	9/9/1994, 59 FR 46562.	
218.110	Vapor Pressure of Organic Material or Solvent.	9/27/1993	9/9/1994, 59 FR 46562.	
218.111	Vapor Pressure of Volatile Organic Material.	9/27/1993	9/9/1994, 59 FR 46562.	
218.112	Incorporations by Reference	12/23/2013	3/13/2015, 80 FR 13248.	
218.114	Compliance With Permit Conditions	1/24/1994	10/21/1996, 61 FR 54556.	
Subpart B: Organic Emissions From Storage and Loading Operations				
218.119	Applicability for VOL	11/15/1994	8/8/1996, 61 FR 41338.	
218.120	Control Requirements for Storage Containers of VOL.	11/15/1994	8/8/1996, 61 FR 41338.	
218.121	Storage Containers	9/27/1993	9/9/1994, 59 FR 46562.	
218.122	Loading Operations	9/27/1993	9/9/1994, 59 FR 46562.	
218.123	Petroleum Liquid Storage Tanks	9/27/1993	9/9/1994, 59 FR 46562.	
218.124	External Floating Roofs	9/27/1993	9/9/1994, 59 FR 46562.	
218.125	Compliance Dates	11/15/1994	8/8/1996, 61 FR 41338.	
218.127	Testing VOL Operations	11/15/1994	8/8/1996, 61 FR 41338.	
218.128	Monitoring VOL Operations	1/28/2013	10/6/2014, 79 FR 60070.	
218.129	Recordkeeping and Reporting for VOL Operations.	11/15/1994	8/8/1996, 61 FR 41338.	
Subpart C: Organic Emissions From Miscellaneous Equipment				
218.141	Separation Operations	9/27/1993	9/9/1994, 59 FR 46562.	
218.142	Pumps and Compressors	8/16/1991	9/9/1994, 59 FR 46562.	
218.143	Vapor Blowdown	9/27/1993	9/9/1994, 59 FR 46562.	
218.144	Safety Relief Valves	9/27/1993	9/9/1994, 59 FR 46562.	
Subpart E: Solvent Cleaning				
218.181	Solvent Cleaning Degreasing Operations.	6/25/2010	3/23/2012, 77 FR 16940.	
218.182	Cold Cleaning	6/9/1997	11/26/1997, 62 FR 62951.	
218.183	Open Top Vapor Degreasing	9/27/1993	9/9/1994, 59 FR 46562.	
218.184	Conveyorized Degreasing	9/27/1993	9/9/1994, 59 FR 46562.	
218.186	Test Methods	9/27/1993	9/9/1994, 59 FR 46562.	
218.187	Other Industrial Solvent Cleaning Operations.	7/27/2011	3/23/2012, 77 FR 16940.	
Subpart F: Coating Operations				
218.204	Emission Limitations	7/27/2011	3/23/2012, 77 FR 16940.	
218.205	Daily-Weighted Average Limitations	9/14/2010	3/23/2012, 77 FR 16940.	
218.206	Solids Basis Calculation	9/27/1993	9/9/1994, 59 FR 46562.	
218.207	Alternative Emission Limitations	7/27/2011	3/23/2012, 77 FR 16940.	
218.208	Exemptions From Emission Limitations.	10/25/2011	4/19/2013, 78 FR 23495.	
218.209	Exemption From General Rule on Use of Organic Material.	9/27/1993	9/9/1994, 59 FR 46562.	
218.210	Compliance Schedule	6/25/2010	3/23/2012, 77 FR 16940.	
218.211	Recordkeeping and Reporting	7/27/2011	3/23/2012, 77 FR 16940.	
218.212	Cross-Line Averaging To Establish Compliance for Coating Lines.	9/14/2010	3/23/2012, 77 FR 16940.	
218.213	Recordkeeping and Reporting for Cross-Line Averaging Participating Coating Lines.	5/9/1995	2/13/1996, 61 FR 5511.	
218.214	Changing Compliance Methods	5/9/1995	2/13/1996, 61 FR 5511.	
218.215	Wood Furniture Coating Averaging Approach.	2/2/1998	5/19/1998, 63 FR 27489.	
218.216	Wood Furniture Coating Add-On Control Use.	2/2/1998	5/19/1998, 63 FR 27489.	

EPA-APPROVED ILLINOIS REGULATIONS AND STATUTES—Continued

Illinois citation	Title/subject	State effective date	EPA approval date	Comments
218.217	Wood Furniture Coating and Flat Wood Paneling Coating Work Practice Standards.	7/27/2011	3/23/2012, 77 FR 16940.	
218.218	Work Practice Standards for Paper Coatings, Metal Furniture Coatings, and Large Appliance Coatings.	3/23/2010	3/23/2012, 77 FR 16940.	
218.219	Work Practice Standards for Automobile and Light-Duty Truck Assembly Coatings and Miscellaneous Metal and Plastic Parts Coatings.	9/14/2010	3/23/2012, 77 FR 16940.	
Subpart G: Use of Organic Material				
218.301	Use of Organic Material	9/27/1993	9/9/1994, 59 FR 46562.	
218.302	Alternative Standard	9/27/1993	9/9/1994, 59 FR 46562.	
218.303	Fuel Combustion Emission Units	9/27/1993	9/9/1994, 59 FR 46562.	
218.304	Operations With Compliance Program.	9/27/1993	9/9/1994, 59 FR 46562.	
Subpart H: Printing and Publishing				
218.401	Flexographic and Rotogravure Printing.	7/27/2011	3/23/2012, 77 FR 16940.	
218.402	Applicability	7/27/2011	3/23/2012, 77 FR 16940.	
218.403	Compliance Schedule	6/25/2010	3/23/2012, 77 FR 16940.	
218.404	Recordkeeping and Reporting	7/27/2011	3/23/2012, 77 FR 16940.	
218.405	Lithographic Printing: Applicability	6/25/2010	3/23/2012, 77 FR 16940.	
218.407	Emission Limitations and Control Requirements for Lithographic Printing Lines.	6/25/2010	3/23/2012, 77 FR 16940.	
218.409	Testing for Lithographic Printing on and After March 15, 1996.	7/27/2011	3/23/2012, 77 FR 16940.	
218.410	Monitoring Requirements for Lithographic Printing.	6/25/2010	3/23/2012, 77 FR 16940.	
218.411	Recordkeeping and Reporting for Lithographic Printing.	7/27/2011	3/23/2012, 77 FR 16940.	
218.412	Letterpress Printing Lines: Applicability.	6/25/2010	3/23/2012, 77 FR 16940.	
218.413	Emission Limitations and Control Requirements for Letterpress Printing Lines.	6/25/2010	3/23/2012, 77 FR 16940.	
218.415	Testing for Letterpress Printing Lines	7/27/2011	3/23/2012, 77 FR 16940.	
218.416	Monitoring Requirements for Letterpress Printing Lines.	6/25/2010	3/23/2012, 77 FR 16940.	
218.417	Recordkeeping and Reporting for Letterpress Printing Lines.	7/27/2011	3/23/2012, 77 FR 16940.	
Subpart Q: Synthetic Organic Chemical and Polymer Manufacturing Plant				
218.421	General Requirements	9/27/1993	9/9/1994, 59 FR 46562.	
218.422	Inspection Program Plan for Leaks	9/27/1993	9/9/1994, 59 FR 46562.	
218.423	Inspection Program for Leaks	9/27/1993	9/9/1994, 59 FR 46562.	
218.424	Repairing Leaks	9/27/1993	9/9/1994, 59 FR 46562.	
218.425	Recordkeeping for Leaks	9/27/1993	9/9/1994, 59 FR 46562.	
218.426	Report for Leaks	9/27/1993	9/9/1994, 59 FR 46562.	
218.427	Alternative Program for Leaks	9/27/1993	9/9/1994, 59 FR 46562.	
218.428	Open-Ended Valves	9/27/1993	9/9/1994, 59 FR 46562.	
218.429	Standards for Control Devices	9/27/1993	9/9/1994, 59 FR 46562.	
218.431	Applicability	5/9/1995	3/23/1998, 63 FR 13784.	
218.432	Control Requirements	5/9/1995	3/23/1998, 63 FR 13784.	
218.433	Performance and Testing Requirements.	5/9/1995	3/23/1998, 63 FR 13784.	
218.434	Monitoring Requirements	5/9/1995	3/23/1998, 63 FR 13784.	
218.435	Recordkeeping and Reporting Requirements.	5/9/1995	3/23/1998, 63 FR 13784.	
218.436	Compliance Date	5/9/1995	3/23/1998, 63 FR 13784.	

EPA-APPROVED ILLINOIS REGULATIONS AND STATUTES—Continued

Illinois citation	Title/subject	State effective date	EPA approval date	Comments
Subpart R: Petroleum Refining and Related Industries; Asphalt Materials				
218.441	Petroleum Refinery Waste Gas Disposal.	9/27/1993	9/9/1994, 59 FR 46562.	
218.442	Vacuum Producing Systems	8/16/1991	9/9/1994, 59 FR 46562.	
218.443	Wastewater (Oil/Water) Separator	9/27/1993	9/9/1994, 59 FR 46562.	
218.444	Process Unit Turnarounds	8/16/1991	9/9/1994, 59 FR 46562.	
218.445	Leaks: General Requirements	9/27/1993	9/9/1994, 59 FR 46562.	
218.446	Monitoring Program Plan for Leaks	9/27/1993	9/9/1994, 59 FR 46562.	
218.447	Monitoring Program for Leaks	9/27/1993	9/9/1994, 59 FR 46562.	
218.448	Recordkeeping for Leaks	8/16/1991	9/9/1994, 59 FR 46562.	
218.449	Reporting for Leaks	9/27/1993	9/9/1994, 59 FR 46562.	
218.450	Alternative Program for Leaks	9/27/1993	9/9/1994, 59 FR 46562.	
218.451	Sealing Device Requirements	8/16/1991	9/9/1994, 59 FR 46562.	
218.452	Compliance Schedule for Leaks	9/27/1993	9/9/1994, 59 FR 46562.	
Subpart S: Rubber and Miscellaneous Plastic Products				
218.461	Manufacture of Pneumatic Rubber Tires.	9/27/1993	9/9/1994, 59 FR 46562.	
218.462	Green Tire Spraying Operations	9/27/1993	9/9/1994, 59 FR 46562.	
218.463	Alternative Emission Reduction Systems.	9/27/1993	9/9/1994, 59 FR 46562.	
218.464	Emission Testing	9/27/1993	9/9/1994, 59 FR 46562.	
Subpart T: Pharmaceutical Manufacturing				
218.480	Applicability	8/26/2008	11/3/2010, 75 FR 67623.	
218.481	Control of Reactors, Distillation Units, Crystallizers, Centrifuges and Vacuum Dryers.	9/27/1993	9/9/1994, 59 FR 46562.	
218.482	Control of Air Dryers, Production Equipment Exhaust Systems and Filters.	9/27/1993	9/9/1994, 59 FR 46562.	
218.483	Material Storage and Transfer	9/27/1993	9/9/1994, 59 FR 46562.	
218.484	In-Process Tanks	8/16/1991	9/9/1994, 59 FR 46562.	
218.485	Leaks	9/27/1993	9/9/1994, 59 FR 46562.	
218.486	Other Emission Units	9/27/1993	9/9/1994, 59 FR 46562.	
218.487	Testing	9/27/1993	9/9/1994, 59 FR 46562.	
218.488	Monitoring for Air Pollution Control Equipment.	8/16/1991	9/9/1994, 59 FR 46562.	
218.489	Recordkeeping for Air Pollution Control Equipment.	9/27/1993	9/9/1994, 59 FR 46562.	
Subpart V: Batch Operations and Air Oxidation Processes				
218.500	Applicability for Batch Operations	5/22/1995	4/2/1996, 61 FR 14484.	
218.501	Control Requirements for Batch Operations.	5/22/1995	4/2/1996, 61 FR 14484.	
218.502	Determination of Uncontrolled Total Annual Mass Emissions and Average Flow Rate Values for Batch Operations.	5/22/1995	4/2/1996, 61 FR 14484.	
218.503	Performance and Testing Requirements for Batch Operations.	5/22/1995	4/2/1996, 61 FR 14484.	
218.504	Monitoring Requirements for Batch Operations.	5/22/1995	4/2/1996, 61 FR 14484.	
218.505	Reporting and Recordkeeping for Batch Operations.	5/22/1995	4/2/1996, 61 FR 14484.	
218.506	Compliance Date	5/22/1995	4/2/1996, 61 FR 14484.	
218.520	Emission Limitations for Air Oxidation Processes.	11/15/1994	9/27/1995, 60 FR 49770.	
218.522	Savings Clause	11/15/1994	9/27/1995, 60 FR 49770.	
218.523	Compliance	11/15/1994	9/27/1995, 60 FR 49770.	
218.524	Determination of Applicability	11/15/1994	9/27/1995, 60 FR 49770.	
218.525	Emission Limitations for Air Oxidation Processes.	11/15/1994	9/27/1995, 60 FR 49770.	
218.526	Testing and Monitoring	8/16/1991	9/9/1994, 59 FR 46562.	

EPA-APPROVED ILLINOIS REGULATIONS AND STATUTES—Continued

Illinois citation	Title/subject	State effective date	EPA approval date	Comments
Subpart W: Agriculture				
218.541	Pesticide Exception	9/27/1993	9/9/1994, 59 FR 46562.	
Subpart X: Construction				
218.561	Architectural Coatings	8/16/1991	9/9/1994, 59 FR 46562.	
218.562	Paving Operations	9/27/1993	9/9/1994, 59 FR 46562.	
218.563	Cutback Asphalt	8/16/1991	9/9/1994, 59 FR 46562.	
Subpart Y: Gasoline Distribution				
218.581	Bulk Gasoline Plants	9/27/1993	9/9/1994, 59 FR 46562.	
218.582	Bulk Gasoline Terminals	9/27/1993	9/9/1994, 59 FR 46562.	
218.583	Gasoline Dispensing Operations—Storage Tank Filling Operations.	12/23/2013	3/13/2015, 80 FR 13248.	
218.584	Gasoline Delivery Vessels	9/27/1993	9/9/1994, 59 FR 46562.	
218.586	Gasoline Dispensing Operations—Motor Vehicle Fueling Operations.	12/23/2013	3/13/2015, 80 FR 13248.	
Subpart Z: Dry Cleaners				
218.607	Standards for Petroleum Solvent Dry Cleaners.	8/16/1991	9/9/1994, 59 FR 46562.	
218.608	Operating Practices for Petroleum Solvent Dry Cleaners.	9/27/1993	9/9/1994, 59 FR 46562.	
218.609	Program for Inspection and Repair of Leaks.	9/27/1993	9/9/1994, 59 FR 46562.	
218.610	Testing and Monitoring	9/27/1993	9/9/1994, 59 FR 46562.	
218.611	Applicability for Petroleum Solvent Dry Cleaners.	1/24/1994	10/21/1996, 61 FR 54556.	
Subpart AA: Paint and Ink Manufacturing				
218.620	Applicability	1/24/1994	10/21/1996, 61 FR 54556.	
218.621	Exemption for Waterbase Material and Heatset Offset Ink.	9/27/1993	9/9/1994, 59 FR 46562.	
218.624	Open Top Mills, Tanks, Vats or Vessels.	9/27/1993	9/9/1994, 59 FR 46562.	
218.625	Grinding Mills	8/16/1991	9/9/1994, 59 FR 46562.	
218.626	Storage Tanks	8/16/1991	9/9/1994, 59 FR 46562.	
218.628	Leaks	9/27/1993	9/9/1994, 59 FR 46562.	
218.630	Clean Up	8/16/1991	9/9/1994, 59 FR 46562.	
218.636	Compliance Schedule	9/27/1993	9/9/1994, 59 FR 46562.	
218.637	Recordkeeping and Reporting	9/27/1993	9/9/1994, 59 FR 46562.	
Subpart BB: Polystyrene Plants				
218.640	Applicability	9/27/1993	9/9/1994, 59 FR 46562.	
218.642	Emissions Limitation at Polystyrene Plants.	9/27/1993	9/9/1994, 59 FR 46562.	
218.644	Emissions Testing	9/27/1993	9/9/1994, 59 FR 46562.	
Subpart CC: Polyester Resin Product Manufacturing Process				
218.660	Applicability	1/24/1994	10/21/1996, 61 FR 54556.	
218.666	Control Requirements	1/24/1994	10/21/1996, 61 FR 54556.	
218.667	Compliance Schedule	1/24/1994	10/21/1996, 61 FR 54556.	
218.668	Testing	1/24/1994	10/21/1996, 61 FR 54556.	
218.670	Recordkeeping and Reporting for Exempt Emission Units.	1/24/1994	10/21/1996, 61 FR 54556.	
218.672	Recordkeeping and Reporting for Subject Emission Units.	1/24/1994	10/21/1996, 61 FR 54556.	
Subpart DD: Aerosol Can Fillings				
218.680	Applicability	1/24/1994	10/21/1996, 61 FR 54556.	
218.686	Control Requirements	5/9/1995	3/12/1997, 62 FR 11327.	
218.688	Testing	1/24/1994	10/21/1996, 61 FR 54556.	
218.690	Recordkeeping and Reporting for Exempt Emission Units.	1/24/1994	10/21/1996, 61 FR 54556.	

EPA-APPROVED ILLINOIS REGULATIONS AND STATUTES—Continued

Illinois citation	Title/subject	State effective date	EPA approval date	Comments
218.692	Recordkeeping and Reporting for Subject Emission Units.	1/24/1994	10/21/1996, 61 FR 54556.	
Subpart GG: Marine Terminals				
218.760	Applicability	10/25/1994	4/3/1995, 60 FR 16801.	
218.762	Control Requirements	10/25/1994	4/3/1995, 60 FR 16801.	
218.764	Compliance Certification	10/25/1994	4/3/1995, 60 FR 16801.	
218.766	Leaks	10/25/1994	4/3/1995, 60 FR 16801.	
218.768	Testing and Monitoring	10/25/1994	4/3/1995, 60 FR 16801.	
218.770	Recordkeeping and Reporting	10/25/1994	4/3/1995, 60 FR 16801.	
Subpart HH: Motor Vehicle Refinishing				
218.780	Emission Limitations	5/9/1995	7/25/1996, 61 FR 38577.	
218.782	Alternative Control Requirements	5/9/1995	7/25/1996, 61 FR 38577.	
218.784	Equipment Specifications	1/28/2013	10/6/2014, 79 FR 60070.	
218.786	Surface Preparation Materials	5/9/1995	7/25/1996, 61 FR 38577.	
218.787	Work Practices	5/9/1995	7/25/1996, 61 FR 38577.	
218.788	Testing	5/9/1995	7/25/1996, 61 FR 38577.	
218.789	Monitoring and Recordkeeping for Control Devices.	5/9/1995	7/25/1996, 61 FR 38577.	
218.790	General Recordkeeping and Reporting.	5/9/1995	7/25/1996, 61 FR 38577.	
218.791	Compliance Date	5/9/1995	7/25/1996, 61 FR 38577.	
Subpart II: Fiberglass Boat Manufacturing Materials				
218.890	Applicability	9/14/2010	3/23/2012, 77 FR 16940.	
218.891	Emission Limitations and Control Requirements.	7/27/11	3/23/12, 77 FR 16940.	
218.892	Testing Requirements	7/27/2011	3/23/2012, 77 FR 16940.	
218.894	Recordkeeping and Reporting Requirements.	7/27/2011	3/23/2012, 77 FR 16940.	
Subpart JJ: Miscellaneous Industrial Adhesives				
218.900	Applicability	9/14/2010	3/23/2012, 77 FR 16940.	
218.901	Emission Limitations and Control Requirements.	7/27/2011	3/23/2012, 77 FR 16940.	
218.902	Testing Requirements	7/27/2011	3/23/2012, 77 FR 16940.	
218.903	Monitoring Requirements	7/27/2011	3/23/2012, 77 FR 16940.	
218.904	Recordkeeping and Reporting Requirements.	7/27/2011	3/23/2012, 77 FR 16940.	
Subpart PP: Miscellaneous Fabricated Product Manufacturing Processes				
218.920	Applicability	1/24/1994	10/21/1996, 61 FR 54556.	
218.926	Control Requirements	1/24/1994	10/21/1996, 61 FR 54556.	
218.927	Compliance Schedule	9/27/1993	10/21/1996, 61 FR 54556.	
218.928	Testing	9/27/1993	10/21/1996, 61 FR 54556.	
218.929	Cementable and Dress or Performance Shoe Leather.	4/8/2003	5/24/2004, 69 FR 29446.	
Subpart QQ: Miscellaneous Formulation Manufacturing Processes				
218.940	Applicability	7/16/1998	6/18/1999, 64 FR 32810.	
218.946	Control Requirements	1/24/1994	10/21/1996, 61 FR 54556.	
218.947	Compliance Schedule	9/27/1993	9/9/1994, 59 FR 46562.	
218.948	Testing	9/27/1993	9/9/1994, 59 FR 46562.	
Subpart RR: Miscellaneous Organic Chemical Manufacturing Processes				
218.960	Applicability	1/24/1994	10/21/1996, 61 FR 54556.	
218.966	Control Requirements	5/9/1995	3/12/1997, 62 FR 11327.	
218.967	Compliance Schedule	9/27/1993	10/21/1996, 61 FR 54556.	
218.968	Testing	9/27/1993	10/21/1996, 61 FR 54556.	
Subpart TT: Other Emission Units				
218.980	Applicability	5/9/1995	3/12/1997, 62 FR 11327.	

EPA-APPROVED ILLINOIS REGULATIONS AND STATUTES—Continued

Illinois citation	Title/subject	State effective date	EPA approval date	Comments
218.986	Control Requirements	1/24/1994	10/21/1996, 61 FR 54556.	
218.987	Compliance Schedule	9/27/1993	10/21/1996, 61 FR 54556.	
218.988	Testing	9/27/1993	10/21/1996, 61 FR 54556.	
Subpart UU: Recordkeeping and Reporting				
218.990	Exempt Emission Units	9/27/1993	10/21/1996, 61 FR 54556.	
218.991	Subject Emission Units	1/24/1994	10/21/1996, 61 FR 54556.	
218.Appendix A:	List of Chemicals Defining Synthetic Organic Chemical and Polymer Manufacturing.	9/27/1993	9/9/1994, 59 FR 46562.	
218.Appendix B:	VOM Measurement Techniques for Capture Efficiency.	9/27/1993	9/9/1994, 59 FR 46562.	
218.Appendix C:	Reference Test Methods for Air Oxidation Processes.	9/27/1993	9/9/1994, 59 FR 46562.	
218.Appendix D:	Coefficients for the Total Resource Effectiveness Index (TRE) Equation.	9/27/1993	9/9/1994, 59 FR 46562.	
218.Appendix E:	List of Affected Marine Terminals	10/25/1994	4/3/1995, 60 FR 16801.	
218.Appendix G:	TRE Index Measurements for SOCMI Reactors and Distillation Units.	5/9/1995	3/23/1998, 63 FR 13784.	
218.Appendix H:	Baseline VOM Content Limitations for Subpart F, Section 218.212 Cross-Line Averaging.	5/9/1995	2/13/1996, 61 FR 5511.	
Part 219: Organic Material Emission Standards and Limitations for the Metro East Area				
Subpart A: General Provisions				
219.100	Introduction	9/27/1993	9/9/1994, 59 FR 46562.	
219.101	Savings Clause	10/25/1994	4/3/1995, 60 FR 16801.	
219.102	Abbreviations and Conversion Factors.	9/27/1993	9/9/1994, 59 FR 46562.	
219.103	Applicability	8/16/1991	9/9/1994, 59 FR 46562.	
219.104	Definitions	9/27/1993	9/9/1994, 59 FR 46562.	
219.105	Test Methods and Procedures	12/23/2013	3/13/2015, 80 FR 13248.	
219.106	Compliance Dates	9/14/2010	3/23/2012, 77 FR 16940.	
219.107	Operation of Afterburners	9/27/1993	9/9/1994, 59 FR 46562.	
219.108	Exemptions, Variations, and Alternative Means of Control or Compliance Determinations.	8/16/1991	9/9/1994, 59 FR 46562.	
219.109	Vapor Pressure of Volatile Organic Liquids.	9/27/1993	9/9/1994, 59 FR 46562.	
219.110	Vapor Pressure of Organic Material or Solvent.	9/27/1993	9/9/1994, 59 FR 46562.	
219.111	Vapor Pressure of Volatile Organic Material.	9/27/1993	9/9/1994, 59 FR 46562.	
219.112	Incorporations by Reference	12/23/2013	3/13/2015, 80 FR 13248.	
Subpart B: Organic Emissions From Storage and Loading Operations				
219.119	Applicability for VOL	11/15/1994	8/8/1996, 61 FR 41338.	
219.120	Control Requirements for Storage Containers of VOL.	11/15/1994	8/8/1996, 61 FR 41338.	
219.121	Storage Containers of VPL	9/27/1993	9/9/1994, 59 FR 46562.	
219.122	Loading Operations	9/27/1993	9/9/1994, 59 FR 46562.	
219.123	Petroleum Liquid Storage Tanks	9/27/1993	9/9/1994, 59 FR 46562.	
219.124	External Floating Roofs	9/27/1993	9/9/1994, 59 FR 46562.	
219.125	Compliance Dates	11/15/1994	8/8/1996, 61 FR 41338.	
219.127	Testing VOL Operations	11/15/1994	8/8/1996, 61 FR 41338.	
219.128	Monitoring VOL Operations	1/28/2013	10/6/2014, 79 FR 60070.	
219.129	Recordkeeping and Reporting for VOL Operations.	11/15/1994	8/8/1996, 61 FR 41338.	
Subpart C: Organic Emissions From Miscellaneous Equipment				
219.141	Separation Operations	9/27/1993	9/9/1994, 59 FR 46562.	
219.142	Pumps and Compressors	8/16/1991	9/9/1994, 59 FR 46562.	
219.143	Vapor Blowdown	9/27/1993	9/9/1994, 59 FR 46562.	

EPA-APPROVED ILLINOIS REGULATIONS AND STATUTES—Continued

Illinois citation	Title/subject	State effective date	EPA approval date	Comments
219.144	Safety Relief Valves	9/27/1993	9/9/1994, 59 FR 46562.	
Subpart E: Solvent Cleaning				
219.181	Solvent Cleaning Degreasing Operations.	6/25/2010	3/23/2012, 77 FR 16940.	
219.182	Cold Cleaning	6/9/1997	11/26/1997, 62 FR 62951.	
219.183	Open Top Vapor Degreasing	9/27/1993	9/9/1994, 59 FR 46562.	
219.184	Conveyorized Degreasing	9/27/1993	9/9/1994, 59 FR 46562.	
219.186	Test Methods	9/27/1993	9/9/1994, 59 FR 46562.	
219.187	Other Industrial Solvent Cleaning Operations.	7/27/2011	3/23/2012, 77 FR 16940.	
Subpart F: Coating Operations				
219.204	Emission Limitations	7/27/2011	3/23/2012, 77 FR 16940.	
219.205	Daily-Weighted Average Limitations	9/14/2010	3/23/2012, 77 FR 16940.	
219.206	Solids Basis Calculation	9/27/1993	9/9/1994, 59 FR 46562.	
219.207	Alternative Emission Limitations	7/27/2011	3/23/2012, 77 FR 16940.	
219.208	Exemptions From Emission Limitations.	10/25/2011	4/19/2013, 78 FR 23495.	
219.209	Exemption From General Rule on Use of Organic Material.	9/27/1993	9/9/1994, 59 FR 46562.	
219.210	Compliance Schedule	9/14/2010	3/23/2012, 77 FR 16940.	
219.211	Recordkeeping and Reporting	7/27/2011	3/23/2012, 77 FR 16940.	
219.212	Cross-Line Averaging To Establish Compliance for Coating Lines.	9/14/2010	3/23/2012, 77 FR 16940.	
219.213	Recordkeeping and Reporting for Cross-Line Averaging Participating Coating Lines.	5/9/1995	2/13/1996, 61 FR 5511.	
219.214	Changing Compliance Methods	5/9/1995	2/13/1996, 61 FR 5511.	
219.215	Wood Furniture Coating Averaging Approach.	2/2/1998	5/19/1998, 63 FR 27489.	
219.216	Wood Furniture Coating Add-On Control Use.	2/2/1998	5/19/1998, 63 FR 27489.	
219.217	Wood Furniture Coating and Flat Wood Paneling Coating Work Practice Standards.	7/27/2011	3/23/2012, 77 FR 16940.	
219.218	Work Practice Standards for Paper Coatings, Metal Furniture Coatings, and Large Appliance Coatings.	3/23/2010	3/23/2012, 77 FR 16940.	
219.219	Work Practice Standards for Automobile and Light-Duty Truck Assembly Coatings and Miscellaneous Metal and Plastic Parts Coatings.	9/14/2010	3/23/2012, 77 FR 16940.	
Subpart G: Use of Organic Material				
219.301	Use of Organic Material	9/27/1993	9/9/1994, 59 FR 46562.	
219.302	Alternative Standard	9/27/1993	9/9/1994, 59 FR 46562.	
219.303	Fuel Combustion Emission Units	9/27/1993	9/9/1994, 59 FR 46562.	
219.304	Operations With Compliance Program.	9/27/1993	9/9/1994, 59 FR 46562.	
Subpart H: Printing and Publishing				
219.401	Flexographic and Rotogravure Printing.	7/27/2011	3/23/2012, 77 FR 16940.	
219.402	Applicability	6/25/2010	3/23/2012, 77 FR 16940.	
219.403	Compliance Schedule	6/25/2010	3/23/2012, 77 FR 16940.	
219.404	Recordkeeping and Reporting	7/27/2011	3/23/2012, 77 FR 16940.	
219.405	Lithographic Printing: Applicability	6/25/2010	3/23/2012, 77 FR 16940.	
219.407	Emission Limitations and Control Requirements for Lithographic Printing Lines.	6/25/2010	3/23/2012, 77 FR 16940.	
219.409	Testing for Lithographic Printing	7/27/2011	3/23/2012, 77 FR 16940.	
219.410	Monitoring Requirements for Lithographic Printing.	6/25/2010	3/23/2012, 77 FR 16940.	

EPA-APPROVED ILLINOIS REGULATIONS AND STATUTES—Continued

Illinois citation	Title/subject	State effective date	EPA approval date	Comments
219.411	Recordkeeping and Reporting for Lithographic Printing.	7/27/2011	3/23/2012, 77 FR 16940.	
219.412	Letterpress Printing Lines: Applicability.	6/25/2010	3/23/2012, 77 FR 16940.	
219.413	Emission Limitations and Control Requirements for Letterpress Printing Lines.	6/25/2010	3/23/2012, 77 FR 16940.	
219.415	Testing for Letterpress Printing Lines	7/27/2011	3/23/2012, 77 FR 16940.	
219.416	Monitoring Requirements for Letterpress Printing Lines.	6/25/2010	3/23/2012, 77 FR 16940.	
219.417	Recordkeeping and Reporting for Letterpress Printing Lines.	7/27/2011	3/23/2012, 77 FR 16940.	
Subpart Q: Synthetic Organic Chemical and Polymer Manufacturing Plant				
219.421	General Requirements	9/27/1993	9/9/1994, 59 FR 46562.	
219.422	Inspection Program Plan for Leaks	9/27/1993	9/9/1994, 59 FR 46562.	
219.423	Inspection Program for Leaks	9/27/1993	9/9/1994, 59 FR 46562.	
219.424	Repairing Leaks	9/27/1993	9/9/1994, 59 FR 46562.	
219.425	Recordkeeping for Leaks	9/27/1993	9/9/1994, 59 FR 46562.	
219.426	Report for Leaks	9/27/1993	9/9/1994, 59 FR 46562.	
219.427	Alternative Program for Leaks	9/27/1993	9/9/1994, 59 FR 46562.	
219.428	Open-Ended Valves	9/27/1993	9/9/1994, 59 FR 46562.	
219.429	Standards for Control Devices	9/27/1993	9/9/1994, 59 FR 46562.	
219.431	Applicability	5/9/1995	3/23/1998, 63 FR 13784.	
219.432	Control Requirements	5/9/1995	3/23/1998, 63 FR 13784.	
219.433	Performance and Testing Requirements.	5/9/1995	3/23/1998, 63 FR 13784.	
219.434	Monitoring Requirements	5/9/1995	3/23/1998, 63 FR 13784.	
219.435	Recordkeeping and Reporting Requirements.	5/9/1995	3/23/1998, 63 FR 13784.	
219.436	Compliance Date	5/9/1995	3/23/1998, 63 FR 13784.	
Subpart R: Petroleum Refining and Related Industries; Asphalt Materials				
219.441	Petroleum Refinery Waste Gas Disposal.	9/27/1993	9/9/1994, 59 FR 46562.	
219.442	Vacuum Producing Systems	8/16/1991	9/9/1994, 59 FR 46562.	
219.443	Wastewater (Oil/Water) Separator	9/27/1993	9/9/1994, 59 FR 46562.	
219.444	Process Unit Turnarounds	8/16/1991	9/9/1994, 59 FR 46562.	
219.445	Leaks: General Requirements	9/27/1993	9/9/1994, 59 FR 46562.	
219.446	Monitoring Program Plan for Leaks	9/27/1993	9/9/1994, 59 FR 46562.	
219.447	Monitoring Program for Leaks	9/27/1993	9/9/1994, 59 FR 46562.	
219.448	Recordkeeping for Leaks	8/16/1991	9/9/1994, 59 FR 46562.	
219.449	Reporting for Leaks	9/27/1993	9/9/1994, 59 FR 46562.	
219.450	Alternative Program for Leaks	9/27/1993	9/9/1994, 59 FR 46562.	
219.451	Sealing Device Requirements	8/16/1991	9/9/1994, 59 FR 46562.	
219.452	Compliance Schedule for Leaks	9/27/1993	9/9/1994, 59 FR 46562.	
Subpart S: Rubber and Miscellaneous Plastic Products				
219.461	Manufacture of Pneumatic Rubber Tires.	9/27/1993	9/9/1994, 59 FR 46562.	
219.462	Green Tire Spraying Operations	9/27/1993	9/9/1994, 59 FR 46562.	
219.463	Alternative Emission Reduction Systems.	9/27/1993	9/9/1994, 59 FR 46562.	
219.464	Emission Testing	9/27/1993	9/9/1994, 59 FR 46562.	
Subpart T: Pharmaceutical Manufacturing				
219.480	Applicability	5/9/1995	3/12/1997, 62 FR 11327.	
219.481	Control of Reactors, Distillation Units, Crystallizers, Centrifuges and Vacuum Dryers.	9/27/1993	9/9/1994, 59 FR 46562.	
219.482	Control of Air Dryers, Production Equipment Exhaust Systems and Filters.	9/27/1993	9/9/1994, 59 FR 46562.	
219.483	Material Storage and Transfer	9/27/1993	9/9/1994, 59 FR 46562.	
219.484	In-Process Tanks	8/16/1991	9/9/1994, 59 FR 46562.	
219.485	Leaks	9/27/1993	9/9/1994, 59 FR 46562.	
219.486	Other Emission Units	9/27/1993	9/9/1994, 59 FR 46562.	

EPA-APPROVED ILLINOIS REGULATIONS AND STATUTES—Continued

Illinois citation	Title/subject	State effective date	EPA approval date	Comments
219.487	Testing	9/27/1993	9/9/1994, 59 FR 46562.	
219.488	Monitoring for Air Pollution Control Equipment.	8/16/1991	9/9/1994, 59 FR 46562.	
219.489	Recordkeeping for Air Pollution Control Equipment.	9/27/1993	9/9/1994, 59 FR 46562.	
Subpart V: Batch Operations and Air Oxidation Processes				
219.500	Applicability for Batch Operations	5/22/1995	4/2/1996, 61 FR 14484.	
219.501	Control Requirements for Batch Operations.	5/22/1995	4/2/1996, 61 FR 14484.	
219.502	Determination of Uncontrolled Total Annual Mass Emissions and Actual Weighted Average Flow Rate Values for Batch Operations.	5/22/1995	4/2/1996, 61 FR 14484.	
219.503	Performance and Testing Requirements for Batch Operations.	5/22/1995	4/2/1996, 61 FR 14484.	
219.504	Monitoring Requirements for Batch Operations.	5/22/1995	4/2/1996, 61 FR 14484.	
219.505	Reporting and Recordkeeping for Batch Operations.	5/22/1995	4/2/1996, 61 FR 14484.	
219.506	Compliance Date	5/22/1995	4/2/1996, 61 FR 14484.	
219.520	Emission Limitations for Air Oxidation Processes.	11/15/1994	9/27/1995, 60 FR 49770.	
219.522	Savings Clause	11/15/1994	9/27/1995, 60 FR 49770.	
219.523	Compliance	11/15/1994	9/27/1995, 60 FR 49770.	
219.524	Determination of Applicability	11/15/1994	9/27/1995, 60 FR 49770.	
219.526	Testing and Monitoring	8/16/1991	9/9/1994, 59 FR 46562.	
Subpart W: Agriculture				
219.541	Pesticide Exception	9/27/1993	9/9/1994, 59 FR 46562.	
Subpart X: Construction				
219.561	Architectural Coatings	8/16/1991	9/9/1994, 59 FR 46562.	
219.562	Paving Operations	9/27/1993	9/9/1994, 59 FR 46562.	
219.563	Cutback Asphalt	8/16/1991	9/9/1994, 59 FR 46562.	
Subpart Y: Gasoline Distribution				
219.581	Bulk Gasoline Plants	9/27/1993	9/9/1994, 59 FR 46562.	
219.582	Bulk Gasoline Terminals	9/27/1993	9/9/1994, 59 FR 46562.	
219.583	Gasoline Dispensing Operations—Storage Tank Filling Operations.	12/23/2013	3/13/2015, 80 FR 13248.	
219.584	Gasoline Delivery Vessels	9/27/1993	9/9/1994, 59 FR 46562.	
Subpart Z: Dry Cleaners				
219.607	Standards for Petroleum Solvent Dry Cleaners.	8/16/1991	9/9/1994, 59 FR 46562.	
219.608	Operating Practices for Petroleum Solvent Dry Cleaners.	9/27/1993	9/9/1994, 59 FR 46562.	
219.609	Program for Inspection and Repair of Leaks.	9/27/1993	9/9/1994, 59 FR 46562.	
219.610	Testing and Monitoring	9/27/1993	9/9/1994, 59 FR 46562.	
219.611	Exemption for Petroleum Solvent Dry Cleaners.	9/27/1993	9/9/1994, 59 FR 46562.	
Subpart AA: Paint and Ink Manufacturing				
219.620	Applicability	9/27/1993	9/9/1994, 59 FR 46562.	
219.621	Exemption for Waterbase Material and Heatset-Offset Ink.	9/27/1993	9/9/1994, 59 FR 46562.	
219.623	Permit Conditions	9/27/1993	9/9/1994, 59 FR 46562.	
219.624	Open-Top Mills, Tanks, Vats or Vessels.	9/27/1993	9/9/1994, 59 FR 46562.	
219.625	Grinding Mills	8/16/1991	9/9/1994, 59 FR 46562.	
219.626	Storage Tanks	8/16/1991	9/9/1994, 59 FR 46562.	
219.628	Leaks	9/27/1993	9/9/1994, 59 FR 46562.	
219.630	Clean Up	8/16/1991	9/9/1994, 59 FR 46562.	

EPA-APPROVED ILLINOIS REGULATIONS AND STATUTES—Continued

Illinois citation	Title/subject	State effective date	EPA approval date	Comments
219.636	Compliance Schedule	9/27/1993	9/9/1994, 59 FR 46562.	
219.637	Recordkeeping and Reporting	9/27/1993	9/9/1994, 59 FR 46562.	
Subpart BB: Polystyrene Plants				
219.640	Applicability	9/27/1993	9/9/1994, 59 FR 46562.	
219.642	Emissions Limitation at Polystyrene Plants.	9/27/1993	9/9/1994, 59 FR 46562.	
219.644	Emissions Testing	9/27/1993	9/9/1994, 59 FR 46562.	
Subpart GG: Marine Terminals				
219.760	Applicability	10/25/1994	4/3/1995, 60 FR 16801.	
219.762	Control Requirements	10/25/1994	4/3/1995, 60 FR 16801.	
219.764	Compliance Certification	10/25/1994	4/3/1995, 60 FR 16801.	
219.766	Leaks	10/25/1994	4/3/1995, 60 FR 16801.	
219.768	Testing and Monitoring	10/25/1994	4/3/1995, 60 FR 16801.	
219.770	Recordkeeping and Reporting	10/25/1994	4/3/1995, 60 FR 16801.	
Subpart HH: Motor Vehicle Refinishing				
219.780	Emission Limitations	5/9/1995	7/25/1996, 61 FR 38577.	
219.782	Alternative Control Requirements	5/9/1995	7/25/1996, 61 FR 38577.	
219.784	Equipment Specifications	1/28/2013	10/6/2014, 79 FR 60070.	
219.786	Surface Preparation Materials	5/9/1995	7/25/1996, 61 FR 38577.	
219.787	Work Practices	5/9/1995	7/25/1996, 61 FR 38577.	
219.788	Testing	5/9/1995	7/25/1996, 61 FR 38577.	
219.789	Monitoring and Recordkeeping for Control Devices.	5/9/1995	7/25/1996, 61 FR 38577.	
219.791	Compliance Date	5/9/1995	7/25/1996, 61 FR 38577.	
Subpart II: Fiberglass Boat Manufacturing Materials				
219.890	Applicability	9/14/2010	3/23/2012, 77 FR 16940.	
219.891	Emission Limitations and Control Requirements.	7/27/2011	3/23/2012, 77 FR 16940.	
219.892	Testing and Monitoring Requirements.	7/27/2011	3/23/2012, 77 FR 16940.	
219.894	Recordkeeping and Reporting Requirements.	7/27/2011	3/23/2012, 77 FR 16940.	
Subpart JJ: Miscellaneous Industrial Adhesives				
219.900	Applicability	9/14/2010	3/23/2012, 77 FR 16940.	
219.901	Emission Limitations and Control Requirements.	7/27/2011	3/23/2012, 77 FR 16940.	
219.902	Testing Requirements	7/27/2011	3/23/2012, 77 FR 16940.	
219.903	Monitoring Requirements	7/27/2011	3/23/2012, 77 FR 16940.	
219.904	Recordkeeping and Reporting Requirements.	7/27/2011	3/23/2012, 77 FR 16940.	
Subpart PP: Miscellaneous Fabricated Product Manufacturing Processes				
219.920	Applicability	9/27/1993	5/7/1996, 61 FR 20455.	
219.923	Permit Conditions	9/27/1993	5/7/1996, 61 FR 20455.	
219.926	Control Requirements	5/9/1995	5/7/1996, 61 FR 20455.	
219.927	Compliance Schedule	9/27/1993	5/7/1996, 61 FR 20455.	
219.928	Testing	9/27/1993	5/7/1996, 61 FR 20455.	
Subpart QQ: Miscellaneous Formulation Manufacturing Processes				
219.940	Applicability	9/27/1993	5/7/1996, 61 FR 20455.	
219.943	Permit Conditions	9/27/1993	5/7/1996, 61 FR 20455.	
219.946	Control Requirements	5/9/1995	5/7/1996, 61 FR 20455.	
219.947	Compliance Schedule	9/27/1993	5/7/1996, 61 FR 20455.	
219.948	Testing	9/27/1993	5/7/1996, 61 FR 20455.	
Subpart RR: Miscellaneous Organic Chemical Manufacturing Processes				
219.960	Applicability	9/27/1993	5/7/1996, 61 FR 20455.	
219.963	Permit Conditions	9/27/1993	5/7/1996, 61 FR 20455.	

EPA-APPROVED ILLINOIS REGULATIONS AND STATUTES—Continued

Illinois citation	Title/subject	State effective date	EPA approval date	Comments
219.966	Control Requirements	5/9/1995	5/7/1996, 61 FR 20455.	
219.967	Compliance Schedule	9/27/1993	5/7/1996, 61 FR 20455.	
219.968	Testing	9/27/1993	5/7/1996, 61 FR 20455.	
Subpart TT: Other Emission Units				
219.980	Applicability	5/9/1995	3/12/1997, 62 FR 11327.	
219.983	Permit Conditions	9/27/1993	5/7/1996, 61 FR 20455.	
219.986	Control Requirements	5/9/1995	5/7/1996, 61 FR 20455.	
219.987	Compliance Schedule	9/27/1993	5/7/1996, 61 FR 20455.	
219.988	Testing	9/27/1993	5/7/1996, 61 FR 20455.	
Subpart UU: Recordkeeping and Reporting				
219.990	Exempt Emission Units	9/27/1993	5/7/1996, 61 FR 20455.	
219.991	Subject Emission Units	9/27/1993	5/7/1996, 61 FR 20455.	
219.Appendix A:	List of Chemicals Defining Synthetic Organic Chemical and Polymer Manufacturing.	9/27/1993	9/9/1994, 59 FR 46562.	
219.Appendix B:	VOM Measurement Techniques for Capture Efficiency (Repealed).	9/27/1993	9/9/1994, 59 FR 46562.	
219.Appendix C:	Reference Methods and Procedures	9/27/1993	9/9/1994, 59 FR 46562.	
219.Appendix D:	Coefficients for the Total Resource Effectiveness Index (TRE) Equation.	9/27/1993	9/9/1994, 59 FR 46562.	
219.Appendix E:	List of Affected Marine Terminals	2/15/1996	4/3/1995, 60 FR 16801.	
219.Appendix G:	TRE Index Measurements for SOCMI Reactors and Distillation Units.	5/9/1995	3/23/1998, 63 FR 13784.	
219.Appendix H:	Baseline VOM Content Limitations for Subpart F, Section 219.212 Cross-Line Averaging.	5/9/1995	2/13/1996, 61 FR 5511.	
Part 223: Standards and Limitations for Organic Material Emissions for Area Sources				
Subpart A: General Provisions				
223.100	Severability	6/8/2009	5/6/2013, 78 FR 26258.	
223.105	Abbreviations and Acronyms	6/8/2009	5/6/2013, 78 FR 26258.	
223.120	Incorporations by Reference	6/8/2009	5/6/2013, 78 FR 26258.	
Subpart B: Consumer and Commercial Products				
223.200	Purpose	6/8/2009	5/6/2013, 78 FR 26258.	
223.201	Applicability	5/4/2012	5/6/2013, 78 FR 26258.	
223.203	Definitions for Subpart B	5/4/2012	5/6/2013, 78 FR 26258.	
223.205	Standards	5/4/2012	5/6/2013, 78 FR 26258.	
223.206	Diluted Products	6/8/2009	5/6/2013, 78 FR 26258.	
223.207	Products Registered Under FIFRA	5/4/2012	5/6/2013, 78 FR 26258.	
223.208	Requirements for Aerosol Adhesives	5/4/2012	5/6/2013, 78 FR 26258.	
223.209	Requirements for Floor Wax Strippers.	6/8/2009	5/6/2013, 78 FR 26258.	
223.210	Products Containing Ozone-Depleting Compounds.	6/8/2009	5/6/2013, 78 FR 26258.	
223.211	Requirements for Adhesive Removers, Aerosol Adhesives, Contact Adhesives, Electrical Cleaners, Electronic Cleaners, Footwear or Leather Care Products, General Purpose Degreasers, and Graffiti Removers.	5/4/2012	5/6/2013, 78 FR 26258.	
223.220	Requirements for Charcoal Lighter Material.	6/8/2009	5/6/2013, 78 FR 26258.	
223.230	Exemptions	6/8/2009	5/6/2013, 78 FR 26258.	
223.240	Innovative Product Exemption	6/8/2009	5/6/2013, 78 FR 26258.	
223.245	Alternative Compliance Plans	6/8/2009	5/6/2013, 78 FR 26258.	
223.250	Product Dating	6/8/2009	5/6/2013, 78 FR 26258.	
223.255	Additional Product Dating Requirements.	6/8/2009	5/6/2013, 78 FR 26258.	
223.260	Most Restrictive Limit	6/8/2009	5/6/2013, 78 FR 26258.	

EPA-APPROVED ILLINOIS REGULATIONS AND STATUTES—Continued

Illinois citation	Title/subject	State effective date	EPA approval date	Comments
223.265	Additional Labeling Requirements for Aerosol Adhesives, Adhesive Removers, Electronic Cleaners, Electrical Cleaners, Energized Electrical Cleaners, and Contact Adhesives.	6/8/2009	5/6/2013, 78 FR 26258.	
223.270	Reporting Requirements	6/8/2009	5/6/2013, 78 FR 26258.	
223.275	Special Recordkeeping Requirements for Consumer Products That Contain Perchloroethylene or Methylene Chloride.	6/8/2009	5/6/2013, 78 FR 26258.	
223.280	Calculating Illinois Sales	6/8/2009	5/6/13, 78 FR 26258.	
223.285	Test Methods	6/8/2009	5/6/2013, 78 FR 26258.	
Subpart C: Architectural and Industrial Maintenance Coatings				
223.300	Purpose	6/8/2009	5/6/2013, 78 FR 26258.	
223.305	Applicability	5/4/2012	5/6/2013, 78 FR 26258.	
223.307	Definitions for Subpart C	6/8/2009	5/6/2013, 78 FR 26258.	
223.310	Standards	6/8/2009	5/6/2013, 78 FR 26258.	
223.320	Container Labeling Requirements	6/8/2009	5/6/2013, 78 FR 26258.	
223.330	Reporting Requirements	6/8/2009	5/6/2013, 78 FR 26258.	
223.340	Compliance Provisions and Test Methods.	6/8/2009	5/6/2013, 78 FR 26258.	
223.350	Alternative Test Methods	6/8/2009	5/6/2013, 78 FR 26258.	
223.360	Methacrylate Traffic Coating Markings.	6/8/2009	5/6/2013, 78 FR 26258.	
223.370	Test Methods	6/8/2009	5/6/2013, 78 FR 26258.	
Part 225: Control of Emissions From Large Combustion Sources				
Subpart A: General Provisions				
225.120	Abbreviations and Acronyms	8/31/2007	10/16/2007, 72 FR 58528.	
225.130	Definitions	8/31/2007	10/16/2007, 72 FR 58528.	
225.140	Incorporations by Reference	8/31/2007	10/16/2007, 72 FR 58528.	
225.150	Commence Commercial Operation	8/31/2007	10/16/2007, 72 FR 58528.	
Subpart B: Control of Mercury Emissions From Coal-Fired Electric Generating Units				
225.233	Multi-Pollutant Standard (MPS)	6/26/2009	7/6/2012, 77 FR 39943	Only (a), (b), (e), and (g).
225.291	Combined Pollutant Standard: Purpose.	12/7/2015	2/28/2018, 83 FR 8612.	
225.292	Applicability of the Combined Pollutant Standard.	12/7/2015	2/28/2018, 83 FR 8612.	
225.293	Combined Pollutant Standard: Notice of Intent.	12/7/2015	2/28/2018, 83 FR 8612.	
225.295	Combined Pollutant Standard: Emission Standards for NO_X and SO_2.	12/7/2015	2/28/2018, 83 FR 8612	Except (a)(4).
225.296	Combined Pollutant Standard: Control Technology Requirements for NO_X, SO_2, and PM Emissions.	12/7/2015	2/28/2018, 83 FR 8612	Except (d).
Subpart C: Clean Air Act Interstate Rule (CAIR) SO_2 Trading Program				
225.300	Purpose	8/31/2007	10/16/2007, 72 FR 58528.	
225.305	Applicability	8/31/2007	10/16/2007, 72 FR 58528.	
225.310	Compliance Requirements	8/31/2007	10/16/2007, 72 FR 58528.	
225.315	Appeal Procedures	8/31/2007	10/16/2007, 72 FR 58528.	
225.320	Permit Requirements	8/31/2007	10/16/2007, 72 FR 58528.	
225.325	Trading Program	8/31/2007	10/16/2007, 72 FR 58528.	
Subpart D: CAIR NO_X Annual Trading Program				
225.400	Purpose	8/31/2007	10/16/2007, 72 FR 58528.	
225.405	Applicability	8/31/2007	10/16/2007, 72 FR 58528.	
225.410	Compliance Requirements	8/31/2007	10/16/2007, 72 FR 58528.	
225.415	Appeal Procedures	8/31/2007	10/16/2007, 72 FR 58528.	
225.420	Permit Requirements	8/31/2007	10/16/2007, 72 FR 58528.	
225.425	Annual Trading Budget	8/31/2007	10/16/2007, 72 FR 58528.	
225.430	Timing for Annual Allocations	8/31/2007	10/16/2007, 72 FR 58528.	

EPA-APPROVED ILLINOIS REGULATIONS AND STATUTES—Continued

Illinois citation	Title/subject	State effective date	EPA approval date	Comments
225.435	Methodology for Calculating Annual Allocations.	8/31/2007	10/16/2007, 72 FR 58528.	
225.440	Annual Allocations	8/31/2007	10/16/2007, 72 FR 58528.	
225.445	New Unit Set-Aside (NUSA)	8/31/2007	10/16/2007, 72 FR 58528.	
225.450	Monitoring, Recordkeeping and Reporting Requirements for Gross Electrical Output and Useful Thermal Energy.	8/31/2007	10/16/2007, 72 FR 58528.	
225.455	Clean Air Set-Aside (CASA)	8/31/2007	10/16/2007, 72 FR 58528.	
225.460	Energy Efficiency and Conservation, Renewable Energy, and Clean Technology Projects.	8/31/2007	10/16/2007, 72 FR 58528.	
225.465	Clean Air Set-Aside (CASA) Allowances.	8/31/2007	10/16/2007, 72 FR 58528.	
225.470	Clean Air Set-Aside (CASA) Applications.	8/31/2007	10/16/2007, 72 FR 58528.	
225.475	Agency Action on Clean Air Set-Aside (CASA) Applications.	8/31/2007	10/16/2007, 72 FR 58528.	
225.480	Compliance Supplement Pool	8/31/2007	10/16/2007, 72 FR 58528.	
Subpart E: CAIR NO_X Ozone Season Trading Program				
225.500	Purpose	8/31/2007	10/16/2007, 72 FR 58528.	
225.505	Applicability	8/31/2007	10/16/2007, 72 FR 58528.	
225.510	Compliance Requirements	8/31/2007	10/16/2007, 72 FR 58528.	
225.515	Appeal Procedures	8/31/2007	10/16/2007, 72 FR 58528.	
225.520	Permit Requirements	8/31/2007	10/16/2007, 72 FR 58528.	
225.525	Ozone Season Trading Budget	8/31/2007	10/16/2007, 72 FR 58528.	
225.530	Timing for Ozone Season Allocations	8/31/2007	10/16/2007, 72 FR 58528.	
225.535	Methodology for Calculating Ozone Season Allocations.	8/31/2007	10/16/2007, 72 FR 58528.	
225.540	Ozone Season Allocations	8/31/2007	10/16/2007, 72 FR 58528.	
225.545	New Unit Set-Aside (NUSA)	8/31/2007	10/16/2007, 72 FR 58528.	
225.550	Monitoring, Recordkeeping and Reporting Requirements for Gross Electrical Output and Useful Thermal Energy.	8/31/2007	10/16/2007, 72 FR 58528.	
225.555	Clean Air Set-Aside (CASA)	8/31/2007	10/16/2007, 72 FR 58528.	
225.560	Energy Efficiency and Conservation, Renewable Energy, and Clean Technology Projects.	8/31/2007	10/16/2007, 72 FR 58528.	
225.565	Clean Air Set-Aside (CASA) Allowances.	8/31/2007	10/16/2007, 72 FR 58528.	
225.570	Clean Air Set-Aside (CASA) Applications.	8/31/2007	10/16/2007, 72 FR 58528.	
225.575	Agency Action on Clean Air Set-Aside (CASA) Applications.	8/31/2007	10/16/2007, 72 FR 58528.	
225.Appendix A	Specified EGUs for Purposes of the CPS Coal-Fired Boilers as of July 1, 2016.	12/7/2015	2/28/2018, 83 FR 8612.	
Part 226: Standards and Limitations for Certain Sources of Lead				
226.100	Severability	4/21/2014	3/28/2018, 83 FR 13198.	
226.105	Scope and Organization	4/21/2014	3/28/2018, 83 FR 13198.	
226.110	Abbreviations and Acronyms	4/21/2014	3/28/2018, 83 FR 13198.	
226.115	Definitions	4/21/2014	3/28/2018, 83 FR 13198.	
226.120	Incorporations by Reference	4/21/2014	3/28/2018, 83 FR 13198.	
226.125	Applicability	4/21/2014	3/28/2018, 83 FR 13198.	
226.130	Compliance Date	4/21/2014	3/28/2018, 83 FR 13198.	
226.140	Lead Emission Standards	4/21/2014	3/28/2018, 83 FR 13198.	
226.150	Operational Monitoring for Control Device.	4/21/2014	3/28/2018, 83 FR 13198.	
226.155	Total Enclosure	4/21/2014	3/28/2018, 83 FR 13198.	
226.160	Operational Measurement for Total Enclosure.	4/21/2014	3/28/2018, 83 FR 13198.	
226.165	Inspection	4/21/2014	3/28/2018, 83 FR 13198.	
226.170	Lead Fugitive Dust Operating Program.	4/21/2014	3/28/2018, 83 FR 13198.	
226.175	Emissions Testing	4/21/2014	3/28/2018, 83 FR 13198.	
226.185	Recordkeeping and Reporting	4/21/2014	3/28/2018, 83 FR 13198.	

EPA-APPROVED ILLINOIS REGULATIONS AND STATUTES—Continued

Illinois citation	Title/subject	State effective date	EPA approval date	Comments
Subchapter i: Open Burning				
Part 237: Open Burning				
Subpart A: General Provisions				
237.101	Definitions	9/7/1971	5/31/1972, 37 FR 10862	Approved as Rule 401.
237.102	Prohibitions	9/7/1971	5/31/1972, 37 FR 10862	Approved as Rule 402.
237.103	Explosive Wastes	9/7/1971	5/31/1972, 37 FR 10862	Approved as Rule 405.
237.110	Local Enforcement	9/7/1971	5/31/1972, 37 FR 10862	Approved as Rule 406.
237.120	Exemptions	9/7/1971	5/31/1972, 37 FR 10862	Approved as Rule 403.
Subpart B: Permits				
237.201	Permits	9/7/1971	5/31/1972, 37 FR 10862	Approved as Rule 404.
Subchapter k: Emission Standards and Limitations for Mobile Sources				
Part 240: Mobile Sources				
Subpart A: Definitions and General Provisions				
240.101	Preamble	12/20/1994	8/13/2014, 79 FR 47377.	
240.102	Definitions	2/1/2012	8/13/2014, 79 FR 47377.	
240.103	Prohibitions	4/14/1972	8/13/2014, 79 FR 47377.	
240.104	Inspection	2/1/2012	8/13/2014, 79 FR 47377.	
240.105	Penalties	2/1/2012	8/13/2014, 79 FR 47377.	
240.106	Determination of Violation	2/1/2012	8/13/2014, 79 FR 47377.	
240.107	Incorporations by Reference	3/18/2011	8/13/2014, 79 FR 47377.	
Subpart B: Emissions				
240.121	Smoke Emissions	2/1/2012	8/13/2014, 79 FR 47377.	
240.122	Diesel Engine Emissions Standards for Locomotives.	4/7/1992	8/13/2014, 79 FR 47377.	
240.123	Liquid Petroleum Gas Fuel Systems	2/1/2012	8/13/2014, 79 FR 47377.	
Subpart C: Smoke Opacity Standards and Test Procedures for Diesel-Powered Heavy Duty Vehicles				
240.140	Applicability	2/26/2001	8/13/2014, 79 FR 47377.	
240.141	Smoke Opacity Standards and Test Procedures for Diesel-Powered Heavy Duty Vehicles.	2/26/2001	8/13/2014, 79 FR 47377.	
Subpart D: Steady-State Idle Mode Test Emission Standards				
240.151	Applicability	2/1/2012	8/13/2014, 79 FR 47377.	
240.152	Steady-State Idle Mode Vehicle Exhaust Emission Standards.	3/18/2011	8/13/2014, 79 FR 47377.	
240.153	Compliance Determination	3/18/2011	8/13/2014, 79 FR 47377.	
Subpart F: Evaporative Test Standards				
240.171	Applicability	2/1/2012	8/13/2014, 79 FR 47377.	
240.172	Evaporative System Integrity Test Standards.	7/13/1998	8/13/2014, 79 FR 47377.	
Subpart G: On-Road Remote Sensing Test Emission Standards				
240.181	Applicability	3/18/2011	8/13/2014, 79 FR 47377.	
240.182	On-Road Remote Sensing Emission Standards.	3/18/2011	8/13/2014, 79 FR 47377.	
240.183	Compliance Determination	7/13/1998	8/13/2014, 79 FR 47377.	
Subpart H: On-Board Diagnostic Test Standards				
240.191	Applicability	3/18/2011	8/13/2014, 79 FR 47377.	
240.192	On-Board Diagnostic Test Standards	12/18/2001	8/13/2014, 79 FR 47377.	
240.193	Compliance Determination	12/18/2001	8/13/2014, 79 FR 47377.	

EPA-APPROVED ILLINOIS REGULATIONS AND STATUTES—Continued

Illinois citation	Title/subject	State effective date	EPA approval date	Comments
Subpart I: Visual Inspection Test Standards				
240.201	Applicability	2/1/2012	8/13/2014, 79 FR 47377.	
240.202	Visual Inspection Test Standards	2/1/2012	8/13/2014, 79 FR 47377.	
240.203	Compliance Determination	2/1/2012	8/13/2014, 79 FR 47377.	
240.Appendix A:	Rule Into Section Table	2/1/2012	8/13/2014, 79 FR 47377.	
240.Appendix B:	Section Into Rule Table	2/1/2012	8/13/2014, 79 FR 47377.	
Part 241: Clean Fuel Fleet Program				
Subpart A: General Provisions				
241.101	Other Definitions	9/11/1995	3/19/1996, 61 FR 11139.	
241.102	Definitions	9/11/1995	3/19/1996, 61 FR 11139.	
241.103	Abbreviations	9/11/1995	3/19/1996, 61 FR 11139.	
241.104	Incorporations by Reference	9/11/1995	3/19/1996, 61 FR 11139.	
Subpart B: General Requirements				
241.110	Applicability	9/11/1995	3/19/1996, 61 FR 11139.	
241.111	Exemptions	9/11/1995	3/19/1996, 61 FR 11139.	
241.112	Registration of Fleet Owners or Operators.	9/11/1995	3/19/1996, 61 FR 11139.	
241.113	Control Requirements	11/25/1997	2/17/1999, 64 FR 7788.	
241.114	Conversions	9/11/1995	3/19/1996, 61 FR 11139.	
241.115	Operating Requirements	9/11/1995	3/19/1996, 61 FR 11139.	
Subpart C: Credits				
241.130	Clean Fuel Fleet Credit Program	11/25/1997	2/17/1999, 64 FR 7788.	
241.131	Credit Provisions	9/11/1995	3/19/1996, 61 FR 11139.	
Subpart D: Recordkeeping and Reporting				
241.140	Reporting Requirements	11/25/1997	2/17/1999, 64 FR 7788.	
241.141	Recordkeeping Requirements	9/11/1995	3/19/1996, 61 FR 11139.	
241.142	Report of Credit Activities	9/11/1995	3/19/1996, 61 FR 11139.	
241.Appendix A:	Emission Standards for Clean Fuel Vehicles.	9/11/1995	3/19/1996, 61 FR 11139.	
241.Appendix B:	Credit Values	11/25/1997	2/17/1999, 64 FR 7788.	
Subchapter I: Air Quality Standards and Episodes				
Part 243: Air Quality Standards				
Subpart A: General Provisions				
243.101	Definitions	7/29/2013	5/20/2015, 80 FR 28835.	
243.102	Scope	7/29/2013	5/20/2015, 80 FR 28835.	
243.103	Applicability	7/29/2013	5/20/2015, 80 FR 28835.	
243.104	Nondegradation	10/25/2011	5/23/2013, 78 FR 30770.	
243.105	Air Quality Monitoring Data Influenced by Exceptional Events.	1/23/2017	7/18/2017, 82 FR 32771.	
243.106	Monitoring	4/14/1972	2/21/1980, 45 FR 11472.	
243.107	Reference Conditions	11/27/2013	6/10/2016, 81 FR 37517.	
243.108	Incorporation by Reference	1/23/2017	7/18/2017, 82 FR 32771.	
Subpart B: Standards and Measurement Methods				
243.120	PM_{10} and $PM_{2.5}$	1/23/2017	7/18/2017, 82 FR 32771.	
243.122	Sulfur Oxides (Sulfur Dioxide), and	11/27/2013	6/10/2016, 81 FR 37517.	
243.123	Carbon Monoxide	7/29/2013	5/20/2015, 80 FR 28835.	
243.124	Nitrogen Oxides (Nitrogen Dioxide as Indicator).	1/23/2017	7/18/2017, 82 FR 32771.	
243.125	Ozone	1/23/2017	7/18/2017, 82 FR 32771.	
243.126	Lead, and	7/29/2013	5/20/2015, 80 FR 28835.	
243.TABLE A	Schedule of Exceptional Event Flagging and Documentation Submission for New or Revised NAAQS.	1/23/2017	7/18/2017, 82 FR 32771.	

EPA-APPROVED ILLINOIS REGULATIONS AND STATUTES—Continued

Illinois citation	Title/subject	State effective date	EPA approval date	Comments
Part 244: Episodes				
Subpart A: Definitions and General Provisions				
244.101	Definitions	5/15/1992	1/12/1993, 58 FR 3844.	
244.102	Responsibility of the Agency	8/18/1972	2/21/1980, 45 FR 11472	Approved as Rule 402.
244.103	Determination of Required Actions	8/18/1972	2/21/1980, 45 FR 11472	Approved as Rule 402.
244.104	Determination of Atmospheric Conditions.	8/18/1972	2/21/1980, 45 FR 11472	Approved as Rule 402.
244.105	Determination of Expected Contaminant Emissions.	8/18/1972	2/21/1980, 45 FR 11472	Approved as Rule 402.
244.106	Monitoring	5/15/1992	1/12/1993, 58 FR 3844.	
244.107	Determination of Areas Affected	5/15/1992	1/12/1993, 58 FR 3844.	
244.108	Failure To Comply With Episode Requirements.	8/18/1972	2/21/1980, 45 FR 11472	Approved as Rule 402.
244.109	Sealing of Offenders	8/18/1972	2/21/1980, 45 FR 11472	Approved as Rule 402.
Subpart B: Local Agency Responsibilities				
244.121	Local Agency Responsibilities	5/15/1992	1/12/1993, 58 FR 3844.	
Subpart C: Episode Action Plans				
244.141	Requirement for Plans	8/18/1972	2/21/1980, 45 FR 11472	Approved as Rule 404.
244.142	Facilities for Which Action Plans Are Required.	8/18/1972	2/21/1980, 45 FR 11472	Approved as Rule 404.
244.143	Submission of Plans	8/18/1972	2/21/1980, 45 FR 11472	Approved as Rule 404.
244.144	Contents of Plans	8/18/1972	2/21/1980, 45 FR 11472	Approved as Rule 404.
244.145	Processing Procedures	8/18/1972	2/21/1980, 45 FR 11472	Approved as Rule 404.
Subpart D: Episode Stages				
244.161	Advisory, Alert and Emergency Levels.	5/15/1992	1/12/1993, 58 FR 3844.	
244.162	Criteria for Declaring an Advisory	5/15/1992	1/12/1993, 58 FR 3844.	
244.163	Criteria for Declaring a Yellow Alert	5/15/1992	1/12/1993, 58 FR 3844.	
244.164	Criteria for Declaring a Red Alert	8/18/1972	2/21/1980, 45 FR 11472	Approved as Rule 405(e).
244.165	Criteria for Declaring an Emergency	8/18/1972	2/21/1980, 45 FR 11472	Approved as Rule 405(e).
244.166	Criteria for Terminating Advisory, Alert and Emergency.	5/15/1992	1/12/1993, 58 FR 3844.	
244.167	Episode Stage Notification	5/15/1992	1/12/1993, 58 FR 3844.	
244.168	Contents of Episode Stage Notification.	5/15/1992	1/12/1993, 58 FR 3844.	
244.169	Actions During Episode Stages	5/15/1992	1/12/1993, 58 FR 3844.	
244.Appendix D:	Required Emission Reduction Actions.	5/15/1992	1/12/1993, 58 FR 3844.	
Chapter II: Environmental Protection Agency				
Part 252: Public Participation in the Air Pollution Permit Program for Major Sources in Nonattainment Areas				
Subpart A: Introduction				
252.101	Purpose	6/1/1984	9/25/1985, 50 FR 38803.	
252.102	Applicability	6/1/1984	9/25/1985, 50 FR 38803.	
252.103	Definitions	6/1/1984	9/25/1985, 50 FR 38803.	
Subpart B: Procedures for Public Review				
252.201	Notice and Opportunity To Comment	6/1/1984	9/25/1985, 50 FR 38803.	
252.202	Draft Permit and Denial Letter	6/1/1984	9/25/1985, 50 FR 38803.	
252.203	Availability of Documents	6/1/1984	9/25/1985, 50 FR 38803.	
252.204	Opportunity for Public Hearing	6/1/1984	9/25/1985, 50 FR 38803.	
Part 254: Annual Emissions Report				
Subpart A: General Provisions				
254.101	Purpose	7/17/2001	5/15/2002, 67 FR 34614.	
254.102	Applicability	4/20/2012	7/3/2013, 67 FR 40013.	
254.103	Definitions	7/17/2001	5/15/2002, 67 FR 34614.	

EPA-APPROVED ILLINOIS REGULATIONS AND STATUTES—Continued

Illinois citation	Title/subject	State effective date	EPA approval date	Comments
254.120	Applicable Pollutants for Annual Emissions Reporting.	7/17/2001	5/15/2002, 67 FR 34614.	
254.132	Failure To File a Complete Report	7/17/2001	5/15/2002, 67 FR 34614.	
254.133	Voluntary Submittal of Data	5/14/1993	5/15/2002, 67 FR 34614.	
254.134	Retention of Records	7/17/2001	5/15/2002, 67 FR 34614.	
254.135	Reporting of Errors	7/17/2001	5/15/2002, 67 FR 34614.	
254.136	Confidentiality and Trade Secret Protection.	7/17/2001	5/15/2002, 67 FR 34614.	
254.137	Reporting Schedule	7/17/2001	5/15/2002, 67 FR 34614.	
254.138	Issuance of Source Inventory Report	7/17/2001	5/15/2002, 67 FR 34614.	
Subpart B: Reporting Requirements for Large Sources				
254.203	Contents of Subpart B Annual Emissions Report.	7/17/2001	5/15/2002, 67 FR 34614.	
254.204	Complete Reports	7/17/2001	5/15/2002, 67 FR 34614.	
Subpart C: Reporting Requirements for Other Sources				
254.303	Contents of Subpart C Annual Emissions Report.	7/17/2001	5/15/2002, 67 FR 34614.	
254.306	Complete Reports	7/17/2001	5/15/2002, 67 FR 34614.	
Subpart E: Seasonal Emissions Report Under ERMS				
254.501	Contents of a Seasonal Emissions Report.	7/17/2001	5/15/2002, 67 FR 34614.	
Part 255: General Conformity: Criteria and Procedures				
255.100	Purpose	3/6/1997	12/23/1997, 62 FR 67000.	
255.110	Federal Requirement	3/6/1997	12/23/1997, 62 FR 67000.	
255.120	Applicability	3/6/1997	12/23/1997, 62 FR 67000.	
255.140	Definitions	3/6/1997	12/23/1997, 62 FR 67000.	
255.150	Abbreviations	3/6/1997	12/23/1997, 62 FR 67000.	
255.160	Incorporations by Reference	3/6/1997	12/23/1997, 62 FR 67000.	
255.170	Activities Exempt From Conformity Analysis.	3/6/1997	12/23/1997, 62 FR 67000.	
255.180	Conformity Analysis	3/6/1997	12/23/1997, 62 FR 67000.	
255.190	Reporting Requirements	3/6/1997	12/23/1997, 62 FR 67000.	
255.200	Public Participation	3/6/1997	12/23/1997, 62 FR 67000.	
255.210	Frequency of Conformity Determinations.	3/6/1997	12/23/1997, 62 FR 67000.	
255.220	Criteria for Determining Conformity of General Federal Actions.	3/6/1997	12/23/1997, 62 FR 67000.	
255.230	Procedures for Conformity Determinations of General Federal Actions.	3/6/1997	12/23/1997, 62 FR 67000.	
255.240	Mitigation of Air Quality Impacts	3/6/1997	12/23/1997, 62 FR 67000.	
Part 276: Procedures To Be Followed in the Performance of Inspections of Motor Vehicle Emissions				
Subpart A: General Provisions				
276.101	Purpose and Applicability	6/28/2011	8/13/2014, 79 FR 47377.	
276.102	Definitions	1/30/2012	8/13/2014, 79 FR 47377.	
276.103	Abbreviations	6/28/2011	8/13/2014, 79 FR 47377.	
276.104	Incorporations by Reference	1/30/2012	8/13/2014, 79 FR 47377.	
276.105	Sunset Provisions	1/30/2012	8/13/2014, 79 FR 47377.	
Subpart B: Vehicle Emissions Inspection Procedures				
276.201	General Description of Vehicle Emissions Inspection Procedures.	1/30/2012	8/13/2014, 79 FR 47377.	
276.202	Pollutants To Be Tested—Exhaust Test.	9/28/1998	8/13/2014, 79 FR 47377.	
276.203	Dilution—Steady-State Idle Exhaust Test and Transient Loaded Mode Exhaust Test.	6/28/2011	8/13/2014, 79 FR 47377.	
276.204	Steady-State Idle Exhaust Emissions Test Procedures.	6/28/2011	8/13/2014, 79 FR 47377.	

EPA-APPROVED ILLINOIS REGULATIONS AND STATUTES—Continued

Illinois citation	Title/subject	State effective date	EPA approval date	Comments
276.205	Evaporative System Integrity Test Procedures.	6/28/2011	8/13/2014, 79 FR 47377.	
276.206	Engine and Fuel Type Modifications	6/14/1996	8/13/2014, 79 FR 47377.	
276.208	On-Road Remote Sensing Test Procedures.	9/28/1998	8/13/2014, 79 FR 47377.	
276.209	On-Board Diagnostic Test Procedures.	6/28/2011	8/13/2014, 79 FR 47377.	
276.210	Visual Inspection Test Procedures ...	1/30/2012	8/13/2014, 79 FR 47377	276.210
Subpart C: Sticker or Certificate Issuance, Display, and Possession				
276.301	General Requirements	6/28/2011	8/13/2014, 79 FR 47377.	
276.302	Determination of Affected Counties ..	1/30/2012	8/13/2014, 79 FR 47377.	
276.303	Emissions Inspection Sticker or Certificate Design and Content.	6/28/2011	8/13/2014, 79 FR 47377.	
Subpart D: Waiver and Economic Hardship Extension Requirements				
276.401	Waiver Requirements	6/28/2011	8/13/2014, 79 FR 47377.	
276.403	Denial or Issuance of Waiver	1/30/2012	8/13/2014, 79 FR 47377.	
276.404	Economic Hardship Extension Requirements.	1/30/2012	8/13/2014, 79 FR 47377.	
276.405	Outside of Affected Counties Annual Exemption Requirements.	1/30/2012	8/13/2014, 79 FR 47377.	
Subpart E: Test Equipment Specifications				
276.501	General Requirements	6/28/2011	8/13/2014, 79 FR 47377.	
276.502	Steady-State Idle Exhaust Test Analysis Systems Functional Requirements.	6/28/2011	8/13/2014, 79 FR 47377.	
276.503	Steady-State Idle Exhaust Test Analysis Systems Performance Criteria.	6/28/2011	8/13/2014, 79 FR 47377.	
276.504	Evaporative System Integrity Test Functional Requirements and Performance Criteria.	6/28/2011	8/13/2014, 79 FR 47377.	
276.507	On-Road Remote Sensing Test Systems Functional Requirements and Performance Criteria.	6/28/2011	8/13/2014, 79 FR 47377.	
276.508	On-Board Diagnostic Test Systems Functional Requirements and Performance Criteria.	6/28/2011	8/13/2014, 79 FR 47377.	
Subpart F: Equipment Maintenance and Calibration				
276.601	Steady-State Idle Test Equipment Maintenance.	9/28/1998	8/13/2014, 79 FR 47377.	
276.602	Steady-State Idle Test Equipment Calibration.	6/28/2011	8/13/2014, 79 FR 47377.	
276.603	Evaporative System Integrity Test Maintenance and Calibration.	9/28/1998	8/13/2014, 79 FR 47377.	
276.604	Record Keeping	6/28/2011	8/13/2014, 79 FR 47377.	
276.606	On-Road Remote Sensing Test Systems Maintenance and Calibration.	9/28/1998	8/13/2014, 79 FR 47377.	
276.607	On-Board Diagnostic Test Systems Maintenance and Calibration.	9/28/1998	8/13/2014, 79 FR 47377.	
Subpart G: Fleet Self-Testing Requirements				
276.701	General Requirements	6/28/2011	8/13/2014, 79 FR 47377.	
276.702	Fleet Inspection Permit	6/28/2011	8/13/2014, 79 FR 47377.	
276.703	Fleet Inspection Permittee Operating Requirements.	6/28/2011	8/13/2014, 79 FR 47377.	
276.704	Private Official Inspection Station Auditing and Surveillance.	6/28/2011	8/13/2014, 79 FR 47377.	
276.705	Fleet Vehicle Inspection Procedures (Renumbered).	6/14/1996	8/13/2014, 79 FR 47377.	
Subpart H: Grievance Procedure				
276.801	General Requirements	6/14/1996	8/13/2014, 79 FR 47377.	

EPA-APPROVED ILLINOIS REGULATIONS AND STATUTES—Continued

Illinois citation	Title/subject	State effective date	EPA approval date	Comments
276.802	Procedure for Filing Grievance	6/28/2011	8/13/2014, 79 FR 47377.	
276.803	Agency Investigation	6/28/2011	8/13/2014, 79 FR 47377.	
276.804	Review of Agency's Determination	6/14/1996	8/13/2014, 79 FR 47377.	
Subpart I: Notices				
276.901	General Requirements	6/28/2011	8/13/2014, 79 FR 47377.	
276.902	Vehicle Emissions Test Notice	6/28/2011	8/13/2014, 79 FR 47377.	
Subpart J: Reciprocity With Other Jurisdictions				
276.1001	Requirements for Vehicles Registered in Affected Counties and Located in Other Jurisdictions Requiring Vehicle Emissions Inspection.	6/28/2011	8/13/2014, 79 FR 47377.	
276.1002	Requirements for Vehicles Registered in Other Jurisdictions Requiring Vehicle Emissions Inspection and Located in an Affected County.	6/28/2011	8/13/2014, 79 FR 47377.	
Subpart K: Repair Facility Performance Reporting				
276.1101	Requirements for Collecting and Reporting Data Pertaining to the Repair of Vehicles That Failed or Were Rejected From an Emissions Inspection.	6/28/2011	8/13/2014, 79 FR 47377.	
Part 283: General Procedures for Emissions Tests Averaging				
Subpart A: Introduction				
283.110	Purpose	9/11/2000	5/9/2003, 68 FR 24885.	
283.120	Applicability	9/11/2000	5/9/2003, 68 FR 24885.	
283.130	Definitions	9/11/2000	5/9/2003, 68 FR 24885.	
Subpart B: Procedures for Averaging of Test Results				
283.210	Criteria for Averaging Tests	9/11/2000	5/9/2003, 68 FR 24885.	
283.220	Test Plan Requirements	9/11/2000	5/9/2003, 68 FR 24885.	
283.230	Changes to the Test Plan	9/11/2000	5/9/2003, 68 FR 24885.	
283.240	Averaging Procedure	9/11/2000	5/9/2003, 68 FR 24885.	
283.250	Compliance Determination	9/11/2000	5/9/2003, 68 FR 24885.	
State Statutes				
20 ILCS 605/46.13a.	Civil Administrative Code	9/21/1992	8/30/1993, 58 FR 45448	Subsection 46.13(a) [Approved Under Public Act 87–1177].
415 ILCS 5/9	Illinois Environmental Protection Act	6/21/1996	5/29/2002, 67 FR 37323	Section 9(f) [Approved Under Public Act 89–491].
415 ILCS 5/9.1	Illinois Environmental Protection Act	9/17/1991	12/17/1992, 57 FR 59928	(Ch. 111 1/2, par. 1009.1) par. 1009.1(a), (b), (c), (d) and (f). [Approved Under Public Act 87–555].
415 ILCS 5/9.9	Illinois Environmental Protection Act	7/1/2001	11/8/2001, 66 FR 56454	Section 9.9(f) [Approved Under Public Act 92–0012].
415 ILCS 5/39.5	Illinois Environmental Protection Act	9/26/1992	8/30/1993, 58 FR 45448	Subsection 20 [Approved Under Public Act 87–1213].
625 ILCS 5/13B	Illinois Vehicle Code	1/18/1994	7/25/1996, 61 FR 38582	625 ILCS 5/13B [Approved Under Public Act 88–533].

(d) *EPA approved state source-specific requirements.*

EPA-APPROVED ILLINOIS SOURCE-SPECIFIC REQUIREMENTS

Name of source	Order/permit No.	State effective date	EPA approval date	Comments
Alumax Incorporated, Morris, IL	PCB AS 92–13	9/1/1994	2/1/1996, 61 FR 3575.	
Argonne National Laboratory	PCB AS 03–4	12/18/2003	7/28/2004, 69 FR 44967.	
Bema Film Systems, Incorporated, DuPage Co.	PCB AS 00–11	1/18/2001	11/30/2001, 66 FR 59702.	
Central Can Company (CCC), Chicago, IL.	PCB AS 94–18	8/6/1998, eff. 7/1/1991	3/18/1999, 64 FR 13346.	
Chase Products Company, Broadview (Cook Co.).	PCB AS 94–4	5/16/1996	6/9/1997, 62 FR 31341.	
City Water, Light & Power, City of Springfield.	9090046	6/23/2011	7/6/2012, 77 FR 39943	Joint Construction and Operating Permit.
CP–D Acquisition Company, LLC. (formerly Cromwell-Phoenix, Inc).	PCB AS 03–05	11/20/2003	10/29/2008, 73 FR 64213.	
Ford Motor Company	PCB, AS 02–03	11/21/2002	3/22/2004, 69 FR 13239.	
Ford Motor Company Chicago Assembly Plant.	PCB, AS 05–5	9/1/2005	9/6/2006, 71 FR 52464.	
Greif Packaging, LLC, Naperville, DuPage Co.	PCB AS 2011–01.	4/5/2012	10/22/2012, 77 FR 64422.	
IL Power Company's Baldwin Power Station.	PCB 79–7	9/8/1983	4/18/1990, 55 FR 14419	Emission limits within Paragraph 1 of Final Order.
IPH/Ameren Energy	PCB 14–10	11/21/2013	12/21/2015, 80 FR 79261	Certificate of Acceptance, filed with the Illinois Pollution Control Board Clerk's Office 12/20/13.
Kincaid Generation, LLC	9050022	6/24/2011	7/6/2012, 77 FR 39943	Joint Construction and Operating Permit.
Laclede Steel Sulfur dioxide plan	93070030	11/18/1993	4/20/1994, 59 FR 18752	FESOP for boilers and reheat furnaces.
Leisure Properties LLC/D/B/A Crownline Boats, West Frankfort, Illinois.	PCB AS 04–01	7/22/2004	4/20/2012, 77 FR 23622	Effective date identified in error as 7/22/2002 in the document heading. Due to ownership change, the Board transferred the adjusted standard to Leisure Properties LLC D/B/A Crownline Boats by Board order AS04-I, effective 10/7/2010.
Louis Berkman Company, d/b/a/ the Swenson Spreader Company's Lindenwood, Ogle Co.	PCB, AS 97–5	5/7/1998	5/27/2004, 69 FR 30224.	
LTV Steel Company, Inc.	98120091	5/14/1999	7/14/1999, 64 FR 37847	Federally Enforceable State Operating Permit.
Midwest Generation, LLC	PCB 12–121	8/23/2012	7/20/2015, 80 FR 42726	Certificate of Acceptance, dated 8/24/2012, filed with the Illinois Pollution Control Board Clerk's Office 8/27/2012.
Midwest Generation, LLC	PCB 13–24	4/4/2013	7/20/2015, 80 FR 42726	Certificate of Acceptance, dated 5/16/13, filed with the Illinois Pollution Control Board Clerk's Office 5/17/2013.
National Steel Corporation, Granite City Division.	95010005	10/21/1997	3/11/1998, 63 FR 11842	Joint Construction and Operating Permit.
Quantum Chemical Corporation, Morris, Aux Sable Township, Grundy Co.	PCB AS 92–14	10/7/1993	4/3/1995, 60 FR 16803	adjusted standard.
Reynolds Metals Company's McCook Sheet and Plate Plant in McCook, IL (in Cook Co.).	PCB AS 91–8	9/21/1995	1/21/1997, 62 FR 2916.	
Royal Fiberglass Products, d/b/a Viking Pools.	PCB AS 09–14	9/5/2013	7/14/2014, 79 FR 40673.	
Solar Corporation, Libertyville, IL	PCB AS 94–2	7/20/1995	2/23/1998, 63 FR 8855.	
Sun Chemical Corporation, Northlake, IL.	PCB AS 99–4	5/20/1999	9/13/1999, 64 FR 49400.	
Vonco Products, Incorporated, Lake Co.	PCB AS 00–12	1/18/2001	11/30/2001, 66 FR 59704.	

(e) *EPA approved nonregulatory and quasi-regulatory provisions.*

EPA-APPROVED ILLINOIS NONREGULATORY AND QUASI-REGULATORY PROVISIONS

Name of SIP provision	Applicable geographic or nonattainment area	State submittal date	EPA approval date	Comments
Air quality surveillance network.	State-wide	12/20/1979	3/4/1981, 46 FR 15137.	
Coal ban	Chicago Area	10/22/1973	3/2/1976, 41 FR 8956.	
Compliance schedules	State-wide	3/13/1973, 4/3/1973, 5/3/1973, 6/15/1973, and 8/7/1973	3/2/1976, 41 FR 8956.	
Ozone (8-hour, 2008) certification of emissions statement regulations.	Chicago and St. Louis areas.	5/9/2017	7/11/2017, 82 FR 31913	Certification that Illinois' previously approved regulations at 35 IAC part 254 meet the emission statement requirements for the 2008 ozone NAAQS.
Regional haze plan	Statewide	6/24/2011	7/6/2012, 77 FR 39943.	
Regional Haze Progress Report.	Statewide	2/1/2017	4/12/2018, 83 FR 15744.	
Small business stationary source technical and environmental compliance assistance program.	State-wide	11/12/1992	8/30/1993, 58 FR 45451.	
Total Suspended Particulate Control Strategy analysis.	State-wide	10/1/1981	9/30/1982, 47 FR 43054.	
Transportation control plan	Chicago Area	4/17/1973	3/2/1976, 41 FR 8956.	
Transportation control plan	Chicago Area	4/30/1980	1/27/1981, 46 FR 8472.	
Transportation control plan	Chicago Area	8/20/1980 and 3/20/1981	11/16/1981, 46 FR 56196.	
Transportation control plan	Peoria Area	10/15/1980	11/16/1981, 46 FR 56196.	
Transportation control plan	St. Louis Area	4/1/1981	11/16/1981, 46 FR 56196.	
Transportation control plans	Chicago and St. Louis areas.	12/3/1982	10/4/1990, 55 FR 40658.	
Attainment and Maintenance Plans				
Carbon monoxide attainment demonstration.	Chicago Area	5/4/1983	10/4/1990, 55 FR 40658.	
Lead (1978) attainment and maintenance plan.	Granite City area	9/30/1983	7/24/1984, 49 FR 29790.	
Lead (2008)—Clean Data Determination.	Chicago Area	N/A	8/25/2015, 80 FR 51131.	
Lead (2008) Redesignation and maintenance plan.	Chicago and Granite City areas.	9/22/2016	3/28/2018, 83 FR 13198.	
Ozone (1-hour) attainment demonstration.	Chicago area	12/26/2000	11/13/2001, 66 FR 56904.	
Ozone (1-hour) attainment demonstration.	St. Louis area	11/15/1999, 2/10/2000, 4/13/2001, and 4/30/2001	6/26/2001, 66 FR 33996	EPA is disapproving the request for an exemption from the NO_X NSR and certain NO_X conformity requirements for Madison, Monroe, and St. Clair Counties.
Ozone (1-hour) attainment plan revision.	Chicago severe nonattainment area.	4/11/2003	9/15/2003, 68 FR 53887.	
Ozone (1-hour) redesignation and maintenance plan.	Jersey County	11/12/1993	3/14/1995, 60 FR 13634.	
Ozone (1-hour) redesignation and maintenance plan.	St. Louis Area	12/30/2002	5/12/2003, 68 FR 25542.	
Ozone (1-hour revoked) finding of attainment.	Chicago area	1/30/2007	12/30/2008, 73 FR 79652.	
Ozone (8-hour, 1997) Determination of Attainment.	Chicago area	N/A	7/8/2011, 76 FR 40262	Correction to codification published on 3/12/2010 at 75 FR 12088.
Ozone (8-hour, 1997) Determination of Attainment.	St. Louis area	N/A	6/9/2011, 76 FR 33647.	

EPA-APPROVED ILLINOIS NONREGULATORY AND QUASI-REGULATORY PROVISIONS—Continued

Name of SIP provision	Applicable geographic or nonattainment area	State submittal date	EPA approval date	Comments
Ozone (8-hour, 1997) maintenance plan revision.	Chicago area	3/28/2014	10/6/2014, 79 FR 60073 ..	Revised VOC and NO_X Motor Vehicle Emissions Budgets (MVEB) for the year 2025.
Ozone (8-hour, 1997) redesignation and maintenance plan.	Chicago area	7/23/2009, and 9/16/2011	8/13/2012, 77 FR 48062.	
Ozone (8-hour, 1997) redesignation and maintenance plan.	St. Louis area	5/26/2010, and 9/16/2011	6/12/2012, 77 FR 34819.	
Ozone (8-hour, 2008) Determination of Attainment.	St. Louis area	N/A	6/27/2016, 81 FR 41444 ..	determination that the area attained by the 7/20/2016 attainment date.
Ozone (8-hour, 2008) redesignation and maintenance plan.	St. Louis area	5/8/2017	3/1/2018, 83 FR 8756.	
PM_{10} maintenance plan	Granite City area ..	3/19/1996, and 10/15/1996	3/11/1998, 47 FR 11842.	
PM_{10} maintenance plan	Lake Calumet (Southeast Chicago), Cook County.	8/2/2005, as supplemented on 9/8/2005	9/22/2005, 70 FR 55545.	
PM_{10} maintenance plan	LaSalle County	6/2/1995, and 1/9/1996	8/8/1996, 61 FR 41342.	
PM_{10} maintenance plan	Lyons Township (McCook), Cook County.	8/2/2005	9/22/2005, 70 FR 55541.	
$PM_{2.5}$ (1997)—Clean Data Determination.	St. Louis area	N/A	5/23/2011, 76 FR 29652.	
$PM_{2.5}$ (1997)—Determination of Attainment.	Chicago area	N/A	11/27/2009, 74 FR 62243.	
$PM_{2.5}$ (1997)—Determination of Attainment.	St. Louis area	N/A	6/27/2012, 77 FR 38184.	
$PM_{2.5}$ (1997)—maintenance plan and motor vehicle emissions budgets.	Chicago area	10/15/2010, supplemented on 9/16/2011, and 5/6/2013	10/2/2013, 78 FR 60704.	
Sulfur dioxide (2010) nonattainment plans.	Lemont and Pekin	3/2/2016	2/1/2018, 83 FR 4591.	
Sulfur dioxide control strategy	Cincinnati, Pekin and Elm Grove Townships in Tazewell County and Logan and Limestone Townships in Peoria County.	3/24/1983 and 5/3/1983	8/8/1984, 49 FR 31685	Correction to codification published on 2/9/1994 at 59 FR 5955.
Sulfur dioxide maintenance plan.	Peoria and Hollis Townships in Peoria County and Groveland Township in Tazewell County.	11/10/1994	60 FR 17001, 4/4/1995.	
Emission Inventories				
Emission inventory—1990 (1-hour ozone).	Chicago and St. Louis areas.	11/12/1993	3/14/1995, 60 FR 13631.	
Emission inventories—2002 (NO_X, primary $PM_{2.5}$, SO_2, ammonia, and VOC).	Chicago area	10/15/2010, supplemented on 5/6/2013	10/2/2013, 78 FR 60704.	
Emissions inventory—2002 (1997 8-hour ozone).	St. Louis area	5/26/2010, supplemented on 9/16/2011	6/12/2012, 77 FR 34819.	
Emissions inventory—2002 (1997 8-hour ozone).	Chicago area	6/21/2006, supplemented on 9/16/2011	8/13/2012, 77 FR 48062.	
Emission inventory—2011 (2008 8-hour ozone).	Chicago and St. Louis areas.	9/3/2014	3/7/2016, 81 FR 11671.	

EPA-APPROVED ILLINOIS NONREGULATORY AND QUASI-REGULATORY PROVISIONS—Continued

Name of SIP provision	Applicable geographic or nonattainment area	State submittal date	EPA approval date	Comments
Emission inventory—2012 (2008 Lead).	Chicago and Granite City areas.	9/22/2016	3/28/2018, 83 FR 13198.	
Moderate Area & Above Ozone Requirements				
15 percent rate-of-progress and 3 percent contingency plans.	Chicago and St. Louis areas.	11/15/1993	12/18/1997, 62 FR 66279.	
Negative declaration—Natural gas/gasoline processing plants.	State-wide	11/14/1985	11/24/1986, 51 FR 42221.	
Negative declaration—Aerospace manufacturing and rework industry.	Chicago and St. Louis areas.	10/11/1996	2/11/1997, 62 FR 6127.	
Negative declaration—Industrial cleaning solvents category.	St. Louis area	10/2/1998	1/6/1999, 64 FR 756.	
Negative declaration—Industrial cleaning solvents category.	Chicago area	12/23/1999	2/7/2001, 66 FR 9206.	
Negative declaration—Industrial wastewater category.	Chicago area	12/23/1999	4/27/2001, 66 FR 21096.	
Negative declaration—Industrial wastewater category.	St. Louis area	10/2/1998	1/6/1999, 64 FR 756.	
Negative declaration—Shipbuilding and ship repair industry.	Chicago and St. Louis areas.	10/11/1996	2/11/1997, 62 FR 6126.	
NO_X RACT waiver (1997 8-hour ozone).	Chicago and St. Louis areas.	7/29/2010	2/22/2011, 76 FR 9655.	
NO_X waiver—RACT, NSR, vehicle I/M, and general conformity.	Chicago severe nonattainment area.	7/13/1994	1/26/1996, 61 FR 2428	does not cover the exemption of NO_X transportation conformity requirements.
NO_X waiver—transportation conformity requirements.	Chicago severe nonattainment area.	6/20/1995	2/12/1996, 61 FR 5291.	
Photochemical assessment ambient monitoring system (PAMS).	.....	11/4/1993	2/25/1994, 59 FR 9091.	
Post–1996 Rate Of Progress Plan.	Chicago area	12/18/1997, 12/17/1999, 1/14/2000, 1/21/2000, and 2/17/2000	12/18/2000, 65 FR 78961	Includes Contingency measure plan and Transportation Control Measures (TCMs).
Transportation control measures as part of the 15 percent rate-of-progress and 3 percent contingency plans.	St. Louis area	11/15/1993	12/18/1997, 62 FR 66279	Work trip reductions; transit improvements; and traffic flow improvements.
Vehicle miles traveled (VMT) SIP and, transportation control measures (TCMs) as part of the 15 percent rate-of-progress plan.	Chicago area	7/14/1994	9/21/1995, 60 FR 48896.	
Section 110(a)(2) Infrastructure Requirements				
1997 8-hour Ozone NAAQS Infrastructure Requirements.	Statewide	12/12/2007	7/13/2011, 76 FR 41075 ..	CAA elements 110(a)(2)(A), (B), (C) with respect to enforcement, (D)(ii), (E) through (H), (J) except for prevention of significant deterioration (PSD), and (K) through (M) have been approved. CAA elements 110(a)(2)(C) and (J) with respect to PSD have been disapproved.

EPA-APPROVED ILLINOIS NONREGULATORY AND QUASI-REGULATORY PROVISIONS—Continued

Name of SIP provision	Applicable geographic or nonattainment area	State submittal date	EPA approval date	Comments
1997 $PM_{2.5}$ NAAQS Infrastructure Requirements.	Statewide	12/12/2007	7/13/2011, 76 FR 41075 ..	CAA elements 110(a)(2)(A), (B), (C) with respect to enforcement, (D)(ii), (E) through (H), (J) except for prevention of significant deterioration (PSD), and (K) through (M) have been approved. CAA elements 110(a)(2)(C) and (J) with respect to PSD have been disapproved.
2006 24-hour $PM_{2.5}$ NAAQS Infrastructure Requirements.	Statewide	8/9/2011, supplemented on 8/25/2011, and 6/27/2012	8/26/2015, 80 FR 51730 ..	CAA elements 110(a)(2)(A), (B), (C) with respect to enforcement, (D)(i)(II) with respect to visibility protection, (E)(i), (E)(iii), (F) through (H), (J) except for prevention of significant deterioration (PSD), and (K) through (M) have been approved. CAA elements 110(a)(2)(E)(ii), (D)(ii) and the PSD portions of (C), (D)(i)(II), and (J) have been disapproved.
2008 Lead NAAQS Infrastructure Requirements.	Statewide	12/31/2012	7/16/2014, 79 FR 41439 ..	CAA elements 110(a)(2)(A), (B), (C) with respect to enforcement, (D)(i)(I), (D)(i)(II) with respect to visibility protection, (E)(i), (E)(iii), (F) through (H), (J) except for prevention of significant deterioration (PSD), and (K) through (M) have been approved. CAA elements 110(a)(2)(D)(ii) and the PSD portions of (C), (D)(i)(II), and (J) have been disapproved.
2008 Ozone NAAQS Infrastructure Requirements.	Statewide	12/31/2012	8/26/2015, 80 FR 51730 ..	CAA elements 110(a)(2)(A), (B), (C) with respect to enforcement, (D)(i)(II) with respect to visibility protection, (E)(i), (E)(iii), (F) through (H), (J) except for prevention of significant deterioration (PSD), and (K) through (M) have been approved. CAA elements 110(a)(2)(D)(ii), (E)(ii), and the PSD portions of (C), (D)(i)(II), and (J) have been disapproved.

EPA-APPROVED ILLINOIS NONREGULATORY AND QUASI-REGULATORY PROVISIONS—Continued

Name of SIP provision	Applicable geographic or non-attainment area	State submittal date	EPA approval date	Comments
2010 NO_2 NAAQS Infrastructure Requirements.	Statewide	12/31/2012	5/22/2015, 80 FR 29535	CAA elements 110(a)(2)(A), (B), (C) with respect to enforcement, (D)(i)(I), (D)(i)(II) with respect to visibility protection, (E)(i), (E)(iii), (F) through (H), (J) except for prevention of significant deterioration (PSD), and (K) through (M) have been approved. CAA elements 110(a)(2)(D)(ii) and the PSD portions of (C), (D)(i)(II), and (J) have been disapproved.
2010 SO_2 NAAQS Infrastructure Requirements.	Statewide	12/31/2012	5/22/2015, 80 FR 29535	CAA elements 110(a)(2)(A), (B), (C) with respect to enforcement, (D)(i)(II) with respect to visibility protection, (E)(i), (E)(iii), (F) through (H), (J) except for prevention of significant deterioration (PSD), and (K) through (M) have been approved. CAA elements 110(a)(2)(D)(ii) and the PSD portions of (C), (D)(i)(II), and (J) have been disapproved.

[82 FR 30638, June 30, 2017, as amended at 82 FR 31915, July 11, 2017; 82 FR 32774, July 18, 2017; 83 FR 4593, Feb. 1, 2018; 83 FR 8615, Feb. 28, 2018; 83 FR 8757, Mar. 1, 2018; 83 FR 13201, Mar. 28, 2018; 83 FR 15746, Apr. 12, 2018; 83 FR 24407, May 29, 2018; 83 FR 24032, May 24, 2018]

§ 52.721 Classification of regions.

The Illinois plan was evaluated on the basis of the following classifications:

Air quality control region	Pollutant				
	Particulate matter	Sulfur oxides	Nitrogen dioxide	Carbon monoxide	Ozone
Burlington-Keokuk Interstate	I	I	III	III	III
East Central Illinois Intrastate	III	II	III	III	III
Metropolitan Chicago Interstate (Indiana-Illinois)	I	I	I	I	I
Metropolitan Dubuque Interstate	I	III	III	III	III
Metropolitan Quad Cities Interstate	I	III	III	III	III
Metropolitan St. Louis Interstate (Missouri-Illinois)	I	I	III	I	I
North Central Illinois Intrastate	II	IA	III	III	III
Paducah (Kentucky)-Cairo (Illinois) Interstate	I	II	III	III	III
Rockford (Illinois)-Janesville-Beloit (Wisconsin) Interstate	II	III	III	III	III
Southeast Illinois Intrastate	III	II	III	III	III
West Central Illinois Intrastate	I	IA	III	III	III

[37 FR 10862, May 31, 1972, as amended at 39 FR 16346, May 8, 1974; 45 FR 11493, Feb. 21, 1980]

§ 52.722 Approval status.

(a) With the exceptions set forth in this subpart, the Administrator approved Illinois' plan for the attainment and maintenance of the National Ambient Air Quality Standards under section 110 of the Clean Air Act. Furthermore, the Administrator finds the plan satisfies all requirements of part D, title I of the Clean Air Act as amended

in 1977, except as noted below. In addition, continued satisfaction of the requirements of part D for the ozone portion of the SIP depends on the adoption and submittal of RACT requirements by July 1, 1980, for the sources covered by CTGs between January 1978 and January 1979 and adoption and submittal by each subsequent January of additional RACT requirements for sources covered by CTGs issued by the previous January.

(b) The Administrator finds that the transportation control plans for the East St. Louis and Chicago areas submitted on December 3, 1982, satisfy the related requirements of part D, title I of the Clean Air Act, as amended in 1977.

(c) The Administrator finds that the carbon monoxide control strategy submitted on May 4, 1983, satisfies all requirements of part D, title I of the Clean Air Act, as amended in 1977, except for section 172(b)(6).

[55 FR 40661, Oct. 4, 1990]

§ 52.723 [Reserved]

§ 52.724 Control strategy: Sulfur dioxide.

(a) Part D—Conditional Approval—The Illinois plan is approved provided that the following condition is satisfied:

(1) The plan includes a reanalysis of the Pekin, Illinois area, a submittal of the analysis results to USEPA, the proposal of any additional regulations to the Illinois Pollution Control Board necessary to insure attainment and maintenance of the sulfur dioxide standard, and the promulgation of any necessary regulations. The State must complete the reanalysis, submit the results to USEPA and submit any necessary, additional regulations to the Illinois Pollution Control Board by September 30, 1980. Any necessary regulation must be finally promulgated by the State and submitted to USEPA by September 30, 1981.

(2) Extension of Condition—USEPA approves the date of July 1, 1984 for submitting the draft sulfur dioxide rule revisions and supporting documentation as required in (a)(1) for Peoria, Hollis and Groveland Townships in Illinois. The State must complete final rule adoption as expeditiously as possible but no later than December 31, 1985.

(b) Part D—Disapproval—USEPA disapproves Rules 204(c)(1)(B), Rule 204(c)(1)(C), Rule 204(e)(1) and Rule 204(e)(2) for those sources for which these rules represent a relaxation of the federally enforceable State Implementation Plan. Rule 204(c)(1)(B), Rule 204(c)(1)(C), Rule 204(e)(1) and Rule 204(e)(2) are approved as not representing relaxations of the State Implementation Plan for the following sources:

SOURCES OF 10 MILLION BTU PER HOUR OR MORE NOT INCREASING ALLOWABLE SULFUR DIOXIDE EMISSIONS AS A RESULT OF RECORD RULES 204(c) AND 204(e) BECAUSE NEW ALLOWABLE EMISSIONS RATE IS SAME AS OR LESS THAN OLD ALLOWABLE RATE POUNDS PER HOUR (POUNDS PER MILLION BTU)

County	Name	Emissions formerly allowable [1]	Emissions now allowable without new permit application [2]
Boone	Chrysler	1,760 (4.4)	1,760 (4.4)
Champaign	Chanute Air Base	1,317 (3.0)	1,317 (3.0)
Crawford	CIPS	8,242 (5.1)	8,242 (5.1)
Douglas	USI Chemicals	8,022 (5.3)	8,022 (5.3)
Fulton	Freeman Coal	22.2 (1.2)	22.2 (1.2)
La Salle	Del Monte	296 (3.9)	296 (3.9)
Massac	EEI Joppa	36,865 (3.6)	36,865 (3.6)
Montgomery	CIPS	55,555 (5.8)	55,555 (5.8)
Morgan	.....do	24,000 (6.0)	20,800 (5.2)
Putnam	Illinois Power	17,051 (5.8)	17,051 (5.8)
Randolph	.....do [3]	81,339 (4.6)	81,339 (4.6)
Rock Island	International Harvester	1,643 (4.35)	1,643 (4.35)
Williamson	Marion Correctional	396 (5.7)	396 (5.7)

[1] 6.0 lbs/MMBTU of existing coal fired capacity or total 204(e)(2) emissions less actual oil fired and NSPS emissions, whichever is lower.

[2] Maximum allowable emissions for existing coal fired capacity according to revised rules 204(c) and 204(e) consolidated, usually equally equalling total emissions as given by 204(e)(2) less actual oil fired NSPS emissions. (In the one case wherein the new allowable limit is less than that given by 204(e)(2) the allowable emissions were determined by 204(e)(1) with which the source is required to comply.)

[3] Source is in compliance per 204(e)(3).

CIPS = Central Illinois Public Service.
EEI = Electric Energy Incorporated.

This disapproval does not in and of itself result in the growth restrictions of section 110(a)(2)(1).

(c) Disapproval—USEPA disapproves Rule 204(e)(4) as not being adequate to protect the NAAQS. This disapproval does not in and of itself result in the growth restrictions of section 110(a)(2)(I).

(d) Disapproval—USEPA disapproves Rule 204(f)(1)(D) as completely deregulating SO_2 emissions from existing processes without providing an assessment of the ambient air quality impact or a showing that increasing the allowable emissions from these sources will not cause or contribute to violations of the NAAQS or PSD increments. This disapproval does not in and of itself result in the growth restrictions of section 110(a)(2)(I).

(e) Disapproval—USEPA disapproves Rule 204(h) for those sources for which USEPA has disapproved rules 204(c) and 204(e). This disapproval does not in and of itself result in the growth restrictions of section 110(a)(2)(I).

(f) Approval—USEPA approves rule 204(e)(3) for those sources able to show that the proposed emission rate will not cause or contribute to a violation of the NAAQS. The State must submit these emission limitations, along with the technical support to USEPA for approval.

(g) Part D—Approval—The State plan for Alton Township, Madison County, which consists of a federally Enforceable State Operating Permit controlling sulfur dioxide emissions from the boilers and reheat furnaces at Laclede Steel, which was submitted on November 18, 1993, is approved.

(h) Approval—On November 10, 1994, the Illinois Environmental Protection Agency submitted a sulfur dioxide redesignation request and maintenance plan for Peoria and Hollis Townships in Peoria County and Groveland Township in Tazewell County to redesignate the townships to attainment for sulfur dioxide. The redesignation request and maintenance plan meet the redesignation requirements in section 107(d)(3)(d) of the Clean Air Act (Act) as amended in 1990.

[45 FR 62806, 62809, Sept. 22, 1980, as amended at 50 FR 5250, Feb. 7, 1985; 59 FR 18753, Apr. 20, 1994; 60 FR 17001, Apr. 4, 1995]

§ 52.725 Control strategy: Particulates.

(a) [Reserved]

(b) Part D—Disapproval. (1) U.S. EPA disapproves the provisions of Rule 203(f) which allow the use of an equivalent method without review and approval of that method. Any source subject to Rule 203(f) which chooses to use an equivalent method must have that equivalent method submitted to U.S. EPA and approved as a SIP revision.

(2) U.S. EPA disapproves the following portions of Rule 203(d)(5) which regulate the control of particulate matter from specific sources within the iron and steel industry: Rule 205(d)(5)(B)(ii), Rule 205(d)(5)(B)(iii), Rule 205(d)(5)(D), and Rule 205(d)(5)(K).

(3) USEPA disapproves a proposed SIP revision submitted by the State on May 12, 1982, in the form of a May 18, 1981 Consent Decree (Civil Action 81–3009) to which USEPA, Illinois Environmental Protection Agency and National Steel Corporation are parties and a draft Alternative Control Strategy Permit. This submission was modified by the State, September 30, 1982, with the submission of a separate document embodying the elements of the Alternative Control Strategy. This separate document was intended to become an enforceable part of the SIP.

(c) Approval—On September 28, 1988, the State of Illinois submitted a committal SIP for particulate matter with an aerodynamic diameter equal to or less than 10 micrometers (PM_{10}) for the Illinois Group II areas of concern in DuPage, Will, Rock Island, Macon, Randolph, and St. Clair Counties. The committal SIP contains all the requirements identified in the July 1,

1987, promulgation of the SIP requirements for PM_{10} at 52 FR 24681.

(d) Approval—On June 2, 1995, and January 9, 1996, the State of Illinois submitted a maintenance plan for the particulate matter nonattainment portion of LaSalle County, and requested that it be redesignated to attainment of the National Ambient Air Quality Standard for particulate matter. The redesignation request and maintenance plan satisfy all applicable requirements of the Clean Air Act.

(e) Approval—On March 19, 1996, and October 15, 1996, Illinois submitted requests to redesignate the Granite City Particulate Matter (PM) nonattainment area to attainment status for the PM National Ambient Air Quality Standards (NAAQS), as well as a maintenance plan for the Granite City area to ensure continued attainment of the NAAQS. The redesignation request and maintenance plan satisfy all applicable requirements of the Clean Air Act.

(f) On November 14, 1995, May 9, 1996, and June 14, 1996, the State of Illinois submitted State Implementation Plan (SIP) revision requests to meet commitments related to the conditional approval of Illinois' May 15, 1992, SIP submittal for the Lake Calumet (SE Chicago), McCook, and Granite City, Illinois, Particulate Matter (PM) nonattainment areas. The EPA is approving the SIP revision request as it applies to the McCook PM nonattainment area. For the McCook PM nonattainment area, all of the deficiencies of the May 15, 1992, submittal have been corrected.

(g) Approval—On May 5, 1992, November 14, 1995, May 9, 1996, June 14, 1996, February 3, 1997, October 16, 1997, October 21, 1997, February 1, 1999, and May 19, 1999, Illinois submitted SIP revision requests to meet the Part D particulate matter (PM) nonattainment plan requirements for the Lake Calumet, Granite City and McCook moderate PM nonattainment areas. The submittals include federally enforceable construction permit, application number 93040047, issued on January 11, 1999, to Acme Steel Company. The part D plans for these areas are approved.

(h) Approval—On August 2, 2005, the State of Illinois submitted a request to redesignate the Lyons Township (McCook), Cook County particulate matter nonattainment area to attainment of the NAAQS for particulate matter with an aerodynamic diameter less than or equal to a nominal 10 micrometers (PM–10). In its submittal, the State also requested that EPA approve the maintenance plan for the area into the Illinois PM SIP. The redesignation request and maintenance plan meet the redesignation requirements of the Clean Air Act.

(i) Approval—On August 2, 2005, and as supplemented on September 8, 2005, the State of Illinois submitted a request to redesignate the Lake Calumet (Southeast Chicago), Cook County particulate matter nonattainment area to attainment of the NAAQS for particulate matter with an aerodynamic diameter less than or equal to a nominal 10 micrometers (PM–10). In its submittal, the State also requested that EPA approve the maintenance plan for the area into the Illinois PM SIP. The redesignation request and maintenance plan meet the redesignation requirements of the Clean Air Act.

(j) *Determination of Attainment*. EPA has determined, as of November 27, 2009, that the Chicago-Gary-Lake County, IL-IN $PM_{2.5}$ nonattainment area has attained the 1997 $PM_{2.5}$ NAAQS. This determination, in accordance with 40 CFR 51.1004(c), suspends the requirements for this area to submit an attainment demonstration, associated reasonably available control measures, reasonable further progress, contingency measures, and other plan elements related to attainment of the standard for as long as this area continues to meet the 1997 $PM_{2.5}$ NAAQS.

(k) Determination of attainment. EPA has determined, as of May 23, 2011, that the St. Louis (MO-IL) metropolitan 1997 $PM_{2.5}$ nonattainment area has attained the 1997 $PM_{2.5}$ NAAQS. This determination, in accordance with 40 CFR 51.1004(c), suspends the requirements for this area to submit an attainment demonstration, associated reasonably available control measures, reasonable further progress, contingency measures, and other plan elements related to attainment of the standards for as long as the area continues to meet the 1997 $PM_{2.5}$ NAAQS. In addition, based upon review of the

air quality data for the 3-year period 2007 to 2009, EPA has determined that the St. Louis (MO-IL) $PM_{2.5}$ nonattainment area has attained the 1997 $PM_{2.5}$ NAAQS by the applicable attainment date of April 5, 2010.

(l) Approval—The 1997 annual $PM_{2.5}$ maintenance plan for the Illinois portion of the Chicago-Gary-Lake County, IL–IN nonattainment area (including Cook, DuPage, Kane, Lake, McHenry and Will Counties, Aux Sable and Goose Lake Townships in Grundy County, and Oswego Township in Kendall County) has been approved as submitted on October 15, 2010, and supplemented on September 16, 2011, and May 6, 2013. The maintenance plan establishes 2008 and 2025 motor vehicle emissions budgets for this area of 127,951 tons per year for NO_X and 5,100 tons per year for primary $PM_{2.5}$ in 2008 and 44,224 tons per year for NO_X and 2,377 tons per year for primary $PM_{2.5}$ in 2025.

(m) Illinois' 2002 NO_X, primary $PM_{2.5}$, SO_2, ammonia, and VOC emission inventories, as submitted on October 15, 2010, and supplemented on May 6, 2013, satisfy the emission inventory requirements of section 172(c)(3) of the Clean Air Act for the Chicago area.

[45 FR 11493, Feb. 21, 1980, as amended at 46 FR 44185, Sept. 3, 1981; 47 FR 26620, June 21, 1982; 48 FR 45246, Oct. 4, 1983; 49 FR 1905, Jan. 16, 1984; 55 FR 20266, May 16, 1990; 61 FR 41345, Aug. 8, 1996; 63 FR 11846, Mar. 11, 1998; 63 FR 47434, Sept. 8, 1998; 64 FR 37851, July 14, 1999; 70 FR 55545, 55549, Sept. 22, 2005; 74 FR 62249, Nov. 27, 2009; 76 FR 29656, May 23, 2011; 77 FR 38184, June 27, 2012; 78 FR 60706, Oct. 2, 2013]

§ 52.726 Control strategy: Ozone.

(a) Part D—Conditional Approval—The Illinois plan is approved provided that the following conditions are satisfied:

(1) [Reserved]

(2) The State conducts a study to demonstrate that the 75 percent overall control efficiency requirement in Rule 205(n) represents RACT, submits the results of the study to USEPA, and submits any necessary regulations representing RACT to the Illinois Pollution Control Board. The State must comply with these conditions by February 28, 1981. Any necessary regulations must be finally promulgated by the State and submitted to USEPA by February 28, 1982.

(3) Extension of Condition—USEPA approves the date of July 31, 1984 for the State of Illinois to satisfy the condition of approval to the ozone State Implementation Plan listed in paragraph (a)(2) of this section.

(b) Disapproval—USEPA disapproves the compliance schedule in Rule 205(j) as it applies to loading rack controls for all emission sources subject to Rule 205(b)(1), as approved by USEPA on May 31, 1972 which were required to be in compliance by December 31, 1973. This disapproval does not in and of itself result in the growth restrictions of section 110(a)(2)(I).

(c) *Negative Declarations—Stationary Source Categories*. The State of Illinois has certified to the satisfaction of USEPA that no sources are located in the nonattainment areas of the State which are covered by the following Control Technique Guidelines:

(1) High density polyethylene and polypropylene manufacturers.

(2) Vegetable oil processing sources with volatile organic compound emissions equal to or greater than 100 tons per year.

(d) Part D Disapproval—The Administrator finds that Illinois' ozone plan for Cook, Lake, DuPage and Kane Counties, which was required to be submitted by July 1, 1982, does not satisfy all the requirements of Part D, Title I of the Clean Air Act and, thus, is disapproved. No major new stationary source, of major modification of a stationary source, or volatile organic compounds may be constructed in Cook, Lake, DuPage or Kane Counties, unless the construction permit application is complete on or before November 16, 1988. This disapproval does not affect USEPA's approval (or conditional approval) of individual parts of Illinois' ozone plan, and they remain approved.

(e) Disapproval—The Administrator finds that the following State rules have not been demonstrated to be consistent with the reasonably available control technology requirements of section 172 of the Clean Air Act, as amended in 1977, and thus, are disapproved: subpart F, section 215.204(c); subpart F, section 215.206(b); subpart F, section 215.204(j)(4); subpart I; subpart AA; subpart PP; subpart QQ; subpart RR; subpart A, section 215.102; subpart

T; subpart H, section 215.245; subpart F, section 215.207; and subpart A, section 215.107, all of title 35; Environmental Protection; subtitle B: Air Pollution; Chapter 1: Pollution Control Board of the Illinois Administrative Code (June 1989).

(f) On September 30, 1992, the State submitted rules regulating volatile organic compound emissions from gasoline dispensing facilities' motor vehicle fuel operations (Stage II vapor recovery rules) in the Chicago ozone nonattainment area. The Illinois Environmental Protection Agency Bureau of Air must as part of the program conduct inspections of facilities subject to this rule to ensure compliance with the applicable rules. These inspections will be conducted on an annual basis or an alternative schedule as approved in the USEPA Fiscal Year Inspection Program Plan.

(g) Approval—The Administrator approves the incorporation of the photochemical assessment ambient monitoring system submitted by Illinois on November 4, 1993, into the Illinois State Implementation Plan. This submittal satisfies 40 CFR 58.20(f) which requires the State to provide for the establishment and maintenance of photochemical assessment monitoring stations (PAMS) by November 12, 1993.

(h) Approval—On November 12, 1993, the Illinois Environmental Protection Agency submitted an ozone redesignation request and maintenance plan for Jersey County ozone nonattainment area and requested that Jersey County be redesignated to attainment for ozone. The redesignation request and maintenance plan meet the redesignation requirements in section 107(d)(3)(d) of the Act. The redesignation meets the Federal requirements of section 182(a)(1) of the Clean Air Act as a revision to the Illinois ozone State Implementation Plan for Jersey County.

(i) The base year (1990) ozone emission inventory requirement of section 182(a)(1) of the Clean Air Act, as amended in 1990, has been satisfied for the following Illinois ozone nonattainment areas: the Chicago nonattainment area—Cook, DuPage, Kane, Lake, Will and McHenry Counties, Aux Sable and Gooselake Townships in Grundy County, and Oswego Township in Kendall County; the Metro-East St. Louis nonattainment area—Madison, Monroe, and St. Clair Counties; and Jersey County.

(j) Approval—On July 14, 1994, Illinois submitted two of three elements required by section 182(d)(1)(A) of the Clean Air Amendments of 1990 to be incorporated as part of the vehicle miles traveled (VMT) State Implementation Plan intended to offset any growth in emissions from a growth in vehicle miles traveled. These elements are the offsetting of growth in emissions attributable to growth in VMT which was due November 15, 1992, and, transportation control measures (TCMs) required as part of Illinois' 15 percent reasonable further progress (RFP) plan which was due November 15, 1993. Illinois satisfied the first requirement by projecting emissions from mobile sources and demonstrating that no increase in emissions would take place. Illinois satisfied the second requirement by submitting the TCMs listed in Table 1 which are now approved into the Illinois SIP.

TABLE 1

Project type	Location description	Completion status	SIP credit VOC tpd
RS/SIG MOD	Madison Street (Western Ave. to Halsted Street)	Done	0.015400
SIG COORD	Willow Road (Landwer Road to Shermer)	Awarded	0.052000
SIG COORD	Rand Road (Baldwin Road to Kennicott)	Awarded	0.052000
SIG COORD	Northwest Hwy (Potter Road to Cumberland Avenue)	Awarded	0.030000
SIGS/SIG COORD	159th Street (US 45 to 76th Ave & at 91st Avenue)	Awarded	0.030000
SIG COORD	Harlem Ave. (71st St. to 92nd)	Awarded	0.052000
SIG COORD	Harlem Ave. (99th Street to 135th St.)	Awarded	0.052000
RECONST/SIGS/LTS	Archer Ave. (88th Ave to 65th St.)	Awarded	0.030000
SIG COORD	Ogden Ave. (N. Aurora Road to Naper Boulevard)	Awarded	0.030000
SIG COORD	North Ave. (Tyler to Kautz)	Awarded	0.030000
SIG COORD	Higgens Road (Il 72 at Il 31)	Awarded	0.030000
SIG COORD	Sheridan Road (Il 173 to Wadsworth)	Awarded	0.030000
SIG COORD	Lagrange Road (Belmont to Lake St.)	Awarded	0.030000

TABLE 1—Continued

Project type	Location description	Completion status	SIP credit VOC tpd
SIG COORD	Dundee Road (Sanders Road to Skokie Valley Road)	Awarded	0.052000
SIG COORD	Dundee Road (Buffalo Grove Road to Il 21)	Awarded	0.030000
INT IMP/SIG COORD	Golf Road (E. River Road to Washington Ave.)	Awarded	0.052000
SIG COORD	Golf Road (Barrington to Roselle Road)	Awarded	0.030000
SIG COORD	Higgins Road (Barrington to Roselle Road)	Awarded	0.030000
SIG COORD	Joe Orr Road (Vincennes Ave. to Il 1)	Awarded	0.030000

TABLE 1

Project type	Location description	Completion status	SIP credit
SIG COORD/RS	Crawford Ave. (93rd Street to 127th Street)	Awarded	0.052000
SIG COORD	IL 53 (Briarcliff to South of I–55)	Done	0.030000
SIG COORD	Ogden Ave. (Oakwood Avenue to Fairview Avenue)	Awarded	0.019000
SIG COORD	US 14 (Rohlwing Road to Wilke Road)	Awarded	0.030000
SIG COORD	US 30 (At Cottage Grove, Ellis St)	Awarded	0.030000
SIG COORD	IL 53 (Modonough to Mills)	Done	0.030000
SIG CONN	Ogden Ave. (IL 43 to 31st Street)	Awarded	0.013000
SIG CONN	US 12 (Long Grove—Hicks Road)	Awarded	0.055200
SIG CONN	North Ave. (Oak Park to Ridgeland)	Awarded	0.007000
SIG CONN	Roosevelt Road (Westchester Bl—IL 43)	Awarded	0.137000
SIG CONN	Depster St (Keeler to Crawford Ave.)	Awarded	0.010000
SIG CONN	Arlington Hgts Rd. (Thomas to Central)	Awarded	0.044000
SIG CONN	Palatine Rd. (Shoenbeck to Wolf Roads)	Awarded	0.042500
SIG CONN	Western Ave. (US 30—Lakewood)	Awarded	0.018900
RS/INT IMP	North Ave. (I–290 to IL 43)	Awarded	0.056100
INT IMP	Plum Grove Rd. (At Higgins Road)	Awarded	0.010700
INT IMP	St Street (At Illinois)	Awarded	0.002700
RS/SIG MOD/INT IMP	Illinois/Grand (Kingsbury to Lake Shore Drive)	Done	0.004200
ADD TURN LANES	York Rd. (Industrial to Grand Ave.)	Done	0.003800
SERVICE IMP	SW Route Lane Service	Scheduled	0.005516
SIG INTCONN	Washington Street	Scheduled	0.030370
SIG INTCONN	IL 59	Scheduled	0.068650
ENGR	Citywide—Naperville		0.086230
SIG INTCONN	Washington Street	Scheduled	0.008230
SIG INTCONN	Lewis Ave. (Yorkhousse to ILL 173)	Scheduled	0.034600
SIG INTCONN	Schaumberg Rd. (Barrington to Martingale)	Scheduled	0.078080
Vanpool Program (94 vehicles)	Region-Wide Suburban	Done	0.134000
Transp. Center	North West Cook County	Done	0.032835
Transp. Center	Sears T.F.	Done	0.005805
Station	Clark/Lake	Done	0.010000
Station Recon	18Th Douglas Line	Done	0.001500
Station Recon	Linden	Done	0.001500
Station Recon	Cottage Grove	Done	0.001300
Com. Pkg	Lisle	Done	0.010177
Com. Pkg	Jefferson Park	Done	0.000110
Com. Pkg	Edison Park	Done	0.003614
Com. Pkg	Palatine	Done	0.004336
Com. Pkg	Central Street	Done	0.000519
Com. Pkg	Palatine	Done	0.004890
Com. Pkg	Crystal Lake	Done	0.034948
Com. Pkg	137Th/Riverdale	Done	0.004565
Com. Pkg	River Forest	Done	0.000289
Com. Pkg	115Th/Kensington	Done	0.002795
Com. Pkg	119Th St	Done	0.004483
Com. Pkg	Wilmette	Done	0.001587
Com. Pkg	111Th St	Done	0.000507
Com. Pkg	Edison Park	Done	0.002371
Com. Pkg	Joliet	Done	0.003967
Com. Pkg	Hanover Park	Done	0.021799
Com. Pkg	Bartlett	Done	0.008911
Com. Pkg	Chicago Ridge	Done	0.002159
Com. Pkg	103 Rd St	Done	0.000675
Com. Pkg	Elmhurst	Done	0.003857
Com. Pkg	Bartlett	Done	0.009326
Com. Pkg	Morton Grove	Done	0.001444
Com. Pkg	Palatine	Done	0.003598
Com. Pkg	Harvard	Done	0.006299
Com. Pkg	Willow Springs	Done	0.001200
Com. Pkg	Edgebrook	Done	0.002240

TABLE 1—Continued

Project type	Location description	Completion status	SIP credit
Com. Pkg	Bensenville	Done	0.002010
Com. Pkg	Hanover Park	Done	0.015020
Com. Pkg	Midlothian	Done	0.002570
Com. Pkg	Route 59	Done	0.025020
Com. Pkg	Lake Forest (West)	Done	0.013780
Com. Pkg	Lombard	Done	
Com. Pkg	Elmhurst	Done	0.001010
Com. Pkg	Woodstock	Done	0.019000
Com. Pkg	University Park	Done	0.019950
Com. Pkg	Grayslake	Done	0.006210
Com. Pkg	Oak Forest	Done	0.004260
Com. Pkg	91 St St.	Done	0.003380
Com. Pkg	Lockport	Done	0.007360
Com. Pkg	Ravenswood	Done	0.000130
Com. Pkg	Hickory Creek	Done	0.060140
Com. Pkg	Cary	Done	0.005980
Com. Pkg	Blue Island	Done	0.019430
Com. Pkg	Lemont	Done	0.016200
Com. Pkg	Itasca	Done	0.003860
Com. Pkg	Maywood	Done	0.000600
Com. Pkg	Ivanhoe	Done	0.001960
Com. Pkg	Ravinia	Done	0.003210
Com. Pkg	Fox River Grove	Done	0.025170
Com. Pkg	Medinah	Done	0.012250
Com. Pkg	Hanover Park	Done	0.011840
Com. Pkg	Worth	Done	0.003530
Com. Pkg	Roselle	Done	0.007710
Com. Pkg	Crystal Lake	Done	0.015050
Com. Pkg	Gresham	Done	0.000300
Com. Pkg	Barrington	Done	0.002420
Rideshare Prog.	Regionwide	Scheduled	0.040000
Rapid Transit Service	Midway Airport	Done	0.220000
Transp. Center	Deerfield Lake-Cook	Done	0.004160
Station Recon	Davis St.	Done	0.004000
Station Recon	Addison	Done	0.004000
Station Recon	King Drive	Done	0.003000
Station Recon	Washington/Wells	Done	0.003000
Com. Pkg	Cary	Done	0.027910
Com. Pkg	Morton Grove	Done	0.002460
Com. Pkg	80th Ave.	Scheduled	0.043200
Com. Pkg	Round Lake	Done	0.015150
Com. Pkg	Grayslake	Done	0.009170
Com. Pkg	Ingleside	Scheduled	0.005430
Com. Pkg	Schamburg	Scheduled	0.042090
Com. Pkg	Oak Forest	Scheduled	0.004680
Com. Pkg	Lake Cook	Scheduled	0.026390
Com. Pkg	Grayslake	Scheduled	0.035290

(k) Approval—EPA is approving the section 182(f) oxides of nitrogen (NO_X) reasonably available control technology (RACT), new source review (NSR), vehicle inspection/maintenance (I/M), and general conformity exemptions for the Illinois portion of the Chicago-Gary-Lake County severe ozone nonattainment area as requested by the States of Illinois, Indiana, Michigan, and Wisconsin in a July 13, 1994 submittal. This approval does not cover the exemption of NO_X transportation conformity requirements of section 176(c) for this area. Approval of these exemptions is contingent on the results of the final ozone attainment demonstration expected to be submitted in mid-1997. The approval will be modified if the final attainment demonstration demonstrates that NO_X emission controls are needed in the nonattainment area to attain the ozone standard in the Lake Michigan Ozone Study modeling domain.

(l) Approval—The United States Environmental Protection Agency is approving under section 182(b)(1) of the Clean Air Act the exemption of the Chicago severe, ozone nonattainment area from the build/no-build and less

than-1990 interim transportation conformity oxides of nitrogen requirements as requested by the State of Illinois in a June 20, 1995 submittal. In light of the modeling completed thus far and considering the importance of the OTAG process and attainment plan modeling efforts, USEPA grants this NO_X waiver on a contingent basis. As the OTAG modeling results and control recommendations are completed in 1996, this information will be incorporated into attainment plans being developed by the LADCO States. When these attainment plans are submitted to USEPA in mid-1997, these new modeling analyses will be reviewed to determine if the NO_X waiver should be continued, altered, or removed. USEPA's rulemaking action to reconsider the initial NO_X waiver may occur simultaneously with rulemaking action on the attainment plans. The USEPA also reserves the right to require NO_X emission controls for transportation sources under section 110(a)(2)(D) of the Act if future ozone modeling demonstrates that such controls are needed to achieve the ozone standard in downwind areas. The Chicago severe ozone nonattainment area includes the Counties of Cook, DuPage, Grundy (Aux Sable and Gooselake Townships), Kane, Kendall (Oswego Township), Lake, McHenry, and Will.

(m) [Reserved]

(n) Negative declaration—Shipbuilding and ship repair industry. On October 11, 1996, the State of Illinois certified to the satisfaction of the United States Environmental Protection Agency that no major sources categorized as part of the shipbuilding and ship repair industry are located in the Chicago, Illinois ozone nonattainment area which is comprised of Cook, DuPage, Kane, Lake, McHenry, Will Counties and Aux Sable and Goose Lake Townships in Grundy County and Oswego Township in Kendall County or the Metro-East, Illinois ozone nonattainment area which is comprised of Madison, Monroe, and St. Clair Counties.

(o) Negative declaration—Aerospace manufacturing and rework industry. On October 11, 1996, the State of Illinois certified to the satisfaction of the United States Environmental Protection Agency that no major sources categorized as part of the Aerospace Manufacturing and Rework Industry are located in the Chicago, Illinois ozone nonattainment area which is comprised of Cook, DuPage, Kane, Lake, McHenry, Will Counties and Aux Sable and Goose Lake Townships in Grundy County and Oswego Township in Kendall County or the Metro-East, Illinois ozone nonattainment area which is comprised of Madison, Monroe, and St. Clair Counties.

(p) Approval—On November 15, 1993, Illinois submitted 15 percent rate-of-progress and 3 percent contingency plans for the Chicago ozone nonattainment area as a requested revision to the Illinois State Implementation Plan. These plans satisfy sections 182(b)(1), 172(c)(9), and 182(c)(9) of the Clean Air Act, as amended in 1990.

(q) Approval—On November 15, 1993, Illinois submitted 15 percent rate-of-progress and 3 percent contingency plans for the Metro-East St. Louis ozone nonattainment area as a requested revision to the Illinois State Implementation Plan. These plans satisfy sections 182(b)(1) and 172(c)(9) of the Clean Air Act, as amended in 1990.

(r) Approval—On November 15, 1993, Illinois submitted the following transportation control measures as part of the 15 percent rate-of-progress and 3 percent contingency plans for the Metro-East ozone nonattainment area: Work trip reductions; transit improvements; and traffic flow improvements.

(s) On October 10, 1997, Illinois submitted a site-specific revision to the State Implementation Plan, in the form of a letter from Bharat Mathur, Chief, Bureau of Air, Illinois Environmental Protection Agency. This October 10, 1997, letter requests a change in regulatory status for Riverside Laboratories, Inc.'s Kane County facility, to reflect that the Federal site-specific rule for Riverside (40 CFR 52.741(e)(10)) has been superseded by the State of Illinois regulations, including the emission limits in 35 Illinois Administrative Code 218.204(c) and the associated control requirements, test methods and recordkeeping requirements in Part 218 and the associated definitions in part

211. These State regulations shall become the federally approved regulations applicable to Riverside on August 31, 1998. The site-specific rule, applicable to Riverside, promulgated by the Environmental Protection Agency on August 21, 1995 (40 CFR 52.741(e)(10)), remains in effect and is enforceable after August 31, 1998 for the period before August 31, 1998.

(t) The Illinois volatile organic compound (VOC) rules that apply to the Stepan Company Millsdale Plant for volatile organic liquid storage (35 Ill. Admin. Code Part 218, Subpart B), batch processing (35 Ill. Admin. Code Parts 218 and 219, Subpart V) and continuous reactor and distillation processes (35 Ill. Admin. Code Part 218, Subpart Q) were approved by the United States Environmental Protection Agency (USEPA) on August 8, 1996, April 2, 1996, and June 17, 1997, respectively. Because these rules have been approved into the State Implementation Plan and represent reasonably available control technology for VOC, USEPA revokes the June 29, 1990 Federal Implementation Plan as it applies to Stepan and replaces it with Illinois' volatile organic liquid storage, batch process, and continuous reactor and distillation process rules.

(u) Negative declaration—Industrial wastewater category. On October 2, 1998, the State of Illinois certified to the satisfaction of the United States Environmental Protection Agency that no major sources categorized as part of the Industrial wastewater category are located in the Metro-East ozone nonattainment area (Metro-East). The Metro-East area is comprised of Madison, Monroe and St. Clair Counties which are located in southwest Illinois, adjacent to St. Louis, Missouri.

(v) Negative declaration—Industrial cleaning solvents category. On October 2, 1998, the State of Illinois certified to the satisfaction of the United States Environmental Protection Agency that no major sources categorized as part of the Industrial cleaning solvents category are located in the Metro-East ozone nonattainment area (Metro-East). The Metro-East area is comprised of Madison, Monroe and St. Clair Counties which are located in southwest Illinois, adjacent to St. Louis, Missouri.

(w) *Approval*—On December 18, 1997, December 17, 1999, January 14, 2000, and January 21, 2000, Illinois submitted a post-1996 Rate Of Progress Plan for the Chicago ozone nonattainment area as a requested revision to the Illinois State Implementation Plan. This plan reduces ozone precursor emissions by 9 percent from 1990 baseline emissions by November 15, 1999. This plan also supports a mobile source emissions budget of 279.3 tons/day of volatile organic compounds for transportation conformity purposes.

(x) *Approval*—On December 18, 1997, Illinois submitted a contingency measure plan as part of the Chicago Area post-1996 Rate of Progress Plan. This plan reduces volatile organic compound emissions in the Chicago ozone nonattainment area by 3 percent from 1990 baseline emissions by November 15, 1999.

(y) *Approval*—On December 18, 1997, Illinois submitted Transportation Control Measures (TCMs) as part of the post-1996 Rate Of Progress Plan for the Chicago ozone nonattainment area. The TCMs being approved are listed in the following documents published by the Chicago Area Transportation Study: ''Transportation Control Measures Contribution to the Post-1996 Rate-Of-Progress State Implementation Plan,'' March 22, 1996; ''Transportation Control Measures Contribution to the 9 percent Control Strategy State Implementation Plan,'' June 11, 1998; and ''1999 Transportation Control Measures Contribution to the 9 percent Rate of Progress Control Strategy State Implementation Plan,'' December 9, 1999.

(z) Negative declaration—Industrial cleaning solvents category. On December 23, 1999, the State of Illinois certified to the satisfaction of the United States Environmental Protection Agency that no major sources categorized as part of the industrial cleaning solvents category are located in the Chicago ozone nonattainment area. The Chicago ozone nonattainment area includes Cook County, DuPage County, Aux Sable and Goose Lake Townships in Grundy County, Kane County, Oswego Township in Kendall County,

Lake County, McHenry County and Will County.

(aa) Negative declaration—Industrial wastewater category. On December 23, 1999, the State of Illinois certified to the satisfaction of the United States Environmental Protection Agency that no major sources categorized as part of the Industrial Wastewater Category are located in the Chicago ozone nonattainment area. The Chicago ozone nonattainment area includes Cook County, DuPage County, Aux Sable and Goose Lake Townships in Grundy County, Kane County, Oswego Township in Kendall County, Lake County, McHenry County and Will County.

(bb) Approval—Revisions to the SIP submitted by Illinois on November 15, 1999; February 10, 2000; April 13, 2001; and April 30, 2001. The revisions are for the purpose of satisfying the attainment demonstration requirements of section 182(c)(2)(A) of the Act for the Metro-East St. Louis area. The revision establishes an attainment date of November 15, 2004, for the St. Louis moderate ozone nonattainment area. This revision establishes MVEBs for 2004 of 26.62 TPD of VOC and 35.52 TPD of NO_X to be used in transportation conformity in the Metro-East St. Louis area until revised budgets pursuant to MOBILE6 are submitted and found adequate. In the revision, Illinois commits to revise its VOC and NO_X transportation conformity budgets within two years of the release of MOBILE6. No conformity determinations will be made during the second year following the release of MOBILE6 unless and until the MVEBs have been recalculated using MOBILE6 and found adequate by EPA. EPA is granting a waiver for the Metro East St. Louis area to the state of Illinois from the NO_X RACT requirements of the Act and disapproving the request for a waiver from the NO_X NSR and NO_X general conformity requirements. EPA is finding that the Contingency Measures identified by Illinois are adequate to meet the requirements of the Act. EPA finds that the Illinois SIP meets the requirements pertaining to RACM under the Act for the Metro-East St. Louis area.

(cc) Approval—Illinois has adopted and USEPA has approved sufficient NO_X emission regulations to assure that it will achieve the level of NO_X emissions budgeted for the State by USEPA. USEPA has made two minor budget revisions requested by Illinois, adding a boiler owned by LTV Steel and deleting a boiler owned by the University of Illinois from the inventory of large NO_X sources.

(dd) Chicago Ozone Attainment Demonstration Approval—On December 26, 2000, Illinois submitted a one-hour ozone attainment demonstration plan as a requested revision to the Illinois State Implementation Plan. This plan includes: A modeled demonstration of attainment and associated attainment year conformity emission budgets; a plan to reduce ozone precursor emissions by 3 percent per year from 2000 to 2007 (a post-1999 rate-of-progress plan), and associated conformity emission budgets; a contingency measures plan for both the ozone attainment demonstration and the post-1999 rate-of-progress plan; a commitment to conduct a Mid-Course Review of the ozone attainment demonstration by the end of 2004; a demonstration that Illinois has implemented all reasonably available control measures; and a commitment to revise motor vehicle emission budgets within two years after the U.S. Environmental Protection Agency officially releases the MOBILE6 emission factor model.

(ee) Approval of the Maintenance Plan for the Illinois Portion of the St. Louis Area—On December 30, 2002 Illinois submitted Maintenance Plan for the Illinois portion of the St. Louis Nonattainment Area. The plan includes 2014 On-Road Motor Vehicle Emission Budget of 10.13 tons per ozone season weekday of VOCs and 18.72 tons per ozone season weekday NO_X to be used in transportation conformity.

(ff) Approval—On April 11, 2003, Illinois submitted a revision to the ozone attainment plan for the Chicago severe 1-hour ozone nonattainment area. This plan revised the 2005 and 2007 Motor Vehicle Emissions Budgets (MVEB) recalculated using the emissions factor model MOBILE6. The approved motor vehicle emissions budgets are 151.11 tons per day VOC for 2005 and 127.42 tons per day VOC and 280.4 tons per day NO_X for 2007.

(gg) Approval—On January 30, 2007, the Illinois Environmental Protection Agency (IEPA) requested that EPA find that the Illinois portion of the Chicago-Gary-Lake County, Illinois-Indiana (IL-IN) nonattainment area, attained the revoked 1-hour ozone National Ambient Air Quality Standard (NAAQS). After review of this submission, EPA approves this finding.

(hh) *Disapproval.* EPA is disapproving 35 Illinois Administrative Code part 217, subpart X, Voluntary NO_X Emissions Reduction Program, as a revision to the Illinois SIP.

(ii) *Approval.* EPA is approving a July 29, 2010, request from the State of Illinois for a waiver from the Clean Air Act requirement for Oxides of Nitrogen (NOx) Reasonably Available Control Technology (RACT) in the Illinois portions of the Chicago-Gary-Lake County, Illinois-Indiana (Cook, DuPage, Kane, Lake, McHenry, and Will Counties, and portions of Grundy (Aux Sable and Goose Lake Townships) and Kendall (Oswego Township) Counties in Illinois) and St. Louis, Missouri-Illinois (Jersey, Madison, Monroe, and St. Clair Counties in Illinois) 1997 8-hour ozone nonattainment areas.

(jj) *Determination of attainment.* On June 5, 2009, the state of Indiana requested that EPA find that the Indiana portion of the Chicago-Gary-Lake County, Illinois-Indiana (IL-IN) ozone nonattainment area has attained the 1997 8-hour ozone National Ambient Air Quality Standard (NAAQS). After review of Indiana's submission and 2006–2008 ozone air quality data for this ozone nonattainment area, EPA finds that the entire Chicago-Gary-Lake County, IL-IN area has attained the 1997 8-hour ozone NAAQS. Therefore, EPA has determined, as of March 12, 2010, that Cook, DuPage, Kane, Lake, McHenry, and Will Counties, and portions of Grundy County (Aux Sable and Goose Lake Townships) and Kendall County (Oswego Township) in Illinois have attained the 1997 8-hour ozone standard.

(kk) *Determination of attainment.* EPA has determined, as of June 9, 2011, that the St. Louis (MO-IL) metropolitan 1997 8-hour ozone nonattainment area has attained the 1997 8-hour ozone NAAQS. This determination, in accordance with 40 CFR 51.918, suspends the requirements for this area to submit an attainment demonstration, associated reasonably available control measures, reasonable further progress, contingency measures, and other plan elements related to attainment of the standards for as long as the area continues to meet the 1997 Ozone NAAQS. In addition, based upon EPA's review of the air quality data for the 3-year period 2007 to 2009, the St. Louis (MO-IL) ozone nonattainment area has attained the 1997 8-hour ozone NAAQS by the applicable attainment date of June 15, 2010.

(ll) *Approval*—On May 26, 2010, and September 16, 2011, Illinois submitted a request to redesignate the Illinois portion of the St. Louis, MO–IL area to attainment of the 1997 8-hour ozone standard. The St. Louis area includes Jersey, Madison, Monroe, and St. Clair Counties in Illinois and St. Louis City and Franklin, Jefferson, St. Charles and St. Louis Counties in Missouri. As part of the redesignation request, the State submitted a plan for maintaining the 1997 8-hour ozone standard through 2025 in the area as required by section 175A of the Clean Air Act. Part of the section 175A maintenance plan includes a contingency plan. The ozone maintenance plan establishes 2008 motor vehicle emissions budgets for the Illinois portion of the St. Louis area of 17.27 tpd for volatile organic compounds (VOC) and 52.57 tpd for nitrogen oxides (NO_X). In addition the maintenance plan establishes 2025 motor vehicle emissions budgets for the Illinois portion of the St. Louis area of 5.68 tpd for VOC and 15.22 tpd for NO_X.

(mm) *Emissions inventories for the 1997 8-hour ozone standard—*

(1) *Approval*—Illinois' 2002 emissions inventory satisfies the emissions inventory requirements of section 182(a)(1) of the Clean Air Act for the Illinois portion of the St. Louis, MO–IL area under the 1997 8-hour ozone standard.

(2) Approval—Illinois' 2002 volatile organic compounds and nitrogen oxides emission inventories satisfy the emissions inventory requirements of section 182(a)(1) of the Clean Air Act for the Illinois portion of the Chicago-Gary-Lake County, Illinois-Indiana

area under the 1997 8-hour ozone standard.

(nn) Approval—On July 23, 2009, and September 16, 2011, Illinois submitted a request to redesignate the Illinois portion of the Chicago-Gary-Lake County, Illinois-Indiana area to attainment of the 1997 8-hour ozone standard. The Illinois portion of the Chicago-Gary-Lake County, Illinois-Indiana area includes Cook, DuPage, Kane, Lake, McHenry, and Will Counties and portions of Grundy (Aux Sable and Goose Lake Townships) and Kendall (Oswego Township) Counties. As part of the redesignation request, the State submitted a plan for maintaining the 1997 8-hour ozone standard through 2025 in the area as required by section 175A of the Clean Air Act. Part of the section 175A maintenance plan includes a contingency plan. The ozone maintenance plan establishes 2008 motor vehicle emissions budgets for the Illinois portion of the Chicago-Gary-Lake County, Illinois-Indiana area of 117.23 tons per day (tpd) for volatile organic compounds (VOC) and 373.52 tpd for nitrogen oxides (NO_X). In addition, the maintenance plan establishes 2025 motor vehicle emissions budgets for the Illinois portion of the Chicago-Gary-Lake County, Illinois-Indiana area of 48.13 tpd for VOC and 125.27 tpd for NO_X.

(oo) Approval—On March 28, 2014, the State of Illinois submitted a revision to its State Implementation Plan for the Illinois portion of the Chicago-Gary-Lake County, Illinois-Indiana area (the Greater Chicago Area). The submittal established new Motor Vehicle Emissions Budgets (MVEB) for Volatile Organic Compounds (VOC) and Oxides of Nitrogen (NO_X) for the year 2025. The MVEBs for the Illinois portion of the Greater Chicago Area are: 60.13 tons/day of VOC emissions and 150.27 tons/day of NO_X emissions for the year 2025.

(pp) On September 3, 2014, Illinois submitted 2011 volatile organic compounds and oxides of nitrogen emission inventories for the Illinois portions of the Chicago-Naperville, Illinois-Indiana-Wisconsin and St. Louis, Missouri-Illinois nonattainment areas for the 2008 ozone national ambient air quality standard as a revision of the Illinois state implementation plan. The emission inventories are approved as a revision of the state's implementation plan.

(qq) *Determination of attainment.* As required by section 181(b)(2)(A) of the Clean Air Act, EPA has determined that the St. Louis, MO-IL marginal 2008 ozone nonattainment area has attained the NAAQS by the applicable attainment date of July 20, 2016.

[45 FR 55197, Aug. 19, 1980]

EDITORIAL NOTE: For FEDERAL REGISTER citations affecting § 52.726, see the List of CFR Sections Affected, which appears in the Finding Aids section of the printed volume and at *www.fdsys.gov*.

§ 52.727 [Reserved]

§ 52.728 Control strategy: Nitrogen dioxide. [Reserved]

§ 52.729 [Reserved]

§ 52.730 Compliance schedules.

(a) The requirements of § 51.262(a) of this chapter are not met since compliance schedules with adequate increments of progress have not been submitted for every source for which they are required.

(b) Federal compliance schedules. (1) Except as provided in paragraph (b)(3) of this section, the owner or operator of any stationary source subject to the following emission limiting regulations in the Illinois implementation plan shall comply with the applicable compliance schedule in paragraph (b)(2) of this section: Illinois Air Pollution Control Regulations Rule 203(d)(4), 203(d)(6)(B)(ii)(bb), 203(g)(1)(B), 203(g)(2), 203(g)(3), 203(g)(4), 204(c)(1)(A), 204(c)(2), 204(d), and 204(e).

(2) *Compliance schedules.* (i) The owner or operator of any stationary source subject to Illinois Air Pollution Control Regulation Rule 203(d)(4) shall take the following actions with respect to the source no later than the date specified.

(*a*) September 30, 1973—Advertise for bids for purchase and construction or installation of equipment, or for materials requisite for process modification sufficient to control particulate emissions from the source.

(*b*) November 15, 1973—Award contracts for emission control systems or

process modification, or issue orders for the purchase of component parts to accomplish emission control or process modification.

(*c*) May 31, 1974—Initiate onsite construction or installation of emission control system or process modification.

(*d*) March 31, 1975—Complete onsite construction or installation of emission system or process modification.

(*e*) May 31, 1975—Complete shakedown operation and performance test on source, submit performance test results to the Administrator; achieve full compliance with State agency regulation.

(ii) The owner or operator of any stationary source subject to Illinois Air Pollution Control Regulation Rule 203(d)(6)(B)(ii)(bb) shall take the following actions with respect to the source no later than the date specified.

(*a*) September 30, 1973—Advertise for bids for purchase and construction or for modification of equipment sufficient to control particulate emissions from the source.

(*b*) November 15, 1973—Award contracts for emissions control systems or process modification, or issue orders for the purchase of component parts to accomplish emission control or process modification.

(*c*) March 31, 1974—Initiate onsite construction or installation of emission control system.

(*d*) October 31, 1974—Complete onsite construction or installation of emission control system.

(*e*) December 31, 1974—Achieve final compliance with Illinois Air Pollution Control Regulations Rule 203(d)(6)(B)(ii)(bb).

(iii) (*a*) The owner or operator of any boiler or furnace of more than 250 million BTU per hour heat input subject to Illinois Air Pollution Control Regulation Rule 204(c)(1)(A), 204(c)(2), 204(d), and 204(e) shall notify the Administrator, no later than October 1, 1973, of his intent to utilize either low-sulfur fuel or stack gas desulfurization to the requirements of said regulation.

(*b*) Any owner or operator of a stationary source subject to paragraph (b)(2)(iii)(*a*) of this section who elects to utilize low sulfur fuel shall take the following actions with respect to the source no later than the date specified.

(*1*) November 1, 1973—Submit to the Administrator a projection of the amount of fuel, by types, that will be substantially adequate to enable compliance with Illinois Air Pollution Control Regulations Rule 204(c)(1)(A), 204(c)(2), 204(d), and 204(e) on May 31, 1975, and for at least one year thereafter.

(*2*) December 31, 1973—Sign contracts with fuel suppliers for fuel requirements as projected above.

(*3*) January 31, 1974—Submit a statement as to whether boiler modifications will be required. If modifications will be required, submit plans for such modifications.

(*4*) March 15, 1974—Let contracts for necessary boiler modifications, if applicable.

(*5*) June 15, 1974—Initiate onsite modifications, if applicable.

(*6*) March 31, 1975—Complete onsite modifications, if applicable.

(*7*) May 31, 1975—Final compliance with the emission limitation of Rules 204(c)(1)(A), 204(c)(2), 204(d), and 204(e).

(*c*) Any owner or operator of a fuel combustion source subject to paragraph (b)(2)(iii)(*a*) of this section who elects to utilize stack gas desulfurization shall take the following actions with respect to the source no later than the date specified.

(*1*) November 1, 1973—Let necessary contracts for construction.

(*2*) March 31, 1974—Initiate onsite construction.

(*3*) March 31, 1975—Complete onsite construction.

(*4*) May 31, 1975—Complete shakedown operations and performance test on source, submit performance test results to the Administrator; achieve full compliance with Rule 204(c)(1)(A), 204(c)(2), 204(d), and 204(e).

(iv) (*a*) The owner or operator of any stationary source subject to Illinois Air Pollution Control Regulations Rule 203(g)(1)(B), 203(g)(2), 203(g)(3), and 203(g)(4) shall notify the Administrator, no later than October 1, 1973, of his intent to utilize either low ash fuel or a stack gas cleaning system to meet the requirements of said regulation.

(*b*) Any owner or operator of a stationary source subject to paragraph (b)(2)(iv)(*a*) of this section who elects to utilize low ash fuel shall take the

following actions with respect to the source no later than the date specified.

(*1*) November 1, 1973—Submit to the Administrator a projection of the amount of fuel, by types, that will be substantially adequate to enable compliance with Illinois Air Pollution Control Regulations Rule 203(g)(1)(B), 203(g)(2), 203(g)(3), and 203(g)(4) on May 31, 1975, and for at least one year thereafter.

(*2*) December 31, 1973—Sign contracts with fuel suppliers for fuel requirements as projected above.

(*3*) January 31, 1974—Submit a statement as to whether boiler modifications will be required. If modifications will be required, submit plans for such modifications.

(*4*) March 15, 1974—Let contracts for necessary boiler modifications, if applicable.

(*5*) June 15, 1974—Initiate onsite modifications, if applicable.

(*6*) March 31, 1975—Complete onsite modifications, if applicable.

(*7*) May 31, 1975—Final compliance with the emission limitation of Rule 203(g)(1)(B), 203(g)(2), 203(g)(3), and 203(g)(4).

(*c*) Any owner or operator of a stationary source subject to paragraph (b)(2)(iv)(*a*) of this section who elects to utilize a stack gas cleaning system shall take the following actions with respect to the source no later than the date specified.

(*1*) January 15, 1974—Let necessary contracts for construction.

(*2*) April 1, 1974—Initiate onsite construction.

(*3*) April 1, 1975—Complete onsite construction.

(*4*) May 31, 1975—Complete shakedown operations and performance tests on source, submit performance test results to the Administrator; achieve full compliance with Rule 203(g)(1)(B), 203(g)(2), 203(g)(3), and 203(g)(4).

(v) Ten days prior to the conduct of any performance test required by this paragraph, the owner or operator of the affected source shall give notice of such test to the Administrator to afford him the opportunity to have an observer present.

(vi) Any owner or operator subject to a compliance schedule above shall certify to the Administrator, within five days after the deadline for each increment of progress in that schedule, whether or not the increment has been met.

(3)(i) None of the above paragraphs shall apply to a source which is presently in compliance with applicable regulations and which has certified such compliance to the Administrator by October 1, 1973. The Administrator may request whatever supporting information he considers necessary for proper certification.

(ii) Any compliance schedule adopted by the State and approved by the Administrator shall satisfy the requirements of this paragraph for the affected source.

(iii) Any owner or operator subject to a compliance schedule in this paragraph may submit to the Administrator no later than October 1, 1973, a proposed alternative compliance schedule. No such compliance schedule may provide for final compliance after the final compliance date in the applicable compliance schedule of this paragraph. If promulgated by the Administrator, such schedule shall satisfy the requirements of this paragraph for the affected source.

(4) Nothing in this paragraph shall preclude the Administrator from promulgating a separate schedule for any source to which the application of the compliance schedules in paragraph (b)(2) of this section fail to satisfy the requirements of §§ 51.261 and 51.262(a) of this chapter.

(c) [Reserved]

(d) The compliance schedules for the sources identified below are disapproved as not meeting the requirements of subpart N of this chapter. All regulations cited are air pollution control regulations of the State, unless otherwise noted.

Source	Location	Regulation involved	Date schedule adopted
CHRISTIAN COUNTY			
Allied Mills, Inc	Taylorville	204(c)	Feb. 28, 1973.

Source	Location	Regulation involved	Date schedule adopted
COOK COUNTY			
Harco Aluminum Inc	Chicago	204(c)	Dec. 9, 1973.
J. L. Clark Manufacturing Co	Downers Grove	205(f)	May 4, 1973.
Johnson & Johnson	Bedford Park	205(f)	Jun. 20, 1973.
Lloyd J. Harris Pie, Co. Inc	Chicago	204(c)	Feb. 27, 1973.
Union Oil Co. of California	.....do	204(c)	Jun. 19, 1973,
(a) No. 10 boiler			Dec. 13, 1973.
(b) 11BIA crude heater.			
W. H. Hutchingson & Son, Inc	.....do	205(f)	Aug. 12, 1973.
Western Rust Proof Co	.....do	204(c)	Oct. 10, 1973.
Wheeler Uniform Service Inc	.....do	204(c)	May 22, 1973.
Wm. Yuenger Manufacturing Co	.....do	204(c)	Aug. 16, 1973.
World's Finest Chocolate Inc	.....do	204(c)	May 30, 1973.
JACKSON COUNTY			
Tuck Industries, Inc	Carbondale	204(c)	Jun. 20, 1973.
KANE COUNTY			
All Steel Equipment Corp	Montgomery	204(f)	July 24, 1973.
Consolidated Food Inc	Aurora	205(f)	May 9, 1973.
LAKE COUNTY			
Morton Manufacturing Co	Libertyville	205(f)	Aug. 27, 1973.
LA SALLE COUNTY			
Allied Mills Inc	Mendota	204(c)	May 28, 1973.
MADISON COUNTY			
Clark Oil & Refining Corp	Hartford	204(f)	Feb. 22, 1973.
Granite City Steel Co	Granite City	203(d)(6)	Apr. 25, 1972.
(a) Coke oven pushing operations			as amended.
(b) Charging operations			May 21, 1973.
Illinois Power Company (Wood River Boiler No. 5)	E. Alton	204(c)	May 1, 1973.
Owens-Illinois Inc	Madison	204(c)	May 2, 1973.
Owen-Illinois Inc. (No. 2 Powerhouse)	Alton	204(c)	Mar. 30, 1973.
Shell Oil Co. (Cat. Cracker Units Nos. 1, 2)	Roxana	203(b)	Nov. 27, 1972.
RANDOLF COUNTY			
Chester Dairy Co	Chester	204(c)	Aug. 6, 1973.
ST. CLAIR COUNTY			
Lock Stove Co	East St. Louis	205(b)	June 11, 1973.
TAZEWELL COUNTY			
Quaker Oats Co	Pekin	204(c)	May 24, 1973.
VERMILLION COUNTY			
Lauhoff Grain Co	Danville	204(c)	Mar. 31, 1973.

[38 FR 16145, June 20, 1973, as amended at 38 FR 22742, Aug. 23, 1973; 38 FR 24342, Sept. 7, 1973; 39 FR 28155, Aug. 5, 1974; 51 FR 40675, 40676, 40677, Nov. 7, 1986; 54 FR 25258, June 14, 1989]

§ 52.731 Interstate pollutant transport provisions; What are the FIP requirements for decreases in emissions of nitrogen oxides?

(a)(1) The owner and operator of each source and each unit located in the State of Illinois and for which requirements are set forth under the CSAPR NO_X Annual Trading Program in subpart AAAAA of part 97 of this chapter must comply with such requirements. The obligation to comply with such requirements will be eliminated by the

promulgation of an approval by the Administrator of a revision to Illinois' State Implementation Plan (SIP) as correcting the SIP's deficiency that is the basis for the CSAPR Federal Implementation Plan under § 52.38(a), except to the extent the Administrator's approval is partial or conditional.

(2) Notwithstanding the provisions of paragraph (a)(1) of this section, if, at the time of the approval of Illinois' SIP revision described in paragraph (a)(1) of this section, the Administrator has already started recording any allocations of CSAPR NO_X Annual allowances under subpart AAAAA of part 97 of this chapter to units in the State for a control period in any year, the provisions of subpart AAAAA of part 97 of this chapter authorizing the Administrator to complete the allocation and recordation of CSAPR NO_X Annual allowances to units in the State for each such control period shall continue to apply, unless provided otherwise by such approval of the State's SIP revision.

(b)(1) The owner and operator of each source and each unit located in the State of Illinois and for which requirements are set forth under the CSAPR NO_X Ozone Season Group 1 Trading Program in subpart BBBBB of part 97 of this chapter must comply with such requirements with regard to emissions occurring in 2015 and 2016.

(2) The owner and operator of each source and each unit located in the State of Illinois and for which requirements are set forth under the CSAPR NO_X Ozone Season Group 2 Trading Program in subpart EEEEE of part 97 of this chapter must comply with such requirements with regard to emissions occurring in 2017 and each subsequent year. The obligation to comply with such requirements will be eliminated by the promulgation of an approval by the Administrator of a revision to Illinois' State Implementation Plan (SIP) as correcting the SIP's deficiency that is the basis for the CSAPR Federal Implementation Plan (FIP) under § 52.38(b), except to the extent the Administrator's approval is partial or conditional, provided that because the CSAPR FIP was promulgated as a partial rather than full remedy for an obligation of the State to address interstate air pollution, the SIP revision likewise will constitute a partial rather than full remedy for the State's obligation unless provided otherwise in the Administrator's approval of the SIP revision.

(3) Notwithstanding the provisions of paragraph (b)(2) of this section, if, at the time of the approval of Illinois' SIP revision described in paragraph (b)(2) of this section, the Administrator has already started recording any allocations of CSAPR NO_X Ozone Season Group 2 allowances under subpart EEEEE of part 97 of this chapter to units in the State for a control period in any year, the provisions of subpart EEEEE of part 97 of this chapter authorizing the Administrator to complete the allocation and recordation of CSAPR NO_X Ozone Season Group 2 allowances to units in the State for each such control period shall continue to apply, unless provided otherwise by such approval of the State's SIP revision.

[77 FR 75384, Dec. 20, 2012, as amended at 81 FR 74586 and 74594, Oct. 26, 2016]

§ 52.732 Interstate pollutant transport provisions; What are the FIP requirements for decreases in emissions of sulfur dioxide?

(a) The owner and operator of each source and each unit located in the State of Illinois and for which requirements are set forth under the CSAPR SO_2 Group 1 Trading Program in subpart CCCCC of part 97 of this chapter must comply with such requirements. The obligation to comply with such requirements will be eliminated by the promulgation of an approval by the Administrator of a revision to Illinois' State Implementation Plan (SIP) as correcting the SIP's deficiency that is the basis for the CSAPR Federal Implementation Plan under § 52.39, except to the extent the Administrator's approval is partial or conditional.

(b) Notwithstanding the provisions of paragraph (a) of this section, if, at the time of the approval of Illinois' SIP revision described in paragraph (a) of this section, the Administrator has already started recording any allocations of CSAPR SO_2 Group 1 allowances under subpart CCCCC of part 97 of this chapter to units in the State for a control period in any year, the provisions of

subpart CCCCC of part 97 of this chapter authorizing the Administrator to complete the allocation and recordation of CSAPR SO_2 Group 1 allowances to units in the State for each such control period shall continue to apply, unless provided otherwise by such approval of the State's SIP revision.

[76 FR 48364, Aug. 8, 2011. Redesignated at 77 FR 10334, Feb. 21, 2012, as amended at 81 FR 74586, Oct. 26, 2016]

§§ 52.733–52.735 [Reserved]

§ 52.736 Review of new sources and modifications.

(a) [Reserved]

(b) The rules submitted by the State on March 24, 1988, to satisfy the requirements of the Clean Air Act are approved. These rules are part 203: Major Stationary Sources Construction and Modification as effective March 22, 1991. The moratorium on construction and modification of new sources in nonattainment areas as provided in section 110(a)(2)(I) of the Clean Air Act is revoked.

[57 FR 59935, Dec. 17, 1992]

§ 52.737 Operating permits.

Emission limitation and other provisions contained in operating permits issued by the State in accordance with the provisions of the federally approved permit program shall be the applicable requirements of the federally approved Illinois SIP for the purpose of section 113 of the Clean Air Act and shall be enforceable by USEPA and by any person in the same manner as other requirements of the SIP. USEPA reserves the right to deem an operating permit not federally enforceable. Such a determination will be made according to appropriate procedures, and be based upon the permit, permit approval procedures or permit requirements which do not conform with the operating permit program requirements or the requirements of USEPA's underlying regulations.

[57 FR 59936, Dec. 17, 1992]

§ 52.738 Significant deterioration of air quality.

(a) The requirements of sections 160 through 165 of the Clean Air Act are not met, since the plan does not include approvable procedures for preventing the significant deterioration of air quality.

(b) *Regulations for preventing significant deterioration of air quality*. The provisions of § 52.21 except paragraph (a)(1) are hereby incorporated and made a part of the applicable State plan for the State of Illinois.

(c) All applications and other information required pursuant to § 52.21 from sources located in the State of Illinois shall be submitted to the state agency, Illinois Environmental Protection Agency, 1021 North Grand Avenue East, Springfield, Illinois 62794.

[45 FR 52741, Aug. 7, 1980, as amended at 46 FR 9584, Jan. 29, 1981; 68 FR 11323, Mar. 10, 2003; 68 FR 74489, Dec. 24, 2003; 75 FR 55275, Sept. 10, 2010]

§ 52.739 Permit fees.

(a) The requirements of section 110(a)(2)(K) of the Clean Air Act as amended in 1977 are not met since the state has not submitted to EPA, as a part of its State Implementation Plan, provisions for a permit fee system.

[46 FR 23237, Apr. 24, 1981]

§ 52.740 Interstate pollution.

(a) The requirements of section 126(a)(2) of the Clean Air Act as amended in 1977 are not met since the state has not submitted to EPA, as a part of its State Implementation Plan, the procedures on which the state is relying to notify nearby states of any proposed major stationary source which may significantly contribute to levels of air pollution in excess of the National Ambient Air Quality Standards in that state.

[46 FR 23237, Apr. 24, 1981]

§ 52.741 Control strategy: Ozone control measures for Cook, DuPage, Kane, Lake, McHenry and Will Counties.

(a) *General Provisions*—(1) *Abbreviations and conversion factors*. (i) The following abbreviations are used in § 52.741:

ASTM American Society for Testing and Materials
bbl barrels (42 gallons)
°C degrees Celsius or centigrade

cm centimeters
cu in. cubic inches
°F degrees Fahrenheit
FIP Federal implementation plan
ft feet
ft^2 square feet
g grams
gpm gallons per minute
g/mole grams per mole
gal gallons
hr hours
in inches
K degrees Kelvin
kcal kilocalories
kg kilograms
kg/hr kilograms per hour
kPa kilopascals; one thousand newtons per square meter
l liters
l/sec liters per second
lbs pounds
lbs/hr pounds per hour
lbs/gal pounds per gallon
LEL lower explosive limit
m meters
m^2 square meters
m^3 cubmic meters
mg milligrams
Mg Megagrams, metric tons or tonnes
ml milliliters
min minutes
MJ megajoules
mm Hg millimeters of mercury
ppm parts per million
ppmv parts per million by volume
psi pounds per square inch
psia pounds per square inch absolute
psig pounds per square inch gauge
scf standard cubic feet
scm standard cubic meters
sec seconds
SIP State implementation plan
sq cm square centimeters
sq in square inches
USEPA United States Environmental Protection Agency
VOC volatile organic compounds
VOL volatile organic liquids
VOM volatile organic materials

(ii) The following conversion factors are used in § 52.741.

English	Metric
1 gal	3.785 l.
1,000 gal	3,785 l or 3.785 m^3.
1 psia	6.897 kPa (51.71 mm Hg).
2.205 lbs	1 kg.
1 bbl	159.0 l.
1 cu in	16.39 ml.
1 lb/gal	119,800 mg/l.
1 ton	0.907 Mg.

(2) *Applicability*. (i) Any source that received a stay, as indicated in § 218.103(a)(2), remains subject to the stay if still in effect, or (if the stay is no longer in effect) the federally-promulgated or federally-approved rule applicable to such source.

(ii)(A) Effective November 20, 1996 Illinois Administrative Code Title 35: Environmental Protection, Subtitle B: Air pollution, Chapter I: Pollution Control Board, Subchapter c: Emissions Standards and Limitations for Stationary Sources, Part 211: Definitions and General Provisions, and Part 218: Organic Material Emission Standards and Limitations for the Chicago Area replace the requirements of 40 CFR 52.741 Control strategy: Ozone control measures for Cook, DuPage, Kane, Lake, McHenry and Will County as the federally enforceable control measures in these counties for the major non-Control Technique Guideline (CTG) sources in the Chicago area, previously subject to paragraph u, v, w, or x because of the applicability criteria in these paragraphs.

(B) In accordance with § 218.101(b), for the major non-CTG sources subject to paragraphs u, v, w, or x because of the applicability criteria of those paragraphs, the requirements of paragraphs u, v, w, and x, and the recordkeeping requirements in paragraph y and any related parts of § 52.741 necessary to implement these paragraphs (including, but not limited to, those paragraphs containing test methods and definitions), shall remain in effect and are enforceable after November 20, 1996 for the period from July 30, 1990 until November 20, 1996.

(iii)(A) Except as provided in paragraphs (a)(2) (i) and (ii) of this section, effective October 11, 1994, Illinois Administrative Code Title 35: Environmental Protection, Subtitle B: Air pollution, Chapter I: Pollution Control Board, Subchapter c: Emissions Standards and Limitations for Stationary Sources, Part 211: Definitions and General Provisions, and Part 218: Organic Material Emission Standards and Limitations for the Chicago Area replace the requirements of this § 52.741 Control strategy: Ozone control measures for Cook, DuPage, Kane, Lake, McHenry and Will County as the federally enforceable control measures in these counties.

(B) In accordance with § 218.101(b), the requirements of § 52.741 shall remain in effect and are enforceable after October 11, 1994, for the period from July 30, 1990, to October 11, 1994.

(3) *Definitions*. The following terms are defined for the purpose of § 52.741.

NOTE: The Federal definitions supersede the State definitions for these terms, which were previously approved by USEPA as part of the SIP. The federally approved definitions for all other terms remain in effect and applicable to these Federal rules.

Accelacota means a pharmaceutical coating operation which consists of a horizontally rotating perforated drum in which tablets are placed, a coating is applied by spraying, and the coating is dried by the flow of air across the drum through the perforations.

Accumulator means the reservoir of a condensing unit receiving the condensate from a surface condenser.

Actual emissions means the actual quantity of VOM emissions from an emission source during a particular time period.

Adhesive means any substance or mixture of substances intended to serve as a joining compound.

Administrator means the Administrator of the USEPA or that person's designee.

Afterburner means a control device in which materials in gaseous effluent are combusted.

Air contaminant means any solid, liquid, or gaseous matter, any odor, or any form of energy, that is capable of being released into the atmosphere from an emission source.

Air dried coatings means any coatings that dry by use of air or forced air at temperatures up to 363.15 K (194 °F).

Air pollution means the presence in the atmosphere of one or more air contaminants in sufficient quantities and of such characteristics and duration as to be injurious to human, plant, or animal life, to health, or to property, or to unreasonably interfere with the enjoyment of life or property.

Air pollution control equipment means any equipment or facility of a type intended to eliminate, prevent, reduce or control the emission of specified air contaminants to the atmosphere.

Air suspension coater/dryer means a pharmaceutical coating operation which consists of vertical chambers in which tablets or particles are placed, and a coating is applied and then dried while the tablets or particles are kept in a fluidized state by the passage of air upward through the chambers.

Air-assisted airless spray means a spray coating method which combines compressed air with hydraulic pressure to atomize the coating material into finer droplets than is achieved with pure airless spray. Lower hydraulic pressure is used than with airless spray.

Airless spray means a spray coating method in which the coating is atomized by forcing it through a small opening at high pressure. The coating liquid is not mixed with air before exiting from the nozzle.

Allowable emissions means the quantity of VOM emissions during a particular time period from a stationary source calculated using the maximum rated capacity of the source (unless restricted by federally enforceable limitations on operating rate, hours of operation, or both) and the most stringent of:

(A) The applicable standards in 40 CFR parts 60 and 61:

(B) The applicable implementation plan; or

(C) A federally enforceable permit.

Ambient air quality standards means those standards designed to protect the public health and welfare codified in 40 CFR part 50 and promulgated from time to time by the USEPA pursuant to authority contained in Section 108 of the Clean Air Act, 42 U.S.C. 7401 *et seq.*, as amended from time to time.

Applicator means a device used in a coating line to apply coating.

As applied means the exact formulation of a coating during application on or impregnation into a substrate.

Asphalt means the dark-brown to black cementitious material (solid, semisolid, or liquid in consistency) of which the main constituents are bitumens which occur naturally or as a residue of petroleum refining.

Automobile means a motor vehicle capable of carrying no more than 12 passengers.

Automobile or light-duty truck assembly plant means a facility where parts are

assembled or finished for eventual inclusion into a finished automobile or light-duty truck ready for sale to vehicle dealers, but not including customizers, body shops, and other repainters.

Automobile or light-duty truck refinishing means the repainting of used automobiles and light-duty trucks.

Baked coatings means any coating which is cured or dried in an oven where the oven air temperature exceeds 90 °C (194 °F).

Binders means organic materials and resins which do not contain VOM's.

Bituminous coatings means black or brownish coating materials which are soluble in carbon disulfide, which consist mainly of hydrocarbons, and which are obtained from natural deposits or as residues from the distillation of crude oils or of low grades of coal.

Brush or wipe coating means a manual method of applying a coating using a brush, cloth, or similar object.

Bulk gasoline plant means a gasoline storage and distribution facility with an average throughput of 76,000 l (20,000 gal) or less on a 30-day rolling average that distributes gasoline to gasoline dispensing facilities.

Can means any metal container, with or without a top, cover, spout or handles, into which solid or liquid materials are packaged.

Can coating means any coating applied on a single walled container that is manufactured from metal sheets thinner than 29 gauge (0.0141 in.).

Can coating facility means a facility that includes one or more can coating line(s).

Can coating line means a coating line in which any protective, decorative, or functional coating is applied onto the surface of cans or can components.

Capture means the containment or recovery of emissions from a process for direction into a duct which may be exhausted through a stack or sent to a control device. The overall abatement of emissions from a process with an add-on control device is a function both of the capture efficiency and of the control device.

Capture device means a hood, enclosed room floor sweep or other means of collecting solvent or other pollutants into a duct. The pollutant can then be directed to a pollution control device such as an afterburner or carbon adsorber. Sometimes the term is used loosely to include the control device.

Capture efficiency means the fraction of all VOM generated by a process that are directed to an abatement or recovery device.

Capture system means all equipment (including, but not limited to, hoods, ducts, fans, ovens, dryers, etc.) used to contain, collect and transport an air pollutant to a control device.

Clean Air Act means the Clean Air Act of 1963, as amended, including the Clean Air Act Amendments of 1977, (42 U.S.C. 7401 *et seq.*).

Clear coating means coatings that lack color and opacity or are transparent using the undercoat as a reflectant base or undertone color.

Clear topcoat means the final coating which contains binders, but not opaque pigments, and is specifically formulated to form a transparent or translucent solid protective film.

Closed vent system means a system that is not open to the atmosphere and is composed of piping, connections, and, if necessary, flow inducing devices that transport gas or vapor from an emission source to a control device.

Coating means a material applied onto or impregnated into a substrate for protective, decorative, or functional purposes. Such materials include, but are not limited to, paints, varnishes, sealers, adhesives, thinners, diluents, and inks.

Coating applicator means equipment used to apply a coating.

Coating line means an operation consisting of a series of one or more coating applicators and any associated flash-off areas, drying areas, and ovens wherein a surface coating is applied, dried, or cured. (It is not necessary for an operation to have an oven, or flash-off area, or drying area to be included in this definition.)

Coating plant means any plant that contains one or more coating line(s).

Coil means any flat metal sheet or strip that is rolled or wound in concentric rings.

Coil coating means any coating applied on any flat metal sheet or strip that comes in rolls or coils.

Coil coating facility means a facility that includes one or more coil coating line(s).

Coil coating line means a coating line in which any protective, decorative or functional coating is applied onto the surface of flat metal sheets, strips, rolls, or coils for industrial or commercial use.

Cold cleaning means the process of cleaning and removing soils from surfaces by spraying, brushing, flushing, or immersion while maintaining the organic solvent below its boiling point. Wipe cleaning is not included in this definition.

Component means, with respect to synthetic organic chemical and polymer manufacturing equipment, and petroleum refining and related industries, any piece of equipment which has the potential to leak VOM including, but not limited to, pump seals, compressor seals, seal oil degassing vents, pipeline valves, pressure relief devices, process drains, and open ended pipes. This definition excludes valves which are not externally regulated, flanges, and equipment in heavy liquid service. For purposes of paragraph (i) of this section, this definition also excludes bleed ports of gear pumps in polymer service.

Concrete curing compounds means any coating applied to freshly poured concrete to retard the evaporation of water.

Condensate means volatile organic liquid separated from its associated gases, which condenses due to changes in the temperature or pressure and remains liquid at standard conditions.

Continuous process means, with respect to polystyrene resin, a method of manufacture in which the styrene raw material is delivered on a continuous basis to the reactor in which the styrene is polymerized to polystyrene.

Control device means equipment (such as an afterburner or adsorber) used to remove or prevent the emission of air pollutants from a contaminated exhaust stream.

Control device efficiency means the ratio of pollution prevented by a control device and the pollution introduced to the control device, expressed as a percentage.

Conveyorized degreasing means the continuous process of cleaning and removing soils from surfaces utilizing either cold or vaporized solvents.

Crude oil means a naturally occurring mixture which consists of hydrocarbons and sulfur, nitrogen, or oxygen derivatives of hydrocarbons and which is a liquid at standard conditions.

Crude oil gathering means the transportation of crude oil or condensate after custody transfer between a production facility and a reception point.

Custody transfer means the transfer of produced petroleum and/or condensate after processing and/or treating in the producing operations, from storage tanks or automatic transfer facilities to pipelines or any other forms of transportation.

Daily-weighted average VOM content means the average VOM content of two or more coatings as applied on a coating line during any day, taking into account the fraction of total coating volume that each coating represents, as calculated with the following equation:

$$VOM_w = \left[\frac{\sum_{i=1}^{n} V_i C_i}{V_T} \right]$$

Where:

VOM_w = The average VOM content of two or more coatings as applied each day on a coating line in units of kg VOM/l (lbs VOM/gal) of coating (minus water and any compounds which are specifically exempted from the definition of VOM),

n = The number of different coatings as applied each day on a coating line,

V_i = The volume of each coating (minus water and any compounds which are specifically exempted from the definition of VOM) as applied each day on a coating line in units of l (gal).

C_i = The VOM content of each coating as applied each day on a coating line in units of kg VOM/l (lbs VOM/gal) of coating (minus water and any compounds which are specifically exempted from the definition of VOM), and

V_T = The total volume of all coatings (minus water and any compounds which are specifically exempted from the definition of VOM) as applied each day on a coating line in units of l (gal).

Day means the consecutive 24 hours beginning at 12 a.m. (midnight) local time.

Degreaser means any equipment or system used in solvent cleaning.

Delivery vessel means any tank truck or trailer equipped with a storage tank that is used for the transport of gasoline to a stationary storage tank at a gasoline dispensing facility, bulk gasoline plant, or bulk gasoline terminal.

Dip coating means a method of applying coatings in which the part is submerged in a tank filled with the coating.

Drum means any cylindrical metal shipping container of 13- to 110-gallon capacity.

Electrostatic bell or disc spray means an electrostatic spray coating method in which a rapidly-spinning bell- or disc-shaped applicator is used to create a fine mist and apply the coating with high transfer efficiency.

Electrostatic spray means a spray coating method in which opposite electrical charges are applied to the substrate and the coating. The coating is attracted to the object due to the electrostatic potential between them.

Emission source and source mean any facility from which VOM is emitted or capable of being emitted into the atmosphere.

Enamel means a coating that cures by chemical cross-linking of its base resin. Enamels can be distinguished from lacquers because enamels are not readily resoluble in their original solvent.

Enclose means to cover any VOL surface that is exposed to the atmosphere.

End sealing compound coat means a compound applied to can ends which functions as a gasket when the end is assembled onto the can.

Excessive release means a discharge of more than 295 g (0.65 lbs) of mercaptans and/or hydrogen sulfide into the atmosphere in any 5-minute period.

Exterior base coat means a coating applied to the exterior of a can body, or flat sheet to provide protection to the metal or to provide background for any lithographic or printing operation.

Exterior end coat means a coating applied to the exterior end of a can to provide protection to the metal.

External-floating roof means a cover over an open top storage tank consisting of a double deck or pontoon single deck which rests upon and is supported by the volatile organic liquid being contained and is equipped with a closure seal or seals to close the space between the roof edge and tank shell.

Extreme environmental conditions means exposure to any or all of the following: ambient weather conditions; temperatures consistently above 95 °C (203 °F); detergents; abrasive and scouring agents; solvents; or corrosive atmospheres.

Extreme performance coating means any coating which during intended use is exposed to extreme environmental conditions.

Fabric coating means any coating applied on textile fabric. Fabric coating includes the application of coatings by impregnation.

Fabric coating facility means a facility that includes one or more fabric coating lines.

Fabric coating line means a coating line in which any protective, decorative, or functional coating or reinforcing material is applied on or impregnated into a textile fabric.

Federally enforceable means all limitations and conditions which are enforceable by the Administrator including those requirements developed pursuant to 40 CFR parts 60 and 61; requirements within any applicable implementation plan; and any permit requirements established pursuant to 40 CFR 52.21 or under regulations approved pursuant to 40 CFR part 51 subpart I and 40 CFR 51.166.

Final repair coat means the repainting of any topcoat which is damaged during vehicle assembly.

Firebox means the chamber or compartment of a boiler or furnace in which materials are burned, but not the combustion chamber or afterburner of an incinerator.

Fixed-roof tank means a cylindrical shell with a permanently affixed roof.

Flexographic printing means the application of words, designs, and pictures to a substrate by means of a roll printing technique in which the pattern to be applied is raised above the printing roll and the image carrier is made of elastomeric materials.

Flexographic printing line means a printing line in which each roll printer uses a roll with raised areas for applying an image such as words, designs, or pictures to a substrate. The image carrier on the roll is made of rubber or other elastome

Floating roof means a roof on a stationary tank, reservoir, or other container which moves vertically upon change in volume of the stored material.

Fountain solution means the solution which is applied to the image plate to maintain hydrophilic properties of the non-image areas.

Fuel combustion emission source means any furnace, boiler, or similar equipment used for the primary purpose of producing heat or power by indirect heat transfer.

Fuel gas system means a system for collection of refinery fuel gas including, but not limited to, piping for collecting tail gas from various process units, mixing drums and controls, and distribution piping.

Gas/gas method means either of two methods for determining capture which rely only on gas phase measurements. The first method requires construction of a temporary total enclosure (TTE) to ensure that all would-be fugitive emissions are measured. The second method uses the building or room which houses the facility as an enclosure. The second method requires that all other VOM sources within the room be shut down while the test is performed, but all fans and blowers within the room must be operated according to normal procedures.

Gas service means that the component contains process fluid that is in the gaseous state at operating conditions.

Gasoline means any petroleum distillate or petroleum distillate/alcohol blend having a Reid vapor pressure of 27.6 kPa or greater which is used as a fuel for internal combustion engines.

Gasoline dispensing facility means any site where gasoline is transferred from a stationary storage tank to a motor vehicle gasoline tank used to provide fuel to the engine of that motor vehicle.

Gross vehicle weight means the manufacturer's gross weight rating for the individual vehicle.

Gross vehicle weight rating means the value specified by the manufacturer as the maximum design loaded weight of a single vehicle.

Heated airless spray means an airless spray coating method in which the coating is heated just prior to application.

Heatset means a class of web-offset lithography which requires a heated dryer to solidify the printing inks.

Heatset-web-offset lithographic printing line means a lithographic printing line in which a blanket cylinder is used to transfer ink from a plate cylinder to a substrate continuously fed from a roll or an extension process and an oven is used to solidify the printing inks.

Heavy liquid means liquid with a true vapor pressure of less than 0.3 kPa (0.04 psi) at 294.3 K (70 °F) established in a standard reference text or as determined by ASTM method D2879–86 (incorporated by reference as specified in 40 CFR 52.742); or which has 0.1 Reid Vapor Pressure as determined by ASTM method D323–82 (incorporated by reference as specified in 40 CFR 52.742); or which when distilled requires a temperature of 421.95 K (300 °F) or greater to recover 10 percent of the liquid as determined by ASTM method D86–82 (incorporated by reference as specified in 40 CFR 52.742).

Heavy off-highway vehicle products means, for the purpose of paragraph (e) of this section, heavy construction, mining, farming, or material handling equipment; heavy industrial engines; diesel-electric locomotives and associated power generation equipment; and the components of such equipment or engines.

Heavy off-highway vehicle products coating facility means a facility that includes one or more heavy off-highway vehicle products coating line(s).

Heavy off-highway vehicle products coating line means a coating line in which any protective, decorative, or functional coating is applied onto the surface of heavy off-highway vehicle products.

High temperature aluminum coating means a coating that is certified to withstand a temperature of 537.8 °C (1000 °F) for 24 hours.

Hood means a partial enclosure or canopy for capturing and exhausting,

by means of a draft, the organic vapors or other fumes rising from a coating process or other source.

Hood capture efficiency means the emissions from a process which are captured by the hood and directed into a control device, expressed as a percentage of all emissions.

Hot well means the reservoir of a condensing unit receiving the condensate from a barometric condenser.

Hour means a block period of 60 minutes (*e.g.*, 1 a.m. to 2 a.m.).

In vacuum service means, for the purpose of paragraph (i) of this section, equipment which is operating at an internal pressure that is at least 5 kPa (0.73 psia) below ambient pressure.

In-process tank means a container used for mixing, blending, heating, reacting, holding, crystallizing, evaporating or cleaning operations in the manufacture of pharmaceuticals.

Incinerator means a combustion apparatus in which refuse is burned.

Indirect heat transfer means transfer of heat in such a way that the source of heat does not come into direct contact with process materials.

Ink means a coating used in printing, impressing, or transferring an image onto a substrate.

Interior body spray coat means a coating applied by spray to the interior of a can body.

Internal-floating roof means a cover or roof in a fixed-roof tank which rests upon and is supported by the volatile organic liquid being contained and is equipped with a closure seal or seals to close the space between the roof edge and tank shell.

Lacquers means any clear wood finishes formulated with nitrocellulose or synthetic resins to dry by evaporation without chemical reaction, including clear lacquer sanding sealers.

Large appliance means any residential and commercial washers, dryers, ranges, refrigerators, freezers, water heaters, dish washers, trash compactors, air conditioners, and other similar products.

Large appliance coating means any coating applied to the component metal parts (including, but not limited to, doors, cases, lids, panels, and interior support parts) of residential and commercial washers, dryers, ranges, refrigerators, freezers, water heaters, dish washers, trash compactors, air conditioners, and other similar products.

Large appliance coating facility means a facility that includes one or more large appliance coating line(s).

Large appliance coating line means a coating line in which any protective, decorative, or functional coating is applied onto the surface of large appliances.

Light liquid means VOM in the liquid state which is not defined as heavy liquid.

Light-duty truck means any motor vehicle rated at 3,850 kg gross vehicle weight or less, designed mainly to transport property.

Liquid/gas method means either of two methods for determining capture which require both gas phase and liquid phase measurements and analysis. The first method requires construction of a TTE. The second method uses the building or room which houses the facility as an enclosure. The second method requires that all other VOM sources within the room be shut down while the test is performed, but all fans and blowers within the room must be operated according to normal procedures.

Liquid service means that the equipment or component contains process fluid that is in a liquid state at operating conditions.

Lithographic printing line means a printing line, except that the substrate is not necessarily fed from an unwinding roll, in which each roll printer uses a roll where both the image and non-image areas are essentially in the same plane (planographic).

Magnet wire means aluminum or copper wire formed into an electromagnetic coil.

Magnet wire coating means any coating or electrically insulating varnish or enamel applied to magnet wire.

Magnet wire coating facility means a facility that includes one or more magnet wire coating line(s).

Magnet wire coating line means a coating line in which any protective, decorative, or functional coating is applied onto the surface of a magnet wire.

Malfunction means any sudden and unavoidable failure of air pollution control equipment, process equipment,

or a process to operate in a normal or usual manner. Failures that are caused entirely or in part by poor maintenance, careless operation, or any other preventable upset condition or preventable equipment breakdown shall not be considered malfunctions.

Manufacturing process means a method whereby a process emission source or series of process emission sources is used to convert raw materials, feed stocks, subassemblies, or other components into a product, either for sale or for use as a component in a subsequent manufacturing process.

Maximum theoretical emissions means the quantity of volatile organic material emissions that theoretically could be emitted by a stationary source before add-on controls based on the design capacity or maximum production capacity of the source and 8760 hours per year. The design capacity or maximum production capacity includes use of coating(s) or ink(s) with the highest volatile organic material content actually used in practice by the source.

Metal furniture means a furniture piece including, but not limited to, tables, chairs, waste baskets, beds, desks, lockers, benches, shelving, file cabinets, lamps, and room dividers.

Metal furniture coating means any non-adhesive coating applied to any furniture piece made of metal or any metal part which is or will be assembled with other metal, wood, fabric, plastic or glass parts to form a furniture piece including, but not limited to, tables, chairs, waste baskets, beds, desks, lockers, benches, shelving, file cabinets, lamps, and room dividers. This definition shall not apply to any coating line coating miscellaneous metal parts or products.

Metal furniture coating facility means a facility that includes one or more metal furniture coating line(s).

Metal furniture coating line means a coating line in which any protective, decorative, or functional coating is applied onto the surface of metal furniture.

Metallic shoe-type seal means a primary or secondary seal constructed of metal sheets (shoes) which are joined together to form a ring, springs, or levers which attach the shoes to the floating roof and hold the shoes against the tank wall, and a coated fabric which is suspended from the shoes to the floating roof.

Miscellaneous fabricated product manufacturing process means:

(A) A manufacturing process involving one or more of the following applications, including any drying and curing of formulations, and capable of emitting VOM:

(*1*) Adhesives to fabricate or assemble components or products.

(*2*) Asphalt solutions to paper or fiberboard.

(*3*) Asphalt to paper or felt.

(*4*) Coatings or dye to leather.

(*5*) Coatings to plastic.

(*6*) Coatings to rubber or glass.

(*7*) Disinfectant material to manufactured items.

(*8*) Plastic foam scrap or ''fluff'' from the manufacture of foam containers and packaging material to form resin pallets.

(*9*) Resin solutions to fiber substances.

(*10*) Viscose solutions for food casings.

(B) The storage and handling of formulations associated with the process described above, and the use and handling of organic liquids and other substances for clean-up operations associated with the process described in this definition.

Miscellaneous formulation manufacturing process means:

(A) A manufacturing process which compounds one or more of the following and is capable of emitting VOM:

(*1*) Adhesives.

(*2*) Asphalt solutions.

(*3*) Caulks, sealants, or waterproofing agents.

(*4*) Coatings, other than paint and ink.

(*5*) Concrete curing compounds.

(*6*) Dyes.

(*7*) Friction materials and compounds.

(*8*) Resin solutions.

(*9*) Rubber solutions.

(*10*) Viscose solutions.

(B) The storage and handling of formulations associated with the process

described above, and the use and handling of organic liquids and other substances for clean-up operations associated with the process described in this definition.

Miscellaneous metal parts or products means any metal part or metal product, even if attached to or combined with a nonmental part or product, except cans, coils, metal furniture, large appliances, magnet wire, automobiles, ships, and airplane bodies.

Miscellaneous metal parts and products coating means any coating applied to any metal part or metal product, even if attached to or combined with a nonmetal part or product, except cans, coils, metal furniture, large appliances, and magnet wire. Prime coat, prime surfacer coat, topcoat, and final repair coat for automobiles and light-duty trucks are not miscellaneous metal parts and products coatings. However, underbody anti-chip (*e.g.*, underbody plastisol) automobile, and light-duty truck coatings are miscellaneous metal parts and products coatings. Also, automobile or light-duty truck refinishing coatings, coatings applied to the exterior of marine vessels, coatings applied to the exterior of airplanes, and the customized topcoating of automobiles and trucks if production is less than 35 vehicles per day are not miscellaneous metal parts and products coatings.

Miscellaneous metal parts or products coating facility means a facility that includes one or more miscellaneous metal parts or products coating lines.

Miscellaneous metal parts or products coating line means a coating line in which any protective, decorative, or functional coating is applied onto the surface of miscellaneous metal parts or products.

Miscellaneous organic chemical manufacturing process means:

(A) A manufacturing process which produces by chemical reaction, one or more of the following organic compounds or mixtures of organic compounds and which is capable of emitting VOM:

(*1*) Chemicals listed in appendix A of this section.

(*2*) Chlorinated and sulfonated compounds.

(*3*) Cosmetic, detergent, soap, or surfactant intermediaries or specialties and products.

(*4*) Disinfectants.

(*5*) Food additives.

(*6*) Oil and petroleum product additives.

(*7*) Plasticizers.

(*8*) Resins or polymers.

(*9*) Rubber additives.

(*10*) Sweeteners.

(*11*) Varnishes.

(B) The storage and handling of formulations associated with the process described above and the use and handling of organic liquids and other substances for clean-up operations associated with the process described in this definition.

Monitor means to measure and record.

Multiple package coating means a coating made from more than one different ingredient which must be mixed prior to using and has a limited pot life due to the chemical reaction which occurs upon mixing.

Offset means, with respect to printing and publishing operations, use of a blanket cylinder to transfer ink from the plate cylinder to the surface to be printed.

Opaque stains means all stains that are not semi-transparent stains.

Open top vapor depressing means the batch process of cleaning and removing soils from surfaces by condensing hot solvent vapor on the colder metal parts.

Open-ended valve means any valve, except pressure relief devices, having one side of the valve in contact with process fluid and one side open to the atmosphere, either directly or through open piping.

Organic compound means any compound of carbon, excluding carbon monoxide, carbon dioxide, carbonic acid, metallic carbides or carbonates, and ammonium carbonate.

Organic material means any chemical compound of carbon including diluents and thinners which are liquids at standard conditions and which are used as dissolvers, viscosity reducers, or cleaning agents, but excluding methane, carbon monoxide, carbon dioxide, carbonic acid, metallic carbonic acid,

metallic carbide, metallic carbonates, and ammonium carbonate.

Organic vapor means the gaseous phase of an organic material or a mixture of organic materials present in the atmosphere.

Oven means a chamber within which heat is used for one or more of the following purposes: Dry, bake, cure, or polymerize a coating or ink.

Overall control means the product of the capture efficiency and the control device efficiency.

Overvarnish means a transparent coating applied directly over ink or coating.

Owner or operator means any person who owns, operates, leases, controls, or supervises an emission source or air pollution control equipment.

Packaging rotogravure printing means rotogravure printing upon paper, paper board, metal foil, plastic film, and other substrates, which are, in subsequent operations, formed into packaging products or labels for articles to be sold.

Packaging rotogravure printing line means a rotogravure printing line in which surface coatings are applied to paper, paperboard, foil, film, or other substrates which are to be used to produce containers, packaging products, or labels for articles.

Pail means any cylindrical metal shipping container of 1- to 12-gallon capacity and constructed of 29-gauge and heavier metal.

Paint manufacturing plant means a plant that mixes, blends, or compounds enamels, lacquers, sealers, shellacs, stains, varnishes, or pigmented surface coatings.

Paper coating means any coating applied on paper, plastic film, or metallic foil to make certain products, including (but not limited to) adhesive tapes and labels, book covers, post cards, office copier paper, drafting paper, or pressure sensitive tapes. Paper coating includes the application of coatings by impregnation and/or saturation.

Paper coating facility means a facility that includes one or more paper coating lines.

Paper coating line means a coating line in which any protective, decorative, or functional coating is applied on, saturated into, or impregnated into paper, plastic film, or metallic foil to make certain products, including (but not limited to) adhesive tapes and labels, book covers, post cards, office copier paper, drafting paper, and pressure sensitive tapes.

Parts per million (volume) means a volume/volume ratio which expresses the volumetric concentration of gaseous air contaminant in a million unit volume of gas.

Person means any individual, corporation, partnership, association, State, municipality, political subdivision of a State; any agency, department, or instrumentality of the United States; and any officer, agent, or employee thereof.

Petroleum means the crude oil removed from the earth and the oils derived from tar sands, shale, and coal.

Petroleum refinery means any facility engaged in producing gasoline, kerosene, distillate fuel oils, residual fuel oils, lubricants, or other products through distillation of petroleum, or through redistillation, cracking, or reforming of unfinished petroleum derivatives.

Pharmaceutical means any compound or mixture, other than food, used in the prevention, diagnosis, alleviation, treatment, or cure of disease in man and animal.

Pharmaceutical coating operation means a device in which a coating is applied to a pharmaceutical, including air drying or curing of the coating.

Pigmented coatings means opaque coatings containing binders and colored pigments which are formulated to conceal the wood surface either as an undercoat or topcoat.

Plant means all of the pollutant-emitting activities which belong to the same industrial grouping, are located on one or more contiguous or adjacent properties, and are under the control of the same person (or persons under common control), except the activities of any marine vessel. Pollutant-emitting activities shall be considered as part of the same industrial grouping if they belong to the same ''Major Group'' (*i.e.*, which have the same two-digit code) as described in the ''Standard Industrial Classification Manual, 1987'' (incorporated by reference as specified in 40 CFR 52.742).

Plasticizers means a substance added to a polymer composition to soften and add flexibility to the product.

Prime coat means the first of two or more coatings applied to a surface.

Prime surfacer coat means a coating used to touch up areas on the surface of automobile or light-duty truck bodies not adequately covered by the prime coat before application of the top coat. The prime surfacer coat is applied between the prime coat and topcoat. An anti-chip coating applied to main body parts (*e.g.,* rocker panels, bottom of doors and fenders, and leading edge of roof) is a prime surfacer coat.

Primers means any coatings formulated and applied to substrates to provide a firm bond between the substrate and subsequent coats.

Printing means the application of words, designs, and pictures to a substrate using ink.

Printing line means an operation consisting of a series of one or more roll printers and any associated roll coaters, drying areas, and ovens wherein one or more coatings are applied, dried, and/or cured.

Process means any stationary emission source other than a fuel combustion emission source or an incinerator.

Production equipment exhaust system means a system for collecting and directing into the atmosphere emissions of volatile organic material from reactors, centrifuges, and other process emission sources.

Publication rotogravure printing line means a rotogravure printing line in which coatings are applied to paper which is subsequently formed into books, magazines, catalogues, brochures, directories, newspaper supplements, or other types of printed material.

Reactor means a vat, vessel, or other device in which chemical reactions take place.

Refiner means any person who owns, leases operates, controls, or supervises a refinery.

Refinery unit, process unit or unit means a set of components which are a part of a basic process operation such as distillation, hydrotreating, cracking, or reforming of hydrocarbons.

Refrigerated condenser means a surface condenser in which the coolant supplied to the condenser has been cooled by a mechanical device, other than by a cooling tower or evaporative spray cooling, such as refrigeration unit or steam chiller unit.

Repair coatings means coatings used to correct imperfections or damage to furniture surface.

Repaired means, for the purpose of paragraph (i) of this section, that equipment component has been adjusted, or otherwise altered, to eliminate a leak.

Roll coater means an apparatus in which a uniform layer of coating is applied by means of one or more rolls across the entire width of a moving substrate.

Roll printer means an apparatus used in the application of words, designs, or pictures to a substrate, usually by means of one or more rolls each with only partial coverage.

Roll printing means the application of words, designs, and pictures to a substrate usually by means of a series of hard rubber or metal rolls each with only partial coverage.

Roller coating means a method of applying a coating to a sheet or strip in which the coating is transferred by a roller or series of rollers.

Rotogravure printing means the application of words, designs, and pictures to a substrate by means of a roll printing technique in which the pattern to be applied is recessed relative to the non-image area.

Rotogravure printing line means a printing line in which each roll printer uses a roll with recessed areas for applying an image to a substrate.

Safety relief valve means a valve which is normally closed and which is designed to open in order to relieve excessive pressures within a vessel or pipe.

Sanding sealers means any coatings formulated for and applied to bare wood for sanding and to seal the wood for subsequent application of varnish. To be considered a sanding sealer a coating must be clearly labelled as such.

Sealer means a coating containing binders which seals wood prior to the application of the subsequent coatings.

Semi-transparent stains means stains containing dyes or semi-transparent pigments which are formulated to enhance wood grain and change the color of the surface but not to conceal the surface, including, but not limited to, sap stain, toner, non-grain raising stains, pad stain, or spatter stain.

Set of safety relief valves means one or more safety relief valves designed to open in order to relieve excessive pressures in the same vessel or pipe.

Sheet basecoat means a coating applied to metal when the metal is in sheet form to serve as either the exterior or interior of a can for either two-piece or three-piece cans.

Side-seam spray coat means a coating applied to the seam of a three-piece can.

Single coat means one coating application applied to a metal surface.

Solvent means a liquid substance that is used to dissolve or dilute another substance.

Solvent cleaning means the process of cleaning soils from surfaces by cold cleaning, open top vapor degreasing, or conveyorized degreasing.

Specified air contaminant means any air contaminant as to which this Section contains emission standards or other specific limitations.

Splash loading means a method of loading a tank, railroad tank car, tank truck, or trailer by use of other than a submerged loading pipe.

Standard conditions means a temperature of 70 °F and a pressure of 14.7 psia.

Standard cubic foot (scf) means the volume of one cubic foot of gas at standard conditions.

Standard Industrial Classification Manual means the Standard Industrial Classification Manual (1987), Superintendent of Documents, U.S. Government Printing Office, Washington, DC 20402 (incorporated by reference as specified in 40 CFR 52.742).

Start-up means the setting in operation of an emission source for any purpose.

Stationary emission source and *Stationary source* mean an emission source which is not self-propelled.

Storage tank or storage vessel means any stationary tank, reservoir or container used for the storage of VOL's.

Submerged loading pipe means any discharge pipe or nozzle which meets either of the following conditions:

(A) Where the tank is filled from the top, the end of the discharge pipe or nozzle must be totally submerged when the liquid level is 15 cm (6 in.) above the bottom of the tank.

(B) Where the tank is filled from the side, the discharge pipe or nozzle must be totally submerged when the liquid level is 46 cm (18 in.) above the bottom of the tank.

Substrate means the surface onto which a coating is applied or into which a coating is impregnated.

Surface condenser means a device which removes a substance from a gas stream by reducing the temperature of the stream, without direct contact between the coolant and the stream.

Tablet coating operation means a pharmaceutical coating operation in which tablets are coated.

Thirty-day rolling average means any value arithmetically averaged over any consecutive thirty-days.

Three-piece can means a can which is made from a rectangular sheet and two circular ends.

Topcoat means a coating applied in a multiple coat operation other than prime coat, final repair coat, or prime surfacer coat.

Topcoat operation means all topcoat spray booths, flash-off areas, and bake ovens at a facility which are used to apply, dry, or cure the final coatings (except final off-line repair) on components of automobile or light-duty truck bodies.

Transfer efficiency means the ratio of the amount of coating solids deposited onto a part or product to the total amount of coating solids used.

True vapor pressure means the equilibrium partial pressure exerted by a volatile organic liquid as determined in accordance with methods described in American Petroleum Institute Bulletin 2517, ''Evaporation Loss From Floating Roof Tanks,'' second edition, February 1980 (incorporated by reference as specified in 40 CFR 52.742).

Two-piece can means a can which is drawn from a shallow cup and requires only one end to be attached.

Undercoaters means any coatings formulated for and applied to substrates

to provide a smooth surface for subsequent coats.

Unregulated safety relief valve means a safety relief valve which cannot be actuated by a means other than high pressure in the pipe or vessel which it protects.

Vacuum producing system means any reciprocating, rotary, or centrifugal blower or compressor or any jet ejector or device that creates suction from a pressure below atmospheric and discharges against a greater pressure.

Valves not externally regulated means valves that have no external controls, such as in-line check valves.

Vapor balance system means any combination of pipes or hoses which creates a closed system between the vapor spaces of an unloading tank and a receiving tank such that vapors displaced from the receiving tank are transferred to the tank being unloaded.

Vapor collection system means all piping, seals, hoses, connections, pressure-vacuum vents, and other possible sources between the gasoline delivery vessel and the vapor processing unit and/or the storage tanks and vapor holder.

Vapor control system means any system that limits or prevents release to the atmosphere of organic material in the vapors displaced from a tank during the transfer of gasoline.

Vapor recovery system means a vapor gathering system capable of collecting all VOM vapors and gases discharged from the storage tank and a vapor disposal system capable of processing such VOM vapors and gases so as to prevent their emission to the atmosphere.

Vehicle means a device by which any person or property may be propelled, moved, or drawn upon a highway, excepting a device moved exclusively by human power or used exclusively upon stationary rails or tracks.

Vinyl coating means any topcoat or printing ink applied to vinyl coated fabric or vinyl sheets. Vinyl coating does not include plastisols.

Vinyl coating facility means a facility that includes one or more vinyl coating line(s).

Vinyl coating line means a coating line in which any protective, decorative or functional coating is applied onto vinyl coated fabric or vinyl sheets.

Volatile organic liquid means any substance which is liquid at storage conditions and which contains volatile organic compounds.

Volatile organic material (VOM) or volatile organic compounds (VOC) is as defined in § 51.100(s) of this chapter.

Wash coat means a coating containing binders which seals wood surfaces, prevents undesired staining, and controls penetration.

Web means a substrate which is printed in continuous roll-fed presses.

Wood furniture means room furnishings including cabinets (kitchen, bath, and vanity), tables, chairs, beds, sofas, shutters, art objects, wood paneling, wood flooring, and any other coated furnishings made of wood, wood composition, or fabricated wood materials.

Wood furniture coating facility means a facility that includes one or more wood furniture coating line(s).

Wood furniture coating line means a coating line in which any protective, decorative, or functional coating is applied onto wood furniture.

Woodworking means the shaping, sawing, grinding, smoothing, polishing, and making into products of any form or shape of wood.

(4) *Testing methods and procedures*—(i) Coatings, inks and fountain solutions. The following test methods and procedures shall be used to determine compliance of as applied coatings, inks, and fountain solutions with the limitations set forth in § 52.741.

(A) *Sampling*. Samples collected for analyses shall be one-liter taken into a one-liter container at a location and time such that the sample will be representative of the coating as applied (i.e., the sample shall include any dilution solvent or other VOM added during the manufacturing process). The container must be tightly sealed immediately after the sample is taken. Any solvent or other VOM added after the sample is taken must be measured and accounted for in the calculations in paragraph (a)(4)(i)(C) of this section. For multiple package coatings, separate samples of each component shall be obtained. A mixed sample shall not

be obtained as it will cure in the container. Sampling procedures shall follow the guidelines presented in:

(*1*) ASTM D3925–81 (Reapproved 1985) Standard Practice for Sampling Liquid Paints and Related Pigment Coating. This practice is incorporated by reference as specified in 40 CFR 52.742.

(*2*) ASTM E300–86 Standard Practice for Sampling Industrial Chemicals. This practice is incorporated by reference as specified in 40 CFR 52.742.

(B) *Analyses*. The applicable analytical methods specified below shall be used to determine the composition of coatings, inks, or fountain solutions as applied.

(*1*) Method 24 of 40 CFR part 60, appendix A, shall be used to determine the VOM content and density of coatings. If it is demonstrated to the satisfaction of the Administrator that plant coating formulation data are equivalent to Method 24 results, formulation data may be used. In the event of any inconsistency between a Method 24 test and a facility's formulation data, the Method 24 test will govern.

(*2*) Method 24A of 40 CFR part 60, appendix A, shall be used to determine the VOM content and density of rotogravure printing inks and related coatings. If it is demonstrated to the satisfaction of the Administrator that the plant coating formulation data are equivalent to Method 24A results, formulation data may be used. In the event of any inconsistency between a Method 24A test and a facility's formulation data, the Method 24A test will govern.

(*3*) The following ASTM methods are the analytical procedures for determining VOM:

(*i*) ASTM D1475–85: Standard Test Method for Density of Paint, Varnish, Lacquer and Related Products. This test method is incorporated by reference as specified in 40 CFR 52.742.

(*ii*) ASTM D2369–87: Standard Test Method for Volatile Content of Coatings. This test method is incorporated by reference as specified in 40 CFR 52.742.

(*iii*) ASTM D3792–86: Standard Test Method for Water Content of Water-reducible Paints by Direct Injection into a Gas Chromatograph. This test method is incorporated by reference as specified in 40 CFR 52.742.

(*iv*) ASTM D4017–81 (Reapproved 1987): Standard Test Method for Water in Paints and Paint Materials by the Karl Fischer Method. This test method is incorporated by reference as specified in 40 CFR 52.742.

(*v*) ASTM D4457–85: Standard Test Method for Determination of Dichloromethane and 1,1,1-Trichloroethane in Paints and Coatings by Direct Injection into a Gas Chromatograph. (The procedure delineated above can be used to develop protocols for any compounds specifically exempted from the definition of VOM.) This test method is incorporated by reference as specified in 40 CFR 52.742.

(*vi*) ASTM D2697–86: Standard Test Method for Volume Non-Volatile Matter in Clear or Pigmented Coatings. This test method is incorporated by reference as specified in 40 CFR 52.742.

(*vii*) ASTM D3980–87: Standard Practice for Interlaboratory Testing of Paint and Related Materials. This practice is incorporated by reference as specified in 40 CFR 52.742.

(*viii*) ASTM E180–85: Standard Practice for Determining the Precision of ASTM Methods for Analysis of and Testing of Industrial Chemicals. This practice is incorporated by reference as specified in 40 CFR 52.742.

(*ix*) ASTM D2372–85: Standard Method of Separation of Vehicle from Solvent-reducible Paints. This method is incorporated by reference as specified in 40 CFR 52.742.

(*4*) Use of an adaptation to any of the analytical methods specified in paragraphs (a)(4)(i)(B)(*1*), (*2*) and (*3*) may be approved by the Administrator on a case-by-case basis. An owner or operator must submit sufficient documentation for the Administrator to find that the analytical methods specified in paragraphs (a)(4)(i)(B)(*1*), (*2*) and (*3*) will yield inaccurate results and that the proposed adaptation is appropriate.

(C) *Calculations*. Calculations for determining the VOM content, water content and the content of any compounds which are specifically exempted from the definition of VOM of coatings, inks and fountain solutions as applied shall

follow the guidance provided in the following documents.

(*1*) ''A Guide for Surface Coating Calculation'' EPA–340/1–86–016 (which is available from the National Technical Information Services, 5285 Port Royal Road, Springfield, VA 22161)

(*2*) ''Procedures for Certifying Quantity of Volatile Organic Compounds Emitted by Paint, Ink and Other Coatings'' (revised June 1986) EPA–450/3–84–019 (which is available from the National Technical Information Services, 5285 Port Royal Road, Springfield, VA 22161)

(*3*) ''A Guide for Graphic Arts Calculations'' August 1988 EPA–340/1–88–003 (which is available from the National Technical Information Services, 5285 Port Royal Road, Springfield, VA 22161)

(ii) *Automobile or light-duty truck test protocol.* The protocol for testing, including determining the transfer efficiency, of coating applicators at topcoat coating operations at an automobile assembly facility shall follow the procedure in: ''Protocol for Determining the Daily Volatile Organic Compound Emission Rate of Automobile and Light-Duty Truck Topcoat Operations'' December 1988 EPA–450/3–88–018 (which is available for purchase from the National Technical Information Services, 5285 Port Royal Road, Springfield, VA 22161)

(iii) *Capture system efficiency test protocols*—(A) *Applicability.* The requirements of paragraphs (a)(4)(iii)(B) of this section shall apply to all VOM emitting processes employing capture equipment (*e.g.*, hoods, ducts), except those cases noted below.

(*1*) If a source installs a permanent total enclosure (PTE) that meets USEPA specifications, and which directs all VOM to a control device, then the source is exempted from the requirements described in paragraph (B). The USEPA specifications to determine whether a structure is considered a PTE are given in Procedure T of appendix B of this section. In this instance, the capture efficiency is assumed to be 100 percent and the source is still required to measure control efficiency using appropriate test methods as specified in (a)(4)(iv) of this section.

(*2*) If a source uses a control device designed to collect and recover VOM (*e.g.*, carbon adsorber), an explicit measurement of capture efficiency is not necessary provided that the conditions given below are met. The overall control of the system can be determined by directly comparing the input liquid VOM to the recovered liquid VOM. The general procedure for use in this situation is given in 40 CFR 60.433, with the following additional restrictions:

(*i*) The source must be able to equate solvent usage with solvent recovery on a 24-hour (daily) basis, rather than a 30-day weighted average, within 72 hours following the 24-hour period. In addition, one of the following two criteria must be met:

(*ii*) The solvent recovery system (i.e., capture and control system) must be dedicated to a single process line (*e.g.*, one process line venting to a carbon adsorber system), or

(*iii*) If the solvent recovery system controls multiple process lines, then the source must be able to demonstrate that the overall control (*i.e.*, the total recovered solvent VOM divided by the sum of liquid VOM input to all process lines venting to the control system) meets or exceeds the most stringent standard applicable for any process line venting to the control system.

(B) *Specific requirements.* The capture efficiency of a process line shall be measured using one of the four protocols given below. Any error margin associated with a test protocol may not be incorporated into the results of a capture efficiency test. If these techniques are not suitable for a particular process, then the source must present an alternative capture efficiency protocol and obtain approval for it by the Administrator as a SIP or FIP revisions.

(*1*) Gas/gas method using temporary total enclosure (TTE). The USEPA specifications to determine whether a temporary enclosure is considered a TTE are given in Procedure T of appendix B of this section. The capture efficiency equation to be used for this protocol is:

$$CE = Gw / (GW + Fw)$$

Where:

CE = capture efficiency, decimal fraction.
Gw = mass of VOM captured and delivered to control device using a TTE.
Fw = mass of fugitive VOM that escapes from a TTE.

Procedure G.2 contained in appendix B of this section is used to obtain Gw. Procedure F.1 in appendix B of this section is used to obtain Fw.

(*2*) *Liquid/gas method using TTE.* The USEPA specifications to determine whether a temporary enclosure is considered a TTE are given in Procedure T of appendix B of this section. The capture efficiency equation to be used for this protocol is:

$$CE = (L - F) / L$$

Where:

CE = capture efficiency, decimal fraction.
L = mass of liquid VOM input to process.
Fw = mass of fugitive VOM that escapes from a TTE.

Procedure L contained in appendix B of this section is used to obtain L. Procedure F.1 in appendix B of this section is used to obtain Fw.

(*3*) Gas/gas method using the building or room (building or room enclosure) in which the affected source is located as the enclosure and in which ''F'' and ''G'' are measured while operating only the affected facility. All fans and blowers in the building or room must be operated as they would under normal production. The capture efficiency equation to be used for this protocol is:

$$CE = G / (G + F_B)$$

Where:

CE = capture efficiency, decimal fraction.
G = mass of VOM captured and delivered to control device.
F_B = mass of fugitive VOM that escapes from building enclosure.

Procedure G.2 contained in appendix B of this section is used to obtain G. Procedure F.2 in appendix B of this section is used to obtain F_B.

(*4*) Liquid/gas method using the building or room (building or room enclosure) in which the affected source is located as the enclosure and in which ''F'' and ''L'' are measured while operating only the affected facility. All fans and blowers in the building or room must be operated as they would under normal production. The capture efficiency equation to be used for this protocol is:

$$CE = (L - F_B) / L$$

Where:

CE = capture efficiency, decimal fraction.
L = mass of liquid VOM input to process.
F_B = mass of fugitive VOM that escapes from building enclosure.

Procedure L contained in appendix B of this section is used to obtain L. Procedure F.2 in appendix B of this section is used to obtain F_B.

(C) *Recordkeeping and reporting.* (*1*) All affected facilities must maintain a copy of the capture efficiency protocol submitted to USEPA on file. All results of the appropriate test methods and capture efficiency protocols must be reported to USEPA within sixty (60) days of the test date. A copy of the results must be kept on file with the source for a period of three (3) years.

(*2*) If any changes are made to capture or control equipment, then the source is required to notify USEPA of these changes and a new test may be required by USEPA.

(*3*) The source must notify the Administrator 30 days prior to performing any capture efficiency or control test. At that time, the source must notify the Administrator which capture efficiency protocol and control device test methods will be used.

(*4*) Sources utilizing a PTE must demonstrate that this enclosure meets the requirement given in Procedure T (in appendix B of this section) for a PTE during any testing of their control device.

(*5*) Sources utilizing a TTE must demonstrate that their TTE meets the requirements given in Procedure T (in appendix B of this section) for a TTE during testing of their control device. The source must also provide documentation that the quality assurance criteria for a TTE have been achieved.

(iv) *Control device efficiency testing and monitoring.* (A) The control device efficiency shall be determined by simultaneously measuring the inlet and outlet gas phase VOM concentrations and gas volumetric flow rates in accordance with the gas phase test methods specified in paragraph (a)(4)(vi) of this section.

(B) Any owner or operator that uses an afterburner or carbon adsorber to comply with any paragraph of § 52.741 shall use USEPA approved continuous monitoring equipment which is installed, calibrated, maintained, and operated according to vendor specifications at all times the afterburner or carbon adsorber is in use. The continuous monitoring equipment must monitor the following parameters:

(*1*) Combustion chamber temperature of each afterburner.

(*2*) Temperature rise across each catalytic afterburner bed or VOM concentration of exhaust.

(*3*) The VOM concentration of each carbon adsorption bed exhaust.

(v) *Overall efficiency*. (A) The overall efficiency of the emission control system shall be determined as the product of the capture system efficiency and the control device efficiency or by the liquid/liquid test protocol as specified in 40 CFR 60.433 (and revised by paragraph (a)(4)(iii)(A)(*2*) of this section for each solvent recovery system. In those cases in which the overall efficiency is being determined for an entire line, the capture efficiency used to calculate the product of the capture and control efficiency is the total capture efficiency over the entire line.

(B) For coating lines which are both chosen by the owner or operator to comply with paragraphs (e)(2)(ii), (e)(2)(iii), (e)(2)(iv), (e)(2)(v), or (e)(2)(vi) of this section by the alternative in paragraph (e)(2)(i)(B) of this section and meet the criteria allowing them to comply with paragraph (e)(2) of this section instead of paragraph (e)(1) of this section, the overall efficiency of the capture system and control device, as determined by the test methods and procedures specified in paragraphs (a)(4) (iii), (iv) and (v)(A) of this section, shall be no less than the equivalent overall efficiency which shall be calculated by the following equation:

$$E = ([VOM_a - VOM_l]/VOM_a) \times 100$$

Where:

E = Equivalent overall efficiency of the capture system and control device as a percentage,

VOM_a = Actual VOM content of a coating, or the daily-weighted average VOM content of two or more coatings (if more than one coating is used), as applied to the subject coating line as determined by the applicable test methods and procedures specified in paragraph (a)(4)(i) of this section in units of kg VOM/l (lb VOM/gal) of coating solids as applied,

VOM_l = The VOM emission limit specified in paragraph (e)(2) (i) or (ii) of this section in units of kg VOM/l (lb VOM/gal) of coating solids as applied.

(vi) *Volatile organic material gas phase source test methods*. The methods in 40 CFR part 60, appendix A, delineated below shall be used to determine control device efficiencies.

(A) 40 CFR part 60, appendix A, Method 18, 25 or 25A, as appropriate to the conditions at the site, shall be used to determine VOM concentration. Method selection shall be based on consideration of the diversity of organic species present and their total concentration and on consideration of the potential presence of interfering gases. Except as indicated in paragraphs (a)(4)(vi)(A)(*1*) and (*2*) of this section, the test shall consist of three separate runs, each lasting a minimum of 60 min, unless the Administrator determines that process variables dictate shorter sampling times.

(*1*) When the method is to be used to determine the efficiency of a carbon adsoption system with a common exhaust stack for all the individual adsorber vessels, the test shall consist of three separate runs, each coinciding with one or more complete sequences through the adsorption cycles of all the individual adsorber vessels.

(*2*) When the method is to be used to determine the efficiency of a carbon adsorption system with individual exhaust stacks for each adsorber vessel, each adsorber vessel shall be tested individually. The test for each adsorber vessel shall consist of three separate runs. Each run shall coincide with one or more complete adsorption cycles.

(B) 40 CFR part 60, appendix A, Method 1 or 1A shall be used for sample and velocity traverses.

(C) 40 CFR part 60, appendix A, Method 2, 2A, 2C or 2D shall be used for velocity and volumetric flow rates.

(D) 40 CFR part 60, appendix A, Method 3 shall be used for gas analysis.

(E) 40 CFR part 60, appendix A, Method 4 shall be used for stack gas moisture.

(F) 40 CFR part 60, appendix A, Methods 2, 2A, 2C, 2D, 3 and 4 shall be performed, as applicable, at least twice during each test run.

(G) Use of an adaptation to any of the test methods specified in paragraphs (a)(4)(vi) (A), (B), (C), (D), (E), and (F) of this section may be approved by the Administrator on a case-by-case basis. An owner or operator must submit sufficient documentation for the Administrator to find that the test methods specified in paragraphs (a)(4)(vi) (A), (B), (C), (D), (E), and (F) of this section will yield inaccurate results and that the proposed adaptation is appropriate.

(vii) *Leak detection methods for volatile organic material.* Owners or operators required by the various subparts of this regulation to carry out a leak detection monitoring program shall comply with the following requirements:

(A) *Leak detection monitoring.* (*1*) Monitoring shall comply with 40 CFR part 60, appendix A. Method 21.

(*2*) The detection instrument shall meet the performance criteria of Method 21.

(*3*) The instrument shall be calibrated before use on each day of its use by the methods specified in Method 21.

(*4*) Calibration gases shall be:

(*i*) Zero air (less than 10 ppm of hydrocarbon in air); and

(*ii*) A mixture of methane or n-hexane and air at a concentration of approximately, but no less than, 10,000 ppm methane or n-hexane.

(*5*) The instrument probe shall be traversed around all potential leak interfaces as close to the interface as possible as described in Method 21.

(*B*) When equipment is tested for compliance with no detectable emissions as required, the test shall comply with the following requirements:

(*1*) The requirements of paragraphs (a)(4) (vii)(A)(*1*) through (vii)(A)(*5*) of this section shall apply.

(*2*) The background level shall be determined as set forth in Method 21.

(*C*) Leak detection tests shall be performed consistent with:

(*1*) ''APTI Course SI 417 controlling Volatile Organic Compound Emissions from Leaking Process Equipment'' EPA–450/2–82–015 (which is available for purchase from the National Technical Information Services, 5285 Port Royal Road, Springfield, VA 22161)

(*2*) ''Portable Instrument User's Manual for Monitoring VOC Sources'' EPA–340/1–86–015 (which is available for purchase from the National Technical Information Services, 5285 Port Royal Road, Springfield, VA 22161)

(*3*) ''Protocols for Generating Unit-Specific Emission Estimates for Equipment Leaks of VOC and VHAP'' EPA–450/3–88–010 (which is available for purchase from the National Technical Information Services, 5285 Port Royal Road, Springfield, VA 22161)

(*4*) ''Petroleum Refinery Enforcement Manual'' EPA–340/1–80–008 (which is available for purchase from the National Technical Information Services, 5285 Port Royal Road, Springfield, VA 22161)

(viii) *Bulk gasoline delivery system test protocol.* (A) The method for determining the emissions of gasoline from a vapor recovery system are delineated in 40 CFR part 60, subpart XX, § 60.503.

(B) Other tests shall be performed consistent with:

(*1*) ''Inspection Manual for Control of Volatile Organic Emissions from Gasoline Marketing Operations: Appendix D'' EPA–340/1–80–012 (which is available for purchase from the National Technical Information Services, 5285 Port Royal Road, Springfield, VA 22161)

(*2*) ''Control of Hydrocarbons from Tank Truck Gasoline Loading Terminals: Appendix A'' EPA–450/2–77–026 (which is available for purchase from the National Technical Information Services, 5285 Port Royal Road, Springfield, VA 22161)

(5) *Compliance dates.* Compliance with the requirements of all rules is required by July 1, 1991, unless otherwise indicated by compliance dates contained in specific rules. This paragraph shall not operate to provide additional time for compliance under section 113(d) of the Act, 42 U.S.C. 7413(d), for sources subject to compliance upon promulgation.

(6) *Afterburners.* The operation of any natural gas fired afterburner and capture system used to comply with § 52.741 is not required during the period of November 1 of any year to April 1 of the following year provided that

the operation of such devices is not required for purposes of occupational safety or health, or for the control of toxic substances, odor nuisances, or other regulated pollutants.

(7) *Exemptions, variances, and alternative means of control or compliance determinations.* Notwithstanding the provisions of any other paragraphs of this section, any exemptions, variances or alternatives to the control requirements, emission limitations, or test methods in the Illinois SIP or FIP can only be allowed if approved by the Administrator as a SIP or FIP revision.

(8) *Vapor pressure of volatile organic liquids.* (i) If the VOL consists of only a single compound, the vapor pressure shall be determined by ASTM Method D2879–86 (incorporated by reference as specified in 40 CFR 52.742) or the vapor pressure may be obtained from a published source such as: Boublik, T., V. Fried and E. Hala, ''The Vapor Pressure of Pure Substances,'' Elsevier Scientific Publishing Co., New York (1973); Perry's Chemical Engineer's Handbook, McGraw-Hill Book Company (1984); CRC Handbook of Chemistry and Physics, Chemical Rubber Publishing Company (1986–87); and Lange's Handbook of Chemistry, John A. Dean, editor, McGraw-Hill Book Company (1985).

(ii) If the VOL is a mixture, the vapor pressure shall be determined by ASTM Method D2879–86 (incorporated by reference as specified in 40 CFR 52.742) or by the following equation:

$$P_{vol} = \sum_{i=1}^{n} P_i X_i$$

Where:

P_{vol} = Total vapor pressure of the mixture,
n = Number of components in the mixture,
i = Subscript denoting an individual component,
P_i = Vapor pressure of a component determined in accordance with paragraph (a) of this section
X_i = Mole fraction of the component in the total mixture.

(9) *Vapor pressure of organic material or solvent.* (i) If the organic material or solvent consists of only a single compound, the vapor pressure shall be determined by ASTM Method D2879–86 (incorporated by reference as specified in 40 CFR 52.742) or the vapor pressure may be obtained from a published source such as: Boublik, T., V. Fried and E. Hala, ''The Vapor Pressure of Pure Substances,'' Elsevier Scientific Publishing Co., New York (1973); Perry's Chemical Engineer's Handbook, McGraw-Hill Book Company (1984); CRC Handbook of Chemistry and Physics, Chemical Rubber Publishing Company (1986–87); and Lange's Handbook of Chemistry, John A. Dean, editor, McGraw-Hill Book Company (1985).

(ii) If the organic material or solvent is in a mixture made up of both organic material compounds and compounds which are not organic material, the vapor pressure shall be determined by the following equation:

$$P_{om} = \frac{\sum_{i=1}^{n} P_i X_i}{\sum_{i=1}^{n} X_i}$$

Where:

P_{om} = Total vapor pressure of the portion of the mixture which is composed of organic material,
n = Number of organic material components in the mixture,
i = Subscript denoting an individual component,
P_i = Vapor pressure of an organic material component determined in accordance with paragraph (a) of this section,
X_i = Mole fraction of the organic material component of the total mixture.

(iii) If the organic material or solvent is in a mixture made up of only organic material compounds, the vapor pressure shall be determined by ASTM Method D2879–86 (incorporated by reference as specified in 40 CFR 52.742) or by the above equation.

(10) *Vapor pressure of volatile organic material.* (i) If the VOM consists of only a single compound, the vapor pressure shall be determined by ASTM Method D2879–86 (incorporated by reference as specified in 40 CFR 52.742) or the vapor pressure may be obtained from a published source such as: Boublik, T., V. Fried and E. Hala, ''The Vapor Pressure of Pure Substances,'' Elsevier Scientific Publishing Co., New York (1973); Perry's Chemical Engineer's Handbook, McGraw-Hill Book Company (1984);

CRC Handbook of Chemistry and Physics, Chemical Rubber Publishing Company (1986–87); and Lange's Handbook of Chemistry, John A. Dean, editor, McGraw-Hill Book Company (1985).

(ii) If the VOM is in a mixture made up of both VOM compounds and compounds which are not VOM, the vapor pressure shall be determined by the following equation:

$$P_{vom} = \frac{\sum_{i=1}^{n} P_i X_i}{\sum_{i=1}^{n} X_i}$$

Where:

P_{vom} = Total vapor pressure of the portion of the mixture which is composed of VOM,
n = Number of VOM components in the mixture,
i = Subscript denoting an individual component,
P_i = Vapor pressure of a VOM component determined in accordance with paragraph (a) of this section,
X_i = Mole fraction of the VOM component of the total mixture.

(iii) If the VOM is in a mixture made up of only VOM compounds, the vapor pressure shall be determined by ASTM Method D2879–86 (incorporated by reference as specified in 40 CFR 52.742) or by the above equation.

(b)–(c) [Reserved]

(d) *Solvent cleaning*—(1) *Solvent cleaning in general.* The requirements of subpart E (sections 215.182–215.184) of 35 Ill. Adm. Code 215 (incorporated by reference as specified in 40 CFR 52.742) shall apply to all cold cleaning, open top vapor degreasing, and conveyorized degreasing operations.

NOTE: For Federal purposes, paragraph (d)(1) supersedes subpart E (section 215.181) of 35 Ill. Adm. Code 215.)

(2) *Compliance schedule.* Every owner or operator of an emission source which was previously exempt from the requirements of subpart E (sections 215.182–215.184) of 35 Ill. Adm. Code 215 (incorporated by reference as specified in 40 CFR 52.742) because it satisfied the criteria in either (d)(a)(i) or (d)(2)(ii) of this section, shall comply with the requirements of subpart E (sections 215.182–215.184) of 35 Ill. Adm. Code 215 (incorporated by reference as specified in 40 CFR 52.742) on and after July 1, 1991. A source which did not satisfy the criteria in either (d)(a)(i) or (d)(2)(ii) of this section, shall comply with the requirements of subpart E (sections 215.182–215.184) of 35 Ill. Adm. Code 215 (incorporated by reference as specified in 40 CFR 52.742) upon promulgation.

(i) If emissions of VOM exceed neither 6.8 kg (15 lbs) in any one day, nor 1.4 kg (3 lbs) in any one hour, or

(ii) If the source is used exclusively for chemical or physical analysis or for determination of product quality and commercial acceptance, provided that the operation of the source is not an integral part of the production process, the emissions of VOM from the source do not exceed 363 kg (800 lbs) in any calendar month, and the exemption had been approved in writing by the Illinois Environmental Protection Agency.

(3) *Test methods.* The following test methods shall be used to demonstrate compliance with subpart E (sections 215.182–215.184) of 35 Ill. Adm. Code 215 (incorporated by reference as specified in 40 CFR 52.742):

(i) Vapor pressures shall be determined by using the procedure specified in paragraph (a)(9) of this section.

(ii) Exhaust ventilation rates shall be determined by using the procedures specified in paragraph (a)(4)(vi)(C) of this section.

(iii) The performance of control devices shall be determined by using the procedures specified in paragraph (a)(4)(vi) of this section.

(e) *Coating operations*—(1) *Emission limitations for manufacturing plants.* (i) Except as provided in paragraph (e)(3) of this section, no owner or operator of a coating line shall apply at any time any coating in which the VOM content exceeds the following emission limitations for the specified coating. The following emission limitations are expressed in units of VOM per volume of coating (minus water and any compounds which are specifically exempted from the definition of VOM) as applied at each coating applicator, except where noted. Compounds which are specifically exempted from the definition of VOM should be treated as water for

the purpose of calculating the ''less water'' part of the coating composition. Compliance with this paragraph must be demonstrated through the applicable coating analysis test methods and procedures specified in paragraph (a)(4)(i) of this section and the recordkeeping and reporting requirements specified in paragraph (e)(6)(ii) of this section. As an alternative to compliance with this paragraph, the owner or operator of a coating line may meet the requirements of paragraph (e)(1)(ii) or paragraph (e)(2) of this section. The equation presented in paragraph (e)(1)(iii) of this section shall be used to calculate emission limitations for determining compliance by add-on controls, credits for transfer efficiency, emissions trades and cross-line averaging.

	kg/l	lb/gal
(A) Automobile or Light-Duty Truck Coating		
(*1*) Prime coat	0.14	(1.2)
(*2*) Prime surfacer coat	0.34	(2.8)
NOTE: The prime surfacer coat limitation is based upon a transfer efficiency of 30 percent. Transfer efficiency credits can only be allowed if approved by the Administrator as a SIP or FIP revision.		
(*3*) Topcoat	1.81	(15.1)
NOTE: The topcoat limitation is in units of kg (lbs) of VOM per l (gal) of coating solids deposited. Compliance with the limitation shall be based on the daily-weighted average VOM content from the entire topcoat operation (all topcoat spray booths, flash-off areas and bake ovens). Compliance shall be demonstrated in accordance with the topcoat protocol for automobiles and light-duty trucks referenced in paragraph (a)(4)(ii) of this section. Paragraph (e)(1)(ii) of this section does not apply to the topcoat limitation.) At least 180 days prior to the initial compliance date, the owner or operator of a coating line subject to the topcoat limitation shall submit to the Administrator a detailed proposal specifying the method of demonstrating compliance with the protocol. The proposal shall include, at a minimum, a comprehensive plan (including a rationale) for determining the transfer efficiency at each booth through the use of in-plant, or pilot testing; the selection of coatings to be tested (for the purpose of determining transfer efficiency) including the rationale for coating groupings; and the method for determining the analytic VOM content of as applied coatings and the formulation solvent content of as applied coatings. Upon approval of the protocol by the Administrator, the source may proceed with the compliance demonstration.		
(*4*) Final repair coat	0.58	(4.8)
(B) Can Coating		
(*1*) Sheet basecoat and overvarnish	0.34	(2.8)
(*2*) Exterior basecoat and overvarnish	0.34	(2.8)
(*3*) Interior body spray coat	0.51	(4.2)
(*4*) Exterior end coat	0.51	(4.2)
(*5*) Side seam spray coat	0.66	(5.5)
(*6*) End sealing compound coat	0.44	(3.7)
(C) Paper Coating	0.35	(2.9)
NOTE: The paper coating limitation shall not apply to any owner or operator of any paper coating line on which printing is performed if the paper coating line complies with the emissions limitations in paragraph (h)(1) of this section: Printing and Publishing.		
(D) Coil Coating	0.31	(2.6)
(E) Fabric Coating	0.35	(2.9)
(F) Vinyl Coating	0.45	(3.8)
(G) Metal Furniture Coating	0.36	(3.0)
(H) Large Appliance Coating	0.34	(2.8)
NOTE: The limitation shall not apply to the use of quick-drying lacquers for repair of scratches and nicks that occur during assembly, provided that the volume of coating does not exceed 0.95 l (1 quart) in any one rolling eight-hour period.		
(I) Magnet Wire Coating	0.20	(1.7)
(J) Miscellaneous Metal Parts and Products Coating		
(*1*) Clear coating	0.52	(4.3)
(*2*) Air-dried coating	0.42	(3.5)
(*3*) Extreme performance coating	0.42	(3.5)
(*4*) Steel pail and drum interior coating	0.52	(4.3)
(*5*) All other coatings	0.36	(3.0)

	kg/l	lb/gal
(K) Heavy Off-Highway Vehicle Products Coating		
(*1*) Extreme performance prime coat	0.42	(3.5)
(*2*) Extreme performance top-coat (air dried)	0.42	(3.5)
(*3*) Final repair coat (air dried)	0.42	(3.5)
(*4*) All other coatings are subject to the emission limitations for miscellaneous metal parts and products coatings in paragraph (e)(1)(i)(J) of this section.		
(L) Wood Furniture Coating		
(*1*) Clear topcoat	0.67	(5.6)
(*2*) Opaque stain	0.56	(4.7)

	kg/l	lb/gal
(*3*) Pigmented coat	0.60	(5.0)
(*4*) Repair coat	0.67	(5.6)
(*5*) Sealer	0.67	(5.6)
(*6*) Semi-transparent stain	0.79	(6.6)
(*7*) Wash coat	0.73	(6.1)
NOTE: An owner or operator of a wood furniture coating operation subject to this paragraph shall apply all coatings, with the exception of no more than 37.8 l (10 gal) of coating per day used for touch-up and repair operations, using one or more of the following application systems: airless spray application system, air-assisted airless spray application system, electrostatic spray application system, electrostatic bell or disc spray application system, heated airless spray application system, roller coating, brush or wipe coating application system, or dip coating application system.		
(M) Existing Diesel-Electric Locomotive Coating Lines in Cook County		
(*1*) Extreme performance prime coat	0.42	(3.5)
(*2*) Extreme performance top-coat (air dried)	0.42	(3.5)
(*3*) Final repair coat (air dried)	0.42	(3.5)
(*4*) High-temperature aluminum coating	0.72	(6.0)
(*5*) All other coatings	0.36	(3.0)

(ii) *Daily-weighted average limitations.* No owner or operator of a coating line subject to the limitations of paragraph (e)(1)(i) of this section and complying by means of paragraph (e)(1)(ii) of this section shall operate the subject coating line unless the owner or operator has demonstrated compliance with paragraph (e)(1) (ii)(A), (ii)(B), (ii)(C), (ii)(D), (ii)(E) or (ii)(F) of this section (depending upon the source category) through the applicable coating analysis test methods and procedures specified in paragraph (a)(4)(i) of this section and the recordkeeping and reporting requirements specified in paragraph (e)(6)(iii) of this section.

(A) No owner or operator of a coating line subject to only one of the limitations from among paragraph (e)(1)(i)(A)(*1*), (i)(A)(*2*), (i)(A)(*4*), (i)(C), (i)(D), (i)(E), (i)(F), (i)(G), (i)(H), or (i)(I) of this section shall apply coating on any such coating line, during any day, whose daily-weighted average VOM content exceeds the emission limitation to which the coatings are subject.

(B) No owner or operator of a miscellaneous metal parts and products coating line subject to the limitations of paragraph (e)(1)(i)(J) of this section shall apply coatings to miscellaneous metal parts or products on the subject coating line unless the requirements in paragraph (e)(1)(ii)(B) (*1*) or (*2*) of this section are met.

(*1*) For each coating line which applies multiple coatings, all of which are subject to the same numerical emission limitation within paragraph (e)(1)(i)(J) of this section, during the same day (*e.g.*, all coatings used on the line are subject to 0.42 kg/l [3.5 lbs/gal]), the daily-weighted average VOM content shall not exceed the coating VOM content limit corresponding to the category of coating used, or

(*2*) For each coating line which applies coatings from more than one of the four coating categories in paragraph (e)(1)(i)(J) of this section, during the same day, the owner or operator shall submit to and receive approval from the Administrator for a site-specific FIP revision. To receive approval, the requirements of USEPA's Emissions Trading Policy Statement (and related policy) must be satisfied.

(C) No owner or operator of a can coating facility subject to the limitations of paragraph (e)(1)(i)(B) of this section shall operate the subject coating facility using a coating with a VOM content in excess of the limitations specified in paragraph (e)(1)(i)(B) of this section unless all of the following requirements are met:

(*1*) An alternative daily emission limitation shall be determined according to paragraph (e)(1)(ii)(C)(*2*) of this section. Actual daily emissions shall never exceed the alternative daily emission limitation and shall be calculated by use of the following equation.

$$E_d = \sum_{i=1}^{n} V_i C_i$$

Where:

E_d = Actual VOM emissions for the day in units of kg/day (lbs/day),

i = Subscript denoting a specific coating applied,

n = Total number of coatings applied in the can coating operation,

V_i = Volume of each coating applied for the day in units of l/day (gal/day) of coating (minus water and any compounds which are specifically exempted from the definition of VOM), and

C_i = The VOM content of each coating as applied in units of kg VOM/l (lbs VOM/gal) of coating (minus water and any compounds which are specifically exempted from the definition of VOM).

(*2*) The alternative daily emission limitation (A_d) shall be determined on a daily basis as follows:

$$A_d = \sum_{i=1}^{n} \frac{V_i L_i \left(D_i - C_i\right)}{\left(D_i - L_i\right)}$$

Where:

A_d = The VOM emissions allowed for the day in units of kg/day (lbs/day),

i = Subscript denoting a specific coating applied,

n = Total number of surface coatings applied in the can coating operation,

C_i = The VOM content of each surface coating as applied in units of kg VOM/l (lbs VOM/gal) of coating (minus water and any compounds which are specifically exempted from the definition of VOM),

D_i = The density of VOM in each coating applied. For the purposes of calculating A_d, the density is 0.882 kg VOM/l VOM (7.36 lbs VOM/gal VOM),

V_i = Volume of each surface coating applied for the day in units of l (gal) of coating (minus water and any compounds which are specifically exempted from the definition of VOM),

L_i = The VOM emission limitation for each surface coating applied as specified in paragraph (e)(1)(i)(B) of this section in units of kg VOM/l (lbs VOM/gal) of coating (minus water and any compounds which are specifically exempted from the definition of VOM).

(D) No owner or operator of a heavy off-highway vehicle products coating line subject to the limitations of paragraph (e)(1)(i)(K) of this section shall apply coatings to heavy off-highway vehicle products on the subject coating line unless the requirements of paragraph (e)(1)(ii)(D) (*1*) or (*2*) of this section are met.

(*1*) For each coating line which applies multiple coatings, all of which are subject to the same numerical emission limitation within paragraph (e)(1)(i)(K) of this section, during the same day (*e.g.*, all coatings used on the line are subject to 0.42 kg/l [3.5 lbs/gal]), the daily-weighted average VOM content shall not exceed the coating VOM content limit corresponding to the category of coating used, or

(*2*) For each coating line which applies coatings subject to more than one numerical emission limitation in paragraph (e)(1)(i)(K) of this section, during the same day, the owner or operator shall submit to and receive approval from the Administrator for a site-specific FIP revision. To receive approval, the requirements of USEPA's Emissions Trading Policy Statement (and related policy) must be satisfied.

(E) No owner or operator of a wood furniture coating line subject to the limitations of paragraph (e)(1)(i)(L) of this section shall apply coatings to wood furniture on the subject coating line unless the requirements of paragraph (e)(1)(ii)(E) (*1*) or (*2*) of this section, in addition to the requirements specified in the note to paragraph (e)(1)(i)(L) of this section, are met.

(*1*) For each coating line which applies multiple coatings, all of which are subject to the same numerical emission limitation within paragraph (e)(1)(i)(L) of this section, during the same day (e.g., all coatings used on the line are subject to 0.67 kg/l [5.6 lbs/gal]), the daily-weighted average VOM content shall not exceed the coating VOM content limit corresponding to the category of coating used, or

(*2*) For each coating line which applies coatings subject to more than one numerical emission limitation in paragraph (e)(1)(i)(L) of this section, during the same day, the owner or operator shall submit to and receive approval from the Administrator for a site-specific FIP revision. To receive approval, the requirements of USEPA's Emissions Trading Policy Statement (and related policy) must be satisfied.

(F) No owner or operator of an existing diesel-electric locomotive coating line in Cook County, subject to the limitations of paragraph (e)(1)(i)(M) of this section shall apply coatings to diesel-electric locomotives on the subject coating line unless the requirements of paragraph (e)(1)(ii)(F) (*1*) or (*2*) of this section are met.

(*1*) For each coating line which applies multiple coatings, all of which

are subject to the same numerical emission limitation within paragraph (e)(1)(i)(M) of this section, during the same day (e.g., all coatings used on the line are subject to 0.42 kg/l [3.5 lbs/gal]), the daily-weighted average VOM content shall not exceed the coating VOM content limit corresponding to the category of coating used, or

(*2*) For each coating line which applies coatings subject to more than one numerical emission limitation in paragraph (e)(1)(i)(M) of this section, during the same day, the owner or operator shall submit to and receive approval from the Administrator for a site-specific FIP revision. To receive approval, the requirements of USEPA's Emissions Trading Policy Statement (and related policy) must be satisfied.

(iii) Limitations in terms of kg (lbs) of VOM emissions per l (gal) of solids as applied at each coating applicator shall be determined by the following equation:

$$S = \frac{C}{1 - \left(\frac{C}{D}\right)}$$

Where:

S = The limitation on VOM emissions in terms of kg VOM/l (lbs VOM/gal) of solids,

C = The limitation on VOM emissions in terms of kg/l (lbs/gal) of coating (minus water and any compounds which are specifically excluded from the definition of VOM) specified in paragraph (e)(1)(i) of this section,

D = The density of VOM in the coating. For the purposes of calculating S, the density is 0.882 kg VOM/l VOM (7.36 lbs VOM/gal VOM).

(2) *Alternative emission limitations.* Any owner or operator of a coating line subject to paragraph (e)(1) of this section may comply with this paragraph, rather than with paragraph (e)(1) of this section, if a capture system and control device are operated at all times and the owner or operator demonstrates compliance with paragraphs (e)(2) (ii), (iii), (iv), (v), (vi) or (vii) of this section (depending upon the source category) through the applicable coating analysis and capture system and control device efficiency test methods and procedures specified in paragraph (a)(4) of this section and the recordkeeping and reporting requirements specified in paragraph (e)(6)(iv) of this section; and the control device is equipped with the applicable monitoring equipment specified in paragraph (a)(4)(iv) of this section and the monitoring equipment is installed, calibrated, operated and maintained according to vendor specifications at all times the control device is in use. The use of a capture system and control device, which does not demonstrate compliance with paragraph (e)(2) (ii), (iii), (iv), (v), (vi), or (vii), may only be used as an alternative to compliance with paragraph (e)(1) of this section if approved as a FIP revision.

(i) *Alternative add-on control methodologies.* (A) The coating line is equipped with a capture system and control device that provides 81 percent reduction in the overall emissions of VOM from the coating line and the control device has a 90 percent efficiency, or

(B) The system used to control VOM from the coating line is demonstrated to have an overall efficiency sufficient to limit VOM emissions to no more than what is allowed under paragraph (e)(1) of this section. Use of any control system other than an afterburner, carbon absorption, condensation, or absorption scrubber system can only be allowed if approved by the Administrator as a SIP or FIP revision. Transfer efficiency credits can only be allowed if approved by the Administrator as a SIP or FIP revision. Baseline transfer efficiencies and transfer efficiency test methods must be approved by the Administrator.

Such overall efficiency is to be determined as follows:

(*1*) Obtain the emission limitation from the appropriate paragraph in (e)(1) of this section,

(*2*) Calculate ''S'' according to the equation in paragraph (e)(1)(iii) of this section,

(*3*) Calculate the overall efficiency required according to paragraph (a)(4)(v) of this section. For the purposes of calculating this value, according to the equation in (a)(4)(v)(B) of this section VOM_I is equal to the value of ''S'' as determined above in (i)(B)(*2*).

(ii) No owner or operator of a coating line subject to only one of the emission limitations from among paragraph (e)(1)(i)(A)(*1*), (e)(1)(i)(A)(*2*), (e)(1)(i)(A)(*4*), (e)(1)(i)(C), (e)(1)(i)(D), (e)(1)(i)(E), (e)(1)(i)(F), (e)(1)(i)(G), (e)(1)(i)(H), or (e)(1)(i)(I) of this section and equipped with a capture system and control device shall operate the subject coating line unless the requirements in paragraph (e)(2)(i) (A) or (B) of this section are met. No owner or operator of a coating line subject to paragraph (e)(1)(i)(A)(*3*) of this section and equipped with a capture system and control device shall operate the coating line unless the owner or operator demonstrates compliance with the topcoat limitation in accordance with the topcoat protocol for automobile or light-duty trucks referenced in paragraph (a)(4)(ii) of this section.

(iii) No owner or operator of a miscellaneous metal parts and products coating line which applies one or more coatings during the same day, all of which are subject to the same numerical emission limitation within paragraph (e)(1)(i)(J) of this section (e.g., all coatings used on the line are subject to 0.42 kg/l [3.5 lbs/gal]), and which is equipped with a capture system and control device shall operate the subject coating line unless the requirements in paragraph (e)(2)(i) (A) or (B) of this section are met.

(iv) No owner or operator of a heavy off-highway vehicle products coating line which applies one or more coatings during the same day, all of which are subject to the same numerical emission limitation within paragraph (e)(1)(i)(K) of this section (e.g., all coatings used on the line are subject to 0.42 kg/l [3.5 lbs/gal]), and which is equipped with a capture system and control device shall operate the subject coating line unless the requirements in paragraph (e)(2)(i) (A) or (B) of this section are met.

(v) No owner or operator of an existing diesel-electric locomotive coating line in Cook County which applies one or more coatings during the same day, all of which are subject to the same numerical emission limitation within paragraph (e)(1)(i)(M) of this section (e.g., all coatings used on the line are subject to 0.42 kg/l [3.5 lbs/gals]), and which is equipped with a capture system and control device shall operate the subject coating line unless the requirements in paragraph (e)(2)(i) (A) or (B) of this section are met.

(vi) No owner or operator of a wood furniture coating line which applies one or more coatings during the same day, all of which are subject to the same numerical emission limitation within paragraph (e)(1)(i)(L) (*e.g.*, all coatings used on the line are subject to 0.67 kg/l [5.6 lbs/gal]), and which is equipped with a capture system and control device shall operate the subject coating line unless the requirements in paragraph (e)(2)(i) (A) or (B) of this section are met. If compliance is achieved by meeting the requirements in paragraph (e)(2)(i)(B) of this section, then the provisions in the note to paragraph (e)(1)(i)(L) of this section must also be met.

(vii) No owner or operator of a can coating facility and equipped with a capture system and control device shall operate the subject coating facility unless the requirements in paragraph (e)(2)(vii) (A) or (B) of this section are met.

(A) An alternative daily emission limitation shall be determined according to paragraph (e)(1)(ii)(C)(*2*) of this section. Actual daily emissions shall never exceed the alternative daily emission limitation and shall be calculated by use of the following equation:

$$E_d = \sum_{i=1}^{n} V_i C_i \left(1 - F_i\right)$$

Where:

E_d = Actual VOM emissions for the day in units of kg/day (lbs/day),

i = Subscript denoting the specific coating applied,

n = Total number of surface coatings as applied in the can coating operation,

V_i = Volume of each coating as applied for the day in units of l/day (gal/day) of coating (minus water and any compounds which are specifically exempted from the definition of VOM),

C_i = The VOM content of each coating as applied in units of kg VOM/l (lbs VOM/gal) of coating (minus water and any compounds which are specifically exempted from the definition of VOM), and

F_i = Fraction, by weight, of VOM emissions from the surface coating, reduced or prevented from being emitted to the ambient air. This is the overall efficiency of the capture system and control device.

(B) The coating line is equipped with a capture system and control device that provide 75 percent reduction in the overall emissions of VOM from the coating line and the control device has a 90 percent efficiency.

(3) *Exemptions from emission limitations*—(i) *Exemptions for all source categories except wood furniture coating.* The limitations of paragraph (e) of this section shall not apply to coating lines within a facility, that otherwise would be subject to the same subparagraph of paragraph (e)(1)(i) of this section (because they belong to the same source category, e.g. can coating), provided that combined actual emissions of VOM from all lines at the facility subject to that subparagraph never exceed 6.8 kg/day (15 lbs/day) before the application of capture systems and control devices. (For example, can coating lines within a plant would not be subject to the limitations of subparagraph (e)(1)(i)(B) of this section if the combined actual emissions of VOM from the can coating lines never exceed 6.8 kg/day (15 lbs/day) before the application of capture systems and control devices.) Volatile organic material emissions from heavy off-highway vehicle products coating lines must be combined with VOM emissions from miscellaneous metal parts and products coating lines to determine applicability. Any owner or operator of a coating facility shall comply with the applicable coating analysis test methods and procedures specified in paragraph (a)(4)(i) of this section and the recordkeeping and reporting requirements specified in paragraph (e)(6)(i) of this section if total VOM emissions from the subject coating lines are always less than or equal to 6.8 kg/day (15 lbs/day) before the application of capture systems and control devices and, therefore, are not subject to the limitations of paragraph (e)(1) of this section. Once a category of coating lines at a facility is subject to the limitations in paragraph (e)(1) of this section, the coating lines are always subject to the limitations in paragraph (e)(1) of this section.

(ii) *Applicability for wood furniture coating.* (A) The limitations of paragraph (e) of this section shall apply to a plant's wood furniture coating lines if the plant contains process emission sources, not regulated by paragraphs (d), (e) (excluding paragraph (e)(1)(i)(L)), (h) (excluding paragraph (h)(5)), (i), (j), or (q)(1), or subparts B, Q (excluding sections 215.432 and 215.436), R (excluding sections 215.447, 215.450, and 215.452), S, V, X, Y (sections 215.582–215.584), or Z of 35 Ill. Adm. Code 215 (incorporated by reference as specified in 40 CFR 52.742), which as a group both:

(*1*) Have maximum theoretical emissions of 91 Mg (100 tons) or more per calendar year of VOM if no air pollution control equipment were used, and

(*2*) Are not limited to less than 91 Mg (100 tons) of VOM per calendar year if no air pollution control equipment were used, through production or capacity limitations contained in a federally enforceable construction permit or SIP or FIP version.

(B) If a plant ceases to fulfill the criteria of paragraph (e)(3)(ii)(A) of this section, the limitations of paragraph (e)(1)(i)(L) of this section shall continue to apply to any wood furniture coating line which was ever subject to the limitations of paragraph (e)(1)(i)(L) of this section.

(C) For the purposes of paragraph (e)(3)(ii) of this section, an emission source shall be considered regulated by a subpart (of the Illinois rules), section, or paragraph if it is subject to the limitations of that subpart (of the Illinois rules), section, or paragraph. An emission source is not considered regulated by a subpart (of the Illinois rules), section, or paragraph if its emissions are below the applicability cutoff level or if the source is covered by an exemption.

(D) Any owner or operator of a wood furniture coating line to which the limitations of paragraph (e) of this section are not applicable due to the criteria in paragraph (e)(3)(ii) of this section shall, upon request by the Administrator, submit records to the Administrator within 30 calendar days from the date of the request that document that the coating line is exempt from the

limitations of paragraph (e) of this section.

(4) *Exemption from general rule on use of organic material.* No owner or operator of a coating line subject to the limitations of paragraph (e)(1) of this section is required to meet the limitations of subpart K (section 215.301 or 215.302) of 35 Ill. Adm. Code 215 (incorporated by reference as specified in 40 CFR 52.742), after the date by which the coating line is required to meet paragraph (e)(1) of this section.

(5) *Compliance schedule.* Except as specified in paragraph (e)(7) of this section, every owner or operator of a coating line (of a type included within paragraph (e)(1)(i) of this section) shall comply with the requirements of paragraph (e)(1),(e)(2) or (e)(3) of this section and paragraph (e)(6) of this section in accordance with the appropriate compliance schedule as specified in paragraph (e)(5)(i),(ii),(iii) or (iv) of this section.

(i) No owner or operator of a coating line which is exempt from the limitations of paragraph (e)(1) of this section because of the criteria in paragraph (e)(3)(i) of this section shall operate said coating line on or after July 1, 1991, unless the owner or operator has complied with, and continues to comply with, paragraph (e)(6)(i) of this section. Wood furniture coating lines are not subject to paragraph (e)(6)(i) of this section.

(ii) No owner or operator of a coating line complying by means of paragraph (e)(1)(i) of this section shall operate said coating line on or after July 1, 1991, unless the owner or operator has complied with, and continues to comply with, paragraphs (e)(1)(i) and (e)(6)(ii) of this section.

(iii) No owner or operator of a coating line complying by means of paragraph (e)(1)(ii) of this section shall operate said coating line on or after July 1, 1991, unless the owner or operator has complied with, and continues to comply with, paragraphs (e)(1)(ii) and (e)(6)(iii) of this section.

(iv) No owner or operator of a coating line complying by means of paragraph (e)(2) of this section shall operate said coating line on or after July 1, 1991, unless the owner or operator has complied with, and continues to comply with, paragraphs (e)(2) and (e)(6)(iv) of this section.

(6) *Recordkeeping and reporting.* The VOM content of each coating and the efficiency of each capture system and control device shall be determined by the applicable test methods and procedures specified in paragraph (a)(4) of this section to establish the records required under paragraph (e)(6) of this section.

(i) Any owner or operator of a coating line which is exempted from the limitations of paragraph (e)(1) of this section because of paragraph (e)(3)(i) of this section shall comply with the following:

(A) By July 1, 1991, the owner or operator of a facility referenced in paragraph (e)(6)(i) of this section shall certify to the Administrator that the facility is exempt under the provisions of paragraph (e)(3)(i) of this section. Such certification shall include:

(*1*) A declaration that the facility is exempt from the limitations of paragraph (e)(1) of this section because of paragraph (e)(3)(i) of this section; and

(*2*) Calculations which demonstrate that the combined VOM emissions from all coating lines at the facility never exceed 6.8 kg (15 lbs) per day before the application of capture systems and control devices. The following equation shall be used to calculate total VOM emissions:

$$T_e = \sum_{j=1}^{m} \sum_{i=1}^{n} \left(A_i B_i\right) j$$

Where:

T_e = Total VOM emissions from coating lines at a facility each day before the application of capture systems and control devices in units of kg/day (lbs/day),

m = Number of coating lines at the facility,

j = Subscript denoting an individual coating line,

n = Number of different coatings as applied each day on each coating line at the facility,

i = Subscript denoting an individual coating,

A_i = Weight of VOM per volume of each coating (minus water and any compounds which are specifically exempted from the definition of VOM) as applied each day on each coating line at the facility in units of kg VOM/l (lbs VOM/gal), and

B_i = Volume of each coating (minus water and any compounds which are specifically exempted from the definition of

VOM) as applied each day on each coating line at the facility in units of l/day (gal/day). The instrument or method by which the owner or operator accurately measured or calculated the volume of each coating as applied on each coating line each day shall be described in the certification to the Administrator.

(B) On and after July 1, 1991, the owner or operator of a facility referenced in paragraph (e)(6)(i) of this section shall collect and record all of the following information each day for each coating line and maintain the information at the facility for a period of three years:

(*1*) The name and identification number of each coating as applied on each coating line.

(*2*) The weight of VOM per volume and the volume of each coating (minus water and any compounds which are specifically exempted from the definition of VOM) as applied each day on each coating line.

(C) On and after July 1, 1991, the owner or operator of a facility exempted from the limitations of paragraph (e)(1) of this section because of paragraph (e)(3)(i) of this section shall notify the Administrator of any record showing that total VOM emissions from the coating facility exceed 6.8 kg (15 lbs) in any day before the application of capture systems and control devices shall be reported by sending a copy of such record to the Administrator within 30 days after the exceedance occurs.

(ii) Any owner or operator of a coating line subject to the limitations of paragraph (e)(1) of this section and complying by means of paragraph (e)(1)(i) of this section shall comply with the following:

(A) By July 1, 1991, or upon initial start-up of a new coating line, or upon changing the method of compliance from an existing subject coating line from paragraph (e)(1)(ii) or paragraph (e)(2) to paragraph (e)(1)(i) of this section; the owner or operator of a subject coating line shall certify to the Administrator that the coating line will be in compliance with paragraph (e)(1)(i) of this section on and after July 1, 1991, or on and after the initial start-up date. Such certification shall include:

(*1*) The name and identification number of each coating as applied on each coating line.

(*2*) The weight of VOM per volume of each coating (minus water and any compounds which are specifically exempted from the definition of VOM) as applied each day on each coating line.

(*3*) For coating lines subject to paragraph (e)(1)(i)(A)(*3*) of this section, certification shall include:

(*i*) The name and identification number of each coating line which will comply by means of paragraph (e)(1)(i)(A)(*3*) of this section,

(*ii*) The name and identification number of each coating as applied on each coating line,

(*iii*) The weight of VOM per volume of each coating as applied on each coating line,

(*iv*) The instrument or method by which the owner or operator will accurately measure or calculate the volume of each coating as applied each day on each coating line,

(*v*) The method by which the owner or operator will create and maintain records each day as required in paragraph (e)(6)(ii)(B) of this section for coating lines subject to paragraph (e)(1)(i)(A)(*3*) of this section,

(*vi*) An example format in which the records required in paragraph (e)(6)(ii)(B) of this section for coating lines subject to paragraph (e)(1)(i)(A)(*3*) of this section.

(B) On and after July 1, 1991, or on and after the initial start-up date, the owner or operator of a coating line subject to the limitations of paragraph (e)(1) of this section and complying by means of paragraph (e)(1)(i) of this section shall collect and record all of the following information each day for each coating line and maintain the information at the facility for a period of three years:

(*1*) The name and identification number of each coating as applied on each coating line.

(*2*) The weight of VOM per volume of each coating (minus water and any compounds which are specifically exempted from the definition of VOM) as applied each day on each coating line.

(*3*) For coating lines subject to paragraph (e)(1)(i)(A)(*3*) of this section, the owner or operator shall maintain all

records necessary to calculate the daily-weighted average VOM content from the coating line in accordance with the proposal submitted, and approved by the Administrator, pursuant to paragraph (e)(1)(A)(*3*) of this section.

(C) On and after July 1, 1991, the owner or operator of a subject coating line shall notify the Administrator in the following instances:

(*1*) Any record showing violation of paragraph (e)(1)(i) of this section shall be reported by sending a copy of such record to the Administrator within 30 days following the occurrence of the violation, except that any record showing a violation of paragraph (e)(1)(i)(A)(*3*) of this section shall be reported by sending a copy of such record to the Administrator within 15 days from the end of the month in which the violation occurred.

(*2*) At least 30 calendar days before changing the method of compliance with paragraph (e)(1) of this section from paragraph (e)(1)(i) to paragraph (e)(1)(ii) or paragraph (e)(2) of this section, the owner or operator shall comply with all requirements of paragraph (e)(6) (iii)(A) or (iv)(A) of this section, respectively. Upon changing the method of compliance with paragraph (e)(1) of this section from paragraph (e)(1)(i) to paragraph (e)(1)(ii) or paragraph (e)(2) of this section, the owner or operator shall comply with all requirements of paragraph (e)(6) (iii) or (iv) of this section, respectively.

(*3*) For coating lines subject to paragraph (e)(1)(i)(A)(*3*) of this section, the owner or operator shall notify the Administrator of any change to the topcoating operation at least 30 days before the change is effected. The Administrator shall determine whether or not recertification testing is required. If the Administrator determines that recertification testing is required, then the owner or operator shall submit a proposal to the Administrator to test within 30 days and retest within 30 days of the Administrator's approval of the proposal.

(iii) Any owner or operator of a coating line subject to the limitations of paragraph (e)(1) of this section and complying by means of paragraph (e)(1)(ii) of this section shall comply with the following:

(A) By July 1, 1991, or upon initial start-up of a new coating line, or upon changing the method of compliance for an existing subject coating line from paragraph (e)(1)(i) or paragraph (e)(2) to paragraph (e)(1)(ii) of this section; the owner or operator of the subject coating line shall certify to the Administrator that the coating line will be in compliance with paragraph (e)(1)(ii) of this section on and after July 1, 1991, or on and after the initial start-up date. Such certification shall include:

(*1*) The name and identification number of each coating line which will comply by means of paragraph (e)(1)(ii) of this section.

(*2*) The name and identification number of each coating as applied on each coating line.

(*3*) The weight of VOM per volume and the volume of each coating (minus water and any compounds which are specifically exempted from the definition of VOM) as applied each day on each coating line.

(*4*) The instrument or method by which the owner or operator will accurately measure or calculate the volume of each coating as applied each day on each coating line.

(*5*) The method by which the owner or operator will create and maintain records each day as required in paragraph (e)(6)(iii)(B) of this section.

(*6*) An example of the format in which the records required in paragraph (e)(6)(iii)(B) of this section will be kept.

(B) On and after July 1, 1991, or on and after the initial start-up date, the owner or operator of a coating line subject to the limitations of paragraph (e)(1) of this section and complying by means of paragraph (e)(1)(ii) of this section, shall collect and record all of the following information each day for each coating line and maintain the information at the facility for a period of three years:

(*1*) The name and identification number of each coating as applied on each coating line.

(*2*) The weight of VOM per volume and the volume of each coating (minus water and any compounds which are specifically exempted from the definition of VOM) as applied each day on each coating line.

(*3*) The daily-weighted average VOM content of all coatings as applied on each coating line as defined in paragraph (a)(3) of this section.

(C) On and after July 1, 1991, the owner or operator of a subject coating line shall notify the Administrator in the following instances:

(*1*) Any record showing violation of paragraph (e)(1)(ii) of this section shall be reported by sending a copy of such record to the Administrator within 30 days following the occurrence of the violation.

(*2*) At least 30 calendar days before changing the method of compliance with paragraph (e) from paragraph (e)(1)(ii) to paragraph (e)(1)(i) or paragraph (e)(2) of this section, the owner or operator shall comply with all requirements of paragraph (e)(6)(ii)(A) or (iv)(A), respectively. Upon changing the method of compliance with paragraph (e) from paragraph (e)(1)(ii) to paragraph (e)(1)(i) or paragraph (e)(2) of this section, the owner or operator shall comply with all requirements of paragraph (e)(6)(ii) or (iv), respectively.

(iv) Any operator or owner of a coating line subject to the limitations of paragraph (e)(2) of this section and complying by means of paragraph (e)(2)(ii), (iii), (iv), (v), (vi) or (vii) of this section shall comply with the following:

(A) By July 1, 1991, or upon initial start-up of a new coating line, or upon changing the method of compliance for an existing coating line from paragraph (e)(1) (i) or (ii) to paragraph (e)(2) of this section; the owner or operator of the subject coating line shall perform all tests and submit to the Administrator the results of all tests and calculations necessary to demonstrate that the subject coating line will be in compliance with paragraph (e)(2) of this section on and after July 1, 1991, or on and after the initial start-up date.

(B) On and after July 1, 1991, or on and after the initial start-up date, the owner or operator of a coating line subject to the limitations of paragraph (e)(2) of this section and complying by means of paragraph (e)(2) (ii), (iii), (iv), (v), (vi) or (vii) of this section shall collect and record all of the following information each day for each coating line and maintain the information at the facility for a period of three years:

(*1*) The weight of VOM per volume of coating solids as applied each day on each coating line, if complying pursuant to paragraph (e)(2)(i)(B) of this section.

(*2*) Control device monitoring data.

(*3*) A log operating time for the capture system, control device, monitoring equipment and the associated coating line.

(*4*) A maintenance log for the capture system, control device and monitoring equipment detailing all routine and non-routine maintenance performed including dates and duration of any outages.

(C) On and after July 1, 1991, the owner or operator of a subject coating line shall notify the Administrator in the following instances:

(*1*) Any record showing violation of paragraph (e)(2) of this section shall be reported by sending a copy of such record to the Administrator within 30 days following the occurrence of the violation.

(*2*) At least 30 calendar days before changing the method of compliance with paragraph (e) from paragraph (e)(2) to paragraph (e)(1)(i) or paragraph (e)(1)(ii) of this section, the owner or operator shall comply with all requirements of paragraph (e)(6)(ii)(A) or (iii)(A) of this section, respectively. Upon changing the method of compliance with paragraph (e) from paragraph (e)(2) to paragraph (e)(1)(i) or paragraph (e)(1)(ii) of this section, the owner or operator shall comply with all requirements of paragraph (e)(6)(ii) or (iii) of this section, respectively.

(7) *Compliance schedule for diesel electric locomotive coatings.* Notwithstanding any other provision of this subpart, the compliance date for the emission limitations and standards for ''topcoat'' and ''final repair coat'' operations only as applied to General Motors Corporation at their diesel electric locomotive coating lines in Cook County, Illinois, codified at 40 CFR 52.741(e)(1)(i)(M) (*2*) and (*3*) is specified in this paragraph (e)(7). Compliance with the requirements of paragraph (e)(1), (e)(2) or (e)(3) of this section and paragraph (e)(6) of this section must be

in accordance with the appropriate compliance schedule as specified in paragraph (e)(7)(i),(ii),(iii), or (iv) of this section.

(i) No owner or operator of a coating line which is exempt from the limitations of paragraph (e)(1) of this section because of the criteria in paragraph (e)(3)(i) of this section shall operate said coating line on or after March 25, 1995, unless the owner or operator has complied with, and continues to comply with, paragraph (e)(6)(i) of this section.

(ii) No owner or operator of a coating line complying by means of paragraph (e)(1)(i) of this section shall operate said coating line on or after March 25, 1995, unless the owner or operator has complied with, and continues to comply with, paragraph (e)(1)(i) and (e)(6)(ii) of this section.

(iii) No owner or operator of a coating line complying by means of paragraph (e)(1)(ii) of this section shall operate said coating line on or after March 25, 1995, unless the owner or operator has complied with, and continues to comply with, paragraphs (e)(1)(ii) and (e)(6)(iii) of this section.

(iv) No owner or operator of a coating line complying by means of paragraph (e)(2) of this section shall operate said coating line on or after March 25, 1995, unless the owner or operator has complied with, and continues to comply with, paragraphs (e)(2) and (e)(6)(iv) of this section.

(8) The control requirements in this paragraph apply to the wood coating line, which coats wooden globe stand components, at Replogle Globes, Inc. (Replogle) Broadview facility in Cook County, Illinois, instead of the control requirements in paragraphs (e)(1) and (e)(2) of this section. Compliance with this paragraph must be demonstrated through the applicable coating analysis test methods and procedures specified in paragraph (a)(4)(i) of this section.

(i) After October 6, 1991, no coatings shall at any time be applied which exceed the following emission limitations for the specified coating.

(A) 6.59 pounds (lbs) Volatile Organic Material (VOM) per gallon of stain (minus water and any compounds which are specifically exempted from the definition of VOM) as applied to coat wooden globe stand components. Such stain consists of #9250 Walnut NGR Stain (RGI # W06000100), #9974 Cherry NGR Stain (RGI # W06003500) and #9943 Ash NGR Stain (RGI # W06003600). The Administrator must be notified at least ten (10) days prior to the use of any replacement stains.

(B) 5.53 lbs VOM per gallon of Sanding Sealer (minus water and any compounds which are specifically exempted from the definition of VOM) as applied to coat wooden globe stand components. Such sealer consists of #15304 High Build Sanding Sealer (RGI # W06003700). The Administrator must be notified at least ten (10) days prior to the use of any replacement sanding sealer.

(C) 5.20 lbs VOM per gallon of lacquer (minus water and any compounds which are specifically exempted from the definition of VOM) as applied to coat wooden globe stand components. Such lacquer consists of #15352 High Build Lacquer (RGI # W06003300). The Administrator shall be notified at least ten (10) days prior to the use of any replacement lacquer.

(ii) After October 6, 1991, the volume of coatings used shall not exceed the following:

(A) 5,000 gallons per year total for all coatings specified in paragraph (e)(8)(i)(A) of this section. The yearly volume of coatings used are to be calculated as follows:

(*1*) Compute the volume of specified coating used each month by the 15th of the following month.

(*2*) By the 15th of each month, add the monthly coating use for the 12 previous months (to obtain the yearly volume of coatings used).

(B) 4,000 gallons per year total for all coatings specified in paragraph (e)(8)(i)(B) of this section. The yearly volume of the coatings used are to be calculated as specified in paragraphs (e)(8)(ii)(A)(1) and (e)(8)(ii)(A)(2) of this section.

(C) 5,000 gallons per year total for all coatings specified in paragraph (e)(8)(i)(C) of this section. The yearly volume of coatings used are to be calculated as specified in paragraphs (e)(8)(ii)(A)(1) and (e)(8)(ii)(A)(2) of this section.

(iii) Beginning on October 6, 1991, the owner and operator of the Replogle Globes, Inc. plant in Broadview, Illinois shall keep the following records for each month. All records shall be retained at Replogle Globes, Inc. for three (3) years and shall be made available to the Administrator on request.

(A) the name and identification number of each coating as applied on any wood coating line.

(B) The weight of VOM per volume (determined in accordance with the procedures in paragraph (a)(4)(i) of this section) and the volume of each coating (minus water and any compounds which are specifically exempted from the definition of VOM) as applied each month on any wood coating line.

(9) [Reserved]

(10) Until December 31, 1996, the control and recordkeeping requirements in this paragraph apply to the three solvent-based polyester paper coating lines (Lines C, D and E) at Riverside Laboratories' Kane County, Illinois facility, instead of the control requirements in paragraphs (e)(1) and (e)(2) of this section and the recordkeeping requirements in paragraph (e)(6) of this section. Compliance with this paragraph must be demonstrated through the applicable coating analysis test methods and procedures specified in paragraph (a)(4)(i) of this section. The requirements in paragraphs (e)(1), (e)(2), and (e)(6) of this section shall apply to Riverside on and after December 31, 1996.

(i) After December 21, 1995, no coatings shall at any time be applied on Lines C, D or E which exceed 3.5 pounds (lbs.) volatile organic material (VOM) per gallon of coating (minus water and any compounds which are specifically exempted from the definition of VOM), except as provided in paragraph (e)(10)(ii) of this section.

(ii) After December 21, 1995, the following specifically identified coatings may exceed 3.5 lbs. VOM per gallon of coating (minus water and any compounds which are specifically exempted from the definition of VOM) only if they are applied on Line E and they do not exceed the limits indicated below (minus water and any compounds which are specifically exempted from the definition of VOM):

EXP–5027—4.34 lbs./gallon
PD 75 CLR—4.19 lbs./gallon
PD 75 BRN—4.18 lbs./gallon
SQZ–54—3.88 lbs./gallon
SPX–34GL—3.51 lbs./gallon

(iii) That portion of Riverside's polyester production which is manufactured with the use of any VOC, from Lines C, D, and E, may not exceed the following levels: 35 million square feet per year during and after 1992, 29 million square feet per year during and after 1994, and 25 million square feet during 1996. Compliance with this requirement shall be determined by adding the polyester production from any 12 consecutive months during and after the years indicated, through 1996. That is, the polyester production for any 12 consecutive months starting with January 1992 cannot exceed 35 million square feet; the polyester production from any 12 consecutive months starting with January 1994 cannot exceed 29 million square feet; and the polyester production for the twelve months from January through December 1996 cannot exceed 25 million square feet. Only those square feet of polyester whose production involves the use of VOC need to be restricted by the production levels in this paragraph (e)(10)(iii) of this section.

(iv) By December 21, 1995, Riverside shall certify to the Administrator that its polyester coating operations will be in compliance with paragraphs (e)(10)(i), (e)(10)(ii), and (e)(10)(iii) of this section. Such certification shall include the following:

(A) The name and identification number of each coating as applied on coating lines C, D and E.

(B) The weight of VOM per volume of each coating (minus water and any compounds which are specifically exempted from the definition of VOM) as applied on each coating line.

(v) The Administrator must be notified at least 10 days prior to the use of any polyester coating not previously identified pursuant to paragraph (e)(10)(iv) of this section. This notification must include the information specified in paragraphs (e)(10)(iv)(A) and (e)(10)(iv)(B) of this section.

(vi) On and after December 21, 1995, Riverside shall collect and record all of the following information each day for

each coating and maintain the information at the facility for a period of 3 years:

(A) The name and identification number of each coating as applied.

(B) The weight of VOM per volume of each coating (minus water and any compounds which are specifically exempted from the definition of VOM) as applied each day.

(C) Any record showing a VOM content in excess of the emission limits in paragraph (e)(10)(i) or (e)(10)(ii) of this section shall be reported by sending a copy of such record to the Administrator within 30 days following its collection.

(D) Any VOM besides acetone used in any coating must be identified.

(vii) Starting with the first full month after December 21, 1995, Riverside shall collect and record the figures on polyester production (in square feet), for each month and maintain the information at the facility for a period of at least 3 years.

(viii) Regardless of any other provision of paragraph (e)(10) of this section, after August 21, 1995 no coating which contains any VOM other than acetone shall at any time be applied on Line C, D, or E which exceeds 2.9 lbs. VOM per gallon of coating (minus water and any compounds which are specifically exempted from the definition of VOM).

(f)–(g) [Reserved]

(h) *Printing and publishing*—(1) *Flexographic and rotogravure printing.* (i) No owner or operator of a subject flexographic, packaging rotogravure or publication rotogravure printing line shall apply at any time any coating or ink unless the VOM content does not exceed the limitation specified in either paragraph (h)(1)(i)(A) or (B) of this section. Compliance with this paragraph must be demonstrated through the applicable coating or ink analysis test methods and procedures specified in paragraph (a)(4)(i) of this section and the recordkeeping and reporting requirements specified in paragraph (h)(4)(ii) of this section. As an alternative to compliance with paragraph (h)(1)(i) of this section, a subject printing line may meet the requirements of paragraph (h)(1)(ii) or (iii) of this section.

(A) Forty percent VOM by volume of the coating and ink (minus water and any compounds which are specifically exempted from the definition of VOM), or

(B) Twenty-five percent VOM by volume of the volatile content in the coating and ink.

(ii) No owner or operator of a subject flexographic, packaging rotogravure or publication rotogravure printing line shall apply coatings or inks on the subject printing line unless the weighted average, by volume, VOM content of all coatings and inks as applied each day on the subject printing line does not exceed the limitation specified in either paragraph (h)(1)(i)(A) (as determined by paragraph (h)(1)(ii)(A) or (h)(1)(i)(B) (as determined by paragraph (h)(1)(ii)(B) of this section. Compliance with this paragraph must be demonstrated through the applicable coating or ink analysis test methods and procedures specified in paragraph (a)(4)(i) of this section and the recordkeeping and reporting requirements specified in paragraph (h)(4)(iii) of this section.

(A) The following equation shall be used to determine if the weighted average VOM content of all coatings and inks as applied each day on the subject printing line exceeds the limitation specified in paragraph (h)(1)(i)(A) of this section.

$$VOM_{(i)(A)} = \frac{\sum_{i=1}^{n} C_i L_i \left(V_{si} + V_{VOMi}\right)}{\sum_{i=1}^{n} L_i \left(V_{si} + V_{VOMi}\right)}$$

Where:

$VOM_{(i)(A)}$ = The weighted average VOM content in units of percent VOM by volume of all coatings and inks (minus water and any compounds which are specifically exempted from the definition of VOM) used each day,

i = Subscript denoting a specific coating or ink as applied,

n = The number of different coatings and/or inks as applied each day on a printing line,

C_i = The VOM content in units of percent VOM by volume of each coating or ink as applied (minus water and any compounds which are specifically exempted from the definition of VOM),

L_i = The liquid volume of each coating or ink as applied in units of l (gal),
V_{si} = The volume fraction of solids in each coating or ink as applied, and
V_{VOMi} = The volume fraction of VOM in each coating or ink as applied.

(B) The following equation shall be used to determine if the weighted average VOM content of all coatings and inks as applied each day on the subject printing line exceeds the limitation specified in paragraph (h)(1)(i)(B) of this section.

$$VOM_{(i)(B)} = \frac{\sum_{i=1}^{n} C_i L_i V_{VMi}}{\sum_{i=1}^{n} L_i V_{VMi}}$$

Where:

$VOM_{(i)(B)}$ = The weighted average VOM content in units of percent VOM by volume of the volatile content of all coatings and inks used each day,
i = Subscript denoting a specific coating or ink as applied,
n = The number of different coatings and/or inks as applied each day on each printing line,
C_i = The VOM content in units of percent VOM by volume of the volatile matter in each coating or ink as applied,
L_i = The liquid volume of each coating or ink as applied in units of l (gal), and
V_{VMi} = The volume fraction of volatile matter in each coating or ink as applied.

(iii) No owner or operator of a subject flexographic, packaging rotogravure or publication rotogravure printing line equipped with a capture system and control device shall operate the subject printing line unless the owner or operator meets the requirements in paragraph (h)(1)(iii) (A), (B) or (C) and paragraphs (h)(1)(iii) (D), (E) and (F) of this section.

(A) A carbon adsorption system is used which reduces the captured VOM emissions by at least 90 percent by weight, or

(B) An incineration system is used which reduces the captured VOM emissions by at least 90 percent by weight, or

(C) An alternative VOM emission reduction system is demonstrated to have at least a 90 percent control device efficiency and the alternative emission reduction system is approved by the Administrator as a SIP or FIP revisions, and

(D) The printing line is equipped with a capture system and control device that provides an overall reduction in VOM emissions of at least:

(*1*) 75 percent where a publication rotogravure printing line is employed, or

(*2*) 65 percent where a packaging rotogravure printing line is employed, or

(*3*) 60 percent where a flexographic printing line is employed, and

(E) The control device is equipped with the applicable monitoring equipment specified in paragraph (a)(4)(iv)(B) of this section and the monitoring equipment is installed, calibrated, operated and maintained according to vendor specifications at all times the control device is in use, and

(F) The capture system and control device are operated at all times when the subject printing line is in operation. The owner or operator shall demonstrate compliance with this paragraph by using the applicable capture system and control device test methods and procedures specified in paragraphs (a)(4) (iii) through (vi) of this section and by complying with the recordkeeping and reporting requirements specified in paragraph (h)(4)(iv) of this section.

(2) *Applicability*. (i) The limitations of paragraph (h)(1) of this section apply to all flexographic and rotogravure printing lines at a subject facility. All facilities with flexographic and/or rotogravure printing lines are subject facilities unless:

(A) Total maximum theoretical emissions of VOM from all flexographic and rotogravure printing line(s) at the facility never exceed 90.7 Mg (100 tons) per calendar year before the application of capture systems and control devices, or

(B) A federally enforceable construction permit or SIP or FIP revision for all flexographic and rotogravure printing line(s) at a facility requires the owner or operator to limit production or capacity of these printing line(s) to reduce total VOM emissions from all flexographic and rotogravure printing line(s) to 90.7 Mg (100 tons) or less per calendar year before the application of capture systems and control devices.

(ii) Upon achieving compliance with paragraph (h) of this section, the emission source is not required to meet subpart K (sections 215.301 or 215.302) of 35 Ill. Adm. Code 215 (incorporated by reference as specified in 40 CFR 52.742). Emission sources exempt from paragraph (h) of this section are subject to subpart K (sections 215.301 or 215.302). Rotogravure or flexographic equipment used for both roll printing and paper coating are subject to paragraph (h) of this section.

(iii) Once subject to the limitations of paragraph (h)(1) of this section, a flexographic or rotogravure printing line is always subject to the limitations of paragraph (h)(1) of this section.

(iv) Any owner or operator of any flexographic or rotogravure printing line that is exempt from the limitations of paragraph (h)(1) of this section because of the criteria in paragraph (h)(2) of this section is subject to the recordkeeping and reporting requirements specified in paragraph (h)(4)(i) of this section.

(3) *Compliance schedule.* Every owner or operator of a flexographic and/or rotogravure printing line shall comply with the applicable requirements of paragraph (h)(1) of this section and paragraph (h)(4) of this section in accordance with the applicable compliance schedule specified in paragraph (h)(3) (i), (ii), (iii) or (iv) of this section.

(i) No owner or operator of a flexographic or rotogravure printing line which is exempt from the limitations of paragraph (h)(1) of this section because the criteria in paragraph (h)(2) of this section shall operate said printing line on or after July 1, 1991, unless the owner or operator has complied with, and continues to comply with, paragraph (h)(4)(i) of this section.

(ii) No owner or operator of a flexographic or rotogravure printing line complying by means of paragraph (h)(1)(i) of this section shall operate said printing line on or after July 1, 1991, unless the owner or operator has complied with, and continues to comply with, paragraphs (h)(1)(i) and (h)(4)(ii) of this section.

(iii) No owner or operator of a flexographic or rotogravure printing line complying by means of paragraph (h)(1)(ii) of this section shall operate said printing line on or after July 1, 1991, unless the owner or operator has complied with, and continues to comply with, paragraphs (h)(1)(ii) and (h)(4)(iii) of this section.

(iv) No owner or operator of a flexographic or rotogravure printing line complying by means of paragraph (h)(1)(iii) of this section shall operate said printing line on or after July 1, 1991, unless the owner or operator has complied with, and continues to comply with, paragraphs (h)(1)(iii) and (h)(4)(iv) of this section.

(4) *Recordkeeping and reporting.* The VOM content of each coating and ink and the efficiency of each capture system and control device shall be determined by the applicable test methods and procedures specified in paragraph (a)(4) of this section to establish the records required under paragraph (h)(4) of this section.

(i) Any owner or operator of a printing line which is exempted from the limitations of paragraph (h)(1) of this section because of the criteria in paragraph (h)(2) of this section shall comply with the following:

(A) By July 1, 1991, the owner or operator of a facility to which paragraph (h)(4)(i) of this section is applicable shall certify to the Administrator that the facility is exempt under the provisions of paragraph (h)(2) of this section. Such certification shall include:

(*1*) A declaration that the facility is exempt from the limitations of the criteria in paragraph (h)(1) of this section because of paragraph (h)(2) of this section, and

(*2*) Calculations which demonstrate that total maximum theoretical emissions of VOM from all flexographic and rotogravure printing lines at the facility never exceed 90.7 Mg (100 tons) per calendar year before the application of capture systems and control devices. Total maximum theoretical emissions of VOM for a flexograhpic or rotogravure printing facility is the sum of maximum theoretical emissions of VOM from each flexographic and rotogravure printing line at the facility. The following equation shall be used to calculate total maximum theoretical emissions of VOM per calendar year before the application of capture systems

and control devices for each flexographic and rotogravure printing line at the facility:

$$E_p = A \times B$$

Where:

E_p = Total maximum theoretical emissions of VOM from one flexographic or rotogravure printing line in units of kg/year (lbs/year),

A = Weight of VOM per volume of solids of the coating or ink with the highest VOM content as applied each year on the printing line in units of kg VOM/l (lbs VOM/gal) of coating or ink solids, and

B = Total volume of solids for all coatings and inks that can potentially be applied each year on the printing line in units of l/year (gal/year). The instrument and/or method by which the owner or operator accurately measured or calculated the volume of each coating and ink as applied and the amount that can potentially be applied each year on the printing line shall be described in the certification to the Administrator.

(B) On and after July 1, 1991, the owner or operator of a facility referenced in paragraph (h)(4)(i) of this section shall collect and record all of the following information each year for each printing line and maintain the information at the facility for a period of three years:

(*1*) The name and identification number of each coating and ink as applied on each printing line.

(*2*) The VOM content and the volume of each coating and ink as applied each year on each printing line.

(C) On and after July 1, 1991, the owner or operator of a facility exempted from the limitations of paragraph (h)(1) of this section because of the criteria in paragraph (h)(2) of this section shall notify the Administrator of any record showing that total maximum theoretical emissions of VOM from all printing lines exceed 90.7 Mg (100 tons) in any calendar year before the application of capture systems and control devices, shall be reported by sending a copy of such record to the Administrator within 30 days after the exceedance occurs.

(ii) Any owner or operator of a printing line subject to the limitations of paragraph (h)(1) of this section and complying by means of paragraph (h)(1)(i) of this section shall comply with the following:

(A) By July 1, 1991, or upon initial start-up of a new printing line, or upon changing the method of compliance from an existing subject printing line from paragraph (h)(1) (ii) or (iii) of this section to paragraph (h)(1)(i) of this section, the owner or operator of a subject printing line shall certify to the Administrator that the printing line will be in compliance with paragraph (h)(1)(i) of this section on and after July 1, 1991, or on and after the initial start-up date. Such certification shall include:

(*1*) The name and identification number of each coating and ink as applied on each printing line.

(*2*) The VOM content of each coating and ink as applied each day on each printing line.

(B) On and after July 1, 1991, or on and after the initial start-up date, the owner or operator of a printing line subject to the limitations of paragraph (h)(1) of this section and complying by means of paragraph (h)(1)(i) of this section shall collect and record all of the following information each day for each coating line and maintain the information at the facility for a period of three years:

(*1*) The name and identification number of each coating and ink as applied on each printing line.

(*2*) The VOM content of each coating and ink as applied each day on each printing line.

(C) On and after July 1, 1991, the owner or operator of a subject printing line shall notify the Administrator in the following instances:

(*1*) Any record showing violation of paragraph (h)(1)(i) of this section shall be reported by sending a copy of such record to the Administrator within 30 days following the occurrence of the violation.

(*2*) At least 30 calendar days before changing the method of compliance with paragraph (h)(1) of this section from paragraph (h)(1)(i) of this section to paragraph (h)(1) (ii) or (iii) of this section, the owner or operator shall comply with all requirements of paragraph (h)(4) (iii)(A) or (iv)(A) of this section respectively. Upon changing the method of compliance with paragraph (h)(1) from paragraph (h)(1)(i) to

paragraph (h)(1) (ii) or (iii) of this section, the owner or operator shall comply with all requirements of paragraph (h)(4) (iii) or (iv) of this section, respectively.

(iii) Any owner or operator of a printing line subject to the limitations of paragraph (h)(1) of this section and complying by means of paragraph (h)(1)(ii) of this section shall comply with the following:

(A) By July 1, 1991, or upon initial start-up of a new printing line, or upon changing the method of compliance for an existing subject printing line from paragraph (h)(1) (i) or (iii) of this section to paragraph (h)(1)(ii) of this section, the owner or operator of the subject printing line shall certify to the Administrator that the printing line will be in compliance with paragraph (h)(1)(ii) of this section on and after July 1, 1991, or on and after the initial start-up date. Such certification shall include:

(*1*) The name and identification number of each printing line which will comply by means of paragraph (h)(1)(ii) of this section.

(*2*) The name and identification number of each coating and ink available for use on each printing line.

(*3*) The VOM content of each coating and ink as applied each day on each printing line.

(*4*) The instrument or method by which the owner or operator will accurately measure or calculate the volume of each coating and ink as applied each day on each printing line.

(*5*) The method by which the owner or operator will create and maintain records each day as required in paragraph (h)(4)(iii)(B) of this section.

(*6*) An example of the format in which the records required in paragraph (h)(4)(iii)(B) of this section will be kept.

(B) On and after July 1, 1991, or on and after the initial start-up date, the owner or operator of a printing line subject to the limitations of paragraph (h)(1) of this section and complying by means of paragraph (h)(1)(ii) of this section shall collecting line and maintain the information at the facility for a period of three years:

(*1*) The name and identification number of each coating and ink as applied on each printing line.

(*2*) The VOM content and the volume of each coating and ink as applied each day on each printing line.

(*3*) The daily-weighted average VOM content of all coatings and inks as applied on each printing line.

(C) On and after July 1, 1991, the owner or operator of a subject printing line shall notify the Administrator in the following instances:

(*1*) Any record showing violation of paragraph (h)(1)(ii) of this section shall be reported by sending a copy of such record to the Administrator within 30 days following the occurrence of the violation.

(*2*) At least 30 calendar days before changing the method of compliance with paragraph (h)(1) of this section from paragraph (h)(1)(ii) to paragraph (h)(1)(i) or (iii) of this section, the owner or operator shall comply with all requirements of paragraph (h)(4)(ii)(A) or (iv)(A), respectively. Upon changing the method of compliance with paragraph (h)(1) from paragraph (h)(1)(ii) to paragraph (h)(1)(i) or (iii), the owner or operator shall comply with all requirements of paragraph (h)(4)(ii) or (iv) of this section, respectively.

(iv) Any owner or operator of a printing line subject to the limitations of paragraph (h)(1) of this section and complying by means of paragraph (h)(1)(iii) of this section shall comply with the following:

(A) By July 1, 1991, or upon initial start-up of a new printing line, or upon changing the method of compliance for an existing printing line from paragraph (h)(1)(i) or (ii) of this section to paragraph (h)(1)(iii) of this section, the owner or operator of the subject printing line shall perform all tests and submit to the Administrator the results of all tests and calculations necessary to demonstrate that the subject printing line will be in compliance with paragraph (h)(1)(iii) of this section on and after July 1, 1991, or on and after the initial start-up date.

(B) On and after July 1, 1991, or on and after the initial start-up date, the owner or operator of a printing line subject to the limitations of paragraph

(h)(1) of this section and complying by means of paragraph (h)(1)(iii) of this section shall collect and record all of the following information each day for each printing line and maintain the information at the facility for a period of three years:

(*1*) Control device monitoring data.

(*2*) A log of operating time for the capture system, control device, monitoring equipment and the associated printing line.

(*3*) A maintenance log for the capture system, control device and monitoring equipment detailing all routine and non-routine maintenance performed including dates and duration of any outages.

(C) On and after July 1, 1991, the owner or operator of a subject printing line shall notify the Administration in the following instances:

(*1*) Any record showing violation of paragraph (h)(1)(iii) of this section shall be reported by sending a copy of such record to the Administrator within 30 days following the occurrence of the violation.

(*2*) At least 30 calendar days before changing the method of compliance with paragraph (h)(1) from paragraph (h)(1)(iii) to paragraph (h)(1) (i) or (ii), the owner or operator shall comply with all requirements of paragraph (h)(4) (ii)(A) or (iii)(A) of this section, respectively. Upon changing the method of compliance with paragraph (h)(1) from paragraph (h)(1)(iii) to paragraph (h)(1) (i) or (ii) of this section, the owner or operator shall comply with all requirements of paragraph (h)(4) (ii) or (iii) of this section, respectively.

(5) *Heatset-web-offset lithographic printing*—(i) *Applicability*. (A) The limitations of paragraph (h)(5)(ii) of this section apply to all heatset-web-offset lithographic printing lines at a subject facility. All facilities with heatset-web-offset lithographic printing lines are subject facilities unless:

(*1*) Total maximum theoretical emissions of VOM from all heatset-web-offset lithographic printing lines at the facility never exceed 90.7 Mg (100 tons) per calendar year in the absence of air pollution control equipment, or

(*2*) A federally enforceable construction permit or SIP or FIP revision for all heatset-web-offset lithographic printing line(s) at a facility requires the owner or operator to limit production or capacity of these printing line(s) to reduce total VOM emissions from all heatset-web-offset lithographic printing line(s) to 90.7 Mg (100 tons) per calendar year or less in the absence of air pollution control equipment, and

(B) Any owner or operator of any heatset-web-offset lithographic printing line that is exempt from the limitations in paragraph (h)(5)(ii) of this section because of the criteria in paragraph (h)(5)(i)(A) of this section shall be subject to the recordkeeping and reporting requirements in paragraph (h)(5)(iii)(A) of this section.

(ii) *Specific provisions*. No owner or operator of a subject heatset-web-offset printing line may cause or allow the operation of the subject heatset-web-offset printing line unless the owner or operator meets the requirements in paragraph (h)(5)(ii) (A) or (B) of this section and the requirements in paragraphs (h)(5)(ii) (C) and (D) of this section.

(A) An afterburner system is installed and operated that reduces 90 percent of the VOM emissions from the dryer exhaust, or

(B) The fountain solution contains no more than 8 percent, by weight, of VOM and a condensation recovery system is installed and operated that removes at least 75 percent of the non-isopropyl alcohol organic materials from the dryer exhaust, and

(C) The control device is equipped with the applicable monitoring equipment specified in paragraph (a)(4)(iv)(B) of this section and the monitoring equipment is installed, calibrated, operated and maintained according to vendor specifications at all times the control device is in use, and

(D) The control device is operated at all times when the subject printing line is in operation. The owner or operator shall demonstrate compliance with paragraph (h)(5) of this section by using the applicable test methods and procedures specified in paragraphs (a)(4) (i), (iv), and (vi) of this section and by complying with the recordkeeping and reporting requirements

specified in paragraph (h)(5)(iii) of this section.

(iii) *Recordkeeping and reporting.* The VOM content of each fountain solution and ink and the efficiency of each control device shall be determined by the applicable test methods and procedures specified in paragraph (a)(4) of this section to establish the records required under paragraph (h)(5)(iii) of this section.

(A) Any owner or operator of a printing line which is exempted from the limitations of paragraph (h)(5)(ii) of this section because of the criteria in paragraph (h)(5)(i) of this section shall comply with the following:

(*1*) By July 1, 1991, the owner or operator of a facility to which paragraph (h)(5)(iii)(A) of this section is applicable shall certify to the Administrator that the facility is exempt under the provisions of paragraph (h)(5)(i) of this section. Such certification shall include:

(*i*) A declaration that the facility is exempt from the limitations of paragraph (h)(5)(ii) of this section because of the criteria in paragraph (h)(5)(i) of this section, and

(*ii*) Calculations which demonstrate that total maximum theoretical emissions of VOM from all heatset-web-offset lithographic printing lines at the facility never exceed 90.7 Mg (100 tons) per calendar year before the application of air pollution control equipment. Total maximum theoretical emissions of VOM for a heatset-web-offset lithographic printing facility is the sum of maximum theoretical emissions of VOM from each heatset-web-offset lithographic printing line at the facility. The following equation shall be used to calculate total maximum theoretical emissions of VOM per calendar year in the absence of air pollution control equipment for each heatset-web-offset lithographic printing line at the facility.

$$E_p = (A \times B) + \frac{(C \times D)}{100}$$

Where:

E_p = Total maximum theoretical emissions of VOM from one heatset-web-offset printing line in units of kg/year (lbs/year),

A = Weight of VOM per volume of solids of ink with the highest VOM content as applied each year on the printing line in units of kg VOM/l (lbs VOM/gal) of solids, and

B = Total volume of solids for all inks that can potentially be applied each year on the printing line in units of l/year (gal/year). The instrument or method by which the owner or operator accurately measured or calculated the volume of each ink as applied and the amount that can potentially be applied each year on the printing line shall be described in the certification to the Administrator.

C = The weight percent VOM of the fountain solution with the highest VOM content.

D = The total volume of fountain solution that can potentially be used each year on the printing line in units of l/year (gal/year). The instrument and/or method by which the owner or operator accurately measured or calculated the volume of each fountain solution used and the amount that can potentially be used each year on the printing line shall be described in the certification to the Administrator.

(*2*) On and after July 1, 1991, the owner or operator of a facility to which paragraph (h)(5)(iii)(A) of this section is applicable shall collect and record all of the following information each year for each printing line and maintain the information at the facility for a period of three years:

(*i*) The name and identification of each fountain solution and ink as applied on each printing line.

(*ii*) The VOM content and the volume of each fountain solution and ink as applied each year on each printing line.

(*3*) On and after July 1, 1991, the owner or operator of a facility exempted from the limitations of paragraph (h)(5)(ii) of this section because of the criteria in paragraph (h)(5)(i) of this section shall notify the Administrator of any record showing that total maximum theoretical emissions of VOM from all printing lines exceed 90.7 Mg (100 tons) in any calendar year in the absence of air pollution control equipment shall be reported by sending a copy of such record to the Administrator within 30 days after the exceedance occurs.

(B) Any owner or operator of a printing line subject to the limitations of paragraph (h)(5)(ii) of this section and complying by means of paragraph

(h)(5)(ii)(A) of this section shall comply with the following:

(*1*) By July 1, 1991, or upon initial start-up of a new printing line, or upon changing the method of compliance for an existing printing line from paragraph (h)(5) (ii)(B) to (ii)(A) of this section, the owner or operator of the subject printing line shall perform all tests and submit to the Administrator the results of all tests and calculations necessary to demonstrate that the subject printing line will be in compliance with paragraph (h)(5)(ii)(A) of this section on and after July 1, 1991, or on and after the initial start-up date.

(*2*) On and after July 1, 1991, or on and after the initial start-up date, the owner or operator of a printing line subject to the limitations of paragraph (h)(5)(ii) of this section and complying by means of paragraph (h)(5)(ii)(A) of this section shall collect and record the following information each day for each printing line and maintain the information at the facility for a period of three years:

(*i*) Control device monitoring data.

(*ii*) A log of operating time for the control device, monitoring equipment and the associated printing line.

(*iii*) A maintenance log for the control device and monitoring equipment detailing all routine and nonroutine maintenance performed including dates and duration of any outages.

(*3*) On and after July 1, 1991, the owner or operator of a subject printing line shall notify the Administrator in the following instances:

(*i*) Any record showing violation of paragraph (h)(5)(ii)(A) of this section shall be reported by sending a copy of such record to the Administrator within 30 days following the occurrence of the violation.

(*ii*) At least 30 calendar days before changing the method of compliance with paragraph (h)(5)(ii) of this section from paragraph (h)(5) (ii)(A) to (ii)(B), the owner or operator shall comply with all requirements of paragraph (h)(5)(iii)(C)(*1*) of this section. Upon changing the method of compliance with paragraph (h)(5)(ii) from paragraph (h)(5) (ii)(A) to (ii)(B) of this section the owner or operator shall comply with all requirements of paragraph (h)(5)(iii)(C) of this section.

(C) Any owner or operator of a printing line subject to the limitations of paragraph (h)(5)(ii) of this section and complying by means of paragraph (h)(5)(ii)(B) of this section shall comply with the following:

(*1*) By July 1, 1991, or upon initial start-up of a new printing line, or upon changing the method of compliance for an existing printing line from paragraph (h)(5) (ii)(A) to (ii)(B) of this section, the owner or operator of the subject printing line shall perform all tests and submit to the Administrator the results of all tests and calculations necessary to demonstrate that the subject printing line will be in compliance with paragraph (h)(5)(ii)(B) of this section on and after July 1, 1991, or on and after the initial start-up date.

(*2*) On and after July 1, 1991, or on and after the initial start-up date, the owner or operator of a printing line subject to the limitations of paragraph (h)(5)(ii) of this section and complying by means of paragraph (h)(5)(ii)(B) of this section shall collect and record the following information each day for each printing line and maintain the information at the facility for a period of three years:

(*i*) The VOM content of the fountain solution used each day on each printing line.

(*ii*) A log of operating time for the control device and the associated printing line.

(*iii*) A maintenance log for the control device detailing all routine and non-routine maintenance performed including dates and duration of any outages.

(*3*) On and after July 1, 1991, the owner or operator of a subject printing line shall notify the Administrator in the following instances:

(*i*) Any record showing violation of paragraph (h)(5)(ii)(B) of this section shall be reported by sending a copy of such record to the Administrator within 30 days following the occurrence of the violation.

(*ii*) At least 30 calendar days before changing the method of compliance with paragraph (h)(5)(ii) of this section from paragraph (h)(5)(ii)(B) to (h)(5)(ii)(A) of this section, the owner or operator shall comply with all requirements of paragraph (h)(5)(iii)(B)(*1*)

of this section. Upon changing the method of compliance with paragraph (h)(5)(ii) of this section from paragraph (h)(5)(ii)(B) to (h)(5)(ii)(A) of this section, the owner or operator shall comply with all requirements of paragraph (h)(5)(iii)(B) of this section.

(iv) *Compliance schedule.* Every owner or operator of a heatset-web-offset lithographic printing line shall comply with the applicable requirements of paragraphs (h)(5) (ii) and (iii) of this section in accordance with the applicable compliance schedule specified in paragraph (h)(5)(iv) (A), (B) or (C) of this section.

(A) No owner or operator of a heatset-web-offset lithographic printing line which is exempt from the limitations of paragraph (h)(5)(ii) of this section because of the criteria in paragraph (h)(5)(i) of this section shall operate said printing line on or after July 1, 1991, unless the owner or operator has complied with, and continues to comply with, paragraphs (h)(5)(iii)(A) and (h)(5)(ii)(A) of this section.

(B) No owner or operator of a heatset-web-offset lithographic printing line complying by means of paragraph (h)(5)(ii)(A) of this section shall operate said printing line on or after July 1, 1991, unless the owner or operator has complied with, and continues to comply with, paragraphs (h)(5)(iii)(B) and (h)(5)(ii)(B) of this section.

(C) No owner or operator of a heatset-web-offset lithographic printing line complying by means of paragraph (h)(5)(ii)(B) of this section shall operate said printing line on or after July 1, 1991, unless the owner or operator has complied with, and continues to comply with, paragraph (h)(5)(iii)(C) of this section.

(6) The control and recordkeeping and reporting requirements, as well as the test methods in this paragraph, apply to the rotogravure and flexographic presses at General Packaging Products, Inc.'s (GPP) plant in Chicago, Illinois, instead of the requirements in 40 CFR 52.741(h)(1) through 40 CFR 52.741(h)(5).

(i) After July 1, 1992, no inks or other volatile organic material (VOM) containing materials shall at any time be applied or used which have a higher percent VOM by weight than the following:

(A) 8 percent VOM by weight for waterbased inks as applied on GPP's presses.

(B) 82 percent VOM by weight for solvent based inks as applied on GPP's presses.

(C) 100 percent VOM by weight for all other VOM containing materials (besides inks) as used on GPP's presses.

(ii) After July 1, 1992, the weight of ink and other VOM containing materials used shall not exceed the following:

(A) 200,000 pounds per year total for all waterbased inks, as applied (including dilution material). The yearly weight of waterbased inks used is to be calculated according to the procedure in paragraph (h)(6)(iii) of this section.

(B) 100,008 pounds per year total for all solvent based inks, as applied (including dilution material). The yearly weight of solvent based inks used is to be calculated according to the procedure in paragraph (h)(6)(iii) of this section.

(C) 100,000 pounds per year total (based upon the formulation of the material as it is used on the presses) for all other VOM containing materials (besides inks). The yearly weight of other VOM containing materials is to be calculated according to the procedure in paragraph (h)(6)(iii) of this section.

(iii) The yearly weight of ink/material used is to be calculated as follows:

(A) Compute the weight of ink/material used each month by the 15th of the following month.

(B) By the 15th of each month, add the monthly ink/material usage for the 12 previous months (to obtain the yearly weight of ink/material used).

(iv) Beginning on July 1, 1992, the owner and operator of GPP's plant in Chicago, Illinois, shall keep the following records for each month. All records shall be retained at GPP for 3 years and shall be made available to the Administrator on request:

(A) The name and identification number of each waterbased ink, each solvent based ink, and each other VOM containing material as applied or used on any press.

(B) The pounds of waterbased ink as applied on all presses for each month and the percent VOM by weight for each waterbased ink as applied on any press for each month.

(C) The pounds of solvent based ink as applied on all presses for each month and the percent VOM by weight for each solvent based ink as applied on any press for each month.

(D) The pounds of other (non-ink) VOM containing material used on all presses for each month and the percent VOM by weight for each (non-ink) VOM containing material as used on any press for each month.

(v) Any record showing a violation of paragraph (h)(6)(i) or (h)(6)(ii) of this section shall be reported by sending a copy of such record to the Administrator within 30 days of the violation.

(vi) To determine compliance with paragraphs (h)(6)(i) and (h)(6)(ii) of this section and to establish the records required under paragraph (h)(6)(iv) of this section the percent VOM by weight of each ink and other VOM containing material shall be determined by the applicable test methods and procedures specified in paragraph (a)(4) of this section.

(i) *Leaks from synthetic organic chemical and polymer manufacturing equipment*—(1) *Inspection program for leaks.* The owner or operator of a synthetic organic chemical or polymer manufacturing plant subject to paragraph (i) and subpart Q (sections 215.430, 215.431, 215.433, 215.434, 215.435, and 215.437) of Ill. Adm. Code 215 (incorporated by reference as specified in 40 CFR 52.742) shall, for the purposes of detecting leaks, conduct a component inspection program using the test methods specified in Method 21, 40 CFR part 60, appendix A, consistent with the following provisions:

(i) Test annually those components operated near extreme temperature or pressure such that they would be unsafe to routinely monitor and those components which would require the elevation of monitoring personnel higher than two meters above permanent worker access structures or surfaces.

(ii) Test quarterly all other pressure relief valves in gas service, pumps in light liquid service, valves in light liquid service and in gas service, and compressors.

(iii) If less than or equal to 2 percent of the valves in light liquid service and in gas service tested pursuant to paragraph (i)(1)(ii) of this section are found not to leak for five consecutive quarters, no leak tests shall be required for three consecutive quarters. Thereafter, leak tests shall resume for the next quarter. If that test shows less than or equal to 2 percent of the valves in light liquid service and in gas service are leaking, then no tests are required for the next three quarters. If more than 2 percent are leaking, then tests are required for the next five quarters.

(iv) Observe visually all pump seals weekly.

(v) Test immediately any pump seal from which liquids are observed dripping.

(vi) Test any relief valve within 24 hours after it has vented to the atmosphere.

(vii) Routine instrument monitoring of valves which are not externally regulated, flanges, and equipment in heavy liquid service, is not required. However, any valve which is not externally regulated, flange or piece of equipment in heavy liquid service that is found to be leaking on the basis of sight, smell or sound shall be repaired as soon as practicable but no later than 30 days after the leak is found.

(viii) Test immediately after repair any component that was found leaking.

(ix) Within one hour of its detection, a weatherproof, readily visible tag, in bright colors such as red or yellow, bearing an identification number and the date on which the leak was detected must be affixed on the leaking component and remain in place until the leaking component is repaired.

(x) The following components are exempt from the monitoring requirements in paragraph (i)(1) of this section:

(A) Any component that is in vacuum service, and

(B) Any pressure relief valve that is connected to an operating flare header or vapor recovery device.

(2) *Alternative program for leaks*. The Administrator shall approve an alternative program of monitoring, recordkeeping, or reporting to that prescribed in paragraph (i) and subpart Q (sections 215.430, 215.431, 215.433, 215.434, 215.435, and 215.437) of Ill. Adm. Code 215 (incorporated by reference as specified in 40 CFR 52.742), upon a demonstration by the owner or operator of such plant that the alternative program will provide plant personnel and USEPA personnel with an equivalent ability to identify and repair leaking components. Any alternative program can only be allowed if approved by the Administrator as a SIP or FIP revision.

(j) *Petroleum refining and related industries: asphalt materials*—(1) *Monitoring program for leaks*. (i) The owner or operator of a petroleum refinery subject to subpart R (section 215.445) of Ill. Adm. Code 215 (incorporated by reference as specified in 40 CFR 52.742) shall, for the purpose of detecting leaks, conduct a component monitoring program consistent with the following provisions:

(A) Test once between March 1 and June 1 of each year, by methods referenced in paragraph (a)(4)(vii) of this section, all pump seals, pipeline valves in liquid service and process drains.

(B) Test once each quarter of each calendar year, by methods referenced in paragraph (a)(4)(vii) of this section, all pressure relief valves in gaseous service, pipeline valves in gaseous service and compressor seals.

(C) Inaccessible valves may be tested once each calendar year instead of once each quarter of each calendar year.

(D) Observe visually all pump seals weekly.

(E) Test immediately any pump seal from which liquids are observed dripping,

(F) Test any relief valve within 24 hours after it has vented to the atmosphere, and

(G) Test immediately after repair any component that was found leaking.

(ii) Storage tank valves and pressure relief devices connected to an operating flare header or vapor recovery device are exempt from the monitoring requirements in paragraph (j)(1)(i) of this section.

(iii) The Administrator may require more frequent monitoring than would otherwise be required by paragraph (j)(1)(i) of this section for components which are demonstrated to have a history of leaking.

(2) *Alternative program for leaks*. The Administrator may approve an alternative program of monitoring, recordkeeping or reporting to that prescribed in paragraph (j)(1) of this section and subpart R (sections 215.446, 215.448, and 215.449) of Ill. Adm. Code 215 (incorporated by reference as specified in 40 CFR 52.742), upon a demonstration by the owner or operator of a petroleum refinery that the alternative program will provide refinery and USEPA personnel with an equivalent ability to identify and repair leaking components. Any alternative program can only be allowed if approved by the Administrator as a SIP or FIP revision.

(3) *Compliance schedule for leaks*. The owner or operator of a petroleum refinery shall adhere to the increments of progress contained in the following schedule:

(i) Submit to the Administrator a monitoring program consistent with subpart R (section 215.446) of Ill. Adm. Code 215 (incorporated by reference as specified in 40 CFR 52.742) prior to September 1, 1990.

(ii) Submit to the Administrator the first monitoring report pursuant to subpart R (section 215.449) of Ill. Adm. Code 215 (incorporated by reference as specified in 40 CFR 52.742) prior to October 1, 1990.

(k)–(l) [Reserved]

(m) *Pharmaceutical manufacturing*—(1) *Applicability*. (i) The rules of paragraph (m) of this section, except for paragraphs (m)(4) through (m)(6) of this section, apply to all emission sources of VOM, including but not limited to reactors, distillation units, dryers, storage tanks for VOL, equipment for the transfer of VOL, filters, crystallizers, washers, laboratory hoods, pharmaceutical coating operations, mixing operations and centrifuges used in manufacturing, including packaging, of pharmaceuticals, and emitting more than 6.8 kg/day (15 lbs/day) and more than 2,268 kg/year (2.5 tons/year) of VOM. If an emission source emits less than 2,268 kg/year (2.5 tons/year) of

VOM, the requirements of this paragraph still apply to the emission source if VOM emissions from the emission source exceed 45.4 kg/day (100 lbs/day).

(ii) Notwithstanding paragraph (m)(1)(i) of this section, the air suspension coater/dryer, fluid bed dryers, tunnel dryers, and Accelacotas located in Libertyville Township, Lake County, Illinois shall be exempt from the rules of paragraph (m) of this section, except for paragraphs (m)(4) through (m)(6) of this section, if emissions of VOM not vented to air pollution control equipment do not exceed the following levels:

(A) For the air suspension coater/dryer: 2,268 kg/year (2.5 tons/year);

(B) For each fluid bed dryer: 4,535 kg/year (5.0 tons/year);

(C) For each tunnel dryer: 6,803 kg/year (7.5 tons/year); and

(D) For each Accelacota: 6,803 kg/year (7.5 tons/year).

(iii) Paragraphs (m)(4) through (m)(6) of this section apply to a plant having one or more emission sources that:

(A) Are used to manufacture pharmaceuticals, and

(B) Emit more than 6.8 kg/day (15 lbs/day) of VOM and more than 2,268 kg/year (2.5 tons/year) of VOM, or, if less than 2,268 kg/year (2.5 tons/year), these paragraphs still apply if emissions from one or more sources exceed 45.4 kg/day (100 lbs/day).

(iv) No owner or operator shall violate any condition in a permit when the condition results in exclusion of an emission source from paragraph (m) of this section.

(v) Any pharmaceutical manufacturing source that becomes subject to the provisions of paragraph (m) of this section at any time shall remain subject to the provisions of paragraph (m) of this section at all times.

(vi) Emissions subject to paragraph (m) of this section shall be controlled at all times consistent with the requirements set forth in paragraph (m) of this section.

(vii) Control devices required pursuant to paragraph (m) of this section shall be operated at all times when the source it is controlling is operated.

(viii) Determinations of daily and annual emissions for purposes of paragraph (m)(1) of this section shall be made using both data on the hourly emission rate (or the emissions per unit of throughput) and appropriate daily and annual data from records of emission source operation (or material throughput or material consumption data). In the absence of representative test data pursuant to paragraph (m)(8) of this section for the hourly emission rate (or the emissions per unit of throughput), such items shall be calculated using engineering calculations, including the methods described in appendix B of ''Control of Volatile Organic Emissions from Manufacturing of Synthesized Pharmaceutical Products'' (EPA–450/2–78–029). (This subparagraph shall not affect the Administrator's authority to require emission tests to be performed pursuant to paragraph (m)(8) of this section.)

(2) *Control of reactors, distillation units, crystallizers, centrifuges and vacuum dryers.* (i) The owner or operator shall equip all reactors, distillation units, crystallizers, centrifuges and vacuum dryers that are used to manufacture pharmaceuticals with surface condensers or other air pollution control equipment listed in paragraph (m)(2)(i)(B) of this section.

(A) If a surface condenser is used, it shall be operated such that the condenser outlet gas temperature does not exceed:

(*1*) 248.2 K (−13 °F) when condensing VOM of vapor pressure greater than 40.0kPa (5.8 psi) at 294.3K (70 °F), or

(*2*) 258.2 K (5 °F) when condensing VOM of vapor pressure greater than 20.0 kPa (2.9 psi) at 294.3 K (70 °F), or

(*3*) 273.2 K (32 °F) when condensing VOM of vapor pressure greater than 10.0 kPa (1.5 psi) at 294.3 K (70 °F), or

(*4*) 283.2 K (50 °F) when condensing VOM of vapor pressure greater than 7.0 kPa (1.0 psi) at 294.3 K (70 °F), or

(*5*) 298.2 K (77 °F) when condensing VOM of vapor pressure greater than 3.45 kPa (0.5 psi) at 294.3 K (70 °F).

(B) If a scrubber, carbon adsorption, thermal afterburner, catalytic afterburner, or other air pollution control equipment other than a surface condenser is used, such equipment shall provide a reduction in the emissions of VOM of 90 percent or more.

(ii) The owner or operator shall enclose all centrifuges used to manufacture pharmaceuticals and that have an exposed VOL surface, where the VOM in the VOL has a vapor pressure of 3.45 kPa (0.5 psi) or more at 294.3 K (70 °F), except as production, sampling, maintenance, or inspection procedures require operator access.

(3) *Control of air dryers, production equipment exhaust systems and filters.* (i) The owner or operator of an air dryer or production equipment exhaust system used to manufacture pharmaceuticals shall control the emissions of VOM from such emission sources by air pollution control equipment which reduces by 90 percent or more the VOM that would otherwise be emitted into the atmosphere.

(ii) The owner or operator shall enclose all rotary vacuum filters and other filters used to manufacture pharmaceuticals and that have an exposed VOL surface, where the VOM in the VOL has a vapor pressure of 3.45 kPa (0.5 psi) or more at 294 K (70 °F), except as production, sampling, maintenance, or inspection procedures require operator access.

(4) *Material storage and transfer.* The owner or operator of a pharmaceutical manufacturing plant shall:

(i) Provide a vapor balance system that is at least 90 percent effective in reducing VOM emissions from truck or railcar deliveries to storage tanks with capacities equal to or greater than 7.57 m^3 (2,000 gal) that store VOL with vapor pressures greater than 28.0 kPa (4.1 psi) at 294.3 K (70 °F), and

(ii) Install, operate, and maintain pressure/vacuum conservation vents set at 0.2 kPa (0.03 psi) or greater on all storage tanks that store VOL with vapor pressures greater than 10 kPa (1.5 psi) at 294.3 K (70 °F).

(5) *In-process tanks.* The owner or operator shall install covers on all in-process tanks used to manufacture pharmaceuticals and containing a VOL at any time. These covers must remain closed, except as production, sampling, maintenance or inspection procedures require operator access.

(6) *Leaks.* The owner or operator of a pharmaceutical manufacturing plant shall repair any component from which a leak of VOL can be observed. The repair shall be completed as soon as practicable but no later than 15 days after the leak is found. If the leaking component cannot be repaired until the process unit is shut down, the leaking component must then be repaired before the unit is restarted.

(7) *Other emission sources.* The owner or operator of a washer, laboratory hood, tablet coating operation, mixing operation or any other process emission source not subject to paragraphs (m)(2) through (m)(6) of this section, and used to manufacture pharmaceuticals shall control the emissions of VOM from such emission sources by:

(i) Air pollution control equipment which reduces by 81 percent or more the VOM that would otherwise be emitted to the atmosphere, or

(ii) A surface condenser which captures all the VOM which would otherwise be emitted to the atmosphere and which meets the requirements of paragraph (m)(2)(i) of this section.

(8) *Testing.* (i) Upon request by the Administrator, the owner or operator of any VOM emission source subject to paragraph (m) or exempt from paragraph (m) of this section by virtue of the provisions of paragraph (m)(1) of this section shall, at his own expense, demonstrate compliance to the Administrator by the methods or procedures listed in paragraph (a)(vi)(A) of this section.

(ii) A person planning to conduct a VOM emissions test to demonstrate compliance with paragraph (m) of this section shall notify the Administrator of that intent not less than 30 calendar days before the planned initiation of the test.

(9) *Monitoring and recordkeeping for air pollution control equipment*—(i) *Monitoring.* (A) At a minimum, continuous monitors for the following parameters shall be installed on air pollution control equipment used to control sources subject to paragraph (m) of this section:

(*1*) Destruction device combustion temperature.

(*2*) Temperature rise across a catalytic afterburner bed.

(*3*) VOM concentration on a carbon absorption unit to determine breakthrough.

(*4*) Outlet gas temperature of a refrigerated condenser.

(*5*) Temperature of a non-refrigerated condenser coolant supply system.

(B) Each monitor shall be equipped with a recording device.

(C) Each monitor shall be calibrated quarterly.

(D) Each monitor shall operate at all times while the associated control equipment is operating.

(ii) *Recordkeeping*. (A) The owner or operator of a pharmaceutical manufacturing facility shall maintain the following records:

(*1*) Parameters listed in paragraph (m)(9)(i)(A) of this section shall be recorded.

(*2*) For sources subject to paragraph (m)(2) of this section, the vapor pressure of VOM being controlled shall be recorded for every process.

(B) For any leak subject to paragraph (m)(6) of this section which cannot be readily repaired within one hour after detection, the following records shall be kept:

(*1*) The name of the leaking equipment,

(*2*) The date and time the leak is detected,

(*3*) The action taken to repair the leak, and

(*4*) The data and time the leak is repaired.

(C) The following records shall be kept for emission sources subject to paragraph (m)(5) of this section which contain VOL:

(*1*) For maintenance and inspection:

(*i*) The date and time each cover is opened,

(*ii*) The length of time the cover remains open, and

(*iii*) The reason why the cover is opened.

(*2*) For production and sampling, detailed written procedures or manufacturing directions specifying the circumstances under which covers may be opened and the procedures for opening covers.

(D) For each emission source used in the manufacture of pharmaceuticals for which the owner or operator of a pharmaceutical manufacturing plant claims emission standards are not applicable, because the emissions are below the applicability cutoffs in paragraph (m)(1)(i) of this section or paragraph (m)(1)(ii) of this section the owner or operator shall:

(*1*) Maintain a demonstration including detailed engineering calculations of the maximum daily and annual emissions for each such emission source showing that the emissions are below the applicability cutoffs in paragraph (m)(1)(i) or paragraph (m)(1)(ii) of this section, as appropriate, for the current and prior calendar years;

(*2*) Maintain appropriate operating records for each such emission source to identify whether the applicability cutoffs in paragraph (m)(1)(i) or paragraph (m)(1)(ii) of this section, as appropriate, are ever exceeded; and

(*3*) Provide written notification to the Administrator within 30 days of a determination that such an emission source has exceeded the applicability cutoffs in paragraph (m)(1)(i) or paragraph (m)(1)(ii) of this section, as appropriate.

(E) Records required under paragraph (m)(9)(ii)(A) of this section shall be maintained by the owner or operator for a minimum of two years after the date on which they are made.

(F) Copies of the records shall be made available to the Administrator upon verbal or written request.

(n)–(p) [Reserved]

(q) *Gasoline distribution—(*1) *Bulk gasoline plants*. (i) Subject to paragraph (q)(1)(v) of this section, no person may cause or allow the transfer of gasoline from a delivery vessel into a stationary storage tank located at a bulk gasoline unless:

(A) The delivery vessel and the stationary storage tank are each equipped with a vapor collection system that meets the requirements of paragraph (q)(1)(iv)(D) of this section,

(B) Each vapor collection system is operating,

(C) The delivery vessel displays the appropriate sticker pursuant to the requirements of sections 215.584 (b) or (d) of 35 Ill. Adm. Code 215 (incorporated by reference as specified in 40 CFR 52.742),

(D) The pressure relief valve(s) on the stationary storage tank and the delivery vessel are set to release at no less than 0.7 psi or the highest pressure allowed by state or local fire codes or the

guidelines of the National Fire Prevention Association, and

(E) The stationary storage tank is equipped with a submerged loading pipe.

(ii) Subject to paragraph (q)(1)(vi) of this section, no person may cause or allow the transfer of gasoline from a stationary storage tank located at a bulk gasoline plant into a delivery vessel unless:

(A) The requirements set forth in paragraphs (q) (1)(i)(A) through (1)(i)(D) of this section are met, and

(B) Equipment is available at the bulk gasoline plant to provide for the submerged filling of the delivery vessel or the delivery vessel is equipped for bottom loading.

(iii) Subject to paragraph (q)(1)(v) of this section, each owner of a stationary storage tank located at a bulk gasoline plant shall:

(A) Equip each stationary storage tank with a vapor control system that meets the requirements of paragraph (q) (1)(i) or (1)(ii) of this section, whichever is applicable,

(B) Provide instructions to the operator of the bulk gasoline plant describing necessary maintenance operations and procedures for prompt notification of the owner in case of any malfunction of a vapor control system, or

(C) Repair, replace or modify any worn out or malfunctioning component or element of design.

(iv) Subject to paragraph (q)(1)(v) of this section, each operator of a bulk gasoline plant shall:

(A) Maintain and operate each vapor control system in accordance with the owner's instructions,

(B) Promptly notify the owner of any scheduled maintenance or malfunction requiring replacement or repair of a major component of a vapor control system,

(C) Maintain gauges, meters or other specified testing devices in proper working order, and

(D) Operate the bulk plant vapor collection system and gasoline loading equipment in a manner that prevents:

(*1*) Gauge pressure from exceeding 45.7 cm (18 in.) of water and vacuum from exceeding 15.2 cm (6 in.) of water, as measured as close as possible to the vapor hose connection,

(*2*) A reading equal to or greater than 100 percent of the lower explosive limit (LEL measured as propane) when tested in accordance with the procedure described in ''Control of Volatile Organic Compound Leaks from Gasoline Tank Trucks and Vapor Collection Systems'', Appendix B, EPA 450/2–78–051 (which is available for purchase from the National Technical Information Services, 5285 Port Royal Road, Springfield, VA 22161), and

(*3*) Avoidable leaks of liquid during loading or unloading operations.

(E) Provide a pressure tap or equivalent on the bulk plant vapor collection system in order to allow the determination of compliance with paragraph (q)(1)(iv)(D)(*1*) of this section, and

(F) Within 15 business days after discovery of any leak by the owner, operator, or the Administrator, repair and retest a vapor collection system which exceeds the limits of paragraph (q)(1)(iv)(D) (*1*) or (*2*) of this section.

(v) The requirements of paragraphs (q) (1)(i), (1)(iii) and (1)(iv) of this section, shall not apply to:

(A) Any stationary storage tank with a capacity of less than 2,177 l (575 gal), or

(B) Any bulk gasoline plant whose daily gasoline throughtput is less than 15,140 l (4,000 gal/day) on a thirty-day rolling average.

(vi) The requirements of paragraph (q)(1)(ii) of this section shall only apply to bulk gasoline plants:

(A) Whose daily gasoline throughput is greater than or equal to 15,140 l (4,000 gal/day) on a thirty-day rolling average, and

(B) That either distribute gasoline to gasoline dispensing facilities subject to the requirements of section 215.583(a)(2) of 35 Ill. Adm. Code 215 (incorporated by reference as specified in 40 CFR 52.742) or that are in Cook, DuPage, Kane, Lake, McHenry or Will County.

(vii) Any bulk gasoline plant which is ever subject to paragraph (q)(1) (i), (ii), (iii) or (iv) of this section shall always be subject to these paragraphs.

(2) [Reserved]

(r) [Reserved]

(s) *Paint and ink manufacturing*—(1) *Applicability*. (i) Paragraph (s) shall apply to all paint and ink manufacturing plants which:

(A) Include process emission sources not subject to subparts (B), (Q) (excluding sections 215.432 and 215.436), (R) (excluding sections 215.447, 215.450, and 215.452), (S), (V), (X), (Y) (sections 215.582, 215.583, and 215.584), or (Z) of 35 Ill. Adm. Code 215 (incorporated by reference as specified in 40 CFR 52.742), or to paragraphs (d), (e) (excluding paragraph (e)(1)(i)(L)), (h) (excluding paragraph (h)(5)), (i), (j), or (q)(1) of this section; and which as a group both:

(*1*) Have maximum theoretical emissions of 91 Mg (100 tons) or more per calendar year of VOM if no air pollution control equipment were used, and

(*2*) Are not limited to less than 91 Mg (100 tons) of VOM emissions per calendar year in the absence of air pollution control equipment, through production or capacity limitations contained in a federally enforceable construction permit or a SIP or FIP revision, or

(B) Produce more than 7,570,820 l (2,000,000 gal) per calendar year of paint or ink formulations, which contain less than 10 percent (by weight) water, and ink formulations not containing as the primary solvents water, Magie oil or glycol.

(ii) For the purposes of paragraph (s) of this section, uncontrolled VOM emissions are the emissions of VOM which would result if no air pollution control equipment were used.

(2) *Exemption for waterbase material and heatset-offset ink*. The requirements of paragraphs (s)(4) and (s)(5) of this section and paragraph (s)(7)(i) of this section shall not apply to equipment while it is being used to produce either:

(i) Paint or ink formulations which contain 10 percent or more (by weight) water, or

(ii) Inks containing Magie oil and glycol as the primary solvent.

(3) *Permit conditions*. No person shall violate any condition in a federally enforceable permit when the condition results in exclusion of the plant or an emission source from paragraph (s).

(4) *Open-top mills, tanks, vats or vessels*. No person shall operate an open-top mill, tank, vat or vessel with a volume of more than 45 l (12 gal) for the production of paint or ink unless:

(i) The mill, tank, vat or vessel is equipped with a cover which completely covers the mill, tank, vat or vessel opening except for an opening no larger than necessary to allow for safe clearance for a mixer shaft. Such cover shall extend at least 1.27 cm (0.5 in.) beyond the outer rim of the opening or be attached to the rim.

(ii) The cover remains closed except when production, sampling, maintenance or inspection procedures require access.

(iii) The cover is maintained in good condition such that, when in place, it maintains contact with the rim of the opening for at least 90 percent of the circumference of the rim.

(5) *Grinding mills*. (i) No person shall operate a grinding mill for the production of paint or ink which is not maintained in accordance with the manufacturer's specifications.

(ii) No person shall operate a grinding mill fabricated or modified after the effective date of paragraph (s) which is not equipped with fully enclosed screens.

(iii) The manufacturer's specifications shall be kept on file at the plant by the owner or operator of the grinding mill and be made available to any person upon verbal or written request during business hours.

(6) *Storage tanks*. (i) The owner or operator shall equip tanks storing VOL with a vapor pressure greater than 10 kPa (1.5 psi) at 20 °C (68 °F) with pressure/vacuum conservation vents set as a minimum at + /–0.2 kPa (0.029 psi). These controls shall be operated at all times. An alternative air pollution control system may be used if it results in a greater emission reduction than these controls. Any alternative control system can only be allowed if approved by the Administrator as a SIP or FIP revision.

(ii) Stationary VOL storage containers with a capacity greater than 946 l (250 gal) shall be equipped with a submerged-fill pipe or bottom fill. These controls shall be operated at all times. An alternative control system can only be allowed if approved by the Administrator as a SIP or FIP revision.

(7) *Leaks*. The owner or operator of a paint or ink manufacturing plant shall,

for the purpose of detecting leaks, conduct an equipment monitoring program as set forth below:

(i) Each pump shall be checked by visual inspection each calendar week for indications of leaks, that is, liquids dripping from the pump seal. If there are indications of liquids dripping from the pump seal, the pump shall be repaired as soon as practicable, but no later than 15 calendar days after the leak is detected.

(ii) Any pump, valve, pressure relief valve, sampling connection, open-ended valve and flange or connector containing a fluid which is at least 10 percent VOM by weight which appears to be leaking on the basis of sight, smell or sound shall be repaired as soon as practicable, but no later than 15 calendar days after the leak is detected.

(iii) A weather proof, readily visible tag, in bright colors such as red or yellow, bearing an identification number and the date on which the leak was detected shall be attached to leaking equipment. The tag may be removed upon repair, that is, when the equipment is adjusted or otherwise altered to allow operation without leaking.

(iv) When a leak is detected, the owner or operator shall record the date of detection and repair and the record shall be retained at the plant for at least two years from the date of each detection or each repair attempt. The record shall be made available to any person upon verbal or written request during business hours.

(8) *Clean up.* (i) No person shall clean paint or ink manufacturing equipment with organic solvent unless the equipment being cleaned is completely covered or enclosed except for an opening no larger than necessary to allow safe clearance for proper operation of the cleaning equipment, considering the method and materials being used.

(ii) No person shall store organic wash solvent in other than closed containers, unless closed containers are demonstrated to be a safety hazard, or dispose of organic wash solvent in a manner such that more than 20 percent by weight is allowed to evaporate into the atmosphere.

(9) *Compliance schedule.* Every owner or operator of an emission source subject to the control requirements of paragraph (s) of this section shall comply with the requirements of paragraph (s) of this section on and after July 1, 1991.

(10) *Recordkeeping and reporting.* (i) Upon request by the Administrator, the owner or operator of an emission source which claims to be exempt from the requirements of paragraph (s) of this section shall submit records to the Administrator within 30 calendar days from the date of the request which document that the emission source is in fact exempt from paragraph (s) of this section. These records shall include (but are not limited to) the percent water (by weight) in the paint or ink being produced and the quantity of Magie oil, glycol and other solvents in the ink being produced.

(ii) Every owner or operator of an emission source which is subject to the requirements of paragraph (s) of this section shall maintain all records necessary to demonstrate compliance with those requirements at the facility for three years.

(t) [Reserved]

(u) *Miscellaneous fabricated product manufacturing processes*—(1) *Applicability.* (i) The requirements of paragraph (u) of this section shall apply to a plant's miscellaneous fabricated product manufacturing process emission sources which are not included within any of the source categories specified in subparts (B), (Q) (excluding sections 215.432 and 215.436), (R) (excluding sections 215.447, 215.450, and 215.452), (S), (V), (X), (Y) (sections 215.582, 215.583, and 215.584), or (Z) of 35 Ill. Adm. Code 215 (incorporated by reference as specified in 40 CFR 52.742), or specified in paragraph (d), (e), (h), (i), (j), or (q)(1) of this section; if the plant is subject to paragraph (u) of this section. A plant is subject to paragraph (u) of this section if it contains process emission sources, not regulated by subparts (B), (Q) (excluding sections 215.432 and 215.436), (R) (excluding sections 215.447, 215.450, and 215.452), (S), (V), (X), (Y) (sections 215.582, 215.583, 215.584), or (Z) of 35 Ill. Adm. Code 215 (incorporated by reference as specified in 40 CFR 52.742), or by paragraph (d), (e) (excluding paragraph (e)(1)(i)(L)), (h) (excluding paragraph (h)(5)), (i), (j),

or (q)(1) of this section; which as a group both:

(A) Have maximum theoretical emissions of 91 Mg (100 tons) or more per calendar year of VOM if no air pollution control equipment were used, and

(B) Are not limited to less than 91 Mg (100 tons) of VOM emissions per calendar year in the absence of air pollution control equipment, through production or capacity limitations contained in a federally enforceable construction permit or a SIP or FIP revision.

(ii) If a plant ceases to fulfill the criteria of paragraph (u)(1)(i) of this section, the requirements of paragraph (u) of this section shall continue to apply to a miscellaneous fabricated products manufacturing process emission source which was ever subject to the control requirements of paragraph (u)(3) of this section.

(iii) No limits under paragraph (u) of this section shall apply to emission sources with emissions of VOM to the atmosphere less than or equal to 0.91 Mg (1.0 ton) per calendar year if the total emissions from such sources not complying with paragraph (u)(3) of this section does not exceed 4.5 Mg (5.0 tons) per calendar year.

(iv) For the purposes of paragraph (u) of this section, an emission source shall be considered regulated by a subpart (of the Illinois rules) or paragraph if it is subject to the limits of that subpart (of the Illinois rules) or paragraph. An emission source is not considered regulated by a subpart (of the Illinois rules) or paragraph if its emissions are below the applicability cutoff level or if the source is covered by an exemption.

(v) For the purposes of paragraph (u) of this section, uncontrolled VOM emissions are the emissions of VOM which would result if no air pollution control equipment were used.

(2) *Permit conditions.* No person shall violate any condition in a permit when the condition results in exclusion of the plant or an emission source from paragraph (u) of this section.

(3) *Control requirements.* Every owner or operator of an emission source subject to paragraph (u) of this section shall comply with the requirements of paragraph (u)(3) (i), (ii) or (iii) of this section:

(i) Emission capture and control techniques which achieve an overall reduction in uncontrolled VOM emissions of at least 81 percent, or

(ii) For coating lines, the daily-weighted average VOM content shall not exceed 0.42 kg VOM/l (3.5 lbs VOM/gal) of coating as applied (minus water and any compounds which are specifically exempted from the definition of VOM) during any day. Owners and Code 215 (incorporated by reference as specified in 40 CFR 52.742), or

(iii) An alternative control plan which has been approved by the Administrator as a SIP or FIP revision.

(4) *Compliance schedule.* Every owner or operator of an emission source subject to the control requirements of paragraph (u) of this section shall comply with the requirements of paragraph (u) of this section on and after July 1, 1991.

(5) *Testing.* Any owner or operator of a VOM emission source which is subject to paragraph (u) of this section shall demonstrate compliance with paragraph (u)(3) of this section by using the applicable test methods and procedures specified in paragraph (a)(4) of this section.

(6) The control requirements in this paragraph apply to the adhesive globe coating operations at Replogle's Broadview facility in Cook County, Illinois, instead of the control requirements in paragraph (u)(3) of this section.

(i) After October 6, 1991, no coatings shall at any time be applied which exceed the following emission limitations for the specified coating.

(A) 7.0 lbs VOM per gallon of adhesive coating (minus water and any compounds which are specifically exempted from the definition of VOM) as applied to coat globes. Such coating consists of #7879446 Methylene Chloride (RGI #01004100). The Administrator shall be notified at least ten (10) days prior to the use of any replacement adhesive for coating globes.

(B) [Reserved]

(ii) After October 6, 1991, the volume of coatings used shall not exceed the following:

(A) 572 gallons per year total for all coatings specified in paragraph (u)(6)(i)(A) of this section. The yearly volume of coatings used are to be calculated as follows:

(*1*) Compute the volume of specified coating used each month by the 15th of the following month.

(*2*) By the 15th of each month, add the monthly coating use for the 12 previous months (to obtain the yearly volume of coatings used).

(B) [Reserved]

(iii) Beginning on October 6, 1991, the owner and operator of the Replogle Globes, Inc. plant in Broadview, Illinois shall keep the following records for each month. All records shall be retained at Replogle Globes, Inc. for three (3) years and shall be made available to the Administrator on request:

(A) The name and identification number of each coating as applied on any adhesive globe coating line.

(B) The weight of VOM per volume and the volume of each coating (minus water and any compounds which are specifically exempted from the definition of VOM) as applied each month on any adhesive globe coating line.

(7) The control requirements in this paragraph apply to the glass candle container coating line(s) and silk screening machines at the Candle Corporation of America (CCA), Chicago, Illinois facility, instead of the control requirements in paragraph (u)(3) of this section.

(i) After June 1, 1992, no coatings or inks shall at any time be applied, at any coating or ink applicator, which exceed the following emission limitations for the specified coating or ink.

(A) 6.04 pounds (lbs) volatile organic material (VOM) per gallon of clear lacquer/varnish (minus water and any compounds which are specifically exempted from the definition of VOM) as applied to coat glass candle containers. Such clear lacquer/varnish (multicolor) is identified as LP3500. The Administrator must be notified at least 10 days prior to the use of any replacement clear lacquers/varnishes.

(B) 5.23 lbs VOM per gallon of translucent coating (minus water and any compounds which are specifically exempted from the definition of VOM) as applied to coat glass candle containers. Such translucent coating (multi-color) is identified as LP3603. The Administrator must be notified at least 10 days prior to the use of any replacement translucent coatings.

(C) 5.84 lbs VOM per gallon of white lacquer (minus water and any compounds which are specifically exempted from the definition of VOM) as applied to coat glass candle containers. Such white lacquer is identified as LP3507. The Administrator must be notified at least 10 days prior to the use of any replacement white lacquers.

(D) 3.40 lbs VOM per gallon of fast dry enamel silk screen printing ink (minus water and any compounds which are specifically exempted from the definition of VOM) as applied to print onto glass candle containers.

(ii) After June 1, 1992, the volume of coating and ink used shall not exceed the following:

(A) 2,164 gallons per month total for all coatings specified in paragraph (u)(7)(i)(A) of this section.

(B) 369 gallons per month total for all coatings specified in paragraph (u)(7)(i)(B) of this section.

(C) 49 gallons per month total for all coatings specified in paragraph (u)(7)(i)(C) of this section.

(D) 50 gallons per month total for all inks specified in paragraph (u)(7)(i)(D) of this Section.

(iii) Beginning on June 1, 1992, the owner and operator of CCA's plant in Chicago, Illinois, shall keep the following records for each month. All records shall be retained at CCA for 3 years and shall be made available to the Administrator on request.

(A) The name and identification number of each coating and ink as applied on any glass candle container coating line or silk screening machine.

(B) The weight of VOM per volume and the volume of each coating and ink (minus water and any compounds which are specifically exempted from the definition of VOM) as applied each month on any glass candle container coating line or silk screening machine.

(iv) After June 1, 1992, no more than 100 gallons per month of cleaning solvent is allowed to be used on the glass candle container coating line(s) at CCA. The only cleaning solvents allowed for use are acetone (identified as

LP3525) and methyl ethyl ketone (identified as LP3520). Beginning on June 1, 1992, CCA shall keep monthly records of the type and volume of all cleaning solvents used. All such records shall be retained at CCA for 3 years and shall be made available to the Administrator on request.

(v) After June 1, 1992, no more than 50 gallons per month of cleaning solvent is allowed to be used on the glass candle container silk screening machines at CCA. The only cleaning solvent allowed for use is petroleum naphtha (identified as light aromatic naphtha with 7.28 lbs VOM per gallon, minus water and any compounds which are specifically exempted from the definition of VOM). Beginning on June 1, 1992, CCA shall keep monthly records of the type and volume and the weight of VOM per volume (minus water and any compounds which are specifically exempted from the definition of VOM) of all cleaning solvents used on the glass candle container silk screening machines. All such records shall be retained at CCA for 3 years and shall be made available to the Administrator on request.

(8) The control, recordkeeping and reporting requirements in this paragraph apply to the cellulose food casing manufacturing operations at the Viskase Corporation plant in Bedford Park, Illinois (Cook County) instead of the requirements in paragraph (v) of this section, the other parts of paragraph (u) of this section, and the recordkeeping requirements in paragraph (y) of this section. Unless otherwise stated, the following requirements must be met by Viskase on and after November 21, 1995.

(i) VOM emissions shall never exceed 3.30 tons per day.

(ii) VOM emissions shall not exceed 2.22 tons per day, on a monthly average, during June, July, and August.

(iii) VOM emissions shall not exceed 2.44 tons per day during June, July, and August.

(iv) Compliance with the emission limits in paragraphs (u)(8) (i) through (iii) of this section, and the records in paragraph (u)(8)(v) of this section, shall be determined using an emission factor of ''0.72 pounds of VOM emissions per pound of carbon disulfide consumed.''

(v) Viskase must keep the following daily records:

(A) The pounds of carbon disulfide per charge for its Fibrous process. If charges with different levels of carbon disulfide per charge are used the same day, a separate record must be kept for each level of carbon disulfide per charge.

(B) The pounds of carbon disulfide per charge for its NOJAX process. If charges with different levels of carbon disulfide per charge are used the same day, a separate record must be kept for each level of carbon disulfide per charge.

(C) The number of charges per day, for each level of carbon disulfide per charge, used in Viskase's Fibrous process.

(D) The number of charges per day, for each level of carbon disulfide per charge, used in Viskase's NOJAX process.

(E) The total quantity of carbon disulfide used per day in Viskase's Fibrous process, the total quantity of carbon disulfide used per day in Viskase's NOJAX process, and the daily VOM emissions resulting from use of the carbon disulfide.

(F) The monthly use of carbon disulfide, and the monthly VOM emissions resulting from use of the carbon disulfide, during June, July, and August.

(vi) Any violation of the emission limits in paragraphs (u)(8) (i) through (iii) of this section must be reported to USEPA within 30 days of its occurrence.

(vii) In order to determine daily and monthly VOM emissions, the test methods in paragraph (a)(4) of this section may be used in addition to, and take precedence over, the emission factor cited in paragraph (u)(8)(iv) of this section. Method 15 is to be used instead of Methods 18, 25, and 25A when the test methods in paragraph (a)(4) of this section are used to determine VOM emissions from Viskase's cellulose food casing facility.

(v) *Miscellaneous formulation manufacturing processes*—(1) *Applicability*. (i) The requirements of paragraph (v) of this section shall apply to a plant's miscellaneous formulation manufacturing process emission sources, which are not included within any of the

source categories specified in subpart (B), (Q) (excluding sections 215.432 and 215.436), (R) (excluding sections 215.447, 215.450, and 215.452),(S), (V), (X), (Y) (sections 215.582, 215.583, and 215.584), or (Z) of 35 Ill. Adm. Code 215 (incorporated by reference as specified in 40 CFR 52.742), or specified in paragraph (d), (e), (h), (i), (j), or (q)(1) of this section; if the plant is subject to paragraph (v) of this section. A plant is subject to paragraph (v) of this section if it contains process emission sources, not regulated by subpart (B), (Q) (excluding sections 215.432 and 215.436), (R) (excluding sections 215.447, 215.450, and 215.452), (S), (V), (X), (Y) (sections 215.582, 215.583, and 215.584), or (Z) of 35 Ill. Adm. Code 215 (incorporated by reference as specified in 40 CFR 52.742), or by paragraph (d), (e) (excluding paragraph (e)(1)(i)(L)), (h) (excluding paragraph (h)(5)), (i), (j), or (q)(1) of this section; which as a group both:

(A) Have maximum theoretical emissions of 91 Mg (100 tons) or more per calendar year of VOM if no air pollution control equipment were used, and

(B) Are not limited to less than 91 Mg (100 tons) of VOM emissions per calendar year in the absence of air pollution control equipment, through production or capacity limitations contained in a federally enforceable construction permit or a SIP or FIP revision.

(ii) If a plant ceases to fulfill the criteria of paragraph (v)(1)(i) of this section, the requirements of paragraph (v) of this section shall continue to apply to a miscellaneous formulation manufacturing process emission source which was ever subject to the control requirements of paragraph (v)(3) of this section.

(iii) No limits under paragraph (v) of this section shall apply to emission sources with emissions of VOM to the atmosphere less than or equal to 2.3 Mg (2.5 tons) per calendar year if the total emissions from such sources not complying with paragraph (v)(3) of this section does not exceed 4.5 Mg (5.0 tons) per calendar year.

(iv) For the purposes of paragraph (v) of this section, an emission source shall be considered regulated by a subpart (of the Illinois rules) or paragraph if it is subject to the limits of that subpart (of the Illinois rules) or paragraph. An emission source is not considered regulated by a subpart (of the Illinois rules) or paragraph if its emissions are below the applicability cutoff level or if the source is covered by an exemption.

(v) For the purposes of paragraph (v) of this section uncontrolled VOM emissions are the emissions of VOM which would result if no air pollution control equipment were used.

(2) *Permit conditions.* No person shall violate any condition in a permit when the condition results in exclusion of the plant or an emission source from paragraph (v) of this section.

(3) *Control requirements.* Every owner or operator of an emission source subject to paragraph (v) of this section shall comply with the requirements of paragraph (v)(3) (i) or (ii) of this section.

(i) Emission capture and control techniques which achieve an overall reduction in uncontrolled VOM emissions of at least 81 percent, or

(ii) An alternative control plan which has been approved by the Administrator as a SIP or FIP revision.

(4) *Compliance schedule.* Every owner or operator of an emission source subject to the control requirements of paragraph (v) of this section shall comply with the requirements of paragraph (v) of this section on and after July 1, 1991.

(5) *Testing.* Any owner or operator of a VOM emission source which is subject to paragraph (v) of this section shall demonstrate compliance with paragraph (v)(3) of this section by using the applicable test methods and procedures specified in paragraph (a)(4) of this section.

(6) The control requirements in this paragraph apply to the 7 blenders and 3 moguls of the adhesive coating solution formulation (compounding) operations at the Minnesota Mining and Manufacturing Corporation's (3M) Bedford Park facility in Cook County, Illinois, instead of the control requirements in paragraph (v)(3) of this section.

(i) After September 1, 1991, the following operating restrictions shall apply to 3M's Bedford Park, Illinois, compounding operations.

(A) The combined operating hours for all blenders shall not exceed 8,400 hours per quarter (rolled on a monthly basis). The combined quarterly operating hours of all blenders are to be calculated as follows:

(*1*) By the 15th of each month, compute the combined monthly operating hours of all blenders during the previous month.

(*2*) By the 15th of each month, add the monthly operating hours of all blenders for the 3 previous months (to obtain the combined quarterly operating hours of all blenders).

(B) The combined operating hours for all moguls shall not exceed 4,200 hours per quarter (rolled on a monthly basis). The quarterly operating hours of all moguls are to be calculated as follows:

(*1*) By the 15th of each month, compute the combined monthly operating hours of all moguls during the previous month.

(*2*) By the 15th of each month, add the monthly operating hours of all moguls for the 3 previous months (to obtain the combined quarterly operating hours of all moguls).

(ii) Beginning on September 1, 1991, the owner and operator of the 3M Bedford Park Plant in Bedford Park, Illinois, shall keep the following records. These records shall be compiled on a monthly basis, be retained at the 3M facility for a period of 3 years, and be made available to the Administrator upon request.

(A) Separate monthly records for each of the 7 blenders identifying each batch and the length of each batch as well as the total monthly hours of operation for all blenders.

(B) Separate monthly records for each of the 3 moguls identifying each batch and the length of each batch as well as the total monthly hours of operation for all moguls.

(w) *Miscellaneous organic chemical manufacturing processes*—(1) *Applicability*. (i) The requirements of paragraph (w) of this section shall apply to a plant's miscellaneous organic chemical manufacturing process emission sources which are not included within any of the source categories specified in subparts (B), (Q) (excluding sections 215.432 and 215.436), (R) (excluding sections 215.447, 215.450, and 215.452), (S), (V), (X), (Y) (sections 215.582, 215.583, and 215.584), or (Z) of 35 Ill. Adm. Code 215 (incorporated by reference as specified in 40 CFR 52.742), or specified in paragraph (d), (e), (h), (i), (j), or (q)(1) of this section; if the plant is subject to paragraph (w) of this section. A plant is subject to paragraph (w) of this section if it contains process emission sources, not regulated by subparts (B), (Q) (excluding sections 215.432 and 215.436), (R) (excluding sections 215.447, 215.450, and 215.452), (S), (V), (X), (Y) (sections 215.582, 215.583, and 215.584), or (Z) of 35 Ill. Adm. Code 215 (incorporated by reference as specified in 40 CFR 52.742), or by paragraph (d), (e) (excluding paragraph (e)(1)(i)(L)), (h) (excluding paragraph (h)(5)), (i), (j), or (q)(1) of this section; which as a group both:

(A) Have maximum theoretical emissions of 91 Mg (100 tons) or more per calendar year of VOM if no air pollution control equipment were used, and

(B) Are not limited to less than 91 Mg (100 tons) of VOM emissions per calendar year in the absence of air pollution control equipment, through production or capacity limitations contained in a federally enforceable construction permit or a SIP or FIP revision.

(ii) If a plant ceases to fulfill the criteria of paragraph (w)(1)(i) of this section, the requirements of paragraph (w) of this section shall continue to apply to a miscellaneous organic chemical manufacturing process emission source which was ever subject to the control requirements of paragraph (w)(3) of this section.

(iii) No limits under paragraph (w) of this section shall apply to emission sources with emissions of VOM to the atmosphere less than or equal to 0.91 Mg (1.0 ton) per calendar year if the total emissions from such sources not complying with paragraph (w)(3) of this section does not exceed 4.5 Mg (5.0 tons) per calendar year.

(iv) For the purposes of paragraph (w) of this section, an emission source shall be considered regulated by a subpart (of the Illinois rules) or paragraph if it is subject to the limits of that subpart (of the Illinois rules) or paragraph. An emission source is not considered regulated by a subpart (of the Illinois

rules) or paragraph if its emissions are below the applicability cutoff level or if the source is covered by an exemption.

(v) For the purposes of paragraph (w) of this section, uncontrolled VOM emissions are the emissions of VOM which would result if no air pollution control equipment were used.

(2) *Permit conditions.* No person shall violate any condition in a permit when the condition results in exclusions of the plant or an emission source from paragraph (w) of this section.

(3) *Control requirements.* Every owner or operator of an emission source subject to paragraph (w) of this section shall comply with the requirements of paragraph (w)(3)(i) or (ii) of this section.

(i) Emission capture and control techniques which achieve an overall reduction in uncontrolled VOM emissions of at least 81 percent, or

(ii) An alternative control plan which has been approved by the Administrator as a SIP or FIP revision.

(4) *Compliance schedule.* Every owner or operator of an emission source subject to the control requirements of paragraph (w) of this section shall comply with the requirements of paragraph (w) of this section on and after July 1, 1991.

(5) *Testing.* Any owner or operator of a VOM emission source which is subject to paragraph (w) shall demonstrate compliance with paragraph (w)(3) of this section by using the applicable test methods and procedures specified in paragraph (a)(4) of this section.

(x) *Other emission sources*—(1) *Applicability.* (i) The requirements of paragraph (x) of this section shall apply to a plant's VOM emission sources, which are not included within any of the source categories specified in subpart (B), (Q) (excluding sections 215.432 and 215.436), (R) (excluding sections 215.447, 215.450, and 215.452), (S), (V), (X), (Y) (sections 215.582, 215.583, and 215.584), or (Z) of 35 Ill. Adm. Code 215 (incorporated by reference as specified in 40 CFR 52.742), or specified in paragraph (d), (e), (h), (i), (j), (q)(1), (s), (u), (v) or (w) of this section; if the plant is subject to paragraph (x) of this section. A plant is subject to paragraph (x) of this section if it contains process emission sources, not regulated by subpart (B), (Q) (excluding sections 215.432 and 215.436), (R) (excluding sections 215.447, 215.450, and 215.452), (S), (V), (X), (Y) (sections 215.582, 215.583, and 215.584), or (Z) of 35 Ill. Adm. Code 215 (incorporated by reference as specified in 40 CFR 52.742), or by paragraph (d), (e) of this section (excluding paragraph (e)(1)(i)(L)), (h) (excluding paragraph (h)(5)), (i), (j), or (q)(1) of this section; which as a group both:

(A) Have maximum theoretical emissions of 91 Mg (100 tons) or more per calendar year of VOM if no air pollution control equipment were used, and

(B) Are not limited to less than 91 Mg (100 tons) of VOM emissions per calendar year in the absence of air pollution control equipment, through production or capacity limitations contained in a federally enforceable construction permit or a SIP of FIP revision.

(ii) If a plant ceases to fulfill the criteria of paragraph (x)(1)(i) of this section, the requirements of paragraph (x) of this section shall continue to apply to an emission source which was ever subject to the control requirements of paragraph (x)(3) of this section.

(iii) No limits under paragraph (x) of this section shall apply to emission sources with emissions of VOM to the atmosphere less than or equal to 2.3 Mg (2.5 tons) per calendar year if the total emissions from such sources not complying with paragraph (x)(3) of this section does not exceed 4.5 Mg (5.0 tons) per calendar year.

(iv) For the purposes of paragraph (x) of this section, an emission source shall be considered regulated by a subpart (of the Illinois rules) or paragraph if it is subject to the limits of that subpart (of the Illinois rules) or paragraph. An emission source is not considered regulated by a subpart (of the Illinois rules) or paragraph of its emissions are below the applicability cutoff level or if the source is covered by an exemption.

(v) The control requirements in paragraphs (u), (v), (w), and (x) of this section shall not apply to sewage treatment plants, vegetable oil processing plants, coke ovens (including by-product recovery plants), fuel combustion

sources, bakeries, barge loading facilities, jet engine test cells, pharmaceutical manufacturing, production of polystyrene foam insulation board (including storage and extrusion of scrap where blowing agent is added to the polystyrene resin at the plant), production of polystyrene foam packaging (*not* including storage and extrusion of scrap where blowing agent is added to the polystyrene resin at the plant), and iron and steel production.

(2) *Permit conditions.* No person shall violate any condition in a permit when the condition results in exclusion of the plant or an emission source from paragraph (x) of this section.

(3) *Control requirements.* Every owner or operator of an emission source subject to paragraph (x) of this section shall comply with the requirements of paragraph (x)(3) (i), (ii) or (iii) of this section.

(i) Emission capture and control equipment which achieve an overall reduction in uncontrolled VOM emissions of at least 81 percent, or

(ii) For coating lines, the daily-weighted average VOM content shall not exceed 0.42 kg VOM/l (3.5 lbs VOM/gal) of coating (minus water and any compounds which are specifically exempted from the definition of VOM) as applied during any day. Owners and operators complying with this paragraph are not required to comply with section 215.301 of 35 Ill. Adm. Code 215 (incorporated by reference as specified in 40 CFR 52.742), or

(iii) An alternative control plan which has been approved by the Administrator as a SIP or FIP revision.

(4) *Compliance schedule.* Every owner or operator of an emissions source which is subject to paragraph (x) of this section shall comply with the requirements of paragraph (x) of this section on and after July 1, 1991.

(5) *Testing.* Any owner or operator of a VOM emission source which is subject to paragraph (x) of this section shall demonstrate compliance with paragraph (x)(3) of this section by using the applicable test methods and procedures specified in paragraph (a)(4) of this section.

(6) The control requirements in this paragraph apply to the varnish operations at the General Motors Corporation, Electro-Motive Division Plant (GMC Electro-Motive), LaGrange, Illinois, instead of the control requirements in paragraph (x)(3) of this section.

(i) After July 1, 1991, no coatings shall at any time be applied which exceed the following emission limitations for the specified coating.

(A) 8.0 lbs VOM per gallon of coating (minus water and any compounds which are specifically exempted from the definition of VOM) as applied at each coating applicator to coat Nomex rings. Such coating consists of Monsanto Skybond 705 Polyamide Resin (EMD P/N 9088817) and diluents. The Administrator must be notified at least 10 days prior to the use of any replacement coating(s) and/or diluents for coating Nomex rings.

(B) 6.8 lbs VOM per gallon of coating (minus water and any compounds which are specifically exempted from the definition of VOM) as applied at each coating applicator for any coatings not specified in paragraph (x)(6)(i)(A) of this section.

(ii) After July 1, 1991, the volume of coatings used shall not exceed the following:

(A) 600 gallons per year total for all coatings specified in paragraph (x)(6)(i)(A) of this section. The yearly volume of coatings used are to be calculated as follows:

(1) Compute the volume of specified coating used each month by the 15th of the following month.

(2) By the 15th of each month, add the monthly coating use for the 12 previous months (to obtain the yearly volume of coatings used).

(B) 28,500 gallons per year total for all coatings other than those specified in paragraph (x)(6)(i)(A) of this section. The yearly volume of coatings used are to be calculated as specified in paragraphs (x)(6)(ii)(A)(1) and (x)(6)(ii)(A)(2) of this section.

(iii) Beginning on July 1, 1991, the owner and operator of the General Motors Corporation Electro-Motive Division Plant in LaGrange, Illinois shall keep the following records for each month. All records shall be retained at General Motors for 3 years and shall be made available to the Administrator on request.

(A) The name and identification number of each coating as applied on any coating line within the varnish operation.

(B) The weight of VOM per volume and the volume of each coating (minus water and any compounds which are specifically exempted from the definition of VOM) as applied each month on any coating line within the varnish operation.

(7) The control, recordkeeping, and monitoring requirements in this paragraph apply to the aluminum rolling mills at the Reynolds Metals Company's McCook Sheet & Plate Plant in McCook, Illinois (Cook County) instead of the control requirements and test methods in the other parts of paragraph (x), and the recordkeeping requirements in paragraph (y) of this section. All of the following requirements must be met by Reynolds on and after July 7, 1995.

(i) Only organic lubricants with initial and final boiling points between 460 degrees F and 635 degrees F, as determined by a distillation range test using ASTM method D86–90, are allowed to be used at Reynolds' aluminum sheet cold rolling mills numbers 1 and 7. All incoming shipments of organic lubricant for the number 1 and 7 mills must be sampled and each sample must undergo a distillation range test to determine the initial and final boiling points using ASTM method D86–90. A grab rolling lubricant sample shall be taken from each operating mill on a monthly basis and each sample must undergo a distillation range test, to determine the initial and final boiling points, using ASTM method D86–90.

(ii) An oil/water emulsion, with no more than 15 percent by weight of petroleum-based oil and additives, shall be the only lubricant used at Reynolds' aluminum sheet and plate hot rolling mills, 120 inch, 96 inch, 80 inch, and 145 inch mills. A grab rolling lubricant sample shall be taken from each operating mill on a monthly basis and each sample shall be tested for the percent by weight of petroleum-based oil and additives by ASTM Method D95–83.

(iii) The temperature of the inlet supply of rolling lubricant for aluminum sheet cold rolling mills numbers 1 and 7 shall not exceed 150 °F, as measured at or after (but prior to the lubricant nozzles) the inlet sump. The temperature of the inlet supply of rolling lubricant for the aluminum sheet and plate hot rolling mills, 120 inch, 96 inch, 80 inch, and 145 inch mills shall not exceed 200 °F, as measured at or after (but prior to the lubricant nozzles) the inlet sump. Coolant temperatures shall be monitored at all the rolling mills by use of thermocouple probes and chart recorders or electronic data recorders.

(iv) All distillation test results for cold mill lubricants, all percent oil test results for hot mill lubricants, all coolant temperature recording charts and/or temperature data obtained from electronic data recorders, and all oil/water emulsion formulation records, shall be kept on file, and be available for inspection by USEPA, for three years.

(8) The control and recordkeeping requirements in this paragraph apply to the silk screen presses and associated ovens, cleaning operations and laminators at Parisian's Novelty Company (Parisian), Chicago, Illinois, facility, instead of the control requirements in paragraphs (x)(8) (u)(3) and (x)(3) of this section and the recordkeeping requirements in paragraph (x)(8)(y) of this section.

(i) After March 1, 1993, no coatings or inks shall at any time be applied, at any coating or ink applicator, which exceed the following emission limitations for the specified coating or ink.

(A) 6.65 pounds (lbs) volatile organic material (VOM) per gallon of ink (minus water and any compounds which are specifically exempted from the definition of VOM) as applied on Parisian's silk screen presses.

(B) 6.4 lbs VOM per gallon of adhesive coating (minus water and any compounds which are specifically exempted from the definition of VOM) as applied on Parisian's laminators. Such adhesive is identified as MIX #963.

(ii) After March 1, 1993, the volume of coating and ink used shall not exceed the following:

(A) 2,556 gallons per year total for all inks. The yearly volume of inks used is to be calculated as follows:

(*1*) Compute the volume of ink used each month by the 15th of the following month.

(*2*) By the 15th of each month, add the monthly ink usage for the 12 previous months (to obtain the yearly volume of ink used).

(B) 780 gallons per year total for all coatings specified in paragraph (x)(8)(i)(B) of this section. The yearly volume of coatings used are to be calculated as specified in paragraphs (x)(8)(ii)(A)(*1*) and (x)(8)(ii)(A)(*2*) of this section.

(iii) Beginning on March 1, 1993, the owner and operator of Parisian's plant in Chicago, Illinois, shall keep the following records for each month. All records shall be retained at Parisian for 3 years and shall be made available to the Administrator on request.

(A) The name and identification number of each coating as applied on any laminator.

(B) The weight of VOM per volume and the volume of each coating (minus water and any compounds which are specifically exempted from the definition of VOM) as applied each month on any laminator.

(C) The weight of VOM per volume and the volume of each type of ink (minus water and any compounds which are specifically exempted from the definition of VOM) as applied each month on any screen press.

(iv) After March 1, 1993, no more than 84 gallons per year of denatured alcohol may be used for cleaning labels at Parisian. The yearly volume of denatured alcohol used is to be calculated as specified in paragraphs (x)(8)(ii)(A)(*1*) and (x)(8)(ii)(A)(*2*) of this section. Beginning on March 1, 1993, Parisian shall keep monthly records of the type, volume, and VOM content of all solvents used for label cleaning. These records shall be retained at Parisian for 3 years and shall be made available to the Administrator on request.

(v) After March 1, 1993, no more than 7,932 gallons per year of screen wash #956 may be used on Parisian's screen cleaner. The yearly volume of screen wash #956 used is to be calculated as specified in paragraphs (x)(8)(ii)(A)(*1*) and (x)(8)(ii)(A)(*2*) of this section. Beginning on March 1, 1993, Parisian shall keep monthly records of the type, volume, and VOM content of all cleaning compounds used on Parisian's screen cleaner. These records shall be retained at Parisian for 3 years and shall be made available to the Administrator on request.

(vi) After March 1, 1993, only those cleaners specifically identified in paragraphs (x)(8)(iv) and (x)(8)(v) of this section may be used at Parisian.

(9) The control requirements in this paragraph apply to the process sources listed in paragraph (x)(9)(i)(A) of this section at the Nalco Chemical Company facility in Bedford Park, Illinois, instead of the control requirements in paragraph (x)(3) of this section.

(i) *Production and Operation Restrictions*.

(A) On and after October 1, 1992, the maximum volatile organic compound (VOC) emissions per batch, the 12-month rolling average number of batches per year, and the peak limit of batches per month shall not exceed the following limits:

Source	Maximum VOC emissions, lb/batch	12-mo. rolling average limit batch/yr	Peak batch limit, batch/month
(*1*) System 1 charge	0.16	280	33
System 1 purge	1.35.		
(*2*) 24–T–156, 157	2.60	300	33
(*3*) 28–T–217, 234	0.23	402	45
(*4*) 28–T–214–216	5.70	603	65
(*5*) 20–R–182, 185	0.02	72	8
(*6*) 20–R–130	0.07	340	38
(*7*) 20–R–155	0.21	254	29
(*8*) 20–WT–174	0.21	254	29
(*9*) 12–T–97–99	4.6E–4 lb/hr	8,760 hr/yr	744 hr/mo
(*10*) 12–T–95	4.0E–6 lb/hr	8,760 hr/yr	744 hr/mo
(*11*) 12–T–96	7.7E–5 lb/hr	8,760 hr/yr	744 hr/mo
(*12*) 12–T–67, 73	0.003 lb/hr	8,760 hr/yr	744 hr/mo
(*13*) 20–T–121–122	0.85	312	34
(*14*) 20–T–123–125	5.4	616	68
(*15*) 20–T–140, 142	8.0	600	65
(*16*) 20–T–159	0.31	416	46

Source	Maximum VOC emissions, lb/batch	12-mo. rolling average limit batch/yr	Peak batch limit, batch/month
(*17*) 20–R–193, 200	9.8	540	59
(*18*) 32–R–300	0.18	365	41
(*19*) 32–T–302	0.21	365	41
(*20*) 32–T–304	0.21	730	81
(*21*) 32–T–314	0.23	365	41
(*22*) 32–T–322	0.21	365	41
(*23*) 32–T–328	0.23	365	41
(*24*) 10–T–61	0.001	365—containing organic	31—containing organic
(*25*) 24–T–441, 166	0.12	730	81
(*26*) 25–T–284, 440, 443–444.	0.28	730	81
(*27*) 25–T–170	4E–6	104	12
(*28*) Tank truck loading	0.12 lb/truck	1,600 trucks/yr	134 trucks/mo
(*29*) System 2	0.36	280	33
(*30*) System 4	2.88	280	33
(*31*) 25–R–164	0.10	365	41
(*32*) 25–R–205	0.14	365	41
(*33*) Drum station	3.51	1,005	110
(*34*) V–4SAC	1.56	254	29
(*35*) 20–CT–155	13.90	254	29
(*36*) 12–SE–100	1.10 lb/hr	8,760 hr/yr	744 hr/mo
(*37*) Drum exhaust hood A	1.00	365—involving use of organic material	31—involving use of organic material
(*38*) 24–T–230	0.98	730	81
(*39*) 8–CT–1	0.002 lb/hr	8,760 hr/yr	744 hr/mo
(*40*) 9–CT–1	0.002 lb/hr	8,760 hr/yr	744 hr/mo
(*41*) 10–CT–1	0.005 lb/hr	8,760 hr/yr	744 hr/mo
(*42*) 22–CT–1	0.003 lb/hr	8,760 hr/yr	744 hr/mo
(*43*) 25–CT–1	0.005 lb/hr	8,760 hr/yr	744 hr/mo
(*44*) 25–CT–2	0.002 lb/hr	8,760 hr/yr	744 hr/mo
(*45*) 29–CT–1	0.002 lb/hr	8,760 hr/yr	744 hr/mo
(*46*) 32–CT–1	0.005 lb/hr	8,760 hr/yr	744 hr/mo
(*47*) 36–CT–1	0.002 lb/hr	8,760 hr/yr	744 hr/mo
(*48*) 32–T–325	0 [a]	365	41
(*49*) 26–R–195	0.1 [a]	365	41
(*50*) Continuous polymer-blending.	0.1 lb/hr [a]	2,000 hr/yr.	
(*51*) Portafeed washer booth 1.	0.84 lb/hr [b]	4,160 hr/yr	744 hr/mo
(*52*) Portafeed washer booth 2.	0.84 lb/hr [b]	8,736 hr/yr	744 hr/mo
(*53*) 32–T–392	4.4E–7	104	12

[a] Assumed value.
[b] Based on monitoring data.

(B) The following equation shall be used to calculate maximum VOC emissions per batch for the process sources listed in paragraphs (x)(9)(i)(A)(*1*) (charge only and (*2*) through (*28*) and (*53*) of this section:

$$ER(lb/batch) = \frac{Q_O(gal/batch) \times M_V(lb/mole) \times P(mmHg)}{constant_1([gal][mmHg]/mole)}$$

Where:

ER = VOC emission rate;

Q_o = Quantity of organic per batch or charge rate;

M_v = Molecular weight of the volatile component;

P = Partial pressure of the volatile component for mixtures of liquid made up with more than one chemical; or vapor pressure for pure liquids made up of only one organic chemical; and

$Constant_1$ = (7.45 gal/ft^3) × (385 ft^3/mole)x(760 mmHg).

(C) The following equation shall be used to calculate the VOC emissions per batch from the process sources listed in paragraph (x)(9)(i)(A)(*1*) of this

section (purge only) and (*29*) through (*32*) of this section:

$$ER(lb/batch) = \frac{PR(ft^3/batch) \times M_V(lb/mole) \times P(mmHg)}{constant_2([ft^3][mmHg]/mole)}$$

Where:

PR = Nitrogen purge rate; and

$Constant_2$ = (385 ft^3/mole) × (760 mmHg).

(D) The following equation shall be used to calculate the VOC emissions per batch from the drum station listed at paragraph (x)(9)(i)(A)(*33*) of this section:

ER(1b/batch) = (0.40 × [$ER_{28\text{-}T\text{-}217\text{-}218}$]) + (0.60 × [$ER_{28\text{-}T\text{-}214\text{-}216}$])

(E) The following equation shall be used to calculate the VOC emissions per batch from the V–4SAC listed at paragraph (x)(9)(i)(A)(*34*) of this section:

$$ER(lb/batch) = \frac{FR_{1mmHg}(lb/batch) \times M_V(lb/mole) \times P_{V2}(mmHg)}{M_a(lb/mole) \times (760 - P_{V2})(mmHg)}$$

Where:

FR_{1mmHg} = Maximum air flow rate to maintain 1 mmHg;

M_a = Molecular weight of air; and

P_{v2} = Vapor pressure of organic at 65 °F and 760 mmHg.

(F) The following equation shall be used to calculate the VOC emissions per batch from 20–CT–155 listed at paragraph (x)(9)(i)(A)(*35*) of this section:

$$ER(lb/batch) = \left[ER_{tot}(lb/hr) - ER_{V-4SAC}(lb/hr)\right] \times hr/batch$$

Where:

ER_{tot} = Total system emission rate calculated using the following equation:

$$ER_{tot}(lb/hr) = \frac{FR_{1mmHg}(lb/hr) \times M_V(lb/mole) \times P_{V1}(mmHg)}{M_a(lb/mole) \times (350 - P_{V1})(mmHg)}$$

Where:

P_{v1} = Vapor pressure of organic at 200 °F and 350 mmHg.

(G) The following equation shall be used to calculate the VOC emissions per hour from 12–SE–100 listed at paragraph (x)(9)(i)(A)(*36*) of this section:

ER(lb/hr) = Evap (gm/cm^2 sec) × area (cm^2) × 3600 sec/hr

Where:

Evap = Evaporation rate from a surface 8.93 cm × 8.9 cm (lb/[cm^2] [sec]) calculated using the following equation:

Evap = 10^{-7} M_v0.71 × [0.034 $(P_e - P_d)^{1.25}$ + 156 $(P_e - P_d)$]

Where:

P_e = Partial pressure of the component from the spilled liquid;

P_d = Partial pressure of the component in the incident air stream, assumed to be 0 mmhg; and
Area = Surface area of the liquid.

(H) The following equation shall be used to calculate the VOC emissions per batch from the drum exhaust hood A listed at paragraph (x)(9)(i)(A)(*37*) of this section:

$$ER(lb/batch) = \frac{FR(ft^3/batch) \times M_V(lb/mole) \times P(mmHg)}{constant_2\left([ft^3][mmHg]/mole\right)}$$

Where:
FR = Air flow rate.

(I) The following equation shall be used to calculate the VOC emissions per batch from 24–T–230 listed at paragraph (x)(9)(i)(A)(*38*) of this section:

$$ER(lb/batch) = \frac{(V_H - V_A) \times M_V \times PP_{135°F} \times 0.5}{constant_3}$$

Where:
V_H = Head space volume at heated temperature 135 °F;
V_A = Head space volume at ambient temperature 68 °F;
PP_{135} °F = Partial pressure of volatile component at 135 °F.
$Constant_3$ = (434 ft^3/mole)(7.45 gal/ft^3) × (760 mmHg)

(J) The following equations shall be used to calculate the VOC emissions per batch from the process sources listed in paragraph (x)(9)(i) (*39*) through (*47*) of this section:

$$ER_A(1b/yr) = \frac{V_R(gal) \times M_V(lb/mole) \times P(mmHg) \times org}{t(yr) \times constant_1\ ([gal]\ [mmHg]/mole)}$$

$$ER_B(lb/yr) = C_B \times V_T(gal) \times d_B(lb/gal) \times (charges/yr) \times org$$

$$ER_C(lb/yr) = C_C \times Evap(gal/min) \times d_C(lb/gal) \times (min/yr) \times org$$

Where:
V_R = Refill volume;
t = Time between refills;
org = Fraction of organic component in product;
C_B = Concentration of chemical B fed 3 times/week;
v_T = Tower volume;
d_B = Density of chemical B;
C_C = Concentration of chemical C fed continuously;
Evap = Evaporation rate; and
d_c = Density of chemical C.

(K) The number of batches for each process source shall be calculated as follows:

(*1*) Compute the monthly number of batches for each process source by the 15th day of the following month.

(*2*) By the 15th day of each month, add the monthly number of batches for each process source for the 12 previous months to obtain the total number of batches per year.

(ii) *Recordingkeeping*. (A) On and after October 1, 1992, the owner and operator

of the Nalco Chemical Company facility in Bedford Park, Illinois, shall keep the following records for all process sources listed in paragraphs (x)(9)(i)(A) (*1*) through (*53*) of this section. These records shall be maintained for the units specified in paragraphs (x)(9)(i)(A) through (K) of this section, be compiled on a monthly basis, be retained at the facility for a period of 3 years, and be made available to the Administrator upon request.

(B) [Reserved]

(*1*) Calculations of the pounds per batch or pounds per hour (as appropriate) for each batch for each process source. This includes the information necessary for each calculation.

(*2*) The monthly number of batches for each process source.

(*3*) The total number of batches per year for the 12 previous months for each process source.

(10) The control requirements in this paragraph apply to the storage tanks listed in paragraph (x)(10)(i)(A) of this section at the Nalco Chemical Company facility in Bedford Park, Illinois, instead of the control requirements in paragraph (x)(3) of this section.

(i) *Production and Operation Restrictions*. (A) On and after October 1, 1992, the product of the molecular weight of vapor in each storage tank (M_v), the true vapor pressure at bulk liquid conditions for each tank (P), and the paint factor (F_p); the storage tank maximum yearly throughput for each tank; and the maximum monthly throughput for each tank shall not exceed the following limits:

Tank No.	$M_V \times P \times F_p$, (lb) (mmhg)/lb-mole	Yearly throughput, gal/yr	Monthly throughput, gal/month
(*1*) 24–T–147	45.4	56,250	4,688
(*2*) 24–T–150	227	266,450	22,204
(*3*) 24–T–151	227	266,450	22,204
(*4*) 24–T–158N	18.9	173,830	14,486
(*5*) 24–T–158C	18.0	110,190	9,183
(*6*) 24–T–158S	1.17	52,010	4,334
(*7*) 24–T–160	226.8	266,450	22,204
(*8*) 24–T–161	227	182,450	15,204
(*9*) 24–T–162	473	93,900	7,825
(*10*) 20–T–101	3.72	90,290	7,525
(*11*) 20–T–102	1.80	122,900	10,242
(*12*) 20–T–103	420	23,960	1,997
(*13*) 20–T–104	180	475,900	39,659
(*14*) 20–T–105	370	52,360	4,363
(*15*) 20–T–106	1,210	623,100	51,926
(*16*) 20–T–107	294	90,040	7,503
(*17*) 20–T–108	1,360	81,470	6,789
(*18*) 20–T–109	1,390	167,060	13,922
(*19*) 20–T–153	180	35,000	2,917
(*20*) 20–T–131 [a].			
(*21*) 20–T–132 [a].			
(*22*) 20–T–133 [a].			
(*23*) 20–T–134 [a].			
(*24*) 20–T–135 [a].			
(*25*) 20–T–136	29.5	307,710	26,580
(*26*) 20–T–137 [a].			
(*27*) 20–T–138	29.5	307,710	26,580
(*28*) 32–T–305	288	785,550	65,462
(*29*) 32–T–306	66.5	165,350	13,779
(*30*) 32–T–307	66.5	294,750	24,563
(*31*) 32–T–308	66.5	128,470	10,706
(*32*) 32–T–310	66.5	77,290	6,441
(*33*) 32–T–311	66.5	182,130	15,177
(*34*) 32–T–319	50.0	688,950	57,413
(*35*) 32–T–320	50.0	688,950	57,413
(*36*) 32–T–326	70.0	248,440	20,703
(*37*) 32–T–331	70.0	489,540	40,795
(*38*) 32–T–332	70.0	70,380	5,865
(*39*) 32–T–333	70.0	270,850	22,571
(*40*) 32–T–334	70.0	210,610	18,267
(*41*) 32–T–335	70.0	418,200	34,850
(*42*) 32–T–336	70.0	632,460	52,706
(*43*) 32–T–337	798	53,850	4,488
(*44*) 17–T–206	27,000	300,760	25,063
(*45*) 17–T–208	27,000	300,760	25,063

Tank No.	$M_V \times P \times F_p$, (lb) (mmhg)/lb-mole	Yearly throughput, gal/yr	Monthly throughput, gal/month
(*46*) 17–T–207	2.48	180,180	15,016
(*47*) 17–T–209	2.48	180,180	15,016
(*48*) 24–T–515	331	216,860	18,072
(*49*) 25–T–282	1.42	1,920,410	160,034
(*50*) 25–T–283	1.42	1,920,410	160,034
(*51*) 24–T–442	18.0	90,990	7,583
(*52*) 17–T–210	47.9	582,990	48,583
(*53*) 17–T–211	47.9	582,990	48,583
(*54*) 17–T–212	508	728,420	60,702
(*55*) 17–T–213	508	728,420	60,702
(*56*) 17–T–401	50.0	131,970	10,998
(*57*) 17–T–402	15.0	120,160	10,014
(*58*) 17–T–403	6.20	127,770	10,648
(*59*) 17–T–404	26.5	1,601,510	133,460
(*60*) 17–T–405	50.0	113,830	9,486
(*61*) 17–T–406	40.0	231,030	19,253
(*62*) 17–T–407	206	135,180	11,265
(*63*) 17–T–409	395	327,410	27,285
(*64*) 17–T–410	395	129,290	10,774
(*65*) 17–T–411	50.0	213,870	17,843
(*66*) 17–T–412	50.0	277,840	23,153
(*67*) 17–T–414	50.0	72,920	6,077
(*68*) 17–T–415	50.0	56,140	4,678
(*69*) 17–T–416	395	393,550	32,796
(*70*) 17–T–417	23.4	233,780	19,482
(*71*) 17–T–418	115	873,270	72,773
(*72*) 17–T–419	119	278,460	23,205
(*73*) 17–T–420	112	730,780	60,898
(*74*) 17–T–421	25.2	300,010	25,001
(*75*) 17–T–422	115	873,270	72,773
(*76*) 17–T–423	23.4	215,060	17,922
(*77*) 17–T–424	23.4	209,610	17,468
(*78*) 26–T–218	50.0	64,890	5,408
(*79*) 26–T–219	1.50	197,900	16,492
(*80*) 26–T–220	2,460	160,020	13,336
(*81*) 26–T–221	50.0	74,820	6,235
(*82*) 26–T–222	80.0	66,590	5,550
(*83*) 26–T–224	4.80	225,290	18,774
(*84*) 26–T–225	50.0	36,610	3,051
(*85*) 26–T–226	294	47,390	3,949
(*86*) 26–T–227	50.0	63,040	5,253
(*87*) 26–T–228	500	136,150	11,346
(*88*) 26–T–229	50.0	112,970	9,414
(*89*) 26–T–231	23.4	319,610	26,634
(*90*) 26–T–232	117	564,280	47,024
(*91*) 26–T–233	23.4	539,700	44,975
(*92*) 27–T–245	21.6	361,970	30,165
(*93*) 27–T–246	348	141,820	11,818
(*94*) 27–T–247	23.4	71,670	5,972
(*95*) 27–T–248	198	96,010	8,001
(*96*) 27–T–249	927	51,240	4,270
(*97*) 27–T–250	110	433,030	36,086
(*98*) 27–T–251	396	45,440	3,787
(*99*) 27–T–252	21.6	171,370	14,281
(*100*) 27–T–253	348	237,900	19,825
(*101*) 26–T–192	10.0	117,950	9,829
(*102*) 27–T–278	0.62	74,910	6,243
(*103*) 27–T–279	0.18	583,760	48,647
(*104*) 27–T–285	21.6	459,530	38,294
(*105*) 27–T–286	21.6	459,530	38,294
(*106*) 25–T–201	19.8	143,550	11,963
(*107*) 32–T–388	0.07	499,340	41,612
(*108*) 32–T–389	0.07	499,340	41,612
(*109*) 32–T–390	288	808,310	583,340
(*110*) 32–T–391	1.42	800,00	583,340

[a] Tank not in use.

(B) The throughput shall be calculated as follows:

(*1*) Compute the monthly throughput for each tank by the 15th day of the following month.

(*2*) By the 15th day of each month, add the monthly throughputs for the 12 previous months to obtain the yearly throughput.

(ii) *Recordkeeping*. (A) On and after October 1, 1992, the owner and operator of the Nalco Chemical Company facility in Bedford Park, Illinois, shall keep the following records for all storage tanks. These records shall be compiled on a monthly basis, be retained at the facility for a period of 3 years, and be made available to the Administrator upon request.

(*1*) The molecular weight of vapor in each storage tank (M_v), the true vapor pressure at bulk liquid conditions for each tank (P), the paint factor (F_p), and their product. F_p shall be determined from Table 4.3–1 of ''Compilation of Air Pollutant Emission Factors, Volume I: Stationary Point and Area Sources,'' AP–42, September 1985.

(*2*) The monthly throughput.

(*3*) The total throughput per year for the 12 previous months.

(B) [Reserved]

(iii) *Test Methods*. (A) The true vapor pressure at bulk liquid temperature shall be determined by using the procedures specified in paragraph (a)(8) of this section.

(B) The molecular weight of vapor in the storage tank shall be determined by using Table 4.3–2 ''Compilation of Air Pollutant Emission Factors, Volume I: Stationary Point and Area Sources,'' AP–42, September 1985, or by analysis of vapor samples. Where mixtures of organic liquids are stored in a tank, M_v shall be estimated from the liquid composition using the following equation:

$$M_v = M_a \frac{P_a X_a}{P_t} + M_b \frac{P_b X_b}{P_t}$$

Where:

M_a = Molecular weight of pure component a;
P_a = Vapor pressure of pure component a;
X_a = Mole fraction of pure component a in the liquid;
M_b = Molecular weight of pure component b;
P_b = Vapor pressure of pure component b;
X_b = Mole fraction of pure component b in the liquid; and
$P_t = P_a X_{2=} P_b X_b$.

(11) The control requirements in this paragraph apply to the fugitive emission sources listed in paragraph (x)(11)(i)(A) of this section at the Nalco Chemical Company facility in Bedfore Park, Illinois, instead of the control requirements in paragraph (x)(3) of this section.

(i) *Production and Operation Restrictions*.

(A) On and after October 1, 1992, all components (e.g., pumps, valves, flanges, pressure relief valves (PRV's), and open end lines) at the specified locations (e.g., Building 32—Tube Reactor System, etc.), and in the specified type of service (e.g., heavy liquid stratified, light liquid stratified, etc.) shall be limited by the maximum monthly hours in the following table:

(ii) *Recordkeeping*.

(A) On and after October 1, 1992, the owner and operator of the Nalco Chemical Company facility in Bedford Park, Illinois, shall keep the following records for all fugitive emission sources. These records shall be compiled on a monthly basis, be retained at the facility for a period of 3 years, and be made available to the Administrator upon request.

(*1*) The total number of hours of organic service for each component at each location specified in paragraphs (x)(11)(i)(A) (*1*) through (*10*) of this section.

(*2*) The vapor pressure of each organic compound in each component at each location specified in paragraphs (x)(11)(i)(A) (*1*) through (*10*) of this section.

(B) [Reserved]

(12) The control and recordkeeping and reporting requirements, as well as the test methods in this paragraph, apply to the gravure and screen press operations at the Meyercord Corporation (Meyercord) in Carol Stream, Illinois, instead of the requirements in paragraphs (x)(1) through (x)(5) of this section.

(i) After July 1, 1991, no materials which contain volatile organic material (VOM), including coatings, inks, and cleaning material, may be used at any gravure or screen press unless the

total VOM emissions remain below 100 tons of VOM for every consecutive 365-day period, or fraction thereof, starting on July 1, 1991. A new 365-day period starts on each day. The VOM emissions, which are to be calculated on a daily basis, are to be added to the VOM emissions for the prior 364 days (but not including any day prior to July 1, 1991). VOM emissions are based upon the VOM content of the material and the volume of material used. The effect of add-on control equipment is not considered in calculating VOM emissions; that is, the VOM emissions are to be determined as if the press(es) do(es) not have add-on control equipment. The applicable test methods and procedures specified in paragraph (a)(4) of this section are to be used in determining daily VOM emissions.

(ii) The VOM content of each coating, ink, and cleaning solution shall be determined by the applicable test methods and procedures specified in paragraph (a)(4) of this section to establish the records required under paragraph (x)(12)(ii) of this section. Beginning on July 1, 1991, the owner or operator of the subject presses shall collect and record all of the following information each day and maintain the information at the facility for 3 years:

(A) The name and identification number of each coating, ink, and cleaning solution as applied on any press.

(B) The pounds (lbs) of VOM per gallon of each coating, ink, and cleaning solution (minus water and any compounds which are specifically exempted from the definition of VOM) as applied on any press.

(C) The total gallons of each coating, ink, and cleaning solution (minus water and any compounds which are specifically exempted from the definition of VOM) used per day.

(D) The total lbs of VOM contained in the volume of each coating, ink, and cleaning solution used per day on any press. The lbs of VOM per day is to be calculated by multiplying the lbs of VOM per gallon (minus water and any compounds which are specifically exempted from the definition of VOM) times the gallons (minus water and any compounds which are specifically exempted from the definition of VOM) used per day.

(E) The total lbs of VOM per day from all coatings, inks, and cleaning solutions used on all presses. The total lbs of VOM per day is to be obtained by adding the lbs of VOM per day contained in all coatings, inks, and cleaning solutions.

(F) Within 7 days after each 365-day period, the VOM emissions (as calculated in paragraph (x)(12)(ii)(E)) of this section before add-on control, from the 365-day period, are to be determined.

Starting on July 7, 1992, VOM emissions are to be determined for the 365 days ending 7 days earlier. Each day concludes a new 365-day period. However, no VOM emissions are to be included for any days prior to July 1, 1991. For example, on July 17, 1991, the emissions from July 1, through July 10, 1991, are to be included, whereas on January 7, 1994, the emissions from January 1, 1993, through December 31, 1993, are to be included.

(13) The control and recordkeeping and reporting requirements, as well as the test methods in this paragraph, apply to the sheet fed cold set presses and web heatset presses at the Wallace Computer Services, Inc. (Wallace) printing and binding plant in Hillside, Illinois, instead of the requirements in 40 CFR 52.741(h) and 40 CFR 52.741(x)(1) through 40 CFR 52.741(x)(5).

(i) After July 1, 1991, no inks shall at any time be applied, at the presses indicated below, which exceed the pounds (lbs) volatile organic material (VOM) per gallon of ink (minus water and any compounds which are specifically exempted from the definition of VOM) limit established for each press. After July 1, 1991, the yearly volume of ink used at each press, in gallons of ink (minus water and any compounds which are specifically exempted from the definition of VOM) per year, shall not exceed the gallons per year limit established below for each press. The yearly volume of ink used per press is to be calculated according to the procedure in paragraph (x)(13)(iii) of this section.

Press	Lbs VOM/ gallon ink	Gallons/ year ink
14	1.68	276

Press	Lbs VOM/ gallon ink	Gallons/ year ink
16	1.68	1896
22	3.01	2712
23	3.01	13140
25	3.01	12720
26	3.01	4764

(ii) After July 1, 1991, no materials (other than those inks subject to the limits in paragraph (x)(13)(i)) of this section, shall at any time be applied or used, at the presses indicated below, which exceed the lbs VOM per gallon of material (minus water and any compounds which are specifically exempted from the definition of VOM) limit established for each press. After July 1, 1991, the yearly volume of material (excluding ink and water) used at each press, in gallons of material (minus water and any compounds which are specifically exempted from the definition of VOM) per year, shall not exceed the gallons per year limit established for each press. The yearly volume of material (excluding ink and water) used per press is to be calculated according to the procedure in paragraph (x)(13)(iii) of this section.

Press	Lbs VOM/ gallon material	Gallons/ year material
14	6.9	612
16	6.9	8,340
22	7.1	360
23	7.1	480
25	7.1	516
26	7.1	1,848

(iii) The yearly volume of ink/material used is to be calculated as follows:

(A) Compute the volume of ink/material used each month per press by the 15th of the following month.

(B) By the 15th of each month, add the monthly ink/material usage per press for the 12 previous months (to obtain the yearly volume of ink used).

(iv) Beginning on July 1, 1991, the owner and operator of Wallace's plant in Hillside, Illinois, shall keep the following records for each press for each month. All records shall be retained by Wallace for 3 years and shall be made available to the Administrator on request:

(A) The name and identification number of each ink, fountain solution, fountain solution additive, cleaning solvent, and other VOM containing material as applied or used.

(B) The weight of VOM per volume of each ink, fountain solution, fountain solution additive, cleaning solvent, and each other VOM containing material (minus water and any compounds which are specifically exempted from the definition of VOM) as applied or used each month.

(C) The volume of ink (minus water and any compounds which are specifically exempted from the definition of VOM) as applied each month.

(D) The total volume of miscellaneous VOM containing materials (minus water and any compounds which are specifically exempted from the definition of VOM), other than inks, that are used each month.

(v) Any record showing a violation of paragraph (x)(13)(i) or (x)(13)(ii) of this section shall be reported by sending a copy of such record to the Administrator within 30 days of the violation.

(vi) To determine compliance with paragraphs (x)(13)(i) and (x)(13)(ii) of this section and to establish the records required under paragraph (x)(13)(iv) of this section the VOM content of each ink and miscellaneous VOM containing material shall be determined by the applicable test methods and procedures specified in paragraph (a)(4) of this section.

(14) The control and recordkeeping and reporting requirements, as well as the test methods in this paragraph, apply to the power-operated silk screen presses, the hand screen presses, the screen adhesive printing lines, the Andreotti rotogravure press, the Halley Rotogravure press, and the Viking press at the American Decal and Manufacturing Company's plant in Chicago, Illinois, instead of the requirements in paragraphs (h) and (x)(1) through (x)(5) of this section. The emissions from the sources listed above (in paragraph (x)(14) of this section) are to be included in the calculation of ''maximum theoretical emissions'' for determining applicability for any other sources (for which applicability is based on the quantity of maximum theoretical emissions) at American Decal and

Manufacturing Company's Chicago plant not included in paragraph (x)(14) of this section.

(i) After July 24, 1992, no inks, coatings, thinner, clean-up material or other VOC-containing material shall at any time be applied, at the presses/printing lines listed above (in paragraph (x)(14) of this section), which exceed the VOC content (in percent by weight VOC) limit established below. After July 24, 1992, the yearly usage (in weight of material applied) of ink, coating, thinner, clean-up material, and other VOC-containing material, shall not exceed the applicable pounds per year limit established below. The yearly weight of ink, coating, thinner, clean-up material, and other VOC-containing material is to be calculated according to the procedure in paragraph (x)(14)(ii) of this section.

Material	Usage (lbs/yr)	Weight Percent VOC
#6 ink	9,076	56.8
#7 ink	1,278	54.2
#2 ink	2,911	72.7
Blue N.C. lacq.	394	64.3
Black M lacq.	753	61.6
4B9L Clear	2,451	77.1
4B9L H Clear	3,360	75.0
Flow-Out Agent	1,795	97.1
D.S. Stamp lacq.	1,047	62.0
Dull write-on	86	71.6
AH–16	621	84.5
Thinner (#7,6)	2,350	100.0
Exon 470	1,668	65.4
9L Clear	2,451	77.1
White M lacq	3,467	47.0
Tedlar Gr. Vehicle	1,050	66.7
TH–98	22,047	73.2
TH–57	59	69.5
TH–14M	16,520	0.7
PS 160	10,644	3.0
#1 tint	4,872	69.3
#2 tint	4,256	83.7
Roto Color	13,884	62.0
1st SS White	25,740	51.5
2nd SS White	25,740	51.5
Clean Up	108,742	100.0
Other Materials	400	100.0

(ii) The yearly weight of material used is to be calculated as follows:

(A) Compute the weight of each ink, coating, thinner, clean-up material, and other VOC-containing material used each month by the 15th of the following month.

(B) By the 15th of each month, add the monthly usage (in pounds) for each ink, coating, thinner, clean-up material, and other VOC-containing material for the twelve previous months (to obtain the yearly weight of each ink, coating, thinner, clean-up material used). A comparison of these yearly usage levels (in pounds) with purchase records must be made to ensure the accuracy of the monthly usage levels (in pounds) obtained to satisfy paragraph (x)(14)(ii)(A) of this section.

(iii) Beginning on August 1, 1992, the owner and operator of the American Decal and Manufacturing Company plant in Chicago, Illinois, shall keep the following records for each ink, coating, thinner, clean-up material, and other VOC-containing material for each month. All records shall be kept by the American Decal and Manufacturing Company for 3 years and shall be made available to the Administrator on request:

(A) The name and identification number of each ink, coating, thinner, clean-up material, and other VOC-containing material as applied or used.

(B) The weight percent VOC of each ink, coating, thinner, clean-up material, and each other VOC-containing material as applied or used each month.

(C) The as applied weight of each ink, coating, thinner, clean-up material, and other VOC-containing material used each month.

(iv) Any record showing a violation of paragraph (x)(14)(i) of this section after October 20, 1995 shall be reported by sending a copy of such record to the Administrator within 30 days of the violation.

(v) To determine compliance with paragraph (x)(14)(i) of this section and to establish the records required under paragraph (x)(14)(iii) of this section, the weight percent VOC of each ink, coating, thinner, clean-up material, and other VOC-containing material shall be determined by the applicable test methods and procedures specified in paragraph (a)(4) of this section. Any material reported to be 100 percent VOC does not have to be tested for weight percent VOC.

(y) *Recordkeeping and reporting for non-CTG sources*—(1) *Exempt emission sources.* Upon request by the Administrator, the owner or operator of an emission source which is exempt from the requirements of paragraphs (u), (v), (w), (x), or (e)(3)(ii) of this section shall

submit records to the Administrator within 30 calendar days from the date of the request that document that the emission source is exempt from those requirements.

(2) *Subject emission sources.* (i) Any owner or operator of a VOM emission source which is subject to the requirements of paragraph (u), (v), (w) or (x) of this section and complying by the use of emission capture and control equipment shall comply with the following:

(A) By July 1, 1991, or upon initial start-up of a new emission source, the owner or operator of the subject VOM emission source shall perform all tests and submit to the Administrator the results of all tests and calculations necessary to demonstrate that the subject emission source will be in compliance on and after July 1, 1991, or on and after the initial start-up date.

(B) On and after July 1, 1991, or on and after the initial start-up date, the owner or operator of a subject VOM emission source shall collect and record all of the following information each day and maintain the information at the facility for a period of three years:

(*1*) Control device monitoring data.

(*2*) A log of operating time for the capture system, control device, monitoring equipment and the associated emission source.

(*3*) A maintenance log for the capture system, control device and monitoring equipment detailing all routine and non-routine maintenance performed including dates and duration of any outages.

(C) On and after July 1, 1991, the owner or operator of a subject VOM emission source shall notify the Administrator in the following instances:

(*1*) Any record showing a violation of the requirements of paragraphs (u), (v), (w), or (x) of this section shall be reported by sending a copy of such record to the Administrator within 30 days following the occurrence of the violation.

(*2*) At least 30 calendar days before changing the method of compliance with paragraphs (u) or (x) of this section from the use of capture systems and control devices to the use of complying coatings, the owner or operator shall comply with all requirements of paragraph (y)(2)(ii)(A) of this section. Upon changing the method of compliance with paragraphs (u) or (x) of this section from the use of capture systems and control devices to the use of complying coatings, the owner or operator shall comply with all requirements of paragraph (y)(2)(ii) of this section.

(ii) Any owner or operator of a coating line which is subject to the requirements of paragraphs (u) or (x) of this section and complying by means of the daily-weighted average VOM content limitation shall comply with the following:

(A) By July 1, 1991, or upon initial start-up of a coating line subject to paragraph (u) or (x) of this section; the owner or operator of the subject coating line shall certify to the Administrator that the coating line will be in compliance on and after July 1, 1991, or on and after the initial start-up date. Such certification shall include:

(*1*) The name and identification number of each coating line which will comply by means of the daily-weighted average VOM content limitation.

(*2*) The name and identification number of each coating as applied on each coating line.

(*3*) The weight of VOM per volume and the volume of each coating (minus water and any compounds which are specifically exempted from the definition of VOM) as applied each day on each coating line.

(*4*) The instrument or method by which the owner or operator will accurately measure or calculate the volume of each coating as applied each day on each coating line.

(*5*) The method by which the owner or operator will create and maintain records each day as required in paragraph (y)(2)(ii)(B) of this section.

(*6*) An example of the format in which the records required in paragraph (y)(2)(ii)(B) of this section will be kept.

(B) On and after July 1, 1991, or on and after the initial start-up date, the owner or operator of a subject coating line shall collect and record all of the following information each day for each coating line and maintain the information at the facility for a period of three years:

(*1*) The name and identification number of each coating as applied on each coating line.

(*2*) The weight of VOM per volume and the volume of each coating (minus water and any compounds which are specifically exempted from the definition of VOM) as applied each day on each coating line.

(*3*) The daily-weighted average VOM content of all coatings as applied on each coating line as defined in paragraph (a)(3) of this section.

(C) On and after July 1, 1991, the owner or operator of a subject coating line shall notify the Administrator in the following instances:

(*1*) Any record showing violation of the requirements of paragraph (u) or (x) of this section shall be reported by sending a copy of such record to the Administrator within 30 days following the occurrence of the violation.

(*2*) At least 30 calendar days before changing the method of compliance with paragraph (u) or (x) of this section from the use of complying coatings to the use capture systems and control devices, the owner or operator shall comply with all requirements of paragraph (y)(2)(i)(A) of this section. Upon changing the method of compliance with paragraphs (u) or (x) of this section from the use of complying coatings to the use capture systems and control devices, the owner or operator shall comply with all requirements of paragraph (y)(2)(i) of this section.

(iii) Any owner or operator of a VOM emission source which is subject to the requirements of paragraphs (u), (v), (w) or (x) of this section and complying by means of an alternative control plan which has been approved by the Administrator as a SIP or FIP revision shall comply with the recordkeeping and reporting requirements specified in the altenative control plan.

(z) *Rules stayed*. Not withstanding any other provision of this subpart, the effectiveness of the following rules is stayed as indicated below.

(1) [Reserved]

(2) Compliance with all of 40 CFR 52.741 is stayed for 60 days (July 1, 1991, until August 30, 1991) as it pertains to the following parties: The Illinois Environmental Regulatory Group including its approximately 40 member firms; Allsteel, Incorporated; Riverside Laboratories, Incorporated; the Printing Industry of Illinois/Indiana Association including its member firms, and R.R. Donnelley & Sons Company; the rules applicable to General Motors Corporation; Reynolds Metals Company; Stepan Company; and Duo-Fast Corporation. Final compliance for these parties is extended 60 days from July 1, 1991 until August 30, 1991.

(3) The following rules are stayed from July 23, 1991, until USEPA completes its reconsideration as indicated:

(i) 40 CFR 52.741(e) only as it applies to Duo-Fast Corporation's Franklin Park, Illinois ''power-driven metal fastener'' manufacturing facility, and

(ii) 40 CFR 52.741 (w) and (y) only as it applies to Stepan Company's miscellaneous organic chemical manufacturing processes at its manufacturing facility located near Millsdale, Illinois.

When USEPA concludes its reconsideration, it will publish its decision and any actions required to effectuate that decision in the FEDERAL REGISTER.

(4)–(5) [Reserved]

APPENDIX A TO § 52.741—LIST OF CHEMICALS DEFINING SYNTHETIC ORGANIC CHEMICAL AND POLYMER MANUFACTURING

OCPDB No.[1]	Chemical
20	Acetal.
30	Acetaldehyde.
40	Acetaldol.
50	Acetamide.
65	Acetanilide.
70	Acetic acid.
80	Acetic anhydride.
90	Acetone.
100	Acetone cyanohydrin.
110	Acetonitrile.
120	Acetophenone.
125	Acetyl chloride.
130	Acetylene.
140	Acrolein.
150	Acrylamide.
160	Acrylic acid & esters.
170	Acrylonitrile.
180	Adipic acid.
185	Adiponitrile.
190	Alkyl naphthalenes.
200	Allyl alcohol.
210	Allyl chloride.
220	Aminobenzoic acid.
230	Aminoethylethanolamine.
235	p-aminophenol.
240	Amyl acetates.
250	Amyl alcohols.
260	Amyl amine.
270	Amyl chloride.
280	Amyl mercaptans.
290	Amyl phenol.
300	Aniline.

OCPDB No.[1]	Chemical
310	Aniline hydrochloride.
320	Anisidine.
330	Anisole.
340	Anthranilic acid.
350	Anthraquinone.
360	Benzaldehyde.
370	Benzamide.
380	Benzene.
390	Benzenedisulfonic acid.
400	Benzene-sulfonic acid.
410	Benzil.
420	Benzilic acid.
430	Benzoic acid.
440	Benzoin.
450	Bennzonitrile.
460	Benzophenone.
480	Benzotrichloride.
490	Benzoyl chloride.
500	Benzyl chalcohol.
510	Benzyl amine.
520	Benzyl benzoate.
530	Benzyl chloride.
540	Benzyl dichloride.
550	Biphenyl.
560	Bisphenol A.
570	Bromobenzene.
580	Bromonaphthalene.
590	Butadiene.
592	1-butene.
600	n-butyl acetate.
630	n-butyl acrylate.
640	n-butyl alcohol.
650	s-butyl alcohol.
660	t-butyl alcohol.
670	n-butylamine.
680	s-butylamine.
690	t-butylamine.
700	p-pert-butyl benzoic acid.
750	n-butyraldehyde.
760	Butyric acid.
770	Butyric anhydride.
780	Butyronitrile.
785	Caprolactam.
790	Carbon disulfide.
800	Carbon tetrabromide.
810	Carbon tetrachloride.
820	Cellulose acetate.
840	Chloroacetic acid.
850	m-chloroaniline.
860	o-chloroaniline.
870	p-chloroaniline.
880	Chlorobenzaldehyde.
890	Chlorobenzene.
900	Chlorobenzoic acid.
905	Chlorobenzotrichloride.
910	Chlorobenzoyl chloride.
920	Chlorodifluoroethane.
921	Chlorodifluoromethane.
930	Chloroform
940	Chloronaphthalene.
950	o-chloronitrobenzene.
951	p-chloronitrobenzene.
960	Chlorophenols.
964	Chloroprene.
965	Chlorosulfonic acid.
970	m-chlorotoluene.
980	o-chlorotoluene.
990	p-chlorotoluene.
992	Chlorotrifluoromethane.
1000	m-cresol.
1010	o-cresol.
1020	p-cresol.
1021	Mixed cresols.

OCPDB No.[1]	Chemical
1030	Cresylic acid.
1040	Crontonaldehyde.
1050	Crontonic acid.
1060	Cumene.
1070	Cumene hydroperoxide.
1080	Cyanoacetic acid.
1090	Cyanogen chloride.
1100	Cyanuric acid.
1110	Cyanuric chloride.
1120	Cychohexane.
1130	Cyclohexanol.
1140	Cyclohexanone.
1150	Cyclohexene.
1160	Cyclohexylamine.
1170	Cyclooctadiene.
1180	Decanol.
1190	Diacetone alcohol.
1200	Diaminobenzoic acid.
1210	Dichloroaniline.
1215	m-dichlorobenzene.
1216	o-dichlorobenzene.
1220	p-dichlorobenzene.
1221	Dichlorodifluoromethane.
1240	Dichloroethyl ether 1,2-dichloroethane.
1250	Dichlorohydrin
1270	Dichloropropene.
1280	Dicyclohexylamine.
1290	Diethylamine.
1300	Diethylene glycol.
1304	Diethylene glycol diethyl ether.
1305	Diethylene glycol dimethyl ether.
1310	Diethylene glycolmonobutyl ether.
1320	Diethylene glycolmonobutyl ether acetate.
1330	Diethylene glycolmonoethyl ether.
1340	Diethylene glycolmonoethyl ether acetate.
1360	Diethylene glycolmonomethyl ether.
1420	Diethyl sulfate.
1430	Difluoroethane.
1440	Diisobutylene.
1442	Diisodecyl phthalate.
1444	Diisooctyl phthalate.
1450	Diketene.
1460	Dimethylamine.
1470	N,N-dimethylaniline.
1480	N,N-dimethylether.
1490	N,N-dimethylformamide.
1495	Dimethylhydrazine.
1500	Dimethyl sulfate.
1510	Dimethyl sulfide.
1520	Dimethylsulfoxide.
1530	Dimethylterephthalate.
1540	3,5-dinitrobenzoic acid.
1545	Dinitrophenol.
1560	Dioxane.
1570	Dioxolane.
1580	Diphenylamine.
1590	Diphenyl oxide.
1600	Diphenyl thiourea.
1610	Dipropylene glycol.
1620	Dodecene.
1630	Dodecylaniline.
1640	Dodecylphenol.
1650	Epichlorohydrin.
1660	Ethanol.
1661	Ethanolamines.
1670	Ethyl acetate.
1680	Ethyl acetoacetate.
1690	Ethyl acrylate.
1700	Ethylamine.
1710	Ethylbenzene.
1720	Ethyl bromide.
1730	Ethylcellulose.
1740	Ethyl chloride.

OCPDB No.[1]	Chemical
1750	Ethyl chloroacetate.
1760	Ethylcyanoacetate.
1770	Ethylene.
1780	Ethylene carbonate.
1790	Ethylene chlorodhydrin.
1800	Ethylenediamine.
1810	Ethylene dibromide.
1830	Ethylene glycol.
1840	Ethylene glycol diacetate.
1870	Ethylene glycol dimethyl ether.
1890	Ethylene glycol monobutyl ether.
1900	Ethylene glycol monobutyl ether acetate.
1910	Ethylene glycol monoethyl ether.
1920	Ethylene glycol monoethyl ether acetate.
1930	Ethylene glycol monoethyl ether.
1940	Ethylene glycol monomethyl ether acetate.
1960	Ethylene glycol monophenyl ether.
1970	Ethylene glycol monopropyl ether.
1980	Ethylene oxide.
1990	Ethyl ether.
2000	2-ethylhexanol.
2010	Ethyl orthoformate.
2020	Ethyl oxalate.
2030	Ethyl sodium oxalacetate.
2040	Formaldehyde.
2050	Formamide.
2060	Formic acid.
2070	Fumaric acid.
2073	Furfural.
2090	Glycerol (Synthetic).
2091	Glycerol dichlorohydrin.
2100	Glycerol triether.
2110	Glycine.
2120	Glyoxal.
2145	Hexachlorobenzene.
2150	Hexachloroethane.
2160	Hexadecyl alcohol.
2165	Hexamethylenediamine.
2170	Hexamethylene glycol.
2180	Hexamethylentetramine.
2190	Hydrogen cyanide.
2200	Hydroquinone.
2210	p-hydroxy-benzoic acid.
2240	Isoamylene.
2250	Isobutanol.
2260	Isobutyl acetate.
2261	Isobutylene.
2270	Isobutyraldehyde.
2280	Isobutyric acid.
2300	Isodecanol.
2320	Isooctyl alcohol.
2321	Isopentane.
2330	Isophorone.
2340	Isophthalic acid.
2350	Isoprene.
2360	Isopropanol.
2370	Isopropyl acetate.
2380	Isopropylamine.
2390	Isopropyl chloride.
2400	Isopropylphenol.
2410	Ketene.
2414	Linear alkylsulfonate.
2417	Linear alkylbenzene.
2420	Maleic acid.
2430	Maleic anhydride.
2440	Malic acid.
2450	Mesityl oxide.
2455	Metanilic acid.
2460	Methacrylic acid.
2490	Methallyl chloride.
2500	Methanol.
2510	Methyl acetate.
2520	Methyl acetoacetate.
2530	Methylamine.
2540	n-methylaniline.
2545	Methyl bromide.
2550	Methyl butynol.
2560	Methyl chloride.
2570	Methyl cyclohexane.
2590	Methyl cyclohexanone.
2620	Methylene chloride.
2630	Methylene dianiline.
2635	Methylene diphenyl diisocyanate.
2640	Methyl ethyl ketone.
2644	Methyl formate.
2650	Methyl isobutyl carbinol.
2660	Methyl isobutyl ketone.
2665	Methyl methacrylate.
2670	Methyl pentynol.
2690	a-methyl styrene.
2700	Morpholine.
2710	a-napthalene sulfonic acid.
2720	B-napthalene sulfonic acid.
2730	a-naphthol.
2740	B-naphthol.
2750	Neopentanoic acid.
2756	o-nitroaniline.
2757	p-nitroaniline.
2760	o-nitroanisole.
2762	p-nitroanisole.
2770	Nitrobenzene.
2780	Nitrobenzoic acid (o, m & p).
2790	Nitroethane.
2791	Nitromethane.
2792	Nitrophenol.
2795	Nitropropane.
2800	Nitrotoluene.
2810	Nonene.
2820	Nonyl phenol.
2830	Octyl phenol.
2840	Paraldehyde.
2850	Pentaerythritol.
2851	n-pentane.
2855	l-pentene.
2860	Perchloroethylene.
2882	Perchloromethylmercaptan.
2890	o-phenetidine.
2900	p-phenetidine.
2910	Phenol.
2920	Phenolsulfonic acids.
2930	Phenyl anthranilic acid.
2940	Phenylenediamine.
2960	Phthalic anhydride.
2970	Phthalimide.
2973	b-picoline.
2976	Piperazine.
3000	Polybutenes.
3010	Polyethylene glycol.
3025	Polypropylene glycol.
3063	Propionaldehyde.
3066	Propionic acid.
3070	n-propyl alcohol.
3075	Propylamine.
3080	Propyl chloride.
3090	Propylene.
3100	Propylene chlorohydrin.
3110	Propylene dichloride.
3111	Propylene glycol.
3120	Propylene oxide.
3130	Pyridine.
3140	Quinone.
3150	Resorcinol.
3160	Resorcylic acid.
3170	Salicylic acid.
3180	Sodium acetate.
3181	Sodium benzoate.

OCPDB No.[1]	Chemical
3190	Sodium carboxymethylcellulose.
3191	Sodium chloroacetate.
3200	Sodium formate.
3210	Sodium phenate.
3220	Sorbic acid.
3230	Styrene.
3240	Succinic acid.
3250	Succinitrile.
3251	Sulfanilic acid.
3260	Sulfolane.
3270	Tannic acid.
3280	Terephthalic acid.
3290 & 3291.	Tetrachloroethanes.
3300	Tetrachlorophthalic anhydride.
3310	Tetraethyllead.
3320	Tetrahydronaphthalene.
3330	Tetrahydrophthalic anhydride.
3335	Tetramethyllead.
3340	Tetramethylenediamine.
3341	Tetramethylethylenediamine.
3349	Toluene.
3350	Toluene-2,4-diamine.
3354	Toluene-2,4-diisocyanate.
3355	Toluene diisocyanates (mixture).
3360	Toluene sulfonamide.
3370	Toluene sulfonic acids.
3380	Toluene sulfonylchloride.
3381	Toluidines.
3393	Trichlorobenzenes.
3395	1,1,1-trichloroethane.
3400	1,1,2-trichloroethane.
3410	Trichloroethylene.
3411	Trichlorofluoromethane.
3420	1,2,3-trichloropropane.
3430	1,1,2-trichloro-1,2,2-trifluoroethane.
3450	Triethylamine.
3460	Triethylene glycol.
3470	Triethylene glycoldimethyl ether.
3480	Triisobutylene.
3490	Trimethylamine.
3510	Vinyl acetate.
3520	Vinyl chloride.
3530	Vinylidene chloride.
3540	Vinyl toluene.
3541	Xylene (mixed).
3560	o-xylene.
3570	p-xylene.
3580	Xylenol.
3590	Xylidine, 1,3-butylene glycol, Dinitrotoluene, Methyltertbutyl ether, Phosgene, Polyethylene, Polypropylene, Polystyrene, Urea.

[1] The OCPDB Numbers are reference indices assigned to the various chemicals in the Organic Chemical Producers Data Base developed by the USEPA.

APPENDIX B TO § 52.741—VOM MEASUREMENT TECHNIQUES FOR CAPTURE EFFICIENCY

Procedure G.1—Captured VOC Emissions

1. Introduction

1.1 *Applicability*. This procedure is applicable for determining the volatile organic compounds (VOC) content of captured gas streams. It is intended to be used as a segment in the development of liquid/gas or gas/gas protocols for determining VOC capture efficiency (CE) for surface coating and printing operations. The procedure may not be acceptable in certain site-specific situations, *e.g.*, when: (1) Direct fired heaters or other circumstances affect the quantity of VOC at the control device inlet; and (2) particulate organic aerosols are formed in the process and are present in the captured emissions.

1.2 *Principle*. The amount of VOC captured (G) is calculated as the sum of the products of the VOC content (C_{Gj}), the flow rate (Q_{Gj}), and the sample time (T_C) from each captured emissions point.

1.3 *Estimated measurement uncertainty*. The measurement uncertainties are estimated for each captured or fugitive emissions point as follows: Q_{Gj}=±5.5 percent and C_{Gj}=±5.0 percent. Based on these numbers, the probable uncertainty for G is estimated at about ±7.4 percent.

1.4 *Sampling requirements*. A capture efficiency test shall consist of at least three sampling runs. The sampling time for each run should be at least 8 hours, unless otherwise approved.

1.5 *Notes*. Because this procedure is often applied in highly explosive areas, caution and care should be exercised in choosing appropriate equipment and installing and using the equipment. Mention of trade names or company products does not constitute endorsement. All gas concentrations (percent, ppm) are by volume, unless otherwise noted.

2. APPARATUS AND REAGENTS

2.1 *Gas VOC concentration*. A schematic of the measurement system is shown in Figure 1. The main components are described below:

2.1.1 *Sample probe*. Stainless steel, or equivalent. The probe shall be heated to prevent VOC condensation.

2.1.2 *Calibration valve assembly*. Three-way valve assembly at the outlet of sample probe to direct the zero and calibration gases to the analyzer. Other methods, such as quick-connect lines, to route calibration gases to the outlet of the sample probe are acceptable.

2.1.3 *Sample line*. Stainless steel or Teflon tubing to transport the sample gas to the analyzer. The sample line must be heated to prevent condensation.

2.1.4 *Sample pump*. A lead-free pump, to pull the sample gas through the system at a flow rate sufficient to minimize the response time of the measurement system. The components of the pump that contact the gas stream shall be constructed of stainless steel or Teflon. The sample pump must be heated to prevent condensation.

2.1.5 *Sample flow rate control*. A sample flow rate control valve and rotameter, or equivalent, to maintain a constant sampling rate within 10 percent. The flow rate control valve and rotameter must be heated to prevent condensation. A control valve may also be located on the sample pump bypass loop to assist in controlling the sample pressure and flow rate.

2.1.6 *Sample gas manifold.* Capable of diverting a portion of the sample gas stream to the flame ionization analyzer (FIA), and the remainder to the bypass discharge vent. The manifold components shall be constructed of stainless steel or Teflon. If captured or fugitive emissions are to be measured at multiple locations, the measurement system shall be designed to use separate sampling probes, lines, and pumps for each measurement location and a common sample gas manifold and FIA. The sample gas manifold and connecting lines to the FIA must be heated to prevent condensation.

2.1.7 *Organic concentration analyzer.* An FIA with a span value of 1.5 times the expected concentration as propane; however, other span values may be used if it can be demonstrated that they would provide more accurate measurements.

The system shall be capable of meeting or exceeding the following specifications:

2.1.7.1 *Zero drift.* Less than ±3.0 percent of the span value.

2.1.7.2 *Calibration drift.* Less than ±3.0 percent of the span value.

2.1.7.3 *Calibration error.* Less than ±5.0 percent of the calibration gas value.

2.1.7.4 *Response time.* Less than 30 seconds.

2.1.8 *Integrator/data acquisition system.* An analog or digital device or computerized data acquisition system used to integrate the FIA response or compute the average response and record measurement data. The minimum data sampling frequency for computing average or integrated values is one measurement value every 5 seconds. The device shall be capable of recording average values at least once per minute.

2.1.9 *Calibration and other gases.* Gases used for calibration, fuel, and combustion air (if required) are contained in compressed gas cylinders. All calibration gases shall be traceable to NIST standards and shall be certified by the manufacturer to ±1 percent of the tag value. Additionally, the manufacturer of the cylinder should provide a recommended shelf life for each calibration gas cylinder over which the concentration does not change more than ±2 percent from the certified value. For calibration gas values not generally available, alternative methods for preparing calibration gas mixtures, such as dilution systems, may be used with prior approval.

2.1.9.1 *Fuel.* A 40 percent H_2/60 percent He or 40 percent H_2/60 percent N_2 gas mixture is recommended to avoid an oxygen synergism effect that reportedly occurs when oxygen concentration varies significantly from a mean value.

2.1.9.2 *Carrier gas.* High purity air with less than 1 ppm of organic material (as propane or carbon equivalent) or less than 0.1 percent of the span value, whichever is greater.

2.1.9.3 *FIA Linearity calibration gases.* Low-, mid-, and high-range gas mixture standards with nominal propane concentrations of 20–30, 45–55, and 70–80 percent of the span value in air, respectively. Other calibration values and other span values may be used if it can be shown that more accurate measurements would be achieved.

2.1.10 *Particulate filter.* An in-stack or an out-of-stack glass fiber filter is recommended if exhaust gas particulate loading is significant. An out-of-stack filter must be heated to prevent any condensation unless it can be demonstrated that no condensation occurs.

2.2 *Captured emissions volumetric flow rate.*

2.2.1 *Method 2 or 2A apparatus.* For determining volumetric flow rate.

2.2.2 *Method 3 apparatus and reagents.* For determining molecular weight of the gas stream. An estimate of the molecular weight of the gas stream may be used if it can be justified.

2.2.3 *Method 4 apparatus and reagents.* For determining moisture content, if necessary.

3. Determinations of Volumetric Flow Rate of Captured Emissions

3.1 Locate all points where emissions are captured from the affected facility. Using Method 1, determine the sampling points. Be sure to check each site for cyclonic or swirling flow.

3.2 Measure the velocity at each sampling site at least once every hour during each sampling run using Method 2 or 2A.

4. Determinations of VOC Content of Captured Emissions

4.1 *Analysis duration.* Measure the VOC responses at each captured emissions point during the entire test run or, if applicable, while the process is operating. If there are multiple captured emission locations, design a sampling system to allow a single FIA to be used to determine the VOC responses at all sampling locations.

4.2 *Gas VOC concentration.*

4.2.1 Assemble the sample train as shown in Figure 1. Calibrate the FIA according to the procedure in section 5.1.

4.2.2 Conduct a system check according to the procedure in section 5.3.

4.2.3 Install the sample probe so that the probe is centrally located in the stack, pipe, or duct, and is sealed tightly at the stack port connection.

4.2.4 Inject zero gas at the calibration valve assembly. Allow the measurement system response to reach zero. Measure the system response time as the time required for the system to reach the effluent concentration after the calibration valve has been returned to the effluent sampling position.

4.2.5 Conduct a system check before and a system check after each sampling run according to the procedures in sections 5.2 and 5.3. If the drift check following a run indicates unacceptable performance, the run is not valid. The tester may elect to perform system drift checks during the run not to exceed one drift check per hour.

4.2.6 Verify that the sample lines, filter, and pump temperatures are 120 ±5 °C.

4.2.7 Begin sampling at the start of the test period and continue to sample during the entire run. Record the starting and ending times and any required process information as appropriate. If multiple captured emission locations are sampled using a single FIA, sample at each location for the same amount of time (*e.g.*, 2 minutes) and continue to switch from one location to another for the entire test run. Be sure that total sampling time at each location is the same at the end of the test run. Collect at least 4 separate measurements from each sample point during each hour of testing. Disregard the measurements at each sampling location until two times the response time of the measurement system has elapsed. Continue sampling for at least 1 minute and record the concentration measurements.

4.3 *Background concentration.*

4.3.1 Locate all NDO's of the TTE. A sampling point shall be centrally located outside of the TTE at 4 equivalent diameters from each NDO, if possible. If there are more than 6 NDO's, choose 6 sampling points evenly spaced among the NDO's.

4.3.2 Assemble the sample train as shown in Figure 2. Calibrate the FIA and conduct a system check according to the procedures in sections 5.1 and 5.3.

NOTE: This sample train shall be a separate sampling train from the one to measure the captured emissions.

4.3.3 Position the probe at the sampling location.

4.3.4 Determine the response time, conduct the system check and sample according to the procedures described in sections 4.2.4 to 4.2.7.

4.4 *Alternative procedure.* The direct interface sampling and analysis procedure described in section 7.2 of Method 18 may be used to determine the gas VOC concentration. The system must be designed to collect and analyze at least one sample every 10 minutes.

5. CALIBRATION AND QUALITY ASSURANCE

5.1 *FIA calibration and linearity check.* Make necessary adjustments to the air and fuel supplies for the FIA and ignite the burner. Allow the FIA to warm up for the period recommended by the manufacturer. Inject a calibration gas into the measurement system and adjust the back-pressure regulator to the value required to achieve the flow rates specified by the manufacturer. Inject the zero- and the high-range calibration gases and adjust the analyzer calibration to provide the proper responses. Inject the low- and mid-range gases and record the responses of the measurement system. The calibration and linearity of the system are acceptable if the responses for all four gases are within 5 percent of the respective gas values. If the performance of the system is not acceptable, repair or adjust the system and repeat the linearity check. Conduct a calibration and linearity check after assembling the analysis system and after a major change is made to the system.

5.2 *Systems drift checks.* Select the calibration gas that most closely approximates the concentration of the captured emissions for conducting the drift checks. Introduce the zero and calibration gas at the calibration valve assembly and verify that the appropriate gas flow rate and pressure are present at the FIA. Record the measurement system responses to the zero and calibration gases. The performance of the system is acceptable if the difference between the drift check measurement and the value obtained in section 5.1 is less than 3 percent of the span value. Conduct the system drift checks at the end of each run.

5.3 *System check.* Inject the high range calibration gas at the inlet to the sampling probe while the dilution air is turned off. Record the response. The performance of the system is acceptable if the measurement system response is within 5 percent of the value obtained in section 5.1 for the high range calibration gas. Conduct a system check before and after each test run.

5.4 *Analysis audit.* Immediately before each test analyze an audit cylinder as described in section 5.2. The analysis audit must agree with the audit cylinder concentration within 10 percent.

6. NOMENCLATURE

A_i = area of NDO i, ft^2.

A_N = total area of all NDO's in the enclosure, ft^2.

C_{Bi} = corrected average VOC concentration of background emissions at point i, ppm propane.

C_B = average background concentration, ppm propane.

C_{Gj} = corrected average VOC concentration of captured emissions at point j, ppm propane.

C_{DH} = average measured concentration for the drift check calibration gas, ppm propane.

C_{DO} = average system drift check concentration for zero concentration gas, ppm propane.

C_H = actual concentration of the drift check calibration gas, ppm propane.

C_i = uncorrected average background VOC concentration measured at point i, ppm propane.
C_j = uncorrected average VOC concentration measured at point j, ppm propane.
G = total VOC content of captured emissions, kg.
$K_1 = 1.830 \times 10^{-6}$ kg/ (m^3-ppm).
n = number of measurement points.
Q_{Gj} = average effluent volumetric flow rate corrected to standard conditions at captured emissions point j, m^3/min.
T_C = total duration of captured emissions sampling run, min.

7. CALCULATIONS

7.1 *Total VOC captured emissions.*

$$G = \sum_{j=1}^{n} \left(C_{Gj} - C_B\right) Q_{Gj} T_C K_1 \qquad \text{Eq. 1}$$

7.2 *VOC concentration of the captured emissions at point j.*

$$C_{Gj} = \left(C_j - C_{DO}\right) \frac{C_H}{C_{DH} - C_{DO}} \qquad \text{Eq. 2}$$

7.3. *Background VOC concentration at point i.*

$$C_{Bi} = \left(C_i - C_{DO}\right) \frac{C_H}{C_{DH} - C_{DO}} \qquad \text{Eq. 3}$$

7.4 *Average background concentration.*

$$C_B = \frac{\sum_{i=1}^{n} C_{Bi} A_i}{n A_N} \qquad \text{Eq. 4}$$

NOTE: If the concentration at each point is with in 20 percent of the average concentration of all points, the terms ''A_i'' and ''A_N'' may be deleted from Equation 4.

Procedure G.2—Captured VOC Emissions (Dilution Technique)

1. INTRODUCTION

1.1 *Applicability*. This procedure is applicable for determining the volatile organic compounds (VOC) content of captured gas streams. It is intended to be used as a segment in the development of a gas/gas protocol in which fugitive emissions are measured for determining VOC capture efficiency (CE) for surface coating and printing operations. A dilution system is used to reduce the VOC concentration of the captured emission to about the same concentration as the fugitive emission. The procedure may not be acceptable in certain site-specific situations, *e.g.*, when: (1) Direct fired heaters or other circumstances affect the quantity of VOC at the control device inlet; and (2) particulate organic aerosols are formed in the process and are present in the captured emissions.

1.2 *Principle*. The amount of VOC captured (G) is calculated as the sum of the products of the VOC content (C_{Gj}), the flow rate (Q_{Gj}), and the sampling time (T_C) from each captured emissions point.

1.3 *Estimated measurement uncertainty*. The measurement uncertainties are estimated for each captured or fugitive emissions point as follows: O_{Gj}=±5.5 percent and C_{Gj}=±5 percent. Based on these numbers, the probable uncertainty for G is estimated at about ±7.4 percent.

1.4 *Sampling requirements*. A capture efficiency test shall consist of at least three sampling runs. The sampling time for each run should be at least 8 hours, unless otherwise approved.

1.5 *Notes*. Because this procedure is often applied in highly explosive areas, caution and care should be exercised in choosing appropriate equipment and installing and using the equipment. Mention of trade names or company products does not constitute endorsement. All gas concentrations (percent, ppm) are by volume, unless otherwise noted.

2. APPARATUS AND REAGENTS

2.1 *Gas VOC concentration*. A schematic of the measurement system is shown in Figure 1. The main components are described below:

2.1.1 *Dilution system*. A Kipp in-stack dilution probe and controller or similar device may be used. The dilution rate may be changed by substituting different critical orifices or adjustments of the aspirator supply pressure. The dilution system shall be heated to prevent VOC condensation.

NOTE: An out-of-stack dilution device may be used.

2.1.2 *Calibration valve assembly*. Three-way valve assembly at the outlet of sample probe to direct the zero and calibration gases to the analyzer. Other methods, such as quick-connect lines, to route calibration gases to the outlet of the sample probe are acceptable.

2.1.3 *Sample line*. Stainless steel or Teflon tubing to transport the sample gas to the analyzer. The sample line must be heated to prevent condensation.

2.1.4 *Sample pump*. A leak-free pump, to pull the sample gas through the system at a flow rate sufficient to minimize the response time of the measurement system. The components of the pump that contract the gas stream shall be constructed of stainless steel or Teflon. The sample pump must be heated to prevent condensation.

2.1.5 *Sample flow rate control*. A sample flow rate control valve and rotameter, or equivalent, to maintain a constant sampling rate within 10 percent. The flow control

valve and rotameter must be heated to prevent condensation. A control valve may also be located on the sample pump bypass loop to assist in controlling the sample pressure and flow rate.

2.1.6 *Sample gas manifold*. Capable of diverting a portion of the sample gas stream to the flame ionization analyzer (FIA), and the remainder to the bypass discharge vent. The manifold components shall be constructed of stainless steel or Teflon. If captured or fugitive emissions are to be measured at multiple locations, the measurement system shall be designed to use separate sampling probes, lines, and pumps for each measurement location and a common sample gas manifold and FIA. The sample gas manifold and connecting lines to the FIA must be heated to prevent condensation.

2.1.7 *Organic concentration analyzer*. An FIA with a span value of 1.5 times the expected concentration as propane; however, other span values may be used if it can be demonstrated that they would provide more accurate measurements.

The system shall be capable of meeting or exceeding the following specifications:

2.1.7.1 *Zero drift*. Less than ±3.0 percent of the span value.

2.1.7.2 *Calibration drift*. Less than ±3.0 percent of the span value.

2.1.7.3 *Calibration error*. Less than ±5.0 percent of the calibration gas value.

2.1.7.4 *Response time*. Less than 30 seconds.

2.1.7.8 *Integrator/data acquisition system*. An analog or digital device or computerized data acquisition system used to integrate the FIA response or compute the average response and record measurement data. The minimum data sampling frequency for computing average or integrated values is one measurement value every 5 seconds. The device shall be capable of recording average values at least once per minute.

2.1.9 *Calibration and other gases*. Gases used for calibration, fuel, and combustion air (if required) are contained in compressed gas cylinders. All calibration gases shall be traceable to NIST standards and shall be certified by the manufacturer to ±1 percent of the tag value. Additionally, the manufacturer of the cylinder should provide a recommended shelf life for each calibration gas cylinder over which the concentration does not change more than ±2 percent from the certified value. For calibration gas values not generally available, alternative methods for preparing calibration gas mixtures, such as dilution system, may be used with prior approval.

2.1.9.1 *Fuel*. A 40 percent H_2/60 percent He or 40 percent H_2/60 percent N_2 gas mixture is recommended to avoid an oxygen synergism effect that reportedly occurs when oxygen concentration varies signficantly from a mean value.

2.1.9.2. *Carrier gas and dilution air supply*. High purity air with less than 1 ppm of organic material (as propane or carbon equivalent) or less than 0.1 percent of the span value, whichever is greater.

2.1.9.3 *FIA linearity calibration gases*. Low-, mid-, and high-range gas mixture standards with nominal propane concentrations of 20–30, 45–55, and 70–80 percent of the span value in air, respectively. Other calibration values and other span values may be used if it can be shown that more accurate measurements would be achieved.

2.1.9.4 *Dilution check gas*. Gas mixture standard containing propane in air, approximately half the span value after dilution.

2.1.10 *Particulate filter*. An in-stack or an out-of-stack glass fiber filter is recommended if exhaust gas particulate loading is significant. An out-of-stack filter must be heated to prevent any condensation unless it can be demonstrated that no condensation occurs.

2.2 *Captured emissions volumetric flow rate*.

2.2.1 *Method 2 or 2A apparatus*. For determining volumetric flow rate.

2.2.2 *Method 3 apparatus and reagents*. For determining molecular weight of the gas stream. An estimate of the molecular weight of the gas stream may be used if it can be justified.

2.2.3 *Method 4 apparatus and reagents*. For determining moisture content, if necessary.

3. Determination of Volumetric Flow Rate of Captured Emissions

3.1 Locate all points where emissions are captured from the affected facility. Using Method 1, determine the sampling points. Be sure to check each site for cyclonic or swirling flow.

3.2 Measure the velocity at each sampling site at least once every hour during each sampling run using Method 2 or 2A.

4. Determination of VOC Content of Captured Emissions

4.1 *Analysis duration*. Measure the VOC responses at each captured emissions point during the entire test run or, if applicable, while the process is operating. If there are multiple captured emissions locations, design a sampling system to allow a single FIA to be used to determine the VOC responses at all sampling locations.

4.2 *Gas VOC concentration*.

4.2.1 Assemble the sample train as shown in Figure 1. Calibrate the FIA according to the procedure in section 5.1.

4.2.2 Set the dilution ratio and determine the dilution factor according to the procedure in section 5.3.

4.2.3 Conduct a system check according to the procedure in section 5.4.

4.2.4 Install the sample probe so that the probe is centrally located in the stack, pipe,

or duct, and is sealed tightly at the stack port connection.

4.2.5 Inject zero gas at the calibration valve assembly. Measure the system response time as the time required for the system to reach the effluent concentration after the calibration valve has been returned to the effluent sampling position.

4.2.6 Conduct a system check before and a system drift check after each sampling run according to the procedures in sections 5.2 and 5.4. If the drift check following a run indicates unacceptable performance, the run is not valid. The tester may elect to perform system drift checks during the run not to exceed one drift check per hour.

4.2.7 Verify that the sample lines, filter, and pump temperatures are 120 ±5 °C.

4.2.8 Begin sampling at the start of the test period and continue to sample during the entire run. Record the starting and ending times and any required process information as appropriate. If multiple captured emission locations are sampled using a single FIA, sample at each location for the same amount of time (*e.g.*, 2 minutes) and continue to switch from one location to another for the entire test run. Be sure that total sampling time at each location is the same at the end of the test run. Collect at least 4 separate measurements from each sample point during each hour of testing. Disregard the measurements at each sampling location until two times the response time of the measurement system has elapsed. Continue sampling for at least 1 minute and record the concentration measurements.

4.3 *Background concentration.*

4.3.1 Locate all NDO's of the TTE. A sampling point shall be centrally located outside of the TTE at 4 equivalent diameters from each NDO, if possible. If there are more than 6 NDO's, choose 6 sampling points evenly spaced among the NDO's.

4.3.2 Assemble the sample train as shown in Figure 2. Calibrate the FIA and conduct a system check according to the procedures in sections 5.1 and 5.4.

4.3.3 Position the probe at the sampling location.

4.3.4 Determine the response time, conduct the system check and sample according to the procedures described in sections 4.2.4 to 4.2.8.

4.4 *Alternative procedure.* The direct interface sampling and analysis procedure described in section 7.2 of Method 18 may be used to determine the gas VOC concentration. The system must be designed to collect and analyze at least one sample every 10 minutes.

5. Calibration and Quality Assurance

5.1 *FIA Calibration and linearity check.* Make necessary adjustments to the air and fuel supplies for the FIA and ignite the burner. Allow the FIA to warm up for the period recommended by the manufacturer. Inject a calibration gas into the measurement system after the dilution system and adjust the back-pressure regulator to the value required to achieve the flow rates specified by the manufacturer. Inject the zero- and the high-range calibration gases and adjust the analyzer calibration to provide the proper responses. Inject the low- and mid-range gases and record the responses of the measurement system. The calibration and linearity of the system are acceptable if the responses for all four gases are within 5 percent of the respective gas values. If the performance of the system is not acceptable, repair or adjust the system and repeat the linearity check. Conduct a calibration and linearity check after assembling the analysis system and after a major change is made to the system.

5.2 *Systems drift checks.* Select the calibration gas that most closely approximates the concentration of the diluted captured emissions for conducting the drift checks. Introduce the zero and calibration gas at the calibration valve assembly and verify that the appropriate gas flow rate and pressure are present at the FIA. Record the measurement system responses to the zero and calibration gases. The performance of the system is acceptable if the difference between the drift check measurement and the value obtained in section 5.1 is less than 3 percent of the span value. Conduct the system drift check at the end of each run.

5.3 *Determination of dilution factor.* Inject the dilution check gas into the measurement system before the dilution system and record the response. Calculate the dilution factor using Equation 3.

5.4 *System check.* Inject the high range calibration gas at the inlet to the sampling probe while the dilution air is turned off. Record the response. The performance of the system is acceptable if the measurement system response is within 5 percent of the value obtained in section 5.1 for the high range calibration gas. Conduct a system check before and after each test run.

5.5 *Analysis audit.* Immediately before each test analyze an audit cylinder as described in section 5.2. The analysis audit must agree with the audit cylinder concentration within 10 percent.

6. Nomenclature

A_i = area of NDO i, ft^2.

A_N = total area of all NDO's in the enclosure, ft^2.

C_A = actual concentration of the dilution check gas, ppm propane.

C_{Bi} = corrected average VOC concentration of background emissions at point i, ppm propane.

C_B = average background concentration, ppm propane.

C_{DH} = average measured concentration for the drift check calibration gas, ppm propane.

C_{DO} = average system drift check concentration for zero concentration gas, ppm propane.

C_H = actual concentration of the drift check calibration, gas, ppm propane.

C_i = uncorrected average background VOC concentration measured at point i, ppm propane.

C_j = uncorrected average VOC concentration measured at point j, ppm propane.

C_M = measured concentration of the dilution check gas, ppm propane.

D_F = dilution factor.

G = total VOC content of captured emissions, kg.

$K_1 = 1.830 \times 10^{-6}$ kg/(m³-ppm).

n = number of measurement points.

Q_{Gj} = average effluent volumetric flow rate corrected to standard conditions at captured emissions point j, m³/min.

T_C = total duration of capture efficiency sampling run, min.

7. CALCULATIONS

7.1 *Total VOC captured emissions.*

$$G = \sum_{j=1}^{n} C_{Gj} Q_{Gj} T_C K_1 \qquad \text{Eq. 1}$$

7.2 *VOC concentration of the captured emissions to point j.*

$$C_{Gj} = DF\left(C_j + -C_{DO}\right)\frac{C_H}{C_{DH} - C_{DO}} \qquad \text{Eq. 2}$$

7.3 *Dilution factor.*

$$DF = \frac{C_A}{C_M} \qquad \text{Eq. 3}$$

7.4 *Background VOC concentration at point i.*

$$C_{Bi} = \left(C_i - C_{DO}\right)\frac{C_H}{C_{DH} - C_{DO}} \qquad \text{Eq. 4}$$

7.5 *Average background concentration.*

$$C_B = \frac{\sum_{i=1}^{n} C_{Bi} A_i}{n A_N} \qquad \text{Eq. 5}$$

NOTE: If the concentration at each point is within 20 percent of the average concentration of all points, the terms ''A_i'' and ''A_N'' may be deleted from Equation 4.

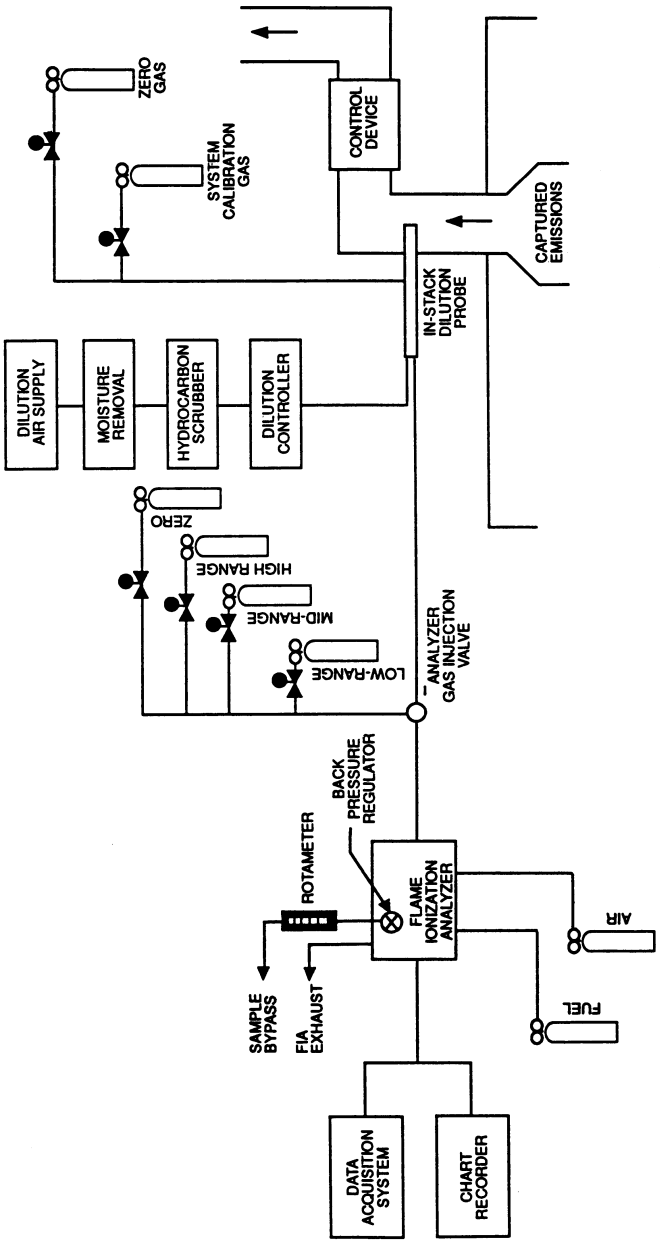

Figure 1. Captured emissions measurement system.

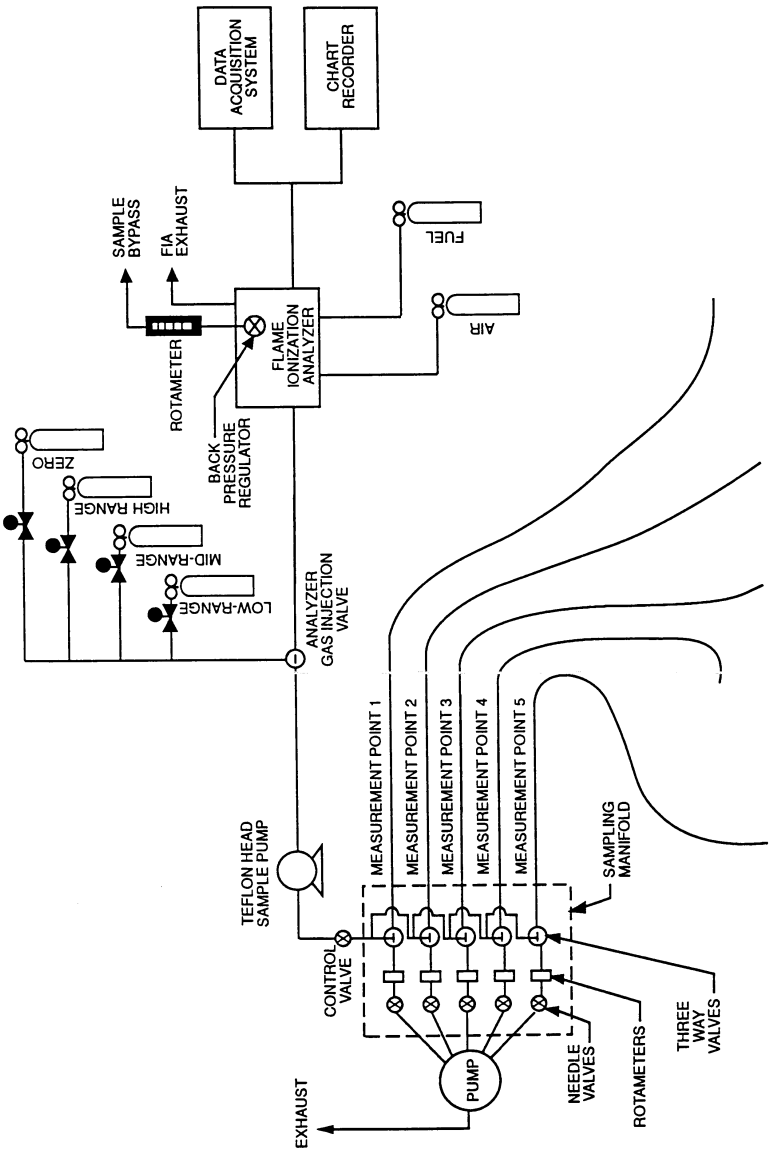

Figure 2. Background measurement system.

Procedure F.2—Fugitive VOC Emissions from Building Enclosures

1. Introduction

1.1 *Applicability.* This procedure is applicable for determining the fugitive volatile organic compounds (VOC) emissions from a building enclosure (BE). It is intended to be used as a segment in the development of liquid/gas or gas/gas protocols for determining VOC capture efficiency (CE) for surface coating and printing operations.

1.2 *Principle.* The total amount of fugitive VOC emissions (F_B) from the BE is calculated as the sum of the products of the

VOC content (C_{Fj}) of each fugitive emissions point, its flow rate (Q_{Fj}), and time (T_F).

1.3 *Measurement uncertainty*. The measurement uncertainties are estimated for each fugitive emissions point as follows: Q_{Fj}=±5.0 percent and C_{Fj}=±5.0 percent. Based on these numbers, the probable uncertainty for F_B is estimated at about ±11.2 percent.

1.4 *Sampling requirements*. A capture efficiency test shall consist of at least three sampling runs. The sampling time for each run should be at least 8 hours, unless otherwise approved.

1.5 *Notes*. Because this procedure is often applied in highly explosive areas, caution and care should be exercised in choosing appropriate equipment and installing and using the equipment. Mention of trade names or company products does not constitute endorsement. All gas concentrations (percent, ppm) are by volume, unless otherwise noted.

2. Apparatus and Reagents

2.1 *Gas VOC concentration*. A schematic of the measurement system is shown in Figure 1. The main components are described below:

2.1.1 *Sample probe*. Stainless steel, or equivalent. The probe shall be heated to prevent VOC condensation.

2.1.2 *Calibration valve assembly*. Three-way valve assembly at the outlet of sample probe to direct the zero and calibration gases to the analyzer. Other methods, such as quick-connect lines, to route calibration gases to the outlet of the sample probe are acceptable.

2.1.3 *Sample line*. Stainless steel or Teflon tubing to transport the sample gas to the analyzer. The sample line must be heated to prevent condensation.

2.1.4 *Sample pump*. A leak-free pump, to pull the sample gas through the system at a flow rate sufficient to minimize the response time of the measurement system. The components of the pump that contact the gas stream shall be constructed of staimust be heated to prevent condensation.

2.1.5 *Sample flow rate control*. A sample flow rate control valve and rotameter, or equivalent, to maintain a constant sampling rate within 10 percent. The flow rate control valve and rotameter must be heated to prevent condensation. A control valve may also be located on the sample pump bypass loop to assist in controlling the sample pressure and flow rate.

2.1.6 *Sample gas manifold*. Capable of diverting a portion of the sample gas stream to the flame ionization analyzer (FIA), and the remainder to the bypass discharge vent. The manifold components shall be constructed of stainless steel or Teflon. If emissions are to be measured at multiple locations, the measurement system shall be designed to use separate sampling probes, lines, and pumps for each measurement location and a common sample gas manifold and FIA. The sample gas manifold must be heated to prevent condensation.

2.1.7 *Organic Concentration Analyzer*. An FIA with a span value of 1.5 times the expected concentration as propane; however, other span values may be used if it can be demonstrated that they would provide more accurate measurements. The system shall be capable or exceeding the following specifications:

2.1.7.1 *Zero drift*. Less than ±3.0 percent of the span value.

2.1.7.2 *Calibration drift*. Less than ±3.0 percent of the span value.

2.1.7.3 *Calibration error*. Less than ±5.0 percent of the calibration gas value.

2.1.7.4 *Response time*. Less than 30 seconds.

2.1.8 *Integrator/data acquisition system*. An analog or digital device or computerized data acquisition system used to integrate the FIA response or compute the average response and record measurement data. The minimum data sampling frequency for computing average or integrated values is one measurement value every 5 seconds. The device shall be capable of recording average values at least once per minute.

2.1.9 *Calibration and other gases*. Gases used for calibration, fuel, and combustion air (if required) are contained in compressed gas cylinders. All calibration gases shall be traceable to NIST standards and shall be certified by the manufacturer to ±1 percent of the tag value. Additionally, the manufacturer of the cylinder should provide a recommended shelf life for each calibration gas cylinder over which the concentration does not change more than ±2 percent from the certified value. For calibration gas values not generally available, alternative methods for preparing calibration gas mixtures, such as dilution systems, may be used with prior approval.

2.1.9.1 *Fuel*. A 40 percent H_2/60 percent He or 40 percent H_2/60 percent N_2 gas mixture is recommended to avoid an oxygen synergism effect that reportedly occurs when oxygen concentration varies significantly from a mean value.

2.1.9.2 *Carrier gas*. High purity air with less than 1 ppm of organic material (propane or carbon equivalent) or less than 0.1 percent of the span value, whichever is greater.

2.1.9.3 *FIA linearity calibration gases*. Low-, mid-, and high-range gas mixture standards with nominal propane concentrations of 20–30, 45–55, and 70–80 percent of the span value in air, respectively. Other calibration values and other span values may be used if it can be shown that more accurate measurements would be achieved.

2.1.10 *Particulate filter*. An in-stack or an out-of-stack glass fiber filter is recommended if exhaust gas particulate loading is significant. An out-of-stack filter must be heated to prevent any condensation unless it

can be demonstrated that no condensation occurs.

2.2 *Fugitive emissions volumetric flow rate.*

2.2.1 *Flow direction indicators.* Any means of indicating inward or outward flow, such as light plastic film or paper streamers, smoke tubes, filaments, and sensory perception.

2.2.2 *Method 2 or 2A apparatus.* For determining volumetric flow rate. Anemometers or similar devices calibrated according to the manufacturer's instructions may be used when low velocities are present. Vane anemometers (Young-maximum response propeller), specialized pitots with electronic manometers (*e.g.,* Shortridge Instruments Inc., Airdata Multimeter 860) are commercially available with measurement thresholds of 15 and 8 mpm (50 and 25 fpm), respectively.

2.2.3 *Method 3 apparatus and reagents.* For determining molecular weight of the gas stream. An estimate of the molecular weight of the gas stream may be used if it can be justified.

2.2.4 *Method 4 apparatus and reagents.* For determining moisture content, if necessary.

3. Determination of Volumetric Flow Rate of Fugitive Emissions

3.1 *Preliminary determinations.* The purpose of this exercise is to determine which exhaust points should be measured for volumetric flow rates and VOC concentrations.

3.1.1 *Forced draft openings.* Identify all forced draft openings. Determine the volumetric flow rate according to Method 2.

3.1.2 *NDO's exhaust points.* The NDO's in the roof of a facility are considered to be exhaust points. Determine volumetric flow rate from these NDO's. Divide the cross-sectional area according to Method 1 using 12 equal areas. Use the appropriate velocity measurement devices, *e.g.,* propeller anemometers.

3.1.3 *Other NDO's.*

3.1.3.1 This step is optional. Determine the exhaust flow rate, including that of the control device, from the enclosure and the intake air flow rate. If the exhaust flow rate divided by the intake air flow rate is greater than 1.1, then all other NDO's are not considered to be significant exhaust points.

3.1.3.2 If the option above is not taken, identify all other NDO's and other potential points through which fugitive emissions may escape the enclosure. Then use the following criteria to determine whether flow rates and VOC concentrations need to be measured:

3.1.3.2.1 Using the appropriate flow direction indicator, determine the flow direction. An NDO with zero or inward flow is not an exhaust point.

3.1.3.2.2 Measure the outward volumetric flow rate from the remainder of the NDO's. If the collective flow rate is 2 percent, or less, of the flow rate from sections 3.1.1 and 3.1.2, then these NDO's, except those within two equivalent diameters (based on NDO opening) from VOC sources, may be considered to be non-exhaust points.

3.1.3.2.3 If the percentage calculated in section 3.1.3.2.2 is greater than 2 percent, those NDO's (except those within two equivalent diameters from VOC sources) whose volumetric flow rate totals 2 percent of the flow rate from sections 3.1.1 and 3.1.2 may be considered as non-exhaust points. All remaining NDO's shall be measured for volumetric flow rate and VOC concentrations during the CE test.

3.1.3.2.4 The tester may choose to measure VOC concentrations at the forced exhaust points and the NDO's. If the total VOC emissions from the NDO's are less than 2 percent of the emissions from the forced draft and roof NDO's, then these NDO's may be eliminated from further consideration.

3.2 *Determination of flow rates.*

3.2.1 Measure the volumetric flow rate at all locations identified as exhaust points in section 3.1. Divide each exhaust opening into 9 equal areas for rectangular openings and 8 for circular openings.

3.2.2 Measure the velocity at each site at least once every hour during each sampling run using Method 2 or 2A, if applicable, or using the low velocity instruments in section 2.2.2.

4. Determination of VOC Content of Fugitive Emissions

4.1 *Analysis duration.* Measure the VOC responses at each fugitive emission point during the entire test run or, if applicable, while the process is operating. If there are multiple emissions locations, design a sampling system to allow a single FIA to be used to determine the VOC responses at all sampling locations.

4.2 Gas VOC concentration.

4.2.1 Assemble the sample train as shown in Figure 1. Calibrate the FIA and conduct a system check according to the procedures in sections 5.1 and 5.3, respectively.

4.2.2 Install the sample probe so that the probe is centrally located in the stack, pipe, or duct, and is sealed tightly at the stack port connection.

4.2.3 Inject zero gas at the calibration valve assembly. Allow the measurement system response to reach zero. Measure the system response time as the time required for the system to reach the effluent concentration after the calibration valve has been returned to the effluent sampling position.

4.2.4 Conduct a system check before and a system drift check after each sampling run according to the procedures in sections 5.2 and 5.3. If the drift check following a run indicates unacceptable performance, the run is not valid. The tester may elect to perform drift checks during the run not to exceed one drift check per hour.

4.2.5 Verify that the sample lines, filter, and pump temperatures are 120 ±5 °C.

4.2.6 Begin sampling at the start of the test period and continue to sample during the entire run. Record the starting and ending times and any required process information as appropriate. If multiple emission locations are sampled using a single FIA, sample at each location for the same amount of time (*e.g.*, 2 minutes) and continue to switch from one location to another for the entire test run. Be sure that total sampling time at each location is the same at the end of the test run. Collect at least 4 separate measurements from each sample point during each hour of testing. Disregard the response measurements at each sampling location until two times the response time of the measurement system has elapsed. Continue sampling for at least 1 minute and record the concentration measurements.

4.3 *Alternative procedure*. The direct interface sampling and analysis procedure described in section 7.2 of Method 18 may be used to determine the gas VOC concentration. The system must be designed to collect and analyze at least one sample every 10 minutes.

5. Calibration and Quality Assurance

5.1 *FIA calibration and linearity check*. Make necessary adjustments to the air and fuel supplies for the FIA and ignite the burner. Allow the FIA to warm up for the period recommended by the manufacturer. Inject a calibration gas into the measurement system and adjust the back-pressure regulator to the value required to achieve the flow rates specified by the manufacturer. Inject the zero- and the high-range calibration gases and adjust the analyzer calibration to provide the proper responses. Inject the low- and mid-range gases and record the responses of the measurement system. The calibration and linearity of the system are acceptable if the responses for all four gases are within 5 percent of the respective gas values. If the performance of the system is not acceptable, repair or adjust the system and repeat the linearity check. Conduct a calibration and linearity check after assembling the analysis system and after a major change is made to the system.

5.2 *Systems drift checks*. Select the calibration gas that most closely approximates the concentration of the captured emissions for conducting the drift checks. Introduce the zero and calibration gas at the calibration valve assembly and verify that the appropriate gas flow rate and pressure are present at the FIA. Record the measurement system responses to the zero and calibration gases. The performance of the system is acceptable if the difference between the drift check measurement and the value obtained in section 5.1 is less than 3 percent of the span value. Conduct a system drift check at the end of each run.

5.3 *System check*. Inject the high range calibration gas at the inlet of the sampling probe and record the response. The performance of the system is acceptable if the measurement system response is within 5 percent of the value obtained in section 5.1 for the high range calibration gas. Conduct a system check before each test run.

5.4 *Analysis audit*. Immediately before each test analyze an audit cylinder as described in section 5.2. The analysis audit must agree with the audit cylinder concentration within 10 percent.

6. Nomenclature

C_{DH} = average measured concentration for the drift check calibration gas, ppm propane.

C_{DO} = average system drift check concentration for zero concentration gas, ppm propane.

C_{Fj} = corrected average VOC concentration of fugitive emissions at point j, ppm propane.

C_H = actual concentration of the drift check calibration gas, ppm propane.

C_j = uncorrected average VOC concentration measured at point j, ppm propane.

F_B = total VOC content of fugitive emissions from the building, kg.

$K_1 = 1.830 \times 10^{-6}$ kg/(m^3-ppm).

n = number of measurement points.

Q_{Fj} = average effluent volumetric flow rate corrected to standard conditions at fugitive emissions point j, m^3/min.

T_F = total duration of capture efficiency sampling run, min.

7. Calculations

7.1 *Total VOC fugitive emissions from the building*.

$$F_B = \sum_{j=1}^{n} C_{Fj} Q_{Fj} T_F K_1 \qquad \text{Eq. 1}$$

7.2 *VOC concentration of the fugitive emissions at point j*.

$$C_{Fj} = \left(C_j - C_{DO}\right) \frac{C_H}{C_{DH} - C_{DO}} \qquad \text{Eq. 2}$$

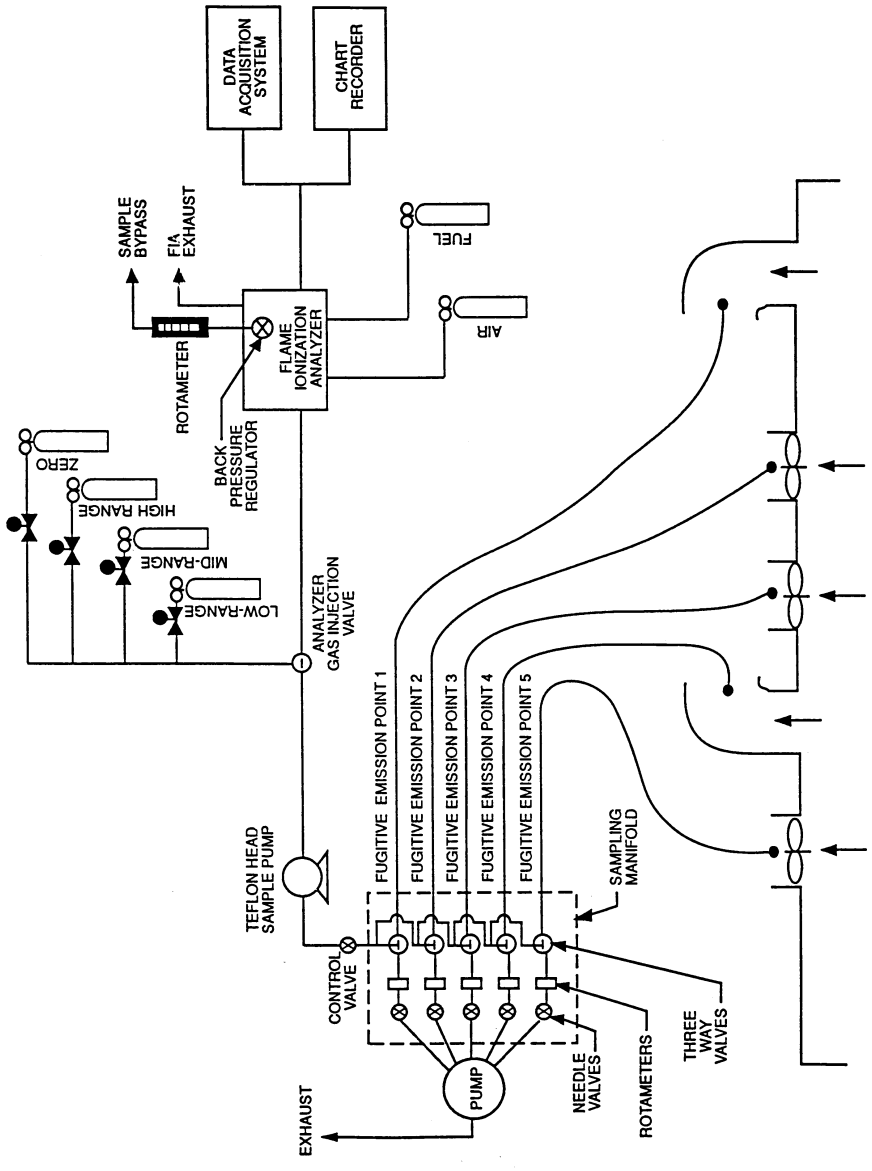

Figure 1. Fugitive emissions measurement system.

Procedure F.1—Fugitive VOC Emissions From Temporary Enclosures

1. Introduction

1.1 *Applicability*. This procedure is applicable for determining the fugitive volatile organic compounds (VOC) emissions from a temporary total enclosure (TTE). It is intended to be used as a segment in the development of liquid/gas or gas/gas protocols for determining VOC capture efficiency (CE) for surface coating and printing operations.

1.2 *Principle*. The amount of fugitive VOC emissions (F) from the TTE is calculated as the sum of the products of the VOC content

(C_{Fj}), the flow rate (Q_{Fj}), and the sampling time (T_F) from each fugitive emissions point.

1.3 *Estimated measurement uncertainty*. The measurement uncertainties are estimated for each fugitive emission point as follows: Q=±5.5 percent and C_{Fj}=±5.0 percent. Based on these numbers, the probable uncertainty for F is estimated at about ±7.4 percent.

1.4 *Sampling requirements*. A capture efficiency test shall consist of at least three sampling runs. The sampling time for each run should be at least 8 hours, unless otherwise approved.

1.5 *Notes*. Because this procedure is often applied in highly explosive areas, caution and care should be exercised in choosing appropriate equipment and installing and using the equipment. Mention of trade names or company products does not constitute endorsement. All gas concentrations (percent, ppm) are by volume, unless otherwise noted.

2. Apparatus and Reagents

2.1 *Gas VOC concentration*. A schematic of the measurement system is shown in Figure 1. The main components are described below:

2.1.1 *Sample probe*. Stainless steel, or equivalent. The probe shall be heated to prevent VOC condensation.

2.1.2 *Calibration valve assembly*. Three-way valve assembly at the outlet of sample probe to direct the zero and calibration gases to the analyzer. Other methods, such as quick-connect lines, to route calibration gases to the outlet of the sample probe are acceptable.

2.1.3 *Sample line*. Stainless steel or Teflon tubing to transport the sample gas to the analyzer. The sample line must be heated to prevent condensation.

2.1.4 *Sample pump*. A leak-free pump, to pull the sample gas through the system at a flow rate sufficient to minimize the response time of the measurement system. The components of the pump that contact the gas stream shall be constructed of stainless steel or Teflon. The sample pump must be heated to prevent condensation.

2.1.5 *Sample flow rate control*. A sample flow rate control valve and rotameter, or equivalent, to maintain a constant sampling rate within 10 percent. The flow control valve and rotameter must be heated to prevent condensation. A control valve may also be located on the sample pump bypass loop to assist in controlling the sample pressure and flow rate.

2.1.6 *Sample gas manifold*. Capable of diverting a portion of the sample gas stream to the flame ionization analyzer (FIA), and the remainder to the bypass discharge vent. The manifold components shall be constructed of stainless steel or Teflon. If emissions are to be measured at multiple locations, the measurement system shall be designed to use separate sampling probes, lines, and pumps for each measurement location and a common sample gas manifold and FIA. The sample gas manifold and connecting lines to the FIA must be heated to prevent condensation.

2.1.7 *Organic concentration analzyer*. An FIA with a span value of 1.5 times the expected concentration as propane; however, other span values may be used if it can be demonstrated that they would provide more accurate measurements. The system shall be capable of meeting or exceeding the following specifications:

2.1.7.1 *Zero drift*. Less than ±3.0 percent of the span value.

2.1.7.2 *Calibration drift*. Less than ±3.0 percent of the span value.

2.1.7.3 *Calibration error*. Less than ±5.0 percent of the calibration gas value.

2.1.7.4 *Response time*. Less than 30 seconds.

2.1.8 Integrator/data acquisition system. An analog or digital device or computerized data acquisition system used to integrate the FIA response or compute the average response and record measurement data. The minimum data sampling frequency for computing average or integrated values is one measurement value every 5 seconds. The device shall be capable of recording average values at least once per minute.

2.1.9 *Calibration and other gases*. Gases used for calibration, fuel, and combustion air (if required) are contained in compressed gas cylinders. All calibration gases shall be traceable to NIST standards and shall be certified by the manufacturer to ±1 percent of the tag value. Additionally, the manufacturer of the cylinder should provide a recommended shelf life for each calibration gas cylinder over which the concentration does not change more than ±2 percent from the certified value. For calibration gas values not generally available, alternative methods for preparing calibration gas mixtures, such as dilution systems, may be used with prior approval.

2.1.9.1 *Fuel*. A 40 percent H_2/60 percent He or 40 percent H_2/60 percent N_2 gas mixture is recommended to avoid an oxygen synergism effect that reportedly occurs when oxygen concentration varies significantly from a mean value.

2.1.9.2 *Carrier gas*. High purity air with less than 1 ppm of organic material (as propane or carbon equivalent) or less than 0.1 percent of the span value, whichever is greater.

2.1.9.3 *FIA linearity calibration gases*. Low-, mid-, and high-range gas mixture standards with nominal propane concentrations of 20–30, 45–55, and 70–80 percent of the span value in air, respectively. Other calibration values and other span values may be used if it can be shown that more accurate measurements would be achieved.

2.1.10 *Particulate filter*. An in-stack or an out-of-stack glass fiber filter is recommended if exhaust gas particulate loading is significant. An out-of-stack filter must be

heated to prevent any condensation unless it can be demonstrated that no condensation occurs.

2.2 *Fugitive emissions volumetric flow rate.*

2.2.1 *Method 2 or 2A apparatus.* For determining volumetric flow rate.

2.2.2 *Method 3 apparatus and reagents.* For determining molecular weight of the gas stream. An estimate of the molecular weight of the gas stream may be used if it can be justified.

2.2.3 *Method 4 apparatus and reagents.* For determining moisture content, if necessary.

2.3 *Temporary total enclosure.* The criteria for designing a TTE are discussed in Procedure T.

3. Determination of Volumetric Flow Rate of Fugitive Emissions

3.1 Locate all points where emissions are exhausted from the TTE. Using Method 1, determine the sampling points. Be sure to check each site for cyclonic or swirling flow.

3.2 Measure the velocity at each sampling site at least once every hour during each sampling run using Method 2 or 2A.

4. Determination of VOC Content of Fugitive Emissions

4.1 *Analysis duration.* Measure the VOC responses at each fugitive emission point during the entire test run or, if applicable, while the process is operating. If there are multiple emission locations, design a sampling system to allow a single FIA to be used to determine the VOC responses at all sampling locations.

4.2 *Gas VOC concentration.*

4.2.1 Assemble the sample train as shown in Figure 1. Calibrate the FIA and conduct a system check according to the procedures in sections 5.1 and 5.3, respectively.

4.2.2 Install the sample probe so that the probe is centrally located in the stack, pipe, or duct, and is sealed tightly at the stack port connection.

4.2.3 Inject zero gas at the calibration valve assembly. Allow the measurement system response to reach zero. Measure the system response time as the time required for the system to reach the effluent concentration after the calibration valve has been returned to the effluent sampling position.

4.2.4 Conduct a system check before and a system drift check after each sampling run according to the procedures in sections 5.2 and 5.3. If the drift check following a run indicates unacceptable performance, the run is not valid. The tester may elect to perform system drift checks during the run not to exceed one drift check per hour.

4.2.5 Verify that the sample lines, filter, and pump temperatures are 120 ±5 °C.

4.2.6 Begin sampling at the start of the test period and continue to sample during the entire run. Record the starting and ending times and any required process information as appropriate. If multiple emission locations are sampled using a single FIA, sample at each location for the same amount of time (*e.g.*, 2 minutes) and continue to switch from one location to another for the entire test run. Be sure that total sampling time at each location is the same at the end of the test run. Collect at least 4 separate measurements from each sample point during each hour of testing. Disregard the response measurements at each sampling location until two times the response time of the measurement system has elapsed. Continue sampling for at least 1 minute and record the concentration measurements.

4.3 *Background concentration.*

4.3.1 *Determination of VOC background concentration.*

4.3.1.1 Locate all NDO's of the TTE. A sampling point shall be centrally located outside of the TTE at 4 equivalent diameters from each NDO, if possible. If there are more than 6 NDO's, choose 6 sampling points evenly spaced among the NDO's.

4.3.1.2 Assemble the sample train as shown in Figure 2. Calibrate the FIA and conduct a system check according to the procedures in sections 5.1 and 5.3.

4.3.1.3 Position the probe at the sampling location.

4.3.1.4 Determine the response time, conduct the system check and sample according to the procedures described in sections 4.2.3 to 4.2.6.

4.4 *Alternative procedure.* The direct interface sampling and analysis procedure described in section 7.2 of Method 18 may be used to determine the gas VOC concentration. The system must be designed to collect and analyze at least one sample every 10 minutes.

5. Calibration and Quality Assurance

5.1 *FIA calibration and linearity check.* Make necessary adjustments to the air and fuel supplies for the FIA and ignite the burner. Allow the FIA to warm up for the period recommended by the manufacturer. Inject a calibration gas into the measurement system and adjust the back-pressure regulator to the value required to achieve the flow rates specified by the manufacturer. Inject the zero- and the high-range calibration gases and adjust the analyzer calibration to provide the proper responses. Inject the low- and mid-range gases and record the responses of the measurement system. The calibration and linearity of the system are acceptable if the responses for all four gases are within 5 percent of the respective gas values. If the performance of the system is not acceptable, repair or adjust the system and repeat the linearity check. Conduct a calibration and linearity check after assembling the analysis system and after a major change is made to the system.

5.2 *Systems drift checks*. Select the calibration gas concentration that most closely approximates that of the fugitive gas emissions to conduct the drift checks. Introduce the zero and calibration gas at the calibration valve assembly and verify that the appropriate gas flow rate and pressure are present at the FIA. Record the measurement system responses to the zero and calibration gases. The performance of the system is acceptable if the difference between the drift check measurement and the value obtained in section 5.1 is less than 3 percent of the span value. Conduct a system drift check at the end of each run.

5.3 *System check*. Inject the high range calibration gas at the inlet of the sampling probe and record the response. The performance of the system is acceptable if the measurement system response is within 5 percent of the value obtained in section 5.1 for the high range calibration gas. Conduct a system check before each test run.

5.4 *Analysis audit*. Immediately before each test analyze an audit cylinder as described in section 5.2. The analysis audit must agree with the audit cylinder concentration within 10 percent.

6. Nomenclature

A_i = area of NDO i, ft^2.

A_N = total area of all NDO's in the enclosure, ft^2.

C_{Bi} = corrected average VOC concentration of background emissions at point i, ppm propane.

C_B = average background concentration, ppm propane.

C_{DH} = average measured concentration for the drift check calibration gas, ppm propane.

C_{DO} = average system drift check concentration for zero concentration gas, ppm propane.

C_{Fj} = corrected average VOC concentration of fugitive emissions at point j, ppm propane.

C_H = actual concentration of the drift check calibration gas, ppm propane.

C_i = uncorrected average background VOC concentration at point i, ppm propane.

C_j = uncorrected average VOC concentration measured at point j, ppm propane.

F = total VOC content of fugitive emissions, kg.

$K_1 = 1.830 \times 10^{-6}$ kg/(m^3 – ppm).

n = number of measurement points.

Q_{Fj} = average effluent volumetric flow rate corrected to standard conditions at fugitive emissions point j, m^3/min.

T_F = total duration of fugitive emissions sampling run, min.

7. Calculations

7.1 *Total VOC fugitive emissions*.

$$\sum_{j=1}^{F=n}\left(C_{Fj} - C_B\right)Q_{Fj}T_F K_1 \qquad \text{Eq. 1}$$

7.2 *VOC concentration of the fugitive emissions at point j*.

$$C_{Fj} = \left(C_j - C_{DO}\right)\frac{C_H}{C_{DH} - C_{DO}} \qquad \text{Eq. 2}$$

7.3 *Background VOC concentration at point i*.

$$C_{Bi} = \left(C_i - C_{DO}\right)\frac{C_H}{C_{DH} - C_{DO}} \qquad \text{Eq. 3}$$

7.4 *Average background concentration*.

$$C_B = \frac{\sum_{i=1}^{n} C_{Bi}A_i}{nA_N} \qquad \text{Eq. 4}$$

Note: If the concentration at each point is within 20 percent of the average concentration of all points, the terms "A_i" and "A_N" may be deleted from Equation 4.

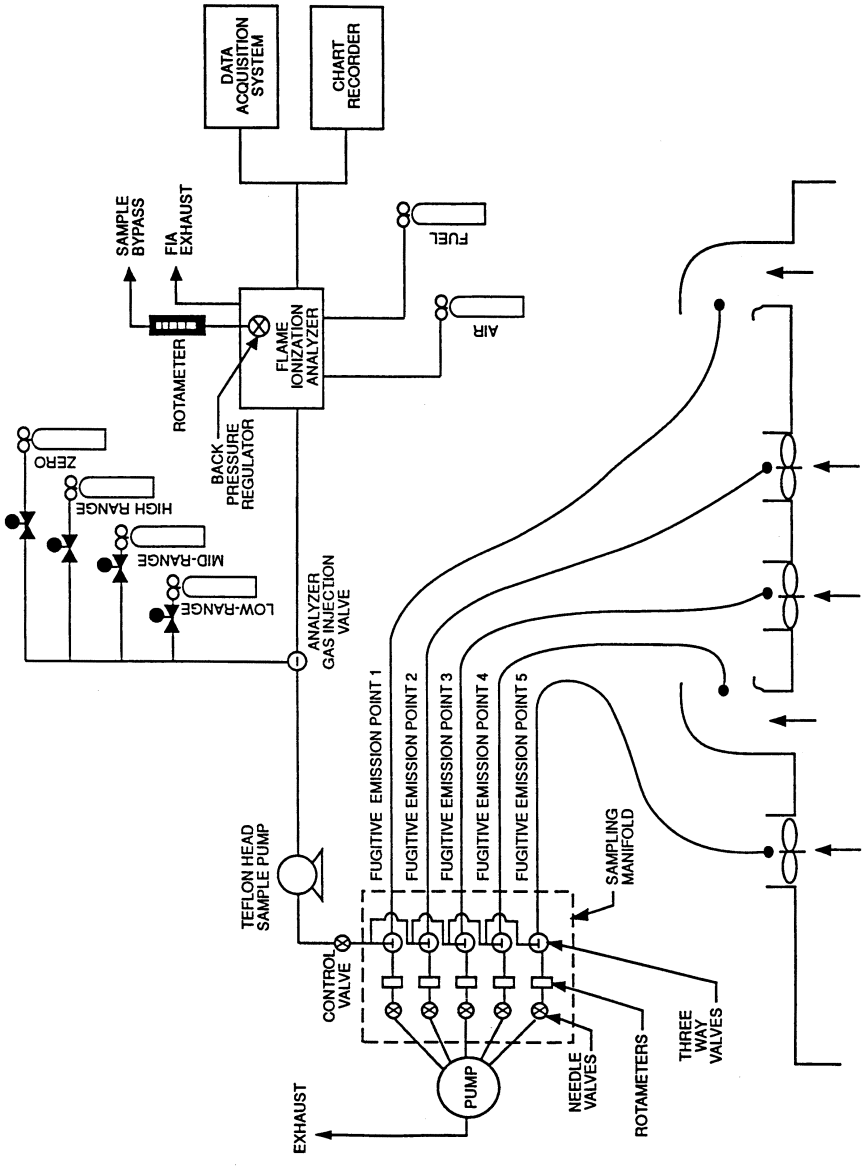

Figure 1. Fugitive emissions measurement system.

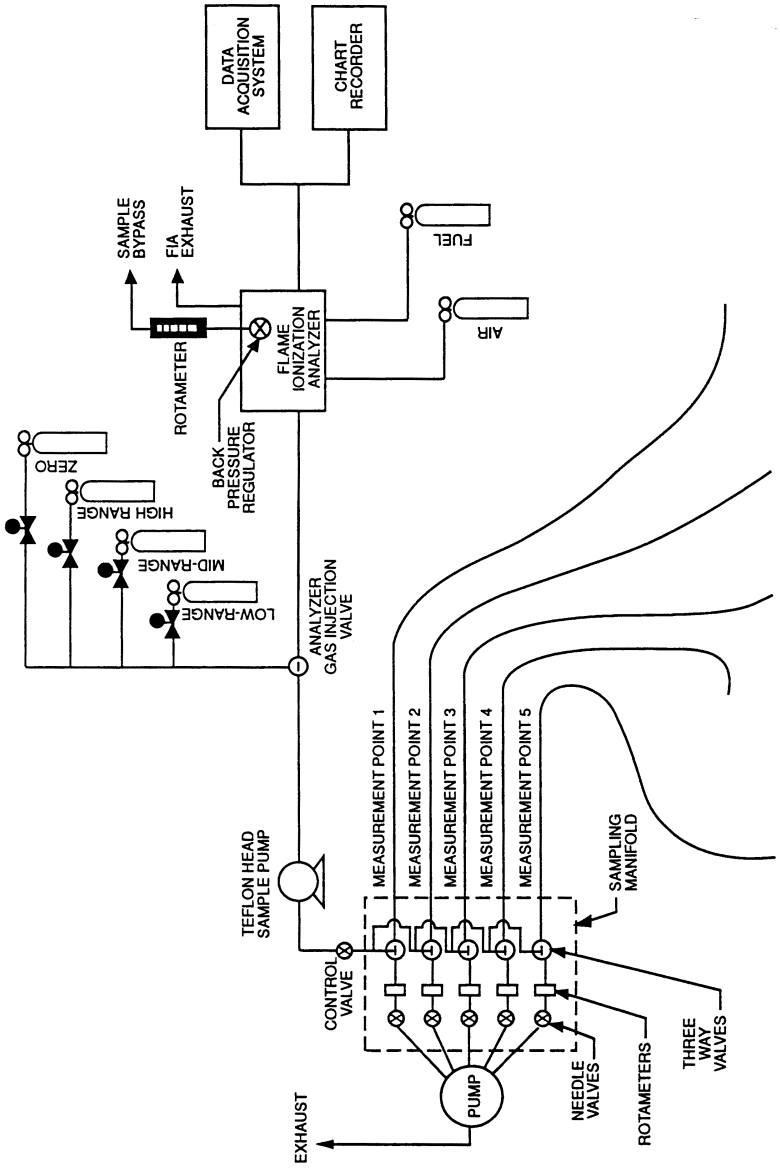

Figure 2. Background measurement system.

Procedure L—VOC Input

1. INTRODUCTION

1.1 *Applicability*. This procedure is applicable for determining the input of volatile organic compounds (VOC). It is intended to be used as a segment in the development of liquid/gas protocols for determining VOC capture efficiency (CE) for surface coating and printing operations.

1.2 *Principle*. The amount of VOC introduced to the process (L) is the sum of the products of the weight (W) of each VOC containing liquid (ink, paint, solvent, etc.) used and its VOC content (V). A sample of each

VOC containing liquid is analyzed with a flame ionization analyzer (FIA) to determine V.

1.3 *Estimated measurement uncertainty*. The measurement uncertainties are estimated for each VOC containing liquid as follows: W=±2.0 percent and V=±12.0 percent. Based on these numbers, the probable uncertainty for L is estimated at about ±12.2 percent for each VOC containing liquid.

1.4 *Sampling requirements*. A capture efficiency test shall consist of at least three sampling runs. The sampling time for each run should be at least 8 hours, unless otherwise approved.

1.5 *Notes*. Because this procedure is often applied in highly explosive areas, caution and care should be exercised in choosing appropriate equipment and installing and using the equipment. Mention of trade names or company products does not constitute endorsement. All gas concentrations (percent, ppm) are by volume, unless otherwise noted.

2. Apparatus and Reagents

2.1 *Liquid weight*.

2.1.1 *Balances/digital scales*. To weigh drums of VOC containing liquids to within 0.2 lb.

2.1.2 *Volume measurement apparatus (alternative)*. Volume meters, flow meters, density measurement equipment, etc., as needed to achieve same accuracy as direct weight measurements.

2.2 *VOC content (flame ionization analyzer technique)*. The liquid sample analysis system is shown in Figures 1 and 2. The following equipment is required:

2.2.1 *Sample collection can*. An appropriately sized metal can to be used to collect VOC containing materials. The can must be constructed in such a way that it can be grounded to the coating container.

2.2.2 *Needle valves*. To control gas flow.

2.2.3 *Regulators*. For carrier gas and calibration gas cylinders.

2.2.4 *Tubing*. Teflon or stainless steel tubing with diameters and lengths determined by connection requirements of equipment. The tubing between the sample oven outlet and the FIA shall be heated to maintain a temperature of 120 ±5 °C.

2.2.5 *Atmospheric vent*. A tee and 0- to 0.5-liter/min rotameter placed in the sampling line between the carrier gas cylinder and the VOC sample vessel to release the excess carrier gas. A toggle valve placed between the tee and the rotameter facilitates leak tests of the analysis system.

2.2.6 *Thermometer*. Capable of measuring the temperature of the hot water bath to within 1 °C.

2.2.7 *Sample oven*. Heated enclosure, containing calibration gas coil heaters, critical orifice, aspirator, and other liquid sample analysis components, capable of maintaining a temperature of 120 ±5 °C.

2.2.8 *Gas coil heaters*. Sufficient lengths of stainless steel or Teflon tubing to allow zero and calibration gases to be heated to the sample oven temperature before entering the critical orifice or aspirator.

2.2.9 *Water bath*. Capable of heating and maintaining a sample vessel temperature of 100 ±5 °C.

2.2.10 *Analytical balance*. To measure ±0.001 g.

2.2.11 *Disposable syringes*. 2-cc or 5-cc.

2.2.12 *Sample vessel*. Glass, 40-ml septum vial. A separate vessel is needed for each sample.

2.2.13 *Rubber stopper*. Two-hole stopper to accommodate 3.2-mm (⅛-in.) Teflon tubing, appropriately sized to fit the opening of the sample vessel. The rubber stopper should be wrapped in Teflon tape to provide a tighter seal and to prevent any reaction of the sample with the rubber stopper. Alternatively, any leak-free closure fabricated of non-reactive materials and accommodating the necessary tubing fittings may be used.

2.2.14 *Critical orifices*. Calibrated critical orifices capable of providing constant flow rates from 50 to 250 ml/min at known pressure drops. Sapphire orifice assemblies (available from O'Keefe Controls Company) and glass capillary tubing have been found to be adequate for this application.

2.2.15 *Vacuum gauge*. 0 -to 760-mm (0- to 30-in.) Hg U-Tube manometer or vacuum gauge.

2.2.16 *Pressure gauge*. Bourdon gauge capable of measuring the maximum air pressure at the aspirator inlet (e.g., 100 psig).

2.2.17 *Aspirator*. A device capable of generating sufficient vacuum at the sample vessel to create critical flow through the calibrated orifice when sufficient air pressure is present at the aspirator inlet. The aspirator must also provide sufficient sample pressure to operate the FIA. The sample is also mixed with the dilution gas within the aspirator.

2.2.18 *Soap bubble meter*. Of an appropriate size to calibrate the critical orifices in the system.

2.2.19 *Organic concentration analyzer*. An FIA with a span value of 1.5 times the expected concentration as propane; however other span values may be used if it can be demonstrated that they would provide more accurate measurements. The system shall be capable of meeting or exceeding the following specifications:

2.2.19.1 *Zero drift*. Less than ±3.0 percent of the span value.

2.2.19.2 *Calibration drift*. Less than ±3.0 percent of span value.

2.2.19.3 *Calibration error*. Less than ±5.0 percent of the calibration gas value.

2.2.20 *Integrator/data acquisition system*. An analog or digital device or computerized data acquisition system used to integrate the FIA response or compute the average response and record measurement data. The

minimum data sampling frequency for computing average or integrated values is one measurement value every 5 seconds. The device shall be capable of recording average values at least once per minute.

2.2.21 *Chart recorder (optional).* A chart recorder or similar device is recommended to provide a continuous analog display of the measurement results during the liquid sample analysis.

2.2.22 *Calibration and other gases.* For calibration, fuel, and combustion air (if required) contained in compressed gas cylinders. All calibration gases shall be traceable to NIST standards and shall be certified by the manufacturer to ±1 percent of the tag value. Additionally, the manufacturer of the cylinder should provide a recommended shelf life for each calibration gas cylinder over which the concentration does not change more than ±2 percent from the certified value. For calibration gas values not generally available, alternative methods for preparing calibration gas mixtures, such as dilution systems, may be used with prior approval.

2.2.22.1 *Fuel.* A 40 percent H_2/60 percent He or 40 percent H_2/60 percent N_2 gas mixture is recommended to avoid an oxygen synergism effect that reportedly occurs when oxygen concentration varies significantly from a mean value.

2.2.22.2 *Carrier gas.* High purity air with less than 1 ppm of organic material (as propane) or less than 0.1 percent of the span value, whichever is greater.

2.2.22.3 *FIA linearity calibration gases.* Low-, mid-, and high-range gas mixture standards with nominal propane concentrations of 20–30, 45–55, and 70–80 percent of the span value in air, respectively. Other calibration values and other span values may be used if it can be shown that more accurate measurements would be achieved.

2.2.22.4 *System calibration gas.* Gas mixture standard containing propane in air, approximately the undiluted VOC concentration expected for the liquid samples.

3. DETERMINATION OF LIQUID INPUT WEIGHT

3.1 *Weight difference.* Determine the amount of material introduced to the process as the weight difference of the feed material before and after each sampling run. In determining the total VOC containing liquid usage, account for: (a) The initial (beginning) VOC containing liquid mixture; (b) any solvent added during the test run; (c) any coating added during the test run; and (d) any residual VOC containing liquid mixture remaining at the end of the sample run.

3.1.1 Identify all points where VOC containing liquids are introduced to the process. To obtain an accurate measurement of VOC containing liquids, start with an empty fountain (if applicable). After completing the run, drain the liquid in the fountain back into the liquid drum (if possible), and weigh the drum again. Weigh the VOC containing liquids to ±0.5 percent of the total weight (full) or ±0.1 percent of the total weight of VOC containing liquid used during the sample run, whichever is less. If the residual liquid cannot be returned to the drum, drain the fountain into a preweighted empty drum to determine the final weight of the liquid.

3.1.2 If it is not possible to measure a single representative mixture, than weigh the various components separately (*e.g.,* if solvent is added during the sampling run, weigh the solvent before it is added to the mixture). If a fress drum of VOC containing liquid is needed during the run, then weigh both the empty drum and fresh drum.

3.2 *Volume measurement (alternative).* If direct weight measurements are not feasible, the tester may use volume meters and flow rate meters (and density measurements) to determine the weight of liquids used if it can be demonstrated that the technique produces results equivalent to the direct weight measurements. If a single representative mixture cannot be measured, measure the components separately.

4. DETERMINATION OF VOC CONTENT IN INPUT LIQUIDS

4.1 *Collection of liquid samples.*

4.1.1 Collect a 100-ml or larger sample of the VOC containing liquid mixture at each application location at the beginning and end of each test run. A separate sample should be taken of each VOC containing liquid added to the application mixture during the test run. If a fresh drum is needed during the sampling run, then obtain a sample from the fresh drum.

4.1.2 When collecting the sample, ground the sample container to the coating drum. Fill the sample container as close to the rim as possible to minimize the amount of headspace.

4.1.3 After the sample is collected, seal the container so the sample cannot leak out or evaporate.

4.1.4 Label the container to identify clearly the contents.

4.2 *Liquid sample VOC content.*

4.2.1 Assemble the liquid VOC content analysis system as shown in Figure 1.

4.2.2 Permanently identify all of the critical orifices that may be used. Calibrate each critical orifice under the expected operating conditions (i.e., sample vacuum and temperature) against a volume meter as described in section 5.3.

4.2.3 Label and tare the sample vessels (including the stoppers and caps) and the syringes.

4.2.4 Install an empty sample vessel and perform a leak test of the system. Close the carrier gas valve and atmospheric vent and evacuate the sample vessel to 250 mm (10 in.) Hg absolute or less using the aspirator. Close

the toggle valve at the inlet to the aspirator and observe the vacuum for at least one minute. If there is any change in the sample pressure, release the vacuum, adjust or repair the apparatus as necessary and repeat the leak test.

4.2.5 Perform the analyzer calibration and linearity checks according to the procedure in section 5.1. Record the responses to each of the calibration gases and the back-pressure setting of the FIA.

4.2.6 Establish the appropriate dilution ratio by adjusting the aspirator air supply or substituting critical orifices. Operate the aspirator at a vacuum of at least 25 mm (1 in.) Hg greater than the vacuum necessary to achieve critical flow. Select the dilution ratio so that the maximum response of the FIA to the sample does not exceed the high-range calibration gas.

4.2.7 Perform system calibration checks at two levels by introducing compressed gases at the inlet to the sample vessel while the aspirator and dilution devices are operating. Perform these checks using the carrier gas (zero concentration) and the system calibration gas. If the response to the carrier gas exceeds ±0.5 percent of span, clean or repair the apparatus and repeat the check. Adjust the dilution ratio as necessary to achieve the correct response to the upscale check, but do not adjust the analyzer calibration. Record the identification of the orifice, aspirator air supply pressure, FIA back-pressure, and the responses of the FIA to the carrier and system calibration gases.

4.2.8 After completing the above checks, inject the system calibration gas for approximately 10 minutes. Time the exact duration of the gas injection using a stopwatch. Determine the area under the FIA response curve and calculate the system response factor based on the sample gas flow rate, gas concentration, and the duration of the injection as compared to the integrated response using Equations 2 and 3.

4.2.9 Verify that the sample oven and sample line temperatures are 120 ±5 °C and that the water bath temperature is 100 ±5 °C.

4.2.10 Fill a tared syringe with approximately 1 g of the VOC containing liquid and weigh it. Transfer the liquid to a tared sample vessel. Plug the sample vessel to minimize sample loss. Weigh the sample vessel containing the liquid to determine the amount of sample actually received. Also, as a quality control check, weigh the empty syringe to determine the amount of material delivered. The two coating sample weights should agree within ±0.02 g. If not, repeat the procedure until an acceptable sample is obtained.

4.2.11 Connect the vessel to the analysis system. Adjust the aspirator supply pressure to the correct value. Open the valve on the carrier gas supply to the sample vessel and adjust it to provide a slight excess flow to the atmospheric vent. As soon as the initial response of the FIA begins to decrease, immerse the sample vessel in the water bath. (Applying heat to the sample vessel too soon may cause the FID response to exceed the calibrated range of the instrument, and thus invalidate the analysis.)

4.2.12 Continuously measure and record the response of the FIA until all of the volatile material has been evaporated from the sample and the instrument response has returned to the baseline (i.e., response less than 0.5 percent of the span value). Observe the aspirator supply pressure, FIA back-pressure, atmospheric vent, and other system operating parameters during the run; repeat the analysis procedure if any of these parameters deviate from the values established during the system calibration checks in Section 4.2.7. After each sample perform the drift check described in Section 5.2. If the drift check results are acceptable, calculate the VOC content of the sample using the equations in Section 7. Integrate the area under the FIA response curve, or determine the average concentration response and the duration of sample analysis.

5. Calibration and Quality Assurance

5.1 *FIA calibration and linearity check.* Make necessary adjustments to the air and fuel supplies for the FIA and ignite the burner. Allow the FIA to warm up for the period recommended by the manufacturer. Inject a calibration gas into the measurement system and adjust the back-pressure regulator to the value required to achieve the flow rates specified by the manufacturer. Inject the zero- and the high-range calibration gases and adjust the analyzer calibration to provide the proper responses. Inject the low- and mid-range gases and record the responses of the measurement system. The calibration and linearity of the system are acceptable if the responses for all four gases are within 5 percent of the respective gas values. If the performance of the system is not acceptable, repair or adjust the system and repeat the linearity check. Conduct a calibration and linearity check after assembling the analysis system and after a major change is made to the system.

5.2 *Systems drift checks.* After each sample, repeat the system calibration checks in Section 4.2.7 before any adjustments to the FIA or measurement system are made. If the zero or calibration drift exceeds ±3 percent of the span value, discard the result and repeat the analysis.

5.3 *Critical orifice calibration.*

5.3.1 Each critical orifice must be calibrated at the specific operating conditions that it will be used. Therefore, assemble all components of the liquid sample analysis system as shown in Figure 3. A stopwatch is also required.

5.3.2 Turn on the sample oven, sample line, and water bath heaters and allow the system to reach the proper operating temperature. Adjust the aspirator to a vacuum of 380 mm (15 in.) Hg vacuum. Measure the time required for one soap bubble to move a known distance and record barometric pressure.

5.3.3 Repeat the calibration procedure at a vacuum of 406 mm (16 in.) Hg and at 25-mm (1-in.) Hg intervals until three consecutive determinations provide the same flow rate. Calculate the critical flow rate for the orifice in ml/min at standard conditions. Record the vacuum necessary to achieve critical flow.

6. Nomenclature

A_L = area under the response curve of the liquid sample, area count.

A_S = area under the response curve of the calibration gas, area count.

C_S = actual concentration of system calibration gas, ppm propane.

$K = 1.830 \times 10^{-9}$ g/(ml-ppm).

L = total VOC content of liquid input, kg.

M_L = mass of liquid sample delivered to the sample vessel, g.

q = flow rate through critical orifice, ml/min.

RF = liquid analysis system response factor, g/area count.

T_S = total gas injection time for system calibration gas during integrator calibration, min.

V_{Fj} = final VOC fraction of VOC containing liquid j.

V_{Ij} = initial VOC fraction of VOC containing liquid j.

V_{Aj} = VOC fraction of VOC containing liquid j added during the run.

V = VOC fraction of liquid sample.

W_{Fj} = weight of VOC containing liquid j remaining at end of the run, kg.

W_{Ij} = weight of VOC containing liquid j at beginning of the run, kg.

W_{Aj} = weight of VOC containing liquid j added during the run, kg.

7. Calculations

7.1 *Total VOC content of the input VOC containing liquid.*

$$L = \sum_{j=1}^{n} V_{Ij} W_{Ij} - \sum_{j=1}^{n} V_{Fj} W_{Fj} + \sum_{j=1}^{n} V_{Aj} W_{Aj} \qquad \text{Eq. 1}$$

7.2 *Liquid sample analysis system response factor for systems using intergrators, grams/area counts.*

$$RF = \frac{C_S q T_S K}{A_S} \qquad \text{Eq. 2}$$

7.3 VOC content of the liquid sample.

$$V = \frac{A_L RF}{M_L} \qquad \text{Eq. 3}$$

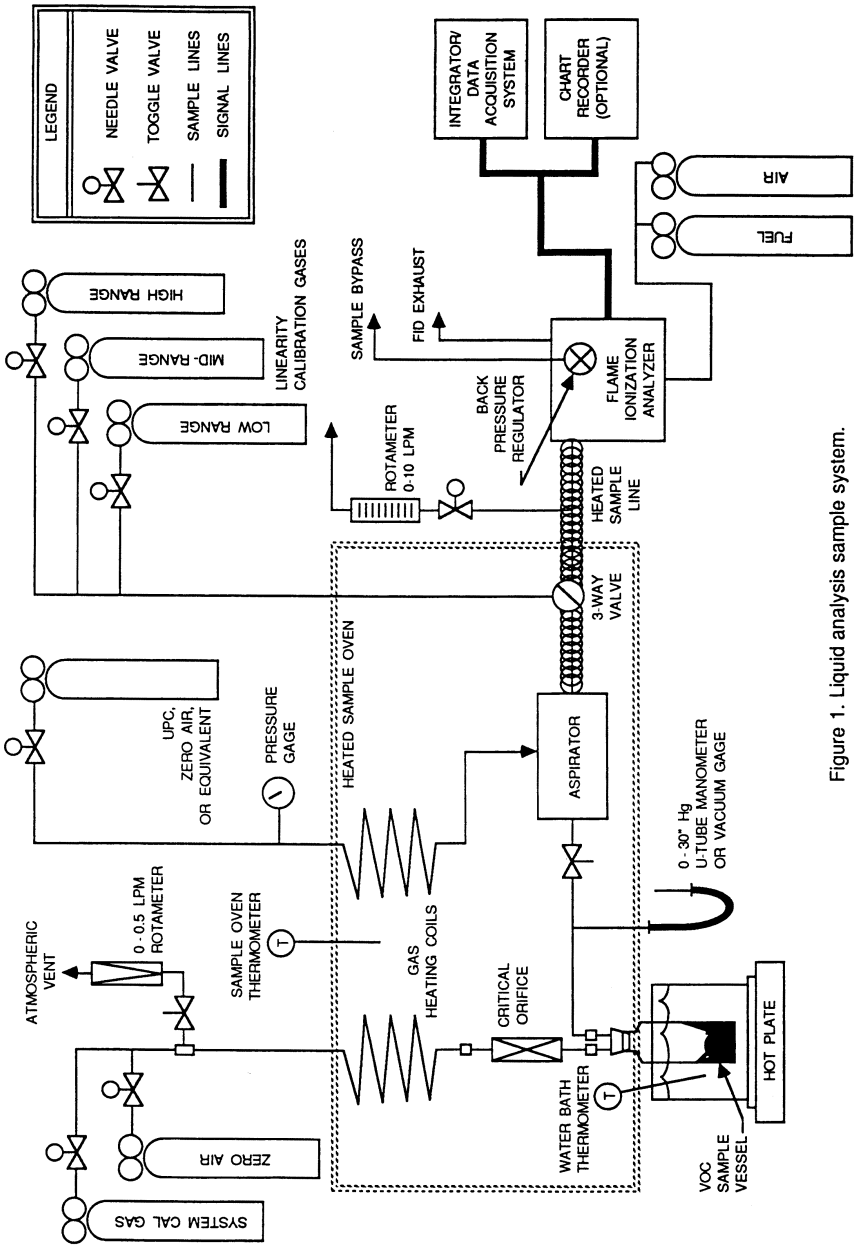

Figure 1. Liquid analysis sample system.

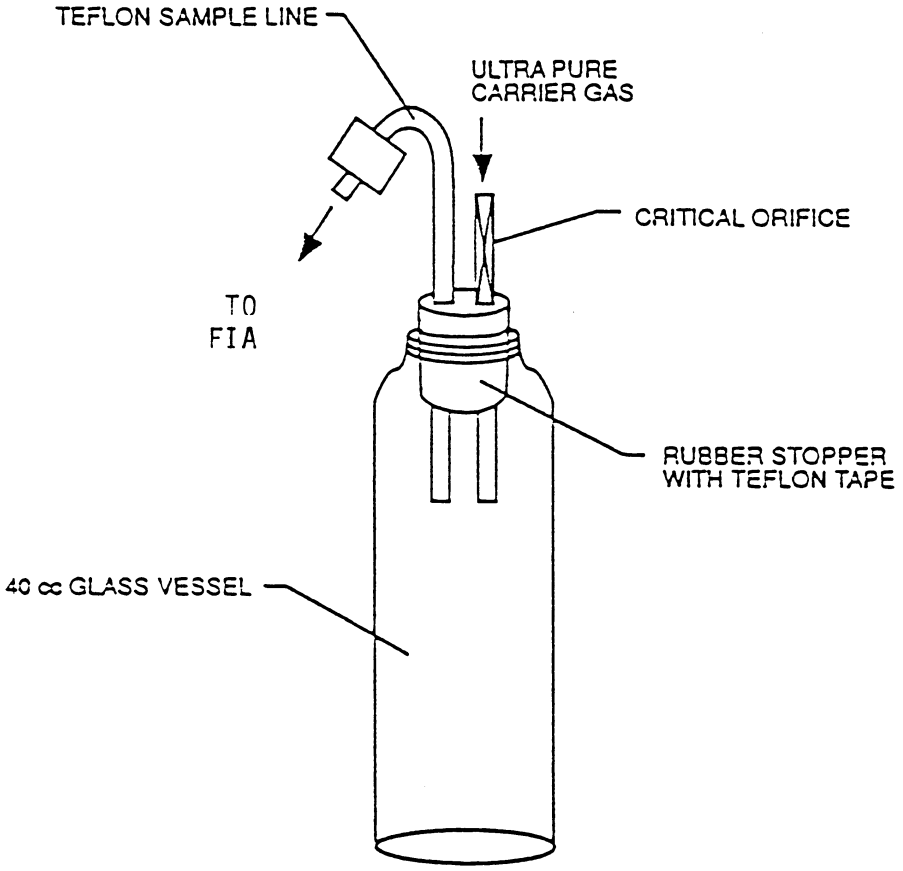

Figure 2. VOC sampling vessel.

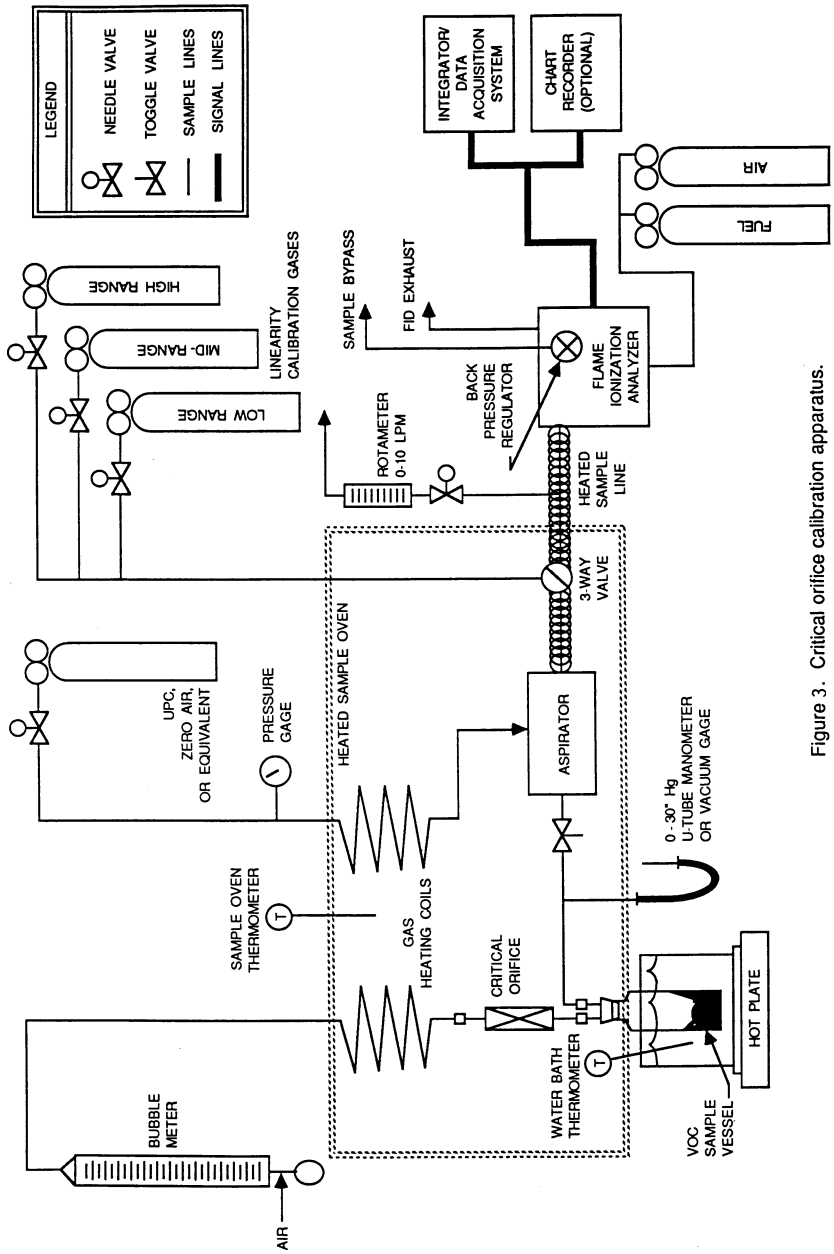

Figure 3. Critical orifice calibration apparatus.

Procedure T—Criteria for and Verification of a Permanent or Temporary Total Enclosure

1. Introduction

1.1 *Applicability*. This procedure is used to determine whether a permanent or temporary enclosure meets the criteria of a total enclosure.

1.2 *Principle*. An enclosure is evaluated against a set of criteria. If the criteria are met and if all the exhaust gases are ducted to a control device, then the volatile organic compounds (VOC) capture efficiency (CE) is assumed to be 100 percent and CE need not be measured. However, if part of the exhaust gas stream is not ducted to a control device, CE must be determined.

2. DEFINITIONS

2.1 *Natural Draft Opening (NDO)*—Any permanent opening in the enclosure that remains open during operation of the facility and is not connected to a duct in which a fan is installed.

2.2 *Permanent Total Enclosure (PTE)*—A permanently installed enclosure that completely surrounds a source of emissions such that all VOC emissions are captured and contained for discharge through a control device.

2.3 *Temporary Total Enclosure (TTE)*—A temporarily installed enclosure that completely surrounds a source of emissions such that all VOC emissions are captured and contained for discharge through ducts that allow for the accurate measurement of VOC rates.

3. CRITERIA OF A TEMPORARY TOTAL ENCLOSURE

3.1 Any NDO shall be at least 4 equivalent opening diameters from each VOC emitting point.

3.2 Any exhaust point from the enclosure shall be at least 4 equivalent duct or hood diameters from each NDO.

3.3 The total area of all NDO's shall not exceed 5 percent of the surface area of the enclosure's four walls, floor, and ceiling.

3.4 The average facial velocity (FV) of air through all NDO's shall be at least 3,600 m/hr (200 fpm). The direction of air through all NDO's shall be into the enclosure.

3.5 All access doors and windows whose areas are not included in section 3.3 and are not included in the calculation in section 3.4 shall be closed during routine operation of the process.

4. CRITERIA OF A PERMANENT TOTAL ENCLOSURE

4.1 Same as sections 3.1 and 3.3–3.5.

4.2 All VOC emissions must be captured and contained for discharge through a control device.

5. PROCEDURE

5.1 Determine the equivalent diameters of the NDO's and determine the distances from each VOC emitting point to all NDO's. Determine the equivalent diameter of each exhaust duct or hood and its distance to all NDO's. Calculate the distances in terms of equivalent diameters. The number of equivalent diameters shall be at least 4.

5.2 Measure the total area (A_t) of the enclosure and the total area (A_N) of all NDO's of the enclosure. Calculate the NDO to enclosure area ratio (NEAR) as follows:

$$NEAR = A_N/A_t$$

The NEAR must be ≤0.05.

5.3 Measure the volumetric flow rate, corrected to standard conditions, of each gas stream exiting the enclosure through an exhaust duct or hood using EPA Method 2. In some cases (*e.g.*, when the building is the enclosure), it may be necessary to measure the volumetric flow rate, corrected to standard conditions, of each gas stream entering the enclosure through a forced makeup air duct using Method 2. Calculate FV using the following equation:

$$FV=[Q_O - Q_I]/A_N$$

Where:

Q_O = the sum of the volumetric flow from all gas streams exiting the enclosure through an exhaust duct or hood.

Q_I = the sum of the volumetric flow from all gas streams into the enclosure through a forced makeup air duct; zero, if there is no forced makeup air into the enclosure.

A_N = total area of all NDO's in enclosure.

The FV shall be at least 3,600 m/hr (200 fpm).

5.4 Verify that the direction of air flow through all NDO's is inward. Use streamers, smoke tubes, tracer gases, etc. Strips of plastic wrapping film have been found to be effective. Monitor the direction of air flow at intervals of at least 10 minutes for at least 1 hour.

6. QUALITY ASSURANCE

6.1 The success of this protocol lies in designing the TTE to simulate the conditions that exist without the TTE, i.e., the effect of the TTE on the normal flow patterns around the affected facility or the amount of fugitive VOC emissions should be minimal. The TTE must enclose the application stations, coating reservoirs, and all areas from the application station to the oven. The oven does not have to be enclosed if it is under negative pressure. The NDO's of the temporary enclosure and a fugitive exhaust fan must be properly sized and placed.

6.2 Estimate the ventilation rate of the TTE that best simulates the conditions that exist without the TTE, i.e., the effect of the TTE on the normal flow patterns around the affected facility or the amount of fugitive

VOC emissions should be minimal. Figure 1 may be used as an aid. Measure the concentration (C_G) and flow rate (Q_G) of the captured gas stream, specify a safe concentration (C_F) for the fugitive gas stream, estimate the CE, and then use the plot in Figure 1 to determine the volumetric flowrate of the fugitive gas stream (Q_F). A fugitive VOC emission exhaust fan that has a variable flow control is desirable.

6.2.1 Monitor the concentration of VOC into the capture device without the TTE. To minimize the effect of temporal variation on the captured emissions, the baseline measurement should be made over as long a time period as practical. However, the process conditions must be the same for the measurement in section 6.2.3 as they are for this baseline measurement. This may require short measuring times for this quality control check before and after the construction of the TTE.

6.2.2 After the TTE is constructed, monitor the VOC concentration inside the TTE. This concentration shall continue to increase and must not exceed the safe level according to OSHA requirements for permissible exposure limits. An increase in VOC concentration indicates poor TTE design or poor capture efficiency.

6.2.3 Monitor the concentration of VOC into the capture device with the TTE. To limit the effect of the TTE on the process, the VOC concentration with and without the TTE must be within ±10 percent. If the measurements do not agree, adjust the ventilation rate from the TTE until they agree within 10 percent.

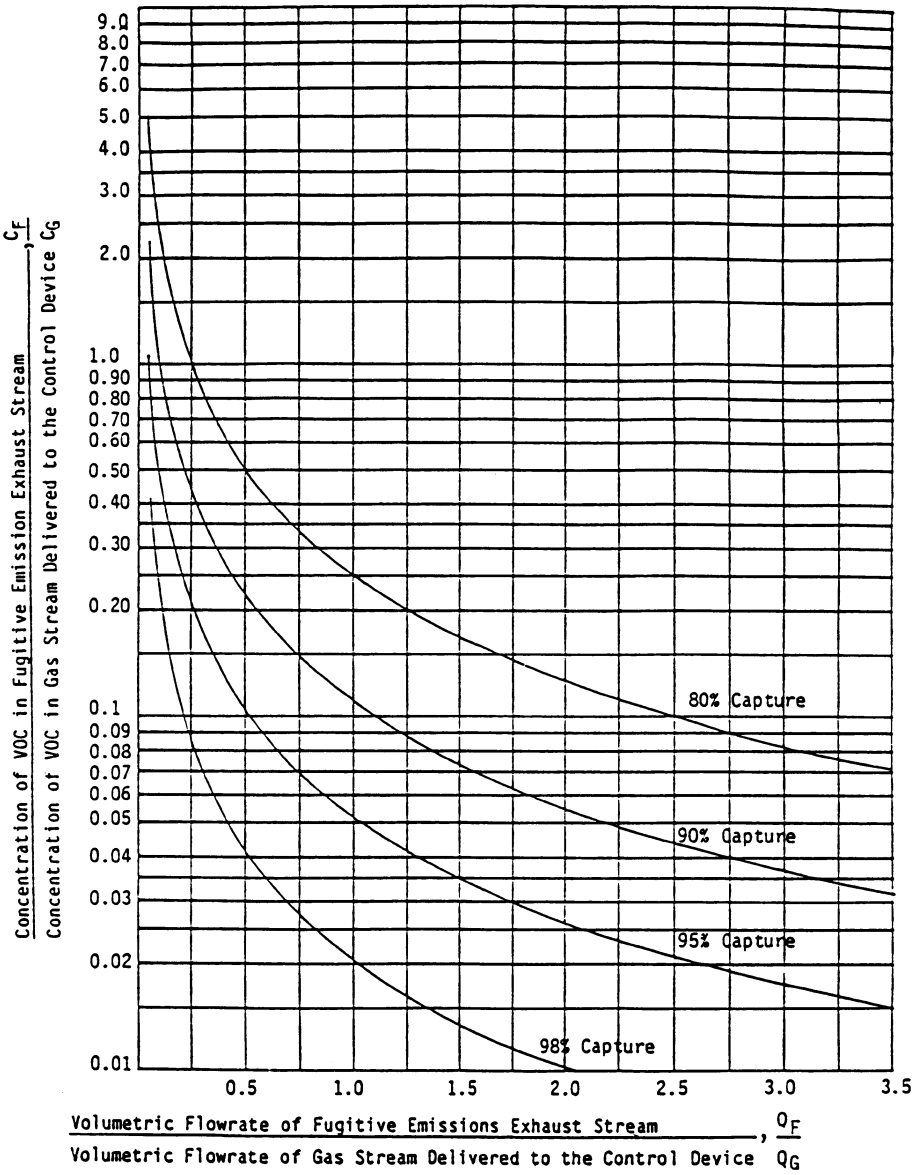

Figure 1. The Crumpler Chart

[55 FR 26856, June 29, 1990; 55 FR 31981, Aug. 6, 1990; 55 FR 39774, 39775, Sept. 28, 1990, as amended at 56 FR 24723, May 31, 1991; 56 FR 33712, July 23, 1991; 57 FR 3946, Feb. 3, 1992; 57 FR 7550, Mar. 3, 1992; 57 FR 27936, June 23, 1992; 58 FR 31653, June 4, 1993; 58 FR 34908, June 30, 1993; 59 FR 14112, Mar. 25, 1994; 59 FR 46569, Sept. 9, 1994; 60 FR 41, Jan. 3, 1995; 60 FR 13045, Mar. 10, 1995; 60 FR 14900, Mar. 21, 1995; 60 FR 43387, 43393, 43395, Aug. 21, 1995; 61 FR 54559, Oct. 21, 1996]

§ 52.742 Incorporation by reference.

The materials listed below are incorporated by reference in the corresponding sections noted. The incorporation by reference was approved by the Director of the Office of Federal Register in accordance with 5 U.S.C. 552(a) and 1 CFR part 51. These materials are incorporated as they exist on the date of approval, and a notice of any change in these materials will be published in the FEDERAL REGISTER. The materials are available from the sources listed below.

(a) The following material is available for purchase from the American Society for Testing and Materials (ASTM), 1916 Race Street, Philadelphia, PA 19103.

(1) ASTM D1475–85, Standard Test Method for Density of Paint, Varnish, Lacquer, and Related Products, for § 52.741(a)(4)(i)(B)(*3*)(*i*).

(2) ASTM D2369–87, Standard Test Method for Volatile Content of Coatings, for § 52.741(a)(4)(i)(B)(*3*)(*ii*).

(3) ASTM D3792–86, Standard Test Method for Water Content of Water-Reducible Paints by Direct Injection into a Gas Chromatograph, for § 52.741(a)(4)(i)(B)(*3*)(*iii*).

(4) ASTM D4017–81(Reapproved 1987), Standard Test Method for Water in Paints and Paint Materials by Karl Fischer Method, for § 52.741(a)(4)(i)(B)(*3*)(*iv*).

(5) ASTM D4457–85, Standard Test Method for Determination of Dichloromethane and 1,1,1-Trichloroethane in Paints and Coatings by Direct Injection into a Gas Chromatograph, for § 52.741(a)(4)(i)(B)(*3*)(*v*).

(6) ASTM D2697–86, Standard Test Method for Volume Nonvolatile Matter in Clear or Pigmented Coatings, for § 52.741(a)(4)(i)(B)(*3*)(*vi*).

(7) ASTM D3980–87, Standard Practice for Interlaboratory Testing of Paint and Related Materials, for § 52.741(a)(4)(i)(B)(*3*)(*vi*).

(8) ASTM E180–85, Standard Practice for Determining the Precision of ASTM Methods for Analysis and Testing of Industrial Chemicals, for § 52.741(a)(4)(i)(B)(*3*)(*viii*).

(9) ASTM D2372–85, Standard Method of Separation of Vehicle from Solvent-Reducible Paints, for § 52.741(a)(4)(i)(B)(*3*)(*ix*).

(10) ASTM D2879–86, Standard Test Method for Vapor Pressure-Temperature Relationship and Initial Decomposition Temperature of Liquids by Isoteniscope, for § 52.741(a)(3), (a)(8)(ii), (a)(9)(iii), and (a)(10)(iii).

(11) ASTM D323–82, Standard Test Method for Vapor Pressure of Petroleum Products (Reid Method), for § 52.741(a)(3).

(12) ASTM D86–82, Standard Method for Distillation of Petroleum Products, for § 52.741(a)(3).

(13) ASTM D3925–81(Reapproved 1985), Standard Practice for Sampling Liquid Paints and Related Pigment Coatings, for § 52.741(a)(4)(i)(A)(*1*).

(14) ASTM E300–86, Standard Practice for Sampling Industrial Chemicals, for § 52.741(a)(4)(i)(A)(*2*).

(b) The Evaporation Loss From External Floating-Roof Tanks, Publication 2517, second edition, February 1980, for § 52.741(a)(3) is available for purchase from the American Petroleum Institute, 2101 L Street, NW., Washington, DC 20037.

(c) The Standard Industrial Classification Manual, 1987, for § 52.741(a)(3) is available for purchase from the Superintendent of Documents, U.S. Government Printing Office, Washington, DC 20402.

(d) 35 Illinois Administrative Code 215, June 1989, subparts (B), (E) (sections 215.182, 215.183, and 215.184), (K) (sections 215.301 and 215.302), (Q) (excluding sections 215.432 and 215.436), (R) (excluding sections 215.447, 215.450, and 215.452), (S), (V), (X), (Y) (sections 215.582, 215.583, and 215.584), and (Z) of 35 Ill. Adm. Code 215 for § 52.741 (d)(1)–(d)(3); (e)(3), (e)(4); (h)(2); (i)(1), (i)(2); (j)(1)–(j)(3); (q)(1); (s)(1); (u)(1), (3); (v)(1); (w)(1); and (x)(1), (x)(3) is available from the United States Environmental Protection Agency, Air and Radiation Division, Region V, 230 S. Dearborn, Chicago, IL, 60604.

[55 FR 26909, June 29, 1990]

§ 52.743 Continuous monitoring.

(a) Alternative monitoring requirements established under Section 201.402 of Title 35, IAC must be either: Incorporated into a federally enforceable operating permit or construction permit or submitted to USEPA for approval as

a revision to the Illinois State Implementation Plan (SIP). Illinois shall set forth alternative emissions monitoring and reporting requirements to satisfy the intent of 40 CFR part 51, appendix P whenever Illinois exempts any source subject to Section 201.401 from installing continuous emission monitoring systems. Illinois may exempt a source if the source cannot install a continuous emission monitoring system because of physical plant limitations or extreme economic reasons, according to the criteria of Section 201.402.

(b) As codified at 40 CFR 52.737 (USEPA's approval of the Illinois operating permit program for the purpose of issuing federally enforceable construction and operating permits), USEPA reserves the right to deem an operating permit not federally enforceable. Such a determination will be made according to appropriate procedures including operating permit requirements promulgated at 54 FR 27274 (June 28, 1989) and will be based upon either; the permit, permit approval procedures or state or local permit requirements which do not conform with the operating permit program requirements or the requirements of USEPA's underlying regulations. Among other things, underlying requirements include 40 CFR 51.214 and part 51, appendix P and Illinois' approved SIP, 40 CFR part 52. Should USEPA deem an operating or construction permit containing alternative monitoring requirements not federally enforceable, the underlying continuous monitoring requirements at Section 201.401 of the State rule would be the Federal requirements contained in the SIP to which the source would be subject. This interpretation of the impact of an operating permit deemed not federally enforceable by USEPA on a source to which it was issued was acknowledged by the State in a March 3, 1993, letter from Bharat Mathur, Chief, Bureau of Air, Illinois Environmental Protection Agency, to Stephen Rothblatt, Chief, Regulation Development Branch, Region 5, USEPA.

[58 FR 17783, Apr. 6, 1993]

§ 52.744 Small business stationary source technical and environmental compliance assistance program.

The Illinois program submitted on November 12, 1992, as a requested revision to the Illinois State Implementation Plan satisfies the requirements of section 507 of the Clean Air Act Amendments of 1990.

[58 FR 45451, Aug. 30, 1993]

§§ 52.745–52.746 [Reserved]

§ 52.750 Original identification of plan section.

(a) This section identified the original ''Air Quality Implementation Plan for the State of Illinois'' and all revisions submitted by Illinois that were Federally-approved prior to June 1, 2017.

(b) The plan was officially submitted on January 31, 1972.

(c) The plan revision listed below were submitted on the dates specified.

(1) The role of the City of Chicago as a local agent was defined in a letter from the State Environmental Protection Agency on March 13, 1972.

(2) Copies of the Illinois Pollution Control Board Regulations, Chapter 2, Parts I, II and III were submitted May 4, 1972, by the Governor.

(3) A document describing the role of the Chicago Department of Environmental Control was submitted July 28, 1972, by the State Environmental Protection Agency.

(4) Copies of the revisions to the State air episode regulations were submitted on August 29, 1972, by the Governor.

(5) Compliance schedules submitted on March 13, 1973, by the Pollution Control Board.

(6) Compliance schedules submitted on April 3, 1973, by the Pollution Control Board.

(7) Transportation control plan submitted on April 17, 1973, by the Pollution Control Board.

(8) Compliance schedules submitted on May 3, 1973, by the Pollution Control Board.

(9) Compliance schedules submitted on June 15, 1973, by the Pollution Control Board.

(10) Compliance schedules submitted on August 7, 1973, by the Pollution Control Board.

(11) Information concerning the coal ban in the Chicago area was submitted on October 22, 1973, by Governor Walker.

(12) On July 22, 1976, the Director of the Illinois Environmental Protection Agency submitted revised emergency episode regulations.

(13) On November 29, 1977, the Director of the Illinois Environmental Protection Agency submitted grain handling and drying emission limitations as revisions to Rule 203.

(14) Revision consisting of an Illinois Pollution Control Board Order issued on July 20, 1978 to Commonwealth Edison Company, Christian County, Illinois and submitted on August 14, 1978 by the Illinois Environmental Protection Agency.

(15) Revision consisting of an Illinois Pollution Control Board Order issued to Shell Oil Company's Wood River refinery on December 14, 1978 by the Illinois Environmental Protection Agency.

(16) On April 4, 1979, the State submitted its draft nonattainment area plan for all areas designated nonattainment as of March 3, 1978 and as revised on October 5, 1978. This submittal contained a request for extensions of the statutory attainment deadline for CO and 03. The submittal also included a vehicle emission inspection and maintenance program and a new source review plan. Although the State submittal also included the following provisions, U.S. EPA is taking no action to include them in the federally approved SIP at this time: the portions of Rules 101, 103 and 105 relating to the provisions addressing malfunctions, general requirements of the Clean Air Act which are not Part D requirements, and the provisions covering open burning, mobile source emission standards, diesel locomotive emission standards, sulfur dioxide emissions for certain fuel combustion sources located outside major metropolitan areas, compliance dates for organic emission limitations, particulate emissions from low carbon waste incinerators, and adoption of Federal New Source Performance Standards. In addition, U.S. EPA is not rulemaking at this time on those portions of the following rules which contain specified changes made between the publication of the notice of proposed rulemaking and the final rulemaking action:

(i)–(iii) [Reserved]

(iv) The new materials in Section 4.11 of the Rules for Issuance of Permits to New or Modified Air Pollution Sources;

(v) The addition of a definition of ''reconstruction'' in Section 4.7 of the Rules for Issuance of Permits;

(vi) The procedure allowing external offsets contained in Section 10 of the Rules for Issuance of Permits.

(17) On August 29, 1979, the State submitted additional information and clarification for the nonattainment area plan in response to USEPA's July 2, 1979 notice of proposed rulemaking.

(18) On September 20, 1979, the State submitted a summary of public hearing comments on the plan.

(19) On October 30, 1979, the State submitted copies of Illinois Pollution Control Board final orders for control of VOC emissions from stationary sources (Rule 205), sources of fugitive particulate (Rule 203(f)), and particulate emissions from iron and steel sources (Rule 203(d)).

(20) On December 20, 1979, the State submitted a letter containing the dates that most of the regulatory and nonregulatory portions of the nonattainment area plans were finally adopted by the Illinois Pollution Control Board. Rule 205 containing RACT controls for stationary sources of VOC was effective in the State on July 18, 1979. Rule 203(f) governing fugitive dust emissions was effective in the State on September 18, 1979.

(21) On January 25, 1980, the State submitted a copy of finally enacted ''Rules for the Issuance of Permits to New or Modified Air Pollution Sources Affecting Nonattainment Areas.'' Sections 5.1(a)(2)(ii) and 5.1(a)(2)(iii) of these rules were reserved by the State. The effective date of these Rules was January 16, 1980.

(22) On March 21, 1979, the State of Illinois submitted to the USEPA revised regulations for control of sulfur dioxide emissions. On September 19, 1979, the

State submitted additional information on these revised regulations to the USEPA.

(23) On January 17, 1980 and on February 7, 1980 the State submitted further information and clarifications to Rule 204.

(24) On September 19, 1979, the State of Illinois submitted a revision to Rule 204(e)(1) for the Commonwealth Edison Company. The revision approves an emission limitation of 105,162 lbs SO_2/hour for the Kincaid Generating Station in Christian County, Illinois.

(25) On April 30, 1980, the State submitted revisions to the transportation control plan for northeast Illinois (Chicago).

(26) On December 20, 1979, the State of Illinois submitted a revision to provide for modification of the existing air quality surveillance network.

(27) On January 8, 1980, the State submitted an Opinion and Final Order of the Pollution Control Board (dated November 19, 1979) which deletes Rule 206(d) of Chapter 2 from the Illinois Air Pollution Control Regulations.

(28) On September 18, 1979, the State submitted a Final Order of the Pollution Control Board (dated April 12, 1979) which amended Rule 205(g)(1) of Chapter 2 of the Illinois Air Pollution Control Regulations.

(29) On July 21, 1981, the State submitted Volume 9 Lead, of the Illinois State Implementation Plan for Air Pollution Control for incorporation in the Illinois State Implementation Plan. This plan covers all areas in Illinois except for Granite City in the St. Louis Interstate AQCR.

(30) On July 29, 1980, the State submitted a May 29, 1980, Opinion and Order of the Illinois Pollution Control Board granting a variance from the requirements Rule 203(d)(8)(B) of Chapter 2 of the Air Pollution Control Regulations to Continental Grain Company's grain elevator located in Crossville, White County, Illinois. This variance expired July 1, 1980.

(31) On April 4, 1980, the State submitted a November 29, 1979, Opinion and Order of the Illinois Pollution Control Board (IPCB) and Supplementary IPCB Orders dated January 24, 1980, and February 7, 1980. These Orders grant 13 Caterpillar Tractor Company boilers a variance from the requirements of IPCB (A), Rule 203(g)(1)(C)(i) and/or Rule 203(g)(1)(D) which regulate particulate emissions from new and existing sources. No action is taken at this time on variance provisions for Mapleton facility boilers #2, 3, 4, and 5. This variance expired on October 8, 1981.

(32) On August 31, 1981, the State of Illinois submitted a revision to the Illinois State Implementation Plan in the form of a July 9, 1981, Order of the Illinois Pollution Control Board (R–77–15). This Order creates Rule 204(c)(1)(E) which establishes sulfur dioxide (SO_2) emission limitations of 5.5 lbs/SO/MMBTU for solid fuel combustion sources having actual heat input not greater than 250 million BTU's per hour owned or operated by Bemis Company, Inc., Celotex Corporation or Sherex Corporation. On November 17, 1981, the State submitted additional information in support of this revision.

(33) On August 20, 1980, and March 20, 1981, the State submitted additional information on the transportation control plans for the Northeast Illinois (Chicago) Area.

(34) On October 15, 1980, the State submitted additional information on the transportation control plans for the Peoria Metropolitan Area.

(35) On April 1, 1981, the State submitted additional information on the transportation control plans for the St. Louis Metropolitan (Illinois) Area.

(36) On December 10, 1980, the State submitted a July 24, 1980, Opinion and Order of the Illinois Pollution Control Board and a September 18, 1980, Order of the Board granting Bunge Corporation's Cairo, Illinois soybean processing plant and grain elevator variance from Illinois Pollution Control Board's particulate emission standards under Rules 203(g)(1)(D) and 103(b)(1) of Chapter 2 of the Air Pollution Control Regulations through October 15, 1981.

(37) On July 17, 1980, the State submitted an April 3, 1980, Opinion and Order of the Illinois Pollution Control Board adopting a December 13, 1979, Proposed Opinion and Order of the Board which exempted certain small explosive waste incinerators from the requirements of Rule 203(e) Particulate Emission Standards and Limitations

for incinerators and Rule 206(b) Carbon Monoxide Emissions Standards and Limitations for incinerators.

(38) On May 10, 1982, the State submitted a February 4, 1982, Illinois Pollution Control Board Opinion and Order (PCB 81–184) granting a variance from the requirements of Rules 205(m)(1)(B) and 204(n)(1)(G) of Chapter 2 of the Air Pollution Control Regulations to the Lyon Metal Products, Incorporated, Montgomery, Illinois facility. This variance expires on May 31, 1985.

(39) On October 1, 1981, the State submitted a report in satisfaction of the Total Suspended Particulate Control Strategy approval condition in which the State agreed to conduct an analysis of the potential air quality impact from storage piles with uncontrolled emissions of less than 50 tons per year, to submit the results of any analysis to EPA, to submit any necessary regulations to the Illinois Pollution Control Board, and promulgate and submit any necessary regulations to EPA. This report concluded that no further regulations were needed.

(40) EPA Study Volatile Organic Compound Emissions from Solvent Cleaning Operations in the State of Illinois (EPA 905/4–80–008) was prepared to satisfy the Ozone Control Strategy approval condition in which the State agreed to conduct a study to demonstrate that the three pound per hour, 15 pound per day exemption for solvent metal cleaners contained in Rule 205(k) represents RACT, to submit the results of the study to EPA, to submit the necessary regulations to the Illinois Pollution Control Board and promulgate and submit any necessary regulations to EPA. The State reviewed this report and in a February 11, 1981, letter to EPA noted their agreement with the findings of the report and indicated that because there was no need for further regulations, this condition is satisfied.

(41) On December 7, 1981, the State submitted a October 8, 1981, Illinois Pollution Control Board Final Order (R79–11). This Final Order amends Rule 203(g)(1) by adding subsection (E).

(42) On January 4, 1983, the State submitted a revision to the Illinois State Implementation Plan in the form of an October 27, 1982, Illinois Pollution Control Board (IPCB) Opinion and Order (PCB 82–88). This Opinion and Order grants a variance from the requirements of Rule 203(a) of Chapter 2 of the Air Pollution Control Regulations to a proposed fluidized bed combustion boiler at B.F. Goodrich's Henry County, Illinois facility. This variance continues until October 1, 1987, or until the facility is no longer subject to Rule 206(a), whichever comes first.

(43) On July 29, 1982, the State submitted a revision to the Illinois State Implementation Plan in the form of a May 28, 1981, Illinois Pollution Control Board (IPCB) Final Opinion of the Board (R78–17). This Final Opinion deletes Rule 204(c)(1)(D) and the reference to it in Rule 204(h) from the IPCB Air Pollution Control Regulations.

(44) On March 17, 1983, the Illinois Environmental Protection Agency (IEPA) submitted a revision to its ozone SIP for Chrysler's Belvidere facility. The revision request contains an alternative compliance time schedule with interim emission limitations which is in the form of a variance for prime coating and prime surface coating operations. Final compliance is changed from December 31, 1982 to December 31, 1987.

(45) On August 19, 1983, the State of Illinois submitted a revision to the Illinois State Implementation Plan in the form of a July 26, 1983, Order of the Illinois Pollution Control Board (R82–12). This Order creates Rule 313 which establishes 1.5 micrograms per cubic meter, maximum arithmetic mean, averaged over a calendar quarter as the State's ambient air quality standard for lead. The Board also adopted, as part of Rule 313, a measurement method for determining compliance with the standard.

(46) On August 15, 1983, the Illinois Environmental Protection Agency submitted a May 19, 1983, Opinion and Order (PCB–82–147) of the Illinois Pollution Control Board (IPCB) granting Del Monte Corporation's Can Manufacturing Plant No. 115 located in Rochelle, Ogle County, Illinois, a variance from the IPCB volatile organic compound emission standards under Rule 205(n)(1)(B)(i) and Rule 205(n)(1)(B)(vi)

of Chapter 2: Air Pollution Regulations. The variance expires on December 31, 1984.

(47) On March 24, 1983, and May 3, 1983, the State submitted information that indicated that a February 21, 1980 (45 FR 11472), conditional approval of the incorporation of a revised Part D sulfur dioxide control strategy into the Illinois State Implementation Plan has been satisfied for Cincinnati, Pekin and Elm Grove Townships in Tazewell County and for Logan and Limestone Townships in Peoria County. This approval condition required that the SIP include a reanalysis of the Pekin, Illinois area; a submittal of the analysis results to USEPA; the proposal of any necessary regulations to the Illinois Pollution Control Board necessary to insure attainment and maintenance of the sulfur dioxide standard; and the promulgation of any necessary regulations. Any promulgated regulations must be submitted to USEPA.

(48)–(49) [Reserved]

(50) On May 3, 1983, the State requested that USEPA incorporate IPCB Rule 204 (f)(2) into the Illinois SIP. Rule 204(f)(2) was adopted by Illinois as part of a February 24, 1983, Order of the Board (R80–22). USEPA approves the incorporation of Rule 204(f)(2) as it pertains to Pekin Energy, a source in the Peoria major metropolitan area.

(51) On January 30, 1984, the State submitted Rule 204(f) as contained in a February 24, 1983, Order of the IPCB (R80–22) as it applies to sources in the Peoria Major Metropolitan area for incorporation in the SIP. USEPA approves the incorporation of Rule 204(f) into the SIP as it applies to all sources in Peoria and Tazewell Counties except Caterpillar Tractor Mapleton and East Peoria Plants. No action is taken on Rule 204(f) as it applies to the Chicago or St. Louis (Illinois—portion) Major Metropolitan Areas or on Rule 204(f) (1) and (2).

(52) [Reserved]

(53) On September 30, 1983, the State submitted a revision to the Illinois State Implementation Plan in the form of a lead plan to assure attainment and maintenance of the NAAQS in the Granite City area. The Illinois plan includes a discussion of air quality data measured since 1978, an emission inventory of three source categories capable of emitting lead, atmospheric modeling analyses and proposed necessary control strategies. On March 19, 1984, the State submitted five consent decrees entered by the State of Illinois with the Circuit Court for the Third Judicial Circuit of Madison County and filed March 16, 1984, for incorporation in the lead plan. These include *People of the State of Illinois* vs. *Taracorp, Inc.; People of the State of Illinois* vs. *St. Louis Lead Recyclers; People of the State of Illinois* vs. *First Granite City National Bank; People of the State of Illinois,* vs. *Stackorp Inc.;* and *People of the State of Illinois* vs. *B.V. and G.V. Transport Company*.

(54) [Reserved]

(55) On November 14, 1985, the State of Illinois submitted a negative declaration for natural gas/gasoline processing plants.

(i) *Incorporation by reference*. (A) Letter dated November 14, 1985, from Michael J. Hayes, Manager, Division of Air Pollution Control, Illinois Environmental Protection Agency.

(56) On June 19, 1984, the State submitted Illinois Environmental Protection Agency Rule 252 entitled, ''Rules for Governing Public Participation in the Air Pollution Permit Program for Major Source in Nonattainment Areas.''

(i) *Incorporation by reference*. (A) Illinois Environmental Protection Agency Rule 252 entitled, ''Rule for Governing Public Participation in the Air Pollution Permit Program for Major Sources in Nonattainment Areas,'' published on June 8, 1984.

(57)–(60) [Reserved]

(61) On March 15, 1984 and June 14, 1984 the Illinois Environmental Protection Agency submitted commitments for satisfying several outstanding conditions to the sulfur dioxide [52.724(a)(1)] State Implementation Plan.

(62) On January 16, 1985, the Illinois Environmental Protection Agency submitted a variance from Illinois Rule 206(a).

(i) *Incorporation by reference*. (A) June 14, 1984, Opinion and Order of the Illinois Pollution Control Board (IPCB), PCB 84–19. This is a variance from Illinois Rule 206(a) until June 14, 1987, for

CO emissions from a fluidized bed combustion boiler at Midwest Solvents Company's facility in Tazewell County, Illinois.

(63) On February 6, 1985, the Illinois Environmental Protection Agency (IEPA) submitted a site-specific revision to its total suspended particulates State Implementation Plan for Villa Grove's ''Dump and Boot Pit'' emissions in Champaign County, Illinois.

(i) *Incorporation by reference.* (A) Illinois Pollution Control Board, Opinion and Order of the Board, PCB 84–53, Villa Grove's ''Dump and Boot Pit'' site-specific TSP revision. This revision extends the compliance date for control requirements on these emissions until September 1, 1987, and was adopted on July 14, 1984.

(64) On May 13, 1985, the Illinois Environmental Protection Agency (IEPA) submitted a variance from Illinois Rule 202(b) for a Brule pathological waste incinerator (BPWI) at NPWC's facility located at the Great Lakes Naval Base, Great Lakes, Shields Township, Illinois, as a revision to its TSP SIP. Shields Township is an attainment area for both the primary and secondary national ambient air quality standards (NAAQS) for TSP.

(i) *Incorporation by reference.* (A) Opinion and Order of the Illinois Pollution Control Board 84–156 adopted on March 22, 1985.

(65) Submitted from the Illinois Environmental Protection Agency (IEPA) dated July 22, 1985, requesting an extended compliance schedule for Precision Coatings Incorporated (PCI) coating Machine Number 2.

(i) *Incorporation by reference.* (A) Illinois Pollution Control Board Opinion and Order of the Board, PCB 84–117, which was adopted on February 20, 1985, and a modification to PCB 84–117 which was adopted on April 14, 1985.

(66) On March 27, 1985, the Illinois Environmental Protection Agency (IEPA) submitted a site-specific revision to its Carbon Monoxide State Implementation Plan for Anderson Clayton Foods, Inc. (ACF), a variance from 35 Illinois Administrative Code (IAC) 216.121 which governs Carbon Monoxide emissions from the Fluidized Bed Combuster retrofitted boiler at ACF's Jacksonville, Illinois facility. IAC 216.121 was incorporated in the Illinois SIP on May 31, 1972 (37 FR 10862), as Illinois Pollution Control Board Rule 206(a).

(i) *Incorporation by reference.* (A) Illinois Pollution Control Board Opinion and Order of the Board, PCB 84–147, which was adopted on January 24, 1985.

(67) On April 18, 1983, the State of Illinois submitted a 0.60 lb TSP/MMBTU emission limit for the City of Rochelle Municipal Steam Power Plant. On May 24, 1985, it submitted a revised modeling analysis.

(i) *Incorporation by reference.* Illinois Pollution Control Board Order (R78–15), Rule 203(g)(1)(C)(iii) which is dated February 24, 1983.

(68) On May 8, 1985, the Illinois Environmental Protection Agency submitted a variance until December 31, 1987, from Illinois Rule 205(n)(1)(b)(v) and Rule 205(n)(1)(b)(vi), for American Can Corporation's Hoopeston, Illinois facility in the form of a January 24, 1985, Opinion and Order of the Illinois Pollution Control Board (PCB 84–106).

(i) *Incorporation by reference.* (A) A January 24, 1985, Opinion and Order of the Illinois Pollution Control Board (ICPB), PCB 84–106. This is a variance until December 31, 1987, for the coating reformulation programs at American Can Corporation's Hoopeston facility located in Hoopeston, Illinois.

(69) On January 28, 1983, the Illinois Environmental Protection Agency submitted a December 30, 1982, Illinois Pollution Control Board Order (R80–5). Illinois Pollution Control Board Rules 205(l) (4) through (10), 205(t) and 205(u) are approved.

(i) *Incorporation by reference.* (A) Ilinois Pollution Control Board Rules 205(l)(4) through (10), 205(t) and 205(u) as contained in December 30, 1982, Illinois Pollution Control Board Order R80–5.

(ii) *Additional material.* None.

(70) On February 13, 1986, the Illinois Environmental Protection Agency (IEPA) submitted a revision to its ozone SIP for the Fedders-USA's facility located in Effingham, Effingham County, Illinois. It grants Fedders-USA a compliance date extension for control requirements from October 1, 1982, to April 1, 1986, and provides for a legally enforceable compliance program.

(i) *Incorporation by reference.* (A) A January 9, 1986, Opinion and Order of the Illinois Pollution Control Board (IPCB), PCB 83–47.

(71) On October 20, 1983, the Illinois Environmental Protection Agency submitted a site-specific revision to Illinois' sulfur dioxide plan for Illinois Power Company's Baldwin Power Station. The revised SO_2 emission limitations are 101,966 lbs/hour, in the aggregate, and 6 lbs/MMBTU.

(i) *Incorporation by reference.* (A) Emission limits within Paragraph 1 of Illinois Pollution Control Board Final Order PCB 79–7, which was adopted September 8, 1983.

(72) [Reserved]

(73) On May 6, 1985, the Illinois Environmental Protection Agency, requested an extended compliance schedule for National Can Corporation's Rockford facility.

(i) *Incorporation by reference.* (A) Illinois Pollution Control Board, April 1, 1982, Opinion and Order of the Board, PCB 81–189 and a January 24, 1985, Opinion and Order PCB 84–108. These orders grant National Can Corporation (Rockford Plant) a variance from the existing VOC SIP requirements from December 31, 1982, until December 31, 1983, and from December 31, 1983, until December 31, 1985, respectively.

(74) On October 30, 1986, the Illinois Environmental Protection Agency submitted a September 25, 1986, Final Order of the Illinois Pollution Control Board R85–33 revises the State's coke oven pushing and charging rules and recodifies some related rules.

(i) *Incorporation by reference.* (A) Order of the Illinois Pollution Control Board R85–33, which was adopted September 25, 1986.

(75)–(77) [Reserved]

(78) On January 28, 1983, June 25, 1987, August 21, 1987, September 28, 1987, October 2, 1987, December 22, 1987, January 8, 1988, March 29, 1988, and May 2, 1988 the State submitted stationary source control measures for incorporation in the ozone plan.

(i) *Incorporation by reference.* (A) The following sections of title 35, Environmental Protection; subtitle B: Air Pollution; Chapter 1: Pollution Control Board of the Illinois Administrative Code, (June 1989): section 211.122 (definitions of bead-dipping; component; dry cleaning facility; external floating roof; gas service; green tire spraying; green tires; heavy liquid; liquid mounted seal; liquid service; pneumatic rubber tire manufacture; refinery unit, process unit, or unit; tread end cementing; undertread cementing; valves not externally regulated; vapor collection system; vapor mounted primary seal; volatile organic liquid; and volatile organic material) of subpart B (part 211); section 215.104 (definitions of continuous process; in vacuum service; material recovery section; open-ended valve; polystyrene plant; polystyrene resin; repaired; styrene devolatilizer unit; and styrene recovery unit) of subpart A (part 215); sections 215.124, 215.125, and 215.126 of subpart B (part 215); section 215.205 of subpart F (part 215); sections 215.240, 215.241, and 215.249 of subpart H (part 215); section 215.408 of subpart P (part 215); sections 215.420 through 215.431, 215.433, 215.434, 215.435, 215.437, and 215.438, all of subpart Q (part 215); section 215.453 of subpart R (part 215); sections 215.465 and 215.466 of subpart S (part 215); sections 215.520, 215.521, 215.525, 215.526, and 215.527 all of subpart V (part 215); sections 215.582, 215,583, and 215.584 of subpart Y (part 215); sections 215.607 through 215.613 of subpart Z (part 215); and sections 215.875, 215.877, 215.879, 215.881, 215.883, and 215.886 all of subpart BB (part 215) are approved.

(ii) *Additional material.* (79) On March 20, 1986, November 17, 1986, and July 1, 1987, Illinois submitted its vehicle inspection and maintenance plan for the Chicago and East St. Louis areas.

(i) *Incorporation by reference.* (A) Title 35: Environmental Protection, Subtitle B: Air Pollution, Chapter II: Environmental Protection Agency, Part 276, Procedures To Be Followed in the Performance of Annual Inspections of Motor Vehicle Exhaust Emissions, Adopted at 10 Illinois Register 13954, effective August 13, 1986.

(ii) *Additional material.* (A) ''Technical Procedures Memorandum—Enforcement'' between the Illinois Secretary of State and the Illinois Environmental Protection Agency, as submitted by Michael J. Hayes, Manager, Division of Air Pollution Control on July 1, 1987.

(80) [Reserved]

(81) On April 6, 1990, and May 4, 1990, Illinois submitted a regulation which reduced the maximum allowable volatility for gasoline sold in Illinois during July and August 1990 to 9.5 pounds per square inch.

(i) *Incorporation by reference.* (A) Title 35: Environmental protection, Subtitle B: Air pollution, Chapter I: Pollution control board, Part 215, Organic material emission standards and limitations, § 215.585, Gasoline volatility standards, Adopted at 14 Illinois register *6434,* effective April 11, 1990.

(82)–(83) [Reserved]

(84) On September 18, 1991, and November 18, 1991, the State submitted documents intended to satisfy federal requirements for an operating permit program which can issue federally enforceable operating permits.

(i) *Incorporation in reference.* (A) Public Act 87–555, an Act to amend the Environmental Protection Act by changing section 9.1, effective September 17, 1991. (Ch. 111 1/2, par. 1009.1) par. 1009.1(a), (b), (c), (d) and (f).

(85) On March 24, 1988, the State submitted rules for issuance of construction permits to new and modified air pollution sources located in or affecting nonattainment areas (New Source Review rules).

(i) *Incorporation by reference.* (A) Illinois Administrative Code, Title 35 Environmental Protection, Subtitle B: Air Pollution, Chapter 1: Pollution Control Board, Part 203: Major Stationary Sources.

(86) On February 8, 1991, the State submitted revisions to its sulfur dioxide measurement methodology.

(i) *Incorporation by reference.* (A) Title 35: Environmental Protection, Subtitle B: Air Pollution, Chapter 1: Pollution Control Board, Part 214 Sulfur Limitations, Subpart A: General Provisions, section 214.101 Measurement Methods. Adopted December 20, 1990, effective January 15, 1991.

(87) On March 13, 1985, the State submitted revisions to its sulfur dioxide limitations.

(i) *Incorporation by reference.* (A) Title 35: Environmental Protection, Subtitle B: Air Pollution, Chapter 1: Pollution Control Board, Part 214 Sulfur Limitations, Subpart C: Existing Solid Fuel Combustion Emission Sources, Section 214.141 Sources Located in Metropolitan Areas, through paragraph (a) only, effective March 28, 1983; Subpart F: Alternative Standards for Sources Inside Metropolitan Areas, Section 214.201 Alternative Standards for Sources in Metropolitan Areas and Section 214.202 Dispersion Enhancement Techniques, effective March 28, 1983.

(88) On June 9, 1986, the State submitted revisions to its sulfur dioxide limitations in the form of a April 24, 1986, opinion and order of the Illinois Pollution Board in proceeding R84–28.

(i) *Incorporation by reference.* (A) Title 35: Environmental Protection, Subtitle B: Air Pollution Chapter 1: Pollution Control Board Part 214 Sulfur Limitations, Subpart C: Existing Solid Fuel Combustion Emission Sources, § 214.141 Sources Located in Metropolitan Areas, paragraphs b), c) and d), and Subpart X: Utilities, § 214.560 Scope and § 214.561 E.D. Edwards Electric Generating Station effective May 20, 1986.

(89) On March 17, 1989, and August 28, 1990, the State of Illinois submitted a revision to the Illinois State Implementation Plan. The revision is contained in subpart J, § 201.281 and subpart L, §§ 201.401-.408 of part 210 of title 35 of the Illinois Administrative Code. This revision provides a legally enforceable procedure for continuously monitoring and recording emissions to determine the status of compliance of certain stationary source categories and complies with 40 CFR 51.214 and part 51, appendix P. The rules were adopted by the Illinois Pollution Control Board on December 15, 1988, published (13 Ill. Reg. 2066) and became effective February 3, 1989. The rules were corrected for an omission, published on November 15, 1989, (13 Ill Reg. 19444), and became effective December 5, 1989. In a November 18, 1991, letter from Bharat Mathur, then Manager, Division of Air Pollution Control, Illinois Environmental Protection Agency (IEPA) to Stephen Rothblatt, Chief, Regulation Development Branch, Region 5, USEPA, Illinois committed to notify USEPA of any pending construction or operating permit application during the 30 day public comment period which is part of Illinois' permit issuance process (Section 203.150). This

commitment is part of the administrative record of USEPA's approval of the Illinois' operating permit program for the purpose of issuing federally enforceable operating permits at 40 CFR 52.720 (c) (84) and 52.737 on December 17, 1992 (57 FR 59928). USEPA may deem a permit not federally enforceable if monitoring provisions do not comply with the requirements of 40 CFR 51.214, part 51, appendix P or § 51.165.

(i) *Incorporation by reference.* (A) Title 35: Environmental Protection; Subtitle B: Air Pollution; Chapter I: Pollution Control Board; Subchapter a: Permits and General Provisions; Part 201: Permits and General Provisions, Subpart J: Monitoring and Testing, Section 201.281; and Subpart L: Continuous Monitoring, Sections 201.401 through 201.408, adopted at Ill. Reg. 2066, effective February 3, 1989.

(90) On June 11, 1991, Illinois submitted regulations concerning the emission of volatile organic compounds from pharmaceutical manufacturing.

(i) *Incorporation by reference.* (A) Title 35 of the Illinois Administrative Code: Environmental Protection, Subtitle B: Air Pollution, Chapter 1: Pollution Control Board, Subchapter C: Emissions Standards and Limitations for Stationary Sources, Part 215: Organic Material Emission Standards and Limitations, Subpart T: Pharmaceutical Manufacturing, Subpart A: General Provisions: Amendments to sections 215.102 and 215.105 and Creation of section 215.108. Adopted at 15 ILLINOIS REGISTER 80 18, effective May 14, 1991.

(B) Title 35 of the Illinois Administrative Code: Environmental Protection, Subtitle B: Air Pollution, Chapter 1: Pollution Control Board, Subchapter C: Emissions Standards and Limitations for Stationary Sources, Part 211: Definitions and General Provisions, Subpart B: Definitions. Adopted at 15 ILLINOIS REGISTER 79 01, effective May 14, 1991.

(91) [Reserved]

(92) On June 4, 1992, the State submitted particulate matter regulations adopted as part of Pollution Control Board Proceeding R91–35. These regulations concern particulate matter ambient limits and episode regulations.

(i) *Incorporation by reference.* Illinois Administrative Code, Title 35: Environmental Protection, Subtitle B: Air Pollution, Chapter I: Pollution Control Board

(A) Part 212 Visible and Particulate Matter Emissions: Section 212.113 Incorporations by Reference; section 212.424 Fugitive Particulate Matter Control for the Portland Cement Manufacturing Plant and Associated Quarry Operations located in LaSalle County, South of the Illinois River; section 212.443 Coke Plants; section 212.445 Blast Furnace Cast Houses; adopted at 16 Illinois Register 8204, effective May 15, 1992.

(B) Part 243 Air Quality Standards: Section 243.108 Incorporations by Reference; section 243.120 PM_{-10}; section 243.121 Repealed; adopted at 16 Illinois Register 8185, effective May 15, 1992.

(C) Part 244 Episodes: Section 244.101 Definitions; section 244.106 Monitoring; section 244.107 Determination of Areas Affected; section 244.121 Local Agency Responsibilities; section 244.161 Advisory Alert and Emergency Levels; section 244.162 Criteria for Declaring and Advisory; section 244.163 Criteria for Declaring a Yellow Alert; section 244.166 Criteria for Terminating Advisory, Alert and Emergency; section 244.167 Episode Stage Notification; section 244.168 Contents of Episode Stage Notification; section 244.169 Actions During Episode Stages Adopted; section 244 appendix D; adopted at 16 Illinois Register 8191, effective May 15, 1992.

(93) On September 30, 1992, the State submitted rules regulating volatile organic compound emissions from gasoline dispensing facilities' motor vehicle fuel operations.

(i) *Incorporation by reference.* (A) Illinois Administrative Code, title 35 Environmental Protection, subtitle B: Air Pollution, chapter I: Pollution Control Board part 218: Organic Material Emission Standards and Limitations for the Chicago Area; subpart Y: Gasoline Distribution; § 218.583 Gasoline Dispensing Facilities—Storage Tank Filling Operations, amended at 16 Illinois Register 13864 effective August 24, 1992, and; § 218.586 Gasoline Dispensing Facilities—Motor Vehicle Fueling Operations, added at 16 Illinois Register 13864, effective August 24, 1992.

(B) [Reserved]

(ii) *Additional materials.* (A) Stage II Vapor Recovery SIP Program Description dated September 29, 1992.

(94) On July 30, 1986, the State submitted particulate boiler rules intended to replace rule 203(g)(1) which was vacated by the Courts. No action is taken on § 212.209 because the variance which it authorized has expired. On July 22, 1988, the State submitted opacity rules intended to replace rule 202(b) which had been vacated by the Courts. Also on July 22, 1988, the State submitted Illinois Pollution Control Board procedural rules for considering Air Adjusted Standard Procedures.

(i) *Incorporation by reference.* (A) Title 35: Environmental Protection, Illinois Administrative Code, Subtitle B: Air Pollution; Chapter 1: Pollution Control Board; part 212 Visible and Particulate Matter Emissions; subpart E: Particulate Matter Emission from Fuel Combustion Emission Sources; §§ 212.201, 212.202, 212.203 and 212.204. Amended or added at 10 Ill Reg. 12637, effective July 9, 1986.

(B) Title 35: Environmental Protection, Illinois Administrative Code, Subtitle B: Air Pollution; Chapter 1: Pollution Control Board; part 212 Visible and Particulate Matter Emissions; subpart B: Visible Emissions. Amended or added at 12 Ill. Reg 12492, effective July 13, 1988.

(C) Title 35: Environmental Protection, Illinois Administrative Code; Subtitle A: General Provisions; Chapter 1: Pollution Control Board; part 106: Hearings Pursuant to Specific Rules; subpart E: Air Adjusted Standards Procedures. Added at 12 Ill. Reg 12484, effective July 13, 1988.

(95) On October 16, 1991, and November 13, 1991, the State submitted particulate matter regulations adopted as part of Pollution Control Board Proceeding R91–6. These regulations concern particulate matter controls for LaSalle County, Illinois.

(i) *Incorporation by reference.* Illinois Administrative Code, Title 35: Environmental Protection, Subtitle B: Air Pollution, Chapter I: Pollution Control Board.

(A) The addition of definitions for ''Condensible PM–10'', ''PM–10'', ''Portland Cement Manufacturing Process Emission Source'', and the modification of the definition of ''Portland Cement Process'' to Part 211 Definitions and General Provisions: Section 211.122 Definitions; adopted at 15 Illinois Register 15673, effective October 14, 1991.

(B) Part 212 Visible and Particulate Matter Emissions: Section 212.110 Measurement Methods; the addition of an abbreviation for pounds per hour to Section 212.111 Abbreviations and Units; additions and deletions to Section 212.113 Incorporations by Reference including the addition and/or renumbering of paragraphs (a), (b), (c), (d), (e), and (h) and the deletion of paragraphs earlier numbered as (a) and (f); Section 212.423 Emission Limits for Portland Cement the Manufacturing Plant Located in LaSalle County, South of the Illinois River; adopted at 15 Illinois Register 15708, effective October 4, 1991.

(96) On November 12, 1992, the State of Illinois submitted a Small Business Stationary Source Technical and Environmental Assistance Program for incorporation in the Illinois State Implementation Plan as required by section 507 of the Clean Air Act Amendments of 1990. Included in the State's submittal were a program description, newly adopted enabling legislation including new subsection 20 of section 39.5 of the Environmental Protection Act, Public Act 87–1213, and new subsection 46.13(a) of the Civil Administrative Code, Public Act 87–1177, and a May 4, 1992, State of Illinois, Illinois Department of Commerce and Community Affairs (DCCA), Illinois Environmental Protection Agency (IEPA) Interagency Agreement defining the responsibilities of DCCA and IEPA in developing and implementing the Small Business Stationary Source Technical and Environmental Compliance Assistance Program (Program).

(i) *Incorporation by reference.* (A) Subsection 20 of section 39.5 of the Environmental Protection Act adopted as Public Act 87–1213 signed into law on September 26, 1992, and effective upon signature.

(B) Subsection 46.13(a) of the Civil Administrative Code adopted as Public Act 87–1177 signed into law on September 21, 1992, and effective upon signature.

(ii) *Other material.* (A) Program description.

(B) May 4, 1992, Interagency Agreement between DCCA and IEPA defining the responsibilities of each agency in developing and implementing the program.

(97) On October 12, 1992, and June 2, 1993, the State of Illinois submitted a requested revision to the Illinois State Implementation Plan (SIP) intended to satisfy the requirements of section 182(a)(3)(B) of the Clean Air Act as amended in 1990. Included were State rules establishing procedures for the annual reporting of emissions of volatile organic material (VOM) and oxides of nitrogen (NO_X) as well as other regulated air pollutants by stationary sources in ozone nonattainment areas. Also included was a June 2, 1993, commitment letter from the Illinois Environmental Protection Agency (IEPA) to fulfill the reporting requirements of the United States Environmental Protection Agency by performing the following tasks:

(i) Update the AIRS Facility Subsystem using the annual emissions report data. The 1992 data will be updated by December 31, 1993, and subsequent updates will be made by July 1st of each year.

(ii) Retain annual emissions reports for at least three (3) years.

(iii) Develop and submit Emissions Statement Status Reports (ESSR) on a quarterly basis each year until all applicable sources have submitted the required annual emissions reports. The report will show the total number of facilities from which emission statement data was requested, the number of facilities that met the provisions, and the number of facilities that failed to meet the provisions. Sources that are delinquent in submitting their emissions statements will be individually listed if they emit 500 tons per year or more of VOM or 2500 tons per year or more of NO_X. The report will also contain the emission data requested in Appendix F of the July 6, 1992, Draft Guidance on the Implementation of an Emission Statement Program.

(iv) All sources subject to the emission statement requirements must report, at a minimum, the information specified under subpart C of part 254 of chapter II of subtitle B of title 35 of the Illinois Administrative Code.

(A) Incorporation by reference. Illinois Administrative Code, Title 35: Environmental Protection, Subtitle B: Air Pollution, Chapter II: Environmental Protection Agency, Part 254: Annual Emissions Report, adopted at 17 Illinois Register 7782, effective May 14, 1993.

(B) *Other material.* June 2, 1993, commitment letter.

(98) On July 21, 1986, the State a submitted revision to its particulate matter regulations to incorporate an emission limit for continuous automatic stoking animal pathological waste incinerators.

(i) *Incorporation by reference.* (A) Title 35: Environmental Protection, Subtitle B: Air Pollution, Chapter 1: Pollution Control Board, Part 212 Visible and Particulate Matter Emissions, subpart D: Particulate Matter Emissions from Incinerators, section 212.185 Continuous Automatic Stoking Animal Pathological Waste Incinerators. Adopted December 18, 1986, added at 11 Ill. Reg. 1410, effective December 30, 1986.

(99) On January 4, 1989, the State submitted revisions to its sulfur dioxide rules.

(i) *Incorporation by reference.* (A) Title 35: Environmental Protection, Subtitle B: Air Pollution, Chapter 1: Pollution Control Board, Subchapter c: Emission Standards and Limitations for Stationary Sources, Part 214 Sulfur Limitations, Subpart A: General Provisions, section 214.102 Abbreviations and Units. Amended at 12 Ill. Reg. 20778, effective December 5, 1988.

(B) Title 35: Environmental Protection, Subtitle B: Air Pollution, Chapter 1: Pollution Control Board, Subchapter c: Emission Standards and Limitations for Stationary Sources, Part 214 Sulfur Limitations, Subpart A: General Provisions, section 214.104 Incorporations by Reference. Amended at 15 Ill. Reg. 1017, effective January 15, 1991.

(C) Title 35: Environmental Protection, Subtitle B: Air Pollution, Chapter 1: Pollution Control Board, Subchapter c: Emission Standards and Limitations for Stationary Sources, Part 214 Sulfur Limitations, Subpart O: Petroleum Refining, Petrochemical and Chemical

Manufacturing, section 214.382 Petroleum and Petrochemical Processes. Amended at 12 Ill. Reg. 20778, effective December 5, 1988.

(100) On October 21, 1993, the State submitted definitions codified as part of the Illinois Administrative Code for incorporation in the Illinois State Implementation Plan.

(i) *Incorporation by reference.* Illinois Administrative Code Title 35: Environmental Protection, Subtitle B: Air Pollution, Chapter I: Pollution Control Board, Subchapter c: Emission Standards and Limitations for Stationary Sources, Part 211 Definitions and General Provisions, Subpart A: General Provisions: Sections 211.101 and 211.102, Subpart B: Definitions, Sections 211.121, 211.130, 211.150, 211.170, 211.210, 211.230, 211.250, 211.290, 211.310, 211.330, 211.350, 211.370, 211.390, 211.410, 211.430, 211.450, 211.470, 211.490, 211.510, 211.530, 211.550, 211.570, 211.590, 211.610, 211.630, 211.650, 211.670, 211.690, 211.710, 211.730, 211.750, 211.770, 211.790, 211.810, 211.830, 211.850, 211.870, 211.890, 211.910, 211.930, 211.950, 211.970, 211.990, 211.1010, 211.1050, 211.1090, 211.1110, 211.1130, 211.1150, 211.1170, 211.1190, 211.1210, 211.1230, 211.1250, 211.1270, 211.1290, 211.1310, 211.1330, 211.1350, 211.1370, 211.1390, 211.1410, 211.1430, 211.1470, 211.1490, 211.1510, 211.1530, 211.1550, 211.1570, 211.1590, 211.1610, 211.1630, 211.1650, 211.1670, 211.1690, 211.1710, 211.1730, 211.1750, 211.1770, 211.1790, 211.1810, 211.1830, 211.1850, 211.1870, 211.1890, 211.1910, 211.1930, 211.1950, 211.1970, 211.1990, 211.2010, 211.2050, 211.2070, 211.2090, 211.2110, 211.2130, 211.2150, 211.2170, 211.2190, 211.2210, 211.2230, 211.2250, 211.2270, 211.2310, 211.2330, 211.2350, 211.2370, 211.2390, 211.2410, 211.2430, 211.2450, 211.2470, 211.2490, 211.2510, 211.2530, 211.2550, 211.2570, 211.2590, 211.2650, 211.2670, 211.2690, 211.2710, 211.2730, 211.2750, 211.2770, 211.2790, 211.2810, 211.2830, 211.2850, 211.2870, 211.2890, 211.2910, 211.2930, 211.2950, 211.2970, 211.2990, 211.3010, 211.3030, 211.3050, 211.3070, 211.3090, 211.3110, 211.3130, 211.3150, 211.3170, 211.3190, 211.3210, 211.3230, 211.3250, 211.3270, 211.3290, 211.3310, 211.3330, 211.3350, 211.3370, 211.3390, 211.3410, 211.3430, 211.3450, 211.3470, 211.3490, 211.3510, 211.3530, 211.3550, 211.3570, 211.3590, 211.3610, 211.3630, 211.3650, 211.3670, 211.3690, 211.3710, 211.3730, 211.3750, 211.3770, 211.3790, 211.3810, 211.3830, 211.3850, 211.3870, 211.3890, 211.3910, 211.3930, 211.3970, 211.3990, 211.4010, 211.4030, 211.4050, 211.4070, 211.4090, 211.4110, 211.4130, 211.4150, 211.4170, 211.4190, 211.4210, 211.4230, 211.4250, 211.4270, 211.4290, 211.4310, 211.4330, 211.4350, 211.4370, 211.4390, 211.4410, 211.4430, 211.4450, 211.4470, 211.4490, 211.4510, 211.4530, 211.4550, 211.4590, 211.4610, 211.4630, 211.4650, 211.4670, 211.4690, 211.4710, 211.4730, 211.4750, 211.4770, 211.4790, 211.4810, 211.4870, 211.4890, 211.4910, 211.4930, 211.4950, 211.4990, 211.5030, 211.5050, 211.5070, 211.5090, 211.5110, 211.5130, 211.5150, 211.5170, 211.5185, 211.5190, 211.5210, 211.5230, 211.5250, 211.5270, 211.5310, 211.5330, 211.5350, 211.5370, 211.5410, 211.5430, 211.5450, 211.5470, 211.5490, 211.5510, 211.5550, 211.5570, 211.5590, 211.5610, 211.5630, 211.5650, 211.5670, 211.5690, 211.5710, 211.5730, 211.5750, 211.5770, 211.5790, 211.5810, 211.5830, 211.5850, 211.5870, 211.5890, 211.5910, 211.5930, 211.5950, 211.5970, 211.5990, 211.6010, 211.6030, 211.6050, 211.6070, 211.6090, 211.6130, 211.6150, 211.6190, 211.6210, 211.6230, 211.6270, 211.6290, 211.6310, 211.6330, 211.6350, 211.6370, 211.6390, 211.6410, 211.6430, 211.6450, 211.6470, 211.6490, 211.6510, 211.6530, 211.6550, 211.6570, 211.6590, 211.6610, 211.6670, 211.6690, 211.6730, 211.6750, 211.6770, 211.6790, 211.6810, 211.6850, 211.6870, 211.6890, 211.6910, 211.6930, 211.6950, 211.6970, 211.6990, 211.7010, 211.7030, 211.7070, 211.7090, 211.7110, 211.7130, 211.7150, 211.7170, 211.7190, 211.7210, 211.7230, 211.7250, 211.7270, 211.7290, 211.7310, 211.7330, 211.7350.

These section were added at 17 Ill. Reg. 16504, effective September 27, 1993.

(101) On October 21, 1993, the state submitted volatile organic compound (VOC) control regulations for incorporation in the Illinois State Implementation for ozone.

(i) *Incorporation by reference.* (A) Illinois Administrative Code Title 35: Environmental Protection, Subtitle B: Air Pollution, Chapter I: Pollution Control Board, Subchapter c: Emissions Standards and Limitations for Stationary Sources, Part 218: Organic Material Emission Standards and Limitations for the Chicago Area Subparts

A, B, C, E, F, G, H, Q, R, S, T, V, W, X, Y, Z, AA, BB, and Section 218.

Appendix A, B, C, and D. These regulations were adopted at R91–7 at 15 Ill. Reg. 12231, effective August 16, 1991; amended in R91–23 at Ill. Reg. 13564, effective August 24, 1992; amended in R91–28 and R91–30 at 16 Ill. Reg. 13864, effective August 24, 1992; amended in R93–9 at 17 Ill. Reg. 16636, effective September 27, 1993. The specific adoption and effective dates of the rules incorporated by reference follow.

(*1*) Adopted at R91–7 at 15 Ill. Reg. 12231, effective August 16, 1991. Subpart A 218.108; Subpart C: 218.142; Subpart R: 218.442, 218.444, 218.448, 218.451; Subpart T: 218.484, 218.488; Subpart V: 218.526; Subpart X: 218.561, 218.563; Subpart Z: 218.607; Subpart AA: 218.625, 218.626 and 218.630.

(*2*) Amended in R93–9 at 17 Ill. Reg. 16636, effective September 27, 1993. Subpart A: 218.100, 218.101, 218.102, 218.103, 218.104, 218.105, 218.106, 218.107, 218.109, 218.110, 218.111, 218.112; Subpart B: 218.121, 218.122, 218.123, 218.124; Subpart C: 218.141, 218.143, 218.144; Subpart E: 218.181, 218.182, 218.183, 218.184, 218.186; Subpart F: 218.204, 218.205, 218.206, 218.207, 218.208, 218.209, 218.210, 218.211; Subpart G: 218.301, 218.302, 218.303, 218.304; Subpart H: 218.401, 218.402, 218.403, 218.404, 218.405; Subpart Q: 218.421, 218.422, 218.423, 218.424, 218.425, 218.426, 218.427, 218.428, 218.429; Subpart R: 218.441, 218.443, 218.445, 218.446, 218.447, 218.449, 218.450, 218.452; Subpart S: 218.461, 218.462, 218.463, 218.464; Subpart T: 218.480, 218.481, 218.482, 218.483, 218.485, 218.486, 218.487, 218.489; Subpart V: 218.525; Subpart W: 218.541; Subpart X: 218.562; Subpart Y: 218.581, 218.582, 218.583, 218.584, 218.585, 218.586; Subpart Z: 218.601, 218.602, 218.603, 218.608, 218.609, 218.610, 218.611; Subpart AA: 218.620, 218.621, 218.623, 218.624, 218.628, 218.636, 218.637; Subpart BB: 218.640, 218.642, 218.644, Section 218: Appendix A, Appendix B, Appendix C, Appendix D.

(*3*) Section 218.585 was repealed in 2013 and is removed without replacement; see paragraph (c)(201) of this section.

(B) Illinois Administrative Code Title 35: Environmental Protection, Subtitle B: Air Pollution, Chapter I: Pollution Control Board, Subchapter c: Emissions Standards and Limitations for Stationary Sources, Part 219: Organic Material Emission Standards and Limitations for Metro East Area Subparts A, B, C, E, F, G, H, Q, R, S, T, V, W, X, Y, Z, AA, BB and Section 219 Appendix A, B, C, and D. These regulations were adopted at R91–8 at Ill. Reg. 12491, effective August 16, 1991; amended in R91–24 at 16 Ill. Reg. 13597, effective August 24, 1992; amended in R91–30 at 16 Ill. Reg. 13833, effective August 24, 1992, emergency amendment in R93–12 at Ill. Reg. 8295, effective May 24, 1993, for a maximum of 150 days, amended in R93–9 at 17 Ill. Reg. 16918, effective September 27, 1993 and October 21, 1993. The specific adoption and effective dates of the rules incorporated by reference follow.

(*1*) Adopted at R91–8 at 15 Ill. Reg. 12491, effective August 16, 1991: Subpart A: 219.103, 219.108; Subpart C: 219.142; Subpart R: 219.442, 219.444, 219.448, 219.451; Subpart T: 219.484, 219.488; Subpart V: 219.526; Subpart X: 219.561, 219.563; Subpart Z: 219.607; Subpart AA: 219.625, 219.626, 219.630.

(*2*) Amended in R93–9 at 17 Ill. Reg. 16918, effective September 27, 1993:

Subpart A: 219.100, 219.101, 219.102, 219.104, 219.105, 219.106, 219.107, 219.109, 219.110, 219.111, 219.112;
Subpart B: 219.121, 219.122, 219.123, 219.124;
Subpart C: 219.141, 219.143, 219.144;
Subpart E: 219.181, 219.182, 219.183, 219.184, 219.186;
Subpart F: 219.204, 219.205, 219.206, 219.207, 219.208, 219.209, 219.210, 219.211;
Subpart G: 219.301, 219.302, 219.303, 219.304;
Subpart H: 219.401, 219.402, 219.403, 219.404, 219.405;
Subpart Q: 219.421, 219.422, 219.423, 219.424, 219.425, 219.426, 219.427, 219.428, 219.429;
Subpart R: 219.441, 219.443, 219.445, 219.446, 219.447, 219.449, 219.450, 219.452;
Subpart S: 219.461, 219.462, 219.463, 219.464;
Subpart T: 219.480, 219.481, 219.482, 219.483, 219.485, 219.486, 219.487, 219.489;
Subpart V: 219.525;
Subpart W: 219.541;
Subpart X: 219.562;
Subpart Y: 219.581, 219.582, 219.583, 219.584, 219.585, 219.586;
Subpart Z: 219.601, 219.602, 219.603, 219.608, 219.609, 219.610, 219.611;
Subpart AA: 219.620, 219.621, 219.623, 219.624, 219.628, 219.636, 219.637;
Subpart BB: 219.640, 219.642, 219.644;
Section 219: Appendix A, Appendix B, Appendix C, Appendix D.

(*3*) Section 219.585 was repealed in 2013 and is removed without replacement; see paragraph (c)(201) of this section.

(102) On October 21, 1993 and March 4, 1994, the State submitted volatile organic compound control regulations for incorporation in the Illinois State Implementation Plan for ozone.

(i) *Incorporation by reference.* (A) Title 35: Environmental Protection, Subtitle B: Air Pollution, Chapter I: Pollution Control Board, Subchapter c: Emission Standards and Limitations for Stationary Sources, Part 211: Definitions and General Provisions, Subpart B: Definitions, Sections 211.270, 211.1070, 211.2030, 211.2610, 211.3950, 211.4050, 211.4830, 211.4850, 211.4970, 211.5390, 211.5530, 211.6110, 211.6170, 211.6250, 211.6630, 211.6650, 211.6710, 211.6830, 211.7050. These sections were adopted on January 6, 1994, Amended at 18 Ill. Reg. 1253, and effective January 18, 1994.

(B) Illinois Administrative Code Title 35: Environmental Protection, Subtitle B: Air Pollution, Chapter I: Pollution Control Board, Subchapter c: Emissions Standards and Limitations for Stationary Sources, Part 218: Organic Material Emissions Standards and Limitations for the Chicago Area, Subpart PP: 218.927, 218.928; Subpart QQ: 218.947, 218.948; Subpart RR: 218.967, 218.968; Subpart TT: 218.987, 218.988; Subpart UU: 218.990. These sections were adopted on September 9, 1993, Amended at 17 Ill. Reg. 16636, effective September 27, 1993.

(C) Illinois Administrative Code Title 35: Environmental Protection, Subtitle B: Air Pollution, Chapter I: Pollution Control Board, Subchapter c: Emissions Standards and Limitations for Stationary Sources, Part 218: Organic Material Emissions Standards and Limitations for the Chicago Area, Subpart A: 218.106, 218.108, 218.112, 218.114; Subpart H: 218.402; Subpart Z: 218.602, 218.611; Subpart AA: 218.620, 218.623 (repealed); Subpart CC; Subpart DD; Subpart PP: 218.920, 218.926; Subpart QQ: 218.940, 218.946; Subpart RR: 218.960, 218.966; Subpart TT: 218.980, 218.986; Subpart UU: 218.991. These sections were adopted on January 6, 1994, Amended at 18 Ill. Reg. 1945, effective January 24, 1994.

(103) On February 11, 1993, Illinois submitted a site specific revision to its carbon monoxide State Implementation Plan for a General Motors Corporation iron foundry located adjacent to Interstate 74 at G Street in Vermilion County, Illinois.

(i) *Incorporation by reference.* (A) Illinois Administrative Code; Title 35 Environmental Protection; Subtitle B: Air Pollution; Chapter I: Pollution Control Board; Subchapter C: Emission Standards and Limitations for Stationary Sources; P 216: Carbon Monoxide Emissions; Subpart O: Primary and Fabricated Metal Products; Section 216.382 Exception, General Motors Ferris Foundry in Vermilion County. Added at 16 Illinois Register 18075, effective November 13, 1992.

(104) [Reserved]

(105) On February 7, 1994, the State submitted revisions intended to create a permit program for small sources. The purpose of these revisions is to lessen the permitting burden on small sources and the permitting authority by reducing the frequency and/or the requirement of operating permit renewal for sources emitting a total of less than 25 tons per year of regulated air pollutants. A permit obtained through these procedures is intended to continue as a legally binding State document until the source modifies its operations, withdraws its permit or becomes subject to a new applicable requirement. At that time, the State will determine whether the small source procedures continue to be appropriate and issue a revised small source permit or direct the source in following the correct permit procedures. Since small source permits are not subject to a public comment period or review by USEPA, they are not federally enforceable and cannot be used to limit sources' potential to emit and thereby exempt them from the requirements of the title v operating permit program.

(i) *Incorporation by reference.* Illinois Administrative Code, Title 35: Environmental Protection, Subtitle B: Air Pollution, Chapter I: Pollution Control Board.

(A) Subchapter a: Permits and General Provisions, Part 201: Permits and General Provisions.

(*1*) Subpart D: Permit Applications and Review Process, Section 201.162 Duration and Section 201.163 Joint Construction and Operating Permits. Amended at 17 Ill. Reg., effective December 7, 1993.

(*2*) Subpart E: Special Provisions for Operating Permits for Certain Smaller Sources, Section 201.180 Applicability, Section 201.181 Expiration and Renewal and Section 201.187 Requirement for a Revised Permit Added at 17 Ill. Reg., effective December 7, 1993.

(B) Subchapter C: Emission Standards and Limitations for Stationary Sources, Part 211: Definitions and General Provisions, Subpart B: Definitions, Section 211.5500 Regulated Air Pollutant. Adopted at 17 Ill. Reg., effective December 7, 1993.

(106) On November 23, 1994, the State submitted amended marine vessel loading rules which consisted of revised definitions, and revisions to the Ozone Control Plan for the Chicago and Metro-East St. Louis areas.

(i) *Incorporation by reference.* Illinois Administrative Code, Title 35: Environmental Protection, Subtitle B: Air Pollution, Chapter I: Pollution Control Board, Subchapter c: Emissions Standards and Limitations for Stationary Sources.

(A) Part 211: Definitions and General Provisions, Subpart B: Definitions, Sections 211.3480 Loading Event and 211.3660 Marine Vessel added at 18 Ill. Reg. 166769, effective October 25, 1994; Sections 211.3650 Marine Terminal, and 211.6970 Vapor Collection System, and Section 211.6990 Vapor Control System amended at 18 Ill. Reg. 16769, effective October 25, 1994.

(B) Part 218: Organic Material Emission Standards and Limitations for the Chicago Area, Subpart A; General Provisions, Sections 218.101 Savings Clause and 218.106 Compliance Dates amended at 18 Ill. Reg. 16392, effective October 25, 1994; Subpart GG: Marine Terminals, Sections 218.760 Applicability, 218.762 Control Requirements, 218.764 Compliance Certification, 218.766 Leaks, 218.768 Testing and Monitoring, and 218.770 Recordkeeping and Reporting added at 18 Ill. Reg. 16392, effective October 25, 1994; Appendix E: List of Affected Marine Terminals amended at 18 Ill. Reg. 16392, effective October 25, 1994.

(C) Part 219: Organic Material Emissions Standards and Limitations for the Metro-East Area, Subpart A; General Provisions, Sections 219.101 Savings Clause and 219.106 Compliance Dates amended at 18 Ill. Reg. 16415, effective October 25, 1994; Subpart GG: Marine Terminals, Sections 219.760 Applicability, 219.762 Control Requirements, 219.764 Compliance Certification, 219.766 Leaks, 219.768 Testing and Monitoring, and 219.770 Recordkeeping and Reporting added at 18 Ill. Reg. 16415, effective October 25, 1994.

(D) Part 219: Organic Material Emissions Standards and Limitations for the Metro-East Area, Appendix E: List of affected Marine Terminals amended at 20 Ill. Reg. 3848. Effective February 15, 1996.

(107) On October 25, 1994, Illinois submitted a regulation which requires gasoline dispensing operations in the Chicago and Metro-East St. Louis ozone nonattainment areas that have storage tanks of at least 575 gallons to install pressure/vacuum relief valves on storage tank vent pipes. Tanks installed before January 1, 1979, are exempt from the rule if they have a capacity of less than 2000 gallons, as are tanks that are equipped with floating roofs or equivalent control devices that have been approved by the State and USEPA.

(i) *Incorporation by reference.* Illinois Administrative Code Title 35: Environmental Protection, Subtitle B: Air Pollution, Chapter I: Pollution Control Board, Subchapter c: Emissions Standards and Limitations for Stationary Sources.

(A) Part 201 Permits and General Provisions, Section 201.302 Reports. Amended at 18 Ill. Reg. 15002. Effective September 21, 1994.

(B) Part 211 Definitions and General Provisions, Section 211.5060 Pressure/Vacuum Relief Valve. Added at 18 Ill. Reg. 14962. Effective September 21, 1994.

(C) Part 218 Organic Material Emission Standards and Limitations for Chicago Area, Section 218.583 Gasoline Dispensing Operations-Storage Tank Filling Operations. Amended at 18 Ill. Reg. 14973. Effective September 21, 1994.

(D) Part 219 Organic Material Emission Standards and Limitations for

Metro East Area, Section 219.583 Gasoline Dispensing Operations-Storage Tank Filling Operations. Amended at 18 Ill. Reg. 14987. Effective September 21, 1994.

(108) On January 25, 1994, the State submitted a revision to its ozone State Implementation Plan (SIP) for Quantum Chemical Corporation's facility located in Morris, Aux Sable Township, Grundy County, Illinois. It grants an adjusted standard from Parts 35 Illinois Administration Code (IAC) 218.966 and 218.986 as they apply to specific units or plants within this facility.

(i) *Incorporation by reference.* (A) Illinois Pollution Control Board Final Opinion and Order, AS 92–14, adopted on October 7, 1993, and effective on October 7, 1993.

(109) On October 25, 1994, Illinois submitted a regulation that reduces the maximum allowable volatility for gasoline sold in the Metro-East St. Louis ozone nonattainment area, which includes Madison, Monroe, and St. Clair Counties, to 7.2 pounds per square inch Reid Vapor Pressure (RVP) during the summer control period. On May 14, 1996, Illinois submitted an amendment to its RVP rule which changes the summer regulatory control period of the program. The summer control period for the Illinois RVP program is June 1 to September 15.

(i) *Incorporation by reference.* Illinois Administrative Code Title 35: Environmental Protection, Subtitle B: Air Pollution, Chapter I: Pollution Control Board, Subchapter c: Emissions Standards and Limitations for Stationary Sources, Part 219 Organic Material Emission Standards and Limitations for Metro East Area.

(A) Section 219.112 Incorporation by Reference. Amended at 18 Ill. Reg. 14987. Effective September 21, 1994.

(B) [Reserved]

(C) Section 219.585 Gasoline Volatility Standards. Amended at 20 Ill. Reg. 3848: Effective February 15, 1996.

(D) Section 219.585 was repealed in 2013 and is removed without replacement; see paragraph (c)(201) of this section.

(110) On September 26, 1994, the State of Illinois submitted a revision to its ozone State Implementation Plan for the J. M. Sweeney Company located in Cicero, Cook County, Illinois. It grants a compliance date extension from Stage II vapor control requirements (35 Ill. Adm. Code 218.586) from November 1, 1993, to March 31, 1995.

(i) *Incorporation by reference.* (A) Illinois Pollution Control Board Final Opinion and Order, PCB 93–257, adopted on September 1, 1994, and effective on September 1, 1994. Certification dated 9/23/94 of Acceptance by J. M. Sweeney.

(111) On July 29, 1994, Illinois submitted regulations which require adoption and implementation of particulate matter contingency measures for Illinois' four moderate particulate matter nonattainment areas. Sources in the nonattainment areas which emit at least 15 tons of particulate matter must submit two levels of contingency measures, which will then become Federally enforceable. Sources will be required to implement the contingency measures if an exceedance of the National Ambient Air Quality Standard for Particulate Matter is measured, or if the United States Environmental Protection Agency finds that an area has failed to attain the National Ambient Air Quality Standards.

(i) *Incorporation by reference.* Illinois Administrative Code Title 35: Environmental Protection, Subtitle B: Air Pollution, Chapter I: Pollution Control Board;

(A) Part 106 Hearings Pursuant to Specific Rules, Section 106.930—Applicability, Section 106.931—Petition for Review, Section 106.932—Response and Reply, Section 106.933—Notice and Hearing, Section 106.934—Opinion and Order. Amended at 18 Ill. Reg. 11579–11586. Effective July 11, 1994.

(B) Part 212 Visible and Particulate Matter Emissions, Section 212.700—Applicability, Section 212.701—Contingency Measure Plans, Submittal and Compliance Date, Section 212.702—Determination of Contributing Sources, Section 212.703—Contingency Measure Plan Elements, Section 212.704—Implementation, Section 212.705—Alternative Implementation. Added at 18 Ill. Reg. 11587–11606. Effective July 11, 1994.

(112) On March 28, 1995, the State of Illinois submitted a revision to its ozone State Implementation Plan for P & S, Incorporated's facility located in Wood Dale, Du Page County, Illinois. It

grants a compliance date extension from Stage II vapor control requirements (35 Ill. Adm. Code 218.586) from November 1, 1994 until April 1, 1996, or 60 days after notification to P & S, Incorporated that the roadway construction complicating the installation of Stage II equipment will be abandoned for any reason, whichever is sooner.

(i) *Incorporation by reference.* (A) Illinois Pollution Control Board Final Opinion and Order, PCB 94–299, adopted on February 16, 1995, and effective on February 16, 1995. Certification dated March 1, 1995 of Acceptance by P & S, Incorporated.

(113) On April 27, 1995, the Illinois Environmental Protection Agency requested a revision to the Illinois State Implementation Plan in the form of revisions to the State's New Source Review rules for sources in the Chicago and metropolitan East St. Louis ozone nonattainment areas and are intended to satisfy Federal requirements of the Clean Air Act as amended in 1990. The State's New Source Review provisions are codified at Title 35: Environmental Protection Subtitle B: Air Pollution, Chapter I: Pollution Control Board, Subchapter a: Permits and General Provisions. Part 203 Major Stationary Sources Construction and Modification is amended as follows:

(i) *Incorporation by reference.* (A) Title 35: Environmental Protection, Subpart A: General Provisions, Section 203.101 Definitions, Section 203.107 Allowable Emissions, Section 203.110 Available Growth Margin, Section 203.112 Building, Structure and Facility, Section 203.121 Emission Offset, Section 203.122 Emissions Unit, Section 203.123 federally Enforceable, Section 203.126 Lowest Achievable Emission Rate, Section 203.128 Potential to Emit, Section 203.145 Volatile Organic Material, Section 203.150 Public Participation. Effective April 30, 1993.

(B) Title 35: Environmental Protection, Subpart B: Major Stationary Sources in Nonattainment Areas, Section 203.201 Prohibition, Section 203.203 Construction Permit Requirement and Application, Section 203.206 Major Stationary Source, Section 203.207 Major Modification of a Source, Section 203.208 Net Emission Determination, Section 203.209 Significant Emissions Determination. Effective April 30, 1993.

(C) Title 35: Environmental Protection, Subpart C: Requirements for Major Stationary Sources in Nonattainment Areas, Section 203.301 Lowest Achievable Emission Rate, Section 203.302 Maintenance of Reasonable Further Progress and Emission Offsets, Section 203.303 Baseline and Emission Offsets Determination, Section 203.306 Analysis of Alternatives. Effective April 30, 1993.

(D) Title 35: Environmental Protection, Subpart H: Offsets for Emission Increases From Rocket Engines and Motor Firing, Section 203.801 Offsetting by Alternative or Innovative Means. Effective April 30, 1993. Published in the Illinois Register, Volume 17, Issue 20, May 14, 1993.

(114) On November 30, 1994, the State submitted an amended Synthetic Organic Chemical Manufacturing Industry Air Oxidation Process rule which consisted of extended applicability and tightened control measures to the Ozone Control Plan for the Chicago and Metro-East St. Louis areas.

(i) *Incorporation by reference.* Illinois Administrative Code, Title 35: Environmental Protection, Subtitle B: Air Pollution, Chapter I: Pollution Control Board, Subchapter c: Emissions Standards and Limitations for Stationary Sources.

(A) Part 218: Organic Material Emission Standards and Limitations for the Chicago Area, Subpart V; Air Oxidation Processes, Sections 218.520 Emission Limitations for Air Oxidation Processes, 218.522 Savings Clause, 218.523 Compliance, 218.524 Determination of Applicability, and 218.525 Emission Limitations for Air Oxidation Processes (Renumbered) at 18 Ill. Reg. 16972, effective November 15, 1994.

(B) Part 219: Organic Material Emissions Standards and Limitations for the Metro-East Area, Subpart V; Air Oxidation Processes, Sections 219.520 Emission Limitations for Air Oxidation Processes, 219.522 Savings Clause, 219.523 Compliance, 219.524 Determination of Applicability, and 219.525 Emission Limitations for Air Oxidation Processes (Renumbered) at 18 Ill. Reg. 17001, effective November 15, 1994.

(115) On May 5, 1995, and May 26, 1995, the State submitted an amended coating rule which consisted of a tightened applicability cut-off level for wood furniture coating operations to the Ozone Control Plan for the Chicago and Metro-East St. Louis areas.

(i) *Incorporation by reference.* Illinois Administrative Code, Title 35: Environmental Protection, Subtitle B: Air Pollution, Chapter I: Pollution Control Board, Subchapter c: Emissions Standards and Limitations for Stationary Sources.

(A) Part 218: Organic Material Emission Standards and Limitations for the Chicago Area, Subpart F; Coating Operations, Sections 218.208 Exemptions from Emission Limitations, Subsection (b), amended at 19 Ill. Reg. 6848, effective May 9, 1995.

(B) Part 219: Organic Material Emissions Standards and Limitations for the Metro-East Area, Subpart F; Coating Operations, Section 219.208 Exemptions from Emission Limitations, Subsection (b), amended at 19 Ill. Reg. 6958, effective May 9, 1995.

(116) On May 5, 1995, and May 26, 1995, the State submitted a rule for automotive/transportation and business machine plastic parts coating operations, which consisted of new volatile organic compound emission limitations to the Ozone Control Plan for the Chicago and Metro-East St. Louis areas.

(i) *Incorporation by reference.* Illinois Administrative Code, Title 35: Environmental Protection, Subtitle B: Air Pollution, Chapter I: Pollution Control Board, Subchapter c: Emissions Standards and Limitations for Stationary Sources.

(A) Part 211: Definitions and General Provisions, Subpart B; Definitions, Sections 211.660 Automotive/Transportation Plastic Parts, 211.670 Baked Coatings, 211.820 Business Machine Plastic Parts, 211.1880 Electromagnetic Interference/Radio Frequency Interference Shielding Coatings, 211.1900 Electrostatic Prep Coat, 211.2360 Flexible Coatings, 211.2630 Gloss Reducers, 211.4055 Non-Flexible Coating, 211.4740 Plastic Part, 211.5480 Reflective Argent Coating, 211.5600 Resist Coat, 211.6060 Soft Coat, 211.6140 Specialty Coatings, 211.6400 Stencil Coat, 211.6580 Texture Coat, and 211.6880 Vacuum Metallizing, amended at 19 Ill. 6823, effective May 9, 1995.

(B) Part 218: Organic Material Emission Standards and Limitations for the Chicago Area, Subpart F; Coating Operations, Sections 218.204 Emission Limitations, Subsection (n) Plastic Parts Coating: Automotive/Transportation and (o) Plastic Parts Coating: Business Machine, 218.205 Daily-Weighted Average Limitations, Subsection (g), and 218.207 Alternative Emission Limitations, Subsection (i), amended at 19 Ill. 6848, effective May 9, 1995.

(C) Part 219: Organic Material Emissions Standards and Limitations for the Metro-East Area, Subpart F; Coating Operations, Section 219.204 Emission Limitations, Subsection (m) Plastic Parts Coating: Automotive/Transportation and (n) Plastic Parts Coating: Business Machine, 219.205 Daily-Weighted Average Limitations, Subsection (f), and 219.207 Alternative Emission Limitations, Subsection (h), amended at 19 Ill. Reg. 6958, effective May 9, 1995.

(117) On May 31, 1995, the State submitted amended lithographic printing rules which consisted of revised definitions, and revisions to the Ozone Control Plan for the Chicago and Metro-East St. Louis areas.

(i) *Incorporation by reference.* Illinois Administrative Code, Title 35: Environmental Protection, Subtitle B: Air Pollution, Chapter I: Pollution Control Board, Subchapter c: Emissions Standards and Limitations for Stationary Sources.

(A) Part 211: Definitions and General Provisions, Subpart B: Definitions, Sections 211.474 Alcohol, 211.560 As-Applied Fountain Solution, 211.2850 Heatset Web Offset Lithographic Printing Line, 211.4065 Non-Heatset, 211.5980 Sheet-Fed added at 19 Ill. Reg. 6823, effective May 9, 1995.

(B) Part 218: Organic Material Emission Standards and Limitations for the Chicago Area, Subpart H; Printing and Publishing, Sections 218.405 Lithographic Printing: Applicability, 218.406 Provisions Applying to Heatset Web Offset Lithographic Printing Prior to March 15, 1996, 218.407 Emissions Limitations and Control Requirements for Lithographic Printing Lines On and

After March 15, 1996, 218.408 Compliance Schedule for Lithographic Printing on and After March 15, 1996, 218.409 Testing for Lithographic Printing On and After March 15, 1996, 218.410 Monitoring Requirements for Lithographic Printing, 218.411 Recordkeeping and Reporting for Lithographic Printing added at 19 Ill. Reg. 6848, effective May 9, 1995.

(C) Part 219: Organic Material Emissions Standards and Limitations for the Metro-East Area, Subpart H; Printing and Publishing, Sections 219.405 Lithographic Printing: Applicability, 219.406 Provisions Applying to Heatset Web Offset Lithographic Printing Prior to March 15, 1996, 219.407 Emissions Limitations and Control Requirements for Lithographic Printing Lines On and After March 15, 1996, 219.408 Compliance Schedule for Lithographic Printing on and After March 15, 1996, 219.409 Testing for Lithographic Printing On and After March 15, 1996, 219.410 Monitoring Requirements for Lithographic Printing, 219.411 Recordkeeping and Reporting for Lithographic Printing added at 19 Ill. Reg. 6848, effective May 9, 1995.

(118) On October 24, 1994, the State submitted a site-specific revision to the State Implementation Plan establishing lubricant selection and temperature control requirements for Alumax Incorporated, Morris, Illinois facility's hot and cold aluminum rolling mills, as part of the Ozone Control Plan for the Chicago area.

(i) *Incorporation by reference.* September 1, 1994, Opinion and Order of the Illinois Pollution Control Board AS 92–13, effective September 1, 1994.

(119) On May 5, 1995, and May 26, 1995, the State submitted a revised rule tightening volatile organic compound emission limitations for certain surface coating operations in the Chicago and Metro-East St. Louis areas.

(i) *Incorporation by reference.* Illinois Administrative Code, Title 35: Environmental Protection, Subtitle B: Air Pollution, Chapter I: Pollution Control Board, Subchapter c: Emissions Standards and Limitations for Stationary Sources.

(A) Part 218: Organic Material Emission Standards and Limitations for the Chicago Area, Subpart F; Coating Operations, Sections 218.204 Emission Limitations, 218.205 Daily-Weighted Average Limitations, 218.207 Alternative Emission Limitations, 218.208 Exemptions From Emission Limitations, 218.210 Compliance Schedule, 218.212 Cross-line Averaging to Establish Compliance for Coating Lines, 218.213 Recordkeeping and Reporting for Cross-line Averaging Participating Coating Lines, 218.214 Changing Compliance Methods, 218 Appendix H Baseline VOM Content Limitations for Subpart F, Section 218.212 Cross-Line Averaging, amended at 19 Ill. 6848, effective May 9, 1995.

(B) Part 219: Organic Material Emissions Standards and Limitations for the Metro-East Area, Subpart F; Coating Operations, Sections 219.204 Emission Limitations, 219.205 Daily-Weighted Average Limitations, 219.207 Alternative Emission Limitations, 219.208 Exemptions From Emission Limitations, 219.210 Compliance Schedule, 219.212 Cross-line Averaging to Establish Compliance for Coating Lines, 219.213 Recordkeeping and Reporting for Cross-line Averaging Participating Coating Lines, 219.214 Changing Compliance Methods, 219 Appendix H Baseline VOM Content Limitations for Subpart F, Section 219.212 Cross-line Averaging, amended at 19 Ill. Reg. 6958, effective May 9, 1995.

(120) On May 5, 1995, and May 31, 1995, the State of Illinois submitted a rule for motor vehicle refinishing operations, which consisted of new volatile organic material (VOM) emission limitations to the Ozone Control Plan for the Chicago and Metro East St. Louis areas. This State Implementation Plan revision contains rules which establish VOM content limits for certain coatings and surface preparation products used in automobile and mobile equipment refinishing operations in the Chicago and Metro-East area, as well as requires these operations to meet certain equipment and work practice standards to further reduce VOM.

(i) *Incorporation by reference.* Illinois Administrative Code, Title 35: Environmental Protection, Subtitle B: Air Pollution, Chapter I: Pollution Control Board, Subchapter c: Emissions Standards and Limitations for Stationary Sources.

(A) Part 211: Definitions and General Provisions, Subpart B; Definitions,

Sections 211.240 Adhesion Promoter, 211.495 Anti-Glare/Safety Coating, 211.685 Basecoat/Clearcoat System, 211.1875 Elastomeric Materials, 211.3915 Mobile Equipment, 211.3960 Motor Vehicles, 211.3965 Motor Vehicle Refinishing, 211.5010 Precoat, 211.5061 Pretreatment Wash Primer, 211.5080 Primer Sealer, 211.5090 Primer Surfacer Coat, 211.6145 Specialty Coatings for Motor Vehicles, 211.6540 Surface Preparation Materials, 211.6620 Three or Four Stage Coating System, 211.6695 Topcoat System, 211.6720 Touch-Up Coating, 211.6860 Uniform Finish Blender, amended at 19 Ill. 6823, effective May 9, 1995.

(B) Part 218: Organic Material Emission Standards and Limitations for the Chicago Area, Subpart HH; Motor Vehicle Refinishing, Sections 218.780 Emission Limitations, 218.782 Alternative Control Requirements, 218.784 Equipment Specifications, 218.786 Surface Preparation Materials, 218.787 Work Practices, 218.788 Testing, 218.789 Monitoring and Record keeping for Control Devices, 218.790 General Record keeping and Reporting, 218.791 Compliance Date, 218.792 Registration, amended at 19 Ill. 6848, effective May 9, 1995.

(C) Part 219: Organic Material Emissions Standards and Limitations for the Metro-East Area, Subpart HH; Motor Vehicle Refinishing, Sections 219.780 Emission Limitations, 219.782 Alternative Control Requirements, 219.784 Equipment Specifications, 219.786 Surface Preparation Materials, 219.787 Work Practices, 219.788 Testing, 219.789 Monitoring and Record keeping for Control Devices, 219.790 General Record keeping and Reporting, 219.791 Compliance Date 219.792 Registration, amended at 19 Ill. Reg. 6958, effective May 9, 1995.

(D) Sections 218.792 and 219.792 were repealed in 2013 and are removed without replacement; see paragraph (c)(201) of this section.

(121) On May 23, 1995, and June 7, 1995, the State submitted volatile organic compound control regulations for incorporation in the Illinois State Implementation Plan for ozone.

(i) *Incorporation by reference.* (A) Title 35: Environmental Protection, Subtitle B: Air Pollution, Chapter I: Pollution Control Board, Subchapter c: Emission Standards and Limitations for Stationary Sources, Part 211: Definitions and General Provisions, Subpart B: Definitions, Sections 211.695, 211.696, 211.5245, 211.6025. These sections were adopted on May 4, 1995, Amended at 19 Ill. Reg. 7344, and effective May 22, 1995.

(B) Title 35: Environmental Protection, Subtitle B: Air Pollution, Chapter I: Pollution Control Board, Subchapter c: Emission Standards and Limitations for Stationary Sources, Part 218: Organic Material Emission Standards and Limitations for the Chicago Area, Subpart V: 218.500, 218.501, 218.502, 218.503, 218.504, 218.505, 218.506. These sections were adopted on May 4, 1995, Amended at 19 Ill. Reg. 7359, and effective May 22, 1995.

(C) Title 35: Environmental Protection, Subtitle B: Air Pollution, Chapter I: Pollution Control Board, Subchapter c: Emission Standards and Limitations for Stationary Sources, Part 219: Organic Material Emission Standards and Limitations for the Metro East Area, Subpart V: 219.500, 219.501, 219.502, 219.503, 219.504, 219.505, 219.506. These sections were adopted on May 4, 1995, Amended at 19 Ill. Reg. 7385, and effective May 22, 1995.

(122) On June 26, 1995, the Illinois Environmental Protection Agency (IEPA) submitted a State Implementation Plan (SIP) revision containing the 1992 enhancements to the Illinois vehicle inspection and maintenance (I/M) program. Such enhancements were originally developed to meet the I/M performance standard as called for in the United States Environmental Protection Agency's (USEPA's) proposed 'post-1987' I/M SIP policy and specified in the settlement agreement entered into by the parties in *Wisconsin* v. *Reilly*, Case No. 87–C–0395, E.D. Wis. The submittal includes authorizing legislation P.A. 86–1433, signed into law on September 12, 1990 and procedural rules published in the Illinois Register on June 26, 1992 at Volume 16, Issue #16.

(i) *Incorporation by reference.* (A) 35 Illinois Administrative Code 276; Sections 276.101, 276.102, 276.204, 276.206, 276.301, 276.303, 276.304, 276.307, 276.308, 276.309, 276.310, 276.311, 276.401, 276.402, 276.701, 276.702, and 276.703 amended or added at 16 Ill. Reg. 10230, effective June 15, 1992.

(ii) *Other material.* (A) Public Act 86–1433 adopted by the Illinois General Assembly on June 29, 1990, signed into law by Governor Edgar on September 12, 1990 effective September 12, 1990 (Sections 2,3, and 4) and January 1, 1991 (Section 1). (B) June 26, 1995 letter and attachments from the IEPA's Bureau of Air Chief to the USEPA's Regional Air and Radiation Division Director submitting Illinois' revision to the ozone SIP.

(123) On May 5, 1995, May 26, 1995, and May 31, 1995, the State of Illinois submitted miscellaneous revisions to its Volatile Organic Material (VOM) Reasonably Available Control Technology (RACT) rules contained in 35 Illinois Administrative Code Part 218: Organic Material Emission Standards and Limitations for the Chicago Area, and Part 219: Organic Material Emission Standards and Limitations for the Metro East Area. These amendments clarify certain applicability provisions, control requirements, and compliance dates contained within these regulations. Also included in these amendments is an exemption for certain polyethylene foam packaging operations from VOM RACT requirements.

(i) *Incorporation by reference.* Illinois Administrative Code, Title 35: Environmental Protection, Subtitle B: Air Pollution, Chapter I: Pollution Control Board, Subchapter c: Emission Standards and Limitations for Stationary Sources.

(A) Part 218: Organic Material Emission Standards and Limitations for the Chicago Area, Subpart A: General Provisions, Section 218.106; Subpart T: Pharmaceutical Manufacturing, Section 218.480; Subpart DD: Aerosol Can Filling, Section 218.686; Subpart RR: Miscellaneous Organic Chemical Process, Section 218.966; Subpart TT: Other Emission Units, Section 218.980. Amended at 19 Ill. Reg. 6848; effective May 9, 1995.

(B) Part 219: Organic Material Emission Standards and Limitations for the Metro East Area, Subpart T: Pharmaceutical Manufacturing, Section 219.480; Subpart TT: Other Emission Units, Section 219.980. Amended at 19 Ill. Reg. 6958, effective May 9, 1995.

(124) The State of Illinois requested a revision to the Illinois State Implementation Plan (SIP). This revision is for the purpose of establishing and implementing a Clean-Fuel Fleet Program in the Chicago ozone nonattainment area, which includes Cook, DuPage, Grundy (Aux Sable and Goose Lake townships only), Kane, Kendall (Oswego township only), Lake, McHenry, and Will counties, to satisfy the federal requirements for a Clean Fuel Fleet Program to be part of the SIP for Illinois.

(i) *Incorporation by reference.* (A) 35 Illinois Administrative Code 241; Sections 241.101, 241.102, 241.103, 241.104, 241.110, 241.111, 241.112, 241.113, 241.114, 241.115, 241.130, 241.131, 241.140, 241.141, 241.142, 241. Appendix A, 241. Appendix B adopted in R95–12 at 19 Ill. Reg. 13265, effective September 11, 1995.

(ii) *Other material.* (A) September 29, 1995 letter and attachments from the Illinois Environmental Protection Agency's Bureau of Air Chief to the USEPA's Regional Air and Radiation Division Director submitting Illinois' revision to the ozone SIP.

(125) On November 14, 1995 the State submitted requested revisions to the Illinois State Implementation Plan in the form of revisions to the definitions of Organic Material and Organic Materials, Organic Solvent, Petroleum Liquid and Volatile Organic Material (VOM) or Volatile Organic Compound (VOC) intended to exempt acetone from regulation as a VOC.

(i) *Incorporation by reference.* Illinois Administrative Code, Title 35: Environmental Protection, Subtitle B: Air Pollution, Chapter I: Pollution Control Board, Subchapter c: Emission Standards and Limitations for Stationary Sources, Part 211: Definitions and General Provisions, Subpart B: Definitions, Section 211.4250 Organic Material and Organic Materials, Section 211.4260 Organic Solvent, Section 211.4610 Petroleum Liquid, Section 211.7150 Volatile Organic Material (VOM) or Volatile Organic Compounds (VOC). Amended at 19 Ill. Reg. 15176, effective October 19, 1995.

(126) On November 15, 1995 the State submitted a requested revision to the Illinois State Implementation Plan in the form of a revision to the definition Volatile Organic Material (VOM) or

Volatile Organic Compound (VOC) intended to exempt parachlorobenzotrifluoride and cyclic, branched or linear completely methylated siloxanes from the definition of VOM or VOC and thereby, from regulation as a VOC.

(i) *Incorporation by reference.* Illinois Administrative Code, Title 35: Environmental Protection, Subtitle B: Air Pollution, Chapter I: Pollution Control Board, Subchapter c: Emission Standards and Limitations for Stationary Sources, Part 211: Definitions and General Provisions, Subpart B: Definitions, Section 211.7150 Volatile Organic Material (VOM) or Volatile Organic Compounds (VOC). Amended at 19 Ill. Reg. 11066, effective July 12, 1995.

(127) On October 21, 1993, and May 26, 1995, Illinois submitted volatile organic compound control regulations for incorporation in the Illinois State Implementation Plan for ozone.

(i) *Incorporation by reference.* (A) Illinois Administrative Code Title 35: Environmental Protection, Subtitle B: Air Pollution, Chapter I: Pollution Control Board, Subchapter c: Emissions Standards and Limitations for Stationary Sources, Part 219: Organic Material Emissions Standards and Limitations for Metro East Area, Subpart PP: 219.920, 219.923, 219.927, 219.928; Subpart QQ: 219.940, 219.943, 219.947, 219.948; Subpart RR: 219.960, 219.963, 219.967, 219.968; Subpart TT: 219.980, 219.983, 219.987, 219.988; and Subpart UU. These Subparts were adopted on September 9, 1993, Amended at 17 Ill. Reg. 16918, effective September 27, 1993.

(B) Illinois Administrative Code Title 35: Environmental Protection, Subtitle B: Air Pollution, Chapter I: Pollution Control Board, Subchapter c: Emissions Standards and Limitations for Stationary Sources, Part 219: Organic Material Emissions Standards and Limitations for Metro East Area, Subpart PP: 219.926; Subpart QQ: 219.946; Subpart RR: 219.966; and Subpart TT: 219.986. These Subparts were adopted on April 20, 1995, Amended at 19 Ill. Reg. 6958, effective May 9, 1995.

(128) On November 30, 1994, the State submitted volatile organic compound control regulations for incorporation in the Illinois State Implementation Plan for ozone.

(i) *Incorporation by reference.* (A) Title 35: Environmental Protection, Subtitle B: Air Pollution, Chapter I: Pollution Control Board, Subchapter c: Emission Standards and Limitations for Stationary Sources, Part 211: Definitions and General Provisions, Subpart B: Definitions, Sections 211.2300, 211.3695. These sections were adopted on October 20, 1994, Amended at 18 Ill. Reg. 16929, and effective November 15, 1994.

(B) Title 35: Environmental Protection, Subtitle B: Air Pollution, Chapter I: Pollution Control Board, Subchapter c: Emission Standards and Limitations for Stationary Sources, Part 218: Organic Material Emission Standards and Limitations for the Chicago Area, Subpart B: 218.119, 218.120, 218.125, 218.127, 218.128, 218.129. These sections were adopted on October 20, 1994, Amended at 18 Ill. Reg. 16950, and effective November 15, 1994.

(C) Title 35: Environmental Protection, Subtitle B: Air Pollution, Chapter I: Pollution Control Board, Subchapter c: Emission Standards and Limitations for Stationary Sources, Part 219: Organic Material Emission Standards and Limitations for the Metro East Area, Subpart B: 219.119, 219.120, 219.125, 219.127, 219.128, 219.129. These sections were adopted on October 20, 1994, Amended at 18 Ill. Reg. 16980, and effective November 15, 1994.

(129) [Reserved]

(130) On June 29, 1995, the State of Illinois submitted a revision to the State Implementation Plan (SIP) for the implementation of an enhanced motor vehicle inspection and maintenance (I/M) program in the Chicago and East St. Louis ozone nonattainment areas. This revision included the Vehicle Emissions Inspection Law of 1995 (625 ILCS 5/13B), P.A. 88–533, effective January 18, 1995; I/M regulations (R94–19 and R94–20) adopted on December 1, 1994, by the Illinois Pollution Control Board; February 29, 1996, Request-For-Proposals; April 22, 1996, letter of commitment; plus additional support documentation including modeling demonstration.

(i) *Incorporation by reference.* (A) Vehicle Emissions Inspection Law of 1995 (625 ILCS 5/13B), Public Act 88–533, signed into law by Governor Edgar on January 18, 1995 effective January 18, 1995.

(B) 35 Illinois Administrative Code 240; Sections 240.101, 240.102, 240.104, 240.105, 240.106, 240.107, 240.124, 240.125, 240.151, 240.152, 240.153, 240.161, 240.162, 240.163, 240.164, 240.171, 240.Table A, 240.Table B amended or added in R94–19 at 18 Ill. Reg. 18228, effective December 14, 1994.

(C) 35 Illinois Administrative Code 240; Sections 240.172, 240.173 amended in R94–20 at 18 Ill. Reg. 18013, effective December 12, 1994.

(ii) *Additional materials.* (A) February 29, 1996, Request-For-Proposals submitted on April 22, 1996.

(B) April 22, 1996, letter of commitment and attachments from IEPA's Bureau of Air Chief to the USEPA's Regional Air and Radiation Division Director.

(131) On January 10, 1996, the State of Illinois submitted a site-specific State Implementation Plan (SIP) revision request for ozone, which extends the required deadline for the Rexam Medical Packaging Inc. facility in Mundelein, Lake County, Illinois (Rexam), to comply with 35 Illinois Administrative Code, part 218, subpart H, as it applies to its Inline Press Number No.105, Inline Press No. 111, Offline 32-inch Press, Offline 36-inch Press, and Offline 42-inch press. The compliance date is extended from March 15, 1995, until June 15, 1996, or upon submittal of the ''certificate of compliance'' required under section 218.404 of subpart H, whichever occurs first. The variance includes a compliance plan requiring the installation and use of a catalytic oxidizer to control emissions from Inline Press No. 105, Inline Press No. 111, Offline 32-inch Press, and Offline 42-inch Press. The Offline 36-inch Press is required to convert to water-based ink, or be controlled by the oxidizer if the press is not converted by March 1, 1996. The variance is contingent upon certain compliance milestone conditions.

(i) *Incorporation by reference.* (A) Illinois Pollution Control Board Final Opinion and Order, PCB 95–99, adopted on October 19, 1995, and effective March 15, 1995. Certification of Acceptance dated November 29, 1996, by Rexam.

(132) On January 8, 1996, Illinois submitted a site-specific revision to the State Implementation Plan establishing lubricant selection and temperature control requirements for the hot and cold aluminum operations at Reynolds Metals Company's McCook Sheet and Plate Plant in McCook, Illinois (in Cook County), as part of the Ozone Control Plan for the Chicago area.

(i) *Incorporation by reference.* September 21, 1995, Opinion and Order of the Illinois Pollution Control Board AS 91–8, effective September 21, 1995.

(133) On July 23, 1996, the Illinois Environmental Protection Agency submitted a site-specific State Implementation Plan revision request for the Chase Products Company's Broadview (Cook County), Illinois facility located at 19th Street and Gardner Road, as part of the Ozone Control Plan for the Chicago area. The resulting revision revises the control requirements codified at 35 Illinois Administrative Code Part 218 Subpart DD Section 218.686 as they apply to the Chase Products Company's Broadview facility.

(i) *Incorporation by reference.* May 16, 1996, Opinion and Order of the Illinois Pollution Control Board AS 94–4, effective May 16, 1996.

(134) On May 5, 1995, and May 26, 1995, the State of Illinois submitted a State Implementation Plan revision request to the United States Environmental Protection Agency for reactor processes and distillation operation processes in the Synthetic Organic Chemical Manufacturing Industry as part of the State's control measures for Volatile Organic Material (VOM) emissions for the Chicago and Metro-East (East St. Louis) areas. VOM, as defined by the State of Illinois, is identical to ''volatile organic compounds'' (VOC), as defined by EPA. This plan was submitted to meet the Clean Air Act requirement for States to adopt Reasonably Available Control Technology rules for sources that are covered by Control Techniques Guideline documents. The EPA approves the State Implementation Plan revision request as it applies to Stepan Company's Millsdale Facility.

(i) *Incorporation by reference.* Illinois Administrative Code, Title 35: Environmental Protection, Subtitle B: Air Pollution, Chapter I: Pollution Control

Board, Subchapter c: Emissions Standards and Limitations for Stationary Sources.

(A) Part 211: Definitions and General Provisions, Subpart B; Definitions, 211.980 Chemical Manufacturing Process Unit, 211.1780 Distillation Unit, 211.2365 Flexible Operation Unit, 211.5065 Primary Product.

(B) Part 218: Organic Material Emission Standards and Limitations for the Chicago Area, Subpart Q: Synthetic Organic Chemical and Polymer Manufacturing Plant, Sections 218.431 Applicability, 218.432 Control Requirements, 218.433 Performance and Testing Requirements, 218.434 Monitoring Requirements, 218.435 Recordkeeping and Reporting Requirements, 218.436 Compliance Date, 218 Appendix G, TRE Index Measurement for SOCMI Reactors and Distillation Units, amended at 19 Ill. Reg. 6848, effective May 9, 1995.

(135) On January 23, 1996, Illinois submitted a site-specific revision to the State Implementation Plan which relaxes the volatile organic material (VOM) content limit for fabricated product adhesive operations at Solar Corporation's Libertyville, Illinois facility from 3.5 pounds VOM per gallon to 5.75 pounds VOM per gallon.

(i) *Incorporation by reference.* July 20, 1995, Opinion and Order of the Illinois Pollution Control Board, AS 94–2, effective July 20, 1995.

(136) On January 9, 1997, Illinois submitted a site-specific revision to the State Implementation Plan which grants a temporary variance from certain automotive plastic parts coating volatile organic material requirements at Solar Corporation's Libertyville, Illinois facility.

(i) *Incorporation by reference.* September 5, 1996, Opinion and Order of the Illinois Pollution Control Board, PCB 96–239, effective September 13, 1996. Certificate of Acceptance signed September 13, 1996.

(137) Approval—On April 25, 1997, the Illinois Environmental Protection Agency submitted a revision to the State Implementation Plan for general conformity rules. The general conformity rules enable the State of Illinois to implement the general conformity requirements in the nonattainment or maintenance areas at the State or local level in accordance with 40 CFR part 93, subpart B—Determining Conformity of General Federal Actions to State or Federal Implementation Plans.

(i) *Incorporation by reference.* (A) Illinois Administrative Code, Title 35: Environmental Protection, Subtitle B: Air Pollution, Chapter 2: Environmental Protection Agency, Part 255 General Conformity: Criteria and Procedures. Adopted at 21 Ill. Reg. effective March 6, 1997.

(138) On May 5, 1995, and May 26, 1995, the State of Illinois submitted State Implementation Plan (SIP) revision requests for reactor processes and distillation operation processes in the Synthetic Organic Chemical Manufacturing Industry as part of the State's control measures for Volatile Organic Material emissions for the Metro-East (East St. Louis) area. This State Implementation Plan revision request is approved as it applies to Monsanto Chemical Group's Sauget Facility.

(i) *Incorporation by reference.* Illinois Administrative Code, Title 35: Environmental Protection, Subtitle B: Air Pollution, Chapter I: Pollution Control Board, Subchapter c: Emissions Standards and Limitations for Stationary Sources.

(A) Part 211: Definitions and General Provisions, Subpart B; Definitions, 211.980 Chemical Manufacturing Process Unit, 211.1780 Distillation Unit, 211.2365 Flexible Operation Unit, 211.5065 Primary Product, amended at 19 Ill. Reg. 6823, effective May 9, 1995.

(B) Part 219: Organic Material Emission Standards and Limitations for the Metro East Area, Subpart Q: Synthetic Organic Chemical and Polymer Manufacturing Plant, Sections 219.431 Applicability, 219.432 Control Requirements, 219.433 Performance and Testing Requirements, 219.434 Monitoring Requirements, 219.435 Recordkeeping and Reporting Requirements, 219.436 Compliance Date, 219.Appendix G, TRE Index Measurement for SOCMI Reactors and Distillation Units, amended at 19 Ill. Reg. 6958, effective May 9, 1995.

(139) On September 8, 1997, the State of Illinois submitted tightened volatile

organic material rules for cold cleaning degreasing operations in the Chicago and the Metro-East ozone nonattainment areas.

(i) *Incorporation by reference*. Illinois Administrative Code, Title 35: Environmental Protection, Subtitle B: Air Pollution, Chapter I: Pollution Control Board, Subchapter c: Emissions Standards and Limitations for Stationary Sources.

(A) Part 211: Definitions and General Provisions, Subpart B: Definitions, Section 211.1885, amended at 21 Ill. 7695, effective June 9, 1997.

(B) Part 218: Organic Material Emission Standards and Limitations for the Chicago Area, Subpart E: Solvent Cleaning, Section 218.182, amended at 21 Ill. 7708, effective June 9, 1997.

(C) Part 219: Organic Material Emissions Standards and Limitations for the Metro-East Area, Subpart E: Solvent Cleaning, Section 219.182, amended at 21 Ill. 7721, effective June 9, 1997.

(140) On March 5, 1998, the State of Illinois submitted amended rules for the control of volatile organic material emissions from wood furniture coating operations in the Chicago and Metro-East (East St. Louis) ozone nonattainment areas, as a requested revision to the ozone State Implementation Plan. This plan was submitted to meet the Clean Air Act requirement for States to adopt Reasonably Available Control Technology rules for sources that are covered by Control Techniques Guideline documents.

(i) *Incorporation by reference*. Illinois Administrative Code, Title 35: Environmental Protection, Subtitle B: Air Pollution, Chapter I: Pollution Control Board, Subchapter c: Emissions Standards and Limitations for Stationary Sources.

(A) Part 211: Definitions and General Provisions, Subpart B; Definitions, 211.1467 Continuous Coater, 211.1520 Conventional Air Spray, 211.6420 Strippable Spray Booth Coating, 211.7200 Washoff Operations, amended at 22 Ill. Reg. 3497, effective February 2, 1998.

(B) Part 218: Organic Material Emission Standards and Limitations for the Chicago Area, Subpart F: Coating Operations 218.204 Emission Limitations, 218.205 Daily-weighted Average Limitations, 218.210 Compliance Schedule, 218.211 Recordkeeping and Reporting, 218.215 Wood Furniture Coating Averaging Approach, 218.216 Wood Furniture Coating Add-On Control Use, 218.217 Wood Furniture Coating Work Practice Standards, amended at 22 Ill. Reg. 3556, effective February 2, 1998.

(C) Part 219: Organic Material Emission Standards and Limitations for the Metro East Area, Subpart F: Coating Operations 219.204 Emission Limitations, 219.205 Daily-weighted Average Limitations, 219.210 Compliance Schedule, 219.211 Recordkeeping and Reporting, 219.215 Wood Furniture Coating Averaging Approach, 219.216 Wood Furniture Coating Add-On Control Use, 219.217 Wood Furniture Coating Work Practice Standards, amended at 22 Ill. Reg. 3517, effective February 2, 1998.

(141) On November 14, 1995, May 9, 1996, June 14, 1996, and February 3, 1997, October 16, 1997, and October 21, 1997, the State of Illinois submitted State Implementation Plan (SIP) revision requests to meet commitments related to the conditional approval of Illinois' May 15, 1992, SIP submittal for the Lake Calumet (SE Chicago), McCook, and Granite City, Illinois, Particulate Matter (PM) nonattainment areas. The EPA is approving the portion of the SIP revision request that applies to the Granite City area. The SIP revision request corrects, for the Granite City PM nonattainment area, all of the deficiencies of the May 15, 1992, submittal.

(i) *Incorporation by reference*. (A) Illinois Administrative Code Title 35: Environmental Protection, Subtitle B: Air Pollution, Chapter 1: Pollution Control Board, Subchapter c: Emission Standards and Limitations for Stationary Sources, Part 212: Visible and Particulate Matter Emissions, Subpart A: General, Sections 212.107, 212.108, 212.109, 212.110; Subpart L: Particulate Matter from Process Emission Sources, Section 212.324; Subpart N: Food Manufacturing, Section 212.362; Subpart Q: Stone, Clay, Glass and Concrete Manufacturing, Section 212.425; Subpart R: Primary and Fabricated Metal Products and Machinery Manufacture, Sections 212.446, 212.458; Subpart S: Agriculture, Section 212.464. Adopted at 20 *Illinois Register* 7605, effective May 22, 1996.

(B) Joint Construction and Operating Permit: Application Number 95010005, Issued on October 21, 1997, to Granite City Division of National Steel Corporation.

(142) On May 5, 1995, and May 26, 1995, the State of Illinois submitted State Implementation Plan revision requests for reactor processes and distillation operations in the Synthetic Organic Chemical Manufacturing Industry as part of the State's control measures for Volatile Organic Material emissions for the Chicago and Metro-East (East St. Louis) areas. This plan was submitted to meet the Clean Air Act requirement for States to adopt Reasonably Available Control Technology rules for sources that are covered by Control Techniques Guideline documents.

(i) *Incorporation by reference.* Illinois Administrative Code, Title 35: Environmental Protection, Subtitle B: Air Pollution, Chapter I: Pollution Control Board, Subchapter c: Emissions Standards and Limitations for Stationary Sources.

(A) Part 211: Definitions and General Provisions, Subpart B; Definitions, 211.980 Chemical Manufacturing Process Unit, 211.1780 Distillation Unit, 211.2365 Flexible Operation Unit, 211.5065 Primary Product, amended at 19 Ill. Reg. 6823, effective May 9, 1995.

(B) Part 218: Organic Material Emission Standards and Limitations for the Chicago Area, Subpart Q: Synthetic Organic Chemical and Polymer Manufacturing Plant, Sections 218.431 Applicability, 218.432 Control Requirements, 218.433 Performance and Testing Requirements, 218.434 Monitoring Requirements, 218.435 Recordkeeping and Reporting Requirements, 218.436 Compliance Date, 218.Appendix G, TRE Index Measurement for SOCMI Reactors and Distillation Units, amended at 19 Ill. Reg. 6848, effective May 9, 1995.

(C) Part 219: Organic Material Emission Standards and Limitations for the Metro East Area, Subpart Q: Synthetic Organic Chemical and Polymer Manufacturing Plant, Sections 219.431 Applicability, 219.432 Control Requirements, 219.433 Performance and Testing Requirements, 219.434 Monitoring Requirements, 219.435 Recordkeeping and Reporting Requirements, 219.436 Compliance Date, 219.Appendix G, TRE Index Measurement for SOCMI Reactors and Distillation Units, amended at 19 Ill. Reg. 6958, effective May 9, 1995.

(143) [Reserved]

(144) On September 3, 1997, the Illinois Environmental Protection Agency submitted a temporary, site specific State Implementation Plan revision request for the D.B. Hess Company, Incorporated's (DB Hess) lithographic printing operations located in Woodstock (McHenry County), Illinois. This variance took the form of a March 20, 1997, Opinion and Order of the Illinois Pollution Control Board issued in PCB 96–194 (Variance—Air). The variance which will expire on March 30, 1999, grants DB Hess a variance from 35 Illinois Administrative Code Sections 218.407(a)(1)(C),(D),(E) and 218.411(b)(1), (2)and (3) for heatset web offset presses 3, 4, and 5 which are located at the Woodstock (McHenry County), Illinois facility.

(i) *Incorporation by reference.* (A) March 20, 1997, Opinion and Order of the Illinois Pollution Control Board in PCB 96–194 (Variance—Air) which was effective on March 20, 1997 and expires on March 30, 1999.

(ii) The variance is subject to the following conditions (the dates specified indicate the latest start dates of compliance periods terminating on March 30, 1999, when presses 3, 4, and 5 must be replaced by complying presses or must be brought into compliance with the rules from which DB Hess seeks the variance):

(A) On or before March 20, 1997, the combined actual volatile organic material (VOM) emissions from all of the presses in the Woodstock plant shall not exceed 18 tons per year or 1.5 tons per month.

(B) On or before March 20, 1997, DB Hess shall use only cleaning solutions with VOM concentrations less than or equal to 30 percent by weight.

(C) On or before March 20, 1997, DB Hess shall use cleaning solutions on presses 3, 4, and 5 that have a VOM composite partial vapor pressure of less than 10 millimeters (mm) of Mercury (Hg) at 20 degrees Celsius. These cleaning solutions must comply with the requirements of 35 IAC 218.407(a)(4).

(D) On or before March 20, 1997, DB Hess shall store and dispose of all cleaning towels in closed containers.

(E) On or before May 5, 1997, DB Hess shall monitor presses 3, 4, and 5 pursuant to 35 IAC 218.410 (b), (c), and (e).

(F) On or before May 5, 1997, DB Hess shall use fountain solutions on presses 3, 4, and 5 that are less than 5 percent VOM by volume, as applied, and which contain no alcohol.

(G) On or before May 5, 1997, DB Hess shall prepare and maintain records pursuant to 35 IAC 218.411 (b), (c), and (d) for presses 3, 4, and 5 and must show compliance with the requirements of 35 IAC 218.407(a)(1) (C), (D), and (E) and with the requirements of 35 IAC 218.411(b) (1), (2), and (3) for these presses.

(H) On or before May 5, 1997, DB Hess shall submit quarterly reports to the Illinois Environmental Protection Agency's (IEPA's) Compliance and Systems Management Section demonstrating compliance with the terms of the Illinois Pollution Control Board Order.

(I) On or before March 30, 1998, DB Hess shall cease operation of press 3.

(J) On or before March 30, 1999, DB Hess shall either:

(*1*) Cease operation of presses 4 and 5, and notify the IEPA of such cessation; or

(*2*) Retrofit presses 4 and 5 or replace presses 4 and 5 in compliance with 35 IAC 218.407 (a)(1) (C), (D), and (E) and with 35 IAC 218.411(b) (1), (2), and(3). In this case:

(*i*) DB Hess must apply for and obtain necessary construction permits by March 30, 1998, or six months before retrofitting or replacing presses 4 and 5, whichever is earlier.

(*ii*) DB Hess must send monthly status reports, due the 15th day of each month, to the IEPA, covering the progress of the installation of the presses and control equipment and testing of the control equipment.

(K) On or before March 30, 1999, DB Hess shall cease operations at presses 3, 4, and 5 except for those presses for which it has obtained permits and installed controls, which have been tested and demonstrated to be in compliance with applicable rules.

(145) On September 16, 1998, the State of Illinois submitted amendments to Volatile Organic Material (VOM) rules affecting Illinois' ozone attainment area (the area of the State not including the Chicago and Metro-East ozone nonattainment areas). The amendments contain various deletions of obsolete provisions, changes of some word usage to comport Part 215 with other Illinois VOM regulations, and the addition of certain exemptions from VOM coating requirements.

(i) *Incorporation by reference*. Illinois Administrative Code, Title 35: Environmental Protection, Subtitle B: Air Pollution, Chapter I: Pollution Control Board, Subchapter c: Emissions Standards and Limitations for Stationary Sources.

(A) Part 215: Organic Material Emission Standards and Limitations; Subpart A: General Provisions, 215.104 Definitions, 215.109 Monitoring for Negligibly-Reactive Compounds; Subpart F: Coating Operations, 215.204 Emission Limitations for Manufacturing Plants, 215.205 Alternative Emission Limitations, 215.206 Exemptions from Emission Limitations, 215.207 Compliance by Aggregation of Emissions Units, 215.211 Compliance Dates and Geographical Areas, 215.212 Compliance Plan, and 215.214 Roadmaster Emissions Limitations (Repealed); Subpart Z: Dry Cleaners, 215.601 Perchloroethylene Dry Cleaners (Repealed), 215.602 Exemptions (Repealed), 215.603 Leaks (Repealed), 215.604 Compliance Dates and Geographical areas (Repealed), 215.605 Compliance Plan (Repealed), and 215.606 Exception to Compliance Plan (Repealed), amended at 22 Ill. Reg. 11427, effective June 19, 1998.

(146) On February 13, 1998, the Illinois Environmental Protection Agency (IEPA) submitted a revision to the Illinois State Implementation Plan (SIP). This revision amends certain sections of the Clean-Fuel Fleet Program (CFFP) in the Chicago ozone nonattainment area to reflect that fleet owners and operators will have an additional year to meet the purchase requirements of the CFFP. The amendment changes the first date by which owners or operators of fleets must submit annual reports to IEPA from November 1, 1998 to November 1, 1999. In

addition, this revision corrects two credit values in the CFFP credit program.

(i) *Incorporation by reference.* (A) 35 Illinois Administrative Code 241; Sections 241.113, 241.130, 241.140, 241.Appendix B.Table A, 241.Appendix B.Table D adopted in R95–12 at 19 Ill. Reg. 13265, effective September 11, 1995; amended in R98–8, at 21 Ill. Reg. 15767, effective November 25, 1997.

(ii) *Other material.* (A) February 13, 1998, letter and attachments from the Illinois Environmental Protection Agency's Bureau of Air Chief to the United States Environmental Protection Agency's Regional Air and Radiation Division Director submitting Illinois' amendments to the Clean Fuel Fleet regulations as a revision to the ozone State Implementation Plan.

(147) On June 21, 1997, and December 9, 1998, the State of Illinois submitted regulations adopted by the Illinois Pollution Control Board and the Illinois Environmental Protection Agency and legislation adopted by the General Assembly and signed by the Governor related to Illinois' vehicle inspection and maintenance (I/M) program. The purpose of these submittals was to change the existing program from a basic I/M program to a fully enhanced I/M program. These changes modify the program in both the Chicago and Saint Louis (Illinois Portion) Ozone nonattainment areas.

(i) *Incorporation by reference.* (A) Illinois Administrative Code, Title 35: Environmental Protection, Subtitle B: Air Pollution, Chapter I: Pollution Control Board, Subchapter k: Emission Standards and Limitations for Mobile sources, Part 240 Mobile Sources, Except for Section 240. Table C. Adopted at 22 *Ill. Reg.* 13723, effective July 13, 1998.

(B) Illinois Administrative Code, Title 35: Environmental Protection, Subtitle B: Air Pollution, Chapter I: Pollution Control Board, Subchapter k: Emission Standards and Limitations for Mobile sources, Part 240 Mobile Sources, Section 240. Table C. Corrected at 22 *Ill. Reg.* 21120, effective July 13, 1998.

(C) Illinois Administrative Code, Title 35: Environmental Protection, Subtitle B: Air Pollution, Chapter II: Environmental Protection Agency, Part 276 Procedures to be Followed in the Performance of Inspections of Motor Vehicle Emissions. Amended at 22 *Ill. Reg.* 18867, effective September 28, 1998.

(ii) *Other materials.* (A) Transmittal letters dated June 21, 1997, and December 9, 1998.

(B) Public Act 90–475, effective August 17, 1997. This Act amends the Illinois Environmental Protection Act by changing Sections 3.32, 3.78, 21, and 22.15 and adding Sections 3.78a and 22.38.

(148) On October 13, 1998, the State of Illinois submitted a site-specific State Implementation Plan (SIP) revision affecting Volatile Organic Material controls at Central Can Company (CCC), located in Chicago, Illinois. The SIP revision allows CCC to apply can coating control rules to pail coating operations limited to certain conditions.

(i) *Incorporation by reference.* August 6, 1998, Opinion and Order of the Illinois Pollution Control Board, AS 94–18, effective July 1, 1991.

(149) On September 17, 1998, the Illinois Environmental Protection Agency submitted a site specific State Implementation Plan revision request for W.R. Grace and Company's facility, which manufactures container sealants, lubricant fluids, and concrete additives, and is located at 6050 West 51st Street in Chicago, Illinois (Cook County). This rule revision is contained in R98–16, the July 8, 1998, Opinion and Order of the Illinois Pollution Control Board, and consists of new Section 218.940(h), which exempts W.R. Grace's facility from the control requirements in 35 Illinois Administrative Code Part 218 Subpart QQ.

(i) *Incorporation by reference.* Illinois Administrative Code Title 35: Environmental Protection, Subtitle B: Air Pollution, Chapter I: Pollution Control Board, Subchapter c: Emissions Standards and Limitations for Stationary Sources, Part 218 Organic Material Emission Standards and Limitations for the Chicago Area, Subpart QQ: Miscellaneous Formulation Manufacturing Processes, Section 218.940 Applicability, paragraph (h) which was amended in R98–16 at 22 Ill. Reg. 14282, effective July 16, 1998.

(150) On November 14, 1995, May 9, 1996, June 14, 1996, February 1, 1999, and May 19, 1999, the State of Illinois submitted State Implementation Plan (SIP) revision requests to meet commitments related to the conditional approval of Illinois' May 15, 1992, SIP submittal for the Lake Calumet (Southeast Chicago), McCook, and Granite City, Illinois, Particulate Matter (PM) nonattainment areas. The EPA is approving the SIP revision request as it applies to the Lake Calumet area. The SIP revision request corrects, for the Lake Calumet PM nonattainment area, all of the deficiencies of the May 15, 1992, submittal.

(*i*) *Incorporation by reference.*

(A) Illinois Administrative Code Title 35: Environmental Protection, Subtitle B: Air Pollution, Chapter I: Pollution Control Board, Subchapter c: Emission Standards and Limitations for Stationary Sources, Part 212: Visible and Particulate Matter Emissions, Subpart A: General, Section 212.113; Subpart E: Particulate Matter from Fuel Combustion Sources, Section 212.210; Subpart K: Fugitive Particulate Matter, Sections 212.302, 212.309, and 212.316. Adopted at 20 Illinois Register 7605, effective May 22, 1996.

(B) Federally Enforceable State Operating Permit—Special: Application Number 98120091, Issued on May 14, 1999, to LTV Steel Company, Inc.

(151) On July 23, 1998, the State of Illinois submitted a State Implementation Plan (SIP) revision that included certain ''clean-up'' amendments to the State's permitting rules.

(*i*) *Incorporation by reference.*

Illinois Administrative Code, Title 35: Environmental Protection, Subtitle B: Air Pollution, Chapter I: Pollution Control Board.

(A) Subchapter A: Permits and General Provisions, Part 201: Permits and General Provisions.

(1) Subpart D: Permit Applications and Review Process, Section 201.152 Contents of Application for Construction Permit, 201.153 Incomplete Applications (Repealed), Section 201.154 Signatures (Repealed), Section 201.155 Standards for Issuance (Repealed), Section 201.157 Contents of Application for Operating Permit, Section 201.158 Incomplete Applications, Section 201.159 Signatures, 201.160 Standards for Issuance, Section 201.162 Duration, Section 201.163 Joint Construction and Operating Permits, and Section 201.164 Design Criteria. Amended at 22 Ill. Reg. 11451, effective June 23, 1998.

(2) Subpart E: Special Provisions for Operating Permits for Certain Smaller Sources, Section 201.180 Applicability (Repealed), Section 201.181 Expiration and Renewal (Repealed), Section 201.187 Requirement for a Revised Permit (Repealed), Repealed at 22 Ill. Reg. 11451, effective June 23, 1998.

(3) Subpart F: CAAPP Permits, Section 201.207 Applicability, Amended at 22 Ill. Reg. 11451, effective June 23, 1998.

(152) On February 5, 1998, the Illinois Environmental Protection Agency submitted a requested revision to the Illinois State Implementation Plan. This revision provided additional exemptions from State of Illinois permit requirements codified by the State at Part 201 of Title 35 of the Illinois Administrative Code (35 IAC Part 201). The revision also added a definition of ''Feed Mill'' to Part 211 of 35 IAC (35 IAC Part 211).

(i) *Incorporation by reference.* Illinois Administrative Code, Title 35: Environmental Protection, Subtitle B: Air Pollution, Chapter I: Pollution Control Board, Subchapter C: Emission Standards and Limitations for Stationary Sources.

(A) Part 211 Definitions and General Provisions, Subpart B: Definitions, Section 211.2285 Feed Mill. Added at 21 Ill. Reg. 7856, effective June 17, 1997.

(B) Part 201 Permits and General Conditions, Subpart C: Prohibitions, Section 201.146 Exemptions from State Permit Requirements. Amended at 21 Ill. Reg. 7878, effective June 17, 1997.

(153) On July 9, 1999, the State of Illinois submitted a site-specific State Implementation Plan (SIP) revision affecting Volatile Organic Material control requirements at Sun Chemical Corporation (Sun) in Northlake, Illinois. The SIP revision changes requirements for 17 resin storage tanks operated by Sun. Specifically, the SIP revision exempts the 17 tanks from the bottom or submerged fill pipe requirements, provided that no odor nuisance exists at the Sun Northlake facility,

and that the vapor pressures of materials stored in the tanks remain less the 0.5 pounds per square inch absolute at 70 degrees Fahrenheit.

(*i*) *Incorporation by reference.*

May 20, 1999, Opinion and Order of the Illinois Pollution Control Board, AS 99–4, effective May 20, 1999.

(155) On May 21, 1999, the Illinois Environmental Protection Agency submitted a temporary, site-specific revision to the State Implementation Plan (SIP) for sulfur dioxide (SO_2) for the Central Illinois Light Company's E.D. Edwards Generating Station in Peoria County, Illinois (CILCO Edwards). The SIP revision took the form of an April 15, 1999, Opinion and Order of the Illinois Pollution Control Board (PCB 99–80, Variance-Air). In this Opinion and Order, the IPCB granted CILCO Edwards a variance from 35 Illinois Administrative Code 214.141, and provided for a relaxation in the fuel quality limit for one of the facility's three boilers, but added an overall fuel quality limit and retained an overall SO_2 emissions cap for the three CILCO Edwards boilers. The variance will expire on February 28, 2002, unless CILCO applies to Illinois for a permanent SIP revision.

(i) *Incorporation by reference.* An April 15, 1999, Opinion and Order of the Illinois Pollution Control Board in PCB 99–80 (Variance-Air), granting a variance from 35 IAC 214.141 for Boiler No. 2 at the Central Illinois Light Company's E.D. Edwards Generating Station near Peoria, Illinois. The variance expires on February 28, 2002, unless CILCO applies to Illinois for a permanent SIP revision. If CILCO applies for a permanent SIP revision, and the IPCB allows CILCO Edwards' variance to continue unamended through July 31, 2003, as stated in the Opinion and Order, then federal approval of the variance will continue until EPA approves alternate SO_2 limits for CILCO Edwards, or until July 31, 2003, whichever is earlier.

(156) On May 8, 2001, the State submitted rules to control Oxides of Nitrogen emissions from electric generating units.

(*i*) *Incorporation by reference.* Title 35: Environmental Protection; Subtitle B: Air Pollution; Chapter I: Pollution Control Board; Subchapter C: Emission Standards and Limitations for Stationary Sources; Part 217 Nitrogen Oxides Emissions; Subpart V: Electric Power Generation. Adopted at 25 *Ill. Reg.* 5914, effective April 17, 2001.

(157) On May 8, 2001, the Illinois Environmental Protection Agency submitted revisions to 35 Ill. Adm. Code 217, Subpart W: NO[x] Trading Program for Electrical Generating Units with a request that these rules be incorporated into the Illinois State Implementation Plan. On June 11, 2001, the Illinois EPA submitted Section 9.9(f) of the Illinois Environmental Protection Act as revised by Public Act 92–012 (formerly House Bill 1599) which was approved by both Houses of the Illinois General Assembly on June 7, 2001, approved by the Governor on June 22, 2001, and became effective on July 1, 2001. Section 9.9(f) requires a May 31, 2004 final compliance date for 35 Ill. Adm. Code 215, Subparts T, U and W. This compliance date replaces the compliance date contained in Section 217.756(d)(3).

(i) *Incorporation by reference.* (A) Title 35: Environmental Protection, Subtitle B: Air Pollution, Chapter 1: Pollution Control Board, Subchapter c: Emission Standards and Limitations for Stationary Sources, Part 217 Nitrogen Oxides Emissions, Subpart W: NO[x] Trading Program for Electrical Generating Units except for 217.756(d)(3) which has been superseded by Section 9.9(f) of the Illinois Environmental Protection Act. Added at 25 Ill. Reg. 128, January 25, 2001, effective December 26, 2000.

(B) Section 9.9(f) of the Illinois Environmental Protection Act. Adopted by both Houses of the Illinois General Assembly as part of Public Act 92–0012 (previously House Bill 1599) on May 31, 2001, approved by the Governor of Illinois on June 22, 2001, effective July 1, 2001.

(158) On December 16, 1997, Bharat Mathur, Chief, Bureau of Air, Illinois Environmental Protection Agency, submitted rules for a cap and trade program regulating volatile organic compound emissions in the Chicago area. By letter dated August 23, 2001, the state requested that USEPA defer rulemaking on section 205.150(e), which

exempts new and modified sources obtaining offsets under the trading program from the requirements for traditional, full year offsets.

(i) *Incorporation by reference.* Illinois Administrative Code, Title 35, Subtitle B, Chapter I, subchapter b, Part 205, entitled Emissions Reduction Market System, adopted November 20, 1997, effective November 25, 1997, except section 205.150(e).

(159) On April 9, 2001, David Kolaz, Chief, Bureau of Air, Illinois Environmental Protection Agency, submitted rules regulating NO_X emissions from cement kilns. On May 1, 2001, Mr. Kolaz submitted rules regulating NO_X emissions from industrial boilers and turbines and requesting two minor revisions to the Illinois NO_X emissions budget. On June 18, 2001, Mr. Kolaz submitted a demonstration that Illinois' regulations were sufficient to assure that NO_X emissions in Illinois would be reduced to the level budgeted for the state by USEPA. On September 20, 2001, Mr. Kolaz sent a letter clarifying that Illinois' rules for industrial boilers and turbines require compliance on a unit-by-unit basis.

(i) *Incorporation by reference.* (A) Illinois Administrative Code, Title 35, Subtitle B, Chapter I, subchapter c, Part 211, Definitions, sections 211.955, 211.960, 211.1120, 211.3483, 211.3485, 211.3487, 211.3780, 211.5015, and 211.5020, published at 25 Ill. Reg. 4582, effective March 15, 2001.

(B) Illinois Administrative Code, Title 35, Subtitle B, Chapter I, subchapter c, Part 217, Subpart A, Section 217.104, Incorporations by Reference, published at 25 Ill. Reg. 4597, effective March 15, 2001.

(C) Illinois Administrative Code, Title 35, Subtitle B, Chapter I, subchapter c, Part 217, Subpart T, Cement Kilns, sections 217.400, 217.400, 217.402, 217.404, 217.406, 217.408, and 217.410, published at 25 Ill. Reg. 4597, effective March 15, 2001.

(D) Illinois Administrative Code, Title 35, Subtitle B, Chapter I, subchapter c, Part 211, Sections 211.4067 and 211.6130, published at 25 Ill. Reg. 5900, effective April 17, 2001.

(E) Illinois Administrative Code, Title 35, Subtitle B, Chapter I, subchapter c, Part 217, Subpart U, NO_X Control and Trading Program for Specified NO_X Generating Units, sections 217.450, 217.452, 217.454, 217.456, 217.458, 217.460, 217.462, 217.464, 217.466, 217.468, 217.470, 217.472, 217.474, 217.476, 217.478, 217.480 and 217.482, published at 25 Ill. Reg. 5914, effective April 17, 2001.

(ii) *Additional material.* (A) Letter dated June 18, 2001, from David Kolaz, Illinois Environmental Protection Agency, to Cheryl Newton, United States Environmental Protection Agency.

(B) Letter dated September 20, 2001, from David Kolaz, Illinois Environmental Protection Agency, to Bharat Mathur, United States Environmental Protection Agency.

(160) On March 21, 2001, Illinois submitted revisions to volatile organic compound rules for Formel Industries, Incorporated in Cook County, Illinois. The revisions consist of a January 18, 2001 Opinion and Order of the Illinois Pollution Control Board in the Matter of: Petition of Formel Industries, Inc. for an Adjusted Standard from 35 ILL. ADM. CODE 218.401(a),(b) and (c): AS 00–13 (Adjusted Standard Air). This Opinion and Order grants Formel Industries, Incorporated an adjusted standard to the Flexographic Printing Rule. The adjusted standard requirements include participation in a market-based emissions trading system, maintaining daily records, conducting trials of compliant inks, and reviewing alternate control technologies.

(i) *Incorporation by reference.* Volatile organic compound emissions limits contained in a January 18, 2001 Opinion and Order of the Illinois Pollution Control Board in the Matter of: Petition of Formel Industries, Inc. for an Adjusted Standard from 35 ILL. ADM. CODE 218.401(a), (b) and (c): AS 00–13 (Adjusted Standard-Air). This Opinion and Order was adopted by the Illinois Pollution Control Board on January 18, 2001. It became effective under State law on January 18, 2001.

(161) On March 28, 2001, Illinois submitted revisions to volatile organic compound rules for Bema Film Systems, Incorporated in DuPage County, Illinois. The revisions consist of AS 00–11, an adjusted standard to the Flexographic Printing Rule, 35 IAC 218.401 (a), (b), and (c). The adjusted standard

requirements include reducing the allotment baseline for the Illinois market-based emissions trading system, maintaining daily records, conducting trials of compliant inks, and reviewing alternate control technologies.

(i) *Incorporation by reference.* AS 00–11, an adjusted standard from the Volatile Organic Compound emission limits for Bema Film Systems, Inc. contained in Illinois Administrative Code Title 35: Environmental Regulations for the State of Illinois, Subtitle B: Air Pollution, Chapter I: Pollution Control Board, Subchapter c: Emission Standards and Limitations for Stationary Sources, Part 218.401 (a), (b), and (c). Effective on January 18, 2001.

(ii) *Other material.* (A) November 14, 2001, letter from Dennis A. Lawler, Manager, Division of Air Pollution Control, Illinois Environmental Protection Agency to Jay Bortzer, Chief, Regulation Development Section, Air and Radiation Division, USEPA, Region 5, indicating that the effective date of the adjusted standard for Bema Film Systems, Inc. AS 00–11, is January 18, 2001, the date that AS 00–11 was adopted by the Illinois Pollution Control Board.

(162) On March 28, 2001, Illinois submitted revisions to volatile organic compound rules for Vonco Products, Incorporated in Lake County, Illinois. The revisions consist of AS 00–12, an adjusted standard to the Flexographic Printing Rule, 35 IAC 218.401 (a), (b), and (c). The adjusted standard requirements include reducing the allotment baseline for the Illinois market-based emissions trading system, maintaining daily records, conducting trials of compliant inks, and reviewing alternate control technologies.

(i) *Incorporation by reference.* AS 00–12, an adjusted standard from the Volatile Organic Compound emission limits applicable to Vonco Products, Inc. contained in Illinois Administrative Code Title 35: Environmental Regulations for the State of Illinois, Subtitle B: Air Pollution, Chapter I: Pollution Control Board, Subchapter c: Emission Standards and Limitations for Stationary Sources, Part 218.401 (a), (b), and (c). Effective on January 18, 2001.

(ii) *Other material.* (A) November 14, 2001, letter from Dennis A. Lawler, Manager, Division of Air Pollution Control, Illinois Environmental Protection Agency to Jay Bortzer, Chief, Regulation Development Section, Air and Radiation Division, USEPA, Region 5, indicating that the effective date of the adjusted standard for Vonco Products, Inc. AS 00–12, is January 18, 2001, the date that AS 00–12 was adopted by the Illinois Pollution Control Board.

(163) [Reserved]

(164) On October 9, 2001, the State of Illinois submitted new rules regarding emission tests.

(i) *Incorporation by reference.* (A) New rules of 35 Ill. Admin. Code Part 283, including sections 283.110, 283.120, 283.130, 283.210, 283.220, 283.230, 283.240, and 283.250, effective September 11, 2000, published in the Illinois Register at 24 Ill. Reg. 14428.

(B) Revised section 283.120 of 35 Ill. Admin. Code, correcting two typographical errors, effective September 11, 2000, published in the Illinois Register at 25 Ill. Reg. 9657.

(165) On April 8, 1999, the Illinois Environmental Protection Agency submitted revisions to particulate matter control requirements for rural grain elevators in Illinois. The revised requirements exempt rural grain elevators from certain particulate matter control requirements.

(i) *Incorporation by reference.* Revised grain elevator provisions in Section 9(f) of the Illinois Environmental Protection Act. Adopted by both Houses of the Illinois General Assembly as Public Act 89–491 (previously Senate Bill 1633) on April 25, 1996, approved by the Governor of Illinois on May 23, 1996, effective June 21, 1996.

(166) On November 6, 2001, the State of Illinois submitted revisions to its emission reporting rules, restructuring these rules and adding hazardous air pollutant emission reporting for sources in Illinois' Emission Reduction Market System.

(i) *Incorporation by reference.* (A) Revised rules of 35 Ill. Admin. Code Part 254, including new or amended sections 254.101, 254.102, 254.103, 254.120, 254.132, 254.134, 254.135, 254.136, 254.137, 254.138, 254.203, 254.204, 254.303, 254.306, and 254.501, effective July 17, 2001, retention of section 254.133, and the repeal of

other previously approved sections of 35 Ill. Admin. Code 254. Amended or adopted at 25 Ill. Reg. 9856. Effective July 17, 2001.

(167) On August 31, 1998, Illinois submitted revisions to its major stationary sources construction and modification rules (NSR Rules) as a State Implementation Plan revision request. These revisions apply only in areas in Illinois that have been designated as being in serious or severe nonattainment with the national ambient air quality standards for ozone.

(i) *Incorporation by reference.* Illinois Administrative Code, Title 35: Environmental Protection, Subtitle B: Air Pollution, Chapter I: Pollution Control Board, Subchapter A: Permits and General Provisions, Part 203 Major Stationary Sources Construction and Modification, Subpart B: Major Stationary Sources in Nonattainment Areas, Section 203.206 Major Stationary Source and Section 203.207 Major Modification of a Source; and, Subpart C: Requirements for Major Stationary Sources in Nonattainment Areas, Section 203.301 Lowest Achievable Emissions Rate. Amended in R98–10 at 22 Ill. Reg. 5674, effective March 10, 1998.

(168) On October 31, 2003, the Illinois Environmental Protection Agency submitted revisions to the Illinois State Implementation Plan for ozone. The submittal revises the definition for volatile organic material (VOM) or volatile organic compound (VOC) contained in 35 Ill. Adm. Code 211.7150 to incorporate an exemption for perchloroethylene (tetrachloroethylene); 3,3-dichloro-1,1,1,2,2-pentafluoropropane (HCFC–225ca); 1,3-dichloro-1,1,2,2,3-pentafluoropropane (HCFC–225cb); decafluoropentane (HFC 43–10mee); difluoromethane (HFC–32); ethylfluoride (HFC–161); 1,1,1,3,3,3-hexafluoropropane (HFC–236fa); 1,1,2,2,3-pentafluoropropane (HFC–245ca); 1,1,2,3,3-pentafluoropropane (HFC–245ea); 1,1,1,2,3-pentafluoropropane (HFC–245eb); 1,1,1,3,3-pentafluoropropane (HFC–245fa); 1,1,1,2,3,3-hexafluoropropane (HFC–236ea); 1,1,1,3,3-pentafluorobutane (HFC–365mfc); chlorofluoromethane (HCFC–31); 1,2-dichloro-1,1,2-trifluoroethane (HCFC–123a); 1-chloro-1-fluoroethane (HCFC–151a); 1,1,1,2,2,3,3,4,4-nonafluoro-4-methoxybutane ($C_4F_9OCH_3$); 2-(difluoromethoxymethyl)-1,1,1,2,3,3,3-heptafluoropropane ($(CF_3)_2CFCF_2OCH_3$); 1-ethoxy-1,1,2,2,3,3,4,4,4-nonafluorobutane ($C_4F_9OC_2H_5$); 2-(ethoxydifluoromethyl)-1,1,1,2,3,3,3-heptafluoropropane ($(CF_3)_2CFCF_2OC_2H_5$); and methyl acetate from the definition of VOM or VOC and thereby, from regulation as ozone precursors.

(i) *Incorporation by reference.* (A) Illinois Administrative Code Title 35: Environmental Protection, Subtitle B: Air Pollution, Chapter 1: Pollution Control Board, Subchapter c: Emission Standards and Limitations for Stationary Sources, Part 211: Definitions and General Provisions, Subpart B: Definitions, Section 211.7150 Volatile Organic Material (VOM) or Volatile Organic Compound (VOC), amended at 22 Illinois Register 11405, effective June 22, 1998.

(169) On June 20, 2003, Illinois submitted an Adjusted Standard for Ford Motor Company's Chicago Assembly Plant. This Adjusted Standard from 35 Ill.Adm. Code 218.986 replaces those requirements with the control requirements in the Illinois Pollution Control Board's November 21, 2002, Order.

(i) *Incorporation by reference.* (A) The Illinois Pollution Control Board's November 21, 2002, Opinion and Order which granted the Ford Motor Company's Chicago Assembly Plant an adjusted standard (AS 02–3) from 35 Ill. ADM. Code 218.986. The requirements in 35 Ill. ADM. Code 218.986 have been replaced by the requirements in the Illinois Pollution Control Board's November 21, 2002, Order.

(170) On May 28, 2003, Illinois submitted an amendment to its leather coating rules for the Horween Leather Company's Chicago leather manufacturing facility. This adds a test method in Section 218.112(a)(26) and a new Section 35 Ill. Adm. Code 218.929. These amendments were incorporated in the Illinois Pollution Control Board's February 20, 2003, Final Order R02–20.

(i) *Incorporation by reference.* Illinois Administrative Code Title 35: Environmental Protection, Subtitle B: Air Pollution, Chapter I: Pollution Control

Board, Subchapter c: Emissions Standards and Limitations for Stationary Sources, Part 218 Organic Material Emission Standards and Limitations for the Chicago Area.

(A) Subpart A: General Provisions, Section 218.112 Incorporations by Reference, (a) American Society for Testing and Materials, 100 Barr Harbor Drive, West Conshohocken, PA 19428–9555, 26) ASTM D2099–00. Amended at 27 Ill. Reg. 7283, effective April 8, 2003.

(B) Subpart PP: Miscellaneous Fabricated Product Manufacturing Processes, Section 218.929 Cementable and Dress or Performance Shoe Leather. Added at 27 Ill. Reg. 7283, effective April 8, 2003.

(171) On July 29, 2003, the Illinois Environmental Protection Agency submitted a site-specific revision to the State Implementation Plan (SIP) for sulfur dioxide (SO_2) for the Central Illinois Light Company's E.D. Edwards Generating Station, now known as AmerenEnergy Resources Generating Company, Edwards Power Plant, in Bartonville, Peoria County, Illinois.

(i) Incorporation by reference.

Illinois Administrative Code Title 35: Environmental Protection, Subtitle B: Air Pollution, Chapter 1: Pollution Control Board, Subchapter c: Emissions Standards and Limitations for Stationary Sources, Part 214: Sulfur Limitations, Subpart X: Utilities Section 214.561 E.D. Edwards Electric Generating Station which was amended at 27 *Illinois Register* 12101, effective July 11, 2003.

(172) On September 19, 2003, Illinois submitted a site-specific revision to the State Implementation Plan which relaxes the volatile organic material (VOM) content limit for the coating operations at Louis Berkman Company, d/b/a/ the Swenson Spreader Company's Lindenwood, Ogle County, Illinois facility from 3.5 pounds VOM per gallon to a monthly average of 4.75 pounds VOM per gallon until May 7, 2008.

(i) *Incorporation by reference.* Order contained in a May 7, 1998, Opinion and Order of the Illinois Pollution Control Board, AS 97–5, effective May 7, 1998.

(173) On March 11, 2004, Illinois submitted an Adjusted Standard for Argonne National Laboratory's degreasing operations. Pursuant to this Adjusted Standard from 35 Ill. Adm. Code 218.182, the applicable vapor pressure and other associated requirements of 35 Ill. Code 218.182 do not apply to cold cleaning involving the preparation of sample materials and associated apparatus used for research and development testing and analysis at Argonne. These revised requirements were adopted in the Illinois Pollution Control Board's December 18, 2003, Adjusted Standard AS 03–4.

(i) *Incorporation by reference.* (A) The Illinois Pollution Control Board's December 18, 2003, Opinion and Order which granted the Argonne National Laboratory's degreasing operations an Adjusted Standard (AS 03–4) from 35 Ill. Code 218.182 for its cold cleaning involving the preparation of sample materials and associated apparatus used for research and development testing and analysis at Argonne.

(174) [Reserved]

(175) On January 4, 2006, Illinois submitted a site-specific State Implementation Plan revision for the Ford Motor Company (Ford) Chicago Assembly Plant. The revision allows Ford to discontinue use of its Stage II vapor recovery system and requires instead that Ford comply with federal onboard refueling vapor recovery regulations and other conditions.

(i) Incorporation by reference.

(A) September 1, 2005, Opinion and Order of the Illinois Pollution Control Board, AS 05–5, effective September 1, 2005.

(176) On June 14, 2004, Illinois submitted revisions to volatile organic compound rules for Formel Industries, Incorporated in Cook County, Illinois. The revisions consist of withdrawing an adjusted standard to the Flexographic Printing Rule. Formel Industries has installed a control device and is complying with the Flexographic Printing Rule.

(i) *Incorporation by reference.* An April 15, 2004, Supplemental Opinion and Order of the Illinois Pollution Control Board AS 00–13, terminating Formel's previously issued (January 18, 2001) adjusted standard from the Flexographic Printing Rule, effective April 15, 2004.

(177) On May 31, 2006, the Illinois Environmental Protection Agency submitted a requested revision to the Illinois State Implementation Plan. This revision provides additional exemptions from State of Illinois permit requirements codified by the State at Part 201 of Title 35 of the Illinois Administrative Code (35 IAC Part 201).

(i) Incorporation by reference.

Illinois Administrative Code, Title 35: Environmental Protection, Subtitle B: Air Pollution, Chapter I: Pollution Control Board, Subchapter a: Permits and General Provisions, Part 201 Permits and General Provisions, Subpart C: Prohibitions, Section 201.146 Exemptions from State Permit Requirements paragraphs (hhh), (iii), (jjj), (kkk), and (lll). Amended at 30 Ill. Reg. 4901, effective March 3, 2006.

(178) On September 14, 2007, the Illinois Environmental Protection Agency submitted rules and related material to address requirements under the Clean Air Interstate Rule. These rules mandate participation of electric generating units in EPA-run trading programs for annual emissions of sulfur dioxide, annual emissions of nitrogen oxides, and ozone season emissions of nitrogen oxides. These rules provide a methodology for allocating allowances to subject sources and require these sources to hold sufficient allowances to accommodate their emissions and to meet various monitoring, recordkeeping, and reporting requirements. EPA is approving the submitted provisions of Subparts A, C, D, and E of Part 225 of Title 35 of Illinois Administrative Code; EPA is deferring action on Subpart F.

(i) Incorporation by reference.

(A) Title 35 of the Illinois Administrative Code: Environmental Protection, Subtitle B: Air Pollution, Chapter I: Pollution Control Board, Part 225: Control of Emissions from Large Combustion Sources, effective August 31, 2007, including Subpart A: General Provisions, Subpart C: Clean Air Act Interstate Rule (CAIR) SO_2 Trading Program, Subpart D: CAIR NO_X Annual Trading Program, and Subpart E: CAIR NO_X Ozone Season Trading Program.

(179) On October 31, 2003, the Illinois Environmental Protection Agency submitted rules and related materials to address site-specific requirements for Cromwell-Phoenix, Incorporated, located in Alsip, Illinois. These rules establish an adjusted standard for the corrosion inhibiting packaging production facility of Cromwell-Phoenix, Incorporated located at this source site. These rules provide a site-specific adjusted standard for this source facility for volume 35 of the Illinois Administrative Code subpart F section 218.204(c). The adjusted standard gives the corrosion inhibiting paper coating lines at the Alsip facility an adjusted volatile organic material (volatile organic compounds) content limit for paper coatings, and places an annual limit on the volatile organic material emissions from the Alsip facility as a whole. The adjusted standard also establishes source administration and reporting requirements for Cromwell-Phoenix, Incorporated Alsip facility. EPA is approving this site-specific adjusted standard as a revision of the Illinois state implementation plan.

(i) Incorporation by reference.

(A) September 18, 2003, Opinion and Order of the Illinois Pollution Control Board, AS 03–5, effective September 18, 2003.

(180) On January 10, 2007, Illinois submitted revisions to its rules for the Emission Reduction Market System. These revisions assure that sources in the Chicago area with potential emissions of VOC between 25 and 100 tons per year will remain subject to the program, irrespective of changes in the area's ozone nonattainment classification or designation and any associated changes in whether such sources are defined to be major sources. EPA is again deferring action on section 205.150(e).

(i) Incorporation by reference.

(A) Illinois Administrative Code, Title 35: Environmental Protection, Subtitle B: Air Pollution, Chapter I: Pollution Control Board, Subchapter b: Alternative Reduction Program, Part 205 Emissions Reduction Market System, Sections:

205.120 Abbreviations and Acronyms
205.130 Definitions
205.150 Emissions Management Periods (except for 205.150(e))
205.200 Participating Source
205.205 Exempt Source
205.210 New Participating Source

205.220 Insignificant Emission Units
205.300 Seasonal Emissions Component of the Annual Emissions Report
205.310 ERMS Applications
205.315 CAAPP Permits for ERMS Sources
205.316 Federally Enforceable State Operating Permits for ERMS Sources
205.318 Certification for Exempt CAAPP Sources
205.320 Baseline Emissions
205.330 Emissions Determination Methods
205.335 Sampling, Testing, Monitoring and Recordkeeping Practices
205.337 Changes in Emissions Determination Methods and Sampling, Testing, Monitoring and Recordkeeping Practices
205.400 Seasonal Emissions Allotment
205.405 Exclusions From Further Reductions
205.410 Participating Source Shutdowns
205.500 Emissions Reduction Generator
205.510 Inter-Sector Transaction
205.610 Application for Transaction Account
205.700 Compliance Accounting
205.730 Excursion Reporting
205.750 Emergency Conditions
205.760 Market System Review Procedures

(181) On August 17, 2005 and January 29, 2008, Illinois submitted revised regulations that are consistent with 40 CFR 51.100(s)(1), as amended by 69 FR 69298. The compounds 1,1,1,2,2,3,3-heptafluoro-3-methoxypropane (n-$C_3F_7OCH_3$), 3-ethoxy 1,1,1,2,3,4,4,5,5,6,6,6-dodecafluoro-2-(trifluoromethyl)hexane (HFE-7500), 1,1,1,2,3,3,3-heptafluoropropane (HFC-227ea), and methyl formate were added to the list of negligibly reactive compounds excluded from the definition of VOM in 35 IAC 211.7150(a). Tertiary-butyl acetate is also listed in 35 IAC 211.7150(a) with a notation that it must also meet the requirements of 35 IAC 211.7150(e), which state that tertiary-butyl acetate is considered a VOC for recordkeeping, emissions reporting, modeling, and inventory requirements, but is not considered a VOC for emission limits or content requirements.

(i) *Incorporation by reference.*

(A) Illinois Administrative Code Title 35: Environmental Protection, Part 211: Definitions and General Provisions, Subpart B: Definitions, Section 211.7150: Volatile Organic Matter (VOM) or Volatile Organic Compound (VOC), Subsections 211.7150(a) and 211.7150(e). Effective January 16, 2008.

(182) On January 29, 2008, Illinois submitted revised regulations that are consistent with 40 CFR 51.100(s)(1), as amended by 72 FR 2193. The compound 1,1,1,2,2,3,4,5,5,5-decafluoro-3-methoxy-4-trifluoromethyl-pentane (HFE–7300) was added to the list of negligibly reactive compounds excluded from the definition of VOM in 35 IAC 211.7150(a).

(i) Incorporation by reference.

(A) Illinois Administrative Code Title 35: Environmental Protection, Part 211: Definitions and General Provisions, Subpart B: Definitions, Section 211.7150: Volatile Organic Matter (VOM) or Volatile Organic Compound (VOC), Subsection 211.7150(a). Effective January 16, 2008.

(183) On January 24, 2008, the Illinois Environmental Protection Agency submitted a revision to its state implementation plan for the packaging production facility of CP–D Acquisition Company, LLC. The revision changes the source name from Cromwell-Phoenix, Incorporated, to CP–D Acquisition Company, LLC.

(i) Incorporation by reference.

(A) November 20, 2003, Supplemental Opinion and Order of the Illinois Pollution Control Board, AS 03–05, effective November 20, 2003.

(184) On October 23, 2007, the Illinois Environmental Protection Agency submitted revisions to its State implementation plan for the Oxides of Nitrogen (NO_X) SIP Call Phase II. The State has submitted revisions to 35 Illinois Administrative Code (Ill. Adm. Code) Parts 211 and 217. The rules pertain to definitions and general provisions, and control of Nitrogen Oxides (NO_X), respectively. The rules satisfy the requirements of EPA's NO_X SIP Call Phase II Rule (the Phase II Rule).

(i) *Incorporation by reference.* (A) Illinois Administrative Code, Title 35: Environmental Protection, Subtitle B: Air Pollution, Chapter I: Pollution Control Board, Subchapter c: Emission Standards and Limitations for Stationary Sources, Part 211: Definitions and General Provisions, Subpart B: Definitions, Sections: 211.740 Brakehorsepower; 211.1740 Diesel Engine; 211.1920 Emergency or Standby Unit; 211.3300 Lean-burn Engine; and 211.5640 Rich-burn Engine; effective September 25, 2007. (B) Illinois Administrative Code, Title 35: Environmental Protection, Subtitle B: Air Pollution, Chapter I: Pollution Control Board,

Subchapter c: Emission Standards and Limitations for Stationary Sources, Part 217: Nitrogen Dioxide Emissions, Subpart A: General Provisions, Sections: 217.101 Measurement Methods; 217.102 Abbreviation and Units; Subpart Q: Stationary Reciprocating Internal Combustion Engines and Turbines, Sections 217.386 Applicability; 217.388 Control and Maintenance Requirements; 217.390 Emissions Averaging Plan; 217.392 Compliance; 217.394 Testing and Monitoring; 217.396 Recordkeeping and Reporting; and 217 Appendix G: Existing Reciprocating Internal Combustion Engines Affected by the NO_X SIP Call; *effective September 25, 2007*.

(ii) *Additional material*. Illinois Administrative Code, Title 35: Environmental Protection, Subtitle B: Air Pollution, Chapter I: Pollution Control Board, Subchapter c: Emission Standards and Limitations for Stationary Sources, Part 217: Nitrogen Dioxide Emissions, Subpart A: General Provisions, Section 217.104 Incorporation by Reference; effective September 25, 2007.

(185) On December 7, 2009, Illinois submitted a rule for the sunset of the provisions of 35 IAC 217 Subpart W, regulating electric generating unit participation in the NO_X Budget Trading Program, since these provisions have been superseded by provisions established pursuant to the Clean Air Interstate Rule.

(i) *Incorporation by reference*. The Illinois rule at 35 IAC 217.751, entitled ''Sunset Provisions,'' submitted on December 7, 2009, effective on November 2, 2009, is incorporated by reference.

(186) On July 17, 2009, Illinois submitted amendments to its pharmaceutical manufacturing rules for approval into its state implementation plan. These amendments consist of a site-specific rulemaking for certain of Abbott Laboratories' (Abbott) tunnel dryers and fluid bed dryers.

(i) Incorporation by reference.

(A) Illinois Administrative Code, Title 35: Environmental Protection, Subtitle B: Air Pollution, Chapter I: Pollution Control Board, Subchapter c: Emission Standards and Limitations for Stationary Sources, Part 218: Organic Material Emission Standards and Limitations for the Chicago Area, Subpart T: Pharmaceutical Manufacturing, Section: 218.480 Applicability, effective August 26, 2008.

(ii) Additional material.

(A) Letter from Laurel L. Kroack, Illinois Environmental Protection Agency, to Cheryl Newton, EPA, dated May 12, 2010, with attachments, that establishes how compliance with Abbott's 20.6 tons VOC per year limit is determined as well as Abbott's recordkeeping requirements.

(187) On October 25, 2010, Illinois submitted revised regulations that are consistent with 40 CFR 51.100(s)(1), as amended by 74 FR 3437. The compounds propylene carbonate and dimethyl were added to the list of negligibly reactive compounds excluded from the definition of VOC in 35 IAC 211.7150(a).

(i) *Incorporation by reference*. Illinois Administrative Code Title 35: Environmental Protection, Part 211: Definitions and General Provisions, Section 211.7150: Volatile Organic Matter (VOM) or Volatile Organic Compound (VOC), Subsection 211.7150(a). Effective January 11, 2010.

(188) On November 8, 2010, the Illinois Environmental Protection Agency submitted a revision to its state implementation plan. The revision to the SIP allows an adjusted standard to the general rule, Use of Organic Material Rule, known as the eight pound per hour (8 lb/hr) rule, for volatile organic matter, for Royal Fiberglass Pools, Inc. manufacturing facility located in Dix, Illinois. The adjusted standard is that 35 Ill. Adm. Code 217.301 does not apply to VOM emissions from Royal's Dix, Illinois facility. The facility is subject to emission limit requirements set forth in the MACT under 40 CFR 63 subpart WWWW finalized in 68 FR 19402, April 21, 2003.

(i) *Incorporation by reference*. (A) February 18, 2010, Opinion and Order of the Illinois Pollution Control Board, AS–09–04, effective February 18, 2010.

(189) On July 29, 2010, September 16, 2011 and September 29, 2011 Illinois submitted VOM RACT rules for the Chicago and Metro-East St. Louis 8-hour ozone nonattainment areas. These rules are consistent with the Control Technique Guideline documents issued by EPA in 2006, 2007 and 2008 and satisfy the RACT requirements of the Act.

On February 28, 2011, Illinois EPA submitted a confirmation that the sewage treatment plant exemption in Subpart TT of Parts 218 and 219 does not apply to industrial wastewater. This clarification clearly establishes that VOM emissions from major non-CTG industrial wastewater operations are regulated by Subpart TT.

(i) *Incorporation by reference.* The following sections of Illinois Administrative Code, Title 35: Environmental Protection, Subtitle B: Air Pollution, Chapter 1: Pollution Control Board, Subchapter c: Emission Standards and Limitations for Stationary Sources, are incorporated by reference:

(A) Part 211: Definitions and General Provisions, Sections 211.1000, 211.1745, 211.1878, 211.1885, 211.2359, 211.2368, 211.2615, 211.2830, 211.2840, 211.2965, 211.3215, 211.3305, 211.3555, 211.3705, 211.3707, 211.4065, 211.5335, 211.5535, 211.5585, 211.5860, 211.5875, 211.5885, 211.6405, 211.6425, 211.6535, 211.7290; effective June 25, 2010.

(B) Part 211: Definitions and General Provisions, Sections 211.101, 211.102, 211.200, 211.233, 211.235, 211.260, 211.481, 211.492, 211.540, 211.715, 211.735, 211.820, 211.825, 211.880, 211.954, 211.965, 211.1128, 211.1455, 211.1560, 211.1565, 211.1655, 211.1700, 211.1872, 211.1876, 211.1877, 211.1880, 211.1882, 211.1883, 211.2040, 211.2055, 211.2210, 211.2310, 211.2320, 211.2360, 211.2369, 211.2415, 211.2525, 211.2622, 211.2825, 211.2955, 211.2956, 211.2958, 211.2960, 211.2980, 211.3095, 211.3120, 211.3240, 211.3505, 211.3665, 211.3760, 211.3775, 211.3785, 211.3820, 211.3925, 211.3961, 211.3966, 211.3967, 211.3968, 211.3969, 211.3975, 211.4052, 211.4080, 211.4220, 211.4285, 211.4455, 211.4540, 211.4735, 211.4760, 211.4765, 211.4768, 211.4769, 211.4895, 211.4900, 211.5012, 211.5061, 211.5062, 211.5075, 211.5090, 211.5400, 211.5520, 211.5550, 211.5800, 211.5890, 211.5985, 211.5987, 211.6012, 211.6015, 211.6017, 211.6020, 211.6063, 211.6065, 211.6400, 211.6427, 211.6460, 211.6585, 211.6640, 211.6670, 211.6690, 211.6720, 211.6740, 211.6780, 211.6825, 211.6885, 211.7220, 211.7240; effective September 14, 2010.

(C) Part 211: Definitions and General Provisions, Sections 211.493, 211.2200, 211.2358, 211.2800, 211.3985, 211.4460, 211.5140, 211.6587, 211.6635; effective July 27, 2011.

(D) Part 218: Organic Material Emission Standards and Limitations for the Chicago Area, Subpart F: Coating Operations, Section 218.218; effective March 23, 2010.

(E) Part 218: Organic Material Emission Standards and Limitations for the Chicago Area, Subpart E: Solvent Cleaning, Section 218.181, Subpart H: Printing and Publishing, Sections 218.403, 218.405, 218.406, 218.407, 218.408, 218.410, 218.412, 218.413, 218.416; effective June 25, 2010.

(F) Part 218: Organic Material Emission Standards and Limitations for the Chicago Area, Subpart A: General Provisions, Sections 218.106, 218.112, Subpart F: Coating Operations, Sections 218.205, 218.208, 218.210, 218.212, 218.219, Subpart II: Fiberglass Boat Manufacturing Materials, Section 218.890, Subpart JJ: Miscellaneous Industrial Adhesives, Section 218.900; effective September 14, 2010.

(G) Part 218: Organic Material Emission Standards and Limitations for the Chicago Area, Subpart A: General Provisions, Section 218.105, Subpart E: Solvent Cleaning, Section 218.187, Subpart F: Coating Operations, Sections 218.204, 218.207, 218.211, 218.217, Subpart H: Printing and Publishing, Sections 218.401, 218.402, 218.404, 218.409, 218.411, 218.415, 218.417, Subpart II: Fiberglass Boat Manufacturing Materials, Sections 218.891, 218.892, 218.894, Subpart JJ: Miscellaneous Industrial Adhesives, Sections 218.901, 218.902, 218.903, 218.904; effective July 27, 2011.

(H) Part 219: Organic Material Emission Standards and Limitations for the Metro East Area, Subpart F: Coating Operations, Section 219.218; effective March 23, 2010.

(I) Part 219: Organic Material Emission Standards and Limitations for the Metro East Area, Subpart E: Solvent Cleaning, Section 219.181, Subpart H: Printing and Publishing, Sections 219.402, 219.403, 219.405, 219.406, 219.407, 219.408, 219.410, 219.412, 219.413, 219.416; effective June 25, 2010.

(J) Part 219: Organic Material Emission Standards and Limitations for the Metro East Area, Subpart A: General Provisions, Sections 219.106, 219.112, Subpart F: Coating Operations, Sections 219.205, 219.208, 219.210, 219.212, 219.219, Subpart II: Fiberglass Boat

Manufacturing Materials, Section 219.890, Subpart JJ: Miscellaneous Industrial Adhesives, Section 219.900; effective September 14, 2010.

(K) Part 219: Organic Material Emission Standards and Limitations for the Metro East Area, Subpart A: General Provisions, Section 219.105, Subpart E: Solvent Cleaning, Section 219.187, Subpart F: Coating Operations, Sections 219.204, 219.207, 219.211, 219.217, Subpart H: Printing and Publishing, Sections 219.401, 219.404, 219.409, 219.411, 219.415, 219.417, Subpart II: Fiberglass Boat Manufacturing Materials, Sections 219.891, 219.892, 219.894, Subpart JJ: Miscellaneous Industrial Adhesives, Sections 219.901, 219.902, 219.903, 219.904; effective July 27, 2011.

(ii) *Additional material.* On February 28, 2011, Illinois EPA submitted an email confirmation that the sewage treatment plant exemption in Subpart TT of Parts 218 and 219 does not apply to industrial wastewater.

(190) On June 10, 2011, the Illinois Environmental Protection Agency submitted a revision to its state implementation plan. The revision to the SIP allows an adjusted standard to the general rule, Use of Organic Material Rule, known as the eight pound per hour (8 lb/hr) rule, for volatile organic matter, for Leisure Properties LLC/D/B/A Crownline Boats manufacturing facility located in West Frankfort, Illinois. The adjusted standard is that the facility takes an alternative standard of the emission limit requirements set forth in the MACT under 40 CFR part 63 subpart VVVV as published in 40 CFR Part 63 (§ 63.1200 to end) revised as of July 1, 2002.

(i) Incorporation by reference.

(A) July 22, 2004, Opinion and Order of the Illinois Pollution Control Board, AS–04–01, (identified in error as July 22, 2002 in the document heading), effective July 22, 2004.

(ii) Additional material.

(A) Letter from Laurel L. Kroack, Illinois Environmental Protection Agency, to Cheryl Newton, EPA, dated September 2, 2011, identifying that due to an ownership change to Crownline Boats, the Board transferred the adjusted standard to Leisure Properties LLC D/B/A Crownline Boats, which is the successor to Crownline Boats, by Board order AS04–1, effective October 7, 2010.

(191) On September 14, 2012, Illinois submitted an amendment to its State Implementation Plan at 35 Illinois Administrative Code Part 223, which adds new consumer product categories and VOC limits for these products in Subpart B, and amends Subpart C to clarify applicability. 35 IAC Part 223 limits the amount of volatile organic compounds from consumer products and architectural and industrial maintenance coatings.

(i) Incorporation by reference.

(A) Illinois Administrative Code; Title 35: Environmental Protection; Subtitle B: Air Pollution; Chapter I: Pollution Control Board; Subchapter c: Emission Standards and Limitation for Stationary Sources; Part 223: Standards and Limitations for Organic material Emissions for Area Sources, effective May 4, 2012.

(B) Reserved.

(192) On June 24, 2011, Laurel Kroack, Illinois Environmental Protection Agency, submitted Illinois' regional haze plan to Cheryl Newton, Region 5, EPA. This plan includes a long-term strategy with emission limits for mandating emission reductions equivalent to the reductions from implementing best available retrofit technology and with emission reductions to provide Illinois' contribution toward achievement of reasonable progress goals at Class I areas affected by Illinois. The plan specifically includes regulations establishing Multi-Pollutant Standards and Combined Pollutant Standards, along with letters from the affected electric utilities establishing the applicability and enforceability of the option that includes sulfur dioxide and nitrogen oxide emission limits. The plan also includes permits establishing sulfur dioxide and nitrogen oxide emission limits for three additional electric generating plants and two consent decrees establishing sulfur dioxide and nitrogen oxide emission limits for two refineries.

(i) Incorporation by reference.

(A) The following sections of Illinois Administrative Code, Title 35: Environmental Protection, Subtitle B: Air Pollution, Chapter 1: Pollution Control

Board, Subchapter c: Emission Standards and Limitations for Stationary Sources, Part 225, Control of Emissions from Large Combustion Sources, published at 33 IL Reg 10427, effective June 26, 2009, are incorporated by reference:

(*1*) Subpart B: Control Of Mercury Emissions From Coal-Fired Electric Generating Units, Section 225.233 Multi-Pollutant Standards (MPS), only subsections (a), (b), (e), and (g), Section 225.291 Combined Pollutant Standard: Purpose, Section 225.292 Applicability of the Combined Pollutant Standard, Section 225.293 Combined Pollutant Standard: Notice of Intent, Section 225.295 Combined Pollutant Standard: Emissions standards for NO_X and SO_2, and Section 225.296 Combined Pollutant Standard: Control Technology Requirements for NO_X, SO_2, and PM Emissions, except for 225.296(d).

(*2*) Section 225.Appendix A Specified EGUs for Purposes of the CPS (Midwest Generation's Coal-Fired Boilers as of July 1, 2006).

(B) Joint Construction and Operating Permit: Application Number 09090046, Issued on June 23, 2011, to City Water, Light & Power, City of Springfield.

(C) Joint Construction and Operating Permit: Application Number 09050022, Issued on June 24, 2011, to Kincaid Generation, LLC.

(ii) Additional material.

(A) Letter from Guy Gorney, Midwest Generation to Dave Bloomberg, Illinois EPA, dated December 27, 2007, choosing to be subject to provisions of the Multi-Pollutant Standards that include emission limits for sulfur dioxide and nitrogen oxides.

(B) Letter from R. Alan Kelley, Ameren, to Jim Ross, Illinois EPA, dated December 27, 2007, choosing to be subject to provisions of the Combined Pollutant Standards that include emission limits for sulfur dioxide and nitrogen oxides.

(C) Letter from Keith A. McFarland, Dynegy, to Raymond Pilapil, Illinois EPA, dated November 26, 2007, choosing to be subject to provisions of the Combined Pollutant Standards that include emission limits for sulfur dioxide and nitrogen oxides.

(193) On June 20, 2012, Illinois submitted an Adjusted Standard for the Greif Packaging, LLC facility located at 5 S 220 Frontenac Road in Naperville, DuPage County. This adjustment to the Standard at 35 Ill. Adm. Code 218.986(a) for Greif's fiber drum manufacturing facility replaces the VOM capture and control requirements in 35 Ill. Adm. Code 218.986(a) with the control requirements in the Illinois Pollution Control Board's April 5, 2012 Order.

(i) Incorporation by reference.

(A) April 5, 2012 Opinion and Order of the Illinois Pollution Control Board (AS 2011–01), effective April 5, 2012.

(194) On November 14, 2011, the Illinois Environmental Protection Agency (Illinois EPA) submitted amendments to 35 Illinois Administrative Code 218.208 and 219.208. These sections add a ''small container exemption'' for pleasure craft surface coating operations in the Chicago and Metro-East St. Louis 8-hour ozone nonattainment areas. These exemptions are consistent with EPA volatile organic compound (VOC) reasonably available control technology (RACT) policy.

(i) Incorporation by reference. The following sections of Illinois Administrative Code, Title 35: Environmental Protection, Subtitle B: Air Pollution, Chapter 1: Pollution Control Board, Subchapter c: Emission Standards and Limitations for Stationary Sources, are incorporated by reference.

(A) Part 218: Organic Material Emission Standards and Limitations for the Chicago Area, Subpart F: Coating Operations, Section 218.208 Exemptions From Emission Limitations; effective October 25, 2011.

(B) Part 219: Organic Material Emission Standards and Limitations for the Metro East Area, Subpart F: Coating Operations, Section 219.208 Exemptions From Emission Limitations; effective October 25, 2011.

(195) On June 20, 2012, Illinois submitted an amendment to its State Implementation Plan at 35 Illinois Administrative Code part 243, which updates National Ambient Air Quality Standards for ozone, lead, and particulate matter while correcting various errors in the plan.

(i) *Incorporation by reference*. Illinois Administrative Code; Title 35: Environmental Protection; Subtitle B: Air Pollution; Chapter I: Pollution Control

Board; Subchapter l: Air Quality Standards And Episodes; Part 243: Air Quality Standards; Sections 243.101 Definitions, 243.104 Nondegradation, 243.107 Reference Conditions, 243.108 Incorporations by Reference, 243.120 PM_{10} and $PM_{2.5}$, 243.122 Sulfur Oxides (Sulfur Dioxide), 243.125 8-Hour Ozone, and 243.126 Lead; effective October 25, 2011.

(196) On April 11, 2013, Illinois submitted a revision to 35 IAC Part 254, Annual Emissions Report. The revision amends the applicability provisions as they relate to greenhouse gases.

(i) Incorporation by reference.

Illinois Administrative Code Title 35: Environmental Protection, Subtitle B: Air Pollution; Chapter II: Environmental Protection Agency; Part 254: Annual Emission Report, Section 254.102: Applicability, effective April 20, 2012.

(197) On July 3, 2013, Illinois submitted revised regulations that are consistent with 40 CFR 51.100(s)(1). The compound trans-1,3,3,3-tetraflouropropene (HFO–1234ze) was added to the list of negligibly reactive compounds excluded from the definition of ''Volatile Organic Material (VOM)'' or ''Volatile Organic Compound (VOC)'' at 35 IAC 211.7150(a).

(i) Incorporation by reference. Illinois Administrative Code Title 35: Environmental Protection; Subtitle B: Air Pollution; ChapterI: Pollution Control Board; Subchapter C: Emission Standards and Limitations for Stationary Sources; Part 211: Definitions and General Provisions, Section 211.7150: Volatile Organic Matter (VOM) or Volatile Organic Compound (VOC), Subsection 211.7150(a). Effective February 4, 2013.

(198) On January 9, 2014, Illinois submitted modifications to its Federally Enforceable State Operating Permits rules as a revision to the state implementation plan. The revision extends the maximum permit term of Federally Enforceable State Operating Permits from five years to ten years.

(i) Incorporation by reference. Illinois Administrative Code Title 35: Environmental Protection; Subtitle B: Air Pollution; Chapter I: Pollution Control Board; Subchapter a: Permits and General Provisions; Part 201: Permits and General Provisions; Subpart D: Permit Applications and Review Process; Section 201.162: Duration; Subsection 201.162(a). Effective December 1, 2010.

(199) On January 8, 2014, the Illinois Environmental Protection Agency submitted a revision to its state implementation plan. The revision to the SIP substitutes Latham Pool Products, d/b/a Viking Pools, for Royal Fiberglass Pools, Inc. as the holder of the adjusted standard to the general rule, Use of Organic Material Rule, known as the eight pound per hour (8 lb/hr) rule, for volatile organic matter that was granted to Royal Fiberglass Pools, Inc. manufacturing facility located in Dix, Illinois on February 18, 2010 by the Illinois Pollution Control Board. The adjusted standard affected by the name change provides that 35 Ill. Adm. Code 215.301 does not apply to VOM emissions from Viking Pools fiberglass pool manufacturing facility in Dix, Illinois. The facility is subject to emission limit requirements set forth in the National Emissions Standards for Hazardous Air Pollutants for Reinforced Plastic Composites Production at 40 CFR 63, subpart WWWW, April 21, 2003.

(i) Incorporation by reference.

(A) Supplemental Opinion and Order of the Illinois Pollution Control Board, AS 09–4, effective September 5, 2013.

(200) On November 29, 2012, the Illinois Environmental Protection Agency submitted a request to revise Illinois' vehicle inspection and maintenance (I/M) program to reflect changes that have been made to the program since EPA fully approved the I/M program on February 22, 1999.

(i) Incorporation by reference.

(A) Illinois Administrative Code, Title 35: Environmental Protection, Subtitle B: Air Pollution, Chapter I: Pollution Control Board, Subchapter k: Emission Standards and Limitations for Mobile Sources, Part 240 Mobile Sources. Effective February 1, 2012.

(B) Illinois Administrative Code, Title 35: Environmental Protection, Subtitle B: Air Pollution, Chapter II: Environmental Protection Agency, Part 276 Procedures to be Followed in the Performance of Inspections of Motor Vehicle Emissions. Effective January 30, 2012.

(ii) Other materials.

(A) Transmittal letter dated November 29, 2012.

(B) Vehicle Emissions Inspection Law of 2005, as amended, 625 ILCS 5/13C (Public Act 94–526 enacted on August 10, 2005; Public Act 94–848 enacted on June 9, 2006; Public Act 97–106, enacted on July 14, 2011).

(C) Listing of Chicago and Metro-East St. Louis NAA Facility Closures (July 2012).

(201) On March 19, 2013, the Illinois Environmental Protection Agency submitted a request to repeal the gasoline volatility standards at 35 Ill. Adm. Code 215.585, 218.585, and 219.585, including other related revisions to 35 Ill. Adm. Code Parts 211, 215, 218, and 219, to revise the motor vehicle refinishing equipment specifications at 35 Ill. Adm. Code 218.784 and 219.784, and to repeal the motor vehicle refinishing registration requirements at 35 Ill. Adm. Code 218.792 and 219.792.

(i) Incorporation by reference.

(A) Illinois Administrative Code, Title 35: Environmental Protection, Subtitle B: Air Pollution, Chapter I: Pollution Control Board, Subchapter c: Emission Standards and Limitations for Stationary Sources, Part 211, Definitions and General Provisions, Sections 211.101 Incorporations by Reference, 211.2870 Heavy Liquid, and 211.5510 Reid Vapor Pressure. Effective January 28, 2013.

(B) Illinois Administrative Code, Title 35: Environmental Protection, Subtitle B: Air Pollution, Chapter I: Pollution Control Board, Subchapter c: Emission Standards and Limitations for Stationary Sources, Part 215, Organic Material Emission Standards and Limitations, Sections 215.104 Definitions, and 215.105 Incorporation by Reference. Effective January 28, 2013.

(C) Illinois Administrative Code, Title 35: Environmental Protection, Subtitle B: Air Pollution, Chapter I: Pollution Control Board, Subchapter c: Emission Standards and Limitations for Stationary Sources, Part 218, Organic Material Emission Standards and Limitations for the Chicago Area, Sections 218.112 Incorporations by Reference, 218.128 Monitoring VOL Operations, and 218.784 Equipment Specifications. Effective January 28, 2013.

(D) Illinois Administrative Code, Title 35: Environmental Protection, Subtitle B: Air Pollution, Chapter I: Pollution Control Board, Subchapter c: Emission Standards and Limitations for Stationary Sources, Part 219, Organic Material Emission Standards and Limitations for the Metro East Area, Sections 219.112 Incorporations by Reference, 219.128 Monitoring VOL Operations, and 219.784 Equipment Specifications. Effective January 28, 2013.

(202) On June 10, 2014, Illinois submitted revised regulations that are consistent with 40 CFR 51.100(s)(1). The compounds (difluoromethoxy)(difluoro)methane (CHF_2OCHF_2 or HFE–134), bis(difluoromethoxy)(difluoro)methane ($CHF_2OCF_2OCHF_2$ or HFE–236cal2), 1-(difluoromethoxy)-2-[(difluoromethoxy)((difluoro)methoxy]-1,1,2,2-tetrafluoroethane ($CHF_2OCF_2OCF_2CF_2OCHF_2$ or HFE–43–10pccc), 1,2-bis(difluoromethoxy)-1,1,2,2-tetrafluoroethane ($CHF_2OCF_2CF_2OCHF_2$ or HFE–338pcc13), and *trans* 1-chloro-3,3,3-trifluoroprop-1-ene ($CF_3CHCHCl$) were added to the list of negligibly reactive compounds excluded from the definition of ''Volatile Organic Material (VOM)'' or ''Volatile Organic Compound (VOC)'' at 35 IAC 211.7150(a).

(i) *Incorporation by reference.*

Illinois Administrative Code Title 35: Environmental Protection; Subtitle B: Air Pollution; Chapter I: Pollution Control Board; Subchapter c: Emission Standards and Limitations for Stationary Sources; Part 211: Definitions and General Provisions; Subpart B: Definitions; Section 211.7150: Volatile Organic Material (VOM) or Volatile Organic Compound (VOC), effective November 27, 2013.

(203) On January 17, 2013, the Illinois Environmental Protection Agency submitted a request to phase out Stage II vapor recovery standards at 35 Ill. Adm. Code 218.586 and to make other related revisions to 35 Ill. Adm. Code Parts 201, 218, and 219.

(i) *Incorporation by reference.*

(A) Illinois Administrative Code, Title 35: Environmental Protection, Subtitle B: Air Pollution, Chapter I: Pollution Control Board, Subchapter a: Permits and General Provisions, Part

201, Permits and General Provisions, Subpart C: Prohibitions, Section 201.146, Exemptions from State Permit Requirements, and Subpart K: Records and Reports, Section 201.302, Reports, effective December 23, 2013.

(B) Illinois Administrative Code, Title 35: Environmental Protection, Subtitle B: Air Pollution, Chapter I: Pollution Control Board, Subchapter c: Emission Standards and Limitations for Stationary Sources, Part 218, Organic Material Emission Standards and Limitations for the Chicago Area, Subpart A: General Provisions, Section 218.112, Incorporations by Reference, Subpart Y: Gasoline Distribution, Section 218.583, Gasoline Dispensing Operations—Storage Tank Filling Operations and Section 218.586, Gasoline Dispensing Operations—Motor Vehicle Fueling Operations, effective December 23, 2013.

(C) Illinois Administrative Code, Title 35: Environmental Protection, Subtitle B: Air Pollution, Chapter I: Pollution Control Board, Subchapter c: Emission Standards and Limitations for Stationary Sources, Part 219, Organic Material Emission Standards and Limitations for the Metro East Area, Subpart A: General Provisions, Section 219.105, Test Methods and Procedures, and Section 219.112, Incorporations by Reference, Subpart Y: Gasoline Distribution, Section 219.583, Gasoline Dispensing Operations—Storage Tank Filling Operations, effective December 23, 2013.

(204) On December 2, 2013, Illinois submitted an amendment to its State Implementation Plan at 35 Illinois Administrative Code part 243, which updates Illinois air quality standards to reflect National Ambient Air Quality Standards for sulfur dioxide, ozone, nitrogen dioxide, lead, fine particulate matter, particulate matter, and carbon monoxide and incorporates Federal test procedures for these pollutants.

(i) *Incorporation by reference*. Illinois Administrative Code Title 35: Environmental Protection; Subtitle B: Air Pollution; Chapter I: Pollution Control Board; Subchapter l: Air Quality Standards And Episodes; Part 243: Air Quality Standards; Sections 243.101 Definitions, 243.102 Scope, 243.103 Applicability, 243.105 Air Quality Monitoring Data Influenced by Exceptional Events, 243.107 Reference Conditions, 243.108 Incorporations by Reference, 243.120 PM_{10} and $PM_{2.5}$, 243.122 Sulfur Oxides (Sulfur Dioxide), 243.123 Carbon Monoxide, 243.124 Nitrogen Oxides (Nitrogen Dioxide as Indicator), 243.125 Ozone, 243.126 Lead, and 243.TABLE A Schedule of Exceptional Event Flagging and Documentation Submission for New or Revised NAAQS, effective July 29, 2013.

(205) On May 16, 2013, and August 18, 2014, Illinois submitted variances to its regional haze state implementation plan affecting the following Midwest Generation, LLC facilities: Crawford Generating Station (Cook County), Joliet Generating Station (Will County), Powerton Generating Station (Tazewell County), Waukegan Generating Station (Lake County), and Will County Generating Station (Will County).

(i) Incorporation by Reference. (A) Illinois Pollution Control Board Order PCB 12–121, adopted on August 23, 2012; Certificate of Acceptance, dated August 24, 2012, filed with the Illinois Pollution Control Board Clerk's Office August 27, 2012.

(B) Illinois Pollution Control Board Order PCB 13–24, adopted on April 4, 2013; Certificate of Acceptance, dated May 16, 2013, filed with the Illinois Pollution Control Board Clerk's Office May 17, 2013.

(206) On December 18, 2014, the state submitted a proposed revision to the Illinois SIP updating the definition of Volatile Organic Material (VOM) or Volatile Organic Compound (VOC) to exclude the chemical compound 2,3,3,3-tetrafluoropropene (HFO–1234yf), along with minor administrative revisions.

(i) *Incorporation by reference*. Illinois Administrative Code, Title 35: Environmental Protection, Subtitle B: Air Pollution, Chapter I: Pollution Control Board, Subchapter c: Emission Standards and Limitations for Stationary Sources, Part 211: Definitions and General Provisions, Subpart B: Definitions, Section 211.7150 Volatile Organic Material (VOM) or Volatile Organic Compounds (VOC), effective June 9, 2014.

(207) On September 3, 2014, Illinois submitted a variance to its regional haze state implementation plan affecting the electrical generating units

(EGUs) included in the Ameren Multi-Pollutant Standard Group (Ameren MPS Group). The Ameren MPS Group consists of five facilities owned by Illinois Power Holdings, LLC (IPH) and two facilities owned by AmerenEnergy Medina Valley Cogen, LLC (Medina Valley). The IPH facilities included in the Ameren MPS Group and subject to the variance include: Coffeen Energy Center (Montgomery County), Duck Creek Energy Center (Fulton County), E.D. Edwards Energy Center (Peoria County), Joppa Energy Center (Massac County), and Newton Energy Center (Jasper County). The Medina Valley facilities included in the Ameren MPS Group and subject to the variance are the Meredosia Energy Center (Morgan County) and the Hutsonville Energy Center (Crawford County).

(i) *Incorporation by reference.*

(A) Illinois Pollution Control Board Order PCB 14–10, adopted on November 21, 2013; Certificate of Acceptance, filed with the Illinois Pollution Control Board Clerk's Office December 20, 2013.

(208) On December 18, 2014, and April 23, 2015, Illinois submitted amendments to its State Implementation Plan at 35 Illinois Administrative Code part 243, which updates Illinois air quality standards to reflect National Ambient Air Quality Standards promulgated by EPA through December 17, 2013, and incorporates Federal test procedures for these pollutants.

(i) *Incorporation by Reference.* (A) Illinois Administrative Code Title 35: Environmental Protection; Subtitle B: Air Pollution; Chapter I: Pollution Control Board; Subchapter I: Air Quality Standards And Episodes; Part 243: Air Quality Standards; Sections 243.107 Reference Conditions, 243.120 $p.m._{10}$ and $PM_{2.5}$, 243.122 Sulfur Oxides (Sulfur Dioxide), and 243.Table A Schedule of Exceptional Event Flagging and Documentation Submission for New or Revised NAAQS, effective November 27, 2013.

(B) Illinois Administrative Code Title 35: Environmental Protection; Subtitle B: Air Pollution; Chapter I: Pollution Control Board; Subchapter I: Air Quality Standards And Episodes; Part 243: Air Quality Standards; Section 243.108 Incorporation by Reference, effective June 9, 2014.

(209) On August 9, 2016, the state submitted a proposed revision to the Illinois SIP updating the definition of Volatile Organic Material (VOM) or Volatile Organic Compound (VOC) to exclude the chemical compound 2-amino-2-methyl-1-propanol (AMP), along with minor administrative revisions.

(i) *Incorporation by reference.* Illinois Administrative Code, Title 35: Environmental Protection, Subtitle B: Air Pollution, Chapter I: Pollution Control Board, Subchapter c: Emissions Standards and Limitations for Station Sources, Part 211: Definitions and General Provisions, Subpart B: Definitions, Section 211.7150 Volatile Organic Material (VOM) or Volatile Organic Compounds (VOC), effective March 24, 2015.

[37 FR 10862, May 31, 1972. Redesignated and amended at 82 FR 30638, June 30, 2017]

EDITORIAL NOTE: For FEDERAL REGISTER citations affecting § 52.750, see the List of CFR Sections Affected, which appears in the Finding Aids section of the printed volume and at *www.fdsys.gov.*

Subpart P—Indiana

§ 52.769 Identification of plan—conditional approval.

The plan revision commitment listed in paragraphs (a) and (b) of this section were submitted on the dates specified.

(a)–(b) [Reserved]

[60 FR 22241, 22242, May 4, 1995, as amended at 62 FR 19056, Apr. 18, 1997; 63 FR 35144, June 29, 1998]

§ 52.770 Identification of plan.

(a) *Purpose and scope.* This section sets forth the applicable State Implementation Plan (SIP) for Indiana under section 110 of the Clean Air Act, 42 U.S.C. 7401, and 40 CFR Part 51 to meet National Ambient Air Quality Standards.

(b) *Incorporation by reference.* (1) Material listed in paragraphs (c), (d), and (e) of this section with an EPA approval date prior to December 31, 2009, was approved for incorporation by reference by the Director of the Federal Register in accordance with 5 U.S.C. 552(a) and 1 CFR Part 51. Material is incorporated as it exists on the date of the approval, and notice of any change

in the material will be published in the FEDERAL REGISTER. Entries in paragraphs (c), (d), and (e) of this section with an EPA approval date after December 31, 2009, will be incorporated by reference in the next update to the SIP compilation.

(2) EPA Region 5 certifies that the rules/regulations provided by the EPA in the SIP compilation at the addresses in paragraph (b)(3) of this section are an exact duplicate of the officially promulgated State rules/regulations which have been approved as part of the SIP as of December 31, 2009.

(3) Copies of the materials incorporated by reference may be inspected at the Environmental Protection Agency, Region 5, Air Programs Branch, 77 West Jackson Boulevard, Chicago, IL 60604; the EPA, Air and Radiation Docket and Information Center, EPA Headquarters Library, Infoterra Room (Room Number 3334), EPA West Building, 1301 Constitution Ave., NW., Washington, DC 20460, and the National Archives and Records Administration. If you wish to obtain materials from a docket in the EPA Headquarters Library, please call the Office of Air and Radiation (OAR) Docket/Telephone number: (202) 566–1742. For information on the availability of this material at NARA, call 202–741–6030, or go to: *http://www.archives.gov/federal_register/code_of_federal_regulations/ibr_locations.html.*

(c) *EPA approved regulations.*

EPA-APPROVED INDIANA REGULATIONS

Indiana citation	Subject	Indiana effective date	EPA approval date	Notes
Article 1. General Provisions				
Rule 1. Provisions Applicable Throughout Title 326				
1–1–2	References to federal Act	6/24/1994	7/21/1997, 62 FR 38919..	
1–1–3	References to the Code of Federal Regulations.	12/7/2016	6/26/2017, 82 FR 28775..	
1–1–4	Severability		2/18/1982, 47 FR 6622..	
1–1–5	Savings clause		2/18/1982, 47 FR 6622..	
1–1–6	Credible evidence	3/16/2005	10/19/2005, 70 FR 60735..	
Rule 2. Definitions				
1–2–1	Applicability of definitions	9/26/1980	11/5/1981, 46 FR 54943..	
1–2–2	"Allowable emissions" defined	6/24/1994	7/21/1997, 62 FR 38919..	
1–2–3	Air pollution control equipment	9/26/1980	11/5/1981, 46 FR 54943..	
1–2–4	"Applicable state and federal regulations" defined.	6/24/1994	7/21/1997, 62 FR 38919..	
1–2–5	"Attainment area" defined	9/26/1980	11/5/1981, 46 FR 54943..	
1–2–6	"Best available control technology (BACT)" defined.	9/26/1980	11/5/1981, 46 FR 54943..	
1–2–6.5	Board	8/31/2014	12/3/2014, 79 FR 71672..	
1–2–7	"Bulk gasoline plant" defined	9/26/1980	11/5/1981, 46 FR 54943..	
1–2–8	"Bulk gasoline terminal" defined	9/26/1980	11/5/1981, 46 FR 54943..	
1–2–9	"Catalytic cracking unit" defined	9/26/1980	11/5/1981, 46 FR 54943..	
1–2–10	"Charging" defined	9/26/1980	11/5/1981, 46 FR 54943..	
1–2–11	"Charge port" defined	9/26/1980	11/5/1981, 46 FR 54943..	
1–2–12	"Clean Air Act" defined	6/24/1994	7/21/1997, 62 FR 38919..	
1–2–13	"Coal processing" defined	9/26/1980	11/5/1981, 46 FR 54943..	
1–2–14	"Coating line" defined	6/5/1991	3/6/1992, 57 FR 8082..	
1–2–16	"Coke oven battery" defined	9/26/1980	11/5/1981, 46 FR 54943..	
1–2–17	Coke Oven Topside	9/26/1980	11/5/1981, 46 FR 54943..	
1–2–18	Coke-Side	9/26/1980	11/5/1981, 46 FR 54943..	
1–2–18.5	"Cold cleaner degreaser" defined	3/1/2013	7/25/2014, 79 FR 43260..	
1–2–19	"Combustion for indirect heating" defined.	9/26/1980	11/5/1981, 46 FR 54943..	
1–2–20	Commence Construction	9/26/1980	11/5/1981, 46 FR 54943..	
1–2–21	Construction	9/26/1980	11/5/1981, 46 FR 54943..	
1–2–21.5	"Conveyorized degreaser" defined	5/18/1990	3/6/1992, 57 FR 8082..	
1–2–22	Cutback asphalt	9/26/1980	11/5/1981, 46 FR 54943..	
1–2–22.5	"Department" defined	1/21/1995	7/5/1995, 60 FR 34856..	
1–2–23	"Electric arc furnaces" defined	9/26/1980	11/5/1981, 46 FR 54943..	
1–2–23.5	"Emissions unit" defined	12/25/1998	10/23/13, 78 FR 63093.	
1–2–24	EPA	9/26/1980	11/5/1981, 46 FR 54943..	
1–2–25	Excess air	9/26/1980	11/5/1981, 46 FR 54943..	

EPA-APPROVED INDIANA REGULATIONS—Continued

Indiana citation	Subject	Indiana effective date	EPA approval date	Notes
1–2–26	Existing facility	9/26/1980	11/5/1981, 46 FR 54943..	
1–2–27	Facility	9/26/1980	11/5/1981, 46 FR 54943..	
1–2–28	Farming operation	9/26/1980	11/5/1981, 46 FR 54943..	
1–2–28.5	''Federally enforceable'' defined	1/21/1995	7/5/1995, 60 FR 34856..	
1–2–29	Flare	9/26/1980	11/5/1981, 46 FR 54943..	
1–2–29.5	''Freeboard height'' defined	5/18/1990	3/6/1992, 57 FR 8082..	
1–2–29.6	''Freeboard ratio'' defined	5/18/1990	3/6/1992, 57 FR 8082..	
1–2–30	Fugitive dust	9/26/1980	11/5/1981, 46 FR 54943..	
1–2–31	Gas collector main	9/26/1980	11/5/1981, 46 FR 54943..	
1–2–32	Gasoline	9/26/1980	11/5/1981, 46 FR 54943..	
1–2–32.1	''Gooseneck cap'' defined	6/11/1993	6/15/1995, 60 FR 31412..	
1–2–33	Governmental unit	9/26/1980	11/5/1981, 46 FR 54943..	
1–2–33.1	''Grain elevator'' defined	6/24/1994	7/21/1997, 62 FR 38919..	
1–2–33.2	''Grain terminal elevator'' defined	6/24/1994	7/21/1997, 62 FR 38919..	
1–2–34	Incinerator	9/26/1980	11/5/1981, 46 FR 54943..	
1–2–34.1	''Jumper pipe'' defined	6/11/1993	6/15/1995, 60 FR 31412..	
1–2–35	Larry car	9/26/1980	11/5/1981, 46 FR 54943..	
1–2–36	Lowest achievable emission rate	9/26/1980	11/5/1981, 46 FR 54943..	
1–2–37	Luting material	9/26/1980	11/5/1981, 46 FR 54943..	
1–2–38	Major facility	9/26/1980	11/5/1981, 46 FR 54943..	
1–2–39	Malfunction	9/26/1980	11/5/1981, 46 FR 54943..	
1–2–40	Material	9/26/1980	11/5/1981, 46 FR 54943..	
1–2–41	Military specifications	9/26/1980	11/5/1981, 46 FR 54943..	
1–2–42	Modification	9/26/1980	11/5/1981, 46 FR 54943..	
1–2–43	Natural growth	9/26/1980	11/5/1981, 46 FR 54943..	
1–2–44	Necessary preconstruction approvals for permits.	9/26/1980	11/5/1981, 46 FR 54943..	
1–2–45	New facility	9/26/1980	11/5/1981, 46 FR 54943..	
1–2–46	Nonattainment areas	9/26/1980	11/5/1981, 46 FR 54943..	
1–2–47	''Noncombustible container'' defined	9/26/1980	11/5/1981, 46 FR 54943..	
1–2–48	''Nonphotochemically reactive hydrocarbons'' or ''negligibly photochemically reactive compounds'' defined.	10/31/2010	5/13/2011, 76 FR 27904..	
1–2–49	Offtake piping	9/26/1980	11/5/1981, 46 FR 54943..	
1–2–49.5	''Open top vapor degreaser'' defined	5/18/1990	3/6/1992, 57 FR 8082..	
1–2–50	Oven door	9/26/1980	11/5/1981, 46 FR 54943..	
1–2–51	''Owner or operator'' defined	9/26/1980	11/5/1981, 46 FR 54943..	
1–2–52	''Particulate matter'' defined	1/19/2005	10/19/2005, 70 FR 60735..	
1–2–52.2	''PM2.5'' defined	1/19/2005	10/19/2005, 70 FR 60735..	
1–2–52.4	''PM10'' defined	1/19/2005	10/19/2005, 70 FR 60735..	
1–2–54	Positive net air quality benefit	9/26/1980	11/5/1981, 46 FR 54943..	
1–2–55	Potential emissions	9/26/1980	11/5/1981, 46 FR 54943..	
1–2–56	Pre-carbonization	9/26/1980	11/5/1981, 46 FR 54943..	
1–2–57	Primary chamber	9/26/1980	11/5/1981, 46 FR 54943..	
1–2–58	Process	9/26/1980	11/5/1981, 46 FR 54943..	
1–2–59	Process weight; weight rate	9/26/1980	11/5/1981, 46 FR 54943..	
1–2–60	Pushing	9/26/1980	11/5/1981, 46 FR 54943..	
1–2–61	''Push-side'' defined	9/26/1980	11/5/1981, 46 FR 54943..	
1–2–62	''Qualified observer'' defined	9/26/1980	11/5/1981, 46 FR 54943..	
1–2–62.1	''Quench car'' defined	6/11/1993	6/15/1995, 60 FR 31412..	
1–2–63	Quenching	9/26/1980	11/5/1981, 46 FR 54943..	
1–2–63.1	''Quench reservoir'' defined	6/11/1993	6/15/1995, 60 FR 31412..	
1–2–63.2	''Quench tower'' defined	6/11/1993	6/15/1995, 60 FR 31412..	
1–2–64	Reasonable further progress	9/26/1980	11/5/1981, 46 FR 54943..	
1–2–64.1	''Reasonably available control technology'' or ''RACT'' defined.	1/21/1995	7/5/1995, 60 FR 34856..	
1–2–65	Reconstruction	9/26/1980	11/5/1981, 46 FR 54943..	
1–2–66	Regulated pollutant	9/26/1980	11/5/1981, 46 FR 54943..	
1–2–67	Reid vapor pressure	9/26/1980	11/5/1981, 46 FR 54943..	
1–2–68	Related facilities	9/26/1980	11/5/1981, 46 FR 54943..	
1–2–69	Respirable dust	9/26/1980	11/5/1981, 46 FR 54943..	
1–2–70	''Secondary chamber'' defined	9/26/1980	11/5/1981, 46 FR 54943..	
1–2–71	''Shutdown condition'' defined	9/26/1980	11/5/1981, 46 FR 54943..	
1–2–72	''Solvent'' defined	9/26/1980	11/5/1981, 46 FR 54943..	
1–2–73	''Source'' defined	9/26/1980	11/5/1981, 46 FR 54943..	
1–2–74	''Stack'' defined	9/26/1980	11/5/1981, 46 FR 54943..	
1–2–75	''Standard conditions'' defined	9/26/1980	11/5/1981, 46 FR 54943..	
1–2–76	''Startup condition'' defined	9/26/1980	11/5/1981, 46 FR 54943..	
1–2–77	''Standpipe lid'' defined	9/26/1980	11/5/1981, 46 FR 54943..	

EPA-APPROVED INDIANA REGULATIONS—Continued

Indiana citation	Subject	Indiana effective date	EPA approval date	Notes
1–2–80	"Tank wagon" defined	9/26/1980	11/5/1981, 46 FR 54943..	
1–2–81	"Temporary emissions" defined	9/26/1980	11/5/1981, 46 FR 54943..	
1–2–82	"Theoretical air" defined	9/26/1980	11/5/1981, 46 FR 54943..	
1–2–82.5	"Total suspended particulate" or "TSP" defined.	1/19/2005	10/19/2005, 70 FR 60735..	
1–2–83	"Transfer efficiency" defined	9/26/1980	11/5/1981, 46 FR 54943..	
1–2–84	"Transport" defined	9/26/1980	11/5/1981, 46 FR 54943..	
1–2–85	"True vapor pressure" defined	9/26/1980	11/5/1981, 46 FR 54943..	
1–2–86	"Unclassifiable (unclassified) areas" defined.	9/26/1980	11/5/1981, 46 FR 54943..	
1–2–87	"Underfire" defined	9/26/1980	11/5/1981, 46 FR 54943..	
1–2–88	"Vapor balance system" defined	9/26/1980	11/5/1981, 46 FR 54943..	
1–2–89	"Vapor control system" defined	9/26/1980	11/5/1981, 46 FR 54943..	
1–2–90	"Volatile organic compound" or "VOC" defined.	5/26/2007	3/18/2008, 73 FR 14389..	
1–2–91	"Wood products" defined	9/26/1980	11/5/1981, 46 FR 54943..	
Rule 3. Ambient Air Quality Standards				
1–3–1	Applicability		11/27/1981, 46 FR 57895..	
1–3–2	Sampling Methods and Analysis		11/27/1981, 46 FR 57895..	
1–3–3	Quality assurance guidelines		11/27/1981, 46 FR 57895..	
1–3–4	Ambient air quality standards	8/7/2014	12/18/2014, 79 FR 75433..	
Rule 4. Attainment Status Designations				
1–4–1	Definitions	1/18/2013	4/19/2013, 78 FR 23492.	
Rule 5. Episode Alert Levels				
1–5–1	Air Pollution Forecast		5/31/1972, 37 FR 10842..	
1–5–2	Air Pollution Alert		5/31/1972, 37 FR 10842..	
1–5–3	Air Pollution Warning		5/31/1972, 37 FR 10842..	
1–5–4	Air Pollution Emergency		5/31/1972, 37 FR 10842..	
1–5–5	Termination		5/31/1972, 37 FR 10842..	
Rule 6. Malfunctions				
1–6–1	Applicability	6/24/1994	7/21/1997, 62 FR 38919..	
1–6–2	Records; notice of malfunction	3/15/1984	5/3/1990, 55 FR 18604..	
1–6–3	Preventive maintenance plans	3/15/1984	5/3/1990, 55 FR 18604..	
1–6–4	Conditions under which malfunction not considered violation.	3/15/1984	5/3/1990, 55 FR 18604..	
1–6–5	Excessive malfunctions; department actions.	3/15/1984	5/3/1990, 55 FR 18604..	
1–6–6	Malfunction emission reduction program.	3/15/1984	5/3/1990, 55 FR 18604..	
Rule 7. Stack Height Provisions				
1–7–1	Applicability	8/27/1980	3/12/1982, 47 FR 10824..	
1–7–3	Actual stack height provisions	8/27/1980	3/12/1982, 47 FR 10824..	
1–7–5	Exemptions; limitations	8/27/1980	3/12/1982, 47 FR 10824..	
Article 2. Permit Review Rules				
Rule 1.1. General Provisions				
2–1.1–1	Definitions	7/11/12	10/29/12, 77 FR 65478	(2) and (10) only.
2–1.1–6	Public notice	6/26/1999	6/27/2003, 68 FR 38197.	
2–1.1–7	Fees	9/10/2004	6/18/2007, 72 FR 33395.	
2–1.1–8	Time periods for determination on permit applications.	6/26/1999	6/27/2003, 68 FR 38197.	
2–1.1–9.5	General provisions; term of permit	12/16/2007	10/6/2009, 74 FR 51240.	

EPA-APPROVED INDIANA REGULATIONS—Continued

Indiana citation	Subject	Indiana effective date	EPA approval date	Notes
Rule 2. Prevention of Significant Deterioration (PSD) Requirements				
2–2–1	Definitions	3/16/2011	9/28/2011, 76 FR 59899	(a) through (e), (f)(2) through (f)(3), (g) through (cc), (dd)(2) through (dd)(3), (ee)(1) through (ee)(2), (ff)(1) through (ff)(6), (gg)(1)(A) through (gg)(1)(B), (gg)(2) through (gg)(3), (hh) through (rr), (ss)(2) through (ss)(6), (tt) through (vv), (ww)(1)(A) through (ww)(1)(E), (ww)(1)(G) through (ww)(1)(W), (ww)(2), (xx) through (aaa).
2–2–1	Definitions	7/11/2012	10/29/2012, 77 FR 65478	(dd)(1), (ff)(7), (ss)(1), (ww)(1)(F) and (ww)(1)(G) only.
2–2–1	Definitions	7/11/2012	7/2/2014, 79 FR 37646	(f)(1), (ee)(3), and (gg)(1)(C) only.
2–2–2	Applicability	10/31/2010	7/8/2011, 76 FR 40242.	
2–2–3	Control technology review; requirements.	9/10/2004	6/18/2007, 72 FR 33395.	
2–2–4	Air quality analysis; requirements	3/16/2011	9/28/2011, 76 FR 59899	(a), (b)(1), (b)(2)(A)(i) through (b)(2)(A)(iv), (b)(2)(A)(vi) through (b)(2)(A)(xiii), (b)(2)(B), (b)(3), (c)(1) through (c)(3), (c)(5) through (c)(7).
2–2–4	Air quality analysis; requirements	7/11/2012	10/29/2012, 77 FR 65478	(b)(2)(A)(vi) only.
2–2–4	Air quality analysis; requirements	7/11/2012	7/2/2014, 79 FR 37646	(c)(4) only.
2–2–5	Air quality impact; requirements	10/31/2010	7/8/2011, 76 FR 40242.	
2–2–6	Increment consumption; requirements.	7/11/2012	8/11/2014, 79 FR 46710	(b) only
2–2–8	Source obligation	10/31/2010	7/8/2011, 76 FR 40242.	
2–2–10	Source information	10/31/2010	7/8/2011, 76 FR 40242.	
2–2–11	Stack height provisions	4/22/2001	6/27/2003, 68 FR 38197.	
2–2–12	Permit rescission	4/8/2004	5/20/2004, 69 FR 29071.	
2–2–13	Area designation and redesignation	4/22/2001	6/27/2003, 68 FR 38197.	
2–2–14	Sources impacting federal Class I areas: additional requirements.	7/11/2012	7/2/2014, 79 FR 37646.	
2–2–15	Public participation	4/22/2001	6/27/2003, 68 FR 38197.	
2–2–16	Ambient air ceilings	4/22/2001	6/27/2003, 68 FR 38197.	
Rule 3. Emission Offset				
2–3–1	Definitions	10/31/2010	7/8/2011, 76 FR 40242.	
2–3–2	Applicability	10/31/2010	7/8/2011, 76 FR 40242.	
2–3–3	Applicable requirements	10/31/2010	7/8/2011, 76 FR 40242.	
2–3–4	Banking of emission offsets	12/13/1993	10/7/1994, 59 FR 51108.	
2–3–5	Location of offsetting emissions	12/13/1993	10/7/1994, 59 FR 51108.	
Rule 3.4. Actuals Plantwide Applicability Limitations in Nonattainment Areas				
2–3.4–1	Applicability	9/10/2004	6/18/2007, 72 FR 33395.	
2–3.4–2	Definitions	9/10/2004	6/18/2007, 72 FR 33395.	
2–3.4–3	Permit application requirements	9/10/2004	6/18/2007, 72 FR 33395.	
2–3.4–4	Establishing PALs; general requirements.	9/10/2004	6/18/2007, 72 FR 33395.	
2–3.4–5	Public participation requirements for PALs.	9/10/2004	6/18/2007, 72 FR 33395.	
2–3.4–6	Establishing a 10 year actuals PAL level.	9/10/2004	6/18/2007, 72 FR 33395.	
2–3.4–7	Contents of the PAL permit	9/10/2004	6/18/2007, 72 FR 33395.	
2–3.4–8	PAL effective period and reopening of the PAL permit.	9/10/2004	6/18/2007, 72 FR 33395.	

EPA-APPROVED INDIANA REGULATIONS—Continued

Indiana citation	Subject	Indiana effective date	EPA approval date	Notes
2–3.4–9	Expiration of a PAL	9/10/2004	6/18/2007, 72 FR 33395.	
2–3.4–10	Renewal of a PAL	9/10/2004	6/18/2007, 72 FR 33395.	
2–3.4–11	Increasing a PAL during the PAL effective period.	9/10/2004	6/18/2007, 72 FR 33395.	
2–3.4–12	Monitoring requirements for PALs	9/10/2004	6/18/2007, 72 FR 33395.	
2–3.4–13	Record keeping requirements	9/10/2004	6/18/2007, 72 FR 33395.	
2–3.4–14	Reporting and notification requirements.	9/10/2004	6/18/2007, 72 FR 33395.	
2–3.4–15	Termination and revocation of a PAL	9/10/2004	6/18/2007, 72 FR 33395.	
Rule 5.1. Construction of New Sources				
2–5.1–4	Transition procedures	9/10/2004	6/18/2007, 72 FR 33395.	
Rule 6. Emission Reporting				
2–6–1	Applicability	11/20/2016	4/7/2017, 82 FR 16926.	
2–6–2	Definitions	3/27/2004	10/29/2004, 69 FR 63069.	
2–6–3	Compliance schedule	8/13/2006	3/29/2007, 72 FR 14678.	
2–6–4	Requirements	8/13/2006	3/29/2007, 72 FR 14678.	
2–6–5	Additional information requests	3/27/2004	10/29/2004, 69 FR 63069.	
Rule 7. Part 70 Permit Program				
2–7–10.5	Part 70 permits; source modifications	10/26/2013	3/16/2015, 80 FR 13494	Indiana made typographical corrections to (f)(2)(C) on 1/11/2014.
Rule 8. Federally Enforceable State Operating Permit Program				
2–8–1	Definitions	6/24/1994	8/18/1995, 60 FR 43008.	
2–8–2	Applicability	6/24/1994	8/18/1995, 60 FR 43008.	
2–8–3	Permit application	6/24/1994	8/18/1995, 60 FR 43008.	
2–8–4	Permit content	12/16/2007	10/6/2009, 74 FR 51240.	
2–8–5	Compliance requirements for FESOPs.	6/24/1994	8/18/1995, 60 FR 43008.	
2–8–6	Federally enforceable requirements	6/24/1994	8/18/1995, 60 FR 43008.	
2–8–7	Permit issuance, renewal, and revisions.	6/24/1994	8/18/1995, 60 FR 43008.	
2–8–8	Permit reopening	6/24/1994	8/18/1995, 60 FR 43008.	
2–8–9	Permit expiration	6/24/1994	8/18/1995, 60 FR 43008.	
2–8–10	Administrative permit amendments	6/24/1994	8/18/1995, 60 FR 43008.	
2–8–11	Permit modification (Repealed)	6/24/1994	8/18/1995, 60 FR 43008.	
2–8–11.1	Permit revisions	10/26/2013	3/16/2015, 80 FR 13494	Indiana made typographical corrections to (d)(4) on 1/11/2014.
2–8–12	Emergency provision	6/24/1994	8/18/1995, 60 FR 43008.	
2–8–13	Public notice	6/24/1994	8/18/1995, 60 FR 43008.	
2–8–14	Review by U.S. EPA	6/24/1994	8/18/1995, 60 FR 43008.	
2–8–15	Operational flexibility	6/24/1994	8/18/1995, 60 FR 43008.	
2–8–16	Fees	6/24/1994	8/18/1995, 60 FR 43008.	
2–8–17	Local agencies	6/24/1994	8/18/1995, 60 FR 43008.	
Rule 9. Source Specific Operating Agreement Program				
2–9–1	General provisions	6/24/1994	4/2/1996, 61 FR 14487.	
2–9–2	Source specific restrictions and conditions (Repealed).	6/24/1994	4/2/1996, 61 FR 14487	Sec. 2(a), 2(b), and 2(e)
Article 3. Monitoring Requirements				
Rule 1. Continuous Monitoring of Emissions				
3–1–1	Applicability		9/4/1981, 46 FR 44448.	
Rule 2.1. Source Sampling Procedures				
3–2.1–5	Specific Testing Procedures	7/15/1995	4/9/1996, 61 FR 15704.	

EPA-APPROVED INDIANA REGULATIONS—Continued

Indiana citation	Subject	Indiana effective date	EPA approval date	Notes
	Rule 4. General Provisions			
3–4–1	Definitions	9/10/2011	10/23/2013, 78 FR 63093.	
3–4–2	Certification	9/10/2011	10/23/2013, 78 FR 63093.	
3–4–3	Conversion factors	9/10/2011		
	Rule 5. Continuous Monitoring of Emissions			
3–5–1	Applicability; continuous monitoring requirements for applicable pollutants.	1/15/2014	4/17/2015, 80 FR 21174.	
3–5–2	Minimum performance and operating specifications.	9/10/2011	10/23/2013, 78 FR 63093.	
3–5–3	Monitor system certification	9/10/2011	10/23/2013, 78 FR 63093.	
3–5–4	Standard operating procedures	9/10/2011	10/23/2013, 78 FR 63093.	
3–5–5	Quality assurance requirements	9/10/2011	10/23/2013, 78 FR 63093.	
3–5–6	Recordkeeping requirements	9/10/2011	10/23/2013, 78 FR 63093.	
3–5–7	Reporting requirements	9/10/2011	10/23/2013, 78 FR 63093.	
3–5–8	Operation and maintenance of continuous emission monitoring and continuous opacity monitoring systems.	9/10/2011	10/23/2013, 78 FR 63093.	
	Rule 6. Source Sampling Procedures			
3–6–1	Applicability; test procedures	9/10/2011	10/23/2013, 78 FR 63093.	
3–6–2	Source sampling protocols	9/10/2011	10/23/2013, 78 FR 63093.	
3–6–3	Emission testing	9/10/2011	10/23/2013, 78 FR 63093.	
3–6–4	Reporting	9/10/2011	10/23/2013, 78 FR 63093.	
3–6–5	Specific testing procedures; particulate matter; PM_{10}; $PM_{2.5}$; sulfur dioxide; nitrogen oxides; volatile organic compounds.	9/10/2011	10/23/2013, 78 FR 63093.	
	Rule 7. Fuel Sampling and Analysis Procedures			
3–7–1	Applicability	9/10/2011	10/23/2013, 78 FR 63093.	
3–7–2	Coal sampling and analysis methods	9/10/2011	10/23/2013, 78 FR 63093.	
3–7–3	Alternate coal sampling and analysis methods.	9/10/2011	10/23/2013, 78 FR 63093.	
3–7–4	Fuel oil sampling; analysis methods	9/10/2011	10/23/2013, 78 FR 63093.	
3–7–5	Recordkeeping requirements; standard operating procedures.	9/10/2011	10/23/2013, 78 FR 63093.	
	Article 4. Burning Regulations			
	Rule 1. Open Burning [1]			
4–1–0.5	Definitions	2/10/2001	12/9/2014, 79 FR 72979.	
4–1–1	Scope	2/10/2001	12/9/2014, 79 FR 72979.	
4–1–2	Prohibition against open burning	2/10/2001	12/9/2014, 79 FR 72979.	
4–1–3	Exemptions	10/28/2011	12/9/2014, 79 FR 72979.	
4–1–4	Emergency burning	10/28/2011	12/9/2014, 79 FR 72979.	
4–1–4.1	Open burning approval; criteria and conditions.	12/15/2002	12/9/2014, 79 FR 72979.	
4–1–4.2	Open burning; approval revocation	2/10/2001	12/9/2014, 79 FR 72979.	
4–1–4.3	Open burning approval; delegation of authority.	2/10/2001	12/9/2014, 79 FR 72979.	
	Rule 2. Incinerators			
4–2–1	Applicability	12/15/2002	11/30/2004, 69 FR 69531.	
4–2–2	Incinerators	12/15/2002	11/30/2004, 69 FR 69531.	
4–2–3	Portable incinerators (Repealed)	12/15/2002	11/30/2004, 69 FR 69531.	
	Article 5. Opacity Regulations			
	Rule 1. Opacity Limitations			
5–1–1	Applicability	11/8/1998	7/16/2002, 67 FR 46589.	
5–1–2	Opacity limitations	11/8/1998	7/16/2002, 67 FR 46589.	

EPA-APPROVED INDIANA REGULATIONS—Continued

Indiana citation	Subject	Indiana effective date	EPA approval date	Notes
5–1–3	Temporary alternative opacity limitations.	11/8/1998	7/16/2002, 67 FR 46589.	
5–1–4	Compliance determination	6/11/1993	6/15/1995, 60 FR 31412	Sec. 4(a).
		11/8/1998	7/16/2002, 67 FR 46589	Sec. 4(b).
5–1–5	Violations	6/11/1993	6/15/1995, 60 FR 31412	(a) and (c).
5–1–5	Violations	11/8/1998	7/16/2002, 67 FR 46589	(b)(1)(A) through (b)(1)(D), (b)(1)(F) through (b)(1)(I), (b)(2) through (b)(11).
5–1–5	Violations	7/11/2012	7/2/2014, 79 FR 37646	(b)(1)(E) only.
5–1–7	State implementation plan revisions	6/11/1993	6/15/1995, 60 FR 31412.	
5–1–8	Site-specific temporary alternate opacity limitations.	12/6/2014	9/30/2016, 81 FR 67186.	
Article 6. Particulate Rules				
Rule 2. Particulate Emission Limitations for Sources of Indirect Heating				
6–2–1	Applicability	10/21/1983	5/17/1985, 50 FR 20569.	
6–2–2	Emission limitations for facilities specified in 326 IAC 6–2–1(b).	10/21/1983	5/17/1985, 50 FR 20569.	
6–2–3	Emission limitations for facilities specified in 326 IAC 6–2–1(c).	10/21/1983	5/17/1985, 50 FR 20569.	
6–2–4	Emission limitations for facilities specified in 326 IAC 6–2–1(d).	10/21/1983	5/17/1985, 50 FR 20569.	
Rule 3. Particulate Emission Limitations for Manufacturing Processes				
6–3–1	Applicability	6/12/2002	7/25/2005, 70 FR 42495	Sec. 1.(a) and (b).
		4/20/2012	6/17/2014, 79 FR 34435	only Sec. 1. (c).
6–3–1.5	Definitions	6/12/2002	7/25/2005, 70 FR 42495.	
6–3–2	Particulate emission limitations, work practices, and control technologies.	6/12/2002	7/25/2005, 70 FR 42495.	
Rule 4. Fugitive Dust Emissions				
6–4–1	Applicability of rule	11/16/1973	10/28/1975, 40 FR 50032	Approved as APC–20 Sec. 1. Definitions.
6–4–2	Emission limitations	11/16/1973	10/28/1975, 40 FR 50032	Approved as APC–20 Sec. 2. Allowable Emissions.
6–4–3	Multiple sources of fugitive dust	11/16/1973	10/28/1975, 40 FR 50032	Approved as APC–20 Sec. 3. Applicability.
6–4–4	Motor vehicle fugitive dust sources	11/16/1973	10/28/1975, 40 FR 50032	Approved as APC–20 Sec. 4. Mobile Fugitive Dust Sources.
6–4–5	Measurement processes	11/16/1973	10/28/1975, 40 FR 50032	Approved as APC–20 Sec. 5. Methods of Measurement.
6–4–6	Exceptions	11/16/1973	10/28/1975, 40 FR 50032	Approved as APC–20 Sec. 6.
6–4–7	Compliance date	11/16/1973	10/28/1975, 40 FR 50032	Approved as APC–20 Sec. 3(e).
Rule 7. Particulate Matter Emission Limitations for Southern Indiana Gas and Electric Company				
6–7–1	Southern Indiana Gas and Electric Company (SIGECO).	8/30/2008	11/10/2009, 74 FR 57904.	
Article 6.5. Particulate Matter Limitations Except Lake County				
Rule 1. General Provisions				
6.5–1–1	Applicability	4/20/2012	6/17/2014, 79 FR 34435.	
6.5–1–1.5	Definitions	9/9/2005	3/22/2006, 71 FR 14383.	
6.5–1–2	Particulate emission limitations; modification by commissioner.	4/20/2012	6/17/2014, 79 FR 34435.	
6.5–1–3	Nonattainment area particulate limitations; compliance determination.	9/9/2005	3/22/2006, 71 FR 14383.	
6.5–1–4	Compliance schedules	9/9/2005	3/22/2006, 71 FR 14383.	

EPA-APPROVED INDIANA REGULATIONS—Continued

Indiana citation	Subject	Indiana effective date	EPA approval date	Notes
6.5–1–5	Control strategies	4/20/2012	6/17/2014, 79 FR 34435.	
6.5–1–6	State implementation plan revisions	4/20/2012	6/17/2014, 79 FR 34435.	
6.5–1–7	Scope; affected counties	9/9/2005	3/22/2006, 71 FR 14383.	
Rule 2. Clark County				
6.5–2–1	General provisions	2/22/2008	4/30/2008, 73 FR 23356.	
6.5–2–4	ESSROC Cement Corporation	2/22/2008	4/30/2008, 73 FR 23356.	
6.5–2–8	Kimball Office-Borden	2/22/2008	4/30/2008, 73 FR 23356.	
6.5–2–9	PQ Corporation	2/22/2008	4/30/2008, 73 FR 23356.	
Rule 3. Dearborn County				
6.5–3–1	General provisions	2/22/2008	4/30/2008, 73 FR 23356.	
6.5–3–2	Anchor Glass Container Corporation	2/22/2008	4/30/2008, 73 FR 23356.	
6.5–3–3	Dearborn Ready Mix, LLC	2/22/2008	4/30/2008, 73 FR 23356.	
6.5–3–4	Indiana Michigan Power, Tanners Creek Plant.	2/22/2008	4/30/2008, 73 FR 23356.	
6.5–3–5	Laughery Gravel	2/22/2008	4/30/2008, 73 FR 23356.	
Rule 4. Dubois County				
6.5–4–1	General provisions	2/22/2008	4/30/2008, 73 FR 23356.	
6.5–4–2	Kimball Office—Jasper 15th Street	5/29/2015	2/22/2016, 81 FR 8650.	
6.5–4–3	Jasper Seating Co., Inc., Plant No. 3	2/22/2008	4/30/2008, 73 FR 23356.	
6.5–4–4	DMI Furniture Plant No. 5	5/29/2015	2/22/2016, 81 FR 8650.	
6.5–4–5	Dubois County Farm Bureau Co-op	2/22/2008	4/30/2008, 73 FR 23356.	
6.5–4–6	Forest Products No. 1	2/22/2008	4/30/2008, 73 FR 23356.	
6.5–4–9	Indiana Desk Company	2/22/2008	4/30/2008, 73 FR 23356.	
6.5–4–10	Indiana Dimension, Indiana Furniture Industries.	2/22/2008	4/30/2008, 73 FR 23356.	
6.5–4–11	Indiana Furniture Industries (Repealed).	2/22/2008	4/30/2008, 73 FR 23356.	
6.5–4–15	Jasper Chair Company, Inc.	2/22/2008	4/30/2008, 73 FR 23356.	
6.5–4–16	Jasper Desk Company, Incorporated	2/22/2008	4/30/2008, 73 FR 23356.	
6.5–4–17	Kimball Office—Jasper Cherry Street	5/29/2015	2/22/2016, 81 FR 8650.	
6.5–4–18	Jasper Municipal Electric Utility	2/22/2008	4/30/2008, 73 FR 23356.	
6.5–4–19	JOFCO Inc. Plants 1 and 2	2/22/2008	4/30/2008, 73 FR 23356.	
6.5–4–21	Jasper Seating	2/22/2008	4/30/2008, 73 FR 23356.	
6.5–4–24	Styline Industries, Inc. Plant #8	5/29/2015	2/22/2016, 81 FR 8650.	
Rule 5. Howard County				
6.5–5–1	General provisions	2/22/2008	4/30/2008, 73 FR 23356.	
6.5–5–2	Chrysler, LLC-Kokomo Casting Plant and Kokomo Transmission Plant.	5/29/2015	2/22/2016, 81 FR 8650.	
6.5–5–5	Delco Electronics Corporation	05/29/2015	2/22/2016, 81 FR 8650.	
6.5–5–10	Kokomo Grain Company	2/22/2008	4/30/2008, 73 FR 23356.	
6.5–5–11	E & B Paving, Inc.	2/22/2008	4/30/2008, 73 FR 23356.	
6.5–5–16	Martin Marietta Materials, Inc.	2/22/2008	4/30/2008, 73 FR 23356.	
Rule 6. Marion County				
6.5–6–1	General provisions	2/22/2008	4/30/2008, 73 FR 23356.	
6.5–6–2	Allison Transmission	5/29/2015	2/22/2016, 81 FR 8650.	
6.5–6–5	Bunge North America (East), Inc.	2/22/2008	4/30/2008, 73 FR 23356.	
6.5–6–18	Cargill, Inc.	2/22/2008	4/30/2008, 73 FR 23356.	
6.5–6–22	Indiana Veneers Corporation	2/22/2008	4/30/2008, 73 FR 23356.	
6.5–6–23	Citizens Thermal Energy C.C. Perry K.	2/22/2008	4/30/2008, 73 FR 23356.	
6.5–6–23.1	Indianapolis Power and Light Company (IPL) Harding Street Station.	2/22/2008	4/30/2008, 73 FR 23356.	
6.5–6–25	National Starch and Chemical Company.	5/29/2015	2/22/2016, 81 FR 8650.	
6.5–6–26	International Truck and Engine Corporation & Indianapolis Casting Corporation.	5/29/2015	2/22/2016, 81 FR 8650.	
6.5–6–28	Quemetco Inc. (RSR Corporation)	2/22/2008	4/30/2008, 73 FR 23356.	
6.5–6–31	Vertellus Agriculture & Nutrition Specialties LLC.	2/22/2008	4/30/2008, 73 FR 23356.	
6.5–6–33	Rolls-Royce Corporation	5/29/2015	2/22/2016, 81 FR 8650.	

EPA-APPROVED INDIANA REGULATIONS—Continued

Indiana citation	Subject	Indiana effective date	EPA approval date	Notes
6.5–6–34	St. Vincent's Hospital and Health Care Service.	2/22/2008	4/30/2008, 73 FR 23356.	
6.5–6–35	Belmont Waste Water Sludge Incinerator.	2/22/2008	4/30/2008, 73 FR 23356.	
Rule 7. St. Joseph County				
6.5–7–1	General provisions	2/22/2008	4/30/2008, 73 FR 23356.	
6.5–7–6	Bosch Braking Systems Corporation	2/22/2008	4/30/2008, 73 FR 23356.	
6.5–7–10	RACO-Hubbell Electric Products	2/22/2008	4/30/2008, 73 FR 23356.	
6.5–7–11	Reith Riley Construction Company, Inc..	2/22/2008	4/30/2008, 73 FR 23356.	
6.5–7–13	Holy Cross Services Corporation (Saint Mary's Campus).	2/22/2008	4/30/2008, 73 FR 23356.	
6.5–7–14	Accucast Technology, LLC	2/22/2008	4/30/2008, 73 FR 23356.	
6.5–7–16	University of Notre Dame du Lac	2/22/2008	4/30/2008, 73 FR 23356.	
6.5–7–18	Walsh & Kelly, Inc.	2/22/2008	4/30/2008, 73 FR 23356.	
Rule 8. Vanderburgh County				
6.5–8–1	General provisions	2/22/2008	4/30/2008, 73 FR 23356.	
6.5–8–11	Nunn Milling Company, Inc.	2/22/2008	4/30/2008, 73 FR 23356.	
6.5–8–12	Land O' Lakes Purina Feed LLC	2/22/2008	4/30/2008, 73 FR 23356.	
6.5–8–13	Southern Indiana Gas and Electric Company, Broadway Avenue Generating Station.	2/22/2008	4/30/2008, 73 FR 23356.	
6.5–8–14	Whirlpool Corporation Highway 41 North.	2/22/2008	4/30/2008, 73 FR 23356.	
Rule 9. Vigo County				
6.5–9–1	General provisions	2/22/2008	4/30/2008, 73 FR 23356.	
6.5–9–10	S&G Excavating, Inc.	2/22/2008	4/30/2008, 73 FR 23356.	
6.5–9–11	Duke Energy Indiana, Inc.—Wabash River Generating Station.	2/22/2008	4/30/2008, 73 FR 23356.	
6.5–9–13	Sisters of Providence	2/22/2008	4/30/2008, 73 FR 23356.	
6.5–9–15	Terre Haute Grain	2/22/2008	4/30/2008, 73 FR 23356.	
6.5–9–17	Ulrich Chemical, Inc.	2/22/2008	4/30/2008, 73 FR 23356.	
Rule 10. Wayne County				
6.5–10–1	General provisions	2/22/2008	4/30/2008, 73 FR 23356.	
6.5–10–2	Barrett Paving Materials, Inc.	2/22/2008	4/30/2008, 73 FR 23356.	
6.5–10–3	Belden Wire and Cable Company	2/22/2008	4/30/2008, 73 FR 23356.	
6.5–10–5	Milestone Contractors LP (Cambridge City).	2/22/2008	4/30/2008, 73 FR 23356.	
6.5–10–9	Earlham College	2/22/2008	4/30/2008, 73 FR 23356.	
6.5–10–11	Johns Manville International, Inc.	2/22/2008	4/30/2008, 73 FR 23356.	
6.5–10–12	Joseph H. Hill Co.	2/22/2008	4/30/2008, 73 FR 23356.	
6.5–10–13	Land O' Lakes Purina Feed LLC	2/22/2008	4/30/2008, 73 FR 23356.	
6.5–10–14	Milestone Contractors Richmond	2/22/2008	4/30/2008, 73 FR 23356.	
6.5–10–15	Richmond Power & Light—Whitewater Valley Generating Station.	2/22/2008	4/30/2008, 73 FR 23356.	
6.5–10–16	Richmond State Hospital	2/22/2008	4/30/2008, 73 FR 23356.	
Article 6.8. Particulate Matter Limitations for Lake County				
Rule 1. General Provisions				
6.8–1–1	Applicability	4/20/2012	6/17/2014, 79 FR 34435.	
6.8–1–1.5	Definitions	9/9/2005	3/22/2006, 71 FR 14383.	
6.8–1–2	Particulate emission limitations; modification by commissioner.	4/20/2012	6/17/2014, 79 FR 34435.	
6.8–1–3	Compliance determination	9/9/2005	3/22/2006, 71 FR 14383.	
6.8–1–4	Compliance schedules	9/9/2005	3/22/2006, 71 FR 14383.	
6.8–1–5	Control strategies	4/20/2012	6/17/2014, 79 FR 34435.	
6.8–1–6	State implementation plan revisions	4/20/2012	6/17/2014, 79 FR 34435.	
6.8–1–7	Scope	2/22/2008	4/30/2008, 73 FR 23356.	

EPA-APPROVED INDIANA REGULATIONS—Continued

Indiana citation	Subject	Indiana effective date	EPA approval date	Notes
Rule 2. Lake County: PM_{10} Emission Requirements				
6.8–2–1	General provisions and definitions	2/22/2008	4/30/2008, 73 FR 23356..	
6.8–2–2	Lake County: PM_{10} and total suspended particulates (TSP) emissions.	2/22/2008	4/30/2008, 73 FR 23356..	
6.8–2–4	ASF-Keystone, Inc.—Hammond	2/22/2008	4/30/2008, 73 FR 23356..	
6.8–2–6	BP Products North America, Inc.—Whiting Refinery.	2/22/2008	4/30/2008, 73 FR 23356..	
6.8–2–7	Bucko Construction Company, Inc	2/22/2008	4/30/2008, 73 FR 23356..	
6.8–2–8	Cargill, Inc	11/19/2010	4/14/2011, 76 FR 20846..	
6.8–2–9	W.R. Grace and Co.—Conn	2/22/2008	4/30/2008, 73 FR 23356..	
6.8–2–13	Hammond Group, Inc. (HGI) Halox Division, Lead Products Division, and Hammond Expander Division.	2/22/2008	4/30/2008, 73 FR 23356..	
6.8–2–14	Hammond Group, Inc.—Halstab Division.	2/22/2008	4/30/2008, 73 FR 23356..	
6.8–2–16	Resco Products, Inc	2/22/2008	4/30/2008, 73 FR 23356..	
6.8–2–17	Mittal Steel—Indiana Harbor East Inc	2/22/2008	4/30/2008, 73 FR 23356..	
6.8–2–18	Jupiter Aluminum Corporation	5/29/2015	2/22/2016, 81 FR 8650.	
6.8–2–19	Dover Chemical Corporation—Hammond.	2/22/2008	4/30/2008, 73 FR 23356..	
6.8–2–20	LaSalle Steel Company	2/22/2008	4/30/2008, 73 FR 23356..	
6.8–2–21	Mittal Steel—Indiana Harbor West Inc.	2/22/2008	4/30/2008, 73 FR 23356..	
6.8–2–22	Carmeuse Lime Inc	2/22/2008	4/30/2008, 73 FR 23356..	
6.8–2–24	Methodist Hospital Inc	2/22/2008	4/30/2008, 73 FR 23356..	
6.8–2–25	National Recovery Systems	2/22/2008	4/30/2008, 73 FR 23356..	
6.8–2–26	NIPSCo—Dean H. Mitchell Station	2/22/2008	4/30/2008, 73 FR 23356..	
6.8–2–27	Praxair Inc	2/22/2008	4/30/2008, 73 FR 23356..	
6.8–2–28	Premiere Candy Company	2/22/2008	4/30/2008, 73 FR 23356..	
6.8–2–29	Reed Minerals–Plant #14	5/29/2015	2/22/2016, 81 FR 8650.	
6.8–2–30	Rhodia, Inc	2/22/2008	4/30/2008, 73 FR 23356..	
6.8–2–31	Silgan Containers Manufacturing Corporation.	2/22/2008	4/30/2008, 73 FR 23356..	
6.8–2–32	Smith Ready Mix, Inc	2/22/2008	4/30/2008, 73 FR 23356..	
6.8–2–33	State Line Energy, LLC	2/22/2008	4/30/2008, 73 FR 23356..	
6.8–2–34	Huhtamaki Foodservice, Inc.	5/29/2015	2/22/2016, 81 FR 8650.	
6.8–2–35	Conopco, Inc. d/b/a Unilever HPC USA.	2/22/2008	4/30/2008, 73 FR 23356..	
6.8–2–36	Union Tank Car Company, Plant 1	2/22/2008	4/30/2008, 73 FR 23356..	
6.8–2–37	United States Gypsum Company	2/22/2008	4/30/2008, 73 FR 23356..	
6.8–2–38	U.S. Steel—Gary Works	2/22/2008	4/30/2008, 73 FR 23356..	
Rule 4. Lake County: Opacity Limits; Test Methods				
6.8–4–1	Test methods	2/22/2008	4/30/2008, 73 FR 23356..	
Rule 8. Lake County: Continuous Compliance Plan				
6.8–8–1	Applicability	2/22/2008	4/30/2008, 73 FR 23356..	
6.8–8–2	Documentation; operation and maintenance procedures.	9/9/2005	3/22/2006, 71 FR 14383..	
6.8–8–3	Plan requirements	9/9/2005	3/22/2006, 71 FR 14383..	
6.8–8–4	Plan; schedule for complying with 326 IAC 6.8–7.	9/9/2005	3/22/2006, 71 FR 14383..	
6.8–8–5	Plan; source categories	9/9/2005	3/22/2006, 71 FR 14383..	
6.8–8–6	Plan; particulate matter control equipment; operation and maintenance.	9/9/2005	3/22/2006, 71 FR 14383..	
6.8–8–7	Plan; particulate matter control equipment; recording; operation; inspection.	9/9/2005	3/22/2006, 71 FR 14383..	
6.8–8–8	Plan; department review	9/9/2005	3/22/2006, 71 FR 14383..	
Rule 9. Lake County: PM_{10} Coke Battery Emission Requirements				
6.8–9–1	Applicability	9/9/2005	3/22/2006, 71 FR 14383..	
6.8–9–2	Definitions	9/9/2005	3/22/2006, 71 FR 14383..	
6.8–9–3	Emission limitations	2/22/2008	4/30/2008, 73 FR 23356..	

EPA-APPROVED INDIANA REGULATIONS—Continued

Indiana citation	Subject	Indiana effective date	EPA approval date	Notes
Rule 10. Lake County: Fugitive Particulate Matter				
6.8–10–1	Applicability	2/22/2008	4/30/2008, 73 FR 23356..	
6.8–10–2	Definitions	9/9/2005	3/22/2006, 71 FR 14383..	
6.8–10–3	Particulate matter emission limitations.	9/9/2005	3/22/2006, 71 FR 14383..	
6.8–10–4	Compliance requirements; control plans.	9/9/2005	3/22/2006, 71 FR 14383..	
Rule 11. Lake County: Particulate Matter Contingency Measures				
6.8–11–1	Applicability	9/9/2005	3/22/2006, 71 FR 14383..	
6.8–11–2	"Ambient monitoring data" defined	9/9/2005	3/22/2006, 71 FR 14383..	
6.8–11–3	Exceedances	9/9/2005	3/22/2006, 71 FR 14383..	
6.8–11–4	Violation of 24-hour standard	9/9/2005	3/22/2006, 71 FR 14383..	
6.8–11–5	Violation of annual standard	9/9/2005	3/22/2006, 71 FR 14383..	
6.8–11–6	Reduction measures	9/9/2005	3/22/2006, 71 FR 14383..	
Article 7. Sulfur Dioxide Rules				
Rule 1.1. Sulfur Dioxide Emission Limitations				
7–1.1–1	Applicability	6/24/2005	9/26/2005, 70 FR 56129..	
7–1.1–2	Sulfur dioxide emission limitations	6/24/2005	9/26/2005, 70 FR 56129..	
Rule 2. Compliance				
7–2–1	Reporting requirements; methods to determine compliance.	9/10/2011	10/23/13, 78 FR 63093.	
Rule 3. Ambient Monitoring				
7–3–2	Ambient monitoring		5/13/1982, 47 FR 20583..	
Rule 4. Emission Limitations and Requirements by County				
7–4–2	Marion County sulfur dioxide emission limitations.	3/11/1999	8/2/2000, 65 FR 47336..	
7–4–3	Vigo County sulfur dioxide emission limitations.	9/30/2004	2/28/2005, 70 FR 9533..	
7–4–4	Wayne County sulfur dioxide emission limitations.	4/10/1988	9/1/1988, 53 FR 33808..	
7–4–5	LaPorte County sulfur dioxide emission limitations.	4/10/1988	9/1/1988, 53 FR 33808..	
7–4–6	Jefferson County sulfur dioxide emission limitations.	4/10/1988	9/1/1988, 53 FR 33808..	
7–4–7	Sullivan County sulfur dioxide emission limitations.	4/10/1988	9/1/1988, 53 FR 33808..	
7–4–8	Vermillion County sulfur dioxide emission limitations.	4/10/1988	1/19/1989, 54 FR 2112..	
7–4–9	Floyd County sulfur dioxide emission limitations.	4/10/1988	9/1/1988, 53 FR 33808..	
7–4–10	Warrick County sulfur dioxide emission limitations.	8/30/2008	11/10/2009, 74 FR 57904..	
7–4–11	Morgan County sulfur dioxide emission limitations.	5/13/1988	12/16/1988, 53 FR 50521..	
7–4–12.1	Gibson County sulfur dioxide emission limitations.	12/5/1990	9/19/1994, 59 FR 47804..	
7–4–13	Dearborn County sulfur dioxide emission limitations.	3/16/2005	2/28/2006, 71 FR 9936..	
7–4–14	Porter County sulfur dioxide emission limitations.	10/23/1988	1/19/1989, 54 FR 2112..	
Rule 4.1. Lake County Sulfur Dioxide Emission Limitations				
7–4.1–1	Lake County sulfur dioxide emission limitations.	6/24/2005	9/26/2005, 70 FR 56129..	
7–4.1–2	Sampling and analysis protocol	6/24/2005	9/26/2005, 70 FR 56129..	
7–4.1–3	BP Products North America Inc. sulfur dioxide emission limitations.	6/24/2005	9/26/2005, 70 FR 56129..	

EPA-APPROVED INDIANA REGULATIONS—Continued

Indiana citation	Subject	Indiana effective date	EPA approval date	Notes
7–4.1–4	Bucko Construction sulfur dioxide emission limitations.	6/24/2005	9/26/2005, 70 FR 56129..	
7–4.1–5	Cargill, Inc. sulfur dioxide emission limitations.	11/19/2010	4/14/2011, 76 FR 20846..	
7–4.1–6	Carmeuse Lime sulfur dioxide emission limitations.	6/24/2005	9/26/2005, 70 FR 56129..	
7–4.1–7	Cokenergy Inc. sulfur dioxide emission limitations.	6/24/2005	9/26/2005, 70 FR 56129..	
7–4.1–8	Indiana Harbor Coke Company sulfur dioxide emission limitations.	6/24/2005	9/26/2005, 70 FR 56129..	
7–4.1–9	Ironside Energy, LLC sulfur dioxide emission limitations.	6/24/2005	9/26/2005, 70 FR 56129..	
7–4.1–10	ISG Indiana Harbor Inc. sulfur dioxide emission limitations.	6/24/2005	9/26/2005, 70 FR 56129..	
7–4.1–11	Ispat Inland Inc. sulfur dioxide emission limitations.	6/24/2005	9/26/2005, 70 FR 56129..	
7–4.1–12	Methodist Hospital sulfur dioxide emission limitations.	6/24/2005	9/26/2005, 70 FR 56129..	
7–4.1–13	National Recovery Systems sulfur dioxide emission limitations.	6/24/2005	9/26/2005, 70 FR 56129..	
7–4.1–14	NIPSCO Dean H. Mitchell Generating Station sulfur dioxide emission limitations.	6/24/2005	9/26/2005, 70 FR 56129..	
7–4.1–15	Rhodia sulfur dioxide emission limitations.	6/24/2005	9/26/2005, 70 FR 56129..	
7–4.1–16	Safety-Kleen Oil Recovery Company sulfur dioxide emission limitations.	6/24/2005	9/26/2005, 70 FR 56129..	
7–4.1–17	SCA Tissue North America LLC sulfur dioxide emission limitations.	6/24/2005	9/26/2005, 70 FR 56129..	
7–4.1–18	State Line Energy, LLC sulfur dioxide emission limitations.	6/24/2005	9/26/2005, 70 FR 56129..	
7–4.1–19	Unilever HPC USA sulfur dioxide emission limitations.	6/24/2005	9/26/2005, 70 FR 56129..	
7–4.1–20	U.S. Steel—Gary Works sulfur dioxide emission limitations.	6/24/2005	9/26/2005, 70 FR 56129..	
7–4.1–21	Walsh and Kelly sulfur dioxide emission limitations.	5/29/2015	9/11/2015, 80 FR 54723.	
Article 8. Volatile Organic Compound Rules				
Rule 1. General Provisions:				
8–1–0.5	Definitions	10/18/1995	11/3/1999, 64 FR 59642.	
8–1–1	Applicability	6/5/1991	3/6/1992, 57 FR 8082.	
8–1–2	Compliance methods	12/15/2002	5/5/2003, 68 FR 23604.	
8–1–3	Compliance schedules	5/15/2010	4/14/2011, 76 FR 20850.	
8–1–4	Testing procedures	7/15/2001	9/11/2002, 67 FR 57515.	
8–1–5	Petition for site-specific reasonably available control technology (RACT) plan.	11/10/1988	9/6/1990, 55 FR 36635.	
8–1–6	New facilities; general reduction requirements.	6/24/2006	6/13/2007, 72 FR 32531.	
8–1–7	Military specifications	.....	10/27/1982, 47 FR 20586.	
8–1–9	General recordkeeping and reporting requirements.	5/22/1997	6/29/1998, 63 FR 35141.	
8–1–10	Compliance certification, recordkeeping, and reporting requirements for certain coating facilities using compliant coatings.	5/22/1997	6/29/1998, 63 FR 35141.	
8–1–11	Compliance certification, recordkeeping, and reporting requirements for certain coating facilities using daily-weighted averaging.	5/22/1997	6/29/1998, 63 FR 35141.	
8–1–12	Compliance certification, recordkeeping, and reporting requirements for certain coating facilities using control devices.	5/22/1997	6/29/1998, 63 FR 35141.	
Rule 2. Surface Coating Emission Limitations:				
8–2–1	Applicability	11/19/2010	10/13/11, 76 FR 63549.	

EPA-APPROVED INDIANA REGULATIONS—Continued

Indiana citation	Subject	Indiana effective date	EPA approval date	Notes
8–2–2	Automobile and light duty truck coating operations.	1/2/2010	2/24/2010, 75 FR 8246.	
8–2–3	Can coating operations		2/10/1986, 51 FR 4912.	
8–2–4	Coil coating operations		10/27/1982, 47 FR 20586.	
8–2–5	Paper coating operations	12/3/2009	2/24/2010, 75 FR 8246.	
8–2–6	Metal furniture coating operations	12/3/2009	2/24/2010, 75 FR 8246.	
8–2–7	Large appliance coating operations	12/3/2009	2/24/2010, 75 FR 8246.	
8–2–8	Magnet wire coating operations		10/27/1982, 47 FR 20586.	
8–2–9	Miscellaneous metal and plastic parts coating operations.	11/19/2010	10/13/11, 76 FR 63549.	
8–2–10	Flat wood panels; manufacturing operations.	12/3/2009	2/24/2010, 75 FR 8246.	
8–2–11	Fabric and vinyl coating	10/23/1988	3/6/1992, 57 FR 8082.	
8–2–12	Wood furniture and cabinet coating	4/10/1988	11/24/1990, 55 FR 39141.	
Rule 3. Organic Solvent Degreasing Operations				
8–3–1	Applicability and Exemptions	3/1/2013	7/25/2014, 79 FR 43260.	
8–3–2	Cold cleaner degreaser control equipment and operating requirements.	3/1/2013	7/25/2014, 79 FR 43260.	
8–3–3	Open top vapor degreaser operation	3/1/2013	7/25/2014, 79 FR 43260.	
8–3–4	Conveyorized degreaser control equipment and operating requirements.	3/1/2013	7/25/2014, 79 FR 43260.	
8–3–5	Cold cleaner degreaser operation and control (Repealed).	3/1/2013	7/25/2014, 79 FR 43260.	
8–3–6	Open top vapor degreaser operation and control requirements (Repealed).	3/1/2013	7/25/2014, 79 FR 43260.	
8–3–7	Conveyorized degreaser operation and control (Repealed).	3/1/2013	7/25/2014, 79 FR 43260.	
8–3–8	Material requirements for cold cleaner degreasers.	3/1/2013	7/25/2014, 79 FR 43260.	
Rule 4. Petroleum Sources:				
8–4–1	Applicability	3/5/2015	6/9/2016, 81 FR 37160.	
8–4–2	Petroleum refineries		1/18/1983, 48 FR 2127.	
8–4–3	Petroleum liquid storage facilities		2/10/1986, 51 FR 4912.	
8–4–4	Bulk gasoline terminals		1/18/1983, 48 FR 2127.	
8–4–5	Bulk gasoline plants		1/18/1983, 48 FR 2127.	
8–4–6	Gasoline dispensing facilities	3/5/2015	6/9/2016, 81 FR 37160.	
8–4–7	Gasoline transports	11/5/1999	5/31/2002, 67 FR 38006.	
8–4–8	Leaks from petroleum refineries; monitoring; reports.	6/5/1991	3/6/1992, 57 FR 8082.	
8–4–9	Leaks from transports and vapor collection systems; records.	11/5/1999	5/31/2002, 67 FR 38006.	
Rule 5. Miscellaneous Operations:				
8–5–1	Applicability of rule	3/22/2007	2/20/2008, 73 FR 9201.	
8–5–2	Asphalt paving rules		2/10/1986, 51 FR 4912.	
8–5–3	Synthesized pharmaceutical manufacturing operations.	5/18/1990	3/6/1992, 57 FR 8082.	
8–5–4	Pneumatic rubber tire manufacturing		1/18/1983, 48 FR 2124.	
8–5–5	Graphic arts operations	5/22/1997	6/29/1998, 63 FR 35141.	
8–5–6	Fuel grade ethanol production at dry mills.	3/22/2007	2/20/2008, 73 FR 9201.	
Rule 6. Organic Solvent Emission Limitations:				
8–6–1	Applicability of rule		1/18/1983, 48 FR 2124.	
8–6–2	Emission limits; exemptions		1/18/1983, 48 FR 2124.	
Rule 7. Specific VOC Reduction Requirements for Lake, Porter, Clark, and Floyd Counties:				
8–7–1	Definitions	1/21/1995	7/5/1995, 60 FR 34856.	
8–7–2	Applicability	1/21/1995	7/5/1995, 60 FR 34856.	
8–7–3	Emission limits	1/21/1995	7/5/1995, 60 FR 34856.	
8–7–4	Compliance methods	1/21/1995	7/5/1995, 60 FR 34856.	

EPA-APPROVED INDIANA REGULATIONS—Continued

Indiana citation	Subject	Indiana effective date	EPA approval date	Notes
8–7–5	Compliance plan	1/21/1995	7/5/1995, 60 FR 34856.	
8–7–6	Certification, recordkeeping, and reporting requirements for coating facilities.	1/21/1995	7/5/1995, 60 FR 34856.	
8–7–7	Test methods and procedures	1/21/1995	7/5/1995, 60 FR 34856.	
8–7–8	General recordkeeping and reports	1/21/1995	7/5/1995, 60 FR 34856.	
8–7–9	Control system operation, maintenance, and testing.	1/21/1995	7/5/1995, 60 FR 34856.	
8–7–10	Control system monitoring, recordkeeping, and reporting.	1/21/1995	7/5/1995, 60 FR 34856.	
Rule 8. Municipal Solid Waste Landfills Located in Clark, Floyd, Lake, and Porter Counties:				
8–8–1	Applicability	1/18/1996	1/17/1997, 62 FR 2591.	
8–8–2	Definitions	1/18/1996	1/17/1997, 62 FR 2591.	
8–8–3	Requirements; incorporation by reference of federal standards.	1/18/1996	1/17/1997, 62 FR 2591.	
8–8–4	Compliance deadlines	1/18/1996	1/17/1997, 62 FR 2591.	
8–8–8.1	Municipal Solid Waste Landfills Not Located in Clark, Floyd, Lake, and Porter Counties.	1/18/1996	1/17/1997, 62 FR 2591.	
8–8.1–1	Applicability	1/18/1996	1/17/1997, 62 FR 2591.	
8–8.1–2	Definitions	1/18/1996	1/17/1997, 62 FR 2591.	
8–8.1–3	Requirements; incorporation by reference of federal standards.	1/18/1996	1/17/1997, 62 FR 2591.	
8–8.1–4	Compliance deadlines	1/18/1996	1/17/1997, 62 FR 2591.	
8–8.1–5	Alternative requirements	1/18/1996	1/17/1997, 62 FR 2591.	
Rule 9. Volatile Organic Liquid Storage Vessels:				
8–9–1	Applicability	1/18/1996	1/17/1997, 62 FR 2593.	
8–9–2	Exemptions	1/18/1996	1/17/1997, 62 FR 2593.	
8–9–3	Definitions	1/18/1996	1/17/1997, 62 FR 2593.	
8–9–4	Standards	1/18/1996	1/17/1997, 62 FR 2593.	
8–9–5	Testing and procedures	1/18/1996	1/17/1997, 62 FR 2593.	
8–9–6	Recordkeeping and reporting requirements.	1/18/1996	1/17/1997, 62 FR 2593.	
Rule 10. Automobile Refinishing:				
8–10–1	Applicability	8/13/1998	12/20/1999, 64 FR 71031.	
8–10–2	Definitions	11/2/1995	6/13/1996, 61 FR 29965.	
8–10–3	Requirements	5/23/1999	12/20/1999, 64 FR 71031.	
8–10–4	Means to limit volatile organic compound emissions.	11/2/1995	6/13/1996, 61 FR 29965.	
8–10–5	Work practice standards	8/13/1998	12/20/1999, 64 FR 71031.	
8–10–6	Compliance procedures	8/13/1998	12/20/1999, 64 FR 71031.	
8–10–7	Test procedures	11/2/1995	6/13/1996, 61 FR 29965.	
8–10–8	Control system operation, maintenance, and monitoring (Repealed).	11/2/1995	6/13/1996, 61 FR 29965.	
8–10–9	Recordkeeping and reporting	8/13/1998	12/20/1999, 64 FR 71031.	
Rule 11. Wood Furniture Coating:				
8–11–1	Applicability	1/4/1996	10/30/1996, 61 FR 55889.	
8–11–2	Definitions	1/4/1996	10/30/1996, 61 FR 55889.	
8–11–3	Emission limits	1/4/1996	10/30/1996, 61 FR 55889.	
8–11–4	Work practice standards	1/4/1996	10/30/1996, 61 FR 55889.	
8–11–5	Continuous compliance plan	1/4/1996	10/30/1996, 61 FR 55889.	
8–11–6	Compliance procedures and monitoring requirements.	1/4/1996	10/30/1996, 61 FR 55889.	
8–11–7	Test procedures	1/4/1996	10/30/1996, 61 FR 55889.	
8–11–8	Recordkeeping requirements	1/4/1996	10/30/1996, 61 FR 55889.	
8–11–9	Reporting requirements	1/4/1996	10/30/1996, 61 FR 55889.	
8–11–10	Provisions for sources electing to use emissions averaging.	1/4/1996	10/30/1996, 61 FR 55889.	
Rule 12. Shipbuilding or Ship Repair Operations in Clark, Floyd, Lake, and Porter Counties:				
8–12–1	Applicability	5/1/1996	1/22/1997, 62 FR 3216.	
8–12–2	Exemptions	7/15/2001	4/1/2003, 68 FR 15664.	

EPA-APPROVED INDIANA REGULATIONS—Continued

Indiana citation	Subject	Indiana effective date	EPA approval date	Notes
8–12–3	Definitions	5/1/1996	1/22/1997, 62 FR 3216.	
8–12–4	Volatile organic compound emissions limiting requirements.	06/21/2015	08/23/2016, 81 FR 57469.	
8–12–5	Compliance requirements	7/15/2001	4/1/2003, 68 FR 15664.	
8–12–6	Test methods and procedures	7/15/2001	4/1/2003, 68 FR 15664.	
8–12–7	Recordkeeping, notification, and reporting requirements.	7/15/2001	4/1/2003, 68 FR 15664.	
Rule 13. Sinter Plants:				
8–13–1	Applicability	7/24/1998	7/5/2000, 65 FR 41350.	
8–13–2	Definitions	7/24/1998	7/5/2000, 65 FR 41350.	
8–13–3	Emission limit	7/24/1998	7/5/2000, 65 FR 41350.	
8–13–4	Compliance requirements	7/24/1998	7/5/2000, 65 FR 41350.	
8–13–5	Test procedures	7/24/1998	7/5/2000, 65 FR 41350.	
8–13–6	Control measure operation, maintenance, and monitoring.	7/24/1998	7/5/2000, 65 FR 41350.	
8–13–7	Recordkeeping and reporting	7/24/1998	7/5/2000, 65 FR 41350.	
8–13–8	Continuous emissions monitoring	7/24/1998	7/5/2000, 65 FR 41350.	
Rule 14. Architectural and Industrial Maintenance (AIM) Coatings				
8–14–1	Applicability	12/1/2010	8/30/2012, 77 FR 52606..	
8–14–2	Definitions	12/1/2010	8/30/2012, 77 FR 52606..	
8–14–3	Standards for AIM coatings	12/1/2010	8/30/2012, 77 FR 52606..	
8–14–4	Container labeling	12/1/2010	8/30/2012, 77 FR 52606..	
8–14–5	Recordkeeping and reporting requirements.	12/1/2010	8/30/2012, 77 FR 52606..	
8–14–6	Compliance provisions and test methods.	12/1/2010	8/30/2012, 77 FR 52606..	
8–14–7	Application of traffic marking materials.	12/1/2010	8/30/2012, 77 FR 52606..	
Rule 15. Standards for Consumer and Commercial Products				
8–15–1	Applicability	12/1/2010	6/29/2012, 77 FR 38725.	
8–15–2	Definitions	12/1/2010	6/29/2012, 77 FR 38725.	
8–15–3	Standards	12/1/2010	6/29/2012, 77 FR 38725.	
8–15–4	Exemptions	12/1/2010	6/29/2012, 77 FR 38725.	
8–15–5	Innovative products exemption	12/1/2010	6/29/2012, 77 FR 38725.	
8–15–6	Alternative control plan	12/1/2010	6/29/2012, 77 FR 38725.	
8–15–7	Administrative requirements	12/1/2010	6/29/2012, 77 FR 38725.	
8–15–8	Record keeping and reporting requirements.	12/1/2010	6/29/2012, 77 FR 38725.	
8–15–9	Test methods	12/1/2010	6/29/2012, 77 FR 38725.	
Rule 17. Industrial Solvent Cleaning Operations				
8–17–1	Applicability	1/2/2010	2/24/2010, 75 FR 8246	
8–17–2	Exemptions	5/3/2012	12/27/2013, 78 FR 78726	
8–17–3	"Composite partial vapor pressure" defined.	1/2/2010	2/24/2010, 75 FR 8246	
8–17–4	VOC emissions control requirements	5/3/2012	12/27/2013, 78 FR 78726	
8–17–5	Compliance dates	1/2/2010	2/24/2010, 75 FR 8246	
8–17–6	Compliance test methods	1/2/2010	2/24/2010, 75 FR 8246	
8–17–7	Monitoring and recordkeeping	5/3/2012	12/27/2013, 78 FR 78726	
8–17–8	Reporting requirements for monitoring and recordkeeping information.	1/2/2010	2/24/2010, 75 FR 8246	
8–17–9	Requirements on compliance certification.	1/2/2010	2/24/2010, 75 FR 8246	
8–17–10	Recordkeeping requirements for exempt sources.	1/2/2010	2/24/2010, 75 FR 8246	
Article 9. Carbon Monoxide Emission Rules				
9–1	Carbon Monoxide Emission Limits	12/15/2002	11/30/2004, 69 FR 69531.	

EPA-APPROVED INDIANA REGULATIONS—Continued

Indiana citation	Subject	Indiana effective date	EPA approval date	Notes
Article 10. Nitrogen Oxides Rules				
10–1	Nitrogen Oxides Control in Clark and Floyd Counties.	6/12/1996	6/3/1997, 62 FR 30253.	
10–3	Nitrogen Oxide Reduction Program for Specific Source Categories.	2/25/2007	11/29/2010, 75 FR 72956	Sec. 1.
10–4	Nitrogen Oxides Budget Trading Program.	2/25/2007	11/29/2010, 75 FR 72956	Sec. 16.
10–5	Nitrogen Oxide Reduction Program for Internal Combustion Engines (ICE).	2/26/2006	10/1/2007, 72 FR 55664.	
10–6	Nitrogen Oxides Emissions Limitations for Southern Indiana Gas and Electric Company.	8/30/2008	11/10/2009, 74 FR 57904	Sec. 1.
Article 11. Emission Limitations for Specific Types of Operations				
11–1	Existing Foundries	7/25/1968	5/31/1972, 37 FR 10863.	
11–3	Coke Oven Batteries	9/26/1980	12/1/1983, 48 FR 54615	Sec. 1, 3, 5.
		6/11/1993	6/15/1995, 60 FR 31412	Sec. 2(a)–(f), 2(i), 4.
11–4	Fiberglass Insulation Manufacturing	9/26/1980	4/3/1984, 49 FR 13144	Sec. 1, 2, 3, 4.
		9/27/2002	12/9/2002, 67 FR 72844	Sec. 5.
11–5	Fluoride Emission Limitations for Existing Primary Aluminum Plants.	2/6/1981	11/27/1981, 46 FR 57892.	
Article 13. Motor Vehicle Emission and Fuel Standards				
13–1.1	Motor Vehicle Inspection and Maintenance Requirements.	1/22/1999	9/27/2001, 66 FR 49297.	
13–3	Control of Gasoline Reid Vapor Pressure.	12/15/2002	7/21/2003, 68 FR 42978	Sec. 1.
		8/5/1995	2/9/1996, 61 FR 4895	Sec. 2 to 7.
Article 14. Emission Standards for Hazardous Air Pollutants				
14–1	General Provisions	5/13/1988	9/17/1992, 57 FR 42889.	
14–8	Emission Standard for Equipment Leaks (Fugitive Emission Sources).	5/13/1988	9/17/1992, 57 FR 42889.	
14–9	Emission Limitations for Benzene from Furnace Coke Oven By-Product Recovery Plants.	5/13/1988	9/17/1992, 57 FR 42889.	
Article 15. Lead Rules				
Rule 1. Lead Emission Limitations				
15–1–2	Source-specific provisions	3/1/2013	7/17/2015, 80 FR 42393.	
15–1–3	Control of fugitive lead dust	3/1/2013	7/17/2015, 80 FR 42393.	
15–1–4	Compliance	3/1/2013	7/17/2015, 80 FR 42393.	
Article 16. State Environmental Policy				
16–3	General Conformity	7/6/1996	1/14/1998, 63 FR 2146	Sec. 1.
Article 19. Mobile Source Rules				
19–3	Clean Fuel Fleet Vehicles	1/18/1996	3/21/1996, 61 FR 11552.	
Article 20. Hazardous Air Pollutants				
Rule 10 Bulk Gasoline Distribution Facilities				
20–10–1	Applicability; incorporation by reference of federal standards.	11/14/1999	5/31/2002, 67 FR 38006.	
Rule 20–13.1 Secondary Lead Smelters				
20–13.1–1	Applicability	3/1/2013	7/17/2015, 80 FR 42393	Sections (a)–(c), (e), and (f)
20–13.1–2	Definitions	3/1/2013	7/17/2015, 80 FR 42393.	

EPA-APPROVED INDIANA REGULATIONS—Continued

Indiana citation	Subject	Indiana effective date	EPA approval date	Notes
20–13.1–3	Emission limitations; lead standards for Exide Technologies, Incorporation.	3/1/2013	7/17/2015, 80 FR 42393.	
20–13.1–4	Emission limitations; lead standards for Quemetco, Incorporated.	3/1/2013	7/17/2015, 80 FR 42393.	
20–13.1–5	Emission limitations and operating provisions.	3/1/2013	7/17/2015, 80 FR 42393 ...	Sections (a)–(c), (e), and (h)
20–13.1–6	Total enclosure requirements	3/1/2013	7/17/2015, 80 FR 42393.	
20–13.1–7	Total enclosure monitoring requirements.	3/1/2013	7/17/2015, 80 FR 42393.	
20–13.1–8	Fugitive dust source requirements	3/1/2013	7/17/2015, 80 FR 42393.	
20–13.1–9	Bag leak detection system requirements.	3/1/2013	7/17/2015, 80 FR 42393.	
20–13.1–10 ...	Other requirements	3/1/2013	7/17/2015, 80 FR 42393 ...	Sections (a)–(d), (f) and (g)
20–13.1–11 ...	Compliance testing	3/1/2013	7/17/2015, 80 FR 42393 ...	Sections (a)–(c), and (f)
20–13.1–12 ...	Compliance testing methods	3/1/2013	7/17/2015, 80 FR 42393 ...	Section (a)
20–13.1–13 ...	Notification requirements	3/1/2013	7/17/2015, 80 FR 42393 ...	Sections (b)–(d)
20–13.1–14 ...	Record keeping and reporting requirements.	3/1/2013	7/17/2015, 80 FR 42393 ...	Sections (a)–(d), (e)(1), and (e)(4)–(e)(14)
Article 24. Trading Programs: Nitrogen Oxides (NO_X) and Sulfur Dioxide (SO_2)				
24–1	Clean Air Interstate Rule Nitrogen Oxides Annual Trading Program.	2/25/2007	11/29/2010, 75 FR 72956	Sec. 1, 3, 4, 5, 6, 10, 11.
		6/11/2009	11/29/2010, 75 FR 72956	Sec. 2, 7, 8, 9, 12.
24–2	Clean Air Interstate Rule (CAIR) Sulfur Dioxide Trading Program.	2/25/2007	11/29/2010, 75 FR 72956	Sec. 1, 3, 4, 5, 6, 9, 10.
		6/11/2009	11/29/2010, 75 FR 72956	Sec. 2, 7, 8, 11.
24–3	Clean Air Interstate Rule (CAIR) NO_X Ozone Season Trading Program.	2/25/2007	11/29/2010, 75 FR 72956	Sec. 3, 4, 5, 6, 10, 11.
		6/11/2009	11/29/2010, 75 FR 72956	Sec. 1, 2, 7, 8, 9, 12.
Article 26. Regional Haze				
Rule 2. Best Available Retrofit Technology Emission Limitations				
26–2–1	Applicability	3/9/2011	6/11/2012, 77 FR 34218.	
26–2–2	Alcoa emission limitations and compliance methods.	6/29/2014	8/20/2015, 80 FR 50581.	
State Statutes				
IC 13–13–8 ...	Environmental Rules Board	1/1/2013	12/24/2013, 78 FR 77599	1, 2(a), 2(b), 3, 4, and 11 only.

[1] EPA is approving this rule for the counties of Adams, Allen, Bartholomew, Benton, Blackford, Boone, Brown, Carroll, Cass, Clay, Clinton, Crawford, Daviess, Dearborn, Decatur, De Kalb, Delaware, Dubois, Elkhart, Fayette, Fountain, Franklin, Fulton, Gibson, Grant, Greene, Hamilton, Hancock, Harrison, Hendricks, Henry, Howard, Huntington, Jackson, Jasper, Jay, Jefferson, Jennings, Johnson, Knox, Kosciusko, La Porte, Lagrange, Lawrence, Madison, Marion, Marshall, Martin, Miami, Monroe, Montgomery, Morgan, Newton, Noble, Ohio, Orange, Owen, Parke, Perry, Pike, Posey, Pulaski, Putnam, Randolph, Ripley, Rush, St. Joseph, Scott, Shelby, Spencer, Starke, Steuben, Sullivan, Switzerland, Tippecanoe, Tipton, Union, Vanderburgh, Vermillion, Vigo, Wabash, Warren, Warrick, Washington, Wayne, Wells, White, and Whitley.

(d) *EPA approved State source-specific requirements.*

EPA-APPROVED INDIANA SOURCE-SPECIFIC PROVISIONS

CO date	Title	SIP rule	EPA approval	Explanation
1/11/2016	A.B. Brown Generating Station.	N.A.	5/6/2016, 81 FR 27330	Limitation intended to support attainment designation.
10/1/1999	ALCOA-Warrick	5–1–2	7/5/2000, 65 FR 41352 (*also see* 64 FR 40287).	Alt. opacity limits (permit).
12/15/1999	ALCOA-Warrick	5–1–2	7/5/2000, 65 FR 41352 (*also see* 64 FR 40287).	Alt. opacity limits (permit).
2/1/2016	Clifty Creek Generating Station.	N.A.	5/6/2016, 81 FR 27330	Limitation intended to support attainment designation.
10/12/1999	Crane Naval	8–2–9	12/31/2002, 67 FR 79859	Exemption.
2/11/2004	Eli Lilly	8–5–3	11/8/2004, 69 FR 64661 ...	Exemption.
12/22/2004	Transwheel	8–3–5(a)(5)(C)	4/12/2005, 70 FR 19000 ...	Equivalent control.

EPA-APPROVED INDIANA SOURCE-SPECIFIC PROVISIONS—Continued

CO date	Title	SIP rule	EPA approval	Explanation
9/8/2015	Abengoa Bioenergy of Indiana.	N.A.	8/12/2016, 81 FR 53297	Alternative control technology requirements.
10/20/2016	SABIC Innovative Plastics	N.A	5/10/2017, 82 FR 21703	Limitation intended to support attainment designation.
11/16/2016	Carmeuse Lime Inc	N.A	5/10/2017, 82 FR 21708	Limitation intended to support attainment designation.

(e) *EPA approved nonregulatory and quasi-regulatory provisions.*

EPA-APPROVED INDIANA NONREGULATORY AND QUASI-REGULATORY PROVISIONS

Title	Indiana date	EPA approval	Explanation
Allen County 1997 8-hour ozone maintenance plan		2/25/2014, 79 FR 10385	Revision to motor vehicle emission budgets.
Carbon Monoxide Control Strategy—Lake and Porter Co		1/19/2000, 65 FR 2883	Paragraph (b).
Carbon Monoxide Control Strategy—Lake and Marion Cos.	[1] 1/12/2009	10/15/2009, 74 FR 52891	Paragraph (c).
Chicago Hydrocarbon Control Strategy		8/26/2004, 69 FR 52427	Paragraph (aa).
Chicago-Gary Hydrocarbon Control Strategy		12/30/2008, 73 FR 79652	Paragraph (kk).
Cincinnati-Hamilton, OH–KY–IN 1997 8-hour ozone maintenance plan.		1/29/2012, 78 FR 6035	Revision to motor vehicle emission budgets.
Control Strategy: Particulate Matter		11/27/2009, 74 FR 62243	Paragraph (s).
Evansville Hydrocarbon Control Strategy		12/29/2005, 70 FR 77026	Paragraph (ee).
Evansville/Southwest Indiana Area 1997 annual fine particulate matter maintenance plan.		3/19/2014, 79 FR 15224	Revision to motor vehicle emission budgets.
Fluoride Emission Limitations for Existing Primary Aluminum Plants.		3/11/2003, 68 FR 11472	Removed from SIP, replaced by NESHAP.
Fort Wayne Hydrocarbon Control Strategy		1/11/2007, 72 FR 1292	Paragraph (ff).
Greene and Jackson Counties Hydrocarbon Control Strategy.		11/14/2005, 70 FR 69085	Paragraph (bb).
Greene County 1997 8-hour ozone maintenance plan		2/25/2014, 79 FR 10385	Revision to motor vehicle emission budgets.
Indianapolis Hydrocarbon Control Strategy		10/19/2007, 72 FR 59210	Paragraph (jj).
Lake County sulfur dioxide maintenance plan	3/28/2013	9/3/2013, 78 FR 54173.	
Lake and Porter Counties 1997 8-hour ozone maintenance plan.	2/1/2013	5/15/2013, 78 FR 28503	Revision to motor vehicle emission budgets.
Lake and Porter Counties 1997 annual $PM_{2.5}$ maintenance plan.	2/1/2013	5/15/2013, 78 FR 28503	Revision to motor vehicle emission budgets.
LaPorte Hydrocarbon Control Strategy		7/19/2007, 72 FR 39574	Paragraph (gg).
Lead Control Strategy—Marion County		5/10/2000, 65 FR 29959	Paragraph (d).
Lead Control Strategy—Marion County	[1] 4/1/2009	9/24/2009, 74 FR 48659	Paragraph (e).
Louisville 1997 Annual $PM_{2.5}$ Maintenance Plan	6/16/2011	9/9/2016, 81 FR 62390.	
Louisville Hydrocarbon Control Strategy		9/20/2004, 69 FR 56171	Paragraph (z).
Louisville Hydrocarbon Control Strategy		7/19/2007, 72 FR 39571	Paragraph (ii).
Muncie 1997 8-hour ozone maintenance plan		12/20/2012, 77 FR 75384	Revision to motor vehicle emission budgets.
Muncie Hydrocarbon Control Strategy		11/16/2005, 70 FR 69443	Paragraph (cc).
Ozone Monitoring Season	2/19/1991	12/10/1991, 56 FR 64482.	
PM_{10} Maintenance Plan for Lake County	9/25/2002	1/10/2003, 68 FR 1370	Paragraph (r), also redesignation.
Particulate Control Strategy—Vermillion County		8/26/1997, 62 FR 45168	Paragraph (q).
Regional Haze Five-Year Progress Report	3/30/2016	2/2/2018, 83 FR 4847.	
Regional Haze Plan	1/14/2011 and 3/10/2011	6/11/2012, 77 FR 34218.	
Section 110(a)(2) infrastructure requirements for the 1997 8-Hour Ozone NAAQS.	12/7/2007, 9/19/2008, 3/23/2011, and 4/7/2011	7/13/2011, 76 FR 41075	This action addresses the following CAA elements: 110(a)(2)(A), (B), (C), (D)(ii), (E), (F), (G), (H), (J), (K), (L), and (M).
Section 110(a)(2) infrastructure requirements for the 1997 $PM_{2.5}$ NAAQS.	12/7/2007, 9/19/2008, 3/23/2011, and 4/7/2011	7/13/2011, 76 FR 41075	This action addresses the following CAA elements: 110(a)(2)(A), (B), (C), (D)(ii), (E), (F), (G), (H), (J), (K), (L), and (M).

EPA-APPROVED INDIANA NONREGULATORY AND QUASI-REGULATORY PROVISIONS—Continued

Title	Indiana date	EPA approval	Explanation
Section 110(a)(2) Infrastructure Requirements for the 2006 24-Hour $PM_{2.5}$ NAAQS.	10/20/2009, 6/25/2012, 7/12/2012	7/10/2013, 78 FR 41311 ..	This action addresses the following CAA elements: 110(a)(2)(A), (B), (C), (D)(i)(II), (D)(ii), (E), (F), (G), (H), (J), (K), (L), and (M). We are finalizing approval of the PSD source impact analysis requirements of section 110(a)(2)(C), (D)(i)(II), and (J), but are not finalizing action on the visibility protection requirements of (D)(i)(II), and the state board requirements of (E)(ii). We will address these requirements in a separate action.
	5/22/2013	4/7/2014, 79 FR 18999	This action addresses the following CAA elements: State board requirements of section 110(a)(2)(E)(ii).
Section 110(a)(2) Infrastructure Requirements for the 2008 Lead NAAQS.	12/12/2011	10/16/2014, 79 FR 62035	This action addresses the following CAA elements: 110(a)(2)(A), (B), (C), (D)(i)(I), (D)(i)(II), (D)(ii), (E), (F), (G), (H), (J), (K), (L), and (M).
Section 110(a)(2) Infrastructure Requirements for the 2008 ozone NAAQS.	12/12/2011	6/15/2016, 81 FR 38957 ..	This action addresses the following CAA elements: 110(a)(2)(A), (B), (C), (D), (E), (F), (G), (H), (J), (K), (L), and (M).
Section 110(a)(2) Infrastructure Requirements for the 2010 NO_2 NAAQS.	1/15/2013	8/14/2015, 80 FR 48733 ..	This action addresses the following CAA elements: 110(a)(2)(A), (B), (C), (D)(i)(I), (D)(i)(II) except visibility, (D)(ii), (E), (F), (G), (H), (J) except visibility, (K), (L), and (M).
Section 110(a)(2) Infrastructure Requirements for the 2010 SO_2 NAAQS.	5/22/2013	8/14/2015, 80 FR 48733 ..	This action addresses the following CAA elements: 110(a)(2)(A), (B), (C), (D)(i)(II) except visibility, (D)(ii), (E), (F), (G), (H), (J) except visibility, (K), (L), and (M).
Section 110(a)(2) infrastructure requirements for the 2012 $PM_{2.5}$ NAAQS.	6/10/2016	2/1/2018, 83 FR 4595	This action addresses the following CAA elements: 110(a)(2)(A), (B), (C), (D)(i)(II) except visibility, (D)(ii), (E), (F), (G), (H), (J) except visibility, (K), (L), and (M).
Small Business Compliance Assistance Program	.....	9/2/1993, 58 FR 46541.	
South Bend-Elkhart 1997 8-hour ozone maintenance plan.	.....	12/17/2012, 77 FR 74590	Revision to motor vehicle emission budgets.
South Bend-Elkhart Hydrocarbon Control Strategy	.....	7/19/2007, 72 FR 39577 ..	Paragraph (hh).
Sulfur Dioxide Control Strategy—LaPorte, Marion, Vigo, and Wayne Counties.	.....	11/15/1996, 61 FR 58482	Paragraph (f) and (g).
Terre Haute Hydrocarbon Control Strategy	.....	1/5/2006, 71 FR 541	Paragraph (dd).
Vanderburgh and Warrick Counties 1997 8-hour ozone maintenance plan.	.....	2/25/2014, 79 FR 10385 ..	Revision to motor vehicle emission budgets.
Vigo County 1997 8-hour ozone maintenance plan	.....	2/25/2014, 79 FR 10385 ..	Revision to motor vehicle emission budgets.

[75 FR 58307, Sept. 24, 2010]

EDITORIAL NOTE: For FEDERAL REGISTER citations affecting § 52.770, see the List of CFR Sections Affected, which appears in the Finding Aids section of the printed volume and at *www.fdsys.gov*.

§ 52.771 Classification of regions.

(a) The Indiana plan was evaluated on the basis of the following classifications:

Air quality control region	Pollutant				
	Particulate matter	Sulfur oxides	Nitrogen dioxide	Carbon monoxide	Photochemical oxidants (hydrocarbons)
East Central Indiana Intrastate	II	II	III	III	III
Evansville (Indiana)-Owensboro-Henderson (Kentucky) Interstate	I	II	III	III	III
Louisville Interstate	I	I	III	III	I
Metropolitan Chicago Interstate (Indiana-Illinois)	I	I	I	I	I
Metropolitan Cincinnati Interstate	I	II	III	III	I
Metropolitan Indianapolis Intrastate	I	I	I	I	I
Northeast Indiana Intrastate	II	III	III	III	III
South Bend-Elkhart (Indiana)-Benton Harbor (Michigan) Interstate	I	IA	III	III	III
Southern Indiana Intrastate	IA	IA	III	III	III
Wabash Valley Intrastate	I	I	III	III	III

(b) The requirements of § 51.150 of this chapter are not met by the classification of counties in APC–22 for the purposes of attainment and maintenance of the total suspended particulate ambient air quality standards.

(c) The requirements of § 51.150 of this chapter are not met by the classification of counties in APC–22 for the purposes of attainment and maintenance of the photochemical oxidant (hydrocarbon) ambient air quality standards.

(d) The requirements of § 51.150 of this chapter are not met by the classification of Jefferson, LaPorte, Porter, Vigo and Warrick Counties in Indiana in Regulation APC–22 for the purposes of attainment and maintenance of the sulfur dioxide ambient air quality standards.

[37 FR 10863, May 31, 1972, as amended at 39 FR 16346, May 8, 1974; 40 FR 50033, Oct. 28, 1975; 41 FR 35677, Aug. 24, 1976; 42 FR 34519, July 6, 1977; 51 FR 40675, Nov. 7, 1986]

§ 52.772 [Reserved]

§ 52.773 Approval status.

(a) With the exceptions set forth in this subpart, the Administrator approves Indiana's plan for attainment and maintenance of the National Ambient Air Quality Standards under section 110 of the Clean Air Act.

(b) [Reserved]

(c) The Administrator finds that Indiana's new source review strategy satisfies all requirements of Part D, Title 1 of the Clean Air Act as amended in 1977.

(d)–(e) [Reserved]

(f) The Administrator finds ozone strategies for Clark, Elkhart, Floyd, Lake, Marion, Porter, and St. Joseph Counties satisfy all requirements of Part D, Title I of the Clean Air Act that are required to be submitted by January 1, 1981, except as noted below.

(g) The administrator finds that the total suspended particulate strategies for Clark, Dearborn, Dubois, St. Joseph, Vanderburgh, and Vigo Counties satisfy all the requirements of Part D, Title I of the Clean Air Act except as noted below.

(h) The Administrator finds that the SO_2 strategies for Lake, LaPorte, Marion, Vigo, and Wayne Counties satisfy all requirements of Part D, Title 1 of the Clean Air Act, as amended in 1977. See § 52.770 (c)(67) and (c)(72).

(i) The Administrator finds that Indiana's ozone plan for Lake and Porter Counties, which was required to be submitted by July 1, 1992, does not satisfy all the requirements of part D, title 1 of the Clean Air Act and, thus, is disapproved. See §§ 52.770(c)(69)and 52.770(d). The disapproval does not affect USEPA's approval (or conditional

approval) of individual parts of Indiana's ozone plan and they remain approved.

(j) The Administrator finds that the following portions of Indiana's ozone and CO plans satisfy the related requirements of part D, title 1 of the Clean Air Act, as amended in 1977:

(1) The transportation control plans for Lake, Porter, Clark and Floyd Counties, submitted on May 14, 1986, June 10, 1986, and April 6, 1987.

(2) The vehicle inspection and maintenance plan for Clark, Floyd, Lake, and Porter Counties, submitted October 27, 1989, and January 19, 1990.

(3) The demonstration of attainment, submitted December 2, 1983, and the carbon monoxide plan as a whole for the designated nonattainment area in Lake County.

[37 FR 10864, May 31, 1972, as amended at 46 FR 38, Jan. 2, 1981; 47 FR 6275, Feb. 11, 1982; 47 FR 6623, Feb. 16, 1982; 47 FR 10825, Mar. 12, 1982; 47 FR 20586, May 13, 1982; 47 FR 30980, July 16, 1982; 51 FR 4915, Feb. 10, 1986; 53 FR 33811, Sept. 1, 1988; 53 FR 46613, Nov. 18, 1988; 54 FR 2118, Jan. 19, 1989; 55 FR 31052, July 31, 1990; 59 FR 51114, Oct. 7, 1994; 75 FR 82554, Dec. 30, 2010; 76 FR 59901, Sept. 28, 2011]

§ 52.774 Determination of attainment.

(a) Based upon EPA's review of the air quality data for the 3-year period 2007–2009, EPA determined that the Louisville, Kentucky-Indiana $PM_{2.5}$ nonattainment Area attained the 1997 annual $PM_{2.5}$ NAAQS by the applicable attainment date of April 5, 2010. Therefore, EPA has met the requirement pursuant to CAA section 179(c) to determine, based on the Area's air quality as of the attainment date, whether the Area attained the standard. EPA also determined that the Louisville $PM_{2.5}$ nonattainment Area is not subject to the consequences of failing to attain pursuant to section 179(d).

(b) Based upon EPA's review of the air quality data for the 3-year period 2007–2009, EPA determined that the Cincinnati-Hamilton, Ohio, Kentucky, and Indiana $PM_{2.5}$ nonattainment Area attained the 1997 annual $PM_{2.5}$ NAAQS by the applicable attainment date of April 5, 2010. Therefore, EPA has met the requirement pursuant to CAA section 179(c) to determine, based on the Area's air quality as of the attainment date, whether the Area attained the standard. EPA also determined that the Cincinnati-Hamilton, Ohio, Kentucky, and Indiana $PM_{2.5}$ nonattainment Area is not subject to the consequences of failing to attain pursuant to section 179(d).

[76 FR 55545, Sept. 7, 2011, as amended at 76 FR 60375, Sept. 29, 2011]

§ 52.775 Legal authority.

(a) The requirements of § 51.232(b) of this chapter are not met since the following deficiencies exist in the local agency legal authority:

(1) East Chicago: (i) Authority to require recordkeeping is inadequate (§ 51.230(e) of this chapter).

(ii) Authority to require installation of monitoring devices is inadequate (§ 51.230(f) of this chapter).

(2) Evansville: (i) Authority to prevent construction, modification, or operation of any stationary source at any location where emissions from such source will prevent the attainment or maintenance of a national standard is inadequate (§ 51.230(d) of this chapter).

(ii) Authority to require recordkeeping is inadequate (§ 51.230(e) of this chapter).

(iii) Authority to require installation of monitoring devices is inadequate (§ 51.230(f) of this chapter).

(3) Gary: (i) Authority to require recordkeeping is inadequate (§ 51.230(e) of this chapter).

(ii) Authority to require installation of monitoring devices is inadequate (§ 51.230(f) of this chapter).

(4) Hammond: (i) Authority to require recordkeeping is inadequate (§ 51.230(e) of this chapter).

(ii) Authority to require installation of monitoring devices is inadequate (§ 51.230(f) of this chapter).

(5) Indianapolis: (i) Authority to require recordkeeping is inadequate (§ 51.230(e) of this chapter).

(ii) Authority to require installation of monitoring devices is inadequate (§ 51.230(f) of this chapter).

(6) Michigan City: (i) Authority to require recordkeeping is inadequate (§ 51.230(e) of this chapter).

(ii) Authority to require installation of monitoring devices is inadequate (§ 51.230(f) of this chapter).

(7) Wayne County: (i) Authority to require recordkeeping and to make inspections and conduct tests of air pollution sources is inadequate (§ 51.230(e) of this chapter).

(ii) Authority to require installation of monitoring devices is inadequate (§ 51.230(f) of this chapter).

(iii) Authority to prevent construction, modification, or operation of any stationary source at any location where emissions from such source will prevent the attainment or maintenance of a national standard is inadequate (§ 51.230(d) of this chapter).

(8) Lake County: (i) Authority to require installation of monitoring devices is inadequate (§ 51.230(f) of this chapter).

(ii) Authority to prevent construction, modification, or operation of any stationary source at any location where emissions from such source will prevent the attainment or maintenance of a national standard is inadequate (§ 51.230(d) of this chapter).

(9) St. Joseph County: (i) Authority to prevent construction, modification, or operation of any stationary source at any location where emissions from such source will prevent the attainment or maintenance of a national standard is inadequate (§ 51.230(d) of this chapter).

(ii) Authority to require recordkeeping is inadequate (§ 51.230(e) of this chapter).

(iii) Authority to require installation of monitoring devices is inadequate (§ 51.230(f) of this chapter).

(10) Vigo County: (i) Authority to require recordkeeping is inadequate (§ 51.230(e) of this chapter).

(ii) Authority to require installation of monitoring devices is inadequate (§ 51.230(f) of this chapter).

(iii) Authority to prevent construction, modification, or operation of any stationary source at any location where emissions from such source will prevent the attainment or maintenance of a national standard is inadequate (§ 51.230(d) of this chapter).

(11) Anderson County: (i) Authority to require installation of monitoring devices is inadequate (§ 51.230(f) of this chapter).

[37 FR 10863, May 31, 1972, as amended at 40 FR 55329, Nov. 28, 1975; 51 FR 40676, Nov. 7, 1986; 52 FR 24367, June 30, 1987]

§ 52.776 Control strategy: Particulate matter.

(a) The requirements of subpart G of this chapter are not met since the plan does not provide for attainment and maintenance of the secondary standards for particulate matter in the Metropolitan Indianapolis Intrastate Region.

(b) APC 4–R of Indiana's ''Air Pollution Control Regulations'' (emission limitation for particulate matter from fuel combustion sources), which is part of the control strategy for the secondary standards for particulate matter, is disapproved for the Metropolitan Indianapolis Intrastate Region since it does not provide the degree of control needed to attain and maintain the secondary standards for particulate matter. APC 4–R is approved for attainment and maintenance of the primary standards for particulate matter in the Metropolitan Indianapolis Intrastate Region.

(c) APC–3 of Indiana's Air Pollution Control Regulations (visible emission limitation) is disapproved insofar as the phrase ''for more than a cumulative total of 15 minutes in a 24-hour period'' will interfere with attainment and maintenance of particulate standards.

(d) [Reserved]

(e) Part D—Conditional Approval—The complete Indiana plan for Clark, Dearborn, Dubois, Marion (except for coke batteries), St. Joseph, Vanderburgh, and Vigo Counties is approved provided that the following condition is satisfied:

(1) The Part D Plan must contain Industrial Fugitive Dust Regulations. The State must submit these by July 31, 1982.

(f) 325 IAC 11–3–2(f), (as amended on August 27, 1981) is not approved as it applies to Lake and Marion Counties, insofar as it does not meet the requirements of section 172(b)(3) of the Clean Air Act.

(g) 325 IAC 11–3–2(g) and 11–3–2(h) (as amended on August 27, 1981) are disapproved insofar as they do not meet the requirements of section 110(a)(2)(D) of the Clean Air Act.

(h) Equivalent Visible Emission Limits (EVEL). (1) A 20% 2-hour opacity limit for the underfire stack at Bethlehem Steel Corporation's Coke Battery No. 2 in Porter County is approved as an EVEL to determine compliance with the 325 IAC 6–2 SIP limit of 0.33 lbs/MMBTU. This EVEL is approved for as long as the SIP mass emission limit for this source remains the same as determined by 325 IAC 6–2 (October 6, 1980, submittal). See § 52.770(c)(6), (35), and (42).

(2) Revised opacity limits for the boilers at Olin Corporation in Warren County are approved at § 52.770(c)(51) as an EVEL to determine compliance with the 325 IAC 6–2 SIP limit of 0.80 lbs/MMBTU. This EVEL is approved for as long as the SIP mass emission limit for this source remains the same as determined by 325 IAC 6–2 (October 6, 1980 submittal). See § 52.770(c)(6) and (35).

(i) 325 IAC 6–2.1 is approved with the State's March 27, 1985, commitment that any ''bubble'' approved by the State under 325 IAC 6–2.1–2(b) and 3(b) will also be subject to the State's general ''bubble'' regulation, 325 IAC 2–4. The State additionally committed that until such time as 325 IAC 2–4 is approved as a part of the SIP, all such limits approved under the bubbling provisions of 325 IAC 6–2.1–2(b) and 3(b) will be submitted as site specific revisions to the SIP. Unless and until these emission point specific limits are approved as a portion of the SIP, the SIP limit for each individual emission point will remain the general limit calculated by means of the formulae in 325 IAC 6–2.1–2(a) and 3(a), even though a revised emission point specific limit has been adopted by Indiana under 325 IAC 6–2.1–2(b) and 3(b). See 52.770(c)(50).

(j) [Reserved]

(k) On January 18, 1984, Indiana submitted a visible emission limit on coke oven battery doors and a limit on total dissolved solids content of coke quench makeup water for Battery Number One at Citizens Gas and Coke Utility in Marion County. These limits are disapproved because they are impermissible relaxations of requirements for each new major stationary sources, as provided at § 52.21(j)(2) and section 173 of the Clean Air Act. See § 52.770(c)(60).

(l) The revised Porter County TSP plan, as submitted by Indiana on October 15, 1984, is disapproved, because the State did not demonstrate that it assures the attainment and maintenance of the primary TSP NAAQS in Porter County, Indiana. See § 52.770(c)(61).

(m) The Indiana Part D TSP plan is disapproved insofar as it does not contain RACT level opacity limits for certain process fugitive sources in TSP nonattainment areas and, therefore, does not meet the requirements of section 172 of the Clean Air Act.

(n) Approval—On June 23, 1988, and July 17, 1989, the State of Indiana submitted committal SIPs for particulate matter with an aerodynamic diameter equal to or less than 10 micrometers (PM_{10}) for the Group II areas within Marion and Vigo Counties and all of Porter County, respectively. The committal SIPs meet all the requirements identified in the July 1, 1987, promulgation of the SIP requirements for PM_{10} at 52 FR 24681.

(o) Approval—On November 16, 1988 and September 10, 1992, Indiana submitted the following list of control measures for particulate matter (PM) already in its State Implementation Plan as a Group III Plan: 326 IAC 1–3–2, its air monitoring network, its list of possible additional sites for PM, its Prevention of Significant Deterioration rules and the following control measures which are part of 325 IAC: 2, Permit Review Rules; 5–1, Opacity Limitations; 6–1–1 to 6–1–6, Nonattainment Area Limitations; 6–1–8, Dearborn County; 6–1–9, Dubois County; 6–1–12, Marion County; 6–1–13, Vigo County; 6–1–14, Wayne County; 6–1–15, Howard County; 6–1–16, Vandenburgh County; 6–1–17, Clark County; 6–1–18, St. Joseph County; 6–2, Particulate Emissions Limitations for Sources of Indirect Heating; 6–3, Process Operations; 6–4, Fugitive Dust Emissions; 11–1, Existing Foundries; 11–4, Fiberglass Insulation Manufacturing; 11–5, Fluoride Emission Limitations for Existing Primary Aluminum Plants.

(p) Approval—On January 13, 1993, the State of Indiana submitted a particulate matter State Implementation Plan revision for the Vermillion County nonattainment area. Additional information was submitted on February 22, 1993, and April 8, 1993. These materials demonstrate that the plan will provide for attainment of the National ambient air quality standards for particulate matter by December 31, 1994, in accordance with section 189(a)(1)(B) of the Clean Air Act.

(q) Approval—On April 8, 1993, and supplemented on June 17, 1997, the State of Indiana submitted a maintenance plan and a request that sections 15, 16, 21, 22, 27, 28, 33 and 34 of Clinton Township in Vermillion County be redesignated to attainment of the National Ambient Air Quality Standard for particulate matter. The redesignation request and maintenance plan satisfy all applicable requirements of the Clean Air Act.

(r) Approval—EPA is approving the PM_{10} maintenance plan for Lake County that Indiana submitted on September 25, 2002.

(s) *Determination of Attainment*. EPA has determined, as of *November 27, 2009*, that the Chicago-Gary-Lake County, IL-IN $PM_{2.5}$ nonattainment area, which includes Lake and Porter counties in IN, and the Evansville nonattainment area have attained the 1997 $PM_{2.5}$ NAAQS. These determinations, in accordance with 40 CFR 51.1004(c), suspend the requirements for these areas to submit an attainment demonstration, associated reasonably available control measures, reasonable further progress, contingency measures, and other plan elements related to attainment of the standard for as long as the area(s) continue to meet the 1997 $PM_{2.5}$ NAAQS.

(t) *Determination of Attainment*. EPA has determined, as of March 9, 2011, that the Louisville, IN-KY $PM_{2.5}$ nonattainment area has attained the 1997 $PM_{2.5}$ NAAQS. These determinations, in accordance with 40 CFR 51.1004(c), suspend the requirements for this area to submit an attainment demonstration, associated reasonably available control measures, reasonable further progress, contingency measures, and other plan elements related to attainment of the standards for as long as the area continues to meet the 1997 $PM_{2.5}$ NAAQS.

(u) *Disapproval*. EPA is disapproving the portions of Indiana's Infrastructure SIP for the 2006 24-hour $PM_{2.5}$ NAAQS addressing interstate transport, specifically with respect to section 110(a)(2)(D)(i)(I).

(v) Approval—The 1997 annual $PM_{2.5}$ maintenance plans for the following areas have been approved:

(1) The Evansville area (Dubois, Vanderburgh, and Warrick Counties, and portions of Gibson, Pike, and Spencer Counties), as submitted on April 8, 2011. The maintenance plan establishes 2015 motor vehicle emission budgets for the Evansville area of 2628.35 tons per year for NO_X and 57.05 tons per year for $PM_{2.5}$, and 2022 motor vehicle emission budgets of 1869.84 tons per year for NO_X and 53.83 tons per year for $PM_{2.5}$.

(2) The Indianapolis area (Hamilton, Hendricks, Johnson, Marion and Morgan Counties), as submitted on October 20, 2009, and supplemented on May 31, 2011, January 17, 2013, and March 18, 2013. The maintenance plan establishes 2015 motor vehicle emissions budgets for the Indianapolis area of 853.76 tpy for primary $PM_{2.5}$ and 25,314.49 tpy for NO_X and 2025 motor vehicle emissions budgets of 460.18 tpy for primary $PM_{2.5}$ and 13,368.60 tpy for NO_X.

(3) The Indiana portion of the Cincinnati-Hamilton nonattainment area (Lawrenceburg Township in Dearborn County), as submitted on December 9, 2010. The maintenance plan establishes 2015 motor vehicle emissions budgets for the Ohio and Indiana portions of the Cincinnati-Hamilton area of 1,678.60 tpy for primary $PM_{2.5}$ and 35,723.83 tpy for NO_X and 2021 motor vehicle emissions budgets of 1,241.19 tpy for primary $PM_{2.5}$ and 21,747.71 tpy for NO_X.

(4) Approval—On February 1, 2013, Indiana submitted a request to revise the motor vehicle emission budgets (budgets) in the 1997 annual $PM_{2.5}$ maintenance plan for the Lake and Porter County, Indiana maintenance area. The budgets are being revised with budgets developed with the MOVES2010a model. The 2015 motor vehicle emissions budgets for Lake and Porter County, Indiana are 347.30 tpy $PM_{2.5}$ and 10,486.08

tpy NO_X. The 2025 motor vehicle emissions budgets for the Lake and Porter County area are 188.73 tpy $PM_{2.5}$ and 5,472.34 tpy for NO_X.

(5) Approval—On July 2, 2013 Indiana submitted a request to revise the approved MOBILE6.2 motor vehicle emission budgets (budgets) in the 1997 annual fine particulate matter maintenance plan for the Evansville maintenance area. The budgets are being revised with budgets developed with the MOVES2010a model. The 2015 motor vehicle emissions budgets are 199.93 tpy $PM_{2.5}$ and 5,642.95 tpy NO_X. The 2022 motor vehicle emissions budgets are 100.45 tpy $PM_{2.5}$ and 3,173 tpy NO_X.

(6) Approval—The 1997 annual $PM_{2.5}$ maintenance plan for the Indiana portion of the Louisville (KY-IN) (Madison Township, Jefferson County and Clark and Floyd Counties), has been approved as submitted on June 16, 2011. The maintenance plan establishes 2025 motor vehicle emissions budgets for the Louisville area to be 324.04 tpy for primary $PM_{2.5}$ and 9,311.76 tpy for NO_X.

(w) Approval—The 1997 annual $PM_{2.5}$ comprehensive emissions inventories for the following areas have been approved:

(1) Indiana's 2005 NO_X, directly emitted $PM_{2.5}$, and SO_2 emissions inventory satisfies the emission inventory requirements of section 172(c)(3) for the Evansville area.

(2) Indiana's 2006 NO_X, primary $PM_{2.5}$, and SO_2 emissions inventories and 2007/2008 VOC and ammonia emission inventories, as submitted on October 20, 2009 and supplemented on May 31, 2011 and March 18, 2013, satisfy the emission inventory requirements of section 172(c)(3) of the Clean Air Act for the Indianapolis area.

(3) Indiana's 2005 NO_X, directly emitted $PM_{2.5}$, and SO_2 emissions inventory; and 2007 VOCs and ammonia emissions inventory, satisfy the emissions inventory requirements of section 172(c)(3) for the Cincinnati-Hamilton area.

(4) Indiana's 2005 NO_X, primary $PM_{2.5}$, and SO_2 emissions inventory satisfies the emission inventory requirements of section 172(c)(3) of the Clean Air Act for Lake and Porter Counties.

(5) Indiana's 2008 NO_X, directly emitted $PM_{2.5}$, SO_2, VOC, and ammonia emissions inventory satisfies the emission inventory requirements of section 172(c)(3) for the Louisville area.

(x) *Determination of Attainment.* EPA has determined, as of September 29, 2011, that based upon 2007–2009 air quality data, the Cincinnati-Hamilton, Ohio, Kentucky, and Indiana, nonattainment Area has attained the 1997 annual $PM_{2.5}$ NAAQS. This determination, in accordance with 40 CFR 52.1004(c), suspends the requirements for this Area to submit an attainment demonstration, associated reasonably available control measures, a reasonable further progress plan, contingency measures, and other planning SIPs related to attainment of the standard for as long as this Area continues to meet the 1997 annual $PM_{2.5}$ NAAQS.

(y) Approval-By submittal dated July 3, 2008, Indiana demonstrated satisfaction of the requirements for reasonably available control measures for its portion of the Cincinnati-Hamilton OH-KY-IN area.

[37 FR 15084, July 27, 1972]

EDITORIAL NOTE: For FEDERAL REGISTER citations affecting § 52.776, see the List of CFR Sections Affected, which appears in the Finding Aids section of the printed volume and at *www.fdsys.gov*.

§ 52.777 Control strategy: photochemical oxidants (hydrocarbons).

(a) The requirements of subpart G of this chapter are not met because the plan does not provide for attainment and maintenance of the national standards for photochemical oxidants (hydrocarbons) in the Metropolitan Indianapolis Intrastate Region by May 31, 1975.

(b) The requirements of subpart G are not met by Revised APC–15 (November 8, 1974 submission) because it does not provide for attainment and maintenance of the photochemical oxidant (hydrocarbon) standards throughout Indiana.

(c) Part D—Conditional approval—The 1979 Indiana plan for Clark, Floyd, Elkhart, Lake, Marion, Porter, and St. Joseph Counties is approved provided the following conditions are satisfied:

(1) The plan for stationary source volatile organic compound control must contain the following:

(i)–(iv) [Reserved]

(v) For regulation 325 IAC 8–5, Section 6, Perchloroethylene Dry Cleaning, the State must conduct a study to demonstrate that the 1,500 gallons exemption meets RACT requirements and submit the results to EPA within 6 months of the effective date of final rulemaking on 325 IAC 8 for VOC from Group II CTG source categories. If the demonstrated emissions resulting from the State's exemption are not essentially equivalent to those resulting from the RACT requirements, then the State must submit to EPA by July 1, 1983, a rule which requires control of emissions from dry cleaning sources using less than 1,500 gallons of perchloroethylene per year.

(2) The stationary source volatile organic control measures submitted by the State on October 23, 1990, and August 19, 1991, are approved as described in 40 CFR 52.770(c)(87) with the exception of 326 IAC 8–5–4 Pneumatic Rubber Tire Manufacturing, on which USEPA has taken no action. It should be noted that although the State's control measures provide that equivalent test methods, alternative emission controls, and revisions in rule applicability must be submitted to the USEPA as proposed revisions to the State Implementation Plan (SIP), such proposed SIP revisions are not part of the SIP unless and until they are approved as such by the USEPA.

(d) Part D—Disapproval. The 1982 Indiana plan for Lake and Porter County is disapproved because it does not assure the attainment and maintenance of the NAAQS there. See §§ 52.770(c)(69) and 52.773(i). The disapproval does not affect USEPA's approval (or conditional approval) of individual parts of Indiana's ozone plan and they remain approved.

(e) Approval—The Administrator approves the incorporation of the photochemical assessment ambient monitoring system submitted by Indiana on November 15, 1993, into the Indiana State Implementation Plan. This submittal satisfies 40 CFR 58.20(f), which requires the State to provide for the establishment and maintenance of photochemical assessment monitoring stations (PAMS) by November 12, 1993.

(f) *Approval.* The Indiana Department of Environmental Management submitted two ozone redesignation requests and maintenance plans requesting the ozone nonattainment areas to be redesignated to attainment for ozone: South Bend/Elkhart (St. Joseph and Elkhart Counties), submitted on September 22, 1993; Indianapolis (Marion County), submitted on November 12, 1993. The redesignation requests and maintenance plans meet the redesignation requirements in section 107(d)(3)(d) of the Act as amended in 1990. The redesignations meet the Federal requirements of section 182(a)(1) of the Clean Air Act as a revision to the Indiana Ozone State Implementation Plan for the above mentioned counties.

(g) The base year ozone precursor emission inventory requirement of section 182(a)(1) of the Clean Air Act, as amended in 1990, has been satisfied for the following areas: Vanderburgh County in the Evansville Metropolitan Area; Marion County in the Indianapolis Metropolitan Area; and St. Joseph and Elkhart Counties in the South Bend Metropolitan Area.

(h) On November 17, 1993, Indiana submitted two of three elements required by section 182(d)(1)(A) of the Clean Air Amendments of 1990 to be incorporated as part of the vehicle miles traveled (VMT) State Implementation Plan intended to offset any growth in emissions from a growth in vehicle miles traveled. These elements are the offsetting of growth in emissions attributable to growth in VMT which was due November 15, 1992, and, any transportation control measures (TCMs) required as part of Indiana's 15 percent reasonable further progress (RFP) plan which was due November 15, 1993. Indiana satisfied the first requirement by projecting emissions from mobile sources and demonstrating that no increase in emissions would take place. Indiana satisfied the second requirement by determining that no TCMs were required as part of Indiana's 15 percent RFP plan.

(i) Approval—EPA is approving the section 182(f) oxides of nitrogen (NO_X) reasonably available control technology (RACT), new source review (NSR), vehicle inspection/maintenance (I/M), and general conformity exemptions for the Indiana portion of the Chicago-Gary-Lake County severe

ozone nonattainment area as requested by the States of Illinois, Indiana, Michigan, and Wisconsin in a July 13, 1994 submittal. This approval does not cover the exemption of NO_X transportation conformity requirements of section 176(c) for this area. Approval of these exemptions is contingent on the results of the final ozone attainment demonstration expected to be submitted in mid-1997. The approval will be modified if the final attainment demonstration demonstrates that NO_X emission controls are needed in the nonattainment area to attain the ozone standard in the Lake Michigan Ozone Study modeling domain.

(j) The base year ozone precursor emission inventory requirement of section 182(a)(1) of the Clean Air Act, as amended in 1990, has been satisfied for Lake and Porter Counties, Indiana.

(k) On June 26, 1995, and June 13, 1997, Indiana submitted a 15 percent rate-of-progress plan for the Lake and Porter Counties portion of the Chicago-Gary-Lake County ozone nonattainment area. This plan satisfies the counties' requirements under section 182(b)(1) of the Clean Air Act, as amended in 1990.

(l) [Reserved]

(m) On July 12, 1995, Indiana submitted a 15 percent rate-of-progress plan for the Clark and Floyd Counties portion of the Louisville ozone nonattainment area. This plan satisfies Clark and Floyd Counties' requirements under section 182(b) of the Clean Air Act, as amended in 1990.

(n) On July 12, 1995, Indiana submitted corrections to the 1990 base year emissions inventory for Clark and Floyd Counties. The July 12, 1995, corrections are recognized revisions to Indiana's emissions inventory.

(o) On July 12, 1995, Indiana submitted as a revision to the Indiana State Implementation Plan a ride-sharing transportation control measure which affects commuters in Clark and Floyd Counties.

(p) On August 26, 1996, Indiana submitted a rule for the purpose of meeting oxides of nitrogen (NO_X) reasonably available control technology (RACT) requirements under section 182(f) of the Clean Air Act (Act) for the Clark and Floyd Counties moderate ozone nonattainment area. The rule's NO_X control requirements meets RACT for major sources of portland cement kilns, electric utility boilers, and industrial, commercial, or institutional boilers. In addition, on April 30, 1997, Indiana certified to the satisfaction of the United States Environmental Protection Agency that, to the best of the State's knowledge, there are no remaining major sources of NO_X in Clark and Floyd Counties which need RACT rules. Indiana, therefore, has satisfied the NO_X RACT requirements under section 182(f) of the Act for the Clark and Floyd Counties ozone nonattainment area.

(q) Approval—On February 5, 1997, Indiana submitted a transportation control measure under section 108(f)(1)(A) of the Clean Air Amendments of 1990 for Vanderburgh County, Indiana to aid in reducing emissions of precursors of ozone. The transportation control measure being approved as a revision to the ozone state implementation plan is the conversion of at least 40 vehicles from gasoline as a fuel to compressed natural gas.

(r) Indiana's November 15, 1996, request for a 1-year attainment date extension for the Indiana portion of the Louisville moderate ozone nonattainment area which consists of Clark and Floyd Counties is approved. The date for attaining the ozone standard in these counties is November 15, 1997.

(s) Approval—On November 4, 1993, the State of Indiana submitted a maintenance plan and a request that Vanderburgh County be redesignated to attainment of the 1-hour National Ambient Air Quality Standard for ozone. The redesignation request and maintenance plan meet the redesignation requirements in section 107(d)(3)(E) of the Clean Air Act as amended in 1990. The redesignation meets the Federal requirements of section 182(a)(1) of the Clean Air Act as a revision to the Indiana ozone State Implementation Plan.

(t) Approval—On May 24, 1996, the Indiana Department of Environmental Management submitted a revision to the ozone State Implementation Plan

for Lake and Porter Counties. The submittal pertained to a plan for the implementation of the Federal transportation conformity requirements in accordance with 40 CFR part 51 subpart T—Conformity to State or Federal Implementation Plans of Transportation Plans, Programs, and Projects Developed, Funded or Approved Under Title 23 U.S.C. or the Federal Transit Act.

(u) On December 17, 1997, and January 22, 1998, Indiana submitted the Post-1996 rate-of-progress plan for the Lake and Porter Counties portion of the Chicago-Gary-Lake County ozone nonattainment area. This plan satisfies the counties' requirements under section 182(c)(2)(B) of the Clean Air Act, as amended in 1990. The plan contains a 1999 mobile source vehicle emission budget for volatile organic compounds of 40,897 pounds per average summer day.

(v) Negative declarations—Aerospace coating operations, industrial clean up solvents, industrial wastewater processes, offset lithography operations, business plastics, automotive plastics, and synthetic organic chemical manufacturing industries (SOCMI) batch processes, reactors and distillation units categories. On November 8, 1999, the State of Indiana certified to the satisfaction of the Environmental Protection Agency that no major sources categorized as part of the nine categories listed above and have a potential to emit 100 tons or more of volatile organic compounds annually are located in Clark or Floyd Counties in southeast Indiana, adjacent to Louisville, Kentucky.

(w) Negative declarations—Aerospace coating operations, industrial clean up solvents, industrial wastewater processes, offset lithography operations, business plastics, automotive plastics, and synthetic organic chemical manufacturing industries (SOCMI) batch processes, reactors and distillation units categories. On November 8, 1999, and January 10, 2000, the State of Indiana certified to the satisfaction of the Environmental Protection Agency that no major sources categorized as part of the nine categories listed above and have a potential to emit 25 tons or more of volatile organic compounds annually are located in Lake or Porter Counties in northwest Indiana.

(x) The request submitted by Indiana on April 11, 2001 and supplemented on August 24, 2001, to redesignate the Indiana portion of the Louisville moderate interstate ozone nonattainment area from nonattainment to attainment was approved on October 23, 2001. The motor vehicle emissions budgets for VOC and NO_X in the Indiana portion of the Louisville moderate interstate maintenance plan are adequate for conformity purposes and approvable as part of the maintenance plan. The 1-hour ozone standard maintenance plan motor vehicle emission budgets for the entire interstate Louisville area for the purposes of transportation conformity are now 48.17 tons per summer day of VOC and 92.93 tons per summer day of NO_X for the year 2012.

(y) Lake and Porter Counties Attainment Demonstration Approval—On December 21, 2000, Indiana submitted a 1-hour ozone attainment demonstration plan as a requested revision to the Indiana State Implementation Plan. This approval includes: A modeled demonstration of attainment, a plan to reduce ozone precursor emissions by 3 percent per year from 2000 to 2007, and associated conformity budgets for 2002 and 2005, a revision to the NO_X waiver, a contingency measures plan for both the ozone attainment demonstration and the post-1999 ROP plan, the conformity budgets for the 2007 attainment year, until such time that revised budgets are submitted and found adequate for conformity purposes as called for by the state in its commitment to recalculate and apply a revised budget for conformity within two years of the formal release of MOBILE6, the RACM analysis, the commitment to conduct a mid-course review of the attainment status of the Lake Michigan area, and an agreed order between U.S. Steel (currently USX Corporation) and the IDEM signed by IDEM on March 22, 1996, which requires U.S. Steel to establish a coke plant process water treatment plant at its Gary Works. Today's action finalizes approval of Indiana's 1-hour ozone attainment demonstration SIP revision.

(z) EPA is approving a revision to the Indiana SIP submitted by Indiana on

June 26, 2003. The revision is for transportation conformity budgets for the Clark and Floyd portion of the Louisville area. The revised 2012 motor vehicle emission budgets (MVEBs) for the total Louisville area are 47.28 tons per day (tpd) for volatile organic compounds (VOC) and 111.13 tpd for oxides of nitrogen.

(aa) Approval—On August 6, 2004, Indiana submitted a revision to the 1-hour ozone attainment plan for Lake and Porter Counties. The revision consists of new motor vehicle emission estimates and new MOBILE6 based motor vehicle emissions budgets. The motor vehicle emissions budget for volatile organic compounds (VOCs) for Lake and Porter Counties, Indiana for the 2005 interim Rate of Progress year is now 15.18 tons per summer day (tpd). The 2007 motor vehicle emissions budgets for the Lake and Porter Counties, Indiana are now 12.37 tpd VOC and 63.33 tpd oxides of nitrogen.

(bb)(1) Approval—On July 15, 2005, Indiana submitted requests to redesignate Greene and Jackson Counties to attainment of the 8-hour ozone National Ambient Air Quality Standard. These requests were supplemented with submittals dated September 6, 2005, September 7, 2005, October 6, 2005, and October 20, 2005. As part of the redesignation requests, the State submitted maintenance plans as required by section 175A of the Clean Air Act. Elements of the section 175 maintenance plan include a contingency plan and an obligation to submit a subsequent maintenance plan revision in 8 years as required by the Clean Air Act. Also included were motor vehicle emission budgets for use to determine transportation conformity in Greene and Jackson Counties. The 2015 motor vehicle emission budgets for Greene County are 1.46 tpd for VOC and 1.54 tpd for NO_X. The 2015 motor vehicle emission budgets for Jackson County are 1.65 tpd for VOC and 3.18 tpd for NO_X.

(2) Approval—On July 8, 2013, Indiana submitted a request to revise the approved MOBILE6.2 motor vehicle emission budgets (budgets) in the 1997 8-hour ozone maintenance plan for the Greene County, Indiana area. The budgets are being revised with budgets developed with the MOVES2010a model. The 2015 budgets for Greene County, Indiana are 0.90 tons per day VOC and 2.31 tons per day NO_X.

(cc)(1) Approval—On August 25, 2005, Indiana submitted a request to redesignate Delaware County to attainment of the 8-hour ozone National Ambient Air Quality Standard. This request was supplemented with a submittal dated October 20, 2005. As part of the redesignation request, the State submitted a maintenance plan as required by section 175A of the Clean Air Act. Elements of the section 175 maintenance plan include a contingency plan and an obligation to submit a subsequent maintenance plan revision in 8 years as required by the Clean Air Act. Also included were motor vehicle emission budgets for use to determine transportation conformity in Delaware County. The 2015 motor vehicle emission budgets for Delaware County are 3.50 tons per day for VOC and 4.82 tons per day for NO_X.

(2) Approval—On August 17, 2012, Indiana submitted a request to revise the approved MOBILE6.2 motor vehicle emission budgets (budgets) in the 1997 8-hour ozone maintenance plan for the Delaware County (Muncie), Indiana area. The budgets are being revised with budgets developed with the MOVES2010a model. The 2015 budgets for Delaware County, Indiana are 2.53 tons per day volatile organic compounds (VOCs) and 7.02 tons per day nitrogen oxides (NO_X).

(dd)(1) Approval—On July 5, 2005, Indiana submitted a request to redesignate Vigo County to attainment of the 8-hour ozone National Ambient Air Quality Standard. This request was supplemented with submittals dated October 20, 2005 and November 4, 2005. As part of the redesignation request, the State submitted a maintenance plan as required by section 175A of the Clean Air Act. Elements of the section 175 maintenance plan include a contingency plan and an obligation to submit a subsequent maintenance plan revision in 8 years as required by the Clean Air Act. Also included were motor vehicle emission budgets for use to determine transportation conformity in Vigo County. The 2015 motor vehicle emission budgets are 2.84 tons per day for VOC and 3.67 tons per day for NO_X.

(2) Approval—On July 2, 2013, Indiana submitted a request to revise the approved MOBILE6.2 motor vehicle emission budgets (budgets) in the 1997 8-hour ozone maintenance plan for the Vigo County, Indiana area. The budgets are being revised with budgets developed with the MOVES2010a model. The 2015 budgets for Vigo County, Indiana are 2.17 tons per day VOC and 5.07 tons per day NO_X.

(ee)(1) Approval—On June 2, 2005, Indiana submitted a request to redesignate Vanderburgh and Warrick Counties to attainment of the 8-hour ozone National Ambient Air Quality Standard. This request was supplemented with a submittal dated October 20, 2005. As part of the redesignation request, the State submitted a maintenance plan as required by section 175A of the Clean Air Act. Elements of the section 175 maintenance plan include a contingency plan and an obligation to submit a subsequent maintenance plan revision in 8 years as required by the Clean Air Act. Also included were motor vehicle emission budgets for use to determine transportation conformity in Vanderburgh and Warrick Counties. The 2015 motor vehicle emission budgets are 4.20 tons per day for VOC and 5.40 tons per day for NO_X for both counties combined.

(2) Approval—On July 2, 2013, Indiana submitted a request to revise the approved MOBILE6.2 motor vehicle emission budgets (budgets) in the 1997 8-hour ozone maintenance plan for the Vanderburgh and Warrick Counties, Indiana area. The budgets are being revised with budgets developed with the MOVES2010a model. The 2015 budgets for Vanderburgh and Warrick Counties, Indiana are 5.02 tons per day VOC and 12.61 tons per day NO_X.

(ff)(1) Approval—On May 30, 2006, Indiana submitted a request to redesignate Allen County to attainment of the 8-hour ozone National Ambient Air Quality Standard. As part of the redesignation request, the State submitted a maintenance plan as required by section 175A of the Clean Air Act. Elements of the section 175 maintenance plan include a contingency plan and an obligation to submit a subsequent maintenance plan revision in eight years as required by the Clean Air Act. Also included were motor vehicle emission budgets to determine transportation conformity in Allen County. The 2020 motor vehicle emission budgets are 6.5 tons per day for VOC and 7.0 tons per day for NO_X.

(2) Approval—On July 2, 2013, Indiana submitted a request to revise the approved MOBILE6.2 motor vehicle emission budgets (budgets) in the 1997 8-hour ozone maintenance plan for the Allen County, Indiana area. The budgets are being revised with budgets developed with the MOVES2010a model. The 2020 budgets for Allen County, Indiana are 4.52 tons per day VOC and 9.72 tons per day NO_X.

(gg) Approval—On May 30, 2006, Indiana submitted a request to redesignate LaPorte County to attainment of the 8-hour ozone National Ambient Air Quality Standard. As part of the redesignation request, the State submitted a maintenance plan as required by section 175A of the Clean Air Act. Elements of the section 175 maintenance plan include a contingency plan and an obligation to submit a subsequent maintenance plan revision in eight years as required by the Clean Air Act. The maintenance plan establishes 2020 motor vehicle emission budgets for LaPorte County of 3.40 tons per day for volatile organic compounds (VOC) and 6.50 tons per day for oxides of nitrogen (NO_X).

(hh)(1) Approval—On May 30, 2006, Indiana submitted a request to redesignate St. Joseph and Elkhart Counties to attainment of the 8-hour ozone National Ambient Air Quality Standard. As part of the redesignation request, the State submitted a maintenance plan as required by section 175A of the Clean Air Act. Elements of the section 175 maintenance plan include a contingency plan and an obligation to submit a subsequent maintenance plan revision in eight years as required by the Clean Air Act. Also included were motor vehicle emission budgets to determine transportation conformity in St. Joseph and Elkhart Counties. The 2020 motor vehicle emission budgets are 6.64 tons per day for volatile organic compounds and 7.73 tons per day for oxides of nitrogen.

(2) Approval—On August 17, 2012, Indiana submitted a request to revise the

approved MOBILE6.2 motor vehicle emission budgets (budgets) in the 1997 8-hour ozone maintenance plan for the South Bend/Elkhart, Indiana area. The budgets are being revised with budgets developed with the MOVES2010a model. The 2020 budgets for South Bend/Elkhart, Indiana are 6.73 tons per day volatile organic compounds (VOCs) and 13.95 tons per day nitrogen oxides (NO_X).

(ii) Approval—On November 15, 2006, Indiana submitted a request to redesignate the Indiana portion of the Louisville 8-hour ozone nonattainment area (Clark and Floyd Counties) to attainment of the 8-hour ozone National Ambient Air Quality Standard. As part of the redesignation request, the State submitted a maintenance plan as required by section 175A of the Clean Air Act. Elements of the section 175 maintenance plan include a contingency plan and an obligation to submit a subsequent maintenance plan revision in eight years as required by the Clean Air Act. Also included were motor vehicle emission budgets to determine transportation conformity for the entire Louisville area. The 2003 and 2020 motor vehicle emission budgets are 40.97 tons per day for VOC and 95.51 tons per day for NO_X, and 22.92 tons per day for VOC and 29.46 tons per day for NO_X, respectively.

(jj)(1) Approval—On March 26, 2007, Indiana submitted a request to redesignate Boone, Hamilton, Hancock, Hendricks, Johnson, Madison, Marion, Morgan, and Shelby Counties (the Central Indiana Area) (Indianapolis ozone nonattainment area) to attainment of the 8-hour ozone National Ambient Air Quality Standard. As part of the redesignation request, the State submitted an ozone maintenance plan as required by section 175A of the Clean Air Act. Part of the section 175A maintenance plan includes a contingency plan. The ozone maintenance plan establishes 2006 motor vehicle emission budgets for the Central Indiana Area of 54.32 tons per day for volatile organic compounds (VOC) and 106.19 tons per day for nitrogen oxides (NO_X) and 2020 motor vehicle emission budgets for the Central Indiana Area of 29.52 tons per day for VOC and 35.69 tons per day for NO_X.

(2) Approval—On April 16, 2012, Indiana submitted a request to revise the approved MOBILE6.2 motor vehicle emission budgets (budgets) in the 1997 8-hour ozone maintenance plan for the Central Indiana area. The budgets are being revised with budgets developed with the MOVES2010a model. The 2006 budgets for Central Indiana are 64.32 tons per day volatile organic compounds (VOCs) and 210.93 tons per day nitrogen oxides (NO_X) and 2020 budgets are 25.47 tons per day VOCs and 69.00 tons per day of NO_X.

(kk) Approval—On October 25, 2007, the Indiana Department of Environmental Management (IDEM) requested that EPA find that the Indiana portion of the Chicago-Gary-Lake County, IL-IN nonattainment area, has attained the revoked 1-hour ozone NAAQS. After review of this submission, EPA approves this finding.

(ll) Lake/Porter Co 8-hr Ozone NO_X Waiver—On June 5, 2009, the Indiana Department of Environmental Management (IDEM) requested that EPA grant a waiver from the Clean Air Act requirement for Nitrogen Oxides (NO_X) Reasonably Available Control Technology (RACT) in Lake and Porter Counties. After review of this submission, EPA approves and grants this NO_X RACT waiver to Lake and Porter Counties.

(mm) Lake/Porter Co 8-hr Ozone Finding of Attainment—On June 5, 2009, the Indiana Department of Environmental Management (IDEM) requested that EPA find that the Indiana portion of the Chicago-Gary-Lake County, Illinois-Indiana (IL-IN) ozone nonattainment area has attained the 1997 8-hour ozone National Ambient Air Quality Standard (NAAQS). After review of this submission and 2006–2008 ozone air quality data for this ozone nonattainment area, EPA finds that Lake and Porter Counties and the entire Chicago-Gary-Lake County, IL-IN area have attained the 1997 8-hour ozone NAAQS.

(nn) Approval—Indiana's 2002 inventory satisfies the base year emissions inventory requirements of section 172(c)(3) of the Clean Air Act for the Indiana portion of the Cincinnati-Hamilton, OH–KY–IN area under the 1997 8-hour ozone standard.

(oo)(1) Approval—On January 21, 2010, the Indiana Department of Environmental Management submitted a request to redesignate the Indiana portion of the Cincinnati-Hamilton, OH–KY–IN area to attainment of the 8-hour ozone NAAQS. As part of the redesignation request, the State submitted a maintenance plan as required by section 175A of the Clean Air Act. Elements of the section 175 maintenance plan include a contingency plan and an obligation to submit a subsequent maintenance plan revision in 8 years as required by the Clean Air Act. The 2015 motor vehicle emissions budgets for the Ohio and Indiana portions of the Cincinnati-Hamilton, OH–KY–IN area are 31.73 tpd for VOC and 49.00 tpd for NO_X. The 2020 motor vehicle emissions budgets for the Ohio and Indiana portions of the area are 28.82 tpd for VOC and 34.39 tpd for NO_X.

(2) Approval—On December 11, 2012, Indiana submitted a request to revise the approved MOBILE6.2 motor vehicle emission budgets (budgets) in the 1997 8-hour ozone maintenance plan for the Indiana portion of the Cincinnati-Hamilton, OH–KY–IN maintenance area. The budgets are being revised with budgets developed with the MOVES2010a model. The 2015 motor vehicle emissions budgets for the Ohio and Indiana portions are 56.06 tpd VOC and 94.25 tpd NO_X. The 2020 motor vehicle emissions budgets for the Ohio and Indiana portions of the area are 42.81 tpd VOC and 73.13 tpd for NO_X.

(pp)(1) Approval—On June 5, 2009, the Indiana Department of Environmental Management submitted a request to redesignate Lake and Porter Counties to attainment of the 1997 8-hour ozone NAAQS. As part of the redesignation request, the State submitted a maintenance plan as required by section 175A of the Clean Air Act. Elements of the section 175A maintenance plan include a contingency plan and an obligation to submit a subsequent maintenance plan revision in 8 years, as required by the Clean Air Act. The 2010 motor vehicle emissions budgets for Lake and Porter Counties are 10.5 tpd for VOC and 40.6 tpd for NO_X. The 2020 motor vehicle emissions budgets for Lake and Porter Counties are 6.0 tpd for VOC and 12.6 tpd for NO_X.

(2) Approval—On February 1, 2013, Indiana submitted a request to revise the motor vehicle emission budgets (budgets) in the 1997 8-hour ozone maintenance plan for the Lake and Porter County, Indiana maintenance area. The budgets are being revised with budgets developed with the MOVES2010a model. The 2010 motor vehicle emissions budgets for Lake and Porter County, Indiana are 13.99 tpd VOC and 47.26 tpd NO_X. The 2020 motor vehicle emissions budgets for the Lake and Porter County area are 5.99 tpd VOC and 16.69 tpd for NO_X.

(qq) Approval—Indiana's 2002 VOC and NO_X emissions inventories satisfy the emission inventory requirements of section 182(a)(1) of the Clean Air Act for Lake and Porter Counties under the 1997 8-hour ozone NAAQS.

(rr) Approval—EPA is approving a request submitted by the State of Indiana on October 10, 2006, and supplemented on November 15, 2006, November 29, 2007, November 25, 2008, April 23, 2010 and November 19, 2010, to discontinue the vehicle inspection and maintenance (I/M) program in Clark and Floyd Counties. The submittal also includes Indiana's demonstration that eliminating the I/M programs in Clark and Floyd Counties will not interfere with the attainment and maintenance of the ozone NAAQS and the fine particulate NAAQS and with the attainment and maintenance of other air quality standards and requirements of the CAA. We are further approving Indiana's request to modify the SIP such that I/M is no longer an active program in these areas and is instead a contingency measure in this area's maintenance plan.

(ss) *Disapproval.* EPA is disapproving Indiana's December 5, 2012, ozone redesignation request for Lake and Porter Counties for the 2008 ozone standard. EPA is also disapproving Indiana's motor vehicle emission budgets and ozone maintenance plan submitted with the redesignation request.

(tt) *Determination of attainment.* As required by section 181(b)(2)(A) of the Clean Air Act, the EPA has determined that the Cincinnati, OH-KY-IN Marginal 2008 ozone nonattainment area has attained the 2008 ozone NAAQS by

the applicable attainment date of July 20, 2015.

(uu) Approval—On February 23, 2016, the Indiana Department of Environmental Management submitted a request to redesignate the Indiana portion of the Cincinnati, OH–KY–IN area to attainment of the 2008 ozone NAAQS. As part of the redesignation request, the State submitted a maintenance plan as required by section 175A of the Clean Air Act. Elements of the section 175 maintenance plan include a contingency plan and an obligation to submit a subsequent maintenance plan revision in 8 years as required by the Clean Air Act. The 2020 motor vehicle emissions budgets for the Indiana and Ohio portions of the Cincinnati, OH–KY–IN area are 30.02 tons per summer day (TPSD) for VOC and 30.79 TPSD for NO_X. The 2030 motor vehicle emissions budgets for the Indiana and Ohio portions of the area are 18.22 TPSD for VOC and 16.22 TPSD for NO_X.

(vv) On June 15, 2016, Indiana submitted 2011 volatile organic compounds and oxides of nitrogen emissions inventories for the Indiana portion of the Chicago-Naperville, Illinois-Indiana-Wisconsin nonattainment area for the 2008 ozone national ambient air quality standard as a revision of the Indiana state implementation plan. The documented emissions inventories are approved as a revision of the state's implementation plan.

(ww) On June 15, 2016, Indiana submitted a certification that sources of volatile organic compounds or oxides of nitrogen located in Lake and Porter Counties are required to annually submit statements documenting these emissions to the state. This certification is approved as a revision to the state's implementation plan.

[38 FR 16565, June 22, 1973]

EDITORIAL NOTE: For FEDERAL REGISTER citations affecting § 52.777, see the List of CFR Sections Affected, which appears in the Finding Aids section of the printed volume and at *www.fdsys.gov*.

§ 52.778 Compliance schedules.

(a) The requirements of § 51.262(a) of this chapter are not met since the compliance schedules for sources of nitrogen oxides extend over a period of more than 18 months and periodic increments of progress are not included.

(b)–(c) [Reserved]

(d) The compliance schedule for the source identified below is disapproved as not meeting the requirements of subpart N of this chapter. All regulations cited are air pollution control regulations of the State, unless otherwise noted.

Source	Location	Regulation involved	Date schedule adopted
LAKE COUNTY			
Commonwealth Edison Co. of Indiana, Inc. (State Line Station).	Hammond	APC 13	Jan. 18, 1973.

[38 FR 12698 May 14, 1973, as amended at 39 FR 28158, Aug. 5, 1974; 51 FR 40675, 40676, 40677, Nov. 7, 1986; 54 FR 25258, June 14, 1989]

§ 52.779 [Reserved]

§ 52.780 Review of new sources and modifications.

(a) The requirements of § 51.160(a) of this chapter are not met in that the plan does not contain procedures to enable the State to determine whether construction or modification of coal burning equipment having a heat input of between 350,000 Btu per hour and 1,500,000 Btu per hour will result in violations of applicable portions of the control strategy and section 4(a)(2)(iii) of APC–19 is disapproved to the extent that it exempts coal burning equipment having a heat input of between 350,000 Btu per hour and 1,500,000 Btu per hour from pre-construction/modification review.

(b)–(c) [Reserved]

(d) Limited regulation for the review of new sources and modifications. (1) This requirement is applicable to any coal burning equipment other than smokehouse generators, having a heat

input of between 350,000 Btu per hour (88.2 Mg-cal/h) and 1,500,000 Btu per hour (378.0 MG cal/h), the construction of which was commenced after May 14, 1973.

(2) No owner or operator shall commence construction or modification of any coal burning equipment subject to this regulation without first obtaining approval from the Administrator of the location and design of such source.

(i) Application for approval to construct or modify shall be made on forms furnished by the Administrator,

(ii) A separate application is required for each source.

(iii) Each application shall be signed by the applicant.

(iv) Each application shall be accompanied by site information, plans, descriptions, specifications, and drawings showing the design of the source, the nature and amount of emissions, and the manner in which it will be operated and controlled.

(v) Any additional information, plans, specifications, evidence, or documentation that the Administrator may require shall be furnished upon request.

(3) No approval to construct or modify will be granted unless the applicant shows to the satisfaction of the Administrator that:

(i) The source will operate without causing a violation of any local, State, or Federal regulation which is part of the applicable plan; and

(ii) The source will not prevent or interfere with attainment or maintenance of any national standard.

(4) (i) Within twenty (20) days after receipt of an application to construct, or any addition to such application, the Administrator shall advise the owner or operator of any deficiency in the information submitted in support of the application. In the event of such a deficiency, the date of receipt of the application for the purpose of paragraph (d)(4)(ii) of this section, shall be the date on which all required information is received by the Administrator.

(ii) Within thirty (30) days after receipt of a complete application, the Administrator shall:

(*a*) Make a preliminary determination whether the source should be approved, approved with conditions, or disapproved.

(*b*) Make available in at least one location in each region in which the proposed source would be constructed, a copy of all materials submitted by the owner or operator, a copy of the Administrator's preliminary determination and a copy or summary of other materials, if any, considered by the Administrator in making his preliminary determination; and

(*c*) Notify the public, by prominent advertisement in a newspaper of general circulation in each region in which the proposed source would be constructed, of the opportunity for written public comment on the information submitted by the owner or operator and the Administrator's preliminary determination on the approvability of the source.

(iii) A copy of the notice required pursuant to this paragraph shall be sent to the applicant and to state and local air pollution control agencies, having cognizance over the location where the source will be situated.

(iv) Public comments submitted in writing within thirty (30) days after the date such information is made available shall be considered by the Administrator in making his final decision on the application. No later than ten (10) days after the close of the public comment period, the applicant may submit a written response to any comment submitted by the public. The Administrator shall consider the applicant's response in making his final decision. All comments shall be made available for public inspection in at least one location in the region in which the source would be located.

(v) The Administrator shall take final action on an application within thirty (30) days after the close of the public comment period. The Administrator shall notify the applicant in writing of his approval, conditional approval, or denial of the application, and shall set forth his reasons for conditional approval or denial. Such notification shall be made available for public inspection in at least one location in the region in which the source would be located.

(vi) The Administrator may extend each of the time periods specified in paragraph (d)(4) (ii), (iv) or (v) of this section by no more than 30 days, or

such other period as agreed to by the applicant and the Administrator.

(5) The Administrator may impose any reasonable conditions upon an approval, including conditions requiring the source to be provided with:

(i) Sampling ports of a size, number, and location as the Administrator may require,

(ii) Safe access to each port,

(iii) Instrumentation to monitor and record emission data, and

(iv) Any other sampling and testing facilities.

(6) The Administrator may cancel an approval if the construction is not begun within 2 years from the date of issuance, or if during the construction, work is suspended for 1 year.

(7) Any owner or operator subject to the provisions of this regulation shall furnish the Administrator written notification as follows:

(i) A notification of the anticipated date of initial startup of a source not more than 60 days or less than 30 days prior to such date.

(ii) A notification of the actual date of initial startup of a source within 15 days after such date.

(8) Within 60 days after achieving the maximum production rate at which the source will be operated but not later than 180 days after initial startup of such source, the owner or operator of such source shall conduct a performance test(s) in accordance with methods and under operating conditions approved by the Administrator and furnish the Administrator a written report of the results of such performance test.

(i) Such test shall be at the expense of the owner or operator.

(ii) The Administrator may monitor such test and may also conduct performance tests.

(iii) The owner or operator of a source shall provide the Administrator 15 days prior notice of the performance test to afford the Administrator the opportunity to have an observer present.

(iv) The Administrator may waive the requirement of performance tests if the owner or operator of a source has demonstrated by other means to the Administrator's satisfaction that the source is being operated in compliance with all local, State, and Federal regulations which are part of the applicable plan.

(9) [Reserved]

(10) Approval to construct or modify shall not relieve any owner or operator of the responsibility to comply with all local, State, and Federal regulations which are part of the applicable plan.

(11) Any owner or operator who constructs, modifies, or operates a stationary source not in accordance with the application, as approved and conditioned by the Administrator, or any owner or operator of a stationary source subject to this paragraph who commences construction or modification without applying for and receiving approval hereunder, shall be subject to enforcement action under section 113 of the Act.

(e) The requirements of subpart I of this chapter are not met because the State failed to submit a plan for review of new or modified indirect sources.

(f) Regulation for review of new or modified indirect sources. The provisions of § 52.22(b) are hereby incorporated by reference and made a part of the applicable implementation of the plan for the State of Indiana.

(g) Delegation of authority. (1) The Administrator shall have the authority to delegate responsibility for implementing the procedures for conducting source review pursuant to this section in accordance with paragraphs (f) (2), (3), and (4) of this section.

(2) Where the Administrator delegates the responsibility for implementing the procedures for conducting source review pursuant to this section to any Agency, other than a Regional Office of the Environmental Protection Agency, a copy of the notice pursuant to paragraph (d)(4)(iii) of this section shall be sent to the Administrator through the appropriate Regional Office.

(3) In accordance with Executive Order 11752, the Administrator's authority for implementing the procedures for conducting source review pursuant to this section shall not be delegated, other than to a Regional Office of the Environmental Protection Agency, for new or modified sources which are owned or operated by the Federal Government or for new or modified

sources located on Federal lands; except that, with respect to the latter category, where new or modified sources are constructed or operated on Federal lands pursuant to leasing or other Federal agreements, the Federal Land Manager may at his discretion, to the extent permissible under applicable statutes and regulations, require the lessee or permittee to be subject to new source review requirements which have been delegated to a State or local agency pursuant to this paragraph.

(4) The Administrator's authority for implementing the procedures for conducting source review pursuant to this section shall not be redelegated, other than to a Regional Office of the Environmental Protection Agency, for new or modified sources which are located in Indian reservations except where the State has assumed jurisdiction over such land under other laws, in which case the Administrator may delegate his authority to the States in accordance with paragraphs (g) (2), (3), and (4) of this section.

(h) On March 7, 1994, Indiana requested a revision to the State Implementation Plan (SIP) for New Source Review (NSR) to satisfy the requirements of the Clean Air Act Amendments of 1990. The Indiana 326 IAC regulations do not include a definition of ''federally enforceable''. On July 13, 1994, Pamela Carter, Attorney General of the State of Indiana, sent a letter to USEPA clarifying Indiana's interpretation of the definition of federally enforceable. The letter states that federally enforceable, e.g. as used in 326 IAC 2–3–1, should be interpreted in accordance with the federal definition at 40 CFR 51.165(a)(1)(xiv). The USEPA took the opportunity of rulemaking on the State's submittal to recodify the permitting SIP to conform to Title 326 the Indiana Administrative Code.

[37 FR 10863, May 31, 1972, as amended at 38 FR 12698, May 14, 1973; 39 FR 4663, Feb. 6, 1974; 39 FR 7281, Feb. 25, 1974; 40 FR 50270, Oct. 29, 1975; 51 FR 40677, Nov. 7, 1986; 59 FR 51114, Oct. 7, 1994]

§ 52.781 Rules and regulations.

(a) [Reserved]

(b) A part of the second sentence in section 3, APC–17, which states ''Where there is a violation or potential violation of ambient air quality standards, existing emission sources or any existing air pollution control equipment shall comply with th

(c)–(d) [Reserved]

(e) Section 2(d) of APC–20, Fugitive Dust Emissions, is disapproved because it is unenforceable within the terms of the regulation.

(f) Subsections 3(b)(3) and 3(b)(5) of APC–2 (May 18, 1977) are disapproved because they are unenforceable within the terms of the regulation.

(g) *Disapproval.* EPA is disapproving 326 IAC 25–2–1, 326 IAC 25–2–3 and 326 IAC 25–2–4 as revisions to the Indiana SIP.

(h) *Disapproval.* EPA is disapproving the December 10, 2009 submittal of 326 IAC 7–4–14 as a revision to the Indiana SIP.

[37 FR 10863, May 31, 1972, as amended at 37 FR 15084, July 27, 1972; 38 FR 12698, May 14, 1973; 40 FR 50033, Oct. 28, 1975; 43 FR 26722, June 22, 1978; 75 FR 72965, Nov. 29, 2010; 78 FR 78725, Dec. 27, 2013]

§ 52.782 Request for 18-month extension.

(a) The requirements of § 51.341 of this chapter are not met since the request for an 18-month extension for submitting that portion of the plan that implements the secondary standards for particulate matter in the Metropolitan Indianapolis Intrastate Region does not show that attainment of the secondary standards will require emission reductions exceeding those which can be achieved through the application of reasonably available control technology.

[37 FR 10863, May 31, 1972, as amended at 51 FR 40677, Nov. 7, 1986]

§ 52.783 [Reserved]

§ 52.784 Transportation and land use controls.

(a) To complete the requirements of subpart L and subpart G of this chapter, the Governor of Indiana must submit to the Administrator:

(1) No later than April 15, 1973, transportation and/or land use control strategies and a demonstration that said strategies, along with Indiana's presently adopted stationary source emission limitations for carbon monoxide

and hydrocarbons and the Federal Motor Vehicle Control Program, will attain and maintain the national standards for carbon monoxide and photochemical oxidants (hydrocarbons) in the Metropolitan Indianapolis Intrastate Region by May 31, 1975. By such date (April 15, 1973), the State also must submit a detailed timetable for implementing the legislative authority, regulations, and administrative policies required for carrying out the transportation and/or land use control strategies by May 31, 1975.

(2) No later than July 30, 1973, the legislative authority that is needed for carrying out such strategies.

(3) No later than December 30, 1973, the necessary adopted regulations and administrative policies needed to implement such strategies.

[38 FR 7326, Mar. 20, 1973, as amended at 51 FR 40676, Nov. 7, 1986]

§ 52.785 Control strategy: Carbon monoxide.

(a) The requirements of subpart G of this chapter are not met because the plan does not provide for attainment and maintenance of the national standards for carbon monoxide in the Metropolitan Indianapolis Intrastate Region by May 31, 1975.

(b) On December 21, 1999, the Indiana Department of Environmental Management submitted carbon monoxide maintenance plans for those portions of Lake and Marion Counties which they requested the Environmental Protection Agency redesignate to attainment of the carbon monoxide national ambient air quality standard.

(c) Approval—The Indiana Department of Environmental Management (IDEM) submitted Carbon Monoxide (CO) Limited Maintenance Plan Updates for Lake and Marion Counties on January 12, 2009. The updated Limited Maintenance Plans demonstrate attainment of the CO National Ambient Air Quality Standard (NAAQS) for Lake and Marion Counties for an additional ten years.

[38 FR 16565, June 22, 1973, as amended at 51 FR 40676, Nov. 7, 1986; 65 FR 2888, Jan. 19, 2000; 74 FR 52893, Oct. 15, 2009]

§ 52.786 Inspection and maintenance program.

(a) Definitions:

(1) *Inspection and maintenance program* means a program to reduce emissions from in-use vehicles through identifying vehicles that need emission control related maintenance and requiring that such maintenance be performed.

(2) *Light-duty vehicle* means a motor vehicle rated at 6,000 lb. GVW (gross vehicle weight) or less.

(3) All other terms used in this section that are defined in part 51, subpart G of this chapter, are used herein with the meanings so defined.

(b) This regulation is applicable in the County of Marion, Indiana (including all cities, towns and municipal corporations therein).

(c) The State of Indiana shall establish and cause the implementation of an inspection and maintenance program applicable to all gasoline-powered light duty vehicles which are registered in Marion County. Such program shall conform with this § 52.786. The Consolidated City of Indianapolis, the County of Marion, and other municipalities within the County of Marion, shall take all legislative, executive, or other action necessary to establish and implement the program required by this regulation.

(d) Not later than April 1, 1975, the State of Indiana, the County of Marion and the Consolidated City of Indianapolis shall jointly submit to the Administrator, for his approval, legally adopted legislation and/or regulations establishing the regulatory scheme for the inspection/maintenance program required by paragraph (c) of this section. The legislation and/or regulations shall include:

(1) Provisions requiring inspection of all light-duty motor vehicles subject to the inspection program required by paragraph (c) of this section at periodic intervals no more than 1 year apart by means of an idle test. Any class or category of vehicles that are found to be rarely used on public streets and highways (such as classic or antique vehicles) may be exempted.

(2) Provisions for regulatory criteria that are consistent with achieving an

11 percent reduction of hydrocarbon emissions from light-duty vehicles.

(3) Provisions ensuring that failed vehicles receive, within 30 days, the maintenance necessary to achieve compliance with the inspection standards. These provisions shall impose sanctions against owners of non-complying vehicles, require retest of failed vehicles following maintenance, require a suitable distinctive tag or sticker for display on complying vehicles, and include such other measures as are necessary or appropriate.

(4) Provisions establishing a certification program to ensure that testing stations performing the required tests have the necessary equipment and knowledgeable operators to perform the tests satisfactorily, imposing sanctions against non-complying testing stations, and containing such other measures as necessary or appropriate to a testing program.

(5) Provisions prohibiting vehicles from being intentionally readjusted or modified subsequent to the inspection and/or maintenance in such a way as would cause them no longer to comply with the inspection standards. These may include authorization of spot checks of idle adjustments or of a suitable type of physical seal or tag on vehicles. These provisions shall include appropriate penalties for violation by any person.

(6) Designation of agency or agencies responsible for conducting, overseeing, and enforcing the inspection/maintenance program. Private parties may be designated to conduct parts of the program to certify compliance.

(e) After July 1, 1976, the State of Indiana, County of Marion, the Consolidated City of Indianapolis, and other municipalities in Marion County shall not allow the operation on streets, roads, or highways under their ownership or control of any light duty motor vehicle subject to the inspection program established pursuant to paragraph (c) of this section that does not comply with the applicable standards and procedures adopted in accordance with paragraph (d) of this section.

(f) After July 1, 1976, no person shall operate or allow the operation of any motor vehicle subject to the inspection program established pursuant to paragraph (c) of this section that does not comply with the applicable standards and procedures adopted in accordance with paragraph (d) of this section.

(g) No later than October 1, 1974, the State of Indiana, County of Marion, and the Consolidated City of Indianapolis shall jointly submit to the Administrator, for his approval, a detailed compliance schedule showing the steps they will take to establish, operate and enforce the inspection program required by paragraph (c) of this section including:

(1) A detailed description of the inspection program required by paragraph (c) of this section (including a description of the way in which the program will be established, operated, and enforced and the respective responsibilities of the State, county, and municipalities for such tasks).

(2) A description of the legal authority for establishing and enforcing the inspection/maintenance program, including the text of proposed or adopted legislation and regulations.

(3) Specific dates (day, month, and year) by which various steps to implement the inspection/maintenance system will be completed, such steps to include, at a minimum, the following: submitting final plans and specifications for the system to the Administrator for this approval (this date to be no later than February 1, 1975), ordering necessary equipment (this date to be no later than April 15, 1975), commencement of onsite construction and/or installation, and system operational (this date to be no later than April 15, 1975, commencement of onsite construction and/ior installation, and system operational (this date to be no later than July 1, 1975).

(4) An identification of the sources and amounts of funds necessary to implement the system together with written assurances from the chief executive officers of the State, city, and county that they will seek such necessary funding from the appropriate legislative bodies.

(5) Other provisions necessary or appropriate to carry out the program.

(h) The State's December 2, 1992, commitment to timely adopt and implement enhanced inspection and maintenance (I/M) rules for Lake and

Porter Counties is disapproved based on the failure of the State of Indiana to meet important milestones pertaining to the development and adoption of necessary authority for the I/M program. This disapproval initiates the sanction process of section 179(a) of the Act.

[39 FR 12348, Apr. 5, 1974, as amended at 46 FR 38, Jan. 2, 1981; 51 FR 40677, Nov. 7, 1986; 55 FR 31052, July 31, 1990; 58 FR 62535, Nov. 29, 1993]

§ 52.787 Gasoline transfer vapor control.

(a) *Gasoline* means any petroleum distillate having a Reid vapor pressure of 4 pounds or greater.

(b) This section is applicable in the County of Marion, Indiana (including all cities, towns and municipal corporations therein).

(c) No person shall transfer or permit the transfer of gasoline from any delivery vessel into any stationary source container with a capacity greater than 250 gallons unless such container is equipped with a submerged fill pipe and unless the displaced vapors from the storage container are processed by a control system that prevents release to the atmosphere of no less than 90 percent by weight of organic compounds in said vapors displaced from the stationary storage container location. The control system shall include one or more of the following:

(1) A vapor-tight return line from the storage container to the delivery vessel and a system that will ensure that the vapor return line is connected before gasoline can be transferred into the container. If a ''vapor-balance return'' system is used to meet the requirements of this section, the system shall be so constructed as to be readily adapted to retrofit with an adsorption system, refrigeration-condensation system or equivalent system connected to the stationary storage container.

(2) Refrigeration-condensation system or adsorption system connected to the stationary storage container.

(3) An equivalent system, approved by the Administrator or his designee, designed to recover or eliminate no less than 90 percent by weight of the organic compounds in the displaced vapor.

(d) No person shall own or operate a delivery vessel containing gasoline unless the delivery vessel is so designed and maintained as to be vapor-tight at all times. This paragraph (d) shall not apply to delivery vessels in transit through Marion County which neither are filled nor deliver gasoline therein, nor shall this paragraph (d) be construed to prohibit safety-valves on other devices required by governmental safety regulations. Delivery vessels which are filled in Marion County but do not deliver in Marion County may be controlled only for filling.

(e) No person shall own or operate a facility for the filling of delivery vessels with gasoline unless the facility is equipped with a control system, which can recover or eliminate at least 90 percent by weight of the organic compounds in the vapors displaced from the delivery vessel during refilling. Facilities which have a daily throughput of 20,000 gallons or less are required to have a vapor recovery system in operation no later than May 31, 1977. Delivery vessels and storage containers served exclusively by facilities required to have a vapor recovery system in operation no later than May 31, 1977, also will be required to meet the provisions of this section no later than May 31, 1977.

(f) After March 1, 1976, no person shall intentionally release gasoline vapors from a delivery vessel, except to a control system that can recover or eliminate at least 90 percent by weight of organic compounds in the vapors released.

(g) The provisions of paragraph (c) of this section shall not apply to the following:

(1) Stationary containers having a capacity less than 550 gallons used exclusively for the fueling of farming equipment.

(2) Any stationary container having a capacity less than 2,000 gallons installed prior to promulgation of this paragraph.

(3) Transfer made to storage tanks equipped with floating roofs or their equivalent.

(4) Gasoline storage compartments of 1,000 gallons or less in gasoline delivery vessels in use on the promulgated date

of this regulation will not be required to be retrofitted with a vapor return system until January 1, 1977.

(h) The operation of a source, otherwise, subject to paragraph (c), (d), or (e) of this section, shall not be a violation of paragraph (c), (d), or (e), respectively, if the following acts shall be completed with respect to such source before the following dates:

(1) October 1, 1974. The owner of the source or his designee shall submit to the Administrator, a final control plan, which describes at a minimum the steps that will be taken by the source to achieve compliance with the applicable provisions of paragraphs (c), (d), and (e) of this section.

(2) March 1, 1975. Negotiate and sign all necessary contracts for control systems, or issue orders for the purchase of component parts to accomplish emission control.

(3) May 1, 1975. Initiate on-site construction or installation of control system equipment.

(4) February 1, 1976. Complete on-site construction or installation of control system equipment.

(5) March 1, 1976. Achieve final compliance with the applicable provisions of paragraphs (c), (d), and (e) of this section.

(6) Any owner of a source subject to the compliance schedule in this paragraph shall certify to the Administrator, within 5 days after the deadline for each increment of progress, whether or not the required increment of progress has been met.

(i) As an alternative to compliance with the schedule under paragraph (h) of this section:

(1) The owner of a source which is in compliance with the provisions of paragraph (c), (d), or (e) of this section, shall certify such compliance to the Administrator by October 1, 1974. The Administrator may request whatever supporting information he considers necessary for proper certification.

(2) A source for which a compliance schedule is adopted by the State and approved by the Administrator may operate in conformity with such compliance schedule.

(3) The owner of a source may submit to the Administrator, by October 1, 1974, a proposed alternative compliance schedule. No such schedule may provide for compliance after March 1, 1976. Until promulgated by the Administrator, such source shall conform with applicable portions of paragraph (c), (d), (e), or (h) of this section. Upon promulgation of the compliance schedule by the Administrator, no person shall own or operate the source except in conformity with the promulgated schedule.

(j) Nothing in this section shall preclude the Administrator from promulgating a separate schedule for any source to which the application of the compliance schedule in paragraph (h) of this section fails to satisfy the requirements of § 51.15 (b) and (c) of this chapter.

(k) Any new container, facility, or vessel subject to this regulation that is placed in operation after October 1, 1974, shall within 30 days of commencing operation submit a compliance schedule in conformity with paragraph (i) of this section and shall otherwise comply with this section. Any facility subject to this regulation that is placed in operation after March 1, 1976, shall comply with the applicable requirements of this section immediately upon commencing operation.

[39 FR 12349, Apr. 5, 1974, as amended at 39 FR 41253, Nov. 26, 1974; 41 FR 56643, Dec. 29, 1976; 42 FR 29004, June 7, 1977]

§ 52.788 Operating permits.

Emission limitations and other provisions contained in operating permits issued by the State in accordance with the provisions of the federally approved permit program shall be the applicable requirements of the federally approved State Implementation Plan (SIP) for Indiana for the purpose of sections 112(b) and 113 of the Clean Air Act and shall be enforceable by the United States Environmental Protection Agency (USEPA) and any person in the same manner as other requirements of the SIP. USEPA reserves the right to deem an operating permit not federally enforceable. Such a determination will be made according to appropriate procedures, and be based upon the permit, permit approval procedures or permit requirements which do not conform

with the operating permit program requirements or the requirements of USEPA's underlying regulations.

[60 FR 43012, Aug. 18, 1995]

§ 52.789 Interstate pollutant transport provisions; What are the FIP requirements for decreases in emissions of nitrogen oxides?

(a)(1) The owner and operator of each source and each unit located in the State of Indiana and for which requirements are set forth under the CSAPR NO_X Annual Trading Program in subpart AAAAA of part 97 of this chapter must comply with such requirements. The obligation to comply with such requirements will be eliminated by the promulgation of an approval by the Administrator of a revision to Indiana's State Implementation Plan (SIP) as correcting the SIP's deficiency that is the basis for the CSAPR Federal Implementation Plan under § 52.38(a), except to the extent the Administrator's approval is partial or conditional.

(2) Notwithstanding the provisions of paragraph (a)(1) of this section, if, at the time of the approval of Indiana's SIP revision described in paragraph (a)(1) of this section, the Administrator has already started recording any allocations of CSAPR NO_X Annual allowances under subpart AAAAA of part 97 of this chapter to units in the State for a control period in any year, the provisions of subpart AAAAA of part 97 of this chapter authorizing the Administrator to complete the allocation and recordation of CSAPR NO_X Annual allowances to units in the State for each such control period shall continue to apply, unless provided otherwise by such approval of the State's SIP revision.

(b)(1) The owner and operator of each source and each unit located in the State of Indiana and for which requirements are set forth under the CSAPR NO_X Ozone Season Group 1 Trading Program in subpart BBBBB of part 97 of this chapter must comply with such requirements with regard to emissions occurring in 2015 and 2016.

(2) The owner and operator of each source and each unit located in the State of Indiana and for which requirements are set forth under the CSAPR NO_X Ozone Season Group 2 Trading Program in subpart EEEEE of part 97 of this chapter must comply with such requirements with regard to emissions occurring in 2017 and each subsequent year. The obligation to comply with such requirements will be eliminated by the promulgation of an approval by the Administrator of a revision to Indiana's State Implementation Plan (SIP) as correcting the SIP's deficiency that is the basis for the CSAPR Federal Implementation Plan (FIP) under § 52.38(b), except to the extent the Administrator's approval is partial or conditional, provided that because the CSAPR FIP was promulgated as a partial rather than full remedy for an obligation of the State to address interstate air pollution, the SIP revision likewise will constitute a partial rather than full remedy for the State's obligation unless provided otherwise in the Administrator's approval of the SIP revision.

(3) Notwithstanding the provisions of paragraph (b)(2) of this section, if, at the time of the approval of Indiana's SIP revision described in paragraph (b)(2) of this section, the Administrator has already started recording any allocations of CSAPR NO_X Ozone Season Group 2 allowances under subpart EEEEE of part 97 of this chapter to units in the State for a control period in any year, the provisions of subpart EEEEE of part 97 of this chapter authorizing the Administrator to complete the allocation and recordation of CSAPR NO_X Ozone Season Group 2 allowances to units in the State for each such control period shall continue to apply, unless provided otherwise by such approval of the State's SIP revision.

[76 FR 48364, Aug. 8, 2011, as amended at 81 FR 74586 and 74594, Oct. 26, 2016]

§ 52.790 Interstate pollutant transport provisions; What are the FIP requirements for decreases in emissions of sulfur dioxide?

(a) The owner and operator of each source and each unit located in the State of Indiana and for which requirements are set forth under the CSAPR SO_2 Group 1 Trading Program in subpart CCCCC of part 97 of this chapter must comply with such requirements.

The obligation to comply with such requirements will be eliminated by the promulgation of an approval by the Administrator of a revision to Indiana's State Implementation Plan (SIP) as correcting the SIP's deficiency that is the basis for the CSAPR Federal Implementation Plan under § 52.39 except to the extent the Administrator's approval is partial or conditional.

(b) Notwithstanding the provisions of paragraph (a) of this section, if, at the time of the approval of Indiana's SIP revision described in paragraph (a) of this section, the Administrator has already started recording any allocations of CSAPR SO_2 Group 1 allowances under subpart CCCCC of part 97 of this chapter to units in the State for a control period in any year, the provisions of subpart CCCCC of part 97 of this chapter authorizing the Administrator to complete the allocation and recordation of CSAPR SO_2 Group 1 allowances to units in the State for each such control period shall continue to apply, unless provided otherwise by such approval of the State's SIP revision.

[76 FR 48364, Aug. 8, 2011, as amended at 81 FR 74586, Oct. 26, 2016]

§ 52.791 Visibility protection.

(a) *Regional Haze*. The requirements of section 169A of the Clean Air Act are not met because the regional haze plan submitted by Indiana on January 14, 2011, and supplemented on March 10, 2011, does not include fully approvable measures for meeting the requirements of 40 CFR 51.308(d)(3) and 51.308(e) with respect to emissions of NO_X and SO_2 from electric generating units. EPA has given limited approval and limited disapproval to the plan provisions addressing these requirements.

(b) *Measures Addressing Limited Disapproval Associated with NO_X*. The deficiencies associated with NO_X identified in EPA's limited disapproval of the regional haze plan submitted by Indiana on January 14, 2011, and supplemented on March 10, 2011, are satisfied by § 52.789.

(c) *Measures Addressing Limited Disapproval Associated with SO_2*. The deficiencies associated with SO_2 dentified in EPA's limited disapproval of the regional haze plan submitted by Indiana on January 14, 2011 and supplemented on March 10, 2011 are satisfied by § 52.790.

[77 FR 33657, June 7, 2012]

§ 52.792 [Reserved]

§ 52.793 Significant deterioration of air quality.

(a) The requirements of sections 160 through 165 of the Clean Air Act are not met, since the plan does not include approvable procedures for preventing the significant deterioration of air quality.

(b) *Regulations for preventing significant deterioration of air quality*. The provisions of § 52.21(a)(2) and (b) through (bb) are hereby incorporated and made a part of the applicable state plan for the State of Indiana.

(c) All applications and other information required pursuant to § 52.21 of this part from sources located in the State of Indiana shall be submitted to the state agency, Indiana Department of Environmental Management, Office of Air Quality, 100 North Senate Avenue, Indianapolis, Indiana 46204, rather than to EPA's Region 5 office.

[45 FR 52741, Aug. 7, 1980, as amended at 53 FR 18985, May 26, 1988; 68 FR 11323, Mar. 10, 2003; 75 FR 55275, Sept. 10, 2010]

§ 52.794 Source surveillance.

(a) The requirements of 51.212 of this chapter are not met by the phrase ''for more than a cumulative total of 15 minutes in a 24-hour period'' contained in section 1 of APC–3 of the Indiana Air Pollution Control Regulations.

(b) [Reserved]

(c) 325 IAC 5–1 (October 6, 1980, submittal—§ 52.770(c)(53)) is disapproved for the Lake County sources specifically listed in Table 2 of 325 IAC 6–1–10.2 (§ 52.770(c)(57)); for pushing and quenching sources throughout the State (August 27, 1981, 325 IAC 11–3–2 (g) and (h)—§ 52.770(c)(42)); and for coke oven doors in Lake and Marion Counties (325 IAC 11–3–2(f)—§ 52.770(c)(42)). Applicability of this regulation to these sources is being disapproved because 325 IAC 5–1 does not meet the enforceability requirements of § 51.22 as it applies to these sources. Opacity limits in 325 IAC 6–1–10.2 and certain opacity limits in 325 IAC 11–3 supersede those

in 325 IAC 5–1, and USEPA has previously disapproved these superseding regulations (§ 52.776 (j), (g), and (f), respectively).

[40 FR 50033, Oct. 28, 1975; 41 FR 3475, Jan. 23, 1976, as amended at 48 FR 55860, Dec. 16, 1983; 51 FR 40676, 40677, Nov. 7, 1986; 52 FR 3644, Feb. 5, 1987; 52 FR 23038, June 17, 1987]

§ 52.795 Control strategy: Sulfur dioxide.

(a) Revised APC–13 (December 5, 1974 submission) of Indiana's Air Pollution Control regulations (sulfur dioxide emission limitation) is disapproved insofar as the provisions identified below will interfere with the attainment and maintenance of the suffix dioxide ambient air quality standards:

(1) The phrase ''equivalent full load'' in section 1(b)(2).

(2) The formula ''$E_p = 17.0\ Q_m^{0.67}$ where $E_p = E_m \times Q_m$'' in section 2(a).

(3) The phrase ''Direct fired process operations'' in sections 2(a), 3(c), 4(b), and 4(c).

(4) The modification of Q_m for non-Indiana coal as expressed in Section 2(a).

(b) The requirements of § 51.281 are not met by Warrick and Culley electrical generating stations enforcement orders which would revise the sulfur dioxide emission limitations for these two stations.

(c) The requirements of § 51.110(e) are not met by Wayne, Dearborn, Jefferson, Porter, and Warrick Counties.

(d)–(e) [Reserved]

(f) Approval—On March 14, 1996, the State of Indiana submitted a maintenance plan for Lawrence, Washington, and Warren Townships in Marion County and the remainder of the county, and requested that it be redesignated to attainment of the National Ambient Air Quality Standard for sulfur dioxide. The redesignation request and maintenance plan satisfy all applicable requirements of the Clean Air Act.

(g) Approval—On June 17, 1996, the State of Indiana submitted a maintenance plan for LaPorte, Vigo, and Wayne Counties and requested redesignation to attainment for the National Ambient Air Quality Standard for sulphur dioxide for each county in its entirety. The redesignation requests and maintenance plans satisfy all applicable requirements of the Clean Air Act.

(h) Approval—On June 21, 2005, and as supplemented on August 11, 2005, the State of Indiana submitted a request to redesignate the Lake County sulfur dioxide (SO_2) nonattainment area to attainment of the NAAQS. In its submittal, the State also requested that EPA approve the maintenance plan for the area into the Indiana SO_2 SIP. The redesignation request and maintenance plan satisfy all applicable requirements of the Clean Air Act.

(i) Approval—On March 28, 2013 the State of Indiana submitted a maintenance plan update for the Lake County, Indiana SO_2 maintenance area. This plan update demonstrates that Lake County will maintain attainment of the 1971 SO_2 NAAQS through 2025. This maintenance plan update satisfies section 175A of the Act.

[41 FR 35677, Aug. 24, 1976, as amended at 42 FR 34519, July 6, 1977; 47 FR 10825, Mar. 12, 1982; 47 FR 39168, Sept. 7, 1982; 49 FR 585, Jan. 5, 1984; 51 FR 40676, 40677, Nov. 7, 1986; 53 FR 1358, Jan. 19, 1988; 54 FR 2118, Jan. 19, 1989; 61 FR 58486, Nov. 15, 1996; 70 FR 56131, Sept. 26, 2005; 78 FR 54176, Sept. 3, 2013]

§ 52.796 Industrial continuous emission monitoring.

(a) APC–8, Appendix I 1.2.3, 3.3, and 6.0 are disapproved because they do not meet the requirements of 40 CFR 51.214.

(b)(1) The requirements of 40 CFR 51, Appendix P 3.3 are hereby incorporated and made a part of the applicable implementation plan for the State of Indiana.

(2) APC–8 does not apply to any source scheduled for retirement by October 6, 1980, or within five years after the promulgation of continuous emission monitoring requirements for that source category in 40 CFR part 51, Appendix P 1.1, provided that adequate evidence and guarantees are provided that clearly show that the source will cease operations on or before such date.

[43 FR 26722, June 22, 1978, as amended at 51 FR 40677, Nov. 7, 1986]

§ 52.797 Control strategy: Lead.

(a)–(b) [Reserved]

(c) On January 12, 1988, Indiana'a Office of Air Management (OAM), Indiana Department of Environmental Management, agreed to review all relevant

hood designs and performance guidance to determine which criteria to use in determining ongoing compliance with the capture efficiency provisions in 326 IAC 15–1 for Quemetco, Inc., and Refined Metals. Because these efficiencies are closely related to equipment design, OAM believes that a review of the process and control equipment designs and operating paramenters should provide the necessary determination of compliance. OAM will work with the Indianapolis local agency, the Indianapolis Air Pollution Control Division, on viable alternatives and will keep USEPA up to date on its progress. OAM anticipates that specific criteria for determining compliance will be incorporated into the sources' operation permits (and forwarded to USEPA for informational purposes), and, should the opportunity arise, 326 IAC 15–1 will be revised to similarly incorporate capture efficiency criteria.

(d) On March 2, 2000, Indiana submitted a maintenance plan for Marion County as part of its request to redesignate the County to attainment of the lead standard.

(e) On April 1, 2009, Indiana submitted an updated maintenance plan under section 175A of the CAA for Marion County for the continued attainment of the 1.5 $\mu g/m^3$ lead standard.

[53 FR 12905, Apr. 19, 1988, as amended at 53 FR 38722, Oct. 3, 1988; 54 FR 33896, Aug. 17, 1989; 65 FR 29963, May 10, 2000; 74 FR 48662, Sept. 24, 2009]

§ 52.798 Small business stationary source technical and environmental compliance assistance program.

The Indiana program submitted on January 14, 1993, as a requested revision to the Indiana State Implementation Plan satisfies the requirements of section 507 of the Clean Air Act Amendments of 1990.

[58 FR 46544, Sept. 2, 1993]

§ 52.799 Transportation conformity.

On June 4, 2010, Indiana submitted the Transportation Conformity Consultation SIP consisting of Metropolitan Planning Organization resolutions and Memorandums of Understanding to address interagency consultation and enforceability of certain transportation related control measures and mitigation measures. EPA is approving the Transportation Conformity SIP from Indiana.

[75 FR 50710, Aug. 17, 2010]

§ 52.800 Original identification of plan section.

(a) This section identifies the original ''Air Implementation Plan for the State of Indiana'' and all revisions submitted by Indiana that were Federally approved prior to December 31, 2009.

(b) The plan was officially submitted on January 31, 1972.

(c) The plan revisions listed below were submitted on the dates specified.

(1) The State Air Pollution Control Board submitted a SO_2 control strategy for the City of Indianapolis on March 16, 1972.

(2) The Governor submitted Pub. L. 100, Regulation APC 12–R and 13 through 17 on April 11, 1972.

(3) On May 1, 1972, the Governor's office submitted an errata sheet and revised pages for the State plan.

(4) A request for a nine month extension to achieve secondary SO_2 standards in the Indianapolis Region was made by the Governor on May 16, 1972.

(5) The State Air Pollution Control Board submitted additional information on surveillance methodology (nonregulatory) on May 17, 1972.

(6) Regulation APC 4–R was transmitted by the Governor on June 30, 1972.

(7) Assurance that emission data for sources was available for public inspection was given on July 24, 1972, by the Technical Secretary to the Indiana Board.

(8) Clarification of a policy on availability of emission data to the public sent August 17, 1972, by the Technical Secretary to the Indiana Board.

(9) On September 15, 1972, amendments to State control regulations 13, 15 and 16 were submitted to the Governor.

(10) On May 8, 1973, the Governor submitted a new regulation (APC–19) which replaced APC–1.

(11) The Governor submitted a transportation control plan for Marion County on October 19, 1973.

(12) On March 7, 1974, the Technical Secretary of the Air Pollution Control

Board, acting for the Governor of Indiana, submitted new regulation APC–20.

(13) On October 3, 1974, the Technical Secretary submitted revised regulations APC–16 covering CO, APC–17 covering NO_2 and a new regulation APC–22 covering classification of counties for SO_2, oxidants, particulates, NO_2 and CO.

(14) On November 8, 1974, the Technical Secretary submitted revised regulation APC–3 covering visible emissions and revised regulation APC–15 covering hydrocarbons.

(15) On December 5, 1974, the Technical Secretary submitted revised regulation APC–13 covering SO_2. On July 18, 1975, an updated Technical Support Document on APC–13 was submitted by the Technical Secretary.

(16) On June 14, 1976, the Technical Secretary submitted enforcement orders varying the final sulfur dioxide emission limitations for the Warrick and Culley electrical generating stations in Warrick County.

(17) On March 16, 1977, the Technical Secretary submitted new regulation APC–8, Continuous Emission Monitoring; and revised regulations APC–7, Incinerators; and APC–14, Indiana Ambient Air Quality Standards.

(18) On May 18, 1977, the Technical Secretary submitted revised regulation APC–2, Open Burning.

(19) On June 26, 1979, the Governor submitted a revised sulfur dioxide strategy, including regulation APC 13 with appendix, which was promulgated by the State on June 19, 1979 for all areas of the State. This included the Part D sulfur dioxide regulations for Lake, LaPorte, and Marion Counties. On August 27, 1980 and July 16, 1981 the State committed itself to correct conditionally approved items within their strategy. On October 6, 1980, the State submitted a recodified version of APC 13 which was promulgated by the State on August 27, 1980. This included 325 IAC 7, 325 IAC 1.1–6, 325 IAC 1.1–7–2 and 4, 325 IAC 12–5–1 and 2(a), 325 IAC 12–9–1 and 4, and 325 IAC 12–18–1 and 2. EPA is not taking action on: (i) 325 IAC 7 as it applies to Floyd and Vigo Counties, (ii) the 30-day averaging compliance method contained in 325 IAC 7–1–3, and (iii) the stack height provision for NIPSCO's Mitchell Station in the Lake County SO_2 strategy and (4) the stack height provisions for IPALCO's Stout Generating Chemicals Company, and Detroit Diesel Allison's Plant #8 in the Marion County SO_2 strategy.

(20) On June 26, 1979, the State of Indiana submitted to EPA revisions to the ozone and carbon monoxide portions (section 3.3.24) of its Marion County State Implementation Plan. On March 11, 1980, the state submitted revisions to the Marion County technical appendix to section 3.3.24. On May 19, 1980, the state submitted ozone and carbon monoxide attainment demonstrations for Marion County (section 1.5). On September 8, 1980 the state submitted its memoranda of understanding. On October 9 and October 15, 1980, the state submitted documentation concerning interagency coordination and the analysis of transportation control measures. On January 7, 1981, the state submitted corrections and clarifications in response to EPA's notice of proposed rulemaking (45 FR 81070).

(21) On June 26, 1979 Indiana submitted a motor vehicle inspection and maintenance program for Clark, Floyd, Lake, and Porter Counties. Additional commitments were submitted on April 7, 1980; June 12, 1980; August 27, 1980; November 13, 1980 and November 24, 1980.

(22) On June 26, 1979, Indiana made submittals pertaining to section 121 Consultation, section 110(a)(2)(K)—Permit Fees, section 126—Interstate Pollution, section 127—Public Notification, section 128—State Boards and section 110(a)(2)(F) (ii) and (iii)—Continuous Emission Monitoring Additional commitments were secured on April 17, 1980, June 25, 1980, August 1, 1980, November 10, 1980, December 9, 1980, and December 31, 1980. A revised version of Indiana's continuous emission monitoring regulation (325 IAC 3) was submitted on October 6, 1980.

(23) On June 26, 1979, the State of Indiana submitted a revision to provide for modification of the existing air quality surveillance network.

(24) On June 26, 1979, the Governor submitted a revised new source review regulation, APC–19. Additional information and commitments were submitted on June 25, 1980 and May 19,

1981. EPA is not taking action on section 7 of APC–19, Prevention of Significant deterioration.

(25) On June 26, 1979 the Governor submitted revised emission limits for Knauf Fiberglass, Shelby County. Additional information was submitted by November 21, 1979. The emission limitations were recodified as 325 IAC 11–4 and 11–4 Appendix A and were resubmitted on October 6, 1980.

(26) On June 26, 1979 the Governor submitted Indiana's definition regulation, APC–1. The definitions were recodified as 325 IAC 1.1–1 and resubmitted on October 6, 1980. On January 21, 1981 Indiana submitted a revised definition for ''positive net air quality benefit.'' EPA is taking no action on 325 IAC 1.1–1–82, definition of ''State Implementation Plan (SIP).''

(27) On October 6, 1980, Indiana submitted Regulation 325 IAC 1.1–2 (formerly APC 14) which includes the primary and secondary ambient air quality standards for ozone and lead.

(28) On February 26, 1981, Indiana submitted a revision to its plan waiving the State's sulfur dioxide air monitoring requirement of section 4(a) of Regulation 325 IAC 7–1 for the area around Public Service of Indiana's Noblesville Generating Station.

(29) On June 26, 1979, May 19, 1980, September 24, 1980, October 9, 1980 and October 15, 1980, Indiana submitted transportation control plans and ozone demonstrations of attainment for Lake, Porter, Clark, Floyd, St. Joseph, Elkhart and Allen Counties. It also submitted a carbon monoxide demonstration of attainment for Lake County. EPA is taking no action on the ozone demonstration of attainment for St. Joseph, Elkhart and Allen Counties.

(30) On April 10, 1981, Indiana submitted revised emission limits for Indiana Farm Bureau Cooperative Association's Beech Grove plant.

(31) On February 11, 1980, Indiana submitted a revised sulfur dioxide strategy for Vigo County. Technical information was submitted on December 10, 1979 and on May 30, 1980. On October 6, 1980, the State submitted a recodified version of the Vigo County Regulations, 325 IAC Article 7, which was promulgated by the State on August 27, 1980. EPA is not taking action on the 30-day averaging compliance method contained in 325 IAC 7–1–3 as it applies to Vigo County.

(32) On November 24, 1981, Indiana submitted site specific emission limitations for Tecumseh Pipe Line Company, Schererville; and Wayne Transportation Division, Richmond.

(33) On February 11, 1980, Indiana submitted APC 15. EPA is taking no action the ''bubble'' provisions contained in Section 8(a)(2) of revised APC 15.

(34) On June 26, 1979, the Governor of Indiana submitted general TSP RACT emisson limits for nonattainment areas. These regulations were amended and recodified as 325 IAC 6–1 and resubmitted on October 6, 1980. On October 6, 1980, the State submitted a revised TSP regulation for process sources, 325 IAC 6–3; a source specific Dearborn County strategy (amendments were submitted on August 10, 1981), 325 IAC 6–1–8; a source specific Dubois County strategy, 325 IAC 6–1–9; and a source specific Wayne County strategy (amendments were submitted on January 29, 1981), 325 IAC 6–1–14. On February 11, 1980, Indiana submitted a source specific Marion County strategy (amendments were submitted on October 28, 1981), 325 IAC 6–1–12. EPA is deferring rulemaking at this time on the coke battery emission limitations in the Marion County strategy. On January 29, 1981, the State submitted a source specific Vigo County strategy (amendments were submitted on October 28, 1981 and May 7, 1982), 325 IAC 6–1–13; a source specific Howard County strategy, 325 IAC 6–1–15; and a source specific Vanderburgh County strategy (amendments were submitted on October 28, 1981), 325 IAC 6–1–16. EPA is deferring rulemaking at this time on the coke battery emission limitations in the Vigo County strategy and on whether the Howard County strategy currently contains all the elements required by the Clean Air Act. On July 8, 1981, the State submitted a source specific Clark County strategy, 325 IAC 6–1–17, and a source specific St. Joseph County strategy, 325 IAC 6–1–18. On January 29, 1981 and May 7, 1982, the State submitted additional information and commitments.

(35) On October 6, 1980, Indiana submitted its regulations as recodified.

Amendments were submitted on January 29, 1981 and March 18, 1981. EPA's approval is directed specifically to the codification numbering system change, not to the substance within each of the codified rules.

(36) [Reserved]

(37) On May 10, 1982, Indiana submitted source specific emission limits contained in operating permits for the Bunge Corporation, Globe Industries, Skyline Corporation, and Dubois County Farm Bureau Co-op Assn., Inc. as revisions to the Indiana SIP.

(38) On April 27, 1982, Indiana submitted source specific TSP emission limits for Huntingburg Wood Products, Jasper Desk Company, Jasper Office Furniture Company, Arist-O-Kraft Company, Mohr Construction Company, Dana Corporation, and Allis Chalmers Corporation. On April 29, 1982, Indiana submitted source specific VOC emission limits for McGee Refining Corporation, Hesco Industries, and Clark Oil and Refining Corporation.

(39) On November 25, 1980, Indiana submitted 325 IAC Article 8, Volatile Organic Compound Regulations. This regulation adds Group II CTG requirements to Indiana's VOC plan and was State promulgated on October 15, 1980. EPA is not taking action on 325 IAC 8–1.1 Section 2(b), Bubble Approach.

(40) On November 24, 1981, Indiana submitted site specific emission limitations for Jeffboat, Inc., Jeffersonville.

(41) On November 23, 1982, Indiana submitted source-specific emission limits for Paul H. Rohe Company, Inc.

(42) On June 26, 1979, Indiana submitted its coke oven battery regulation, APC 9. On October 6, 1980 Indiana resubmitted this regulation recodified as 325 IAC 11–3. On August 27, 1981, Indiana submitted amendments to 325 IAC 11–3. EPA is taking no action on 325 IAC 11–3–2(a), Pre-Carbonization Emissions. It is taking no action on 325 IAC 11–3–2(i), Underfire Particulate and Sulfur Dioxide Emissions, as it applies to Lake County.

(43) On February 26, 1981 and June 22, 1982, Indiana submitted a 9.57 lbs/MMBTU sulfur dioxide emission limit for IMEC's Breed Generating Station in Sullivan County. This limit supersedes that approved at paragraph (c)(19).

(44) On June 28, 1982, Indiana submitted new open burning regulations for Marion County. An amendment was submitted on August 25, 1982.

(45) On March 15, 1983, Indiana submitted a revision to the TSP and SO_2 portions of its SIP in the form of operating permits for the Sisters of Providence Convent in St. Mary-of-the-Woods, Indiana.

(46) On November 29, 1982, and December 9, 1982, Indiana submitted amendments to 325 IAC 11–4, Fiber Glass Insulation Manufacturing (Superfine Process) Limitations.

(47) On August 17, 1983, Indiana submitted emission limits of 1.8 lbs/hr and 2.4 tons/yr for the boilers at Jasper Cabinet Co., Dubois County. The 1.8 lbs/hr limit replaces the 7.6 lbs/hr limit approved for this source in subparagraph 34.

(48) [Reserved]

(49) On March 28, 1983, Indiana submitted a 20% 2-hour opacity limit as an ''equivalent visible emission limit'' (EVEL) for the underfire stack at Bethlehem Steel Corporation's Coke Battery No. 2 in Porter County. This EVEL is approved for as long as the SIP mass emission limit determined from 325 IAC 6–2 (October 6, 1980, submittal) for this source remains in the SIP See (c)(6), (35), and (42).

(50) On December 21, 1983, the Indiana Air Pollution Control Board submitted Indiana Rule 325 IAC 6–2.1, Particulate Emission Limitations for Sources of Indirect Heating. This rule repeals and replaces Indiana Rule 325 IAC 6–2. See §§ 52.770(c)(4) and (c)(35) and § 52.776(i).

(i) *Incorporation by reference.* (A) 325 IAC 6–2.1, revised regulation establishing Particulate Emission Limitations for Sources of Indirect Heating.

(ii) *Additional material.* (A) December 21, 1983, submittal of Finding of Facts and Recommendations of Hearing Officer R. W. James on 325 IAC 6–2.1.

(B) March 27, 1985, commitment letter from the State concerning the procedures the State will use in processing ''bubbles'' under 325 IAC 6–2.1–2(B) and 3(b). See § 52.776(i).

(51) On February 7, 1983, Indiana submitted revised opacity limits for existing boilers at Olin Corporation, located in Covington, Indiana. These ''equivalent visible emission limits'' (EVEL)

are approved for as long as the SIP mass emission limit determined from 325 IAC 6–2 (October 6, 1980 submittal) for this source remains in the SIP. See § 52.770(c) (6) and (35) and § 52.776(h)(2).

(i) *Incorporation by reference.* (A) EVELs for Olin Corporation contained in Operating Permits issued by IAPCB, dated October 6, 1981.

(ii) *Additional material.* (A) September 1, 1983, transmittal by IAPCD's A. Sunderland of Olin's Mass Emission Tests, dated August 26, 1983.

(B) April 5, 1984, letter from IAPCD's E. Stresino transmitting original petition, including Method 9 opacity data.

(52) On February 23, 1984, the Indiana Air Pollution Control Board submitted a revision to Indiana's SO_2 SIP waiving the self-monitoring requirement for Public Service Indiana's Edwardsport Generating Station, as set forth in section 4(a) of Rule 325 IAC 7–1. See (c)(19). This revision becomes effective once the Edwardsport Station achieves an annual operating capacity of no greater than 10%.

(53) On October 6, 1980, Indiana submitted revised opacity regulation 325 IAC 5–1. It replaces 1972 APC 3 for process sources, approved at paragraph (b), and SIP 1974 APC 3 for combustion sources, approved in part at subparagraph (c)(14). Indiana does not intend 325 IAC 5–1 to regulate the emission points in Lake County listed in Table 2 of 325 IAC 6–1–110.2 (subparagraph (c)(57)). USEPA is disapproving 325 IAC 5–1 for these sources. Indiana does not intend 325 IAC 5–1 to regulate certain coke battery emission sources listed in 325 IAC 11–3 (subparagraph (c)(42)). USEPA is disapproving 325 IAC 5–1 as it applies to the provisions of 325 IAC 11–3 which USEPA disapproved at (c)(42), i.e., pushing and quenching sources throughout the State and coke oven doors in Lake and Marion Counties. Additionally, Indiana has modified 325 IAC 5–1 as it applies to the stack emission points in Porter County listed at 325 IAC 6–6–4. USEPA disapproved 325 IAC 5–1 as it applies to these Porter County sources on February 5, 1987 (52 FR 3640). For those source categories where USEPA is disapproving 325 IAC 5–1, they remain regulated by the previously approved opacity SIP which consists of SIP 1974 APC 3 for combustion sources and 1972 APC 3 for process sources. Additionally, as long as the Bethlehem Steel Corporation No. 2 Coke Oven Battery Underfire Stack EVEL (subparagraph (c)(49)) remains approved, it replaces 325 IAC 5–1.

(i) *Incorporation by reference.* (A) A letter dated October 6, 1980 from the State of Indiana Air Pollution Control Board and 325 IAC 5–1, Visible Emission Limitations, State promulgated on August 26, 1980.

(ii) *Additional material.* (A) February 12, 1985, letter from the Technical Secretary of the Air Pollution Control Board committing the State to make certain technical changes to 325 IAC 5–1.

(54) On March 28, 1984, Indiana submitted a revised TSP emission limitation for Richmond State Hospital, Wayne County, Indiana. This limitation replaces the one in 325 IAC 6–1–14 which was previously approved at (c)(34).

(i) *Incorporation by reference.* (A) On January 13, 1984, Indiana issued to Richmond State Hospital an amendment to operating permit, 89–04–85–0153, which revised its TSP emission limitations for the four boilers to 0.60 lbs/MMBTU with an annual total limit of 452 tons/yr.

(55) On January 30, 1985, Indiana submitted revised VOC regulations 325 IAC 8–1.1, 8–2, 8–3, 8–4 and 8–5 to satisfy certain conditions of USEPA's approval. Those regulations amended those approved at (c)(33) and (c)(34). In addition, the applicability of the regulations was extended to cover St. Joseph and Elkhart Counties. USEPA is taking no action on changes to 325 IAC 8–1.1–2(f), Methods of Compliance, and the repeal of 325 IAC 8–5–6, Perchloroethylene Dry Cleaning, because these exempt the compound perchloroethylene from control without the State justifying that such exemption is consistent with the Part D reasonably available control technology (RACT) requirements.

NOTE: If Indiana allows use of a non-USEPA test method in the future, its use must be submitted to USEPA as a SIP revision.

(i) *Incorporation by reference.* (A) Indiana's Volatile Organic Compounds

(VOC) RACT I and II regulations, Title 325 Air Pollution Control Board:

(*1*) 325 IAC 8–1.1, Establishes Volatile Organic Compound Emission Limitations. State promulgated on June 21, 1984, and amended November 7, 1984.

NOTE: 325 IAC 8–1.1–4 Test methods andprocedures. If Indiana allows use of a non-USEPA test method in the future, its use must be submitted to USEPA as a SIP revision.

(*2*) 325 IAC 8–2 Surface Coating Emission Limitations. State promulgated on June 21, 1984, and amended November 7, 1984.

(*3*) 325 IAC 8–3 Solvent Metal Cleaning Operating Requirements. State promulgated on October 15, 1984, and amended November 7, 1984.

(*4*) 325 IAC 8–4 Petroleum Sources. State promulgated on June 21, 1984, and amended November 7, 1984.

(*5*) 325 IAC 8–5 Miscellaneous Operations. State promulgated on June 21, 1984, and amended November 7, 1984.

(56) On September 2, 1983, the Indiana Air Pollution Control Board (Board) submitted revised emission limitations for Occidental Chemical Corporation (OCC), located in Clark County, Indiana. Amendments to these operating permits were submitted by the State on December 21, 1983. These emission limits replace those approved for OCC (under its former name, Hooker Chemical) at (c)(34).

(i) *Incorporation by reference.* (A) Indiana Air Pollution Control Board Operation Permits:

(*1*) Control Number 16113, date issued December 27, 1982.

(*2*) Control Number 16114, date issued December 27, 1982.

(*3*) Control Number 16115, date issued December 27, 1982.

(ii) *Additional material.* (A) OCC corrected emissions dated September 13, 1984.

(B) OCC's new modeled data, dated November 6, 1984.

(C) State's modeling for OCC and surrounding area, dated July 2, 1984 and August 7, 1984.

(57) On October 11, 1983, October 24, 1983, and April 16, 1984, Indiana submitted a revised Lake County Total Suspended Particulates (TSP) Plan, including regulations 325 IAC 6–1–10.2 and 6–1–11.1. This plan is disapproved. See § 52.776(j).

(58) On November 13, 1984, Indiana submitted 325 IAC 13–2, Motor Vehicle Tampering and Fuel Switching.

(i) *Incorporation by reference.* (A) Indiana Rule 325 IAC 13–2, promulgated by the State on September 24, 1984.

(59) On March 24, 1986, the State of Indiana submitted a negative declaration for synthetic organic chemical manufacturing industry (SOCMI) source leaks and oxidation, and for natural gas/gasoline processing plants. On April 14, 1986, the State of Indiana submitted a negative declaration for manufacturers of high-density polyethylene, polypropylene, and polystyrene resins, and for large petroleum dry cleaners.

(i) *Incorporation by reference.* (A) Letter dated March 24, 1986, from Harry D. Williams, Director, Air Pollution Control Division, Indiana State Board of Health. Letter dated April 14, 1986, from Walter J. Kulakowski, Assistant Commissioner for Air Management, Department of Environmental Management.

(60) On January 18, 1984, Indiana submitted as a revision to the TSP SIP certain operating conditions and limits for three coke oven batteries at Citizens Gas and Coke Utility in Marion County. The operating permits included conditions and limits for Batteries E, H and Number One with respect to visible emissions from coke oven doors and pushing operations and allowable content of total dissolved solids in quench makeup water. EPA disapproves the limit on coke oven door visible emissions and total dissolved solids content for quench makeup water on Battery Number One, because the limits are inconsistent with that battery's Part C Prevention of Significant Deterioration requirements and Part D Lowest Achievable Emission Rate requirements. See subparagraphs (c)(34) and (c)(42) for further background on actions concerning coke oven batteries.

(i) *Incorporation by reference.* (A) Certificates of Operation Numbers 06895, 06896, and 06897 for Citizens Gas and

Coke Utility issued by the City of Indianapolis, dated June 30, 1980, with addition of operating conditions and emission limits, dated September 12, 1983, as adopted by the State on January 4, 1984, and transmitted on January 18, 1984.

(ii) *Additional information.* (A) September 7, 1983, letter from the City of Indianapolis to the State concerning quarterly analysis of coke quenching makeup water.

(61) On October 15, 1984, Indiana submitted a revision to the Porter County total suspended particulate (TSP) plan, including regulation 325 IAC 6–6, which was promulgated by Indiana on November 7, 1984. This plan is disapproved. See § 52.776(l).

(62) On March 4, 1985, Indiana submitted a revision to the Marion County carbon monoxide (CO) plan. USEPA approved this plan based on monitoring and modeling data and a commitment to implement a one-way street pair in the Indianapolis central business district. These elements demonstrate attainment of the CO National Ambient Air Quality Standards by December 31, 1987.

(i) *Incorporation by reference.* (A) Marion County CO plan for attainment and maintenance of the CO NAAQS from Indianapolis Air Pollution Control Division, Sections 1.0, 3.4, 4.1, 4.2, 4.3.1, 4.3.2, 4.4, 5.1, 5.5.4, 6.1, 6.2.1, 6.2.2, 6.3, and 6.4, dated November 12, 1984.

(B) Letter from Indiana forwarding Marion County CO plan to USEPA, dated March 4, 1985.

(ii) *Additional material.* (A) Portion of additional technical information from Indianapolis Air Pollution Control Division, including Section 1.0, dated August 28, 1985.

(B) Letter from Indiana forwarding additional technical information, dated October 7, 1985.

(63) On January 23, 1986, the State submitted revisions to its Stage I Gasoline Dispensing regulations, which replace those conditionally approved at (c)(33), (c)(35)—Codification only, and (c)(55).

(i) *Incorporation by reference.* (A) Letter of January 23, 1986 to EPA from the State of Indiana, and Title 325 Air Pollution Control Board Rule 325 IAC 8–4–6, Gasoline Dispensing Facilities, which was promulgated on January 14, 1986.

(B) Title 325 Air Pollution Control Board Rule 8–1.1–3, Compliance Schedules, subsections (f), (g), and (h), which was promulgated on January 14, 1986.

(64) On January 23, 1986, the State of Indiana submitted to USEPA a revision to the Indiana Lead State Implementation Plan in order to satisfy the requirements of 40 CFR 51.160 through 51.163 and 51.165(b) (formerly 40 CFR 51.18 (a) through (i) and 51.18(k)) for a new source review program, USEPA approved this revision for lead new source review only.

(i) *Incorporation by reference.* (A) Construction and Operating Permit Requirements, 325 IAC 2–1.1 promulgated on January 8, 1986.

(B) Letter of November 17, 1987, to EPA from the Indiana Department of Environmental Management.

(65) On November 30, 1981, Indiana established its air quality surveillance network for lead. On November 21, 1983, Indiana notified USEPA that Corning Glass was shut down. On February 18, 1987, Indiana submitted its regulation to control lead emissions, 325 IAC 15–1.

(i) *Incorporation by reference.* (A) 325 IAC 15–1, Lead Emission Limitations, effective February 27, 1987.

(B) Letter of February 18, from the State of Indiana to EPA.

(ii) *Additional material.* (A) A November 30, 1981, letter from Harry Williams, Technical Secretary, Indiana Air Pollution Control Board establishing Indiana's air quality surveillance network for lead.

(B) A November 21, 1983, letter from Harry Williams, Technical Secretary, confirming that the Corning Glass facility in Wells County was permanently shut down and had been taken out of the State's emission inventory.

(C) A June 9, 1987, letter from Timothy Method, Acting Assistant Commissioner, submitting a general strategy and additional increments of progress required of Hammond Lead.

(66) On October 21, 1987, the State of Indiana submitted 325 IAC 7–1–3.1, Reporting Requirements and Methods to Determine Compliance, as a revision to its SO_2 plan. At paragraph (c)(19) of this section, USEPA approved/conditionally approved Indiana's SO_2 plan,

325 IAC 7-1, for most areas of the State. However, the emission limits in this plan were set aside by the Court of Appeals for the Seventh Circuit because USEPA took no action on the State's 30-day averaging compliance method in 325 IAC 7-1-3. New compliance method 325 IAC 7-1-3.1 replaces former 325 IAC 7-1-3. Therefore, with EPA's approval of 325 IAC 7-1-3.1, USEPA is reinstating its March 12, 1982, approval of Indiana's October 6, 1980, SO_2 rule, 325 IAC 7-1-1,7-1-2 (except for any emission limits in the below named counties), 7-1-4, 7-1-5, 7-1-6, and 7-1-7. Other than these general provisions and 325 IAC 7-1-3.1, USEPA is not acting on or approving today Indiana's SO_2 plan for Dearborn, Floyd, Gibson, Jefferson, Lake, LaPorte, Marion, Morgan, Porter, Sullivan, Vermillion, Vigo, Warrick, and Wayne Counties. Indiana recodified 325 IAC 7-1-1 through 7-1-7 to 326 IAC 7-1-1 through 7-1-7 and submitted the recodified rules on November 16, 1988.

(i) *Incorporation by reference.* (A) 326 IAC 7-1-1 through 326 7-1-7, Sulfur Dioxide Emission Limitations, as published in the April 1, 1988, *Indiana Register* (IR) at 11 IR 2511.

(67) On February 3, 1988, Indiana submitted its SO_2 plan for Jefferson, LaPorte, Marion, Sullivan, and Wayne Counties; on March 23, 1988, it submitted its SO_2 plan for Vermillion County; and on August 1, 1988, it submitted its SO submitted the same rules in its plans for Jefferson, LaPorte, Marion, Sullivan, and Wayne Counties, as recodified into Title 326 of the Indiana Administrative Code. These plans consist of the provisions and requirements in 326nIAC 7-1 approved or reinstated for these counties at paragraph (c)(66), any SO_2 emission limits in 326 IAC 7-1-2 applicable in these counties (as incorporated by reference at (c)(66)(i)(C)), and the site-specific SO_2 emission limits and other requirements in 326 IAC 7-1-13 (Jefferson County), 326 IAC 7-1-12 (LaPorte County), 326 IAC 7-1-9 (Marion County), 326 IAC 7-1-14 (Sullivan County), 326 IAC 7-1-15 (Vermillion County), 326 IAC 7-1-10.1 (Vigo County), and 326 IAC 7-1-11 (Wayne County).

(i) *Incorporation by reference.* (A) 326 IAC 7-1-13, Jefferson County Sulfur Dioxide Emission Limitations, as published in the April 1, 1988, *Indiana Register* (IR) at 11 IR 2526.

(B) 326 IAC 7-1-12, LaPorte County Sulfur Dioxide Emission Limitations, as published on April 1, 1988, at 11 IR 2526.

(C) 326 IAC 7-1-9, Marion County Sulfur Dioxide Emission Limitations, as published on April 1, 1988, at 11 IR 2518.

(D) 326 IAC 7-1-14, Sullivan County Sulfur Dioxide Emission Limitations, as published on April 1, 1988, at 11 IR 2526.

(E) 326 IAC 7-1-15, Vermillion County Sulfur Dioxide Emission Limitations, as published on March 1, 1988, at 11 IR 1735.

(F) 326 IAC 7-1-10.1, Vigo County Sulfur Dioxide Emission Limitations, as published on August 1, 1988, at 11 IR 3785.

(G) 325 IAC 7-1-11, Wayne County Sulfur Dioxide Emission Limitations, as published on April 1, 1988, at 11 IR 2525.

(68) On December 2, 1983, Indiana submitted its transportation control plans as an element in its ozone strategy for Lake and Porter Counties. Further information was submitted on June 10, 1986.

(i) *Incorporation by reference.* (A) Chapter 7, Mobile Source Strategies and Reductions, Sections A.1.a, 2, and 3 and Exhibits 7-1 and 7-3 of Indiana's 1982 ozone and carbon monoxide plan, as adopted by the Indiana Air Pollution Control Board at its November 2, 1983, metting.

(B) [Reserved]

(ii) *Additional material.* (A) On June 10, 1986, Indiana submitted a May 23, 1986, letter from the Northwestern Indiana Regional Planning Commission discussing the Lake and Porter Counties' transportation control plans and their implementation.

(B) [Reserved]

(69) On December 2, 1983, Indiana submitted its ozone plan for Lake and Porter Counties, as adopted by the Indiana Air Pollution Control Board on November 2, 1983. On March 2, 1984, Indiana submitted as its attainment demonstration for Lake and Porter Counties, Illinois' attainment demonstration for the greater Chicago area. The greater Chicago attainment demonstration, as submitted by Indiana, and Indiana's overall ozone plan for

Lake and Porter Counties is disapproved. See §§ 52.773(i) and 52.777(d). The disapproval does not affect USEPA's approval (or conditional approval) of individual parts of Indiana'a ozone plan, and they remain approved. See § 52.770(c) (20), (21), (29), (33), (38), (39), (55), (58), and (59).

(70) On February 3, 1988, and August 23, 1988, Indiana submitted its lead plans for Quemetco, Inc., in Indianapolis; Exide Corporation in Logansport; C and D Power System in Attica; and General Battery Corporation in Frankfort. This included a recodification of its former lead rule, 325 IAC 15-1 (40 CFR 52.770(c)(65)), to 326 IAC 15-1 and revisions to this rule.

(i) *Incorporation by reference.* (A) Title 326—Air Pollution Control Board—Indiana Administrative Code (326 IAC) 15-1, Lead Emission Limitations, as published in the *Indiana Register* (IR) on April 1, 1988, at 11 IR 2564.

(B) Corrections of typographical, clerical, or spelling errors to the document printed at 11 IR 2368 (Indiana's recodified air rules, including 326 IAC 15-1), as published on August 1, 1988, at 11 IR 3921.

(71) On March 23, 1988, Indiana submitted its SO_2 plan for Morgan County; on July 12, 1988, it submitted its SO_2 plan for Floyd County, and on November 16, 1988, it submitted its SO_2 plan for Warrick County. On December 6, 1988, it submitted its Warrick County rule as published in the *Indiana Register*. These plans consist of the provisions and requirements in 326 IAC 7-1 approved or reinstated for these counties at paragraph (c)(66), and SO_2 emission limits in 326 IAC 7-1-2 applicable in these counties (as incorporated by reference at paragraph (c)(66)(i)(C) of this section), and the site-specific SO_2 emission limits and other requirements in 326 IAC 7-1-16 (Floyd County), 326 IAC 7-1-18 (Morgan County), and 326 IAC 7-1-17 (Warrick County).

(i) *Incorporation by reference.* (A) 326 IAC 7-1-16, Floyd County Sulfur Dioxide Emission Limitations, as published in the March 1, 1988, *Indiana Register* (IR) at 11 IR 1737.

(B) 326 IAC 7-1-18, Morgan County Sulfur Dioxide Emission Limitations, as published on June 1, 1988, at 11 IR 3018.

(C) 326 IAC 7-1-17, Warrick County Sulfur Dioxide Emission Limitations, as published on December 1, 1988, at 12 IR 553.

(72) On November 16, 1988, Indiana submitted its SO_2 plan for Dearborn County; on July 12, 1988, it submitted its SO_2 plan for Gibson County; on November 16, 1988, and December 6, 1988, it submitted its SO_2 plan for Lake County, and on November 16, 1988, and December 6, 1988, it submitted its SO_2 plan for Porter County. These plans consist of the provisions and requirements in 326 IAC 7-1 approved or reinstated for these counties at paragraph (c)(66), any SO_2 emission limits in 326 IAC 7-1-2 applicable in these counties (as incorporated by reference at paragraph (c)(66)(i)(C) of this section, and the site-specific SO_2 emission limits and other requirements in 326 IAC 7-1-20 (Dearborn County), 326 IAC 7-1-8.1 (Lake County), 326 IAC 7-1-19 (Gibson County), and 326 IAC 7-1-21 (Porter County).

(i) *Incorporation by reference.* (A) 326 IAC 7-1-20, Dearborn County Sulfur Dioxide Emission Limitations, as published in the August 1, 1988, *Indiana Register* (IR) at 11 IR 3784.

(B) 326 IAC 7-1-19, Gibson County Sulfur Dioxide Emission Limitations, as published on June 1, 1988, at 11 IR 3019.

(C) 326 IAC 7-1-8.1, Lake County Sulfur Dioxide Emission Limitations, as published on November 1, 1988, at 12 IR 262, and corrected on December 1, 1988, at 12 IR 597.

(D) 326 IAC 7-1-21, Porter County Sulfur Dioxide Emission Limitations, as published on November 1, 1988, at 12 IR 259, and corrected on December 1, 1988, at 12 IR 597.

(E) 326 IAC 7-1-1, Applicability, as published on December 1, 1988, at 12 IR 552.

(73) [Reserved]

(74) On July 23, 1987, the Indiana Department of Environmental Management submitted to USEPA a request for a site-specific revision to Indiana's ozone SIP. This revision consists of compliance date extensions until November 7, 1987, for Uniroyal's two fabric coaters and four vinyl printers at its Mishawaka plant, located in St. Joseph County, Indiana.

(i) *Incorporation by reference.* (A) Air pollution Operation Permits Numbers: U 2 33–15A, U 2 34–23, U 2 33–14C, U 2 34–3C, U 2 33–16, U 2 33–18, Date issued December 1, 1988, and Date Expires December 1, 1990.

(75) [Reserved]

(76) On October 21, 1987, the State submitted 325 IAC 8–1.1–5, Petition for alternative controls, which gives the provisions and requirements for petitioning for reasonably available control technology volatile organic compound plans. On November 16, 1988, the State submitted this rule recodified as 326 IAC 8–1–5, Petition for site-specific reasonably available control technology (RACT) plan.

(i) *Incorporation by reference.* (A) Title 326 Air Pollution Control Board, Indiana Administration Code (IAC) 8–1–5, Petition for site-specific reasonably available control technology (RACT) plan, as published in the April 1, 1988, *Indiana Register*, at Volume 11 IR 2530. Filed with the Secretary of State on March 10, 1988.

(77) [Reserved]

(78) On January 18, 1989, and June 23, 1989, Indiana submitted its revised lead plan for the HLP-Lead Plant of Hammond Lead Products, Inc. in Hammond Indiana. Additionally, minor changes were made to Indiana's overall lead rule, 326 IAC 15–1, Lead Emission Limitations.

(i) *Incorporation by reference.* (A) Title 326—Air Pollution Control Board—Indiana Administrative Code (326 IAC) 15–1, as published in the Indiana Register (IR) on July 1, 1989, at 1850. This rule was effective for State purposes on July 14, 1989.

(79) [Reserved]

(80) On October 15, 1987, the State submitted 325 IAC 8–2–13, Wood Furniture and Cabinet Coating, as a portion of its 1982 ozone plan, which gives provisions and requirements for controlling volatile organic compound (VOC) emissions from sources located in Clark, Floyd, Lake and Porter Counties. On November 16, 1988, the State submitted this rule recodified as 326 IAC 8–2–12, Wood Furniture and Cabinet Coating.

(i) *Incorporation by reference.* (A) Title 326 Air Pollution Control Board, Indiana Administrative Code (IAC) 8–2–1, Applicability of rule; and 326 IAC 8–2–12, Wood furniture and cabinet coating, as published in the April 1, 1988, ''Indiana Register'' (IR), at 11 IR 2536 and corrected on March 1, 1989, at 12 IR 1394. Filed with the Secretary of State on March 10, 1988.

(81) On April 11, 1988, the State submitted, as a portion of its 1982 ozone plan, rules to control volatile organic compound (VOC) emissions in Lake and Porter Counties. These rules consist of the provisions and requirements in 326 IAC 14–1, General Provisions; 326 IAC 14–8, Emission Standards for Equipment Leaks; and 326 IAC 14–9, Emission Limitations for Benzene from Furnace Coke Oven By-product Recovery Plants.

(i) *Incorporation by reference.* (A) Amendments to title 326, Air Pollution Control Board, Indiana Administrative Code (IAC) 14–1 General Provisions; 326 IAC 14–8 Emission Standards for Equipment Leaks; (Fugitive Emission Sources); and 326 IAC 14–9 Emission Limitations for Benzene from Furnace Coke Oven By-Product Recovery Plants, as published in the June 1, 1988, Indiana Register (IR) at 11 IR 3011. Filed with the Secretary of State on April 13, 1988.

(82) [Reserved]

(83) On January 21, 1981, the State submitted its revised Malfunctions Rule 325 IAC 1.1–5. On November 16, 1988, Indiana submitted its recodified regulations. This rule was renumbered 326 IAC 1–6, Malfunctions.

(i) *Incorporation by reference.* (A) Title 326 of the Indiana Administrative Code (IAC), Rule 326 IAC 1–6: Malfunctions as published in the April 1, 1988, Indiana Register (IR) at 11 IR 2380. Filed with the Secretary of State on March 10, 1988.

(ii) *Additional materials.* (A) On July 2, 1982, the State submitted clarifications of its intent for 325 IAC 1.1–5.

(84) On October 27, 1989, and January 19, 1990, Indiana submitted its vehicle inspection and maintenance plan for Clark, Floyd, Lake, and Porter Counties.

(i) *Incorporation by reference.* (A) Title 326, Air Pollution Control Board, of the Indiana Administrative Code (IAC), Rule 13–1, Motor Vehicle Inspection

and Maintenance Requirements, Adopted at 13 Indiana Register 500, effective January l, 1990.

(85) On December 2, 1983, Indiana submitted its transportation control plan for Clark and Floyd Counties as one element in its ozone plan for the area. Additional material was submitted on May 14, 1986.

(i) *Incorporation by reference.* (A) Chapter 7, Mobile Source Strategies and Reductions, sections A.1.b and exhibits 7–2 and 7–4, as adopted by the Indiana Air Pollution Control Board at its November 2, 1983, meeting.

(ii) *Additional material.* (A) On May 14, 1986, Indiana submitted an April 23, 1986, Letter from Jim Thorne, Transportation Director, Kentuckiana Regional Planning and Development Agency, discussing the Clark and Floyd Counties portion of the Louisville, Kentucky transportation control plan.

(86) On February 15, 1990, Indiana submitted an amended rule which updates the applicable edition of the Code of Federal Regulations from the 1987 edition to the 1988 edition.

(i) *Incorporation by reference.* (A) Title 326, Air Pollution Control Board, Indiana Administrative Code (IAC) 1–1–3, References to the Code of Federal Regulations, as published in the February 1, 1990, Indiana Register (IR), Volume 13 at IR 867. Filed with the Secretary of State on December 14, 1989.

(87) On October 23, 1990, and August 19, 1991, the Indiana Department of Environmental Management submitted regulations adopted by the Indiana Air Pollution Control Board as part of title 326 of the Indiana Administrative Code and intended incorporation to the Indiana ozone plan as part of the stationary source control strategy.

(i) *Incorporation by reference.* (A) The following volatile organic compound rules adopted by the Indiana Air Pollution Control Board as part of title 326 of the Indiana Administrative Code (326 IAC) and intended to partially satisfy the requirements of the Clean Air Act.

(*1*) Effective October 23, 1988: 326 IAC 8–1–.05 Coating Definition, 326 IAC 8–2–11 Fabric and Vinyl Coating.

(*2*) Effective February 15, 1990: 326 IAC 1–2–48 Non-Photochemically Reactive Hydrocarbon Defined; 326 IAC 8–2–5 Paper Coating Operations.

(*3*) Effective May 18, 1990: 326 IAC 1–2–18.5 Cold Cleaner Degreaser Defined; 326 IAC 1–2–21.5 Conveyorized Degreaser Defined; 326 IAC 1–2–29.5 Freeboard Height Defined; 326 IAC 1–2–29.6 Freeboard Ratio Defined; 326 IAC 1–2–49.5 Open Top Vapor Degreaser Defined; 326 IAC 8–2–9 Miscellaneous Metal Coating Operations; 326 IAC 8–3–1 Organic Solvent Degreasing Operations; 326 IAC 8–5–3 Synthesized Pharmaceutical Manufacturing Operations; 326 IAC 8–5–5 Graphic Arts Operations.

(*4*) Effective June 8, 1990: 326 IAC 8–1–2 Compliance Methods; 326 IAC 1–2–90 Volatile Organic Compound (VOC) Definition; 326 IAC 8–1–4 Testing Procedures.

(*5*) Effective June 5, 1991: 326 IAC 1–2–14 Coating Line Definition; 326 IAC 8–1–1 Applicability of Rule; 326 IAC 8–1–2 Compliance Methods; 326 IAC 8–1–4 Testing Procedures; 326 IAC 8–2–1 Applicability; 326 IAC 8–3–5 Cold Cleaner Degreaser Operation and Control; 326 IAC 8–3–6 Open Top Vapor Degreaser Operation and Control Requirements; 326 IAC 8–3–7 Conveyorized Degreaser Operation and Control; 326 IAC 8–4–8 Leaks from Petroleum Refineries, Monitoring, Reports; 326 IAC 8–5–5 Graphic Arts Operations.

(88) On February 15, 1990, the Indiana Department of Environmental Management submitted a request to revise the Indiana State Implementation Plan by adding a site specific particulate matter revision for Navistar International Transportation Corporation (Navistar) gray iron foundry and engine plant in Indianapolis, Indiana.

(i) *Incorporation by reference.* (A) Title 326 Air Pollution Control Board, Indiana Administrative Code (IAC) 6–1–12 as amended, effective January 13, 1990.

(89) On July 22, 1991, as supplemented on April 18, 1994, the State submitted regulations adopted by the Indiana Air Pollution Control Board as part of Title 326 of the Indiana Administrative Code for incorporation into the Indiana sulfur dioxide State Implementation Plan.

(i) *Incorporation by reference.* (A) 326 Indiana Administrative Code 7–4–12.1: Gibson County sulfur dioxide emission limitations; effective December 5, 1990. Published in the *Indiana Register*, Volume 14, Number 3, December 1, 1990.

(90) On March 3, 1989, the Indiana Department of Environmental Management submitted a request to revise the Indiana State Implementation Plan (SIP) by adding an emission trade or bubble for Joseph E. Seagram and Sons which is located in Lawrenceburg, Indiana. This requested SIP revision repeals rule 326 Indiana Administrative Code (IAC) 6–1–8, adds a new Section, 326 IAC 6–1–8.1, and amends 326 IAC 6–1–7 to include a reference for the new Section and a recodification of the applicable rule.

(i) *Incorporation by reference.* (A) Title 326 IAC 6–1–7 as published in the Indiana Register Volume 12, Number 6, March 1, 1989, effective April 9, 1989.

(B) Title 326, IAC 6–1–8.1, repeal of 326 IAC 6–1–8 as published in the Indiana Register, Volume 12, Number 6, March 1, 1989, effective March 1, 1989.

(91) [Reserved]

(92) On February 25, 1994, Indiana submitted an employee commute option rule intended to satisfy the requirements of section 182(d)(1)(B) of the Clean Air Act Amendments of 1990.

(i) *Incorporation by reference.* (A) Title 326 of the Indiana Administrative Code, Article 19 MOBILE SOURCE RULES, Rule 1, Employee Commute Options. Filed with the Secretary of State, October 28, 1993, effective November 29, 1993. Published at Indiana Register, Volume 17, Number 3, December 1, 1993.

(93) On February 25, 1994, the Indiana Department of Environmental Management requested a revision to the Indiana State Implementation Plan in the form of Stage II Vapor Recovery Rules as amendments to Title 326 of the Indiana Administrative Code (326 IAC) 8–1–0.5 and 8–4–6.

(i) *Incorporation by reference.* (A) 326 IAC 8–1–0.5 Definitions and 8–4–6 Gasoline dispensing facilities. Filed with the Secretary of State October 28, 1993, effective November 29, 1993. Published at Indiana Register, Volume 17, Number 3, December 1, 1993.

(94) On February 25, 1994, Indiana requested a revision to the State Implementation Plan (SIP) in the form of amendments to Title 326: Air Pollution Control Board of the Indiana Administrative Code (326 IAC) 2–1–1 and 2–1–3 which were intended to satisfy the additional new source review requirements of the Clean Air Act Amendments of 1990. The USEPA, at this time, is also approving the incorporation of permitting rules Recodified as Article 2. Permit Review Rules of 326 IAC into the SIP to replace APC 19 which was incorporated into the Indiana SIP at 40 CFR 52.770 (c)(24).

(i) *Incorporation by reference.* (A) Amendments to Title 326 IAC 2–1–1, 2–1–2, 2–1–3, 2–3–1, 2–3–2, 2–3–3, and 2–3–5. Filed with the Secretary of State November 12, 1993, effective December 13, 1993.

(B) Amendments to Title 326 IAC 2–1–4, 2–1–5, 2–1–6, 2–1–7, 2–1–9, 2–1–10, 2–1–11, 2–1–12, 2–1–13, 2–3–4. Filed with the Secretary of State March 10, 1988, effective April 9, 1988.

(95) On May 22, 1994, the Indiana Department of Environmental Management submitted a request to revise the Indiana State Implementation Plan by adding a lead plan for Marion County which consists of a source specific revision to Title 326 of the Indiana Administrative Code (326 IAC) for Refined Metals.

(i) *Incorporation by reference.* (A) Amendments to 326 IAC 15–1–2 Source-specific provisions. Filed with the Secretary of State March 25, 1994. Effective April 24, 1994. Published at Indiana Register, Volume 17, Number 8, May 1, 1994.

(96) On August 3, 1994 and February 6, 1995, the Indiana Department of Environmental Management submitted a requested SIP revision to the ozone plan for ozone nonattainment areas.

(i) *Incorporation by reference.* (A) Indiana Administrative Code, Title 326: Air Pollution Control Board, Article 1: General Provisions, Rule 2: Definitions, Section 22.5 ''Department'' definition, Section 28.5 ''Federally enforceable'' definition, and Section 64.1 ''Reasonably available control technology'' or ''RACT'' definition. Added at 18 *Indiana Register* 1223–4, effective January 21, 1995.

(B) Indiana Administrative Code, Title 326: Air Pollution Control Board, Article 8: Volatile Organic Compound Rules, Rule 7: Specific VOC Reduction Requirements for Lake, Porter, Clark, and Floyd Counties. Added at 18 *Indiana Register* 1224–9, effective January 21, 1995.

(97) On October 25, 1994, the Indiana Department of Environmental Management requested a revision to the Indiana State Implementation Plan in the form of revisions to State Operating Permit Rules intended to satisfy Federal requirements for issuing federally enforceable State operating permits (FESOP) and thereby exempt certain small emission sources from review under the State's title V operating permit program. This FESOP rule is also approved for the purpose of providing federally enforceable emissions limits on hazardous air pollutants listed under section 112(b) of the Clean Air Act. This revision took the form of an amendment to Title 326: Air Pollution Control Board of the Indiana Administrative Code (326 IAC) 2–8 Federally Enforceable State Operating Permit Program.

(i) *Incorporation by reference.* 326 IAC 2–8 Federally Enforceable State Operating Permit Program. Sections 1 through 17. Filed with the Secretary of State May 25, 1994. Effective June 24, 1994. Published at Indiana Register, Volume 17, Number 10, July 1, 1994.

(98) On October 25, 1994, the Indiana Department of Environmental Management requested a revision to the Indiana State Implementation Plan in the form of revisions to State Operating Permit Rules intended to allow State permitting authorities the option of integrating requirements determined during preconstruction permit review with those required under title V. The State's Enhanced New Source Review provisions are codified at Title 326: Air Pollution Control Board (326 IAC) 2–1–3.2 Enhanced New Source Review.

(i) *Incorporation by reference.* 326 IAC 2–1–3.2 Enhanced new source review. Filed with the Secretary of State May 25, 1994. Effective June 24, 1994. Published at Indiana Register, Volume 17, Number 10, July 1, 1994.

(99) On June 16, 1993, December 9, 1993, September 8, 1994, and November 17, 1994, Indiana submitted a part D particulate matter (PM) nonattainment area plan for the Lake County moderate nonattainment area.

(i) *Incorporation by reference.* (A) Indiana Administrative Code Title 326: Air Pollution Control Board, Article 1: General Provisions, Rule 2: Definitions, Section 32.1: ''Gooseneck cap'' definition, Section 34.1: ''Jumper pipe'' definition, Section 62.1: ''Quench car'' definition, Section 63.1: ''Quench reservoir'' definition, and Section 63.2: ''Quench tower'' definition. Added at 16 *Indiana Register* 2363, effective June 11, 1993.

(B) Indiana Administrative Code Title 326: Air Pollution Control Board, Article 5: Opacity Regulations, Rule 1: Opacity Limitations, Section 1: Applicability of rule, Section 2: Visible emissions limitations, Section 3: Temporary exemptions, Section 4: Compliance determination, Section 5: Violations, and Section 7: State implementation plan revisions. Amended at 16 *Indiana Register* 2363, effective June 11, 1993.

(C) Indiana Administrative Code Title 326: Air Pollution Control Board, Article 6: Particulate Rules, Rule 1: Nonattainment Area Limitations, Opacity Limitations, Section 10.1: Lake County PM10 emissions requirements (subsections a through k), Section 10.2: Lake County PM10 coke battery emissions requirements, and Section 11.1: Lake County fugitive particulate matter control requirements. Added at 16 *Indiana Register* 2363, effective June 11, 1993.

(D) Indiana Administrative Code Title 326: Air Pollution Control Board, Article 11: Emissions Limitations for Specific Types of Operations, Rule 3: Coke Oven Batteries, Section 2: Emissions limitations (subsections a through f, and i), and Section 4: Compliance determination. Amended at 16 *Indiana Register* 2363, effective June 11, 1993.

(100) On August 25, 1995, Indiana submitted a regulation which bans residential open burning in Clark, Floyd, Lake, and Porter Counties in Indiana. The regulation allows residential open burning, with certain restrictions, in other parts of the State, and describes other types of open burning which are allowed in Indiana.

(i) *Incorporation by reference.* (A) Indiana Administrative Code Title 326: Air Pollution Control Board, Article 4: Burning Regulations, Rule 1: Open Burning, Section 3: Exemptions. Added at 18 In. Reg. 2408 Effective June 23, 1995.

(101) On August 25, 1995, Indiana submitted a regulation which reduced the maximum allowable volatility for gasoline sold in Clark and Floyd Counties to 7.8 psi during the summer control period. The summer control period is June 1, to September 15, for retail outlets and wholesale customers, and May 1, to September 15, for all others.

(i) *Incorporation by reference.* 326 Indiana Administrative Code 13–3 Control of Gasoline Reid Vapor Pressure. Sections 1 through 7. Finally adopted by the Indiana Air Pollution Control Board January 11, 1995. Signed by the Secretary of State July 6, 1995. Effective August 5, 1995. Published at Indiana Register, Volume 18, Number 11, August 1, 1995.

(102) On June 6, 1995, and on September 28, 1995 the Indiana Department of Environmental Management submitted State Implementation Plan (SIP) revisions establishing an enhanced inspection and maintenance (I/M) program in accordance with the requirements of the Clean Air Act as amended in 1990. The new enhanced I/M program replaces the basic I/M programs in operation in Lake, Porter, Clark, and Floyd Counties. The Air Pollution Control Board adopted new rule 326 IAC 13–1.1 and repealed existing 326 IAC 13–1, thereby putting in place a revised I/M program.

(i) *Incorporation by reference.* (A) 326 Indiana Administrative Code 13–1.1 adopted April 5, 1995, effective October 1, 1995.

(ii) *Other material.* (A) June 6, 1995 letter and enclosures from the Indiana Department of Environmental Management (IDEM) Commissioner to the Regional Administrator of the United States Environmental Protection Agency (USEPA) submitting Indiana's revision to the ozone State Implementation Plan (SIP).

(B) September 28, 1995 letter and enclosures from the IDEM Assistant Commissioner to the Regional Administrator of USEPA submitting supplemental vehicle inspection and maintenance SIP revision information and documentation.

(103) On August 25, 1995, the State submitted regulations adopted by the Indiana Air Pollution Control Board as part of title 326 of the Indiana Administrative Code for incorporation into the Indiana sulfur dioxide State Implementation Plan.

(i) *Incorporation by reference.* (A) 326 Indiana Administrative Code 7–4–13(3); Dearborn County sulfur dioxide emission limitations; effective May 18, 1995. Published in the *Indiana Register,* Volume 18, Number 9, June 1, 1995.

(104) On December 20, 1995, and February 14, 1996, Indiana submitted a Clean-Fuel Fleet Program for Lake and Porter Counties as a revision to the State Implementation Plan.

(i) *Incorporation by reference.* 326 Indiana Administrative Code 19–3 Clean Fuel Fleet Vehicles, Sections 1 through 7. Adopted by the Indiana Air Pollution Control Board October 4, 1995. Signed by the Secretary of State December 19, 1995. Effective January 18, 1996. Published at Indiana Register, Volume 19, Number 5, February 1, 1996.

(105) On October 25, 1994, the Indiana Department of Environmental Management submitted a requested revision to the Indiana State Implementation Plan in the form of Source Specific Operating Agreement (SSOA) regulations. The SSOA regulations are intended to limit the potential to emit for a source to below the threshold level of Title V of the Clean Air Act. This revision took the form of an amendment to title 326: Air Pollution Control Board of the Indiana Administrative Code (326 IAC) 2–9–1, 2–9–2(a), 2–9–2(b), and 2–9–2(e) Source Specific Operating Agreement Program.

(i) *Incorporation by reference.* 326 Indiana Administrative Code 2–9. Sections 1, 2(a), 2(b), and 2(e). Adopted by the Indiana Air Pollution Control Board March 10, 1994. Signed by the Secretary of State May 25, 1994. Effective June 24, 1994. Published at Indiana Register, Volume 17, Number 10, July 1, 1994.

(106) On September 19, 1995, and November 8, 1995, Indiana submitted automobile and mobile equipment refinishing rules for Clark, Floyd, Lake, and Porter Counties as a revision to the State Implementation Plan. This rule requires suppliers and refinishers to meet volatile organic compound content limits or equivalent control measures for coatings used in automobile and mobile equipment refinishing operations in the four counties, as well as

establishing certain coating applicator and equipment cleaning requirements.

(i) *Incorporation by reference.* 326 Indiana Administrative Code 8–10: Automobile refinishing, Section 1: Applicability, Section 2: Definitions, Section 3: Requirements, Section 4: Means to limit volatile organic compound emissions, Section 5: Work practice standards, Section 6: Compliance procedures, Section 7: Test procedures, Section 8: Control system operation, maintenance, and monitoring, and Section 9: Record keeping and reporting. Adopted by the Indiana Air Pollution Control Board June 7, 1995. Filed with the Secretary of State October 3, 1995. Published at Indiana Register, Volume 19, Number 2, November 1, 1995. Effective November 2, 1995.

(107) On August 8, 1995, Indiana submitted a site specific SIP revision request for Richmond Power and Light in Wayne County Indiana. The submitted revisions provide for revised particulate matter and opacity limitations on the number 1 and number 2 coal fired boilers at Richmond Power and Light's Whitewater Generating Station. The revisions also allow for time weighted averaging of stack test results at Richmond Power and Light to account for soot blowing. Indiana is making revisions to 326 IAC 3–2–1, which currently allows Indiana to authorize alternative emission test methods for Richmond Power and Light. Until the rule is revised to remove this authority, and approved by the United States Environmental Protection Agency, no alternate emission test method, changes in test procedures or alternate operating load levels during testing is to be granted to Richmond Power and Light.

(i) *Incorporation by reference.* Indiana Administrative Code Title 326: Air Pollution Control Board, Article 3: Monitoring Requirements, Rule 2.1: Source Sampling Procedures, Section 5: Specific Testing Procedures; Particulate Matter; Sulfur Dioxide; Nitrogen Oxides; Volatile Organic Compounds; Article 5: Opacity Regulations, Rule 1: Opacity Limitations, Section 2: Visible Emission Limitations; and Article 6: Particulate Rules, Rule 1: Nonattainment Area Limitations, Section 14: Wayne County. Added at 18 In. Reg. 2725. Effective July 15, 1995.

(ii) *Additional information.* (A) August 8, 1995 letter from the Indiana Department of Environmental Management to USEPA Region 5 regarding submittal of a state implementation plan revision for Richmond Power and Light.

(108) On August 29, 1995, Indiana submitted a site specific SIP revision request for Allison Engine Company in Marion County, Indiana. The revision provides limits of 0 tons per year for boilers 2 and 11, which have shut down. The hourly mass limits remain unchanged at 0.337 pounds per million British Thermal Units (lbs/MMBTU) for boilers 1–4 of plant 5, 0.15 lbs/MMBTU for boilers 3–6 of plant 8, and 0.15 lbs/MMBTU for boilers 7–10 of plant 8. The rule provides for a combined limit of 130.0 tons per year for the boilers mentioned above, as well as new limits on the types and amounts of fuel which may be burned at the boilers, and a recordkeeping requirement to document compliance.

(i) *Incorporation by reference.* Indiana Administrative Code Title 326: Air Pollution Control Board, Article 6: Particulate Rules, Rule 1: Nonattainment Area Limitations, Section 12: Marion County. Added at 19 In. Reg. 186. Effective November 3, 1995.

(109) On October 25, 1994, and April 29, 1997, the Indiana Department of Environmental Management requested a revision to the Indiana State Implementation Plan in the form of revisions to the General Provisions and Permit Review Rules intended to update and add regulations which have been effected by recent SIP revisions, and to change regulations for streamlining purposes. This revision took the form of an amendment to Title 326: Air Pollution Control Board of the Indiana Administrative Code (326 IAC) 1–1 Provisions Applicable Throughout Title 326, 1–2 Definitions, 1–6 Malfunctions, 2–1 Construction and Operating Permit Requirements.

(i) *Incorporation by reference.* 326 IAC 1–1–2 and 1–1–3. 326 IAC 1–2–2, 1–2–4, 1–2–12, 1–2–33.1, and 1–2–33.2. 326 IAC 1–6–1. 326 IAC 2–1–1, 2–1–3, and 2–1–10. Adopted by the Indiana Air Pollution Control Board March 10, 1994. Filed with the Secretary of State May 25, 1994. Effective June 24, 1994. Published at Indiana

Register, Volume 17, Number 10, July 1, 1994.

(110) On November 21, 1995, and February 14, 1996, Indiana submitted Municipal Solid Waste (MSW) Landfill rules for Clark, Floyd, Lake, and Porter Counties as a revision to the State Implementation Plan. This rule requires MSW landfills that emit greater than fifty-five tons per day of nonmethane organic compound, or that have a minimum design capacity of one hundred eleven thousand tons (one hundred thousand megagrams) of solid waste, to install a landfill gas collection and control system that either incinerates the gas or recovers the gas for energy use.

(i) *Incorporation by reference.* 326 Indiana Administrative Code 8–8 Municipal Solid Waste Landfills, Section 1 Applicability, Section 2 Definitions, Section 3 Requirements; incorporation by reference of federal standards, Section 4 Compliance deadlines. Adopted by the Indiana Air Pollution Control Board July 12, 1995. Filed with the Secretary of State December 19, 1995. Published at Indiana Register, Volume 19, Number 5, February 1, 1996. Effective January 18, 1996.

(111) On November 21, 1995, and February 14, 1996, Indiana submitted a rule for the control of volatile organic compound emissions from volatile organic liquid storage operations in Clark, Floyd, Lake, and Porter Counties.

(i) *Incorporation by reference.* 326 Indiana Administrative Code 8–9: Volatile Organic Liquid Storage Vessels, Section 1: Applicability, Section 2: Exemptions, Section 3: Definitions, Section 4: Standards, Section 5: Testing and procedures, Section 6: Record keeping and reporting requirements. Adopted by the Indiana Air Pollution Control Board May 3, 1995. Filed with the Secretary of State December 19, 1995. Published at Indiana Register, Volume 19, Number 5, February 1, 1996. Effective January 18, 1996.

(112) [Reserved]

(113) On February 13, 1996, and June 27, 1996, Indiana submitted rules for the control of volatile organic compound emissions from shipbuilding and ship repair operations in Clark, Floyd, Lake, and Porter Counties as a revision to the State Implementation Plan.

(i) *Incorporation by reference.* 326 Indiana Administrative Code 8–12: Shipbuilding or Ship Repair operations in Clark, Floyd, Lake, and Porter Counties, Section 1: Applicability, Section 2: Exemptions, Section 3: Definitions, Section 4: Volatile organic compound emissions limiting requirements, Section 5: Compliance requirements, Section 6: Test methods and procedures, and Section 7: Record keeping, notification, and reporting requirements. Adopted by the Indiana Air Pollution Control Board September 6, 1995. Filed with the Secretary of State April 1, 1996. Published at Indiana Register, Volume 19, Number 8, May 1, 1996. Effective May 1, 1996.

(114) On November 21, 1995, and February 14, 1996, Indiana submitted regulations for wood furniture coating operations in Clark, Floyd, Lake, and Porter Counties as a revision to the State Implementation Plan for ozone.

(i) *Incorporation by reference.* 326 Indiana Administrative Code 8–11 Wood Furniture Coatings, Section 1 Applicability, Section 2 Definitions, Section 3 Emission limits, Section 4 Work practice standards, Section 5 Continuous compliance plan, Section 6 Compliance procedures and monitoring requirements, Section 7 Test procedures, Section 8 Recordkeeping requirements, Section 9 Reporting requirements, Section 10 Provisions for sources electing to use emission averaging. Adopted by the Indiana Air Pollution Control Board May 3, 1995. Filed with the Secretary of State December 5, 1996. Published at Indiana Register, Volume 19, Number 5, February 1, 1996. Effective January 4, 1996.

(115) [Reserved]

(116) On September 20, 1996 the Indiana Department of Environmental Management submitted a request to revise the Indiana State Implementation Plan by adding parachlorobenzotrifluoride (PCBTF), cyclic, branched or linear completely methylated siloxanes and acetone to the definition of ''nonphotochemically reactive hydrocarbon,'' and by deleting ''vegetable oil'' from a list of compounds not considered to be volatile organic compounds (VOC) from the definition of VOC (thus including ''vegetable oil'' as a ''VOC'').

(i) *Incorporation by reference.* (A) 326 IAC 1–2–48 ''nonphotochemically reactive hydrocarbon''. Sections 48(a)(22) ''parachlorobenzotrifluoride'' and (23) ''cyclic, branched, or linear completely methylated siloxanes.'' 326 IAC 1–2–90 ''volatile organic compound (VOC)'' definition. Section 90. Published in Indiana Register, Volume 19, Number 1, October 1, 1995, page 29. Filed with the Secretary of State September 5, 1995, effective October 5, 1995.

(B) 326 IAC 1–2–48 ''nonphotochemically reactive hydrocarbon.'' Section 48(a)(24) ''acetone'' (CAS Number 67–64–1). Published in Indiana Register, Volume 19, Number 10, July 1, 1996, page 2856. Filed with the Secretary of State, May 13, 1996, effective June 12, 1996.

(117) [Reserved]

(118) On July 12, 1995, Indiana submitted as a revision to the State Implementation Plan construction permits CP 019–2110, CP 019–2696, and CP 019–4362, issued under Indiana rule 326 IAC 2–1. The permits establish volatile organic compound control requirements for Rhodes Incorporated's heatset web offset printing presses.

(i) *Incorporation by reference.* Construction Permit CP 019–2110, issued and effective October 15, 1991; Construction Permit CP 019–2696, issued and effective December 18, 1992; Construction permit CP 019–4362, issued and effective April 21, 1995.

(119) Approval—On October 2, 1996, the State of Indiana submitted a State Implementation Plan revision request to eliminate references to total suspended particulates (TSP) while maintaining the existing opacity requirements. The SIP revision became effective July 19, 1996. The SIP revision request satisfies all applicable requirements of the Clean Air Act.

(i) *Incorporation by reference.* 326 Indiana Administrative Code 5–1: Opacity Limitations, Section 1: Applicability of Rule, Section 2: Visible emission limitations. Adopted by the Indiana Air Pollution Control Board April 3, 1996. Filed with the Secretary of State June 19, 1996. Published at the Indiana Register, Volume 19, Number 11, August 1, 1996 (19 IR 3049). Effective July 19, 1996.

(120) On August 26, 1996, Indiana submitted a rule requiring an oxides of nitrogen (NO_X) reasonably available control technology (RACT) rule for the Clark and Floyd Counties moderate ozone nonattainment area as a revision to the State Implementation Plan.

(i) *Incorporation by reference.* 326 Indiana Administrative Code 10: Nitrogen Oxides Rules. Rule 1: Nitrogen Oxides Control in Clark and Floyd Counties. Section 1: Applicability, Section 2: Definitions, Section 3: Requirements, Section 4: Emission limits, Section 5: Compliance procedures, Section 6: Emissions monitoring, and Section 7: Certification, record keeping, and reports. Adopted by the Indiana Air Pollution Control Board February 7, 1996. Filed with the Secretary of State May 13, 1996. Published at Indiana Register, Volume 19, Number 10, July 1, 1996. Effective June 12, 1996.

(121) On January 23, 1997, the Indiana Department of Environmental Management submitted a revision to the State Implementation Plan (SIP) for the general conformity rules. The general conformity SIP revision enables the State of Indiana to implement and enforce the Federal general conformity requirements in the nonattainment and maintenance areas at the State and local level in accordance with 40 CFR part 51, subpart W—Determining Conformity of General Federal Actions to State or Federal Implementation Plans.

(i) *Incorporation by reference.* 326 Indiana Administrative Code 16–3: General Conformity, Section 1: Applicability; incorporation by reference of Federal standards. Adopted by the Indiana Air Pollution Control Board April 3, 1996. Filed with the Secretary of State June 6, 1996. Published at the Indiana Register, Volume 19, Number 11, August 1, 1996 (19 IR 3050). Effective July 6, 1996.

(122) On July 24, 1997, Indiana submitted rules requiring record keeping and reporting requirements for graphic arts sources of volatile organic compounds and amended source applicability requirements for graphic arts sources located in Lake and Porter Counties as a revision to the State Implementation Plan.

(i) *Incorporation by reference.* (A) 326 IAC 8–1–9 General record keeping and reporting requirements. 326 IAC 8–1–10

Compliance certification, record keeping, and reporting requirements for certain coating facilities using compliant coatings. 326 IAC 8–1–11 Compliance certification, record keeping, and reporting requirements for certain coating facilities using daily weighted averaging. 326 IAC 8–1–12 Compliance certification, record keeping, and reporting requirements for certain coating facilities using control devices. Adopted by the Indiana Air Pollution Control Board November 6, 1996. Filed with the Secretary of State April 22, 1997. Published at Indiana Register, Volume 20, Number 9, June 1, 1997. Effective May 22, 1997.

(B) 326 IAC 8–5–5 Graphic arts operations. Adopted by the Indiana Air Pollution Control Board November 6, 1996. Filed with the Secretary of State April 22, 1997. Published at Indiana Register, Volume 20, Number 9, June 1, 1997. Effective May 22, 1997.

(123) On July 9, 1997, Indiana submitted a site specific SIP revision request for the University of Notre Dame in Saint Joseph County, Indiana. The submitted revision amends 326 IAC 6–1–18, and provides for revised particulate matter and heat input limitations on the five boilers at Notre Dame's power plant.

(i) *Incorporation by reference.* Indiana Administrative Code Title 326: Air Pollution Control Board, Article 6: Particulate Rules, Rule 1: Nonattainment Area Limitations, Section 18: St. Joseph County. Added at 20 In. Reg. 2299. Effective May 22, 1997.

(124) On February 3, 1999, and May 17, 2000, Indiana submitted revised particulate matter emissions regulations for Allison Transmission in Marion County, Indiana. The submittal amends 326 IAC 6–1–12, and includes the combination of annual emissions limits for 5 boilers into one overall limit as well as new recordkeeping requirements.

(i) *Incorporation by reference.* Emissions limits and recordkeeping requirements for Allison Transmission in Marion County contained in Indiana Administrative Code Title 326: Air Pollution Control Board, Article 6: Particulate Rules, Rule 1: Nonattainment Area Limitations, Section 12: Marion County. Added at 22 In. Reg. 416. Effective October 16, 1998.

(125) On April 6, 1999, Indiana submitted amended rules for the control of volatile organic compound emissions from vehicle refueling in Clark, Floyd, Lake, and Porter Counties as a revision to the State Implementation Plan.

(i) *Incorporation by reference.* 326 Indiana Administrative Code 8–1: General Provisions, Section 0.5: Definitions and 326 Indiana Administrative Code 8–4: Petroleum Sources, Section 6: Gasoline Dispensing Facilities. Adopted by the Indiana Air Pollution Control Board May 3, 1995. Filed with the Secretary of State September 18, 1995. Published at Indiana Register, Volume 19, Number 2, November 1, 1995. Effective October 18, 1995.

(126) On August 18, 1999, Indiana submitted amendments to the State's automobile refinishing rule for Lake, Porter, Clark, and Floyd Counties.

(i) *Incorporation by reference.* 326 Indiana Administrative Code 8–10: Automobile Refinishing, Section 1: Applicability, Section 5: Work practice standards, Section 6: Compliance procedures, Section 9: Recordkeeping and reporting. Adopted by the Indiana Air Pollution Control Board February 4, 1998. Filed with the Secretary of State July 14, 1998. Published at Indiana Register, Volume 21, Number 12, page 4518, September 1, 1998. Effective August 13, 1998.

(127) On August 18, 1999, Indiana submitted rules for controlling Volatile Organic Compound (VOC) emissions in Vanderburgh County. The rules contain control requirements for Stage I gasoline vapor recovery equipment, and a requirement for automobile refinishers to use special coating application equipment (automobile refinishing spray guns) to reduce VOC.

(i) *Incorporation by reference.* (A) 326 Indiana Administrative Code 8–4: Petroleum Sources, Section 1: Applicability, Subsection (c). Adopted by the Indiana Air Pollution Control Board November 4, 1998. Filed with the Secretary of State April 23, 1999. Published at Indiana Register, Volume 22, Number 9, June 1, 1999. Effective May 23, 1999.

(B) 326 Indiana Administrative Code 8–10: Automobile Refinishing, Section

1: Applicability, Section 3: Requirements. Adopted by the Indiana Air Pollution Control Board November 4, 1998. Filed with the Secretary of State April 23, 1999. Published at Indiana Register, Volume 22, Number 9, June 1, 1999. Effective May 23, 1999.

(128) [Reserved]

(129) On May 18, 1999, the Indiana Department of Environmental Management submitted revised site-specific lead emission limits for Hammond Group—Halstab Division located in Hammond (Lake County), Indiana. The revised emission limits are expressed as pounds-per-hour limits ranging from 0.04 to 0.07 applicable to sixteen separate emissions points. The revised emission limits will result in the reduction of total allowable lead emissions from 31,546 pounds per year as provided for in the current federally-approved State Implementation Plan to 6,832.8 pounds per year.

(i) *Incorporation by reference.* (A) Indiana Administrative Code 326: Air Pollution Control Board, Article 15 Lead, Rule 1 Lead Emissions Limitations, Section 2—Source Specific Provisions, subsection (a), subdivision 7, clauses (A) through (G). Amended at 22 Indiana Register 1427, effective February 5, 1999.

(130) On February 3, 1999, Indiana submitted a site specific SIP revision request for the Central Soya Company, Incorporated, Marion County, Indiana. The submitted revision amends 326 IAC 6–1–12(a), and provides for revised particulate matter emission totals for a number of source operations at the plant. The revision reflects the closure of nine operations and the addition of five new ones, resulting in a net reduction in particulate matter emissions.

(i) *Incorporation by reference.* The entry for Central Soya Company, Incorporated contained in Indiana Administrative Code Title 326: Air Pollution Control Board, Article 6: Particulate Rules, Rule 1: Nonattainment Area Limitations, Section 12: Marion County. Subsection (a) amended at 22, Indiana Register 416, effective October 16, 1998.

(131) On April 6, 1999, Indiana submitted rules for the control of volatile organic compound emissions from steel mill sinter plant operations in Lake and Porter Counties as a revision to the State Implementation Plan.

(i) *Incorporation by reference.*

326 Indiana Administrative Code 8–13: Sinter Plants. Adopted by the Indiana Air Pollution Control Board March 4, 1998. Filed with the Secretary of State June 24, 1998. Published at Indiana Register, Volume 21, Number 11, August 1, 1998. Effective July 24, 1998.

(132) On February 3, 1999, Indiana submitted revised particulate matter emissions regulations for Dubois County, Indiana. The submitted revision amends 326 IAC 6–1–9, and includes relaxation of some PM limits, the elimination of limits for boilers which are no longer operating, updated facility names, and changes to boiler fuel types.

(i) *Incorporation by reference.* Indiana Administrative Code Title 326: Air Pollution Control Board, Article 6: Particulate Rules, Rule 1: Nonattainment Area Limitations, Section 9: Dubois County. Added at 22 In. Reg. 423. Effective October 18, 1998.

(133) On November 22, 1999, Indiana submitted revised particulate matter emissions regulations for Indianapolis Power and Light Company in Marion County, Indiana. The submittal amends 326 IAC 6–1–12, and includes relaxation of some PM limits, tightening of other limits, and the elimination of limits for several boilers which are no longer operating. The revisions also include the combination of annual emissions limits for several boilers, and correction of a typographical error in one limit.

(i) *Incorporation by reference.* Emissions limits for Indianapolis Power and Light in Marion County contained in Indiana Administrative Code Title 326: Air Pollution Control Board, Article 6: Particulate Rules, Rule 1: Nonattainment Area Limitations, Section 12: Marion County, subsection (a). Added at 22 In. Reg. 2857. Effective May 27, 1999.

(134) On February 3, 1999, the State of Indiana submitted a revision to particulate matter limitations for the Lever Brothers facility in Lake County. On December 28, 1999, Indiana submitted revisions to particulate matter and sulfur dioxide limitations for NIPSCo's Dean Mitchell Station.

(i) *Incorporation by reference.* (A) Title 326 of the Indiana Administrative Code (326 IAC) 6–1–10.1 (d)(28) and (d)(33), filed with the Secretary of State on May 13, 1999, effective June 12, 1999. Published at Indiana Register Volume 22, Number 10, July 1, 1999 (22 IR 3047).

(B) Title 326 of the Indiana Administrative Code (326 IAC) 7–4–1.1 (c)(17), filed with the Secretary of State on May 13, 1999, effective June 12, 1999. Published at Indiana Register Volume 22, Number 10, July 1, 1999 (22 IR 3070).

(135) On January 1, 2000, Indiana submitted revised opacity limits for three processes at ALCOA Warrick Operations. The revised limits allow higher opacity emissions during fluxing operations at three casting complexes. This action does not change mass emissions limits for these sources.

(i) *Incorporation by reference.* (A) Modifications to Operating Permits OP 87–07–91–0112 thru 0116: Permit I.D. 173–10913, Issued on October 1, 1999, to ALCOA, Inc.—Warrick Operations. Effective October 1, 1999.

(B) Modifications to Operating Permit OP 87–07–91–0113: Permit I.D. 173–11414, Issued on December 15, 1999, to ALCOA, Inc.—Warrick Operations. Effective December 15, 1999.

(136) On August 30, 1999, and May 17, 2000, Indiana submitted revised particulate matter and sulfur dioxide emissions regulations for National Starch in Marion County, Indiana. The submittal amends 326 IAC 6–1–12, and includes elimination of shut down sources from the rules, increases in some limits, and a decrease in one limit.

(i) *Incorporation by reference.*

(a) Emissions limits for National Starch in Marion County contained in Indiana Administrative Code Title 326: Air Pollution Control Board, Article 6: Particulate Rules, Rule 1: Nonattainment Area Limitations, Section 12: Marion County. Added at 22 In. Reg. 1953. Effective March 11, 1999.

(b) Emissions limits for National Starch in Marion County contained in Indiana Administrative Code Title 326: Air Pollution Control Board, Article 7: Sulfur Dioxide Rules, Rule 4: Emission Limitations and Requirements by County, Section 2: Marion County Sulfur Dioxide Emission Limitations. Added at 22 In. Reg. 1953. Effective March 11, 1999.

(138) On August 2, 2000, Indiana submitted revised total suspended particulate emissions regulations for Illinois Cereal Mills, Incorporated in Marion County, Indiana. The submittal amends 326 IAC 6–1–12(a). It includes an increase in the annual particulate matter limit from 0.7 tons per year (TPY) to 1.0 TPY for a boiler and a decrease in the annual limit from 6.3 TPY to 6.0 TPY for a grain elevator.

(i) *Incorporation by reference.*

Emissions limits for Illinois Cereal Mills, Incorporated in Marion County contained in Indiana Administrative Code Title 326: Air Pollution Control Board, Article 6: Particulate Rules, Rule 1: Non-attainment Area Limitations, Section 12: Marion County, subsection (a). Filed with the Secretary of State on May 26, 2000 and effective on June 25, 2000. Published in 23 *Indiana Register* 2414 on July 1, 2000.

(139) On December 30, 1999, Indiana submitted revised total suspended particulate emissions regulations for Johns Manville Corporation in Wayne County. The submittal appends 326 IAC 6–1–14. It includes raising seven long-term emissions limits, lowering one short-term limit, removing one emissions source, and a name change for the company. The long-term limits are being raised to allow to facility to operate 8760 hours annually. Switching fuel for a boiler allows its short-term limit to be decreased. One emissions source was removed from this facility. The Johns Manville, Wayne County, facility was formerly known as Schuller International, Incorporated.

(i) *Incorporation by reference.*

Emissions limits for Johns Manville Corporation in Wayne County contained in Indiana Administrative Code Title 326: Air Pollution Control Board, Article 6: Particulate Rules, Rule 1: Non-attainment Area Limitations, Section 14: Wayne County. Filed with the Secretary of State on September 24, 1999, and effective on October 24, 1999. Published in 23 *Indiana Register* 301 on November 1, 1999.

(140) On August 31, 2000, Indiana submitted revised particulate matter emissions regulations for Rolls-Royce Allison in Marion County, Indiana. The

submittal amends 326 IAC 6–1–12(a). It includes a name change for the company from the Allison Engine Company to Rolls-Royce Allison and the addition of an alternate fuel, landfill gas. Landfill gas can be used in boilers 1 through 4 of plant 5 and boilers 3, 4, and 7 through 10 of plant 8. These state implementation plan revisions do not change the particulate matter emissions limits.

(i) *Incorporated by reference.* Amendments to Indiana Administrative Code Title 326: Air Pollution Control Board, Article 6: Particulate Rules, Rule 1: Non-attainment Area Limitations, Section 12: Marion County, subsection (a). Filed with the Secretary of State on May 26, 2000 and effective on June 25, 2000. Published in 23 *Indiana Register* 2419 on July 1, 2000.

(141) On February 16, 2001 Indiana submitted revised particulate matter emissions regulations for Cerestar USA, Inc. The submittal amends 326 IAC 6–1–10.1, and includes the elimination of 18 emission points, the addition of 39 new emission points, and a change in the way the short-term emission limits are expressed (from pounds of particulate matter per ton of product to grains per dry standard cubic feet). The revision also changes the name of the facility listed in the rules from American Maize Products (Amaizo) to Cerestar USA, Inc.

(i) *Incorporation by reference.* Emissions limits for Cerestar USA, Inc. in Lake County contained in Indiana Administrative Code Title 326: Air Pollution Control Board, Article 6: Particulate Rules, Rule 1: Nonattainment Area Limitations, Section 10.1: Lake County PM_{10} emission requirements. Added at 24 In. Reg. 1308. Effective January 13, 2001.

(142) On June 8, 2000 the Indiana Department of Environmental Management submitted a State Implementation Plan (SIP) revision amending certain provisions of the Indiana vehicle inspection and maintenance (I/M) program in operation in Lake, Porter, Clark, and Floyd Counties. Among the most significant changes being made to the program include: the exemption of the current calendar year model vehicle plus the (3) previous model years vehicles from emission testing; the inclusion of language that allows the use of the IM93 alternative vehicle emission test currently being used in the program; language that updates the requirement to test vehicles equipped with second generation on-board diagnostics systems (OBDII); and the elimination of the off-cycle test, which is the emission test currently required when there is a change in possession of motor vehicle titles. The Air Pollution Control Board amended 326 IAC 13–1.1 and repealed 326 IAC 13–1.1–17, thereby putting in place the revisions to the I/M program.

(i) *Incorporation by reference.* (A) 326 Indiana Administrative Code 13–1.1 adopted December 2, 1998, effective January 22, 1999.

(ii) *Other material.* (A) June 8, 2000 letter and enclosures from the Indiana Department of Environmental Management (IDEM) Commissioner to the Regional Administrator of the United States Environmental Protection Agency (USEPA) submitting Indiana's revision to the ozone State Implementation Plan (SIP).

(143) On November 15, 2000, the State submitted rules to reduce volatile organic compound emissions from cold cleaning degreasing.

(i) *Incorporation by reference.* 326 Indiana Administrative Code 8–3: Organic Solvent Degreasing Operations, Section 1, Applicability, and Section 8, Material Requirements for Cold Cleaning Degreasers. Final adoption by the Indiana Air Pollution Control Board on November 4, 1998. Filed with the Secretary of State on April 27, 1999. Effective May 27, 1999. Published at Indiana Register, Volume 22, Number 9, June 1, 1999.

(144) On August 20, 2001 and September 19, 2001, Indiana submitted a plan in response to Phase I of the NO_X SIP Call. The plan includes Indiana's Phase I NO_X Budget Demonstration and supporting documentation including initial unit allocations and two new rules: 326 IAC 10–3 and 326 IAC 10–4.

(i) *Incorporation by reference.* (A) Indiana Administrative Code Title 326: Air Pollution Control Board, Article 10; Ozone rules, Rule 3: Nitrogen Oxide Reduction Program for Specific Source Categories (326 IAC 10–3). Adopted June

6, 2001. Submitted August 20, 2001 and September 19, 2001. State effective September 16, 2001.

(B) Indiana Administrative Code Title 326: Air Pollution Control Board, Article 10; Ozone rules, Rule 4: Nitrogen Oxides Budget Trading Program (326 IAC 10–4). Adopted June 6, 2001. Submitted August 20, 2001 and September 19, 2001. State effective September 16, 2001.

(145) Indiana submitted on December 17, 1997, as part of the 9% Rate of Progress Plan, an agreed order between U.S. Steel and the Indiana Department of Environmental Management. Section 3 of Exhibit E requires U.S. Steel to establish a coke plant process water treatment plant at its Gary Works.

(i) *Incorporation by reference.* (A) Section 3 of Exhibit E of the March 22, 1996, Agreed Order between U.S. Steel (currently USX Corporation) and the Indiana Department of Environmental Management.

(146) On October 21, 1999, Indiana submitted revised state opacity regulations. The submittal amends 326 IAC 5–1–1, 5–1–2, 5–1–3, 5–1–4(b), and 5–1–5(b). The revisions address provisions concerning the startup and shutdown of operations, averaging period terminology, temporary exemptions, alternative opacity limits, and conflicts between continuous opacity monitor and visual readings.

(i) *Incorporation by reference.* Opacity limits for Indiana contained in Indiana Administrative Code Title 326: Air Pollution Control Board, Article 5: Opacity Regulations. Filed with the Secretary of State on October 9, 1998 and effective on November 8, 1998. Published in 22 *Indiana Register* 426 on November 1, 1998.

(ii) *Additional material.* Letter of October 10, 2001, from Janet McCabe, Indiana Department of Environmental Management, Assistant Commissioner of the Office of Air Quality, to Stephen Rothblatt, US EPA Region 5, Chief of Air Programs Branch. The letter adds the technical justification and air quality analysis required for alternate opacity limits.

(147) On February 1, 2002, Indiana submitted its Prevention of Significant Deterioration rules as a revision to the State implementation plan.

(i) *Incorporation by reference.* (A) Title 326 of the Indiana Administrative Code, Rules 2–2–1, 2–2–2, 2–2–3, 2–2–4, 2–2–5, 2–2–6, 2–2–7, 2–2–9, 2–2–12, and 2–2–14. Filed with the Secretary of State on December 20, 2001, effective January 19, 2002.

(B) Title 326 of the Indiana Administrative Code, Rules 2–2–8, 2–2–10, 2–2–11, 2–2–13, 2–2–15 and 2–2–16. Filed with the Secretary of State on March 23, 2001, effective April 22, 2001.

(C) Title 326 of the Indiana Administrative Code, Rules 2–1.1–6 and 2–1.1–8. Filed with the Secretary of State on November 25, 1998, effective December 25, 1998. Errata filed with the Secretary of State on May 12, 1999, effective June 26, 1999.

(148) On August 8, 2001, the State submitted rules to incorporate by reference Federal capture efficiency test methods. The submittal amends 326 IAC 8–1–4.

(i) *Incorporation by reference.*

Title 326: Air Pollution Control Board; Article 8: Volatile Organic Compound Rules; Rule 1: General Provisions; Section 4: Testing procedures. Filed with the Secretary of State on June 15, 2001 and effective on July 15, 2001. Published in 24 *Indiana Register* 3619 on August 1, 2001.

(149) [Reserved]

(150) On July 18, 2000 the Indiana Department of Environmental Management submitted a State Implementation Plan (SIP) revision amending certain provisions of Indiana's gasoline transport testing requirements with additional material submitted on January 11, 2002 and March 13, 2002. The Air Pollution Control Board amended 326 IAC 8–4–7 and 326 IAC 8–4–9 and added 326 IAC 20–10.

(i) *Incorporation by reference.* (A) 326 Indiana Administrative Code 8–4–7; 8–4–9; and 20–10–01 adopted May 5, 1999, effective November 5, 1999.

(ii) *Additional materials.* (A) July 18, 2000 letter and enclosures from the Indiana Department of Environmental Management (IDEM) Commissioner to the Regional Administrator of the United States Environmental Protection Agency (EPA) submitting Indiana's revision to the ozone SIP.

(B) January 11, 2002 letter and enclosures from IDEM to EPA submitted as

an addendum to the July 18, 2000 revision to the ozone SIP.

(C) March 13, 2002 letter and enclosures from IDEM to EPA submitted as an addendum to the July 18, 2000 revision to the ozone SIP.

(151) On March 5, 2002, the Indiana Department of Environmental Management requested a revision to the Indiana State Implementation Plan in the form of revisions to the Permit Review Rules intended to add regulations to assure that construction permit conditions exist independently of title V permits. This revision took the form of an amendment to Title 326: Air Pollution Control Board of the Indiana Administrative Code (326 IAC) 2–1.1–9.5 General Provisions; Term of Permit.

(i) *Incorporation by reference.* (A) Indiana Administrative Code Rules 326 IAC 2–1.1–9.5. Adopted by the Indiana Air Pollution Control Board October 3, 2001. Filed with the Secretary of State December 20, 2001. Effective January 19, 2002. Published at Indiana Register, Volume 25, Number 5, February 1, 2002.

(152) On December 19, 2001, Indiana submitted revised Particulate Matter (PM) control requirements. A March 17, 2003 letter from Indiana clarified what portions of the original submission the State was seeking revisions for. EPA is approving revisions for certain natural gas combustion sources in Indiana and various cleanup revisions to Indiana's PM rules. One revision eliminates PM emissions limits on specified natural gas combustion sources and replaces the limits with a requirement that such sources may only burn natural gas. The submission also contains many cleanup provisions such as eliminating limits for sources which have shut down and updating names of sources.

(i) *Incorporation by reference.* (A) Indiana Administrative Code (IAC) Title 326: Air Pollution Control Board, Article 6: Particulate Rules, Rule 1: Non-attainment Area Limitations, IAC 6–1–1.5: Definitions; IAC 6–1–2: Particulate emission limitations; fuel combustion steam generators, asphalt concrete plant, grain elevators, foundries, mineral aggregate operations; modification by commissioner; IAC 6–1–3: Non-attainment area particulate limitations; compliance determination; IAC 6–1–4: Compliance schedules; IAC 6–1–5: Control strategies; IAC 6–1–6: State Implementation Plan revisions; IAC 6–1–8.1: Dearborn County particulate matter emissions limitations; IAC 6–1–9: Dubois County; IAC 6–1–10.1: Lake County PM_{10} emission requirements, Subsections (a) through (k); IAC 6–1–11.1: Lake County fugitive particulate matter control requirements; IAC 6–1–12: Marion County; IAC 6–1–13: Vigo County; IAC 6–1–14: Wayne County; IAC 6–1–15: Howard County; IAC 6–1–16: Vanderburgh County; IAC 6–1–17: Clark County; and, IAC 6–1–18: St. Joseph County. Adopted by the Indiana Air Pollution Control Board August 1, 2001. Filed with the Secretary of State November 8, 2001. Published in the *Indiana Register*, Volume 25, Number 3, December 1, 2001 at 709. State effective December 8, 2001.

(B) Indiana Administrative Code (IAC) Title 326: Air Pollution Control Board, Article 6: Particulate Rules, Rule 1: Non-attainment Area Limitations, 6–1–1: Applicability. Adopted by the Indiana Air Pollution Control Board August 1, 2001. Filed with the Secretary of State November 8, 2001. Published in the *Indiana Register*, Volume 25, Number 3, December 1, 2001 at 709. State effective, December 8, 2001. Amended by Errata filed with the Secretary of State January 10, 2002. Published in the *Indiana Register*, Volume 25, Number 5, February 1, 2002 at 1644. State effective, February 24, 2002. And amended by Errata filed with the Secretary of State October 2, 2002. Published in the *Indiana Register*, Volume 26, Number 2, November 1, 2002 at 383. State effective, November 16, 2002.

(153) On April 30, 2002 and September 6, 2002, Indiana submitted revised particulate matter regulations for Union Tank Car's railcar manufacturing facility in Lake County, Indiana. The submittal amends 326 IAC 6–1–10.1. The revisions consist of relaxing the limits for the grit blaster. The new limits are 0.01 grains per dry standard cubic foot and 9.9 pounds per hour.

(i) *Incorporation by reference.*

Amendments to Indiana Administrative Code Title 326: Air Pollution Control Board, Article 6: Particulate Rules, Rule 1: Non-attainment Area Limitations, Section 10.1: Lake County

PM_{10} emission requirements. Filed with the Secretary of State on July 26, 2002 and effective on August 25, 2002. Published in 25 *Indiana Register* 4076 on September 1, 2002.

(154) On August 08, 2001, Indiana submitted revised volatile organic Compound control requirements for certain facilities in the Indiana shipbuilding and ship repair industry. This submittal changes the individual and plantwide coating exemption levels and makes revisions to the compliance requirements, test methods and recordkeeping requirements. On October 1, 2002, Indiana submitted a letter providing its interpretation of certain of the above requirements.

(i) *Incorporation by reference.* (A) Indiana Administrative Code Title 326: Air Pollution Control Board, Article 8: Volatile Organic Compounds, Rule 12: Shipbuilding or Ship Repair Operations in Clark, Floyd, Lake, and Porter Counties, Section 2: Exemptions, Section 4: Volatile organic compound emissions limiting requirements, Section 5: Compliance requirements, Section 6: Test methods and procedures, Section 7: Recordkeeping, notification, and reporting requirements. Adopted by the Indiana Air Pollution Control Board on February 7, 2001. Filed with the Secretary of State June 15, 2001, effective July 15, 2001.

(B) An October 1, 2002, letter from the Indiana Department of Environmental Management which provides background information on its shipbuilding and ship repair rule revisions and its interpretation of certain of these requirements.

(155) On October 17, 2002, the State submitted revised particulate matter emission limits for the Knauf Fiber Glass in Shelby County for incorporation into the Indiana SIP.

(i) Incoropration by reference.

(A) Indiana Administrative Code Title 326: Air Pollution Control Board, Article 11 Emission Limitations for Specific Types of Operations, Rule 4 Fiberglass Insulation Manufacturing, Paragraph 5 Shelby County (326 IAC 11–4–5). Adopted by the Indiana Air Pollution Control Board on May 1, 2002. Filed with the Secretary of State on August 28, 2002. Published in the *Indiana Register*, Volume 26, Number 1, October 1, 2002, effective September 27, 2002.

(156) On April 3, 2000 the State submitted a revision to Indiana's State Implementation Plan to allow the Department of the Navy use of military specification coatings containing volatile organic compound (VOC) control requirements with content up to 5.45 pounds of VOC per gallon of coating less water for the projectile renovations operations in Building 2728 at the Naval Surface Warfare Center, Crane Division.

(i) *Incorporation by reference.* (A) Part 70 Significant Source Modification No.: 101–11153–00005 as issued by the Indiana Air Pollution Control Board on October 12, 1999.

(157) On December 19, 2001, and February 11, 2004, Indiana submitted revised volatile organic compound (VOC) emissions regulations for Eli Lilly and Company in Marion County. The submission provides alternate VOC control requirements for reactors, vacuum dryers, centrifuges, and filters in the pilot plant. The alternate control requirements are being approved under site-specific Reasonably Available Control Technology standards.

(i) *Incorporation by reference.* (A) Commissioner's Order #2003–02 as issued by the Indiana Department of Environmental Management on February 11, 2004.

(158) On October 21, 2002 and January 10, 2003, Indiana submitted revised volatile organic compound regulations for dip and flow coating operations. The revisions include replacing daily compliance with a rolling thirty day average and adding new equivalent emission limits.

(i) *Incorporation by reference.* Amendments to Indiana Administrative Code Title 326: Air Pollution Control Board, Article 8: Volatile Organic Compound Rules, Rule 1: General Provisions, Section 2: Compliance Methods. Filed with the Secretary of State on November 15, 2002, and effective on December 15, 2002. Published in 26 *Indiana Register* 1073 on January 1, 2003.

(159) On January 31, 2003, Indiana submitted revised particulate matter regulations for Richmond Power and Light Company's coal burning power plant in Wayne County, Indiana. The

submission amends 326 IAC 6–1–14. The revisions make the long-term emission limits consistent with the short-term limits approved by EPA on April 9, 1996. The new limits are 320 tons per years for boiler number 1 and 700 tons per years for boiler number 2.

(i) *Incorporation by reference.* Amendments to Indiana Administrative Code Title 326: Air Pollution Control Board, Article 6: Particulate Rules, Rule 1: Non-attainment Area Limitations, Section 14: Wayne County PM emission requirements. Filed with the Secretary of State on March 10, 2003 and effective on April 9, 2003. Published in 26 *Indiana Register* 2318–19 on April 1, 2003.

(160) On July 9, 2002, Indiana submitted revised process weight rate rules as a requested revision to the Indiana State Implementation Plan. The changes clarify rule applicability, correct errors in the process weight rate table, allow sources to substitute work standard practices instead of the process weight rate table. They clarify the definitions of particulate and particulate matter. They also reduce duplicative recordkeeping.

(i) *Incorporation by reference.* (A) Indiana Administrative Code Title 326: Air Pollution Control Board, Article 6: Particulate Rules Rule 3: Particulate Emission Limitations for Manufacturing Process. 6–3–1 Applicability, 6–3–1.5 Definitions and 6–3–2 Particulate emission limitations, work practices, and control technologies. Adopted by the Indiana Air Pollution Control Board on February 6, 2002. Filed with the Secretary of State May 13, 2002, effective June 12, 2002.

(161) On October 30, 2002 and January 10, 2003, the Indiana Department of Environmental Management submitted revisions to Chapter 326 IAC 4–2 and 9–1 of the Indiana Administrative Code (IAC), an incineration plan for selected sources in Indiana, with a request that the Indiana State Implementation Plan be revised to include these amended carbon monoxide and particulate matter rules.

(i) *Incorporation by reference.* (A) *Indiana rule:* 326 IAC 4–2–1 and 326 IAC 4–2–2 (particulate matter), published at *Indiana Register*, January 1, 2003, 26 IR 1070, with an effective date of December 15, 2002.

(B) *Indiana rule:* 326 IAC 9–1–1 and 326 IAC 9–1–2 (carbon monoxide), published at *Indiana Register*, January 1, 2003, 26 IR 1072, with an effective date of December 15, 2002.

(162) On January 7, 2003 the Indiana Department of Environmental Management submitted a State Implementation Plan (SIP) revision amending certain provisions of Indiana's 326 IAC 8–2–9 (Miscellaneous metal coating operations) and 326 IAC 13–3–1 (Applicability, Control of gasoline Reid vapor pressure).

(i) *Incorporation by reference.* (A) 326 Indiana Administrative Code 8–2–9; and 13–3–1 adopted August 7, 2002, effective December 15, 2002.

(ii) *Additional materials.* (A) January 7, 2003 letter and enclosures from the Indiana Department of Environmental Management (IDEM) Commissioner to the Regional Administrator of the United States Environmental Protection Agency (EPA) submitting Indiana's revisions to the ozone SIP.

(163) On June 26, 2003, the Indiana Department of Environmental Management (IDEM) submitted revisions to 326 IAC 10–3 (NO_X Reduction Program for Specific Source Categories) and 326 IAC 10–4 (NO_X Budget Trading Program) of the Indiana Administrative Code (IAC). Also, on August 4, 2003, IDEM submitted a letter containing the Legislative Service Agency Document #00–54(F) as published in the Indiana Register on August 1, 2003, 26 IR 3550, containing the legal and approving signatures. The revised rules change the Indiana Phase I NO_X budget to 233,548 tons per ozone season for 2007.

(i) *Incorporation by reference.* (A) Indiana Pollution Control Board rules: 326 IAC 10–3–1 and 326 IAC 10–4–1, 10–4–2, 10–4–9, 10–4–10, 10–4–13, 10–4–14 and 10–4–15. Adopted by the Indiana Pollution Control Board on May 7, 2003. Filed with the Secretary on July 7, 2003. Published at Indiana Register Volume 26, Number 11, August 1, 2003 (26 IR 3550). Effective August 6, 2003.

(164) On June 13, 2003, and as supplemented on October 3, 2003, Indiana submitted a State Implementation Plan (SIP) revision for the control of emissions of particulate matter (PM_{10}) in the state of Indiana. Revisions to 326 IAC 6–1–10.1 and 326 IAC 6–1–10.2 amend

the PM_{10} emission limits at U.S. Steel-Gary Works and U.S. Steel-Gary Coke Operations, located in Lake County, Indiana, and should result in decreased PM_{10} emissions of approximately 350 tons per year.

(i) *Incorporation by reference.* The following sections of the Indiana Administrative Code are incorporated by reference.

(A) Amendments to Indiana Administrative Code Title 326: Air Pollution Control Board, Article 6: Particulate Rules, Rule 1: Non-attainment Area Limitations, Section 10.1: Lake County PM_{10} emission requirements. Filed with the Secretary of State on August 6, 2003 and effective on September 5, 2003. Published at Indiana Register, Volume 27, Number 1, October 1, 2003 (27 IR 61).

(B) Amendments to Indiana Administrative Code Title 326: Air Pollution Control Board, Article 6: Particulate Rules, Rule 1: Non-attainment Area Limitations, Section 10.2: Lake County PM_{10} coke battery emission requirements. Filed with the Secretary of State on August 6, 2003 and effective on September 5, 2003. Published at Indiana Register, Volume 27, Number 1, October 1, 2003 (27 IR 85).

(165) On January 16, 2004 Indiana submitted revised Prevention of Significant Deterioration rules as a revision to the Indiana State Implementation Plan.

(i) *Incorporation by reference.* (A) Amendments to the Indiana Administrative Code, Title 326: Air Pollution Control Board; Article 2: Permit Review Rules; Rule 2: Prevention of Significant Deterioration (PSD) Requirements; Section 2–2–1 Definitions; Section 2–2–6 Increment consumption; requirements; and Section 2–2–12 Permit rescission. Filed with the Secretary of State on March 9, 2004, effective April 8, 2004. Published at 27 Indiana Register 2216; April 1, 2004.

(166)–(167) [Reserved]

(168) On October 7, 2004, Indiana submitted a request revision to particulate matter and sulfur dioxide emission limits as an amendment to its State Implementation Plan. The particulate matter and sulfur dioxide emission limits were deleted for the five boilers removed from the Pfizer, Incorporated facility in Vigo County, Indiana. These limits were listed in 326 Indiana Administrative Code (IAC) 6–1–13 and 326 IAC 7–4–3.

(i) *Incorporation by reference.* Indiana Administrative Code Title 326: Air Pollution Control Board, Article 6: Particulate Rules, Rule 1: County Specific Particulate Limitations, Section 13: Vigo County and Title 326: Air Pollution Control Board, Article 7: Sulfur Dioxide Rules, Rule 4: Emission Limitations and Requirements by County, Section 3: Vigo County Sulfur Dioxide Emission Limitations. Filed with the Secretary of State on August 31, 2004 and effective September 30, 2004. Published in 28 *Indiana Register* 115–18 on October 1, 2004.

(169) On December 22, 2004, Indiana submitted a request to revise the volatile organic compound requirements for Transwheel Corporation of Huntington County, Indiana. EPA is approving the oil cover as an equivalent control device under 326 Indiana Administrative Code 8–3–5 (a)(5)(C).

(i) *Incorporation by reference.* (A) Commissioner's Order #2004–04 as issued by the Indiana Department of Environmental Management on December 22, 2004.

(170) The Indiana Department of Environmental Management submitted revisions to Indiana's State Implementation plan on February 18, 2005, February 21, 2005, and April 8, 2005. Revisions to 326 IAC 1–2–52, 326 IAC 1–2–82.5, and 326 IAC 1–3–4 amend the definition of ''particulate matter'' to include the definition of $PM_{2.5}$ and amends the section that specifies the national ambient air quality standards. Revisions to 326 IAC 1–1–3 and 326 IAC 1–1–6 update the references to the Code of Federal Regulations (CFR) from the 2000 edition to the 2002 edition and add ''credible evidence provisions'' into state rules consistent with federal requirements, respectively.

(i) Incorporation by reference. The following sections of the Indiana Administrative Code are incorporated by reference.

(A) Indiana Administrative Code Title 326: Air Pollution Control Board, Article 1: General Provisions, Rule 2: Definitions, Section 52: ''''Particulate matter'''' defined,'' Section 52.2:

''$PM_{2.5}$' defined,'' Section 52.4:''PM_{10}' defined,'' Section 82.5: ''Total suspended particulate' or 'TSP' defined.'' Indiana Administrative Code Title 326: Air Pollution Control Board, Article 1: General Provisions, Rule 3: Ambient Air Quality Standards, Section 4: ''Ambient air quality standards.'' Filed with the Secretary of State on December 20, 2004 and effective on January 19, 2005. Published at Indiana Register, Volume 28, Number 5, February 1, 2005 (28 IR 1471–1473).

(B) Indiana Administrative Code Title 326: Air Pollution Control Board, Article 1: General Provisions, Rule 1: Provisions Applicable Throughout Title 326, Section 3: ''References to the Code of Federal Regulations.'' Filed with the Secretary of State on August 26, 2004 and effective on September 25, 2004. Published at Indiana Register, Volume 28, Number 1, October 1, 2004 (28 IR 17).

(C) Indiana Administrative Code Title 326: Air Pollution Control Board, Article 1: General Provisions, Rule 1: Provisions Applicable Throughout Title 326, Section 6: ''Credible evidence.'' Filed with the Secretary of State on February 14, 2005 and effective on March 16, 2005. Published at Indiana Register, Volume 28, Number 7, April 1, 2005 (28 IR 2045).

(171) On April 8, 2005, Indiana submitted final adopted revisions for the Dearborn County sulfur dioxide emission limitations in 326 IAC 7–4–13 as a requested revision to the Indiana state implementation plan. EPA is approving these revisions, which remove obsolete rule language for Indiana Michigan Tanners Creek Station and update information for other companies listed in the rule.

(i) Incorporation by reference. (A) Indiana Administrative Code Title 326: Air Pollution Control Board, Article 7: Sulfur Dioxide Rules, Rule 4: Emission Limitations and Requirements by County, Section 13: Dearborn County Sulfur Dioxide Emission Limitations. Filed with the Secretary of State on February 14, 2005, and effective March 16, 2005. Published in the Indiana Register on April 1, 2005 (28 IR 2021).

(172) On April 8, 2005, and as supplemented on July 6, 2005, Indiana submitted a State Implementation Plan (SIP) revision for the control of sulfur dioxide (SO_2) emissions in Lake County, Indiana. The SIP revision submitted by the Indiana Department of Environmental Management (IDEM) amends 326 Indiana Administrative Code (IAC) Article 7. Indiana's revised SO_2 rule consists of changes to 326 IAC 7–4 which sets forth facility-specific SO_2 emission limitations and recordkeeping requirements for Lake County. The rule revision also reflects updates to company names, updates to emission limits currently in permits, deletion of facilities that are already covered by natural gas limits, and other corrections and updates. Due to changes in section numbers, references to citations in other parts of the rule have also been updated.

(i) *Incorporation by reference.* (A) Amendments to Indiana Administrative Code Title 326: Air Pollution Control Board, Article 7 SULFUR DIOXIDE RULES, Rule 1.1 Sulfur Dioxide Emission Limitations, sections 326 IAC 7–1.1–1, ''Applicability'', 326 IAC 7–1.1–2 ''Sulfur Dioxide Emission Limitations'', and 326 IAC 7–2–1 ''Reporting Requirements: Methods to Determine Compliance''; newly created 326 IAC 7–4.1, ''Lake County Sulfur Dioxide Emission Limitations'', adopted by the Indiana Air Pollution Control Board on March 2, 2005. Filed with the Secretary of State May 25, 2005, effective June 24, 2005.

(173) The Indiana Department of Environmental Management submitted amendments to Indiana's State Implementation Plan on September 1, 2005. The amendments include the repeal of 326 IAC 6–1, which is replaced with new articles 326 IAC 6.5, ''Particulate Matter Limitations for all Counties Except Lake County'' and 326 IAC 6.8, ''Particulate Matter Limitations for Lake County.''

(i) Incorporation by reference. The following sections of the Indiana Administrative Code are incorporated by reference.

(A) Amendments to Indiana Administrative Code Title 326: Air Pollution Control Board, Article 6.5 Particulate Matter Limitations Except Lake County, and Article 6.8 Particulate Matter Limitations For Lake County. Adopted by the Indiana Air Pollution Control

Board on May 4, 2005. Filed with the Secretary of State on August 10, 2005 and effective on September 9, 2005. Published at Indiana Register, Volume 28, Number 12, September 1, 2005 (3454).

(174) [Reserved]

(175) On December 15, 2005, Indiana submitted revised particulate matter (PM_{10}) regulations for ASF Keystone, Inc. in Lake County. The emission limit for the small coil manufacturing unit is increased while the limits for the medium and large coil manufacturing units are decreased. The result of these revisions is a net decrease in PM_{10} emission limits. The emission limits for miscellaneous coil manufacturing are removed because the unit no longer operates. EPA also removed the process weight rate emission limits for the four units.

(i) Incorporation by reference.

(A) Indiana Administrative Code Title 326: Air Pollution Control Board, Article 6.8: Particulate Matter Limitations for Lake County, Rule 2: Lake County: PM_{10} Emission Requirements, Section 4: ASF Keystone, Inc.-Hammond. Filed with the Secretary of State on October 20, 2005 and effective November 19, 2005. Published in 29 *Indiana Register* 794 on December 1, 2005.

(176) On December 21, 2005, Indiana submitted revised regulations to the EPA. As a result, the compounds, 1,1,1,2,2,3,3-heptafluoro-3-methoxy-propane, 3-ethoxy-1,1,1,2,3,4,4,5,5,6,6,6-dodecafluoro-2-(trifluoromethyl)hexane, 1,1,1,2,3,3,3-heptafluoropropane, and methyl formate, are added to the list of ''nonphotochemically reactive hydrocarbons'' or ''negligibly photochemically reactive compounds'' in 326 IAC 1–2–48 and these compounds are deleted from the list of VOCs in 326 IAC 1–2–90. Companies producing or using the four compounds will no longer need to follow the VOC rules for these compounds. The requirements in 326 IAC 1–2–48 and 1–2–90 were also modified for the compound t-butyl acetate. It is not considered a VOC for emission limits and content requirements. T-butyl acetate will still be considered a VOC for the record-keeping, emissions reporting, and inventory requirements.

(i) Incorporation by reference.

(A) Indiana Administrative Code Title 326: Air Pollution Control Board, Article 1: General Provisions, Rule 2: Definitions, Section 48: '''Nonphotochemically reactive hydrocarbon' or 'negligibly photochemically reactive compounds' defined'', and Section 90: '' 'Volatile organic compound' or 'VOC' defined''. Filed with the Secretary of State on October 20, 2005 and effective November 19, 2005. Published in 29 *Indiana Register* 795–797 on December 1, 2005.(177) The Indiana Department of Environmental Management submitted revisions to Indiana's State Implementation plan on December 21, 2005, and June 27, 2006. Revisions to 326 IAC 1–3–4 provide consistency between State (326 IAC 1–3–4) and Federal (40 CFR 50.3) reference conditions for measurements of particulate matter air quality; and amendments to 326 IAC 1–1–3 update the references to the Code of Federal Regulations (CFR) from the 2002 edition to the 2004 edition.

(i) Incorporation by reference. The following sections of the Indiana Administrative Code are incorporated by reference.

(A) Indiana Administrative Code Title 326: Air Pollution Control Board, Article 1: General Provisions, Rule 1: Provisions Applicable Throughout Title 326, Section 3: References to the Code of Federal Regulations. Filed with the Secretary of State on October 14, 2005 and effective on November 13, 2005. Published at Indiana Register, Volume 29, Number 3, December 1, 2005 (29 IR 795).

(B) Indiana Administrative Code Title 326: Air Pollution Control Board, Article 1: General Provisions, Rule 3: Ambient Air Quality Standards, Section 4: Ambient Air Quality Standards. Filed with the Secretary of State on March 6, 2006 and effective on April 5, 2006. Published at Indiana Register, Volume 29, Number 7, April 1, 2006 (29 IR 2179).

(178) On August 25, 2006, Indiana submitted final adopted revisions to its emission reporting requirement rules as a revision to the Indiana State Implementation Plan.

(i) *Incorporation by reference*. Indiana Administrative Code Title 326: Air Pollution Control Board, Article 2: Permit

Review Rules, Rule 6 Emission Reporting, Section 1: Applicability, Section 3: Compliance schedule, and Section 4: Requirements. Approved by the Attorney General June 29, 2006. Approved by the Governor July 13, 2006. Filed with the Publisher July 14, 2006. Published on the Indiana Register Web site August 9, 2006, Document Identification Number (DIN):20060809–IR–326050078FRA. Effective August 13, 2006.

(179) On July 17, 2006, Indiana submitted final adopted revisions, which add 326 IAC 8–1–6 (3)(B) and (C), to its VOC rules for new facilities in 326 IAC 8–1–6 as a requested revision to the Indiana state implementation plan. EPA is approving these revisions, which exempt boat manufacturers subject to NESHAPS for boat manufacturing, or reinforced plastics composites manufacturers subject to NESHAPS for reinforced composites production facilities, from the requirement to do a best available control technology analysis provided they comply with the applicable NESHAPS.

(i) Incorporation by reference.

(A) Indiana Administrative Code Title 326: Air Pollution Control Board, Article 8: Volatile Organic Compound Rules, Rule 1: General Provisions, Section 6: New facilities; general reduction requirements. Final adopted by the Air Pollution Control Board on March 1, 2006. Filed with the Secretary of State on May 25, 2006, and became effective June 23, 2006. Published in the Indiana Register on July 1, 2006 (29 IR 3350).

(180) On November 1, 2005, and supplemented on March 20, 2007, the State of Indiana submitted a source specific revision to its state implementation plan for control of particulate matter in Title 326 of the Indiana Administrative Code (IAC), Rule 6.5–7, Section 13, which contains particulate matter emission limits for Holy Cross Services Corporation, to reflect current operating conditions of the boilers at St. Mary's College, located in Notre Dame, Indiana. The revision in 326 IAC 6.5–7–13 also changes the source name from St. Mary's to Holy Cross Services Corporation (Saint Mary's Campus).

(i) Incorporation by reference. Indiana Administrative Code Title 326: Air Pollution Control Board, Article 6.5: PM Limitations Except Lake County, Rule 7: St. Joseph County, Section 13: Holy Cross Services Corporation (Saint Mary's Campus). Approved by the Attorney General January 18, 2007. Approved by the Governor January 23, 2007. Filed with the Publisher January 26, 2007. Published on the Indiana Register Web site February 14, 2007, Document Identification Number (DIN):20070214–IR–326060121FRA. Effective February 25, 2007.

(181) On September 2, 2004, Indiana submitted modifications to its Prevention of Significant Deterioration and nonattainment New Source Review rules as a revision to the state implementation plan. On October 25, 2005, and January 17, 2007, Indiana submitted revisions to the September 2, 2004 submittal.

(i) Incorporation by reference.

(A) Title 326 of the Indiana Administrative Code, Rules 2–1.1–7, 2–2–1(a) through (l), 2–2–1(n) through (kk), 2–2–1(mm) through (tt), 2–2–1(uu)(1) through (4), 2–2–1(vv) through (aaa), 2–2–2(a) through (d)(4), 2–2–2(d)(6) through (e), 2–2–2(g) through (i), 2–2–3, 2–2–4, 2–2–5(a), 2–2–5(c) through (e), 2–2–6, 2–2–8, 2–2.4, 2–3–1(a) through (i), 2–3–1(k) through (ff), 2–3–1(hh) through (uu), 2–3–2(a) through (c)(4), 2–3–2(c)(6) through (k), 2–3–2(m), 2–3–3(a) through (b)(11), 2–3–3(b)(14), 2–3.4, 2–5.1–4. Filed with the Secretary of State on August 10, 2004, effective September 10, 2004. Published in the Indiana Register on September 1, 2004 (27 IR 3887).

(182) On March 30, 2007, Indiana submitted final adopted revisions, which amend 326 IAC 8–5–1, concerning rule applicability, and add 326 IAC 8–5–6, fuel grade ethanol production at dry mills, to its VOC rules as a requested revision to the Indiana state implementation plan. By letter of December 19, 2007, Indiana stated that it would be acceptable to measure the concentration limits in 326 IAC 8–5–6 using EPA Method 25(a) expressed as equivalent ethanol with the calibration gas being a mixture of ethanol in air. EPA is approving these revisions, authorizing Indiana to establish an industry-specific State BACT standard for fuel grade ethanol production at dry mill facilities that emit 25 tons or more of VOC per year.

(i) *Incorporation by reference.* The following sections of the Indiana Administrative Code (IAC) are incorporated by reference. 326 IAC 8–5–1, ''Applicability of Rule'', and 326 IAC 8–5–6 ''Fuel Grade Ethanol Production at Dry Mills''. Approved by the Attorney General February 16, 2007. Approved by the Governor February 16, 2007. Filed with the Publisher February 20, 2007. Published on the Indiana Register Web site March 21, 2007, Document Identification Number (DIN):20070321-IR–326050197FRA. Effective March 22, 2007.

(ii) *Additional materials.* A December 19, 2007, letter from Daniel Murray, Assistant Commissioner of the Indiana Department of Environmental management, Office of Air Quality, which states that it would be acceptable to measure the concentration limits in 326 IAC 8–5–6 using EPA Method 25(a) expressed as equivalent ethanol with the calibration gas being a mixture of ethanol in air.

(183) On February 7, 2002, Indiana submitted revisions to its State Implementation Plan (SIP) for lead (Pb) as part of the State's incorporation of a Federal standard for secondary lead smelters. On October 3, 2006, and November 27, 2007, Indiana supplemented its request as it pertained to Quemetco, Incorporated, in Marion County. This revision removes from the Indiana SIP the source-specific provisions for Quemetco found in article 326 IAC 15, previously approved in paragraph (c)(95) of this section, and replaces them with the corresponding provisions of article 326 IAC 20–13.

(i) *Incorporation by reference.* The following sections of Title 326 of the Indiana Administrative Code (IAC) are incorporated by reference:

(A) 326 IAC 15–1–2(c) ''Source-specific provisions'' and 326 IAC 15–1–3 ''Control of fugitive lead dust''. Filed with the Secretary of State on December 1, 2000, effective December 30, 2000. Published in the Indiana Register on January 1, 2001 (24 IR 954).

(B) 326 IAC 20–13–1(c) ''Applicability; incorporation by reference of federal standards'', 326 IAC 20–13–2(a) ''Emission limitations lead standards for Quemetco, Incorporated'', and 326 IAC 20–13–6 ''Compliance testing''. Filed with the Secretary of State on December 1, 2000, effective December 30, 2000. Published in the Indiana Register on January 1, 2001 (24 IR 958).

(184) Indiana Department of Environmental Management submitted amendments to the State Implementation Plan to control nitrogen oxide emissions from internal combustion engines in 326 Indiana Administrative Code (IAC) 10–5 and corrections to 326 IAC 10–3–3 and 326 IAC 10–4 on March 8, 2006.

(i) *Incorporation by reference.* The following sections of the Indiana Administrative Code (IAC) are incorporated by reference.

(A) Title 326: Air Pollution Control Board, Article 10: Nitrogen Oxides Rules, Rule 3: Nitrogen Oxide Reduction Program for Specific Source Categories, Section 3: Emissions limits. Filed with the Secretary of State on January 27, 2006, effective February 26, 2006. Published in the Indiana Register on March 1, 2006 (29 IR 1876).

(B) Title 326: Air Pollution Control Board, Article 10: Nitrogen Oxides Rules, Rule 4: Nitrogen Oxides Budget Trading Program, Section 1: Applicability, Section 2: Definitions, Section 3: Retired unit exemption, Section 9: NO_X allowance allocations, Section 13: Individual opt-ins, Section 14: NO_X allowance banking, and Section 15: Compliance supplement pool. Filed with the Secretary of State on January 27, 2006, effective February 26, 2006. Published in the Indiana Register on March 1, 2006 (29 IR 1877).

(C) Title 326: Air Pollution Control Board, Article 10: Nitrogen Oxides Rules, Rule 5: Nitrogen Oxide Reduction Program for Internal Combustion Engines (ICE). Filed with the Secretary of State on January 27, 2006, effective February 26, 2006. Published in the Indiana Register on March 1, 2006 (29 IR 1899).

(185) The Indiana Department of Environmental Management submitted amendments on September 20, 2007 to the State Implementation Plan to Control Emissions from electric generating units (EGU) and non-EGUs. Rules affecting these units include: 326 Indiana Administrative Code (IAC) 24–1–2, 326 IAC 24–1–8, 326 IAC 24–1–12, 326 IAC 24–2–11, 326 IAC 24–3–1, 326 IAC 24–3–2, 326 IAC 24–3–8 and 326 IAC 24–3–12 respectively.

(i) Incorporation by reference. The following sections of the Indiana Administrative Code (IAC) are incorporated by reference: 326 IAC 24–1–2(36) ''Control period''; 326 IAC 24–1–2(38) ''Energy efficiency or renewable energy projects''; 326 IAC 24–1–2(60) ''Rated energy efficiency''; 326 IAC 24–1–8 ''CAIR NO_X allowance allocations''; 326 IAC 24–1–12 ''CAIR NO_X opt-in units''; 326 IAC 24–2–11 ''CAIR SO_2 opt-in units''; 326 IAC 24–3–1 ''Applicability''; 326 IAC 24–3–2(38) ''Energy efficiency or renewable energy projects''; 326 IAC 24–3–2(49) ''Large affected unit''; 326 IAC 24–3–2(61) ''Rated energy efficiency''; 326 IAC 24–3–8 ''CAIR NO_X ozone season allowance''; and 326 IAC 24–3–12 ''CAIR NO_X ozone season opt-in units''. Approved by the Attorney General January 12, 2007. Approved by the Governor January 23, 2007. Filed with the Publisher January 26, 2007. Published on the Indiana Register Web site February 28, 2007, Document Identification Number (DIN): 20070221–IR–326050117FRA. Effective February 25, 2007.

(186) The Indiana Department of Environmental Management submitted revisions to Indiana's State Implementation plan on July 20, 2007, as revised on December 19, 2007, to amend 326 IAC 1–1–3, ''References to the Code of Federal Regulations''; 326 IAC 1–2–48, ''nonphotochemically reactive hydrocarbons'' or ''negligibly photochemically reactive compounds'' defined; and 326 IAC 1–2–90, ''volatile organic compound'' or ''VOC'' defined. The revision to 326 IAC 1–1–3 updates the references to CFR from the 2005 edition to the 2006 edition. In 326 IAC 1–2–48, and 326 IAC 1–2–90, the SIP revision deletes references to outdated FEDERAL REGISTER citations.

(i) *Incorporation by reference*. The following sections of the Indiana Administrative Code (IAC) are incorporated by reference.

(A) 326 IAC 1–1–3, ''References to the Code of Federal Regulations''. Filed with the Secretary of State on April 26, 2007, and effective on May 26, 2007. Published in the Indiana Register, on May 23, 2007 (DIN: 20070523–IR–326060412FRA).

(B) 326 IAC 1–2–48, ''nonphotochemically reactive hydrocarbons'' or ''negligibly photochemically reactive compounds'' defined; and 326 IAC 1–2–90, ''volatile organic compound'' or ''VOC'' defined. Filed with the Secretary of State on April 26, 2007, and effective on May 26, 2007. Published in the Indiana Register, on May 23, 2007 (DIN: 20070523–IR–326060412FRA).

(ii) *Additional Materials*. A December 19, 2007, letter from Daniel Murray, Assistant Commissioner of the Indiana Department of Environmental Management, Office of Air Quality, which limits the July 20, 2007, SIP revision request to the following definitions: 326 IAC 1–1–3, ''References to the CFR''; 326 IAC 1–2–48, ''nonphotochemically reactive hydrocarbons'' or ''negligibly photochemically reactive compounds'' defined; and 326 IAC 1–2–90, ''volatile organic compound'' or ''VOC'' defined.

(187) On February 21, 2008, Indiana submitted revisions to its particulate matter SIP. On March 27, 2008, Indiana submitted a corrected copy of its rules. The submittal revises 326 IAC 6.5: Particulate Matter Limitations Except Lake County and 326 IAC 6.8: Particulate Matter Limitations for Lake County. This SIP revision updates facility names, revises formatting, removes sources no longer in operation, and revises some emission limits.

(i) *Incorporation by reference*. The following sections of Title 326 of the Indiana Administrative Code (IAC) are incorporated by reference:

(A) Indiana Administrative Code Title 326: Air Pollution Control Board, Article 6.5: Particulate Matter Limitations Except Lake County, Rule 1, General Provisions, sections 326 IAC 6.5–1–1 through 326 IAC 6.5–1–7, filed August 10, 2005, effective on September 9, 2005 and previously incorporated by reference (see paragraph (c)(173)(i)(A) of this section).

(B) Indiana Administrative Code Title 326: Air Pollution Control Board, Article 6.5: Particulate Matter Limitations Except Lake County, Rule 2, Clark County, sections 326 IAC 6.5–2–1 through 326 IAC 6.5–2–12, filed January 23, 2008, effective on February 22, 2008 (326 IAC 6.5–2–8 Kimball Office-Borden, filed January 23, 2008, effective on February 22, 2008, errata filed on February 29, 2008).

(C) Indiana Administrative Code Title 326: Air Pollution Control Board, Article 6.5: Particulate Matter Limitations Except Lake County, Rule 3, Dearborn County, sections 326 IAC 6.5–3–1 through 326 IAC 6.5–3–9, filed January 23, 2008, effective on February 22, 2008.

(D) Indiana Administrative Code Title 326: Air Pollution Control Board, Article 6.5: Particulate Matter Limitations Except Lake County, Rule 4, Dubois County, sections 326 IAC 6.5–4–1 through 326 IAC 6.5–4–24, filed January 23, 2008, effective on February 22, 2008.

(E) Indiana Administrative Code Title 326: Air Pollution Control Board, Article 6.5: Particulate Matter Limitations Except Lake County, Rule 5, Howard County, sections 326 IAC 6.5–5–1 through 326 IAC 6.5–5–16, filed January 23, 2008, effective on February 22, 2008.

(F) Indiana Administrative Code Title 326: Air Pollution Control Board, Article 6.5: Particulate Matter Limitations Except Lake County, Rule 6, Marion County, sections 326 IAC 6.5–6–1 through 326 IAC 6.5–6–36, filed January 23, 2008, effective on February 22, 2008 (326 IAC 6.5–6–18, Cargill, Inc., filed January 23, 2008, effective on February 22, 2008, errata filed on January 31, 2008).

(G) Indiana Administrative Code Title 326: Air Pollution Control Board, Article 6.5: Particulate Matter Limitations Except Lake County, Rule 7, St. Joseph County, sections 326 IAC 6.5–7–1 through 326 IAC 6.5–7–20, filed January 23, 2008, effective on February 22, 2008 (326 IAC 6.5–7–14 Accucast Technology, LLC, filed January 23, 2008, effective on February 22, 2008, errata filed on February 5, 2008).

(H) Indiana Administrative Code Title 326: Air Pollution Control Board, Article 6.5: Particulate Matter Limitations Except Lake County, Rule 8, Vanderburgh County, sections 326 IAC 6.5–8–1 through 326 IAC 6.5–8–15, filed January 23, 2008, effective on February 22, 2008.

(I) Indiana Administrative Code Title 326: Air Pollution Control Board, Article 6.5: Particulate Matter Limitations Except Lake County, Rule 9, Vigo County, sections 326 IAC 6.5–9–1 through 326 IAC 6.5–9–20, filed January 23, 2008, effective on February 22, 2008.

(J) Indiana Administrative Code Title 326: Air Pollution Control Board, Article 6.5: Particulate Matter Limitations Except Lake County, Rule 10, Wayne County, sections 326 IAC 6.5–10–1 through 326 IAC 6.5–10–19, filed January 23, 2008, effective on February 22, 2008.

(K) Indiana Administrative Code Title 326: Air Pollution Control Board, Article 6.8: Particulate Matter Limitations For Lake County, Rule 1, General Provisions, sections 326 IAC 6.8–1–1, Applicability, 6.8–1–5, Control strategies, and 6.8–1–7, Scope, filed January 23, 2008, effective on February 22, 2008; and Indiana Administrative Code Title 326: Air Pollution Control Board, Article 6.8: Particulate Matter Limitations For Lake County, Rule 1, General Provisions, sections 326 IAC 6.8–1–1.5, Definitions, 6.8–1–2, Particulate emission limitations; fuel combustion steam generators, asphalt concrete plant, grain elevators, foundries, mineral aggregate operations; modification by commission, 6.8–1–3, Compliance Determination, 6.8–1–4, Compliance schedules, and 6.8–6–6, State implementation plan revisions, filed August 10, 2005, effective on September 9, 2005 and previously incorporated by reference (see paragraph (c)(173)(i)(A) of this section).

(L) Indiana Administrative Code Title 326: Air Pollution Control Board, Article 6.8: Particulate Matter Limitations for Lake County, Rule 2, Lake County: PM10 Emission Requirements, sections 326 IAC 6.8–2–1 through 326 IAC 6.8–2–38, filed January 23, 2008, effective on February 22, 2008 (326 IAC 6.8–2–6 BP Products North America, Inc.-Whiting Refinery, filed January 23, 2008, effective on February 22, 2008, errata filed on February 29, 2008).

(M) Indiana Administrative Code Title 326: Air Pollution Control Board, Article 6.8: Particulate Matter Limitations for Lake County, Rule 3, Lake County: Opacity Limits; Exceptions to 326 IAC 5–1–2, sections 326 IAC 6.8–3–1 through 326 IAC 6.8–3–4, filed January 23, 2008, effective on February 22, 2008.

(N) Indiana Administrative Code Title 326: Air Pollution Control Board, Article 6.8: Particulate Matter Limitations for Lake County, Rule 4, Lake

County: Opacity Limits; Test Methods, filed January 23, 2008, effective on February 22, 2008.

(O) Indiana Administrative Code Title 326: Air Pollution Control Board, Article 6.8: Particulate Matter Limitations for Lake County, Rule 5, Lake County: Opacity Continuous Emissions Monitors, Installation and operation of continuous emissions monitors (Repealed), filed January 23, 2008, effective on February 22, 2008.

(P) Indiana Administrative Code Title 326: Air Pollution Control Board, Article 6.8: Particulate Matter Limitations for Lake County, Rule 6, Lake County: Combustion Sources; Natural Gas, sections 326 IAC 6.8–6–1 through 326 IAC 6.8–6–20), filed January 23, 2008, effective on February 22, 2008.

(Q) Indiana Administrative Code Title 326: Air Pollution Control Board, Article 6.8: Particulate Matter Limitations for Lake County, Rule 7, Lake County: Site-Specific Control Requirements, sections 326 IAC 6.8–7–1 through 326 IAC 6.8–7–8, filed January 23, 2008, effective on February 22, 2008.

(R) Indiana Administrative Code Title 326: Air Pollution Control Board, Article 6.8: Particulate Matter Limitations for Lake County, Rule 8, Lake County: Continuous Compliance Plan, section 326 IAC 6.8–8–1 Applicability, filed January 23, 2008, effective on February 22, 2008; and Indiana Administrative Code Title 326: Air Pollution Control Board, Article 6.8: Particulate Matter Limitations for Lake County, Rule 8, Lake County: Continuous Compliance Plan, sections 326 IAC 6.8–8–2 Documentation; operation and maintenance procedures, 326 IAC 6.8–8–3 Plan requirements, 326 IAC 6.8–8–4 Plan; schedule for complying with 326 IAC 6.8–7, 326 IAC 6.8–8–5 Plan; source categories, 326 IAC 6.8–8–6 Plan; particulate matter control equipment; operation and maintenance, 326 IAC 6.8–8–7 Plan; particulate matter control equipment; recording; operation; inspection, 326 IAC 6.8–8–8 Plan; department review, filed August 10, 2005, effective on September 9, 2005 and previously incorporated by reference (see paragraph (c)(173)(i)(A) of this section).

(S) Indiana Administrative Code Title 326: Air Pollution Control Board, Article 6.8: Particulate Matter Limitations for Lake County, Rule 9, Lake County: PM10 Coke Battery Emission Requirements, section 326 IAC 6.8–9–3 Emission limitations, filed January 23, 2008, effective on February 22, 2008; and Indiana Administrative Code Title 326: Air Pollution Control Board, Article 6.8: Particulate Matter Limitations for Lake County, Rule 9, Lake County: PM10 Coke Battery Emission Requirements, sections 326 IAC 6.8–9–1 Applicability, and 326 IAC 6.8–9–2 Definitions, filed August 10, 2005, effective on September 9, 2005 and previously incorporated by reference (see paragraph (c)(173)(i)(A) of this section).

(T) Indiana Administrative Code Title 326: Air Pollution Control Board, Article 6.8: Particulate Matter Limitations for Lake County, Rule 10, Lake County: Fugitive Particulate Matter, section 326 IAC 6.8–10–1 Applicability, filed January 23, 2008, effective on February 22, 2008; and Indiana Administrative Code Title 326: Air Pollution Control Board, Article 6.8: Particulate Matter Limitations for Lake County, Rule 10, Lake County: Fugitive Particulate Matter, sections 326 IAC 6.8–10–2 Definitions, 326 IAC 6.8–10–3 Particulate matter emission limitations, and 326 IAC 6.8–10–4 Compliance requirements; control plans, filed August 10, 2005, effective on September 9, 2005 and previously incorporated by reference (see paragraph (c)(173)(i)(A) of this section).

(U) Indiana Administrative Code Title 326: Air Pollution Control Board, Article 6.8: Particulate Matter Limitations for Lake County, Rule 11, Lake County: Particulate Matter Contingency Measures, sections 326 IAC 6.8–11–1 through 326 IAC 6.8–11–6, filed August 10, 2005, effective on September 9, 2005 and previously incorporated by reference (see paragraph (c)(173)(i)(A) of this section).

(ii) *Additional material.*

(A) Certificate of Authenticity, Indiana Administrative Code, (As Updated Through March 26, 2008), signed by John M. Ross, Executive Director, Legislative Services Agency.

(188) The Indiana Department of Environmental Management submitted a revision to Indiana's State Implementation plan on May 22, 2008, to amend 326 IAC 1–1–3, ''References to the Code

of Federal Regulations''. The revision to 326 IAC 1–1–3 updates the references to CFR from the 2006 edition to the 2007 edition.

(i) *Incorporation by reference.* Title 326 of the Indiana Administrative Code (IAC), section 1–1–3, ''References to the Code of Federal Regulations'' is incorporated by reference. The rule was filed with the Publisher of the Indiana Register on April 1, 2008, and became effective on May 1, 2008. Published in the Indiana Register, on April 30, 2008 (DIN: 20080430–IR–32607037FRA).

(189) On December 19, 2007, Indiana submitted modifications to its Federally Enforceable State Operating Permits rules as a revision to the state implementation plan. The revision extends the maximum permit term for renewals of Federally Enforceable State Operating Permits from five years to ten years. EPA has determined that this revision is approvable under the Clean Air Act.

(i) Incorporation by reference.

(A) Indiana Administrative Code Title 326, Article 2: Permit Review Rules, sections 2–1.1–9.5, ''General provisions; term of permit'', and 2–8–4, ''Permit content'', are incorporated by reference. Filed with the Publisher of the Indiana Register on November 16, 2007, and became effective on December 16, 2007. Published in the Indiana Register on December 13, 2007 (20071212–IR–326060487FRA).

(190) On September 11, 2008, Indiana submitted a revision to its SIP. The revisions add particulate matter, sulfur dioxide, and nitrogen oxides control and emission limitations on the Southern Indiana Gas and Electric Company's F.B. Culley Generating Station, a power plant located in Warrick County, Indiana.

(i) Incorporation by reference.

(A) Indiana Administrative Code Title 326: Air Pollution Control Board, Article 6: Particulate Rules, Rule 7: Particulate Matter Emission Limitations for Southern Indiana Gas and Electric Company, Section 1: ''Southern Indiana Gas and Electric Company (SIGECO)''; Article 7: Sulfur Dioxide Rules, Rule 4: Emission Limitations and Requirements by County, Section 10: ''Warrick County sulfur dioxide emission limitations''; and Article 10: Nitrogen Oxides Rules, Rule 6: Nitrogen Oxides Emission Limitations for Southern Indiana Gas and Electric Company, Section 1: ''Southern Indiana Gas and Electric Company (SIGECO)''.

Filed with the Secretary of State on July 31, 2008 and effective on August 30, 2008. Published in Indiana Register 326070309 on August 28, 2008, LSA Document #07–309(F).

(191) The Indiana Department of Environmental Management submitted a revision to Indiana's State Implementation plan on September 25, 2009, to amend 326 IAC 1–1–3, ''References to the Code of Federal Regulations''. The revision to 326 IAC 1–1–3 updates the references to CFR from the 2007 edition to the 2008 edition.

(i) *Incorporation by reference.* Title 326 of the Indiana Administrative Code (IAC), section 1–1–3, ''References to the Code of Federal Regulations'' is incorporated by reference. The rule was filed with the Publisher of the Indiana Register on July 1, 2009, and became effective on July 31, 2009. Published in the Indiana Register, on July 29, 2009 (DIN: 20090729–IR–326080901FRA).

(192) On April 25, 2008, Indiana submitted regulations that incorporate its continuous emission monitoring requirements into its SIP. Indiana also submitted Commissioner's Orders that provide an alternative monitoring plan for a Warrick County source. The alternative monitoring requirements allow the use of a particulate matter continuous emissions monitoring system in place of a continuous opacity monitor.

(i) *Incorporation by reference.* (A) Indiana Administrative Code Title 326: Air Pollution Control Board, Article 3: Monitoring Requirements, Rule 5: Continuous Monitoring of Emissions, Section 1: Applicability; monitoring requirements for applicable pollutants. Filed with the Secretary of State on January 30, 1998, and effective on March 1, 1998. Published in 21 *Indiana Register* 2062–2079 on March 1, 1998. (B) Commissioner's Order #2008–01 as issued by the Indiana Department of Environmental Management on February 11, 2008.

(193) On December 10, 2009, the Indiana Department of Environmental

Management submitted several volatile organic compound rules for approval into the Indiana State Implementation Plan for the Lake and Porter County portion of the Chicago-Gary-Lake County, IL–IN, 8-hour ozone nonattainment area. This includes both revisions to existing rules and also new rules. Also submitted were subsequent technical corrections to typographical, clerical, or spelling errors for some of these rules.

(i) Incorporation by reference.

(A) Indiana Administrative Code Title 326: Air Pollution Control Board, Article 8: Volatile Organic Compound Rules, Rule 1: General provisions, Section 0.5: Definitions, Section 2: Compliance Methods, and Section 4: Testing procedures, filed with the Publisher of the Indiana Register on November 3, 2009, and became effective on December 3, 2009. Published in the Indiana Register on December 2, 2009 (DIN: 20091202–IR–326090220FRA).

(B) Indiana Administrative Code Title 326: Air Pollution Control Board, Article 8: Volatile Organic Compound Rules, Rule 2: Surface Coating Emission Limitations, Section 1: Applicability, Section 2: Automobile and light duty truck coating regulations, Section 5: Paper coating operations, Section 6: Metal furniture coating operations, Section 7: Large appliance coating operations, Section 9: Miscellaneous metal and plastic parts coating operations, and Section 10: Flat wood panels; manufacturing operations, filed with the Publisher of the Indiana Register on November 3, 2009, and became effective on December 3, 2009. Published in the Indiana Register on December 2, 2009 (DIN: 20091202–IR–326090220FRA).

(C) Indiana Administrative Code Title 326: Air Pollution Control Board, Article 8: Volatile Organic Compound Rules, Rule 5: Miscellaneous Operations, Section 5: Graphic arts operations, filed with the Publisher of the Indiana Register on November 3, 2009, and became effective on December 3, 2009. Published in the Indiana Register on December 2, 2009 (DIN: 20091202–IR–326090220FRA).

(D) Indiana Administrative Code Title 326: Air Pollution Control Board, Article 8: Volatile Organic Compound Rules, Rule 16: Offset Lithographic Printing and Letterpress Printing, filed with the Publisher of the Indiana Register on November 3, 2009, and became effective on December 3, 2009. Published in the Indiana Register on December 2, 2009 (DIN: 20091202–IR–326090221FRA).

(E) Indiana Administrative Code Title 326: Air Pollution Control Board, Article 8: Volatile Organic Compound Rules, Rule 17: Industrial Solvent Cleaning Operations, filed with the Publisher of the Indiana Register on November 3, 2009, and became effective on December 3, 2009. Published in the Indiana Register on December 2, 2009 (DIN: 20091202–IR–326090221FRA).

(F) Indiana Administrative Code Title 326: Air Pollution Control Board, Article 8: Volatile Organic Compound Rules, Rule 18: Synthetic Organic Chemical Manufacturing Industry Air Oxidation, Distillation, and Reactor Processes, filed with the Publisher of the Indiana Register on November 3, 2009, and became effective on December 3, 2009. Published in the Indiana Register on December 2, 2009 (DIN: 20091202–IR–326090222FRA).

(G) Indiana Administrative Code Title 326: Air Pollution Control Board, Article 8: Volatile Organic Compound Rules, Rule 19: Control of Volatile Organic Compound Emissions from Process Vents in Batch Operations, filed with the Publisher of the Indiana Register on November 3, 2009, and became effective on December 3, 2009. Published in the Indiana Register on December 2, 2009 (DIN: 20091202–IR–326090222FRA).

(H) Indiana Administrative Code Title 326: Air Pollution Control Board, Article 8: Volatile Organic Compound Rules, Rule 20: Industrial Wastewater, filed with the Publisher of the Indiana Register on November 3, 2009, and became effective on December 3, 2009. Published in the Indiana Register on December 2, 2009 (DIN: 20091202–IR–326090222FRA).

(I) Indiana Administrative Code Title 326: Air Pollution Control Board, Article 8: Volatile Organic Compound Rules, Rule 21: Aerospace Manufacturing and Rework Operations, filed with the Publisher of the Indiana Register on November 3, 2009, and became

effective on December 3, 2009. Published in the Indiana Register on December 2, 2009 (DIN: 20091202–IR–326090222FRA).

(J) Indiana Administrative Code Title 326: Air Pollution Control Board, Article 8: Volatile Organic Compound Rules, Rule 22: Miscellaneous Industrial Adhesives, filed with the Publisher of the Indiana Register on November 3, 2009, and became effective on December 3, 2009. Published in the Indiana Register on December 2, 2009 (DIN: 20091202–IR–326090221FRA).

(K) Corrections to Indiana Administrative Code Title 326: Air Pollution Control Board, Article 8: Volatile Organic Compound Rules, Rule 1: General provisions, Section 2: Compliance Methods and Section 4: Testing procedures, filed with the Publisher of the Indiana Register on November 18, 2009, and became effective on January 2, 2010. Published in the Indiana Register on December 16, 2009 (DIN: 20091216–IR–326090220ACA).

(L) Corrections to Indiana Administrative Code Title 326: Air Pollution Control Board, Article 8: Volatile Organic Compound Rules, Rule 2: Surface Coating Emission Limitations, Section 2: Automobile and light duty truck coating operations, filed with the Publisher of the Indiana Register on November 18, 2009, and became effective on January 2, 2010. Published in the Indiana Register on December 16, 2009 (DIN: 20091216–IR–326090220ACA).

(M) Corrections to Indiana Administrative Code Title 326: Air Pollution Control Board, Article 8: Volatile Organic Compound Rules, Rule 16: Offset Lithographic Printing and Letterpress Printing, filed with the Publisher of the Indiana Register on November 18, 2009, and became effective on January 2, 2010. Published in the Indiana Register on December 16, 2009 (DIN: 20091216–IR–326090221ACA).

(N) Corrections to Indiana Administrative Code Title 326: Air Pollution Control Board, Article 8: Volatile Organic Compound Rules, Rule 17: Industrial Solvent Cleaning Operations, filed with the Publisher of the Indiana Register on November 18, 2009, and became effective on January 2, 2010. Published in the Indiana Register on December 16, 2009 (DIN: 20091216–IR–326090221ACA).

(O) Corrections to Indiana Administrative Code Title 326: Air Pollution Control Board, Article 8: Volatile Organic Compound Rules, Rule 18: Synthetic Organic Chemical Manufacturing Industry Air Oxidation, Distillation, and Reactor Processes, filed with the Publisher of the Indiana Register on November 19, 2009, and became effective on January 3, 2010. Published in the Indiana Register on December 16, 2009 (DIN: 20091216–IR–326090222ACA).

(P) Corrections to Indiana Administrative Code Title 326: Air Pollution Control Board, Article 8: Volatile Organic Compound Rules, Rule 19: Control of Volatile Organic Compound Emissions from Process Vents in Batch Operations, filed with the Publisher of the Indiana Register on November 19, 2009, and became effective on January 3, 2010. Published in the Indiana Register on December 16, 2009 (DIN: 20091216–IR–326090222ACA).

(Q) Corrections to Indiana Administrative Code Title 326: Air Pollution Control Board, Article 8: Volatile Organic Compound Rules, Rule 20: Industrial Wastewater, filed with the Publisher of the Indiana Register on November 19, 2009, and became effective on January 3, 2010. Published in the Indiana Register on December 16, 2009 (DIN: 20091216–IR–326090222ACA).

(R) Corrections to Indiana Administrative Code Title 326: Air Pollution Control Board, Article 8: Volatile Organic Compound Rules, Rule 21: Aerospace Manufacturing and Rework Operations, filed with the Publisher of the Indiana Register on November 19, 2009, and became effective on January 3, 2009. Published in the Indiana Register on December 16, 2009 (DIN: 20091216–IR–326090222ACA).

(S) Corrections to Indiana Administrative Code Title 326: Air Pollution Control Board, Article 8: Volatile Organic Compound Rules, Rule 22: Miscellaneous Industrial Adhesives, filed with the Publisher of the Indiana Register on November 18, 2009, and became effective on January 2, 2010. Published in the Indiana Register on December 16, 2009 (DIN: 20091216–IR–326090221ACA).

(194) On December 31, 2008, Indiana submitted a Commissioner's Order that provided an alternative monitoring plan for Indianapolis Power and Light—Harding Street Generating Station in Marion County that is being incorporated into its SIP. The alternative monitoring requirements allow the use of a particulate matter continuous emissions monitoring system in place of a continuous opacity monitor.

(i) *Incorporation by reference.* Commissioner's Order #2008–02 for Indianapolis Power and Light as issued by the Indiana Department of Environmental Management on October 31, 2008.

(195) On June 5, 2009, the Indiana Department of Environmental Management submitted amendments to Indiana's automobile refinishing rule for approval into its state implementation plan (SIP). These rule revisions extend the applicability of Indiana's approved volatile organic compound (VOC) automobile refinishing rules to all persons in Indiana who sell or manufacture automobile refinishing coatings or who refinish motor vehicles.

(i) Incorporation by reference.

(A) Indiana Administrative Code Title 326: Air Pollution Control Board, Article 8: Volatile Organic Compound Rules, Rule 10: Automobile Refinishing, filed with the Publisher of the Indiana Register on March 27, 2009, and became effective on April 26, 2009. Published in the Indiana Register on April 22, 2009 (DIN: 20090422–IR–326060603FRA).

[37 FR 10863, May 31, 1972]

EDITORIAL NOTE: For FEDERAL REGISTER citations affecting § 52.800, see the List of CFR Sections Affected, which appears in the Finding Aids section of the printed volume and at *www.fdsys.gov*.

(c) *EPA-approved regulations.*

Subpart Q—Iowa

§ 52.820 Identification of plan.

(a) *Purpose and scope.* This section sets forth the applicable SIP for Iowa under section 110 of the CAA, 42 U.S.C. 7401, and 40 CFR part 51 to meet NAAQS.

(b) *Incorporation by reference.* (1) Material listed in paragraphs (c) and (d) of this section with an EPA approval date prior to December 31, 2014, was approved for incorporation by reference by the Director of the FEDERAL REGISTER in accordance with 5 U.S.C. 552(a) and 1 CFR part 51. Material is incorporated as it exists on the date of the approval, and notice of any change in the material will be published in the FEDERAL REGISTER. Entries in paragraphs (c) and (d) of this section with EPA approval dates after December 31, 2014, will be incorporated by reference in the next update to the SIP compilation.

(2) EPA Region 7 certifies that the rules/regulations provided by EPA in the SIP compilation at the addresses in paragraph (b)(3) of this section are an exact duplicate of the officially promulgated state rules/regulations which have been approved as part of the SIP as of December 31, 2014.

(3) Copies of the materials incorporated by reference may be inspected at the Environmental Protection Agency, Region 7, Air Planning and Development Branch, 11201 Renner Boulevard, Lenexa, Kansas 66219; and the National Archives and Records Administration (NARA). If you wish to obtain material from the EPA Regional Office, please call (913) 551–7089. For information on the availability of this material at NARA, call (202) 741–6030, or go to: *www.archives.gov/federal-register/cfr/ibr-locations.html*.

EPA-APPROVED IOWA REGULATIONS

Iowa citation	Title	State effective date	EPA approval date	Explanation
Iowa Department of Natural Resources Environmental Protection Commission [567]				
Chapter 20—Scope of Title—Definitions—Forms—Rule of Practice				
567–20.1 ...	Scope of Title	12/16/2015	9/9/2016, 81 FR 62387	This rule is a non-substantive description of the Chapters contained in the Iowa rules. EPA has not approved all of the Chapters to which this rule refers.
567–20.2 ...	Definitions	4/22/2015	6/17/2016; 81 FR 39585	The definitions for ''anaerobic lagoon,'' ''odor,'' ''odorous substance,'' ''odorous substance source'' are not SIP approved.
567–20.3 ...	Air Quality Forms Generally	4/22/2015	8/10/2015, 80 FR 33192.	
Chapter 21—Compliance				
567–21.1 ...	Compliance Schedule	5/7/2008	6/17/2016 and 81 FR 39585.	
567–21.2 ...	Variances	4/4/2007	10/16/2007, 72 FR 58535.	
567–21.3 ...	Emission Reduction Program	3/14/1990	6/29/1990, 55 FR 26690.	
567–21.4 ...	Circumvention of Rules	3/14/1990	6/29/1990, 55 FR 26690.	
567–21.5 ...	Evidence Used in Establishing That a Violation Has or Is Occurring.	11/16/1994	10/30/1995, 60 FR 55198.	
567–21.6 ...	Temporary Electricity Generation for Disaster Situations.	10/15/2008	12/29/2009, 74 FR 68692.	
Chapter 22—Controlling Pollution				
567–22.1 ...	Permits Required for New or Existing Stationary Sources.	12/16/2015	9/9/2016, 81 FR 62387	None.
567–22.2 ...	Processing Permit Applications	4/22/2015	8/10/2015, 80 FR 33192.	
567–22.3 ...	Issuing Permits	4/22/2015	6/11/2015; 80 FR 33192	Subrule 22.3(6) has not been approved as part of the SIP. Subrule 22.3(6), Limits on Hazardous Air Pollutants, has been approved under Title V and section 112(l). The remainder of the rule has not been approved pursuant to Title V and section 112(l).
567–22.4 ...	Special Requirements for Major Stationary Sources Located in Areas Designated Attainment or Unclassified (PSD).	12/16/2015	9/9/2016, 81 FR 62387	None.
567–22.5 ...	Special Requirements for Nonattainment Areas.	12/16/2015	9/9/2016, 81 FR 62387	None.
567–22.8 ...	Permit by Rule	12/16/2015	9/9/2016, 81 FR 62387	None.
567–22.9 ...	Special Requirements for Visibility Protection.	11/11/2009	10/25/2013, 78 FR 63887.	
567–22.10	Permitting Requirements for Country Grain Elevators, Country Grain Terminal Elevators, Grain Terminal Elevators and Feed Mill Equipment.	12/16/2015	9/9/2016, 81 FR 62387	None.

EPA-APPROVED IOWA REGULATIONS—Continued

Iowa citation	Title	State effective date	EPA approval date	Explanation
567–22.105	Title V Permit Applications	11/11/2009	10/25/2013, 78 FR 63887	Only subparagraph (2)i(5) is approved as part of the SIP. In 22.105(1) *Duty to apply* the last sentence ''Alternatively, an owner or operator may submit a complete and timely application through the electronic submittal format specified by the department.'' is not approved. In 22.105(1) ''a'' new subparagraph (9) is not approved.
567–22.200	Definitions for Voluntary Operating Permits.	10/18/1995	4/30/1996, 61 FR 18958.	
567–22.201	Eligibility for Voluntary Operating Permits.	4/4/2007	10/16/2007, 72 FR 58535.	
567–22.202	Requirement to Have a Title V Permit.	4/9/1997	6/25/1998, 63 FR 34600.	
567–22.203	Voluntary Operating Permit Applications.	11/11/2009	10/25/2013, 78 FR 63887.	
567–22.204	Voluntary Operating Permit Fees	12/14/1994	4/30/1996, 61 FR 18958.	
567–22.205	Voluntary Operating Permit Processing Procedures.	12/14/1994	4/30/1996, 61 FR 18958.	
567–22.206	Permit Content	10/18/1995	4/30/1996, 61 FR 18958.	
567–22.207	Relation to Construction Permits	10/15/2008	12/29/2009, 74 FR 68692.	
567–22.208	Suspension, Termination, and Revocation of Voluntary Operating Permits.	12/14/1994	4/30/1996, 61 FR 18958.	
567–22.209	Change of Ownership for Facilities with Voluntary Operating Permits.	11/11/2009	10/25/2013, 78 FR 63887.	
567–22.300	Operating permit by rule for small sources.	11/11/2009	10/25/2013, 78 FR 63887.	
	Chapter 23—Emission Standards for Contaminants			
567–23.1	Emission Standards	11/24/2010	10/25/2013, 78 FR 63887	Sections 23.1(2)–(5) are not approved in the SIP. Section 23.1 (5) is approved as part of the 111(d) plan.
567–23.2	Open Burning	1/14/2004	11/3/2004, 69 FR 63945	Subrule 23.2(3)g(2) was not submitted for approval. Variances from open burning rule 23.2(2) are subject to EPA approval.
567–23.3	Specific Contaminants	6/11/2008	12/29/2009, 74 FR 68692	Subrule 23.3(3) ''(d)'' is not SIP approved.
567–23.4	Specific Processes	6/11/2008	12/29/2009, 74 FR 68692	Subrule 23.4(10) is not SIP approved.
	Chapter 24—Excess Emissions			
567–24.1	Excess Emission Reporting	11/24/2010	10/25/2013, 78 FR 63887.	
567–24.2	Maintenance and Repair Requirements.	3/14/1990	6/29/1990, 55 FR 26690.	
	Chapter 25—Measurement of Emissions			
567–25.1	Testing and Sampling of New and Existing Equipment.	10/24/2012	1/16/2014, 79 FR 2787.	

EPA-APPROVED IOWA REGULATIONS—Continued

Iowa citation	Title	State effective date	EPA approval date	Explanation
Chapter 26—Prevention of Air Pollution Emergency Episodes				
567–26.1 ...	General	3/14/1990	6/29/1990, 55 FR 26690.	
567–26.2 ...	Episode Criteria	3/14/1990	6/29/1990, 55 FR 26690.	
567–26.3 ...	Preplanned Abatement Strategies	3/14/1990	6/29/1990, 55 FR 26690.	
567–26.4 ...	Actions During Episodes	3/14/1990	6/29/1990, 55 FR 26690.	
Chapter 27—Certificate of Acceptance				
567–27.1 ...	General	3/14/1990	6/29/1990, 55 FR 26690.	
567–27.2 ...	Certificate of Acceptance	3/14/1990	6/29/1990, 55 FR 26690.	
567–27.3 ...	Ordinance or Regulations	3/14/1990	6/29/1990, 55 FR 26690.	
567–27.4 ...	Administrative Organization	3/14/1990	6/29/1990, 55 FR 26690.	
567–27.5 ...	Program Activities	3/14/1990	6/29/1990, 55 FR 26690.	
Chapter 28—Ambient Air Quality Standards				
567–28.1 ...	Statewide Standards	10/23/2013	5/14/2014, 79 FR 27490.	
Chapter 29—Qualification in Visual Determination of the Opacity of Emissions				
567–29.1 ...	Methodology and Qualified Observer	5/13/1998	5/22/2000, 65 FR 32030.	
Chapter 31—Nonattainment Areas				
567–31.1 ...	Permit Requirements Relating to Nonattainment Areas.	12/16/2015	9/9/2016, 81 FR 62387	None.
567–31.2 ...	Conformity of General Federal Actions to the Iowa SIP or Federal Implementation Plan.	1/15/2014	5/15/2014, 79 FR 27763.	
567–31.3 ...	Nonattainment new source review requirements for areas designated nonattainment on or after May 18, 1998.	1/15/2014	5/15/2014, 79 FR 27763.	
567–31.4 ...	Preconstruction review permit program.	1/15/2014	5/15/2014, 79 FR 27763.	
567–31.9 ...	Actual PALs	1/15/2014	5/15/2014, 79 FR 27763.	
567–31.10	Validity of Rules	1/15/2014	5/15/2014, 79 FR 27763.	
567–31.20	Special requirements for nonattainment areas designated before May 18, 1998 (originally adopted in 567–22.5(455B)).	4/22/2015	8/10/2015, 80 FR 33192.	
Chapter 33—Special Regulations and Construction Permit Requirements for Major Stationary Sources—Prevention of Significant Deterioration (PSD) of Air Quality				
567–33.1 ...	Purpose	12/16/2015	9/9/2016, 81 FR 62387	None.
567–33.3 ...	Special Construction Permit Requirements for Major Stationary Sources in Areas Designated Attainment or Unclassified (PSD).	7/17/2013	6/17/2016, 81 FR 39585.	
567–33.9 ...	Plantwide Applicability Limitations	7/17/2013	6/17/2016, 81 FR 39585	
567–33.10	Exceptions to adoption by reference	11/1/2006	5/14/2007, 72 FR 27056.	
Chapter 34—Provisions for Air Quality Emissions Trading Programs				
567–34.1 ...	Purpose	7/12/2006	8/6/2007, 72 FR 43539.	
567–34.201	CAIR NO_X annual trading program provisions.	11/28/2007	4/15/2008, 73 FR 20177.	
567–34.202	CAIR designated representative for CAIR NO_X sources.	7/12/2006	8/6/2007, 72 FR 43539.	
567–34.203	Permits	7/12/2006	8/6/2007, 72 FR 43539.	
567–34.205	CAIR NO_X allowance allocations	7/12/2006	8/6/2007, 72 FR 43539.	
567–34.206	CAIR NO_X allowance tracking system.	7/12/2006	8/6/2007, 72 FR 43539.	
567–34.207	CAIR NO_X allowance transfers	7/12/2006	8/6/2007, 72 FR 43539.	
567–34.208	Monitoring and reporting	7/12/2006	8/6/2007, 72 FR 43539.	
567–34.209	CAIR NO_X opt-in units	7/12/2006	8/6/2007, 72 FR 43539.	
567–34.210	CAIR SO_2 trading program	11/28/2007	4/15/2008, 73 FR 20177.	
567–34.220	CAIR NO_X ozone season trading program.	7/12/2006	8/6/2007, 72 FR 43539.	

EPA-APPROVED IOWA REGULATIONS—Continued

Iowa citation	Title	State effective date	EPA approval date	Explanation
567–34.221	CAIR NO_X ozone season trading program general.	11/28/2007	4/15/2008, 73 FR 20177.	
567–34.222	CAIR designated representative for CAIR NO_X ozone season sources.	7/12/2006	8/6/2007, 72 FR 43539.	
567–34.223	CAIR NO_X ozone season permits	7/12/2006	8/6/2007, 72 FR 43539.	
567–34.225	CAIR NO_X ozone season allowance allocations.	7/12/2006	8/6/2007, 72 FR 43539.	
567–34.226	CAIR NO_X ozone season allowance tracking system.	7/12/2006	8/6/2007, 72 FR 43539.	
567–34.227	CAIR NO_X ozone season allowance transfers.	7/12/2006	8/6/2007, 72 FR 43539.	
567–34.228	CAIR NO_X ozone season monitoring and reporting.	7/12/2006	8/6/2007, 72 FR 43539.	
567–34.229	CAIR NO_X ozone season opt-in units.	7/12/2006	8/6/2007, 72 FR 43539.	

EPA-APPROVED IOWA REGULATIONS—Continued

Iowa citation	Title	State effective date	EPA approval date	Explanation
		Linn County		
Chapter 10	Linn County Air Quality Ordinance, Chapter 10.	1/30/2015	7/28/2015, 80 FR 44870	The following definitions are not SIP-approved in Chapter 10.2; Anaerobic lagoon, Biomass, Chemical processing plants (ethanol production facilities that produce ethanol by natural fermentation included in NAICS code 325193 or 312140 are not included in this definition); Federally Enforceable; Greenhouse gases; Maximum Achievable Control Technology (MACT); MACT floor. The following sections are not SIP approved: 10.4(1), Title V Permits; 10.5(9)''b'' Locally Required Permits; Exemptions from the Authorization to Install Permit to Operate Requirements; 10.5(9) ''ll'', Exemption for production painting, adhesive or coating units; 10.8(2)''b'' Emissions From Fuel-Burning Equipment; Emission Limitation; 10.8(3) Emissions From Fuel-Burning Equipment; Exemptions for Residential Heaters Burning Solid Fuels; 10.8(4) Emissions from Fuel-Burning Equipment; Nuisance Conditions for Fuel Burning Equipment; 10.9(2), NSPS; 10.9(3), Emission Standards for HAPs; 10.9(4), Emission Standards for HAPs for Source Categories; 10.10(4) Variance from rules; 10.11, Emission of Objectionable Odors; 10.15, Variances, 10.17(13) Continuous Emissions Monitoring from Acid Rain Program, and 10.24, Penalty.

EPA-APPROVED IOWA REGULATIONS—Continued

Iowa citation	Title	State effective date	EPA approval date	Explanation
		Polk County		
Chapter V ..	Polk County Board of Health Rules and Regulations Air Pollution Chapter V.	10/12/2015	7/11/2016, 81 FR 44795	Article I, Section 5–2, definition of ''variance,'' ''anaerobic lagoon,'' and ''greenhouse gases''; Article III, Incineration and Open Burning, Section 5–7(d) Variance Application; Article VI, Sections 5–16(n), (o) and (p); Article VIII; Article IX, Sections 5–27(3) and (4); Article X, Section 5–28, subsections (a) through (c), and Article X, Section 5–35(b)(5); Article XIII; and Article XVI, Section 5–75 are not part of the SIP. Article VI, Section 5–17, adopted by Polk County on 7/26/2011, is not part of the SIP, and the previously approved version of Article VI, Section 5–17 remains part of the SIP.

(d) *EPA-approved State source-specific permits.*

EPA-APPROVED IOWA SOURCE-SPECIFIC ORDERS/PERMITS

Name of source	Order/Permit No.	State effective date	EPA Approval date	Explanation
(1) Archer-Daniels Midland Company.	90–AQ–10	3/25/1991	11/1/1991, 56 FR 56158.	
(2) Interstate Power Company	89–AQ–04	2/21/1990	11/1/1991, 56 FR 56158.	
(3) Grain Processing Corporation	74–A–015–S	9/18/1995	12/1/1997, 62 FR 63454.	
(4) Grain Processing Corporation	79–A–194–S	9/18/1995	12/1/1997, 62 FR 63454.	
(5) Grain Processing Corporation	79–A–195–S	9/18/1995	12/1/1997, 62 FR 63454.	
(6) Grain Processing Corporation	95–A–374	9/18/1995	12/1/1997, 62 FR 63454.	
(7) Muscatine Power and Water ...	74–A–175–S	9/14/1995	12/1/1997, 62 FR 63454.	
(8) Muscatine Power and Water ...	95–A–373	9/14/1995	12/1/1997, 62 FR 63454.	
(9) Monsanto Corporation	76–A–161S3	7/18/1996	12/1/1997, 62 FR 63454.	
(10) Monsanto Corporation	76–A–265S3	7/18/1996	12/1/1997, 62 FR 63454.	
(11) IES Utilities, Inc	97–AQ–20	11/20/1998	3/11/1999, 64 FR 12087	SO_2 Control Plan for Cedar Rapids.
(12) Archer-Daniels-Midland Corporation.	SO_2 Emission Control Plan.	9/14/1998	3/11/1999, 64 FR 12087	ADM Corn Processing SO_2 Control Plan for Cedar Rapids.
(13) Linwood Mining and Minerals Corporation.	98–AQ–07	3/13/1998	3/18/1999, 64 FR 13343	PM_{10} control plan for Buffalo.
(14) Lafarge Corporation	98–AQ–08	3/13/1998	3/18/1999, 64 FR 13343	PM_{10} control plan for Buffalo.

EPA-APPROVED IOWA SOURCE-SPECIFIC ORDERS/PERMITS—Continued

Name of source	Order/Permit No.	State effective date	EPA Approval date	Explanation
(15) Holnam, Inc	A.C.O. 1999–AQ–31	9/2/1999	11/6/2002, 67 FR 67563	For a list of the 47 permits issued for individual emission points see IDNR letters to Holnam, Inc., dated 7/24/01.
(16) Holnam, Inc	Consent Amendment to A.C.O. 1999–AQ–31.	5/16/2001	11/6/2002, 67 FR 67563	For a list of the 47 permits issued for individual emission points see IDNR letters to Holnam, Inc., dated 7/24/01.
(17) Holnam, Inc	Permits for 17–01–009, Project Nos. 99–511 and 00–468..	7/24/2001	11/6/2002, 67 FR 67563	For a list of the 47 permits issued for individual emission points see IDNR letters to Holnam, Inc., dated 7/24/01.
(18) Lehigh Portland Cement Company.	A.C.O. 1999–AQ–32	9/2/1999	11/6/2002, 67 FR 67563	For a list of the 41 permits issued for individual emission points see IDNR letters to Lehigh dated 7/24/01 and 2/18/02.
(19) Lehigh Portland Cement Company.	Permits for plant No. 17–01–005, Project Nos. 99–631 and 02–037.	2/18/2002	11/6/2002, 67 FR 67563	For a list of the 41 permits issued for individual emission points see IDNR letters to Lehigh dated 7/24/01 and 2/18/02.
(20) Blackhawk Foundry and Machine Company.	A.C.O. 03–AQ–51	12/4/2003	6/10/2004, 69 FR 32454	Together with the permits listed below this order comprises the PM_{10} control strategy for Davenport, Iowa.
(21) Blackhawk Foundry and Machine Company.	Permit No. 02–A–116 (Cold Box Core Machine).	8/19/2002	6/10/2004, 69 FR 32454	Provisions of the permit that relate to pollutants other than PM_{10} are not approved by EPA as part of this SIP.
(22) Blackhawk Foundry and Machine Company.	Permit No. 02–A–290(Wheelabrator #2 and Casting Sorting).	8/19/2002	6/10/2004, 69 FR 32454	Provisions of the permit that relate to pollutants other than PM_{10} are not approved by EPA as part of this SIP.
(23) Blackhawk Foundry and Machine Company.	Permit No. 02–A–291 (Mold Sand Silo).	8/19/2002	6/10/2004, 69 FR 32454	Provisions of the permit that relate to pollutants other than PM_{10} are not approved by EPA as part of this SIP.

EPA-APPROVED IOWA SOURCE-SPECIFIC ORDERS/PERMITS—Continued

Name of source	Order/Permit No.	State effective date	EPA Approval date	Explanation
(24) Blackhawk Foundry and Machine Company.	Permit No. 02–A–292 (Bond Storage).	8/19/2002	6/10/2004, 69 FR 32454	Provisions of the permit that relate to pollutants other than PM_{10} are not approved by EPA as part of this SIP.
(25) Blackhawk Foundry and Machine Company.	Permit No. 02–A–293 (Induction Furnace and Aluminum Sweat Furnace).	8/19/2002	6/10/2004, 69 FR 32454	Provisions of the permit that relate to pollutants other than PM_{10} are not approved by EPA as part of this SIP.
(26) Blackhawk Foundry and Machine Company.	Permit No. 77–A–114–S1 (Wheelabrator #1 & Grinding).	8/19/2002	6/10/2004, 69 FR 32454	Provisions of the permit that relate to pollutants other than PM_{10} are not approved by EPA as part of this SIP.
(27) Blackhawk Foundry and Machine Company.	Permit No. 84–A–055–S1 (Cupola ladle, Pour deck ladle, Sand shakeout, Muller, Return sand #1, Sand cooler, Sand screen, and Return sand #2).	8/19/2002	6/10/2004, 69 FR 32454	Provisions of the permit that relate to pollutants other than PM_{10} are not approved by EPA as part of this SIP.
(28) Blackhawk Foundry and Machine Company.	Permit No. 72–A–060–S5 (Cupola).	8/19/2002	6/10/2004, 69 FR 32454	Provisions of the permit that relate to pollutants other than PM_{10} are not approved by EPA as part of this SIP.
(29) Grain Processing Corporation	Administrative Consent Order NO.2014–AQ–A1.	2/14/2014	12/1/2014, 79 FR 71025	The last sentence of Paragraph 5, Section III and Section VI are not approved by EPA as part of the SIP.
(30) Muscatine Power and Water	Permit No. 74–A–175–S3	7/22/2013	12/1/2014, 79 FR 71025.	
(31) Muscatine Power and Water	Permit No. 80–A–006–S3	7/22/2013	12/1/2014, 79 FR 71025.	
(32) Muscatine Power and Water	Permit No. 80–A–007–S3	7/22/2013	12/1/2014, 79 FR 71025.	
(33) Muscatine Power and Water	Permit No. 80–A–191–P2	7/22/2013	12/1/2014, 79 FR 71025.	
(34) Muscatine Power and Water	Permit No. 80–A–193–S3	7/22/2013	12/1/2014, 79 FR 71025.	
(35) Muscatine Power and Water	Permit No. 80–A–194–S3	7/22/2013	12/1/2014, 79 FR 71025.	
(36) Muscatine Power and Water	Permit No. 80–A–197–S2	7/22/2013	12/1/2014, 79 FR 71025.	
(37) Muscatine Power and Water	Permit No. 80–A–200–S1	7/22/2013	12/1/2014, 79 FR 71025.	
(38) Muscatine Power and Water	Permit No. 80–A–201–S1	7/22/2013	12/1/2014, 79 FR 71025.	
(39) Muscatine Power and Water	Permit No. 80–A–202–S2	7/22/2013	12/1/2014, 79 FR 71025.	
(40) Muscatine Power and Water	Permit No. 93–A–283–S2	7/22/2013	12/1/2014, 79 FR 71025.	
(41) Muscatine Power and Water	Permit No. 93–A–288–S3	7/22/2013	12/1/2014, 79 FR 71025.	
(42) Muscatine Power and Water	Permit No. 93–A–289–S3	7/22/2013	12/1/2014, 79 FR 71025.	
(43) Muscatine Power and Water	Permit No. 93–A–290–S3	7/22/2013	12/1/2014, 79 FR 71025.	
(44) Muscatine Power and Water	Permit No. 93–A–373–P2	7/22/2013	12/1/2014, 79 FR 71025.	
(45) Muscatine Power and Water	Permit No. 00–A–638–S3	7/22/2013	12/1/2014, 79 FR 71025.	
(46) Muscatine Power and Water	Permit No. 00–A–639–S1	7/22/2013	12/1/2014, 79 FR 71025.	
(47) Muscatine Power and Water	Permit No. 00–A–689–S1	7/22/2013	12/1/2014, 79 FR 71025.	
(48) Muscatine Power and Water	Permit No. 00–A–684–S1	7/22/2013	12/1/2014, 79 FR 71025.	
(49) Muscatine Power and Water	Permit No. 00–A–686–S1	7/22/2013	12/1/2014, 79 FR 71025.	
(50) Muscatine Power and Water	Permit No. 00–A–687–S1	7/22/2013	12/1/2014, 79 FR 71025.	
(51) Muscatine Power and Water	Permit No. 01–A–193–S2	7/22/2013	12/1/2014, 79 FR 71025.	
(52) Muscatine Power and Water	Permit No. 01–A–218–S1	7/22/2013	12/1/2014, 79 FR 71025.	
(53) Muscatine Power and Water	Permit No. 01–A–456–S1	7/22/2013	12/1/2014, 79 FR 71025.	
(54) Muscatine Power and Water	Permit No. 01–A–617–S1	7/22/2013	12/1/2014, 79 FR 71025.	
(55) Muscatine Power and Water	Permit No. 04–A–618–S1	7/22/2013	12/1/2014, 79 FR 71025.	
(56) Muscatine Power and Water	Permit No. 04–A–619–S1	7/22/2013	12/1/2014, 79 FR 71025.	
(57) Muscatine Power and Water	Permit No. 11–A–562–S1	7/22/2013	12/1/2014, 79 FR 71025.	
(58) Muscatine Power and Water	Permit No. 13–A–139	7/23/2013	12/1/2014, 79 FR 71025.	

EPA-APPROVED IOWA SOURCE-SPECIFIC ORDERS/PERMITS—Continued

Name of source	Order/Permit No.	State effective date	EPA Approval date	Explanation
(59) Muscatine Power and Water	Permit No. 13–A–140	7/23/2013	12/1/2014, 79 FR 71025.	
(60) Muscatine Power and Water	Permit No. 13–A–141	7/23/2013	12/1/2014, 79 FR 71025.	
(61) Muscatine Power and Water	Permit No. 13–A–142	7/22/2013	12/1/2014, 79 FR 71025.	
(62) Muscatine Power and Water	Permit No. 13–A–143	7/22/2013	12/1/2014, 79 FR 71025.	
(63) Muscatine Power and Water	Permit No. 13–A–146	7/22/2013	12/1/2014, 79 FR 71025.	
(64) Muscatine Power and Water	Permit No. 13–A–147	7/22/2013	12/1/2014, 79 FR 71025.	
(65) Muscatine Power and Water	Permit No. 13–A–148	7/22/2013	12/1/2014, 79 FR 71025.	
(66) Muscatine Power and Water	Permit No. 13–A–150	7/22/2013	12/1/2014, 79 FR 71025.	
(67) Muscatine Power and Water	Permit No. 13–A–151	7/22/2013	12/1/2014, 79 FR 71025.	
(68) Muscatine Power and Water	Permit No. 13–A–152	7/22/2013	12/1/2014, 79 FR 71025.	
(69) Muscatine Power and Water	Permit No. 13–A–153	7/22/2013	12/1/2014, 79 FR 71025.	
(70) Muscatine Power and Water	Permit No. 13–A–154	7/22/2013	12/1/2014, 79 FR 71025.	
(71) Muscatine Power and Water	Permit No. 13–A–155	7/22/2013	12/1/2014, 79 FR 71025.	
(72) Muscatine Power and Water	Permit No. 13–A–157	7/22/2013	12/1/2014, 79 FR 71025.	
(73) Muscatine Power and Water	Permit No. 13–A–158	7/22/2013	12/1/2014, 79 FR 71025.	
(74) Muscatine Power and Water	Permit No. 13–A–159	7/22/2013	12/1/2014, 79 FR 71025.	
(75) Muscatine Power and Water	Permit No. 13–A–161	7/22/2013	12/1/2014, 79 FR 71025.	
(76) Muscatine Power and Water	Permit No. 80–A–196–S3	7/22/2013	12/1/2014, 79 FR 71025.	
(77) Muscatine Power and Water	Permit No. 93–A–286–S4	7/22/2013	12/1/2014, 79 FR 71025.	
(78) Muscatine Power and Water	Permit No. 01–A–457–S4	7/22/2013	12/1/2014, 79 FR 71025.	
(79) Muscatine Power and Water	Permit No. 06–A–650–S2	7/22/2013	12/1/2014, 79 FR 71025.	
(80) Muscatine Power and Water	Permit No. 13–A–160	7/22/2013	12/1/2014, 79 FR 71025.	
(81) Union Tank Car Company	Permit No. 93–A–251–S5	4/8/2013	12/1/2014, 79 FR 71025.	
(82) Union Tank Car Company	Permit No. 93–A–252–S5	4/8/2013	12/1/2014, 79 FR 71025.	
(83) Union Tank Car Company	Permit No. 93–A–253–S5	4/8/2013	12/1/2014, 79 FR 71025.	
(84) Union Tank Car Company	Permit No. 93–A–254–S3	4/8/2013	12/1/2014, 79 FR 71025.	
(85) Union Tank Car Company	Permit No. 00–A–1086–S2.	4/8/2013	12/1/2014, 79 FR 71025.	
(86) Union Tank Car Company	Permit No. 00–A–1087–S2.	4/8/2013	12/1/2014, 79 FR 71025.	
(87) Union Tank Car Company	Permit No. 00–A–1088–S2.	4/8/2013	12/1/2014, 79 FR 71025.	
(88) Union Tank Car Company	Permit No. 93–A–255–S7	4/8/2013	12/1/2014, 79 FR 71025.	
(89) Union Tank Car Company	Permit No. 96–A–629–S3	4/8/2013	12/1/2014, 79 FR 71025.	
(90) Union Tank Car Company	Permit No. 96–A–630–S5	4/8/2013	12/1/2014, 79 FR 71025.	
(91) Union Tank Car Company	Permit No. 96–A–631–S3	4/8/2013	12/1/2014, 79 FR 71025.	
(92) Union Tank Car Company	Permit No. 96–A–636–S3	4/8/2013	12/1/2014, 79 FR 71025.	
(93) Union Tank Car Company	Permit No. 00–A–529–S2	4/8/2013	12/1/2014, 79 FR 71025.	
(94) Union Tank Car Company	Permit No. 00–A–530–S2	4/8/2013	12/1/2014, 79 FR 71025.	
(95) Union Tank Car Company	Permit No. 00–A–531–S2	4/8/2013	12/1/2014, 79 FR 71025.	
(96) Union Tank Car Company	Permit No. 00–A–532–S2	4/8/2013	12/1/2014, 79 FR 71025.	
(97) Union Tank Car Company	Permit No. 00–A–533–S2	4/8/2013	12/1/2014, 79 FR 71025.	
(98) Union Tank Car Company	Permit No. 93–A–256–S6	4/8/2013	12/1/2014, 79 FR 71025.	
(99) Union Tank Car Company	Permit No. 96–A–632–S5	4/8/2013	12/1/2014, 79 FR 71025.	
(100) Union Tank Car Company ..	Permit No. 96–A–633–S5	4/8/2013	12/1/2014, 79 FR 71025.	
(101) Union Tank Car Company ..	Permit No. 96–A–634–S5	4/8/2013	12/1/2014, 79 FR 71025.	
(102) Union Tank Car Company ..	Permit No. 96–A–635–S5	4/8/2013	12/1/2014, 79 FR 71025.	
(103) Union Tank Car Company ..	Permit No. 00–A–1089–S2.	4/8/2013	12/1/2014, 79 FR 71025.	
(104) Union Tank Car Company ..	Permit No. 00–A–1090–S2.	4/8/2013	12/1/2014, 79 FR 71025.	
(105) Union Tank Car Company ..	Permit No. 00–A–1091–S2.	4/8/2013	12/1/2014, 79 FR 71025.	
(106) Union Tank Car Company ..	Permit No. 10–A–043–S2	4/8/2013	12/1/2014, 79 FR 71025.	
(107) Union Tank Car Company ..	Permit No. 09–A–009–S2	4/8/2013	12/1/2014, 79 FR 71025.	
(108) Union Tank Car Company ..	Permit No. 09–A–010–S2	4/8/2013	12/1/2014, 79 FR 71025.	
(109) Union Tank Car Company ..	Permit No. 94–A–434–S2	4/8/2013	12/1/2014, 79 FR 71025	
(110) Griffin Pipe Products Co., LLC.	Administrative Consent Order No. 2015–AQ–02.	1/29/2015	2/26/2016, 81 FR 9770.	
(111) Alter Metal Recycling	Permit No. 14–A–521	9/2/2014	2/26/2016, 81 FR 9770.	

(e) *The EPA approved nonregulatory provisions and quasi-regulatory measures.*

EPA-APPROVED IOWA NONREGULATORY PROVISIONS

Name of nonregulatory SIP provision	Applicable geographic or nonattainment area	State submittal date	EPA Approval date	Explanation
(1) Air Pollution Control Implementation Plan.	Statewide	1/27/1972	5/31/1972, 37 FR 10842.	
(2) Request for a Two Year Extension to Meet the NAAQS.	Council Bluffs	1/27/1972	5/31/1972, 37 FR 10842	Correction notice published 3/2/1976.
(3) Revisions to Appendices D and G.	Statewide	2/2/1972	5/31/1972, 37 FR 10842	Correction notice published 3/2/1976.
(4) Source Surveillance and Record Maintenance Statements.	Statewide	4/14/1972	3/2/1976, 41 FR 8956	[FRL 484–4].
(5) Statement Regarding Public Availability of Emissions Data.	Statewide	5/2/1972	3/2/1976, 41 FR 8956	[FRL 484–4].
(7) Letter Describing the Certificates of Acceptance for Local Air Pollution Control Programs.	Linn County, Polk County.	12/14/1972	10/1/1976, 41 FR 43406	[FRL 616–1].
(8) High Air Pollution Episode Contingency Plan.	Statewide	6/20/1973	10/1/1976, 41 FR 43406	[FRL 616–1].
(9) Summary of Public Hearing on Revised Rules Which Were Submitted on July 17, 1975.	Statewide	9/3/1975	10/1/1976, 41 FR 43406	[FRL 616–1].
(10) Air Quality Modeling to Support Sulfur Dioxide Emission Standards.	Statewide	3/4/1977	6/1/1977, 42 FR 27892	[FRL 739–1].
(11) Nonattainment Plans	Mason City, Davenport, Cedar Rapids, Des Moines.	6/22/1979	3/6/1980, 45 FR 14561	[FRL 1427–5].
(12) Information on VOC Sources to Support the Nonattainment Plan.	Linn County	10/8/1979	3/6/1980, 45 FR 14561	[FRL 1427–5].
(13) Information and Commitments Pertaining to Legally Enforceable RACT Rules to Support the Nonattainment Plan.	Linn County	11/16/1979	3/6/1980, 45 FR 14561	[FRL 1427–5].
(14) Lead Plan	Statewide	8/19/1980	3/20/1981, 46 FR 17778	[A–7–FRL–1776–5].
(15) Letter to Support the Lead Plan.	Statewide	1/19/1981	3/20/1981, 46 FR 17778	[A–7–FRL–1776–5].
(16) Nonattainment Plans to Attain Secondary Standards.	Mason City, Cedar Rapids, Des Moines, Davenport, Keokuk, Council Bluffs, Fort Dodge, Sioux City, Clinton, Marshalltown, Muscatine, Waterloo.	4/18/1980	4/17/1981, 46 FR 22368	[A–7–FRL 1792–2].
(17) Information to Support the Particulate Matter Nonattainment Plan.	Mason City, Cedar Rapids, Des Moines, Davenport, Keokuk, Council Bluffs, Fort Dodge, Sioux City, Clinton, Marshalltown, Muscatine, Waterloo.	9/16/1980	4/17/1981, 46 FR 22368	[A–7–FRL 1792–2].

EPA-APPROVED IOWA NONREGULATORY PROVISIONS—Continued

Name of nonregulatory SIP provision	Applicable geographic or nonattainment area	State submittal date	EPA Approval date	Explanation
(18) Information to Support the Particulate Matter Nonattainment Plan.	Mason City, Cedar Rapids, Des Moines, Davenport, Keokuk, Council Bluffs, Fort Dodge, Sioux City, Clinton, Marshalltown, Muscatine, Waterloo.	11/17/1980	4/17/1981, 46 FR 22368	[A–7–FRL 1792–2].
(19) Schedule for Studying Nontraditional Sources of Particulate Matter and for Implementing the Results.	Mason City, Cedar Rapids, Des Moines, Davenport, Keokuk, Council Bluffs, Fort Dodge, Sioux City, Clinton, Marshalltown, Muscatine, Waterloo.	6/26/1981	3/5/1982, 47 FR 9462	[A–7–FRL–2057–7].
(20) Air Monitoring Strategy	Statewide	7/15/1981	4/12/1982, 47 FR 15583	[A–5–FRL–2076–5].
(21) Letter of Commitment to Revise Unapprovable Portions of Chapter 22.	Statewide	5/14/1985	9/12/1985, 50 FR 37176	[EPA Action IA 1582; A–7–FRL–2895–9].
(22) Letter of Commitment to Submit Stack Height Regulations and to Implement the EPA's Regulations until the State's Rules Are Approved.	Statewide	4/22/1986	7/11/1986, 51 FR 25199	[EPA Action IA 2060; A–7–FRL–3046–8].
(23) Letter of Commitment to Implement the Stack Height Regulations in a Manner Consistent with the EPA's Stack Height Regulations with Respect to NSR/PSD Regulations.	Statewide	4/22/1987	6/26/1987, 52 FR 23981	[A–7–FRL–3216–5].
(24) PM_{10} SIP	Statewide	10/28/1988	8/15/1989, 54 FR 33536	[FRL–3627–7].
(25) Letter Pertaining to NO_X Rules and Analysis Which Certifies the Material Was Adopted by the State on October 17, 1990.	Statewide	11/8/1990	2/13/1991, 56 FR 5757 ...	[FRL–3903–5].
(26) SO_2 Plan	Clinton	3/13/1991	11/1/1991, 56 FR 56158	[IA–21–5182; FRL–4014–4].
(27) Letter Withdrawing Variance Provisions.	Polk County	10/23/1991	11/29/1991, 56 FR 60924	[FRL–IA–4–1–5308; FRL–4034–5] Correction notice published 1/26/1993.
(28) Letter Concerning Open Burning Exemptions.	Statewide	10/3/1991	1/22/1992, 57 FR 2472 ...	[IA5–1–5380; FRL–4039–5].
(29) Compliance Sampling Manual.	Statewide	1/5/1993	5/12/1993, 58 FR 27939	[IA–8–1–5750; FRL–4618–6].
(30) Small Business Assistance Plan.	Statewide	12/22/1992	9/27/1993, 58 FR 50266	[IA–9–1–5859; FRL–4734–5].
(31) Voluntary Operating Permit Program.	Statewide	12/8/1994, 2/16/1996, 2/27/1996	4/30/1996, 61 FR 18958	[IA 003–1003, FRL–5455–4].
(32) SO_2 Plan	Muscatine	6/19/1996 5/21/1997	12/1/1997, 62 FR 63454	[IA 036–1036, FRL–5929–3].
(33) SO_2 Maintenance Plan	Muscatine	4/25/1997	3/19/1998, 63 FR 13343	[IA 040–1040(a), FRL–5980–2].
(34) SO_2 Control Plan	Cedar Rapids	9/11/1998	3/11/1999, 64 FR 12087	[IA 058–1058a; FRL–6308–5].
(35) PM_{10} Control Plan	Buffalo, Iowa	10/1/1998	3/18/1999, 64 FR 13346	[IA 059–1059a; FRL–6310–7].
(36) CAA 110(a)(2)(D)(i) SIP—Interstate Transport.	Statewide	11/22/2006	3/8/2007, 72 FR 10380 ...	[EPA–R07–OAR–2006–1015; FRL–8285–1].

EPA-APPROVED IOWA NONREGULATORY PROVISIONS—Continued

Name of nonregulatory SIP provision	Applicable geographic or nonattainment area	State submittal date	EPA Approval date	Explanation
(37) SO_2 Maintenance Plan for the Second 10-year Period.	Muscatine	4/5/2007	8/1/2007; 72 FR 41900	[EPA–R07–OAR–2007–0477, FRL–8448–5].
(38) CAA 110(a)(1) and (2)-Ozone Infrastructure SIP.	Statewide	6/15/2007	3/4/2008; 73 FR 11554	[EPA–R07–OAR–2007–1180, FRL–8535–9].
(39) Regional Haze plan for the first implementation period.	Statewide	3/25/2008	6/26/2012, 77 FR 38007	[EPA–R07–OAR–2012–0153, FRL–9688–1] § 52.842(a); Limited Approval.
(40) Sections 110(a)(1) and (2) Infrastructure Requirements 2008 Lead NAAQS.	Statewide	11/4/2011	11/2/2015; Correction 3/25/2016, 81 FR 16094	This action addresses the following CAA elements: 110(a)(2)(A), (B), (C), (D), (E), (F), (G), (H), (J), (K), (L), and (M). 110(a)(2)(I) is not applicable.
(41) Section 128 Declaration: Conflicts of Interest Provisions;				
Constitution of the State of Iowa, Article 1, Section 2.				This action addresses the following sections of the Constitution of the State of Iowa, Article 1, section 2;
Iowa Code: 4.4.(5), 7E.4, Chapter 68B				Iowa Code : 4.4 (5), 7e.4, Chapter 68B;
Iowa Administrative Code: 351 IAC 6.11, 351 IAC 6.14(2), 351 IAC 6.19, 351 IAC 7.1-7.2, 567 IAC 1.11 (1–9).	Statewide	5/11/2015	11/2/2015; Correction 3/25/2016, 81 FR 16094	Iowa Administrative Code: 351 IAC 6.11, 351 IAC 6.14(2), 351 IAC 6.19, 351 IAC 7.1–7.2, 567 IAC 1.11(1–9).
(42) Lead attainment SIP	Portions of Pottawattamie County.	1/30/2015	2/26/2016, 81 FR 9770	[EPA–R07–OAR–2015–0582; FRL–9942–79–Region 7].
(43) Sections 110(a)(1) and (2) Infrastructure Requirements 2008 Ozone NAAQS.	Statewide	1/17/2013	9/20/2016, 81 FR 64347	This action approves the following CAA elements: 110(a)(2)(A), (B), (C), (D)(i)(II)—prong 3 only, (E), (F), (G), (H), (J), (K), (L), and (M). 110(a)(2)(D)(i)(II)—prong 4 is disapproved. 110(a)(2)(I) is not applicable. [EPA–R07–OAR–2016–0407; FRL–9952–55–Region 7].
(44) State Implementation Plan (SIP) Revision for the Attainment and Maintenance of National Ambient Air Quality Standards for Regional Haze (2013 Five-Year Progress Report).	Statewide	7/19/2013	8/15/2016, 81 FR 53924	[EPA–R07–OAR–2014–0365; FRL–9949–82–Region 7.
(45) Sections 110(a)(1) and (2) Infrastructure Requirements 1997 $PM_{2.5}$ NAAQS.	Statewide	3/21/2008	8/16/2016, 81 FR 54502	This action addresses the following CAA elements: 110(a)(2)(A), (B), (C), (D)(i)(II), prong 3, (E), (F), (G), (H), (J), (K), (L), and (M). 110(a)(2)(I) is not applicable.
(46) Sections 110(a)(1) and (2) Infrastructure Requirements 2006 $PM_{2.5}$ NAAQS.	Statewide	7/23/2013	8/16/2016, 81 FR 54502	This action addresses the following CAA elements: 110(a)(2)(A), (B), (C), (D)(i)(II), prong 3, (E), (F), (G), (H), (J), (K), (L), and (M). 110(a)(2)(I) is not applicable.

EPA-APPROVED IOWA NONREGULATORY PROVISIONS—Continued

Name of nonregulatory SIP provision	Applicable geographic or nonattainment area	State submittal date	EPA Approval date	Explanation
(47) Sections 110(a)(1) and (2) Infrastructure Requirements 2010 Sulfur Dioxide NAAQS.	Statewide	7/23/2013	3/22/2018, 83 FR 12486	This action addresses the following CAA elements: 110(a)(2)(A), (B), (C), D(i)(II) prong 3 only, D(ii), (E), (F), (G), (H), (J), (K), (L), and (M). [EPA–R07–OAR–2017–0267; FRL–*9975–78*–Region 7].
(48) Sections 110(a)(1) and (2) Infrastructure Requirements 2010 Nitrogen Dioxide NAAQS.	Statewide	7/23/2013, 3/1/2017	3/22/2018, 83 FR 12491	This action addresses the following CAA elements: 110(a)(2)(A), (B), (C), (D)(i)(I) prongs 1 and 2, D(i)(II) prong 3 only, D(ii), (E), (F), (G), (H), (J), (K), (L), and (M). [EPA–R07–OAR–2017–0208; FRL–*9975–69*—Region 7].
(49) Sections 110(a)(1) and (2) Infrastructure Requirements 2012 annual fine Particulate Matter NAAQS.	Statewide	12/15/2015	3/22/2018, 83 FR 12488	This action addresses the following CAA elements: 110(a)(2)(A), (B), (C), D(i)(II) prong 3 only, D(ii), (E), (F), (G), (H), (J), (K), (L), and (M). [EPA–R07–OAR–2017–0517; FRL–*9975–68*–Region 7].

[64 FR 7094, Feb. 12, 1999]

EDITORIAL NOTES: For FEDERAL REGISTER citations affecting §52.820, see the List of CFR Sections Affected, which appears in the Finding Aids section of the printed volume and at *www.fdsys.gov*.

EFFECTIVE DATE NOTES: 1. At 83 FR 26602, June 8, 2018, §52.820 was amended in the table of paragraph (c) by revising the heading for chapter 20 and the entries for ''567–20.1'', ''567–20.2'', ''567–21.1'', ''567–22.1'', ''567–23.3'', ''567–25.1'', ''567–26.2'', ''567–27.1'', ''567–27.3'', ''567–28.1'', ''567–31.2'', ''567–33.1'', and ''567–33.3,'' effective July 9, 2018. For the convenience of the user, the revised text is set forth as follows:

§52.820 Identification of plan.

* * * * *

(c) * * *

EPA-APPROVED IOWA REGULATIONS

Iowa citation	Title	State effective date	EPA approval date	Explanation
Iowa Department of Natural Resources Environmental Protection Commission [567]				
Chapter 20—Scope of Title—Definitions				
567–20.1	Scope of Title-Definitions.	3/22/2017	6/8/2018, 83 FR 26599.	This rule is a non-substantive description of the Chapters contained in the Iowa rules. EPA has not approved all the Chapters to which this rule refers.
567–20.2	Definitions	3/22/2017	6/8/2018, 83 FR 26599.	The definitions for ''anaerobic lagoon,'' ''odor,'' ''odorous substance,'' ''odorous substance source'' are not SIP approved.

EPA-APPROVED IOWA REGULATIONS—Continued

Iowa citation	Title	State effective date	EPA approval date	Explanation
* * *	*	*	*	* * *
Chapter 21—Compliance				
567–21.1	Compliance Schedule.	3/22/2017	6/8/2018, 83 FR 26599.	
* * *	*	*	*	* * *
Chapter 22—Controlling Pollution				
567–22.1	Stationary Sources	3/22/2017	6/8/2018, 83 FR 26599.	In 22.1(3) the following sentence regarding electronic submission is not SIP approved. The sentence is: ''Alternatively, the owner or operator may apply for a construction permit for a new or modified stationary source through the electronic submittal format specified by the department.''
* * *	*	*	*	* * *
Chapter 23—Emission Standards for Contaminants				
* * *	*	*	*	* * *
567–23.3	Specific Contaminants.	3/22/2017	6/8/2018, 83 FR 26599.	567 IAC 23.3(3) ''(d)'' is not SIP approved.
* * *	*	*	*	* * *
Chapter 25—Measurement of Emissions				
567–25.1	Testing and Sampling of New and Existing Equipment.	3/22/2017	6/8/2018, 83 FR 26599.	
Chapter 26—Prevention of Air Pollution Emergency Episodes				
* * *	*	*	*	* * *
567–26.2	Episode Criteria	3/22/2017	6/8/2018, 83 FR 26599.	
* * *	*	*	*	* * *
Chapter 27—Certificate of Acceptance				
567–27.1	General	3/22/2017	6/8/2018, 83 FR 26599.	
* * *	*	*	*	* * *
567–27.3	Ordinance or Regulations.	3/22/2017	6/8/2018, 83 FR 26599.	
* * *	*	*	*	* * *
Chapter 28—Ambient Air Quality Standards				
567–28.1	Statewide standards.	3/22/2017	6/8/2018, 83 FR 26599.	
* * *	*	*	*	* * *
Chapter 31—Nonattainment Areas				
* * *	*	*	*	* * *
567–31.2	Rescinded	3/22/2017	6/8/2018, 83 FR 26599.	Rescinded and reserved

EPA-APPROVED IOWA REGULATIONS—Continued

Iowa citation	Title	State effective date	EPA approval date	Explanation
* * *	*	*	*	*
Chapter 33—Special Regulations and Construction Permit Requirements for Major Stationary Sources—Prevention of Significant Deterioration (PSD) of Air Quality				
567–33.1	Purpose	3/22/2017	6/8/2018, 83 FR 26599.	
567–33.3	Special Construction Permit Requirements for Major Stationary Sources in Areas Designated Attainment or Unclassified (PSD).	3/22/2017	6/8/2018, 83 FR 26599.	Provisions of the 2010 $PM_{2.5}$ PSD—Increments, SILs and SMCs rule (published October 20, 2010) relating to SILs and SMCs that were affected by the January 22, 2013, U.S. Court of Appeals decision are not SIP approved. Iowa's rule incorporating EPA's 2007 revision of the definition of "chemical processing plants" (the "Ethanol Rule," (published May 1, 2007) or EPA's 2008 "fugitive emissions rule," (published December 19, 2008) are not SIP-approved.
* * *	*	*	*	*

* * * * *

EFFECTIVE DATE NOTES: 2. At 83 FR 30349, June 28, 2018, § 52.820 was amended in the table of paragraph (d) by revising the entry "(29) Grain Processing Corporation," effective July 30, 2018. For the convenience of the user, the revised text is set forth as follows:

§ 52.820 Identification of plan

* * * * *

(d) * * *

EPA-APPROVED IOWA SOURCE-SPECIFIC ORDERS/PERMITS

Name of source	Order/Permit No.	State effective date	EPA approval date	Explanation
*	*	*	*	*
(29) Grain Processing Corporation.	Administrative Consent Order No. 2014–AQ–A1.	1/16/2017	12/1/2014, 79 FR 71025; amendment approved 6/28/2018, 83 FR 30348.	The last sentence of Paragraph 5, Section III and Section VI are not approved by EPA as part of the SIP.
*	*	*	*	*

* * * * *

§ 52.821 Classification of regions.

The Iowa plan was evaluated on the basis of the following classification:

Air quality control region	Pollutant				
	Particulate matter	Sulfur oxides	Nitrogen dioxide	Carbon monoxide	Photochemical oxidants (hydrocarbons)
Metropolitan Omaha-Council Bluffs Interstate	I	II	III	III	III
Metropolitan Sioux Falls Interstate	II	III	III	III	III
Metropolitan Sioux City Interstate	III	III	III	III	III
Metropolitan Dubuque Interstate	I	III	III	III	III

Air quality control region	Pollutant				
	Particulate matter	Sulfur oxides	Nitrogen dioxide	Carbon monoxide	Photochemical oxidants (hydrocarbons)
Metropolitan Quad Cities Interstate	I	III	III	III	III
Burlington-Keokuk Interstate	I	I	III	III	III
Northwest Iowa Intrastate	III	III	III	III	III
North Central Iowa Intrastate	IA	III	III	III	III
Northeast Iowa Intrastate	I	III	III	III	III
Southwest Iowa Intrastate	III	III	III	III	III
South Central Iowa Intrastate	I	III	III	III	I
Southeast Iowa Intrastate	III	III	III	III	III

[37 FR 10865, May 31, 1972, as amended at 39 FR 16346, May 8, 1974]

§ 52.822 Approval status.

(a) With the exceptions set forth in this subpart, the Administrator approves Iowa's plan for the attainment and maintenance of the national standards. Further, the Administrator finds the plan satisfies all requirements of Part D, Title I, of the Clean Air Act as amended in 1977, except as noted below.

(b) [Reserved]

[45 FR 14567, Mar. 6, 1980, as amended at 46 FR 47546, Sept. 29, 1981; 75 FR 82555, Dec. 30, 2010; 76 FR 67070, Oct. 31, 2011]

§ 52.823 PM_{10} State Implementation Plan Development in Group II Areas.

The Iowa Department of Natural Resources committed to comply with the PM_{10} regulations as set forth in 40 CFR part 51. In a letter to Morris Kay, EPA, dated October 28, 1988, Mr. Larry J. Wilson, Director, Iowa Department of Natural Resources, stated:

Three groups within the State of Iowa have been classified as Group II areas for fine particulate (PM–10) State Implementation Plan (SIP) development purposes. This includes portions of the cities of Des Moines, Mason City, and Cedar Rapids. The specific boundaries of these areas were identified in a letter of October 13, 1987, from Peter R. Hamlin to Carl Walter. The remainder of the State was classified as Group III.

In accordance with the SIP development procedures identified in the preamble of the PM–10 regulations for Implementing Revised Particulate Matter Standards, promulgated July 1, 1987, the State of Iowa commits to perform the following activities in these three Group II areas of the state:

(a) Gather ambient PM–10 data, to an extent consistent with minimum EPA requirements (note the network description contained in a letter of January 26, 1988, from Peter R. Hamlin to John Helvig).

(b) Analyze and verify the ambient PM–10 data and report exceedances of the 24-hour PM–10 National Ambient Air Quality Standards (NAAQS) to the Regional Office within 60 days of each exceedance.

(c) Immediately notify the Regional Office:

(1) Upon the availability of an appropriate number of verifiable 24-hour NAAQS exceedances to indicate a violation (see Section 2.0 of the PM–10 SIP development guideline) or

(2) when an annual arithmetic mean (AAM) above the annual PM–10 NAAQS becomes available.

(d) Within thirty (30) days of any notification of the Regional Office pursuant to (c) above (or upon collection of thirty-six (36) months of PM–10 ambient air quality data acceptable to EPA, whichever comes first) determine whether the measures in the existing SIP will assure timely attainment and maintenance of the primary PM–10 NAAQS and immediately notify the Regional Office of the results of this determination.

(e) Within six (6) months of any notification pursuant to (d) above, adopt and submit to EPA a PM–10 control strategy that assures attainment as expeditiously as practicable but not later than three (3) years from approval of the Committal SIP.

Because of the uncertainty about when the determination can be made pursuant to (d) above, it is difficult to determine if that control strategy could provide for the attainment of the PM–10 NAAQS within three years from the date EPA approves this Committal SIP. Therefore, I reserve the right to request a two-year extension of the attainment date as provided in Section 110(e) of the Clean Air Act, if and when the State of Iowa submits a SIP revision for any of these areas of the state.

The State of Iowa also commits to develop a PM–10 emission inventory for the areas submitted as part of any PM–10 SIP pursuant to items (c), (d), and (e) above. If the PM–10

NAAQS are not violated, the State of Iowa will proceed with this inventory for the three Group II areas in accordance with the following schedule:

October 1, 1988—Request special assistance funds from EPA to perform the inventory.
October 1, 1989—Initiate inventory.
August 1, 1990—Complete inventory.
October 31, 1990*—Submit inventory as part of a determination of adequacy that the current SIP will attain and maintain the PM–10 NAAQS.

[54 FR 33539, Aug. 15, 1989]

§ 52.824 Original identification of plan section.

(a) This section identifies the original ''Air Implementation Plan for the State of Iowa'' and all revisions submitted by Iowa that were Federally approved prior to July 1, 1998.

(b) The plan was officially submitted on January 27, 1972.

(c) The plan revisions listed below were submitted on the dates specified:

(1) Request for a two-year extension to meet the National Primary and Secondary Ambient Air Quality Standards for nitrogen dioxide in the Metropolitan Omaha-Council Bluffs Interstate Air Quality Control Region was submitted by the Governor on January 27, 1972. (Non-regulatory)

(2) Revisions of Appendices D and G of the plan were submitted on February 2, 1972, by the State Department of Health. (Non-regulatory)

(3) Source surveillance and record maintenance statements were submitted on April 14, 1972, by the State Department of Health. (Non-regulatory)

(4) Revised statement regarding public availability of emission data was submitted on May 2, 1972, by the State Department of Health. (Non-regulatory)

(5) State submitted Senate File 85 which created the Department of Environmental Quality and replaced the Iowa air pollution control statute which appeared as Chapter 136B of the Code of Iowa, on May 4, 1972. (Regulatory)

(6) A letter describing the issuance of a Certificate of Acceptance for the local air pollution control programs conducted by the Linn County Board of Health for the jurisdictions of the City of Cedar Rapids and Linn County, and the Des Moines-Polk County Health Department for the jurisdictions of the City of Des Moines and Polk County was submitted by the State Department of Health on December 14, 1972. (Non-regulatory)

(7) Compliance schedules were submitted by the State in February 1973. (Regulatory)

(8) Compliance schedules were submitted by the State in May 1973. (Regulatory)

(9) The State of Iowa High Air Pollution Episode Contingency Plan was submitted on June 20, 1973, by the Governor.

(10) The letter which requested the inclusion of the Linn County Health Department Rules and Regulations, the City of Cedar Rapids Air Pollution Control Ordinance, the Polk County Rules and Regulations—Air Pollution Control, and the City of Des Moines Air Pollution Control Regulations in the State of Iowa implementation plan was submitted by the State Department of Environmental Quality on June 25, 1974. (No approval action was taken on the request because it did not meet the procedural requirements specified in 40 CFR part 51.)

(11) Revisions of Rules 2.1, 3.1, 3.4, 4.1, 4.3(3) and 4.3(4) of the Iowa Rules and Regulations Relating to Air Pollution Control were submitted on April 24, 1974 (by the Governor's office). (No approval or disapproval action was taken on amended Subrule 4.3(3)a., which restricts emissions of sulfur oxides from fuel-burning sources.) (Regulatory)

(12) Compliance schedules were submitted by the State in May 1974.

(13) Compliance schedules were submitted by the State in May 1974.

(14) Compliance schedules were submitted by the State in July 1974.

(15) Compliance schedules were submitted by the State in August 1974.

(16) A letter from the Director of the Department of Environmental Quality, dated August 29, 1974, which requested that no further action be taken on Subrule 4.3(3) a. as submitted on April 24, 1974. (Regulatory)

*Presuming that sufficient ambient data acceptable to EPA are collected by July 31, 1990, and available by September 30, 1990.

(17) Compliance schedules were submitted by the State in September 1974.

(18) Compliance schedules were submitted by the State in November 1974.

(19) Compliance schedules were submitted by the State in February 1975.

(20) Compliance schedules were submitted by the State in April 1975.

(21) Compliance schedules were submitted by the State in June 1975.

(22) Revisions of Rules 1.2, 2.1, 3.1, 3.4, 4.1, 4.2, 4.3, 5.1, 7.1, 8.3 and 8.4 of the Iowa Rules and Regulations Relating to Air Pollution Control were submitted on July 17, 1975, by the Governor's office. (Regulatory) (No approval or disapproval action was taken on Subrules 4.3(2)c. or 4.3(3)b.)

(23) Summary of the public hearing which was held on the revised rules which were submitted on July 17, 1975, by the Governor's office was submitted by the Iowa Department of Environmental Quality on September 3, 1975. (non-regulatory)

(24) Letter which withdrew amended Subrule 4.3(2)c. from the proposed Iowa plan revision submitted on July 17, 1975, was submitted by the Governor's office on January 20, 1976.

(25) Revisions to Rules 1.2, 2.1, 3.1, 3.2, 4.1, 4.3, 4.4, and new Chapters 14 and 52 of the Iowa Administrative Code Relating to Air Pollution Control were submitted June 9, 1976, by the Department of Environmental Quality (Subrules 4.3(3)a(1) and 4. 3(3)a(5) were disapproved).

(26) Additional air quality modeling to support the sulfur dioxide emission standards of Subrules 4.3(3)a(1) and 4.3(3)a(2) was submitted March 4, 1977, by the Department of Environmental Quality (Non-regulatory).

(26a) Revisions of Rules 1.2, 4.3(2)b, 4.4(6), 4.4(12) and of Chapter 7 of the Iowa Administrative Code relating to Air Pollution Control were submitted June 20, 1977, by the Department of Environmental Quality.

(27) Nonattainment plan provisions as required by the Clean Air Act Amendments of 1977 were submitted on June 22, 1979, by the Department of Environmental Quality. The submission included amended rule 4.3(2) relating to fugitive dust and new rule 4.5 relating to offsets for particulate matter. The revisions included attainment plans for particulate in Mason City and Davenport, particulate and ozone in Cedar Rapids and particulate and carbon monoxide in Des Moines. The submission was disapproved in part for failure to meet the requirements of Section 173 and was conditionally approved with respect to several requirements.

(28) On October 8, 1979, the Iowa Department of Environmental Quality submitted additional information to support the June 22, 1979, submission.

(29) On November 16, 1979, the Iowa Air Quality Commission submitted additional information and commitments to allow approval or conditional approval of portions of the June 22, 1979, submission.

(30) Nonattainment plan provisions as required by the Clean Air Act Amendments of 1977 were submitted on April 18, 1980, by the Department of Environmental Quality. The submission included amended rule 4.3(2) relating to fugitive dust and amended rule 3.5 relating to particulate matter offsets. The revisions included plans to attain the secondary particulate standards for all areas designated nonattainment as of March 6, 1980. The submission was conditionally approved with respect to several requirements.

(31) The State of Iowa Lead State Implementation Plan was submitted on August 19, 1980 by the Director of the Department of Environmental Quality.

(32) Additional information to support the April 18, 1980 submission was submitted on September 16, 1980, by the Department of Environmental Quality.

(33) Additional information to support the April 18, 1980 submission was submitted on November 17, 1980, by the Department of Environmental Quality.

(34) A revised Chapter 5, dealing with excess emissions and malfunctions was submitted on December 23, 1980, by the Department of Environmental Quality.

(35) [Reserved]

(36) A letter was submitted dated January 19, 1981 by the Director of the Department of Environmental Quality which provided additional information concerning the Iowa Lead State Implementation Plan.

(37) A variance from 400—4.2(1) of the Iowa Administrative Code for the Iowa

Army Ammunition Plant at Middletown, Iowa, was submitted on October 19, 1979 by the Executive Director.

(38) Revisions to Subrule 400—4.3(2)''c'' relating to fugitive emissions control and a document describing how this subrule is to be enforced were submitted on June 1, 1981, by the Department of Environmental Quality.

(39) A schedule for studying nontraditional sources of particulate matter and for implementing the results of the studies in the form of control strategies was submitted on June 26, 1981 by the Department of Environmental Quality. (Non-Regulatory).

(40) Revisions to Subrule 400—4.3(2)''b'' relating to particulate emissions from fuel burning sources were submitted on July 31, 1981, by the Department of Environmental Quality.

(41) The Iowa Ambient Air Monitoring Strategy was submitted July 15, 1981, by the Department of Environmental Quality (non-regulatory).

(42) A conditional permit containing an alternative emission reduction program for the Progressive Foundry, Inc., of Perry, Iowa, under 400–3.7 and 400–4.6 of the Iowa Administrative Code; and an administrative order setting forth a compliance schedule, were submitted on December 18, 1981, by the Executive Director. The conditional permit specifies particulate emissions not to exceed 16.3 pounds per hour from the gray iron cupola with a process weight rate not to exceed 8534 pounds per hour and specifies the casting shakeout exhaust system shall not exceed 0.05 grains per standard cubic foot nor 12.8 pounds per hour of particulate matter. The compliance schedule specifies a final compliance date of September 1, 1983.

(43) On July 1, 1983, the State's air pollution control regulations were recodified at Department 900, Title II, Chapters 20 through 29.

(44) Revised Chapter 22 regulations, dealing with new source review in nonattainment areas, were submitted on July 18, 1984, by the Iowa Department of Water, Air and Waste Management. Subrules 22.5(4) g, i, and j remain unapproved. EPA will temporarily defer action on these subrules pending a May 14, 1985, commitment from the State to submit appropriate revisions.

(i) *Incorporation by reference.* Revised Chapter 22 regulations, dealing with new source review in nonattainment areas, adopted by the State on July 17, 1984.

(ii) *Additional material.*May 14, 1985, letter of commitment from the State to revise unapprovable portions of their Chapter 22 air pollution regulations.

(45) Revised Chapter 22 subrules 22.5(2) a and b; and revised subrules 22.5(4) g, i, and j, all relating to new source review in nonattainment areas, were submitted on December 31, 1985, by the Iowa Department of Water, Air and Waste Management.

(a) *Incorporation by reference.*

(i) Revised Chapter 22 subrules 22.5(2) a and b; and subrules 22.5(4) g, i, and j, adopted by the State on December 17, 1985.

(ii) April 22, 1986, letter of commitment from the Iowa Department of Water, Air and Waste Management to submit stack height regulations by May 30, 1986, and to implement EPA's stack height requirements until such time that the regulations are fully approved.

(46) Revised Chapter 22 regulations pertaining to new source review in attainment and unclassified areas of the state (PSD) were submitted on March 9, 1987, by the Iowa Department of Natural Resources.

(i) *Incorporation by reference.* (A) Iowa Administrative Bulletin (ARC 7446), amendments to Chapter 22, ''Controlling Pollution,'' adopted by the Iowa Environmental Protection Commission on February 17, 1987.

(B) Letter from Iowa dated April 22, 1987, committing to implementation of its stack height regulations in a manner consistent with EPA's stack height regulations with respect to new source review/PSD regulations.

(47) Revised Chapters 22 and 23 regulations pertaining to stack height credits for modeling purposes were submitted on May 20, 1986, by the Iowa Department of Natural Resources. Revised definition of ''emission limitation'' and ''emission standard'' at Iowa regulation 567.20.2(455B), Definitions.

(i) *Incorporation by reference.* (A) Iowa Administrative Bulletin (ARC 6566),

amendments to Chapter 22, ''Controlling Pollution'' and Chapter 23, ''Emission Standards for Contaminants'' adopted by the Iowa Environmental Protection Commission on April 22, 1986, effective June 25, 1986.

(B) Iowa Administrative Bulletin (ARC 8023) amendment to 567–20.2(455B). Effective September 22, 1987.

(48) Revised Chapter 22, subrule 22.1(2)''d'' exemptions from permit requirements were submitted on September 13, 1988, by the Iowa Department of Natural Resources. The revision clarifies permit exemptions for certain grain roasting equipment.

(i) *Incorporation by reference.* (A) Amendment to Chapter 22, ''Controlling Pollution,'' Iowa Administrative Code, subrule 22.1(2)''d'', effective September 14, 1988.

(49) Revised Polk County, Iowa, Board of Health Rules and Regulations, Chapter V, Air Pollution, submitted by the Iowa Department of Natural Resources on February 3, 1988. EPA approves these regulations with the provision that any operating permit which changes any requirement of the Iowa SIP, including requirements in any construction permit, must be submitted to EPA, and approved, as a SIP revision. In the absence of such approval, the enforceable requirements shall be those in the Iowa SIP.

(i) *Incorporation by reference.* (A) Ordinance No. 28, Amendment to Polk County Board of Health Rules and Regulations chapter V, Air Pollution, Article I, 5–1 and 5–2 (except for variance); Article II, 5–3; and Article X, 5–28 through 5.50–1 (except for 5–49 and 5–50), effective October 8, 1987.

(ii) *Additional material.* (A) None.

(50) Revised Linn County, Iowa, Chapter 10 Ordinance ''Air Pollution Control'' submitted as a SIP revision by the Iowa Department of Natural Resources on February 3, 1988. EPA approves these regulations with the provision that any operating permit which changes any requirement of the Iowa SIP, including requirements in any construction permit, must be submitted to EPA, and approved, as a SIP revision. In the absence of such approval, the enforceable requirements shall be those in the Iowa SIP.

(i) *Incorporation by reference.* (A) Linn County Chapter 10 Ordinance ''Air Pollution Control'' sections 10.1 (except for 10.1(50)), 10.2, 10.3, and 10.4, adopted by the Linn County Board of Supervisors on September 2, 1987.

(ii) *Additional material.* (A) None.

(51) Revised Iowa regulations pertaining to PM_{10} were submitted by the state on October 28, 1988. These rules became effective on December 21, 1988.

(i) *Incorporation by reference.* (A) Amended Iowa Administrative Code pertaining to the prevention, abatement, and control of air pollution: Chapter 20, ''Scope of Title—Definitions—Forms—Rules of Practice;'' Chapter 22, ''Controlling Pollution;'' Chapter 26, ''Prevention of Air Pollution Emergency Episodes;'' and Chapter 28, ''Ambient Air Quality Standards,'' effective December 21, 1988.

(ii) *Additional information.* (A) None.

(52) Revised chapter 22, subrule 22.4(1), submitted on May 7, 1990, incorporates by reference revised EPA Modeling Guideline Supplement A, July 1987, and recodified air quality rules chapter 20–29.

(i) *Incorporation by reference.* (A) Amendment to chapter 22, ''Controlling Pollution,'' Iowa Administrative Code, subrule 22.4(1). Effective March 14, 1990.

(B) Recodification of Iowa Administrative Code, title II—Air Quality, chapters 20–29, effective December 3, 1986.

(53) Revised chapter 22, rule 22.4(455B), submitted on November 8, 1990, incorporates by reference revised EPA PSD rules pertaining to NO_X increments.

(i) *Incorporation by reference.* (A) Amendment to chapter 22, ''Controlling Pollution,'' Iowa Administrative Code, subrule 22.4, adopted by the Environmental Protection Commission on October 17, 1990, effective November 21, 1990.

(ii) *Additional material.* (A) Letter from the state dated November 8, 1990, pertaining to NO_X rules and analysis which certifies the material was adopted by the state on October 17, 1990.

(54) On March 13, 1991, the Iowa Department of Natural Resources (IDNR) submitted a plan revision pertaining to major SO_2 sources in Clinton County, Iowa.

(i) *Incorporation by reference.* (A) Administrative Consent Order #90–AQ–10, signed by Larry Wilson, Director, IDNR, dated July 5, 1990, and revision dated March 25, 1991. Also, three letters to Archer-Daniels-Midland (ADM) Company dated June 20, 1990, signed by Michael Hayward, IDNR, which contain or reference new or revised permit conditions for ADM sources, and a letter to ADM from IDNR dated February 26, 1991, correcting certain permit provisions.

(B) Administrative Consent Order #89–AQ–04, signed by Larry Wilson, Director, IDNR, dated February 21, 1990. Also, two letters to Interstate Power Company dated January 25 and 29, 1990, and signed by Michael Hayward, IDNR, which contain supplemental permit condition for permits 74-A-117-S and 78–A–157–S.

(ii) *Additional material.* (A) Letter and supplemental material from Larry J. Wilson to Morris Kay dated March 13, 1991.

(55) Revised Polk County, Iowa Board of Health Rules and Regulations, chapter V, Air Pollution, submitted by the Iowa Department of Natural Resources on May 23, 1991.

(i) *Incorporation by reference.* (A) Polk County Board of Health Rules and Regulations, chapter V, Air Pollution, Ordinances 28, 72 and 85, effective May 1, 1991, except for the following: Article I, definition of variance; Article VI, Section 5–16 (n), (o), and (p); Article VI, Section 5–17(d), variance provision; Article VIII; Article IX, Sections 5–27(3) and 5–27(4); and Article X, Division 5—Variance.

(ii) *Additional material.* (A) Letter from Allan Stokes to William A. Spratlin dated October 23, 1991.

(56) Revised Chapter 23, rule 23.2, submitted on October 3, 1991, incorporates changes to the open burning rule.

(i) *Incorporation by reference.* (A) Amendment to Chapter 23, ''Emission Standards for Contaminants, ''Iowa Administrative Code, subrule 23.2, adopted by the Environmental Protection Commission, effective September 12, 1990.

(ii) *Additional information.* (A) Letter from Allan Stokes, IDNR, to William Spratlin, dated October 3, 1991.

(57) On January 5, 1993, the Iowa Department of Natural Resources (IDNR) submitted air quality rule revisions to Iowa Administrative Code, Chapters 20, 22, 23, 24, 25, 29, and revisions to the Compliance Sampling Manual.

(i) *Incorporation by reference.* (A) Revisions to Chapter 20 (20.2), Scope of Title-Definitions-Forms-Rules of Practice; Chapter 22 (22.3(1), 22.4, 22.5(2)), Controlling Pollution; Chapter 23 (23.2(3), 23.3(2), 23.3(3), 23.4(12)), Emission Standards for Contaminants; Chapter 24 (24.1(1), 24.1(5)), Excess Emission; Chapter 25, (25.1(7), 25.1(9)), Measurement of Emissions and rescind 25.1(10)d; and Chapter 29 (29.1), Qualification in Visual Determination of the Opacity of Emissions. These revisions were adopted by the Iowa Environmental Protection Commission on December 21, 1992, and became effective on February 24, 1993.

(ii) *Additional material.* (A) Letter from Larry Wilson, IDNR, to Morris Kay, EPA, dated January 5, 1993, and the Compliance Sampling Manual, revised December 1992.

(58) A plan for implementation of the Small Business Stationary Source Technical and Environmental Compliance Assistance Program was submitted by the Iowa Department of Natural Resources as a revision to the Iowa SIP on December 22, 1992.

(i) *Incorporation by reference.* (A) Revisions to the Iowa State Implementation Plan for the Small Business Stationary Source Technical and Environmental Compliance Assistance Program dated December 1992.

(59) On May 5, 1994, the Director of the Iowa Department of Natural Resources submitted revisions to the State Implementation Plan (SIP) to update the state's incorporation by reference and conformity to various federally approved regulations.

(i) *Incorporation by reference.* (A) Revised rules, ''Iowa Administrative Code,'' effective January 12, 1994. This revision approves an amendment to paragraph 23.2(3)g pertaining to open fires burned for the purpose of training fire-fighting personnel.

(B) Revised rules, ''Iowa Administrative Code,'' effective April 20, 1994. This revision approves amendments to rules 22.4; 23.3(2)d (3) and (4); 23.4(6); and

25.1(9). These rules concern the update of the state's incorporation of prevention of significant deterioration and test method requirements.

(ii) *Additional material.*None.

(60) On May 5, 1994, the Director of the Iowa Department of Natural Resources submitted revisions to the State Implementation Plan (SIP) to update the state's incorporation by reference and conformity to various Federally approved regulations.

(i) *Incorporation by reference.* (A) Revised rules, ''Polk County Ordinance No. 132—Polk County Board of Health Rules and Regulations,'' effective December 2, 1993. This revision approves all articles in Chapter V, except for Article VI, Section 5–16(n) and (p), Article VIII, and Article XIII.

(ii) *Additional material.* (A) None.

(61) On October 18, 1994, and January 26, 1995, the Director of the Iowa Department of Natural Resources submitted revisions to the state implementation plan (SIP) to include special requirements for nonattainment areas, provisions for use of compliance, and enforcement information and adoption of EPA definitions. These revisions fulfill Federal regulations which strengthen maintenance of established air quality standards.

(i) *Incorporation by reference.* (A) Revised rules ''Iowa Administrative Code,'' effective November 16, 1994. This revision approves revised rules 567–20.2, 567–22.5(1)a, 567–22.5(1)f(2), 567–22.5(1)m, 567–22.5(2), 567–22.5(3), 567–22.5(4)b, 567–22.5(6), 567–22.5(7), 567–22.105(2), and new rule 567–21.5. These rules provide for special requirements for nonattainment areas, provisions for use of compliance and enforcement information and adopts EPA's definition of volatile organic compound.

(B) Revised rules, ''Iowa Administrative Code,'' effective February 22, 1995. This revision approves new definitions to rule 567–20.2. This revision adopts EPA's definitions of ''EPA conditional method'' and ''EPA reference method.''

(ii) *Additional material.* None.

(62) [Reserved]

(63) On December 8, 1994; February 16, 1996; and February 27, 1996, the Director of the Iowa Department of Natural Resources submitted revisions to the State Implementation Plan (SIP) to create a voluntary operating permit program as an alternative to Title V. These revisions strengthen maintenance of established air quality standards.

(i) *Incorporation by reference.* (A) ''Iowa Administrative Code,'' sections 567–22.200–22.208, effective December 14, 1994. These rules create the voluntary operating permit program.

(B) ''Iowa Administrative Code,'' sections 567–22.201(1)''a'' and 22.206(1)''h'', effective January 11, 1995.

(C) ''Iowa Administrative Code,'' section 567–22.203(1)''a''(1), effective February 24, 1995.

(D) ''Iowa Administrative Code,'' sections 567–20.2; 22.200; 22.201(1)''a'' and ''b''; 22.201(2)''a''; and 22.206(2)''c'', effective October 18, 1995.

(ii) *Additional material.* (A) Letter from Allan E. Stokes, Iowa Department of Natural Resources, to William A. Spratlin, U.S. EPA, dated February 16, 1995. This letter outlines various commitments by the state to meet requirements outlined by the EPA.

(64) In correspondence dated February 16, 1996, February 19, 1996, and February 27, 1996, the Director of the Iowa Department of Natural Resources (IDNR) submitted revisions to the State Implementation Plan concerning open burning, new source review (NSR) requirements for nonattainment areas, test method and definition updates.

(i) *Incorporation by reference.* (A) ''Iowa Administrative Code,'' section 567–22.8(1), effective July 12, 1995, containing a permit by rule for spray booths.

(B) ''Iowa Administrative Code,'' sections 567–23.2(3); 23.2(4), effective April 19, 1995, addressing open burning.

(C) ''Iowa Administrative Code,'' sections 567–22.5 (2)–(6), (8)–(10), effective March 20, 1996. These rules address NSR requirements in nonattainment areas.

(D) ''Iowa Administrative Code,'' sections 567–20.2; 22.4(1); and 25.1(9), effective July 12, 1995. These rules address test method and definition updates.

(E) ''Iowa Administrative Code,'' section 567–31.1, effective February 22, 1995. This rule addresses permit requirements relating to nonattainment areas.

(ii) *Additional material.* (A) Letter dated July 11, 1997, from Pete Hamlin,

IDNR, to Wayne Leidwanger, EPA, requesting approval under 112(l).

(65) On June 13, 1996, and April 25, 1997, the Director of the Iowa Department of Natural Resources (IDNR) submitted a revision to the State Implementation Plan (SIP) which included permits containing source specific emission limits and conditions for three sources in Muscatine, Iowa.

(i) *Incorporation by reference.* (A) Grain Processing Corporation permits #95–A–374, #74–A–015–S, #79–A–194–S, #79–A–195–S, signed September 18, 1995.

(B) Muscatine Power and Water permits #74–A–175–S, #95–A–373 signed September 14, 1995.

(C) Monsanto Corporation permits #76–A–265S3, #76–A–161S3, signed July 18, 1996.

(ii) *Additional material.* (A) Letters from Allan E. Stokes, IDNR, to Dennis Grams, Environmental Protection Agency, dated June 13, 1996, and April 21, 1997, containing supporting SIP information.

(66) On April 2, 1997, the Director of the Iowa Department of Natural Resources submitted revisions to the State Implementation Plan (SIP) for the State's two local agencies: the Polk County Public Works Department and Linn County Health Department.

(i) *Incorporation by reference.* (A) Revised rules, ''Polk County Board of Health Rules and Regulations: Chapter V, Air Pollution,'' effective December 18, 1996. This revision approves all articles insofar as they pertain to the SIP. Article XIII is specifically excluded from this approval. No action is taken on Sections 5–16(n), 5–16(p), 5–20, and 5–27(3) and (4).

(B) Revised rules, ''Linn County Air Pollution Control Code of Ordinances,'' effective March 7, 1997. This revision approves all sections insofar as they pertain to the SIP. Sections 10.4(1.), 10.11, and 10.15 are specifically excluded from this approval. No action is taken on Sections 10.9(2.), 10.9(3.), 10.9(4.), and the definition of ''federally enforceable'' in Section 10.2.

(ii) *Additional material.* (A) Letter from Allan E. Stokes, Iowa Department of Natural Resources, to William A. Spratlin, Environmental Protection Agency, dated May 15, 1997. This letter provides additional information regarding various administrative requirements outlined in 40 CFR part 51.

(67) In correspondence dated October 21, 1997, and January 21, 1998, the Director of the Iowa Department of Natural Resources submitted revisions to the State Implementation Plan.

(i) *Incorporation by reference.* (A) ''Iowa Administrative Code'' sections567–22.8(1) ''b,'' ''c,'' and ''e,''567–22.203(1) ''a,'' 567–22.300, 567–22.300(1) through 567–22.300(11), 567–23.3(2) ''d,'' and 567–29.1, effective June 12, 1996.

(B) ''Iowa Administrative Code''section 567–20.2, effective October 16, 1996.

(C) ''Iowa Administrative Code'' sectuibs 567–22.300(40 ''b''(1), 567–22.300(8) ''a''(1), and 567–22.300(8)''b''(2), effective December 25, 1996. (D) ''Iowa Administrative Code'' sections 567–20.2, 567–22.2(1), 567–22.201(1) ''a,'' 567–22.201(2) ''b,'' 567–22.202, 567–22.203(1), 567–22.300(3) ''b'' and ''c,'' 567–22.300(8) ''a,'' effective May 14, 1997.

(ii) *Additional material.* (A) ''Iowa Administrative Code'' section 567–23.1(5), Calculation of emission limitations based upon stack height, was renumbered to section 567–23.1(6), effective August 20, 1997.

[37 FR 10865, May 31, 1972. Redesignated at 64 FR 7094, Feb. 12, 1999]

EDITORIAL NOTE: For FEDERAL REGISTER citations affecting § 52.824, see the List of CFR Sections Affected, which appears in the Finding Aids section of the printed volume and at *www.fdsys.gov.*

§ 52.825 Compliance schedules.

(a) [Reserved]

(b) *Regulation for increments of progress.* (1) Except as provided in paragraph (b)(2) of this section, the owner or operator of any stationary source subject to regulation 4.3.(3)(b), ''Rules and Regulations Relating to Air Pollution Control of the Iowa Air Pollution Control Commission'' shall, no later than December 31, 1972, submit to the Administrator for approval, a proposed compliance schedule that demonstrates compliance with the applicable regulation as expeditiously as practicable but no later than January 1, 1975. The compliance schedule shall provide for periodic increments of progress towards compliance. The dates for achievement

of such increments shall be specified. Increments of progress shall include, but not be limited to: Letting of necessary contract for construction or process changes, if applicable; initiation of construction; completion and start-up of control system; performance tests; and submittal of performance test analysis and results.

(2) Where any such owner or operator demonstrates to the satisfaction of the Administrator that compliance with the applicable regulations will be achieved on or before December 31, 1973, no compliance schedule shall be required.

(3) Any owner or operator who submits a compliance schedule pursuant to this paragraph shall, within 5 days after the deadline for each increment of progress, certify to the Administrator whether or not the required increment of the approved compliance schedule has been met.

(4) Any compliance schedule adopted by the State and approved by the Administrator shall satisfy the requirements of this paragraph for the affected source.

(c) The compliance schedules for the sources identified below are approved as revisions to the plan pursuant to § 51.104 and subpart N of this chapter. All regulations cited are air pollution control regulations of the State, unless otherwise noted.

IOWA

Source	Location	Regulation involved	Date adopted	Variance expiration date	Final compliance date
Iowa Army Ammunition Plant (explosive contaminated waste burning).	Middletown, Iowa.	400—4.2(1)	June 14, 1979	Feb. 28, 1982 ..	Feb. 1982.
Progressive Foundry, Inc., cupola and casting shakeout area.	Perry	400–4.6	Nov. 6, 1981 ...	.....	Sept. 1, 1983.

NOTE 1: Linn County Health Department does not issue variances if source(s) is on an approvable compliance schedule.
NOTE 2: Polk County Department of Health does not issue variances if source(s) is on an accepted and approved compliance schedule.
NOTE 3: City of Des Moines, Department of Public Health does not issue variances if source(s) is on an accepted and approved compliance schedule.

[37 FR 10865, May 31, 1972]

EDITORIAL NOTE: For FEDERAL REGISTER citations affecting § 52.825, see the List of CFR Sections Affected, which appears in the Finding Aids section of the printed volume and at *www.fdsys.gov*.

§§ 52.826–52.827 [Reserved]

§ 52.828 Enforcement.

(a) Sections 23(1)(b) and 13(7) of Senate File 85, Division II for Iowa are disapproved insofar as they permit the Air Quality Commission of the Iowa Department of Environmental Quality to issue abatement orders (1) that defer compliance with plan requirements beyond the dates required for attainment of the national standards, (2) without the approval of the Administrator, and (3) for reasons not permitted by the Clean Air Act.

(b) Regulation limiting administrative abatement orders:

(1) No order deferring compliance with a requirement of the Iowa Implementation Plan shall be issued by the Air Quality Commission of the Iowa Department of Environmental Quality which does not meet the following requirements:

(i) An order must require compliance with the plan requirement within the times and under the conditions specified in § 51.261 (a) and (b) of this chapter.

(ii) An order may not defer compliance beyond the last date permitted by section 110 of the Act for attainment of the national standard which the plan implements unless the procedures and conditions set forth in section 110(f) of the Act are met.

(iii) An order shall not be effective until it has been submitted to and approved by the Administrator in accordance with §§ 51.104, 51.105, 51.261 and 51.262(a).

(2) Notwithstanding the limitations of paragraph (b)(1)(ii) of this section,

an order may be granted which provides for compliance beyond the statutory attainment date for a national standard where compliance is not possible because of breakdowns or malfunctions of equipment, acts of God, or other unavoidable occurrences. However, such order may not defer compliance for more than three (3) months unless the procedures and conditions set forth in section 110(f) of the Act are met.

[38 FR 30877, Nov. 8, 1973, as amended at 51 FR 40675, 40676, 40677, Nov. 7, 1986; 52 FR 24367, June 30, 1987]

§§ 52.829–52.832 [Reserved]

§ 52.833 Significant deterioration of air quality.

(a) The requirements of sections 160 through 165 of the Clean Air Act are met, except for sources seeking permits to locate on Indian lands in the state of Iowa; and certain sources affected by the stack height rules described in a letter from Iowa dated April 22, 1987.

(b) Regulations for preventing significant deterioration of air quality. The provisions of § 52.21 except paragraph (a)(1) are hereby incorporated and made a part of the applicable State plan for the State of Iowa for sources wishing to locate on Indian lands; and certain sources as identified in Iowa's April 22, 1987, letter.

[71 FR 16053, Mar. 30, 2006]

§ 52.834 Control strategy: Sulfur dioxide.

Approval—On April 21, 1997, the Iowa Department of Natural Resources (IDNR) submitted a maintenance plan and redesignation request for the Muscatine County nonattainment area. The maintenance plan and redesignation request satisfy all applicable requirements of the Clean Air Act.

[63 FR 13345, Mar. 19, 1998]

§ 52.840 Interstate pollutant transport provisions; What are the FIP requirements for decreases in emissions of nitrogen oxides?

(a)(1) The owner and operator of each source and each unit located in the State of Iowa and Indian country within the borders of the State and for which requirements are set forth under the CSAPR NO_X Annual Trading Program in subpart AAAAA of part 97 of this chapter must comply with such requirements. The obligation to comply with such requirements with regard to sources and units in the State will be eliminated by the promulgation of an approval by the Administrator of a revision to Iowa's State Implementation Plan (SIP) as correcting the SIP's deficiency that is the basis for the CSAPR Federal Implementation Plan under § 52.38(a) for those sources and units, except to the extent the Administrator's approval is partial or conditional. The obligation to comply with such requirements with regard to sources and units located in Indian country within the borders of the State will not be eliminated by the promulgation of an approval by the Administrator of a revision to Iowa's SIP.

(2) Notwithstanding the provisions of paragraph (a)(1) of this section, if, at the time of the approval of Iowa's SIP revision described in paragraph (a)(1) of this section, the Administrator has already started recording any allocations of CSAPR NO_X Annual allowances under subpart AAAAA of part 97 of this chapter to units in the State for a control period in any year, the provisions of subpart AAAAA of part 97 of this chapter authorizing the Administrator to complete the allocation and recordation of CSAPR NO_X Annual allowances to units in the State for each such control period shall continue to apply, unless provided otherwise by such approval of the State's SIP revision.

(b)(1) The owner and operator of each source and each unit located in the State of Iowa and Indian country within the borders of the State and for which requirements are set forth under the CSAPR NO_X Ozone Season Group 1 Trading Program in subpart BBBBB of part 97 of this chapter must comply with such requirements with regard to emissions occurring in 2015 and 2016.

(2) The owner and operator of each source and each unit located in the State of Iowa and Indian country within the borders of the State and for which requirements are set forth under the CSAPR NO_X Ozone Season Group 2 Trading Program in subpart EEEEE of part 97 of this chapter must comply

with such requirements with regard to emissions occurring in 2017 and each subsequent year. The obligation to comply with such requirements with regard to sources and units in the State will be eliminated by the promulgation of an approval by the Administrator of a revision to Iowa's State Implementation Plan (SIP) as correcting the SIP's deficiency that is the basis for the CSAPR Federal Implementation Plan (FIP) under § 52.38(b) for those sources and units, except to the extent the Administrator's approval is partial or conditional, provided that because the CSAPR FIP was promulgated as a partial rather than full remedy for an obligation of the State to address interstate air pollution, the SIP revision likewise will constitute a partial rather than full remedy for the State's obligation unless provided otherwise in the Administrator's approval of the SIP revision. The obligation to comply with such requirements with regard to sources and units located in Indian country within the borders of the State will not be eliminated by the promulgation of an approval by the Administrator of a revision to Iowa's SIP.

(3) Notwithstanding the provisions of paragraph (b)(2) of this section, if, at the time of the approval of Iowa's SIP revision described in paragraph (b)(2) of this section, the Administrator has already started recording any allocations of CSAPR NO_X Ozone Season Group 2 allowances under subpart EEEEE of part 97 of this chapter to units in the State for a control period in any year, the provisions of subpart EEEEE of part 97 of this chapter authorizing the Administrator to complete the allocation and recordation of CSAPR NO_X Ozone Season Group 2 allowances to units in the State for each such control period shall continue to apply, unless provided otherwise by such approval of the State's SIP revision.

[76 FR 48364, Aug. 8, 2011, as amended at 76 FR 80774, Dec. 27, 2011; 81 FR 74586 and 74595, Oct. 26, 2016]

§ 52.841 Interstate pollutant transport provisions; What are the FIP requirements for decreases in emissions of sulfur dioxide?

(a) The owner and operator of each source and each unit located in the State of Iowa and Indian country within the borders of the State and for which requirements are set forth under the CSAPR SO_2 Group 1 Trading Program in subpart CCCCC of part 97 of this chapter must comply with such requirements. The obligation to comply with such requirements with regard to sources and units in the State will be eliminated by the promulgation of an approval by the Administrator of a revision to Iowa's State Implementation Plan (SIP) as correcting the SIP's deficiency that is the basis for the CSAPR Federal Implementation Plan under § 52.39 for those sources and units, except to the extent the Administrator's approval is partial or conditional. The obligation to comply with such requirements with regard to sources and units located in Indian country within the borders of the State will not be eliminated by the promulgation of an approval by the Administrator of a revision to Iowa's SIP.

(b) Notwithstanding the provisions of paragraph (a) of this section, if, at the time of the approval of Iowa's SIP revision described in paragraph (a) of this section, the Administrator has already started recording any allocations of CSAPR SO_2 Group 1 allowances under subpart CCCCC of part 97 of this chapter to units in the State for a control period in any year, the provisions of subpart CCCCC of part 97 of this chapter authorizing the Administrator to complete the allocation and recordation of CSAPR SO_2 Group 1 allowances to units in the State for each such control period shall continue to apply, unless provided otherwise by such approval of the State's SIP revision.

[76 FR 48365, Aug. 8, 2011, as amended at 81 FR 74586 and 74595, Oct. 26, 2016]

§ 52.842 Visibility protection.

(a) *Regional Haze*. The requirements of section 169A of the Clean Air Act are not met because the regional haze plan submitted by Iowa on March 25, 2008, does not include fully approvable measures for meeting the requirements of 40

CFR 51.308(d)(3) and 51.308(e) with respect to emissions of NO_X and SO_2 from electric generating units. EPA has given limited approval and limited disapproval to the plan provisions addressing these requirements.

(b) *Measures Addressing Limited Disapproval Associated with NO_X*. The deficiencies associated with NO_X identified in EPA's limited disapproval of the regional haze plan submitted by Iowa on March 25, 2008, are satisfied by § 52.840.

(c) *Measures Addressing Limited Disapproval Associated with SO_2*. The deficiencies associated with SO_2 identified in EPA's limited disapproval of the regional haze plan submitted by Iowa on March 25, 2008, are satisfied by § 52.841.

[77 FR 33657, June 7, 2012, as amended at 77 FR 38007, June 26, 2012]

Subpart R—Kansas

§ 52.869 [Reserved]

§ 52.870 Identification of plan.

(a) *Purpose and scope*. This section sets forth the applicable SIP for Kansas under Section 110 of the CAA, 42 U.S.C. 7401 *et seq*. and 40 CFR Part 51 to meet NAAQS.

(b) *Incorporation by reference*. (1) Material listed in paragraphs (c) and (d) of this section with an EPA approval date prior to December 31, 2014, was approved for incorporation by reference by the Director of the Federal Register in accordance with 5 U.S.C. 552(a) and 1 CFR part 51. Material is incorporated as it exists on the date of the approval, and notice of any change in the material will be published in the FEDERAL REGISTER. Entries in paragraphs (c) and (d) of this section with EPA approval dates after December 31, 2014, will be incorporated by reference in the next update to the SIP compilation.

(2) EPA Region 7 certifies that the rules/regulations provided by EPA in the SIP compilation at the addresses in paragraph (b)(3) of this section are an exact duplicate of the officially promulgated state rules/regulations which have been approved as part of the SIP as of December 31, 2014.

(3) Copies of the materials incorporated by reference may be inspected at the Environmental Protection Agency, Region 7, Air Planning and Development Branch, 11201 Renner Boulevard, Lenexa, Kansas 66219; at the EPA, Air and Radiation Docket and Information Center, and the National Archives and Records Administration (NARA). If you wish to obtain material from the EPA Regional Office, please call (913) 551–7089. For information on the availability of this material at NARA, call (202) 741–6030, or go to: *www.archives.gov/federal-register/cfr/ibr-locations.html*.

(c) *EPA-approved regulations*.

EPA-APPROVED KANSAS REGULATIONS

Kansas citation	Title	State effective date	EPA approval date	Explanation
Kansas Department of Health and Environment Ambient Air Quality Standards and Air Pollution Control				
General Regulations				
K.A.R. 28–19–6	Statement of Policy	1/1/72	5/31/72, 37 FR 10867	Kansas revoked this rule 5/1/82.
K.A.R. 28–19–8	Reporting Required	1/23/95	7/17/95, 60 FR 36361.	
K.A.R. 28–19–9	Time Schedule for Compliance.	5/1/84	12/21/87, 52 FR 48265.	
K.A.R. 28–19–10	Circumvention of Control Regulations.	1/1/71	5/31/72, 37 FR 10867.	
K.A.R. 28–19–11	Exceptions Due to Breakdowns or Scheduled Maintenance.	1/1/74	11/8/73, 38 FR 30876.	
K.A.R. 28–19–12	Measurement of Emissions	1/1/71	5/31/72, 37 FR 10867.	
K.A.R. 28–19–13	Interference with Enjoyment of Life and Property.	1/1/74	11/8/73, 38 FR 30876.	
K.A.R. 28–19–14	Permits Required	1/24/94	7/17/95, 60 FR 36361.	
K.A.R. 28–19–15	Severability	1/1/71	5/31/72, 37 FR 10867.	

EPA-APPROVED KANSAS REGULATIONS—Continued

Kansas citation	Title	State effective date	EPA approval date	Explanation
Nonattainment Area Requirements				
K.A.R. 28–19–16	New Source Permit Requirements for Designated Nonattainment Areas.	10/16/89	1/16/90, 55 FR 1420.	
K.A.R. 28–19–16a	Definitions	10/10/97	1/11/00, 65 FR 1545.	
K.A.R. 28–19–16b	Permit Required	10/16/89	1/16/90, 55 FR 1420.	
K.A.R. 28–19–16c	Creditable Emission Reductions.	10/16/89	1/16/90, 55 FR 1420	EPA deferred action on the state's current definition of the terms ''building, structure, facility, or installation''; ''installation''; and ''reconstruction.''
K.A.R. 28–19–16d	Fugitive Emission Exemption.	10/16/89	1/16/90, 55 FR 1420.	
K.A.R. 28–19–16e	Relaxation of Existing Emission Limitations.	10/16/89	1/16/90, 55 FR 1420.	
K.A.R. 28–19–16f	New Source Emission Limits.	10/16/89	1/16/90, 55 FR 1420.	
K.A.R. 28–19–16g	Attainment and Maintenance of National Ambient Air Quality Standards.	10/16/89	1/16/90, 55 FR 1420.	
K.A.R. 28–19–16h	Compliance of Other Sources.	10/16/89	1/16/90, 55 FR 1420.	
K.A.R. 28–19–16i	Operating Requirements	10/16/89	1/16/90 55 FR 1420.	
K.A.R. 28–19–16j	Revocation and Suspension of Permit.	10/16/89	1/16/90, 55 FR 1420.	
K.A.R. 28–19–16k	Notification Requirements	10/16/89	1/16/90, 55 FR 1420.	
K.A.R. 28–19–16l	Failure to Construct	10/16/89	1/16/90, 55 FR 1420.	
K.A.R. 28–19–16m	Compliance with Provisions of Law Required.	10/16/89	1/16/90, 55 FR 1420.	
Attainment Area Requirements				
K.A.R. 28–19–17	Prevention of Significant Deterioration of Air Quality.	11/22/02	2/26/03, 68 FR 8845	K.A.R. 28–19–17a through 28–19–17q revoked. Provision moved to K.A.R. 28–19–350.
Stack Height Requirements				
K.A.R. 28–19–18	Stack Heights	5/1/88	4/20/89, 54 FR 15934	The state regulation has stack height credit. EPA has not approved that part.
K.A.R. 28–19–18b	Definitions	5/1/88	4/20/89, 54 FR 15934.	
K.A.R. 28–19–18c	Methods for Determining Good Engineering Practice Stack Height.	5/1/88	4/20/89, 54 FR 15934.	
K.A.R. 28–19–18d	Fluid Modeling	5/1/88	4/20/89, 54 FR 15934.	
K.A.R. 28–19–18e	Relaxation of Existing Emission Limitations.	5/1/88	4/20/89, 54 FR 15934.	
K.A.R. 28–19–18f	Notification Requirements	5/1/88	4/20/89, 54 FR 15934.	
Continuous Emission Monitoring				
K.A.R. 28–19–19	Continuous Emission Monitoring.	6/8/92	1/12/93, 58 FR 3847.	
Processing Operation Emissions				
K.A.R. 28–19–20	Particulate Matter Emission Limitations.	10/16/89	1/16/90, 55 FR 1420.	
K.A.R. 28–19–21	Additional Emission Restrictions.	10/16/89	1/16/90, 55 FR 1420.	
K.A.R. 28–19–23	Hydrocarbon Emissions—Stationary Sources.	12/27/72	11/8/73, 38 FR 30876.	
K.A.R. 28–19–24	Control of Carbon Monoxide Emissions..	1/1/72	11/8/73, 38 FR 30876.	

EPA-APPROVED KANSAS REGULATIONS—Continued

Kansas citation	Title	State effective date	EPA approval date	Explanation
Indirect Heating Equipment Emissions				
K.A.R. 28–19–30	General Provisions	1/1/72	5/31/72, 37 FR 10867.	
K.A.R. 28–19–31	Emission Limitations	11/8/93	10/18/94, 59 FR 52425.	
K.A.R. 28–19–32	Exemptions—Indirect Heating Equipment.	11/8/93	10/18/94, 59 FR 52425.	
Incinerator Emissions				
K.A.R. 28–19–40	General Provisions	1/1/71	5/31/72, 37 FR 10867.	
K.A.R. 28–19–41	Restriction of Emission	12/27/72	11/8/73, 38 FR 30876.	
K.A.R. 28–19–42	Performance Testing	1/1/72	11/8/73, 38 FR 30876.	
K.A.R. 28–19–43	Exceptions	1/1/71	5/31/72, 37 FR 10867.	
Air Pollution Emergencies				
K.A.R. 28–19–55	General Provisions	1/1/72	5/31/72, 37 FR 10867.	
K.A.R. 28–19–56	Episode Criteria	10/16/89	1/16/90, 55 FR 1420.	
K.A.R. 28–19–57	Emission Reduction Requirements.	1/1/72	5/31/72, 37 FR 10867.	
K.A.R. 28–19–58	Emergency Episode Plans	1/1/72	5/31/72, 37 FR 10867.	
Volatile Organic Compound Emissions				
K.A.R. 28–19–61	Definitions	10/7/91	6/23/92, 57 FR 27936.	
K.A.R. 28–19–62	Testing Procedures	10/7/71	6/23/92, 57 FR 27936.	
K.A.R. 28–19–63	Automobile and Light Duty Truck Surface Coating.	11/8/93	10/18/94, 59 FR 52425.	
K.A.R. 28–19–64	Bulk Gasoline Terminals	5/1/88	5/18/88, 53 FR 17700.	
K.A.R. 28–19–65	Volatile Organic Compounds (VOC) Liquid Storage in Permanent Fixed Roof Type Tanks.	5/1/88	5/18/88, 53 FR 17700.	
K.A.R. 28–19–66	Volatile Organic Compounds (VOC) Liquid Storage in External Floating Roof Tanks.	5/1/88	5/18/88, 53 FR 17700.	
K.A.R. 28–19–67	Petroleum Refineries	5/1/86	1/2/87, 52 FR 53.	
K.A.R. 28–19–68	Leaks from Petroleum Refinery Equipment.	5/1/86	1/2/87, 52 FR 53.	
K.A.R. 28–19–69	Cutback Asphalt	5/1/88	5/18/88, 53 FR 17700.	
K.A.R. 28–19–70	Leaks from Gasoline Delivery Vessels and Vapor Collection Systems.	5/15/98	1/11/00, 65 FR 1545.	
K.A.R. 28–19–71	Printing Operations	5/1/88	5/18/88, 53 FR 17700.	
K.A.R. 28–19–72	Gasoline Dispensing Facilities.	5/1/88	5/18/88, 53 FR 17700.	
K.A.R. 28-19-73	Surface Coating of Miscellaneous Metal Parts and Products and Metal Furniture.	6/8/92	1/12/93, 58 FR 3847.	
K.A.R. 28–19–74	Wool Fiberglass Manufacturing.	5/1/88	5/18/88, 53 FR 17700.	
K.A.R. 28–19–76	Lithography Printing Operations.	10/7/91	6/23/92, 57 FR 27936.	
K.A.R. 28–19–77	Chemical Processing Facilities That Operate Alcohol Plants or Liquid Detergent Plants.	10/7/91	6/23/92, 57 FR 27936.	
General Provisions				
K.A.R. 28–19–200	General Provisions; definitions.	1/2/11	2/22/11, 76 FR 9658.	
K.A.R. 28–19–201	General Provisions; Regulated Compounds List.	10/10/97	1/11/00, 65 FR 1545.	
K.A.R. 28–19–204	Permit Issuance and Modification; Public Participation.	1/23/95	7/17/95, 60 FR 36361.	

EPA-APPROVED KANSAS REGULATIONS—Continued

Kansas citation	Title	State effective date	EPA approval date	Explanation
K.A.R. 28–19–210	Calculation of Actual Emissions.	11/22/93	1/11/00, 65 FR 1545.	
K.A.R. 28–19–212	Approved Test Methods and Emission Compliance Determination Procedures.	1/23/95	7/17/95, 60 FR 36361.	
K.A.R. 28–19–274	Nitrogen Oxide allocations	11/6/15	6/29/16 and 81 FR 42256.	Approval of EGU-specific NO_X allocations does not include KAR 28–19–274(a)(2)(A) and (a)(2)(B).
Construction Permits And Approvals				
K.A.R. 28–19–300	Applicability	1/23/95	7/17/95, 60 FR 36361.	
K.A.R. 28–19–301	Application and Issuance	1/23/95	7/17/95, 60 FR 36361.	
K.A.R. 28–19–302	Additional Provisions; Construction Permits.	1/23/95	7/17/95, 60 FR 36361.	
K.A.R. 28–19–303	Additional Provisions; Construction Approvals.	1/23/95	7/17/95, 60 FR 36361.	
K.A.R. 28–19–304	Fees	1/23/95	7/17/95, 60 FR 36361.	
K.A.R. 28–19–350	Prevention of Significant Deterioration (PSD) of Air Quality.	12/28/12	6/20/13, 78 FR 37126	Provisions of the 2010 $PM_{2.5}$ PSD-Increments, SILs and SMCs rule (75 FR 64865, October 20, 2010) relating to SILs and SMCs that were affected by the January 22, 2013, U.S. Court of Appeals decision are not SIP approved. Provisions of the 2002 NSR reform rule relating to the Clean Unit Exemption, Pollution Control Projects, and exemption from record-keeping provisions for certain sources using the actual-to-projected-actual emissions projections test are not SIP approved. In addition, we have not approved Kansas rule incorporating EPA's 2007 revision of the definition of "chemical processing plants" (the "Ethanol Rule," 72 FR 24060 (May 1, 2007) or EPA's 2008 "fugitive emissions rule," 73 FR 77882 (December 19, 2008).
General Permits				
K.A.R. 28–19–400	General Requirements	1/23/95	7/17/95, 60 FR 36361.	
K.A.R. 28–19–401	Adoption by the Secretary	1/23/95	7/17/95, 60 FR 36361.	
K.A.R. 28–19–402	Availability of Copies; Lists of Sources to Which Permits Issued.	1/23/95	7/17/95, 60 FR 36361.	
K.A.R. 28–19–403	Application to Construct or Operate Pursuant to Terms of General Permits.	1/23/95	7/17/95, 60 FR 36361.	
K.A.R. 28–19–404	Modification, Revocation	1/23/95	7/17/95, 60 FR 36361.	
Operating Permits				
K.A.R. 28–19–500	Applicability	1/23/95	7/17/95, 60 FR 36361.	

EPA-APPROVED KANSAS REGULATIONS—Continued

Kansas citation	Title	State effective date	EPA approval date	Explanation
K.A.R. 28–19–501	Emissions Limitations and Pollution Control Equipment for Class I and Class II Operating Permits; Conditions.	1/23/95	7/17/95, 60 FR 36361.	
K.A.R. 28–19–502	Identical Procedural Requirements.	1/23/95	7/17/95, 60 FR 36361.	
Class II Operating Permits				
K.A.R. 28–19–540	Applicability	1/23/95	7/17/95, 60 FR 36361.	
K.A.R. 28–19–541	Application Timetable and Contents.	1/23/95	7/17/95, 60 FR 36361.	
K.A.R. 28–19–542	Permit-by-Rule	9/23/05	2/8/08, 73 FR 7468.	
K.A.R. 28–19–543	Permit Term and Content; Operational Compliance.	1/23/95	7/17/95, 60 FR 36361.	
K.A.R. 28–19–544	Modification of Sources or Operations.	1/23/95	7/17/95, 60 FR 36361.	
K.A.R. 28–19–545	Application Fee	1/23/95	7/17/95, 60 FR 36361.	
K.A.R. 28–19–546	Annual Emission Inventory	9/23/05	2/8/08, 73 FR 7468.	
K.A.R. 28–19–561	Permit-by-Rule; Reciprocating Engines.	9/23/05	2/8/08, 73 FR 7468.	
K.A.R. 28–19–562	Permit-by-Rule; Organic Solvent Evaporative Sources.	9/23/05	2/8/08, 73 FR 7468.	
K.A.R. 28–19–563	Permit-by-Rule; Hot Mix Asphalt Facilities.	9/23/05	2/8/08, 73 FR 7468.	
K.A.R. 28–19–564	Permit-by-Rule; Sources with Actual Emissions Less Than 50 Percent of Major Source Thresholds.	10/4/02	3/26/03, 68 FR 14540.	
Open Burning Restrictions				
K.A.R. 28–19–645	Open Burning Prohibited	3/1/96	10/2/96, 61 FR 51366.	
K.A.R. 28–19–646	Responsibility for Open Burning.	3/1/96	10/2/96, 61 FR 51366.	
K.A.R. 28–19–647	Exceptions to Prohibition on Open Burning.	3/1/96	10/2/96, 61 FR 51366.	
K.A.R. 28–19–648	Agricultural Open Burning	3/1/96	10/2/96, 61 FR 51366.	
K.A.R. 28–19–650	Emissions Opacity Limits	1/29/99	12/12/01, 66 FR 64148 (correction). 1/11/00, 65 FR 1545.	
Nitrogen Oxide Emissions				
K.A.R. 28–19–712	Definitions	6/25/10	2/20/13, 78 FR 11751.	
K.A.R. 28–19–712a	Applicability	6/25/10	2/20/13, 78 FR 11751.	
K.A.R. 28–19–712b	General requirement for heavy-duty diesel vehicles.	6/25/10	2/20/13, 78 FR 11751.	
K.A.R. 28–19–712c	General requirement for load and unload locations.	6/25/10	2/20/13, 78 FR 11751.	
K.A.R. 28–19–712d	Exemptions	6/25/10	2/20/13, 78 FR 11751.	
K.A.R. 28–19–713	Applicability	6/25/10	2/20/13, 78 FR 11751.	
K.A.R. 28–19–713a	Emission limitation requirements.	6/25/10	2/20/13, 78 FR 11751.	
K.A.R. 28–19–713b	Alternate emissions limit	6/25/10	2/20/13, 78 FR 11751.	
K.A.R. 28–19–713c	Control measures and equipment.	6/25/10	2/20/13, 78 FR 11751.	
K.A.R. 28–19–713d	Compliance demonstration, monitoring, and reporting requirements.	6/25/10	2/20/13, 78 FR 11751.	
Volatile Organic Compound Emissions				
K.A.R. 28–19–714	Control of Emissions from Solvent Metal Cleaning.	9/1/02	10/30/02, 67 FR 66058.	

EPA-APPROVED KANSAS REGULATIONS—Continued

Kansas citation	Title	State effective date	EPA approval date	Explanation
K.A.R. 28–19–717	Control of Volatile Organic Compound (VOC) Emissions from Commercial Bakery Ovens in Johnson and Wyandotte Counties.	12/22/00	12/12/01, 66 FR 64148.	
K.A.R. 28–19–719	Fuel Volatility	4/27/01	2/13/02, 67 FR 6655.	
Conformity				
K.A.R. 28–19–800	General Conformity of Federal Actions.	3/15/96	10/2/96, 61 FR 51366.	

(d) *EPA-approved State source-specific permits.*

EPA-APPROVED KANSAS SOURCE-SPECIFIC PERMITS

Name of source	Permit or case No.	State effective date	EPA approval date	Explanation
(1) Board of Public Utilities, Quindaro Power Station.	2090048	10/20/93	10/18/94, 59 FR 52425.	
(2) Board of Public Utilities, Kaw Power Station.	2090049	10/20/93	10/18/94, 59 FR 52425.	
(3) Kansas City Power and Light Company.		12/5/07	12/27/11, 76 FR 80754	Certain provisions withdrawn from plan as identified in letter dated 12/1/11 from Kansas.
(4) Westar Energy, Inc.		2/29/08	12/27/11, 76 FR 80759	Certain provisions withdrawn from plan as identified in letter dated 12/1/11 from Kansas.
(5) Exide Technologies	1690035	8/18/14	7/20/16, 81 FR 47034	

(e) *EPA-approved nonregulatory provisions and quasi-regulatory measures.*

EPA-APPROVED KANSAS NONREGULATORY PROVISIONS

Name of nonregulatory SIP provision	Applicable geographic or nonattainment area	State submittal date	EPA approval date	Explanation
(1) Implementation Plan for Attainment and Maintenance of the National Air Quality Standards.	Statewide	1/31/72	5/31/72, 37 FR 10867.	
(2) Comments on the Plan in Response to EPA Review.	Kansas City	3/24/72	6/22/73, 38 FR 16550	Correction notice published 3/2/76.
(3) Emergency Episode Operations/Communications Manual.	Kansas City	4/6/72	11/8/73, 38 FR 30876	Correction notice published 3/2/76.
(4) Emergency Episode Operations/Communications Manual.	Statewide except Kansas City.	2/15/73	11/8/73, 38 FR 30876	Correction notice published 3/2/76.
(5) Letter Concerning Attainment of CO Standards.	Kansas City	5/29/73	11/8/73, 38 FR 30876	Correction notice published 3/2/76.
(6) Amendment to State Air Quality Control Law Dealing with Public Access to Emissions Data.	Statewide	7/27/73	11/8/73, 38 FR 30876	Correction notice published 3/2/76.

EPA-APPROVED KANSAS NONREGULATORY PROVISIONS—Continued

Name of nonregulatory SIP provision	Applicable geographic or nonattainment area	State submittal date	EPA approval date	Explanation
(7) Analysis and Recommendations Concerning Designation of Air Quality Maintenance Areas.	Statewide	2/28/74	3/2/76, 41 FR 8956	[FRL 484–4].
(8) Ozone Nonattainment Plan.	Kansas City	9/17/79	4/3/81, 46 FR 20164	[A–7–FRL 1788–5].
(9) Ozone Nonattainment Plan.	Douglas County	10/22/79	4/3/81, 46 FR 20164	[A–7–FRL 1788–5].
(10) TSP Nonattainment Plan.	Kansas City	3/10/80	4/3/81, 46 FR 20164	[A–7–FRL 1788–5].
(11) Lead Plan	Statewide	2/17/81	10/22/81, 46 FR 51742	[A–7–FRL–1938–8].
(12) CO Nonattainment Plan.	Wichita	4/16/81	12/15/81, 46 FR 61117	[A–7–FRL–1990–3].
(13) Air Monitoring Plan.	Statewide	10/16/81	1/22/82, 47 FR 3112	[A–7–FRL–2024–8].
(14) Letter and Supporting Documentation Relating to Reasonably Available Control Technology for Certain Particulate Matter Sources.	Kansas City	9/15/81	6/18/82, 47 FR 26387	[EPA Action KS 276; FRL 2137–6]. Correction notice published 1/12/84.
(15) Letter Agreeing to Follow EPA Interim Stack Height Policy for Each PSD Permit Issued Until EPA Revises the Stack Height Regulations.	Statewide	6/20/84	12/11/84, 49 FR 48185	[A–7–FRL–2734–4; EPA No 1163].
(16) Letters Pertaining to Permit Fees.	Statewide	3/27/86, 9/15/87.	12/21/87, 52 FR 48265	[FRL 3299–4].
(17) Revisions to the Ozone Attainment Plan.	Kansas City	7/2/86, 4/16/87, 8/18/87, 8/19/87, 1/6/88.	5/18/88, 53 FR 17700	[3375–5].
(18) Revised CO Plan	Wichita	3/1/85, 9/3/87.	10/28/88, 53 FR 43691	[FRL–3449–1].
(19) Letter Pertaining to the Effective Date of Continuous Emission Monitoring Regulations.	Statewide	1/6/88	11/25/88, 53 FR 47690	[FRL–3473–9].
(20) Letters Pertaining to New Source Permit Regulations, Stack Height Regulations, and Stack Height Analysis and Negative Declarations.	Statewide	3/27/86, 12/7/87 1/6/88.	4/20/89, 54 FR 15934	[FRL–3558–5].
(21) PM_{10} Plan	Statewide	10/5/89, 10/16/89.	1/16/90, 55 FR 1420	[FRL–3704–3].
(22) Ozone Maintenance Plan.	Kansas City	10/23/91	6/23/92, 57 FR 27936	[KS1–1–5439; FRL 4126–6].
(23) Letter Pertaining to PSD NO_X Requirements.	Statewide	9/15/92	1/12/93, 58 FR 3847	[KS–2–1–5640; FRL–4552–3].
(24) Small Business Assistance Plan.	Statewide	1/25/94	5/12/94, 59 FR 24644	[KS–3–1–8332; FRL–4882–4].

EPA-APPROVED KANSAS NONREGULATORY PROVISIONS—Continued

Name of nonregulatory SIP provision	Applicable geographic or nonattainment area	State submittal date	EPA approval date	Explanation
(25) Letter Regarding Compliance Verification Methods and Schedules Pertaining to the Board of Public Utilities Power Plants.	Kansas City	12/11/92	10/18/94, 59 FR 52425	[KS–4–1–6508a; FRL–5079–2].
(26) Emissions Inventory Update Including a Motor Vehicle Emissions Budget.	Kansas City	5/11/95	4/25/96, 61 FR 18251	[KS–6–1–6985, MO–31–1–7153; FRL 5448–9].
(27) Air monitoring plan.	Statewide	1/6/02	8/30/02, 67 FR 55726	[KS 162–1162a; FRL–7270–4].
(28) Maintenance Plan for the 1-hour ozone standard in the Kansas portion of the Kansas City maintenance area for the second ten-year period.	Kansas City	1/9/03	1/13/04, 69 FR 1919	[KS 202–1202; FRL–7608–9].
(29) Revision to Maintenance Plan for the 1-hour ozone standard in the Kansas portion of the Kansas City maintenance area for the second ten-year period.	Kansas City	2/10/06	6/26/06, 71 FR 36213	[EPA–R07–OAR–2006–0365; FRL–8188–4].
(30) CAA 110(a)(2)(D)(i) SIP—Interstate Transport.	Statewide	1/7/07	3/9/07, 72 FR 10608	[EPA–R07–OAR–2007–0141; FRL–8286–3].
(31) Maintenance Plan for the 8-hour ozone standard in the Kansas portion of the Kansas City area.	Kansas City	5/23/07	8/9/07, 72 FR 44781	[EPA–R07–OAR–2007–0620; FRL–8450–5] This plan replaces numbers (28) and (29).
(32) Section 110(a)(2) Infrastructure Requirements for the 1997 8-Hour Ozone NAAQS.	Statewide	1/8/08 7/20/09.	7/11/11, 76 FR 40624	[EPA–R07–OAR–2011–0304; FRL–9434–3]. This action addresses the following CAA elements as applicable: 111(a)(2)(A), (B), (C), (D)(ii), (E), (F), (G), (H), (J), (K), (L) and (M).
(33) Regional Haze Plan for the first implementation period.	Statewide	11/9/09	12/27/11, 76 FR 80754	[EPA–R07–OAR–2011–0675; FRL–9611–3]. Certain provisions withdrawn from plan as identified in letter dated 12/1/11 from Kansas.

EPA-APPROVED KANSAS NONREGULATORY PROVISIONS—Continued

Name of nonregulatory SIP provision	Applicable geographic or nonattainment area	State submittal date	EPA approval date	Explanation
(34) Section 110(a)(2) Infrastructure Requirements for the 1997 $PM_{2.5}$ NAAQS.	Statewide	1/08/08	6/20/13, 78 FR 37126	[EPA–R07–OAR–2013–0233; FRL–9825–6]. This action addresses the following CAA elements: 110(a)(2)(A), (B), (C), (D)(i)(II) (prongs 3 and 4), D(ii), (E), (F), (G), (H), (J), (K), (L), and (M), except as noted.
(35) Section 110(a)(2) Infrastructure Requirements for the 2006 $PM_{2.5}$ NAAQS.	Statewide	4/12/10	6/20/13, 78 FR 37126	[EPA–R07–OAR–2013–0233; FRL–9825–6]. This action addresses the following CAA elements: 110(a)(2)(A), (B), (C), (D)(i)(II) (prongs 3 and 4), D(ii), (E), (F), (G), (H), (J), (K), (L) and (M), except as noted.
(36) Section 128 Declaration: Kansas Department of Health and Environment Representation and Conflicts of Interest Provisions, Kansas Revised Statutes (KSA). KSA 46–221, KSA 46–229, KSA 46–247(c).	Statewide	3/19/13	6/20/13, 78 FR 37126	[EPA–R07–OAR–2013–0233; FRL–9825–6].
(37) Section 110(a)(2) infrastructure Requirements for the 2008 Pb NAAQS.	Statewide	1/13/12	9/15/14, 79 FR 54908	[EPA–R07–OAR–2014–0271; FRL–9916–50–Region 7]. This action addresses the following CAA elements: 110(a)(2)(A), (B), (C), (D), (E), (F), (G), (H), (J), (K), (L) and (M).
(38) Section 110(a)(2) Infrastructure Requirements for the 2008 O_3 NAAQS.	Statewide	3/19/13	10/21/14, 79 FR 62861	[EPA–R07–OAR–2014–0401; FRL–9918–19–Region 7]. This action addresses the following CAA elements: 110(a)(2)(A), (B), (C), (D)(i)(II) (prongs 3 and 4), (D)(ii), (E), (F), (G), (H), (J), (K), (L) and (M) except as noted.

EPA-APPROVED KANSAS NONREGULATORY PROVISIONS—Continued

Name of nonregulatory SIP provision	Applicable geographic or nonattainment area	State submittal date	EPA approval date	Explanation
(39) Section 110(a)(2) Infrastructure Requirements for the 2010 NO_2 NAAQS.	Statewide	3/19/13	10/22/14, 79 FR 63044	[EPA–R07–OAR–2014–0500; FRL–9918–11–Region 7]. This action addresses the following CAA elements: 110 (a)(2)(A), (B), (C), (D), (E), (F), (G), (H), (J), (K), (L) and (M).
(40) Cross State Air Pollution Rule—State-Determined Allowance Allocations for the 2016 control periods.	Statewide	3/30/15	8/21/2015, 80 FR 50789.	
(41) Section 110(a)(2) Infrastructure Requirements for the 2008 O_3 NAAQS.	Statewide	3/19/2013	8/27/2015, 80 FR 51955	This action addresses the visibility protection portion of section 110(a)(2)(J) of the CAA.
(42) State Implementation Plan (SIP) Revision for the Attainment and Maintenance of National Ambient Air Quality Standards for Regional Haze (2014 Five-Year Progress Report).	Statewide	3/10/15	9/14/15, 80 FR 55030.	
(43) Attainment plan for 2008 lead NAAQS.	Salina	2/3/15	7/20/16, 81 FR 47034	[EPA–R07–OAR–2015–0708; 9949–13–Region 7].
(44) Section 110(a)(2) Infrastructure Requirements for the 2012 $PM_{2.5}$ NAAQS.	Statewide	11/16/15	9/9/16, 81 FR 62373	This action addresses the following CAA elements: 110(a)(2)(A), (B), (C), (D), (E), (F), (G), (H), (J), (K), (L), and (M). 110(a)(2)(I) is not applicable. [EPA–R07–OAR–2016–0313; FRL–]

[64 FR 7098, Feb. 12, 1999]

EDITORIAL NOTE: For FEDERAL REGISTER citations affecting § 52.870, see the List of CFR Sections Affected, which appears in the Finding Aids section of the printed volume and at *www.fdsys.gov*.

§ 52.871 Classification of regions.

The Kansas plan was evaluated on the basis of the following classifications:

Air quality control region	Pollutant				
	Particulate matter	Sulfur oxides	Nitrogen dioxide	Carbon monoxide	Photochemical oxidants (hydrocarbons)
Metropolitan Kansas City Interstate	I	III	III	I	I
South Central Kansas Intrastate	I	III	III	III	I
Northeast Kansas Intrastate	I	III	III	III	III
Southeast Kansas Intrastate	III	III	III	III	III
North Central Kansas Intrastate	I	III	III	III	III

Air quality control region	Pollutant				
	Particulate matter	Sulfur oxides	Nitrogen dioxide	Carbon monoxide	Photochemical oxidants (hydrocarbons)
Northwest Kansas Intrastate	I	III	III	III	III
Southwest Kansas Intrastate	I	III	III	III	III

[37 FR 10867, May 31, 1972]

§ 52.872 Operating permits.

Emission limitations and related provisions which are established in Kansas operating permits as Federally enforceable conditions shall be enforceable by EPA. EPA reserves the right to deem permit conditions not Federally enforceable. Such a determination will be made according to appropriate procedures and be based upon the permit, permit approval procedures, or permit requirements which do not conform with the operating permit program requirements or the requirements of EPA underlying regulations.

[60 FR 36364, July 17, 1995]

§ 52.873 Approval status.

(a) The Kansas portion of the Kansas City metropolitan area was designated as nonattainment for ozone in 40 CFR part 81. Therefore, the Administrator approves continuation of the 7.8 RVP limit as federally enforceable in the Kansas City metropolitan area, even after the area is redesignated to attainment, because of its nonattainment designation effective January 6, 1992. Also, the requirement for 7.8 psi RVP volatility is deemed necessary to ensure attainment and maintenance of the ozone standard as demonstrated by the emissions inventory projections (based on use of 7.8 psi RVP) in Kansas' ozone maintenance plan for the Kansas City metropolitan area.

(b) [Reserved]

(c) The Administrator approves Rule K.A.R. 28–19–31 as identified at § 52.870(c)(29), with the understanding that any alternative compliance plans issued under this rule must be approved by EPA as individual SIP revisions.

[37 FR 10867, May 31, 1972, as amended at 46 FR 20170, Apr. 3, 1981; 46 FR 61118, Dec. 15, 1981; 57 FR 27939, June 23, 1992; 59 FR 52427, Oct. 18, 1994; 61 FR 16061, Apr. 11, 1996]

§ 52.874 Legal authority.

(a) The requirements of § 51.230(f) of this chapter are not met since authority to make emission data available to the public is inadequate. Kansas Statutes Annotated 65–3015 would require confidential treatment if the data related to processes or production unique to the owner or would tend to affect adversely the competitive position of the owner.

(b) The requirements of § 51.232(b) of this chapter are not met since the following deficiencies exist in the local agency legal authority:

(1) *Kansas City, Kans.-Wyandotte County Health Department.* (i) Authority to make emission data available to the public is inadequate because the Kansas Statutes Annotated 65–3016 provides a designated local air quality conservation authority with the same authority as the State (§ 51.230(f) of this chapter).

(2) *Topeka-Shawnee County Health Department.* (i) Authority to make emission data available to the public is inadequate because the Kansas Statutes Annotated 65–3016 provides a designated air quality conservation authority with the same authority as the State (§ 51.230(f) of this chapter).

(3) *Wichita-Sedgwick County Health Department.* (i) Authority to make emission data available to the public is inadequate because the Kansas Statutes Annotated 65–3016 provides a designated local air quality conservation authority with the same authority as the State (§ 51.230(f) of this chapter).

(c) The requirements of § 51.230(d) of this chapter are not met since statutory authority to prevent construction, modification, or operation of a facility, building, structure, or installation, or combination thereof, which indirectly results or may result in emissions of any air pollutant at any location which will prevent the maintenance of a national air quality standard is not adequate.

[37 FR 10867, May 31, 1972, as amended at 39 FR 7281, Feb. 25, 1974; 51 FR 40676, Nov. 7, 1986]

§ 52.875 Original identification of plan section.

(a) This section identifies the original ''Air Quality Implementation Plan for the State of Kansas'' and all revisions submitted by Kansas that were Federally approved prior to July 1, 1998.

(b) The plan was officially submitted on January 31, 1972.

(c) The plan revisions listed below were submitted on the dates specified.

(1) Various comments on the plan in response to the Regions review were submitted on March 24, 1972, by the State Department of Health. (Non-regulatory)

(2) The Emergency Episode Operations/Communications Manual for the Kansas City Interstate AQCR was submitted on April 6, 1972, by the State Department of Health. (Non-regulatory)

(3) Emergency Episode Operations/Communications Manual for all Kansas Intrastate AQCR's was submitted on February 15, 1973, by the State Department of Health. (Non-regulatory)

(4) Revisions of sections 28–19–6 through 15, 20–24, 30–32, 40–47, 50–52 and 55–58 of the State air pollution control regulations were submitted by the State Department of Health on April 17, 1973.

(5) Letter from the Governor, dated May 29, 1973, concerning the attainment of CO emission standards. (Non-regulatory)

(6) An amendment to the State air quality control law, Senate Bill No. 30, dealing with public access to emission data was submitted on July 27, 1973, by the Governor.

(7) Revisions of sections 28–19–8, 9, 14, 22, 25 and 47 of the State air pollution control regulations were submitted on February 6, 1974, by the Governor.

(8) Copy of the State's analysis and recommendations concerning the designation of Air Quality Maintenance Areas was submitted by letter from the State Department of Health on February 28, 1974. (Non-regulatory)

(9) Kansas submitted State Implementation Plan (SIP) revisions to attain the National Ambient Air Quality Standards on September 17, 1979 for Wyandotte and Johnson Counties, on October 22, 1979 for Douglas County, and on March 10, 1980 for Kansas City of the state designated nonattainment areas under section 107 of the Clean Air Act as amended in 1977. On September 22 and 25, 1980, the state submitted revised regulations on the control of volatile organic compounds and a regulation on the new source permit review program. Included in the plan are the following approved state air pollution control regulations:

(i) The VOC regulations which EPA approved as RACT: 28–19–61 Definitions, 28–19–62 Testing Procedures, 28–19–63 Automobile and Light Duty Trunk Surface Coating, 28–19–65 Petroleum Liquid Storage Tanks, 28–19–66 Petroleum Liquid Storage in External Floating Roof Tanks, 28–19–67 Petroleum Refineries, 28–19–68 Leaks from Petroleum Refinery Equipment, 28–19–69 Cutback Asphalt.

(ii) The New Source Permit Review regulation 28–19–16 through 16m which EPA conditionally approved as meeting the requirements of sections 172(b)(6); 172(b)(11)(A), and 173.

(iii) The Kansas City-Wyandotte County air pollution control regulations which have been adopted by both the Kansas City, Kansas Board of City Commissioners and the Wyandotte County Board of County Commissioners:

2A–1 Jurisdiction, 2A–2 Purpose, 2A–3 Definitions, 2A–4 Powers of the Board, 2A–5 Facts and Circumstances Pertinent to Orders of Joint Board, 2A–6 Right of Entry for Inspection, 2A–7 Time for Compliance Schedule, 2A–8 Variance, 2A–9 Circumvention of Chapter or Regulations, 2A–10 Air Pollution Nuisances Prohibited; Additional Emission Restrictions; Interference with the Enjoyment of Life and Property, 2A–11 Reserved,

2A–12 Confidential Information, 2A–13 Registration and Permit System; Exemptions, 2A–14 Review of New or Altered Sources, 2A–15 Public Hearings, 2A–16 Installations in which Fuel is Burned, 2A–17 Restriction of Emission of Particulate Matter from Industrial Processes, 2A–18 Open Burning Prohibition, 2A–19 Opacity Requirements, 2A–20 Exceptions Due to Breakdowns or Scheduled Maintenance, 2A–21 Preventing Particulate Matter from Becoming Air-Borne, 2A–22 Measurement of Emissions, 2A–23 Restriction of Emission of Odors, 2A–24 Sulfur Compound Emissions, 2A–24.1 Hydrocarbon Emissions; Stationary Sources, 2A–25 Control of Carbon Monoxide Emissions, 2A–26 Control of Nitrogen Oxide Emissions, 2A–26.1 Incinerators, 2A–27 Air Pollution Emergencies—General Provisions, 2A–28 Air Pollution Emergencies—Episode Criteria, 2A–29 Emission Reduction Requirements, 2A–30 Emergency Episode Plans, 2A–31 Penalties for Violation of Chapter or Air Pollution Control Regulations, and 2A–32 Conflict of Ordinances, Effect Partial Invalidity.

(10) The Kansas State Implementation Plan for lead was submitted on February 17, 1981, by the Governor of Kansas, along with a submittal letter which provided additional information concerning the Kansas State Implementation Plan for lead.

(11) Kansas submitted SIP revisions to attain and maintain the National Ambient Air Quality Standards for carbon monoxide on April 16, 1981, for the South Central Kansas Interstate Air Quality Control Region, Wichita nonattainment area. The plan included commitments to complete transportation control measures for the reduction of carbon monoxide from transportation related sources for the attainment of the national standards by December 31, 1982.

(12) A plan revision which makes modifications to the existing Kansas air quality surveillance network was submitted by the Kansas Department of Health and Environment on October 16, 1981.

(13) Additional information to correct two plan deficiencies was submitted by the Kansas Department of Health and Environment on May 12, 1981.

(14) Letter and supporting documents submitted on September 15, 1981, from the Director of Air Quality and Occupational Health relating to reasonably available control technology for certain particulate matter sources in the Kansas City, Kansas area.

(15) New regulations 28–19–70 and 28–19–62 applicable to tank trucks operating at bulk gasoline terminals were submitted by the Kansas Department of Health and Environment on June 15, 1982. State regulation 28–19–51 is revoked. Revised regulations 28–19–16, 28–19–16a, 28–19–16b, 28–19–16c, 28–19–16f, 28–19–16g, 28–19–16h, and 28–19–16i, applicable to new sources in nonattainment areas were included with the June 15, 1982 submittal. Action is deferred on the following regulations: 28–19–16a(d), 28–19–16a(v), 28–19–16, 28–19–16b, 28–19–16c, 28–19–16f, 28–19–16h, 28–19–16i, and 28–19–16a(o). The remainder of the provisions are approved.

(16) New regulations K.A.R. 28–19–17 through K.A.R. 28–19–171 applicable to stationary sources subject to prevention of significant deterioration (PSD) permit requirements were submitted on May 5, 1983. Regulation K.A.R. 28–19–171 pertaining to the use of innovative control technology is not approved. By letter dated June 20, 1984, the State of Kansas agrees to follow the EPA interim stack height policy for each PSD permit issued until such time as EPA revises its general stack height regulations.

(17) Revised regulation K.A.R. 28–19–69, applicable to the use of cutback asphalt, was submitted by the Secretary of the Kansas Department of Health and Environment on February 21, 1986.

(i) *Incorporation by reference.* (A) Revised regulation K.A.R. 28–19–69 as approved by the Kansas Attorney General on December 5, 1985.

(18) Revised regulations K.A.R. 28–19–63 applicable to automobile and light-duty truck surface coating; K.A.R. 28–19–64 applicable to bulk gasoline terminals; K.A.R. 28–19–67 applicable to petroleum refineries; and K.A.R. 28–19–68 applicable to leaks at petroleum refineries, were submitted by the Secretary of the Kansas Department of Health and Environment on February 21, 1986.

(i) *Incorporation by reference.* (A) Revised regulations K.A.R. 28–19–63, K.A.R. 28–19–64, K.A.R. 28–19–67, and K.A.R. 28–19–68 as approved by the Kansas Attorney General on October 30, 1985.

(19) Revised Kansas regulations pertaining to fees for permits to construct and operate were submitted by the Kansas Department of Health and Environment on March 27, 1986.

(i) *Incorporation by reference.* (A) Kansas Administrative Regulations (KAR) 28–19–7, 28–19–8, 28–19–9, 28–19–14, 14(a) and 14(b), 28–19–31, 28–19–45, which became effective on May 1, 1986.

(B) Letter of March 27, 1986 to EPA from the State of Kansas Department of Health and Environment.

(C) Letter of September 15, 1987 to EPA from the State of Kansas Department of Health and Environment.

(20) Revisions to the ozone attainment plan for the Kansas City metropolitan area were submitted by the Governor on July 2, 1986. Pursuant to this plan, revised regulations for the control of volatile organic compound emissions were submitted by the Secretary of the Kansas Department of Health and Environment on January 6, 1988. In numerous instances, the revised Kansas regulations provide for departmental discretion to approve compliance plans and test methods which are alternatives to the EPA reference methods. EPA approves these regulations with the understanding that all such alternative compliance plans and test methods must be submitted to EPA, and approved, as individual SIP revisions. In the absence of such approval, the enforceable requirements of the SIP shall be the emission limits or reduction requirements stated in the regulations. Also, the Kansas regulations contain provisions whereby testing is required when the facility intends to demonstrate compliance by improved operations or new emission controls, yet no test procedures are specified. Examples of such provisions are transfer efficiency (TE) and vapor processing systems. Test methods which are developed by the state must be approved by EPA before facilities may demonstrate compliance through alternative controls and/or TE.

(i) *Incorporation by reference.* (A) Revised regulations K.A.R. 28–19–8, Reporting required; K.A.R. 28–19–61, Definitions; K.A.R. 28–19–62, Testing procedures; K.A.R. 28–19–63, Automobile and light-duty truck surface coating; K.A.R. 28–19–64, Bulk gasoline terminals; K.A.R. 28–19–65, VOC liquid storage in permanent fixed roof type tanks; K.A.R. 28–19–66, VOC liquid storage in external floating roof tanks; K.A.R. 28–19–69, Cutback asphalt; K.A.R. 28–19–70, Leaks from gasoline delivery vessels and vapor collection systems; K.A.R. 28–19–71, Printing operations; K.A.R. 28–19–72, Gasoline dispensing facilities; K.A.R. 28–19–73, Surface coating of miscellaneous metal parts and products and metal furniture; K.A.R. 28–19–74, Wool fiberglass manufacturing; and K.A.R. 28–19–75, Solvent metal cleaning. Temporary versions of these regulations are effective December 16, 1987, through April 30, 1988. The permanent regulations are effective May 1, 1988.

(B) Letter of January 6, 1988, from the Secretary of the Kansas Department of Health and Environment. This letter establishes the effective dates for the revised regulations referenced in subparagraph (20)(i)(A) above.

(ii) *Additional material.* (A) State of Kansas Implementation Plan, Part A—Kansas City Metropolitan Area, Ozone, dated June 1986, submitted by the Governor on July 2, 1986. The plan contains an attainment demonstration, emissions inventories, and a control strategy.

(B) Supplemental information, pursuant to the above referenced plan, was submitted on August 19, 1987.

(C) Negative declarations for certain VOC source categories were submitted on April 16 and August 18, 1987.

(21) Revised Kansas regulations applicable to air quality models and definitions were submitted by the Kansas Department of Health and Environment on January 6, 1988.

(i) *Incorporation by reference.* (A) Kansas Administrative Regulations (K.A.R.) 28–19–17(f) and 28–19–7 (a) through (f) and (h) through (w) which became effective December 16, 1987. EPA is deferring action on 28–19–7(g), *Emission Limitation and Standard.*

(22) On March 1, 1985, the Governor of Kansas submitted a revised carbon monoxide state implementation plan for Wichita, Kansas. On September 3, 1987, the Kansas Department of Health and Environment submitted two new transportation control measures as part of the revised Wichita carbon monoxide control plan.

(i) *Incorporation by reference.* (A) Letter of September 3, 1987, from the Kansas Department of Health and Environment and attached transportation control measures adopted August 18, 1987.

(B) Revision of the Wichita-Sedgwick County Portion of the Kansas State Implementation Plan for Carbon Monoxide submitted by the Governor on March 1, 1985. The plan contains an attainment demonstration, emissions inventory, and a control strategy.

(23) Kansas Administrative Regulations (K.A.R.) 28–19–19(a) through 28–19–19(o) pertaining to continuous emission monitoring at certain stationary sources were submitted on January 6, 1988, by the Kansas Department of Health and Environment. K.A.R. 28–19–19(o) allows for departmental discretion on use of different but equivalent procedures than those specified in 28–19–19(a) through 28–19–19(n). EPA approves this rule with the understanding that all such equivalent procedures and requirements must be submitted to EPA as individual SIP revisions. In the absence of such approval, the enforceable provisions of K.A.R. 28–19–19(a) through 28–19–19(n) shall be applicable.

(i) *Incorporation by reference.* (A) K.A.R. 28–19–19(a) through 28–19–19(o), continuous emission monitoring, as submitted by the Secretary of the Kansas Department of Health and Environment. These regulations became effective on May 1, 1988.

(B) Letter of January 6, 1988, from the Secretary of the Kansas Department of Health and Environment. This letter establishes the effective date for the revised regulations referenced in paragraph (23)(i)(A) of this section.

(24) Revised regulations K.A.R. 28–19–7(g), K.A.R. 28–19–16, and K.A.R. 28–19–17 pertaining to new source permit requirements, were submitted by the Secretary of the Kansas Department of Health and Environment on March 27, 1986. Revised regulation K.A.R. 28–19–18 pertaining to stack heights was submitted by the Secretary of the Kansas Department of Health and Environment on January 6, 1988.

(i) *Incorporation by reference.* (A) Revised regulations, K.A.R. 28–19–16, 28–19–16b, 28–19–16d, 28–19–16g, 28–19–16i, 28–19–161, 28–19–17, 28–19–17a, and 28–19–17b, which became effective on May 1, 1986.

(B) Revised regulations K.A.R. 28–19–7(g), and K.A.R. 28–19–18 through 28–19–18f. The temporary regulations became effective December 16, 1987, and became permanently effective on May 1, 1988.

(ii) *Additional material.* (A) KDHE letter of March 27, 1986, to EPA pertaining to new source permit regulations.

(B) KDHE letter of January 6, 1988, and June 9, 1988, to EPA pertaining to stack height regulations.

(C) KDHE letters of December 7, 1987, and December 23, 1987, pertaining to the state's stack heights analysis and negative declarations.

(25) Revised Kansas Administrative Regulations (K.A.R.) pertaining to PM_{10} regulations and the PM_{10} committal SIP were submitted by Kansas on October 5, 1989.

(i) *Incorporation by reference.* (A) Revised regulations Article 19—Ambient Air Quality Standards and Air Pollution Control, K.A.R. 28–19–7, 28–19–8, 28–19–14, 28–19–16a, 28–19–17a, 28–19–17b, 28–19–17c, 28–19–17g, 28–19–17i, 28–19–20, 28–19–21, and 28–19–56, published August 31, 1989, effective October 16, 1989.

(ii) *Additional material.* (A) Letter of October 5, 1989, from the Secretary of the Kansas Department of Health and Environment (KDHE).

(B) Memorandum of October 16, 1989, from the Secretary of State (Kansas) to Stanley Grant (KDHE).

(C) Revised Air Quality Surveillance Monitoring Plan—Section E.

(26) Revisions to the state implementation plan for the Kansas City metropolitan area were submitted by the Governor on October 23, 1991. Revisions include a maintenance plan which demonstrates continued attainment of the NAAQS for ozone through the year 2002. Rule revisions were also submitted on October 23, 1991.

(i) *Incorporation by reference.* (A) Article 19—Ambient Air Quality Standards and Air Pollution Control, revised Kansas Administrative Regulations (K.A.R.) 28–19–61, Definitions, and K.A.R. 28–19–62, Testing procedures; and new rules K.A.R. 28–19–76, Lithography printing facilities, and K.A.R. 28–19–77, Chemical processing facilities that operate alcohol plants or liquid detergent plants. These rules were published August 22, 1991, and became effective October 7, 1991.

(ii) *Additional material.* (A) State of Kansas Implementation Plan, Kansas City Metropolitan Area Maintenance Provisions, October 1991.

(27) On September 15, 1992, the Secretary of KDHE submitted rule revisions to K.A.R. 28–19–17, the PSD rule; to K.A.R. 28–19–19, the CEM rule; and to K.A.R. 28–19–73, a surface coating rule. These rule revisions were adopted by KDHE on April 3, 1992.

(i) *Incorporation by reference.* (A) Revised regulations K.A.R. 28–19–17 through 28–19–171, K.A.R. 28–19–19 and K.A.R. 28–19–73, and new regulations K.A.R. 28–19–17m through 28–19–17q, effective June 8, 1992.

(ii) *Additional material.* (A) Letter and attachment from KDHE dated September 15, 1992 pertaining to PSD NO_X requirements.

(28) A plan for implementation of the Small Business Stationary Source Technical and Environmental Compliance Assistance Program was submitted by the Kansas Department of Health and Environment as a revision to the Kansas State Implementation Plan (SIP) on January 25, 1994.

(i) *Incorporation by reference.* (A) Kansas SIP, Small Business Stationary Source Technical and Environmental Compliance Assistance Program, dated November 15, 1993.

(29) On May 16, 1994 the Secretary of KDHE submitted revisions to rules K.A.R. 28–19–31, 28–19–32, 28–19–63, and operating permits #20090048 (BPU Quindaro station) and #20090049 (BPU Kaw station).

(i) *Incorporation by reference.* (A) Revised regulations K.A.R. 28–19–31, K.A.R. 28–19–32, K.A.R. 28–19–63, effective November 8, 1993.

(B) Operating permits; Kansas City, Kansas, Board of Public Utilities Quindaro permit #20090048, and Kaw permit #20090049, effective October 20, 1993.

(ii) *Additional material.* (A) Letter from BPU to KDHE dated December 11, 1992, regarding compliance verification methods and schedules.

(30) On February 17, 1995, the Secretary of the Kansas Department of Health and Environment (KDHE) submitted for approval numerous rule revisions which add and revise definitions, revise the Kansas construction permit program, and create a class II operating permit program.

(i) *Incorporation by reference.* (A) Revised rules K.A.R. 28–19–7 effective November 22, 1993; K.A.R. 28–19–8 effective January 23, 1995; K.A.R. 28–19–14 effective January 24, 1994; and the revocation of K.A.R. 28–19–14a effective January 23, 1995; and the revocation of K.A.R. 28–19–14b effective January 24, 1994.

(B) New rules K.A.R. 28–19–204, 212, 300, 301, 302, 303, 304, 400, 401, 402, 403, 404, 500, 501, 502, 540, 541, 542, 543, 544, 545, 546, 561, 562, and 563 effective January 23, 1995.

(31) On May 11, 1995, the Kansas Department of Health and Environment submitted an emissions inventory update to the Kansas City maintenance plan approved by EPA on June 23, 1992. The submittal also establishes a motor vehicle emissions budget for the purpose of fulfilling the requirements of the Federal Transportation Conformity rule.

(i) *Incorporation by reference.* (A) Kansas City Ozone Maintenance State Implementation Plan Revision: Emissions Inventories and Motor Vehicle Emissions Budgets for the Kansas City Metropolitan Area, adopted on May 11, 1995.

(32) A Plan revision was submitted by the Kansas Department of Health and Environment (KDHE) on June 6, 1996, which incorporates by reference the EPA's regulations relating to determining conformity of general Federal actions to State or Federal Implementation Plans, and which revokes old and adopts new open burning regulations.

(i) *Incorporation by reference.* (A) Regulation K.A.R. 28–19–800, adopted by the Secretary of the KDHE on February 21, 1996, effective March 15, 1996.

(B) Regulations K.A.R. 28–19–645 to K.A.R. 28–19–648, adopted by the Secretary of KDHE on February 6, 1996, effective March 1, 1996.

(C) Regulations K.A.R. 28–19–45 to K.A.R. 28–19–47, revoked by the Secretary of KDHE on February 6, 1996, effective March 1, 1996.

(33) A revision to the Kansas SIP was submitted by the Kansas Department of Health and Environment on May 23, 1997, pertaining to fuel volatility.

(i) *Incorporation by reference.* (A) K.A.R. 28–19–79, Fuel Volatility, effective May 2, 1997.

(d) Plan revisions were submitted on April 17, 1974, and February 17, 1974.

[37 FR 10867, May 31, 1972]

EDITORIAL NOTE: For FEDERAL REGISTER citations affecting § 52.875, see the List of CFR Sections Affected, which appears in the Finding Aids section of the printed volume and at *www.fdsys.gov*.

§ 52.876 Compliance schedules.

(a) The requirements of § 51.260 and of § 51.15(a)(2) of this chapter as of September 19, 1976 (40 FR 43216), are not met since the plan does not contain legally enforceable compliance schedules setting forth the dates by which all stationary sources or categories of such sources must be in compliance with applicable portions of the control strategy. Paragraphs C and D of Kansas Regulation 28–19–9 specify that all sources not in compliance must submit an acceptable compliance schedule within 120 days after receiving notification from the State. There are no assurances that all sources will be notified by the State in a timely manner, therefore, paragraphs C and D of Regulation 28–19–9 are disapproved.

(b) *Federal compliance schedule.* (1) Except as provided in paragraph (2) of this paragraph (b), the owner or operator of any stationary source subject to any emission regulation which is part of the approved plan shall be in compliance on or before January 31, 1974.

(i) Any owner or operator in compliance with any such applicable regulation on the effective date of this paragraph shall certify such compliance to the Administrator no later than December 31, 1972.

(ii) Any owner or operator who achieves compliance with any such applicable regulation after the effective date of this paragraph shall certify such compliance to the Administrator within 5 days of the date compliance is achieved.

(2) An owner or operator of a stationary source subject to any emission regulation approved by the Administrator may no later than December 31, 1972, submit to the Administrator for approval a proposed compliance schedule that demonstrates compliance with such regulation as expeditiously as practicable, but no later than July 31, 1975. The compliance schedule shall provide for periodic increments of progress toward compliance. The dates for achievement of such increments shall be specified. Increments of progress shall include, but not be limited to: Letting of necessary contracts for construction or process changes, if applicable; initiation of construction; completion and startup of control systems; performance tests; and submittal of performance test analysis and results.

(3) Any owner or operator who submits a compliance schedule pursuant to this paragraph shall, within 5 days after the deadline for each increment of progress, certify to the Administrator whether or not the required increment of the approved compliance schedule has been met.

(4) Any compliance schedule adopted by the State and approved by the Administrator shall satisfy the requirements of this paragraph for the affected source.

(c) *State compliance schedules.* (1) [Reserved]

(2) The compliance schedules identified below are disapproved as not meeting the requirements of § 51.102 or subpart N of this chapter. All regulations cited are air pollution control regulations of the state, unless otherwise noted.

KANSAS

Source	Location	Regulation involved	Date adopted
Chanute Manufacturing Co., Inc.: sand blasting	Chanute	28–19–50	Dec. 14, 1973.
Kansas City Power & Light, coal transfer houses	LaCygne	28–19–50	Nov. 22, 1974.
Pence Food Center, incinerator	Chanute	28–19–40	Do.
Rodney Milling Co.:			
"A" house gallery and tunnel system	Topeka	28–19–50	Do.
"B" & "C" house gallery	.....do	28–19–50	Do.
Western Alfalfa Corp., alfalfa dehydrator	Deerfield	28–19–20	Do.
Do	Tice	28–19–20	Do.
Pence Food Center, incinerator	Humboldt	28–19–40	Do.

KANSAS—Continued

Source	Location	Regulation involved	Date adopted
Sherwin-Williams Chemicals, Ozark P.M. Mill	Coffeyville	28–19–50B	Oct. 8, 1974.
Continental Grain Co., rail car loading	Hutchinson	28–19–50	Aug. 15, 1974.
Far-Mar-Co, Inc., headhouse cyclones	Topeka	28–19–50	Sept. 5, 1974.
Do	Hutchinson	28–19–50	Aug. 15, 1974.
Western Iron & Foundry, cupola	Wichita	28–19–20A, 28–19–50A.	Oct. 4, 1974.
Kansas Army Ammunition Plant, open burning	Parsons	28–19–45	Jan. 24, 1975.
Reid Grain, headhouse	Goodland	28–19–50	Do.
Sherwin-Williams Chemicals, black ash kiln	Coffeyville	28–19–50A	Do.
Cooperative Farm Chemicals, No. 1 NH_4 $NO_3$99-percent evaporator and prilling tower.	Lawrence	28–19–20	Mar. 28, 1975.
Sherwin-Williams Chemical Co., ozide calciner exhaust	Coffeyville	28–19–50A	Do.
Kaw Dehydrating Co., alfalfa dehydrator	Lawrence	28–19–20	Do.
Empire Dist. Electric Co.: Boilers Nos. 7 and 8	Riverton	28–19–31C	May 23, 1975.
Gulf Oil Chemicals Co.: Coal-fired boiler	Pittsburg	28–19–31	Do.
Kansas City Power & Light: Main boiler	La Cygne	28–19–31B	Do.
Mid-America Dairymen: Spray dryers Nos. 1 and 2	Sabetha	28–19–20	Do.
Tower Metal Products: Reverberatory furnace C	Fort Scott	28–19–50A	Do.
U.S. Steel—Universal Atlas Cement	Independence.		
Clay storage bin		28–19–50A	Do.
Stone storage bin		28–19–50A	Do.
Krupp Ball Mill No. 2		28–19–50A	Do.
Krupp Ball Mill No. 3		28–19–50A	Do.

[37 FR 19809, Sept. 22, 1972]

EDITORIAL NOTE: For FEDERAL REGISTER citations affecting § 52.876, see the List of CFR Sections Affected, which appears in the Finding Aids section of the printed volume and at *www.fdsys.gov*.

§§ 52.877–52.880 [Reserved]

§ 52.881 PM_{10} State implementation plan development in group II areas.

The state has submitted a committal SIP for Kansas City, Kansas. The committal SIP contains all the requirements identified in the July 1, 1987, promulgation of the SIP requirements for PM_{10} at 52 FR 24681, except the state will report the PM_{10} data which exceed the standard within 60 days of the exceedance, rather than 45 days.

[55 FR 1423, Jan. 16, 1990]

§ 52.882 Interstate pollutant transport provisions; What are the FIP requirements for decreases in emissions of nitrogen oxides?

(a)(1) The owner and operator of each source and each unit located in the State of Kansas and Indian country within the borders of the State and for which requirements are set forth under the CSAPR NO_X Annual Trading Program in subpart AAAAA of part 97 of this chapter must comply with such requirements. The obligation to comply with such requirements with regard to sources and units in the State will be eliminated by the promulgation of an approval by the Administrator of a revision to Kansas' State Implementation Plan (SIP) as correcting the SIP's deficiency that is the basis for the CSAPR Federal Implementation Plan under § 52.38(a) for those sources and units, except to the extent the Administrator's approval is partial or conditional. The obligation to comply with such requirements with regard to sources and units located in Indian country within the borders of the State will not be eliminated by the promulgation of an approval by the Administrator of a revision to Kansas' SIP.

(2) Notwithstanding the provisions of paragraph (a)(1) of this section, if, at the time of the approval of Kansas' SIP revision described in paragraph (a)(1) of this section, the Administrator has already started recording any allocations of CSAPR NO_X Annual allowances under subpart AAAAA of part 97 of this chapter to units in the State for a control period in any year, the provisions of subpart AAAAA of part 97 of this chapter authorizing the Administrator to complete the allocation and recordation of CSAPR NO_X Annual allowances

to units in the State for each such control period shall continue to apply, unless provided otherwise by such approval of the State's SIP revision.

(b)(1) The owner and operator of each source and each unit located in the State of Kansas and Indian country within the borders of the State and for which requirements are set forth under the CSAPR NO_X Ozone Season Group 2 Trading Program in subpart EEEEE of part 97 of this chapter must comply with such requirements with regard to emissions occurring in 2017 and each subsequent year. The obligation to comply with such requirements with regard to sources and units in the State will be eliminated by the promulgation of an approval by the Administrator of a revision to Kansas' State Implementation Plan (SIP) as correcting the SIP's deficiency that is the basis for the CSAPR Federal Implementation Plan (FIP) under § 52.38(b) for those sources and units, except to the extent the Administrator's approval is partial or conditional, provided that because the CSAPR FIP was promulgated as a partial rather than full remedy for an obligation of the State to address interstate air pollution, the SIP revision likewise will constitute a partial rather than full remedy for the State's obligation unless provided otherwise in the Administrator's approval of the SIP revision. The obligation to comply with such requirements with regard to sources and units located in Indian country within the borders of the State will not be eliminated by the promulgation of an approval by the Administrator of a revision to Kansas' SIP.

(2) Notwithstanding the provisions of paragraph (b)(1) of this section, if, at the time of the approval of Kansas' SIP revision described in paragraph (b)(1) of this section, the Administrator has already started recording any allocations of CSAPR NO_X Ozone Season Group 2 allowances under subpart EEEEE of part 97 of this chapter to units in the State for a control period in any year, the provisions of subpart EEEEE of part 97 of this chapter authorizing the Administrator to complete the allocation and recordation of CSAPR NO_X Ozone Season Group 2 allowances to units in the State for each such control period shall continue to apply, unless provided otherwise by such approval of the State's SIP revision.

[76 FR 48365, Aug. 8, 2011, as amended at 80 FR 50793, Aug. 21, 2015; 81 FR 74586 and 74595, Oct. 26, 2016]

§ 52.883 Interstate pollutant transport provisions; What are the FIP requirements for decreases in emissions of sulfur dioxide?

(a) The owner and operator of each source and each unit located in the State of Kansas and Indian country within the borders of the State and for which requirements are set forth under the CSAPR SO_2 Group 2 Trading Program in subpart DDDDD of part 97 of this chapter must comply with such requirements. The obligation to comply with such requirements will be eliminated with regard to sources and units in the State by the promulgation of an approval by the Administrator of a revision to Kansas' State Implementation Plan (SIP) as correcting the SIP's deficiency that is the basis for the CSAPR Federal Implementation Plan under § 52.39 for those sources and units, except to the extent the Administrator's approval is partial or conditional. The obligation to comply with such requirements with regard to sources and units located in Indian country within the borders of the State will not be eliminated by the promulgation of an approval by the Administrator of a revision to Kansas' SIP.

(b) Notwithstanding the provisions of paragraph (a) of this section, if, at the time of the approval of Kansas' SIP revision described in paragraph (a) of this section, the Administrator has already started recording any allocations of CSAPR SO_2 Group 2 allowances under subpart DDDDD of part 97 of this chapter to units in the State for a control period in any year, the provisions of subpart DDDDD of part 97 of this chapter authorizing the Administrator to complete the allocation and recordation of CSAPR SO_2 Group 2 allowances to units in the State for each such control period shall continue to apply, unless provided otherwise by such approval of the State's SIP revision.

[76 FR 48365, Aug. 8, 2011, as amended at 81 FR 74586 and 74596, Oct. 26, 2016]

§ 52.884 Significant deterioration of air quality.

(a) The requirements of section 160 through 165 of the Clean Air Act, as amended are met; except that:

(1) EPA retains PSD permit authority for Indian lands in the State of Kansas.

[49 FR 48186, Dec. 11, 1984, as amended at 54 FR 15935, Apr. 20, 1989; 58 FR 3848, Jan. 12, 1993]

Subpart S—Kentucky

§ 52.919 [Reserved]

§ 52.920 Identification of plan.

(a) *Purpose and scope.* This section sets forth the applicable State Implementation Plan for Kentucky under section 110 of the Clean Air Act, 42 U.S.C. 7401, and 40 CFR part 51 to meet national ambient air quality standards.

(b) *Incorporation by reference.* (1) Material listed in paragraph (c) of this section with an EPA approval date prior to October 1, 2003, for the Commonwealth of Kentucky (Table 1) and November 23, 2001, for Jefferson County, Kentucky (Table 2) was approved for incorporation by reference by the Director of the Federal Register in accordance with 5 U.S.C. 552(a) and 1 CFR part 51. Material is incorporated as it exists on the date of the approval, and notice of any change in the material will be published in the FEDERAL REGISTER. Entries in paragraph (c), Table 1, and paragraph (d) of this section with EPA approval dates after October 1, 2003, will be incorporated by reference in the next update to the SIP compilation. Entries in paragraph (c), Table 2, with EPA approval dates after October 23, 2001, will be incorporated by reference in the next update to the Jefferson County portion of the Kentucky SIP compilation.

(2) EPA Region 4 certifies that the rules/regulations provided by EPA in the SIP compilation at the addresses in paragraph (b)(3) of this section are an exact duplicate of the officially promulgated state rules/regulations which have been approved as part of the State and Local Implementation Plans listed in paragraph (b)(1) of this section.

(3) Copies of the materials incorporated by reference may be inspected at the Region 4 EPA Office at 61 Forsyth Street, SW., Atlanta, GA 30303; at the EPA, Office of Air and Radiation Docket and Information Center, Room B–108, 1301 Constitution Avenue, (Mail Code 6102T) NW., Washington, DC 20460; or at the National Archives and Records Administration (NARA). For information on the availability of this material at NARA, call 202–741–6030, or go to: *http://www.archives.gov/federal_register/code_of_federal_regulations/ibr_locations.html.*

(c) *EPA approved regulations.*

TABLE 1—EPA-APPROVED KENTUCKY REGULATIONS

State citation	Title/subject	State effective date	EPA approval date	Explanation
Chapter 50 Division for Air Quality; General Administrative Procedures				
401 KAR 50:005	General application	06/06/79	07/12/82, 47 FR 30059.	
401 KAR 50:010	Definitions and abbreviations of terms used in Title 401 Chapters 50, 51, 53, 55, 57, 59, 61, 63, and 65.	11/8/06	9/13/07, 72 FR 52282	
401 KAR 50:012	General application	11/12/97	07/24/98, 63 FR 39739.	
401 KAR 50:015	Documents incorporated by reference	04/14/88	02/07/90, 55 FR 4169.	
401 KAR 50:020	Air quality control regions	06/06/79	07/12/82, 47 FR 30059.	
401 KAR 50:025	Classification of counties	06/01/83	04/02/96, 61 FR 14489.	
401 KAR 50:030	Registration of sources	06/06/79	07/12/82, 47 FR 30059.	
401 KAR 50:040	Air quality models	06/06/79	07/12/82, 47 FR 30059.	
401 KAR 50:042	Good engineering practice stack height	06/10/86	09/04/87,52 FR 33592.	
401 KAR 50:045	Performance tests	07/13/05	10/17/07, 72 FR 58759.	
401 KAR 50:047	Test procedures for capture efficiency	06/24/92	06/23/94, 59 FR 32343.	
401 KAR 50:050	Monitoring	06/06/79	07/12/82, 47 FR 30059.	
401 KAR 50:055	General compliance requirements	09/22/82	05/04/89, 54 FR 19169.	
401 KAR 50:060	Enforcement	06/06/79	07/12/82, 47 FR 30059.	

TABLE 1—EPA-APPROVED KENTUCKY REGULATIONS—Continued

State citation	Title/subject	State effective date	EPA approval date	Explanation
401 KAR 50:065	Conformity of general federal actions	10/11/95	07/27/98, 63 FR 40044.	
401 KAR 50:066	Conformity of transportation plans, programs, and projects. (Amendment).	11/12/2008	04/21/2010 75 FR 20780	
Chapter 51 Attainment and Maintenance of the National Ambient Air Quality Standards				
401 KAR 51:001	Definitions for 401 KAR Chapter 51	12/7/2012	11/3/14, 79 FR 65143	
401 KAR 51:005	Purpose and general provisions	06/06/79	07/12/82, 47 FR 30059.	
401 KAR 51:010	Attainment status designations	11/12/97	07/24/98, 63 FR 39739.	
401 KAR 51:017	Prevention of significant deterioration of air quality.	12/7/2012	11/3/14, 79 FR 65143	With the exception of the SILs and SMC provisions for $PM_{2.5}$.
401 KAR 51:052	Review of new sources in or impacting non-attainment areas.	8/4/2011	10/8/2015, 80 FR 60805	
401 KAR 51:150	NO_X requirements for stationary internal combustion engines.	2/3/06	10/23/09, 74 FR 54755	
401 KAR 51:160	NO_X requirements for large utility and industrial boilers.	2/3/06	10/23/09, 74 FR 54755	
401 KAR 51:170	NO_X requirements for cement kilns	08/15/01	04/11/02, 67 FR 17624.	
401 KAR 51:180	NO_X credits for early reduction and emergency	08/15/01	04/11/02, 67 FR 17624.	
401 KAR 51:190	Banking and trading NO_X allowances	08/15/01	04/11/02, 67 FR 17624.	
401 KAR 51:195	NO_X opt-in provisions	08/15/01	04/11/02, 67 FR 17624.	
401 KAR 51.210	CAIR NO_X Annual Trading Program	2/2/2007	10/4/2007, 72 FR 56623	
401 KAR 51.220	CAIR NO_X Ozone Season Trading Program	6/13/2007	10/4/2007, 72 FR 56623	
401 KAR 51.230	CAIR SO_2 Trading Program	2/2/2007	10/4/2007, 72 FR 56623	
Chapter 52 Permits, Registrations, and Prohibitory Rules				
401 KAR 52:001	Definitions for 401 KAR Chapter 52	11/18/06	9/13/07, 72 FR 52282	
401 KAR 52:020	Title V permits	1/15/01	1/28/16, 81 FR 4896	Only adding the first sentence of Section 22 entitled "*Annual Emissions Certification*", and introductory paragraph text and subsection (4) of Section 23 entitled "*Certification by Responsible Official*".
401 KAR 52:030	Federally enforceable permits for non-major sources.	01/15/01	09/06/06, 71 FR 52464	
** 401 KAR 52:040.	State-origin permits	1/15/01	1/28/16, 81 FR 4896	Only adding subsection (2) introductory text, subsection (2)(c), and subsection (3) of Section 3 entitled "*General Provisions*"; subsection (1) of Section 20 entitled "*Annual Emissions Certification for Specified Sources*"; and introductory text and subsection (4) of Section 21 entitled "*Certification by Responsible Official*".

TABLE 1—EPA-APPROVED KENTUCKY REGULATIONS—Continued

State citation	Title/subject	State effective date	EPA approval date	Explanation
401 KAR 52:070	Registration of designated sources	1/15/01	1/28/16, 81 FR 4896	Only adding subsection (2) introductory text, subsection (2)(a)(1), and first sentence of subsection (2)(a)(2) of Section 3 entitled "*General Provisions*".
401 KAR 52:090	Prohibitory rule for hot mix asphalt plants	01/15/01	09/06/06, 71 FR 52464	
401 KAR 52:100	Public, affected state, and U.S. EPA review	01/15/01	09/06/06, 71 FR 52464	
Chapter 53 Ambient Air Quality				
401 KAR 53:005	General provisions	04/14/88	02/07/90, 55 FR 4169.	
401 KAR 53:010	Ambient air quality standards	7/19/2016	9/12/2017, 82 FR 42748.	
Chapter 55 Emergency Episodes				
401 KAR 55:005	Significant harm criteria	04/14/88	02/07/90, 55 FR 4169.	
401 KAR 55:010	Episode criteria	04/14/88	02/07/90, 55 FR 4169.	
401 KAR 55:015	Episode declaration	06/06/79	01/25/80, 45 FR 6092.	
401 KAR 55:020	Abatement strategies	06/06/79	01/25/80, 45 FR 6092.	
Chapter 59 New Source Standards				
401 KAR 59:001	Definitions for abbreviations of terms used in the Title 401, Chapter 59.	11/18/06	9/13/07, 72 FR 52282	
401 KAR 59:005	General provisions	12/01/82	12/04/86, 51 FR 43742.	
401 KAR 59:010	New process operations	04/14/88	02/07/90, 55 FR 4169.	
401 KAR 59:015	New indirect heat exchangers	01/07/81	03/22/83, 48 FR 11945.	
401 KAR 59:020	New incinerators	06/06/79	07/12/82, 47 FR 30059.	
401 KAR 59:046	Selected new petroleum refining processes and equipment.	06/29/79	08/07/81, 46 FR 40188.	
401 KAR 59:050	New storage vessels for petroleum liquids	02/04/81	03/30/83, 48 FR 13168.	
401 KAR 59:080	New kraft (sulfate) pulp mills	06/06/79	01/25/80, 45 FR 6092.	
401 KAR 59:085	New sulfite pulp mills	06/06/79	07/12/82, 47 FR 30059.	
401 KAR 59:090	New ethylene producing plants	06/06/79	07/12/82, 47 FR 30059.	
401 KAR 59:095	New oil-effluent water separators	06/29/79	08/07/81, 46 FR 40188.	
401 KAR 59:101	New bulk gasoline plants	09/28/94	06/28/96, 61 FR 33674.	
401 KAR 59:105	New process gas steams	04/07/82	03/22/83, 48 FR 11945.	
401 KAR 59:174	Stage II controls at gasoline dispensing facilities	5/3/2016	10/14/2016, 81 FR 70966	
401 KAR 59:175	New service stations	02/08/93	06/23/94, 59 FR 32343.	
401 KAR 59:185	New solvent metal cleaning equipment	01/04/05	10/04/05, 70 FR 57750.	
401 KAR 59:190	New insulation of magnet wire operations	06/24/92	06/23/94, 59 FR 32343.	
401 KAR 59:210	New fabric, vinyl and paper surface coating operations.	06/24/92	06/23/94, 59 FR 32343.	
401 KAR 59:212	New graphic arts facilities using rotogravure and flexography.	06/24/92	06/23/94, 59 FR 32343.	
401 KAR 59:214	New factory surface coating operations of flat wood paneling.	06/24/92	06/23/94, 59 FR 32343.	
401 KAR 59:225	New miscellaneous metal parts and products surface coating operation.	06/24/92	06/23/94, 59 FR 32343.	
401 KAR 59:230	New synthesized pharmaceutical product manufacturing operations.	06/24/92	06/23/94, 59 FR 32343.	
401 KAR 59:235	New pneumatic rubber tire manufacturing plants	02/04/81	03/30/83, 48 FR 13168.	
401 KAR 59:240	New perchloroethylene dry cleaning systems	06/24/92	06/23/94, 59 FR 32343.	
401 KAR 59:315	Specific new sources	06/24/92	06/23/94, 59 FR 32343.	
401 KAR 59:760	Commercial Motor Vehicle and Mobile Equipment Refinishing Operations.	03/11/05	10/04/05, 70 FR 57750	
Chapter 61 Existing Source Standards				
401 KAR 61:001	Definitions and abbreviations of terms used in the Title 401, Chapter 61.	11/18/06		
401 KAR 61:005	General provisions	12/01/82	05/04/89, 54 FR 19169.	
401 KAR 61:010	Existing incinerators	06/06/79	05/04/89, 54 FR 19169.	

TABLE 1—EPA-APPROVED KENTUCKY REGULATIONS—Continued

State citation	Title/subject	State effective date	EPA approval date	Explanation
401 KAR 61:015	Existing indirect heat exchangers	06/01/83	04/02/96, 61 FR 14489.	
401 KAR 61:020	Existing process operations	04/14/88	02/07/90, 55 FR 4169.	
401 KAR 61:025	Existing kraft (sulfate) pulp mills	06/06/79	05/26/82, 47 FR 22955	
401 KAR 61:030	Existing sulfuric acid plants	06/06/79	03/22/83, 48 FR 11945.	
401 KAR 61:035	Existing process gas streams	04/07/82	03/22/83, 48 FR 11945.	
401 KAR 61:040	Existing ethylene producing plants	06/06/79	01/25/80, 45 FR 6092.	
401 KAR 61:045	Existing oil-effluent water separators	06/29/79	08/07/81, 46 FR 40188.	
401 KAR 61:050	Existing storage vessels for petroleum liquids	06/24/92	06/23/94, 59 FR 32345.	
401 KAR 61:055	Existing loading facilities at bulk gasoline terminals.	08/24/82	03/30/83, 48 FR 13168.	
401 KAR 61:056	Existing bulk gasoline plants	09/28/94	06/28/96, 61 FR 33674.	
401 KAR 61:060	Existing sources using organic solvents	06/29/79	01/25/80, 45 FR 6092.	
401 KAR 61:065	Existing nitric acid plants	06/06/79	07/12/82, 47 FR 30059.	
401 KAR 61:070	Existing ferroalloy production facilities	06/06/79	05/03/84, 49 FR 18833.	
401 KAR 61:075	Steel plants and foundries using existing electric arc furnaces.	12/01/82	05/04/89, 54 FR 19169.	
401 KAR 61:080	Steel plants using existing basic oxygen process furnaces.	04/01/84	05/04/89, 54 FR 19169.	
401 KAR 61:085	Existing service stations	02/08/93	06/23/94, 59 FR 32343.	
401 KAR 61:090	Existing automobile and light-duty truck surface coating operations.	06/24/92	06/23/94, 59 FR 32343.	
401 KAR 61:095	Existing solvent metal cleaning equipment	06/24/92	06/23/94, 59 FR 32343.	
401 KAR 61:100	Existing insulation of magnet wire operations	06/24/92	06/23/94, 59 FR 32343.	
401 KAR 61:105	Existing metal furniture surface coating operations.	06/24/92	06/23/94, 59 FR 32343.	
401 KAR 61:110	Existing large appliance surface coating operations.	06/24/92	06/23/94, 59 FR 32343.	
401 KAR 61:120	Existing fabric, vinyl and paper surface coating operations.	06/24/92	06/23/94, 59 FR 32343.	
401 KAR 61:122	Existing graphic arts facilities using rotogravure and flexography.	06/24/92	06/23/94, 59 FR 32343.	
401 KAR 61:124	Existing factory surface coating operations of flat wood paneling.	06/24/92	06/23/94 59 FR 32343.	
401 KAR 61:125	Existing can surface coating operations	06/24/92	06/23/94, 59 FR 32343.	
401 KAR 61:130	Existing coil surface coating operations	06/24/92	06/23/94, 59 FR 32343.	
401 KAR 61:132	Existing miscellaneous metal parts and products surface coating operations.	06/24/92	06/23/94, 59 FR 32343.	
401 KAR 61:135	Selected existing petroleum refining processes and equipment.	06/29/79	01/25/80, 45 FR 6092.	
401 KAR 61:137	Leaks from existing petroleum refinery equipment.	06/24/92	06/23/94, 59 FR 32343.	
401 KAR 61:140	Existing by-product coke manufacturing plants	09/04/86	05/04/89, 54 FR 19169.	
401 KAR 61:145	Existing petroleum refineries	01/07/81	03/22/83, 48 FR 11945.	
401 KAR 61:150	Existing synthesized pharmaceutical product manufacturing operations.	06/24/92	06/23/94, 59 FR 32343.	
401 KAR 61:155	Existing pneumatic rubber tire manufacturing plants.	06/24/92	06/23/94, 59 FR 32343.	
401 KAR 61:160	Existing perchloroethylene dry cleaning systems	06/24/92	06/23/94, 59 FR 32343.	
401 KAR 61:165	Existing primary aluminum reduction plants	06/04/85	12/02/86, 51 FR 43395.	
401 KAR 61:170	Existing blast furnace casthouses	04/14/88	02/07/90, 55 FR 4169.	
401 KAR 61:175	Leaks from existing synthetic organic chemical and polymer manufacturing equipment.	06/24/92	06/23/94, 59 FR 32343.	
Chapter 63 General Standards of Performance				
401 KAR 63:001	Definitions and abbreviations of terms used in 401 KAR Chapter 63.	11/18/06	9/13/07, 72 FR 52282	
401 KAR 63:005	Open burning	07/13/05	10/17/07, 72 FR 58759.	
401 KAR 63:010	Fugitive emissions	06/06/79	07/12/82, 47 FR 30059.	
401 KAR 63:015	Flares	06/06/79	12/24/80, 45 FR 84999.	
401 KAR 63:025	Asphalt paving operations	06/24/92	06/23/94, 59 FR 32343.	
401 KAR 63:031	Leaks from gasoline tank trunks	02/08/93	06/23/94, 59 FR 32343.	
Chapter 65 Mobile Source-Related Emissions				
401 KAR 65:001	Definitions and abbreviations of terms used in 401 KAR Chapter 65.	11/18/06	9/13/07, 72 FR 52282	
401 KAR 65:005	Liquefied petroleum gas carburetion systems	06/06/79	01/25/80, 45 FR 6092.	

TABLE 1—EPA-APPROVED KENTUCKY REGULATIONS—Continued

State citation	Title/subject	State effective date	EPA approval date	Explanation
Kentucky Revised Statutes (KRS)				
KRS Chapter 11A.020.	Public servant prohibited from certain conduct-Exception-Disclosure of personal or private interest.	7/15/1998	10/3/2012, 77 FR 60307	
KRS Chapter 11A.030.	Considerations in determination to abstain from action on official decision-Advisory opinion.	7/14/1992	10/3/2012, 77 FR 60307	
KRS Chapter 11A.040.	Acts prohibited for public servant or officer-exception.	7/16/2006	10/3/2012, 77 FR 60307	
KRS Chapter 224.10–020.	Department within the cabinet-Offices and divisions within the departments-Appointments.	7/15/2010	10/3/2012, 77 FR 60307	
KRS Chapter 224.10–100.	Powers and duties of cabinet	8/30/2007	10/3/2012, 77 FR 60307	

TABLE 2—EPA-APPROVED JEFFERSON COUNTY REGULATIONS FOR KENTUCKY

Reg	Title/subject	EPA approval date	**Federal Register** notice	District effective date	Explanation
Reg 1—General Provisions					
1.01	General Application of Regulations and Standards.	10/23/01	66 FR 53660	03/17/99	
1.02	Definitions	7/28/2017	82 FR 35101	6/15/2011	Changes to Definitions with the exception of the term ''acute noncancer effect.''
1.03	Abbreviations and Acronyms.	8/31/2017	82 FR 41335	1/16/2008	
1.04	Performance Tests	10/23/01	66 FR 53660	11/19/97	
1.05	Compliance with Emission Standards and Maintenance Requirements.	10/23/01	66 FR 53660	11/18/92	
1.06	Stationary Source Self-Monitoring, Emissions Inventory Development, and Reporting.	8/28/2017	82 FR 40701	1/19/2011	Revision approved except section 5 and any references to section 5 located in section 3.
1.07		Excess Emissions During Startups, Shutdowns, and Upset Conditions	6/10/2014	79 FR 33101	7/21/2005
1.08	Administrative Procedures	8/31/2017	82 FR 41335	3/21/2010	
1.09	Prohibition of Air Pollution	10/23/01	66 FR 53660	11/16/83	
1.10	Circumvention	10/23/01	66 FR 53660	04/19/72	
1.11	Control of Open Burning	8/31/2017	82 FR 41335	1/16/2008	
1.14	Control of Fugitive Particulate Emissions.	10/23/01	66 FR 53660	01/20/88	
1.18	Rule Effectiveness	10/23/01	66 FR 53689	09/21/94	
1.19	Administrative Hearings	8/31/2017	82 FR 41335	1/16/2008	
Reg 2—Permit Requirements					
2.01	General Application	10/23/01	66 FR 53660	04/21/82	
2.02	Air Pollution Regulation Requirements and Exemptions.	10/23/01	66 FR 53660	06/21/95	
2.03	Permit Requirements—Non-Title V Construction and Operating Permits and Demolition/Renovation Permits.	10/23/01	66 FR 53660	12/15/93	

TABLE 2—EPA-APPROVED JEFFERSON COUNTY REGULATIONS FOR KENTUCKY—Continued

Reg	Title/subject	EPA approval date	**Federal Register** notice	District effective date	Explanation
2.04	Construction or Modification of Major Sources in or Impacting Upon Non-Attainment Areas (Emission Offset Requirements).	10/23/01	66 FR 53660	03/17/93	
2.05	Prevention of Significant Deterioration of Air Quality.	10/12/12	77 FR 62150	11/17/10	This approval does not include Jefferson County's revisions to incorporate by reference the Ethanol Rule (72 FR 24060, May 1, 2007), Fugitives Emissions Rule (73 FR 77882, December 19, 2008), the PM_{10} Grandfathering Provision and the term ''particulate matter emissions'' (at 40 CFR 52.21(i)(1)(xi) and 51.166(b)(49)(vi) respectively in the NSR $PM_{2.5}$ Rule (73 FR 28321, May 16, 2008).
2.06	Permit Requirements—Other Sources.	10/23/01	66 FR 53660	11/16/83	
2.07	Public Notification for Title V, PSD, and Offset Permits; SIP Revisions; and Use of Emission Reduction Credits.	10/23/01	66 FR 53660	06/21/95	
2.09	Causes for Permit Suspension.	11/03/03	68 FR 62236	06/19/02	
2.10	Stack Height Considerations.	10/23/01	66 FR 53660	07/19/89	
2.11	Air Quality Model Usage	10/23/01	66 FR 53660	05/19/99	
2.17	Federally Enforceable District Origin Operating Permits.	11/03/03	68 FR 62236	06/19/02	
Reg 3—Ambient Air Quality Standards					
3.01	Ambient Air Quality Standards.	5/11/2018	83 FR 21907	2/15/2017	
Reg 4—Emergency Episodes					
4.01	General Provisions for Emergency Episodes.	10/23/01	66 FR 53660	06/13/79	
4.02	Episode Criteria	10/23/01	66 FR 53660	04/20/88	
4.03	General Abatement Requirements.	10/23/01	66 FR 53660	02/16/83	
4.04	Particulate and Sulfur Dioxide Reduction Requirements.	10/23/01	66 FR 53660	04/19/72	
4.05	Hydrocarbon and Nitrogen Oxides Reduction Requirements.	10/23/01	66 FR 53660	02/16/83	
4.06	Carbon Monoxide Reduction Requirements.	10/23/01	66 FR 53660	02/16/83	
4.07	Episode Reporting Requirements.	10/23/01	66 FR 53660	06/13/79	
Reg 6—Standards of Performance for Existing Affected Facilities					
6.01	General Provisions	10/23/01	66 FR 53660	11/16/83	
6.02	Emission Monitoring for Existing Sources.	10/23/01	66 FR 53660	11/16/83	

TABLE 2—EPA-APPROVED JEFFERSON COUNTY REGULATIONS FOR KENTUCKY—Continued

Reg	Title/subject	EPA approval date	**Federal Register** notice	District effective date	Explanation
6.07	Standards of Performance for Existing Indirect Heat Exchangers.	10/23/01	66 FR 53660	06/13/79	
6.08	Standard of Performance for Existing Incinerators.	10/23/01	66 FR 53660	06/13/79	
6.09	Standards of Performance for Existing Process Operations.	10/23/01	66 FR 53660	03/17/99	
6.10	Standard of Performance for Existing Process Gas Streams.	10/23/01	66 FR 53660	11/16/83	
6.12	Standard of Performance for Existing Asphalt Paving Operations.	10/23/01	66 FR 53661	05/15/91	
6.13	Standard of Performance for Existing Storage Vessels for Volatile Organic Compounds.	10/23/01	66 FR 53661	05/15/91	
6.14	Standard of Performance for Selected Existing Petroleum Refining Processes and Equipment.	10/23/01	66 FR 53661	04/21/82	
6.15	Standard of Performance for Gasoline Transfer to Existing Service Station Storage Tanks (Stage I Vapor Recovery).	01/25/80	45 FR 6092	06/13/79	
6.16	Standard of Performance for Existing Large Appliance Surface Coating Operations.	10/23/01	66 FR 53661	05/15/91	
6.17	Standard of Performance for Existing Automobile and Truck Surface Coating Operations.	10/23/01	66 FR 53661	11/18/92	
6.18	Standards of Performance for Existing Solvent Metal Cleaning Equipment.	8/31/2017	82 FR 41335	5/9/2003	
6.19	Standard of Performance for Existing Metal Furniture Surface Coating Operations.	10/23/01	66 FR 53661	05/15/91	
6.20	Standard of Performance for Existing Bulk Gasoline Plants.	10/23/01	66 FR 53661	11/16/83	
6.21	Standard of Performance for Existing Gasoline Loading Facilities at Bulk Terminals.	10/23/01	66 FR 53661	11/16/83	
6.22	Standard of Performance for Existing Volatile Organic Materials Loading Facilities.	10/23/01	66 FR 53661	03/17/93	
6.24	Standard of Performance for Existing Sources Using Organic Materials.	10/23/01	66 FR 53661	03/17/93	
6.26	Standards of Performance for Existing Volatile Organic Compound Water Separators.	10/23/01	66 FR 53661	06/13/79	
6.27	Standards of Performance for Existing Liquid Waste Incinerators.	10/23/01	66 FR 53661	06/13/79	
6.28	Standard of Performance for Existing Hot Air Aluminum Atomization Processes.	10/23/01	66 FR 53661	03/18/81	

TABLE 2—EPA-APPROVED JEFFERSON COUNTY REGULATIONS FOR KENTUCKY—Continued

Reg	Title/subject	EPA approval date	**Federal Register** notice	District effective date	Explanation
6.29	Standards of Performance for Existing Graphic Arts Facilities Using Rotogravure and Flexography.	10/12/2017	82 FR 47376	8/21/2013	
6.30	Standard of Performance for Existing Factory Surface Coating Operations of Flat Wood Paneling.	10/23/01	66 FR 53661	05/15/91	
6.31	Standard of Performance for Existing Miscellaneous Metal Parts and Products Surface-Coating Operations.	10/23/01	66 FR 53661	04/23/96	
6.32	Standard of Performance for Leaks from Existing Petroleum Refinery Equipment.	10/23/01	66 FR 53661	05/15/91	
6.33	Standard of Performance for Existing Synthesized Pharmaceutical Product Manufacturing Operations.	10/23/01	66 FR 53661	05/15/91	
6.34	Standard of Performance for Existing Pneumatic Rubber Tire Manufacturing Plants.	10/23/01	66 FR 53661	05/15/91	
6.35	Standard of Performance for Existing Fabric, Vinyl and Paper Surface Coating Operations.	10/23/01	66 FR 53661	05/15/91	
6.38	Standard of Performance for Existing Air Oxidation Processes in Synthetic Organic Chemical Manufacturing Industries.	10/23/01	66 FR 53661	12/17/86	
6.39	Standard of Performance for Equipment Leaks of Volatile Organic Compounds in Existing Synthetic Organic Chemical and Polymer Manufacturing Plants.	10/23/01	66 FR 53661	07/17/96	
6.40	Standards of Performance for Gasoline Transfer to Motor Vehicles (Stage II Vapor Recovery and Control System).	9/18/2017	82 FR 43489	11/10/2016	
6.42	Reasonably Available Control Technology Requirements for Major Volatile Organic Compound- and Nitrogen Oxides-Emitting Facilities.	10/23/01	66 FR 53661	03/17/99	
6.43	Volatile Organic Compound Reduction Requirements.	8/31/2017	82 FR 41335	2/15/2006	
6.45	Standards of Performance for Existing Solid Waste Landfills.	10/23/01	66 FR 53689	02/02/94	
6.44	Standards of Performance for Existing Commercial Motor Vehicle and Mobile Equipment Refinishing Operations.	10/23/01	66 FR 53661	09/20/95	
6.46	Standards of Performance for Existing Ferroalloy and Calcium Carbide Production Facilities.	10/23/01	66 FR 53661	12/21/94	

TABLE 2—EPA-APPROVED JEFFERSON COUNTY REGULATIONS FOR KENTUCKY—Continued

Reg	Title/subject	EPA approval date	**Federal Register** notice	District effective date	Explanation
6.48	Standard of Performance for Existing Bakery Oven Operations.	10/23/01	66 FR 53661	07/19/95	
6.49	Standards of Performance for Reactor Processes and Distillation Operations Processes in the Synthetic Organic Chemical Manufacturing Industry.	10/23/01	66 FR 53664	06/20/01	
6.50	NO_X Requirements for Portland Cement Kilns.	11/19/02	67 FR 69688	03/20/02	
Reg 7—Standards of Performance for New Affected Facilities					
7.01	General Provisions	10/23/01	66 FR 53661	05/17/00	
7.06	Standards of Performance for New Indirect Heat Exchangers.	10/23/01	66 FR 53661	04/21/82	
7.07	Standard of Performance for New Incinerators.	10/23/01	66 FR 53661	09/15/93	
7.08	Standards of Performance for New Process Operations.	10/23/01	66 FR 53661	03/17/99	
7.09	Standards of Performance for New Process Gas Streams.	10/23/01	66 FR 53661	06/18/97	
7.11	Standard of Performance for New Asphalt Paving Operations.	10/23/01	66 FR 53661	05/15/91	
7.12	Standard of Performance for New Storage Vessels for Volatile Organic Compounds.	10/23/01	66 FR 53661	05/15/91	
7.14	Standard of Performance for Selected New Petroleum Refining Processes and Equipment.	10/23/01	66 FR 53661	06/13/79	
7.15	Standards of Performance for Gasoline Transfer to New Service Station Storage Tanks (Stage I Vapor Recovery).	10/23/01	66 FR 53662	04/20/88	
7.20	Standard of Performance for New Gasoline Loading Facilities at Bulk Plants.	10/23/01	66 FR 53662	11/16/83	
7.22	Standard of Performance for New Volatile Organic Materials Loading Facilities.	10/23/01	66 FR 53662	03/17/93	
7.25	Standard of Performance for New Sources Using Volatile Organic Compounds.	10/23/01	66 FR 53662	03/17/93	
7.34	Standard of Performance for New Sulfite Pulp Mills.	10/23/01	66 FR 53662	06/13/79	
7.35	Standard of Performance for New Ethylene Producing Plants.	10/23/01	66 FR 53662	06/13/79	
7.36	Standard of Performance for New Volatile Organic Compound Water Separators.	10/23/01	66 FR 53662	06/13/79	
7.51	Standard of Performance for New Liquid Waste Incinerators.	10/23/01	66 FR 53662	01/20/88	

TABLE 2—EPA-APPROVED JEFFERSON COUNTY REGULATIONS FOR KENTUCKY—Continued

Reg	Title/subject	EPA approval date	**Federal Register** notice	District effective date	Explanation
7.52	Standard of Performance for New Fabric, Vinyl, and Paper Surface Coating Operations.	10/23/01	66 FR 53662	05/15/91	
7.55	Standard of Performance for New Insulation of Magnet Wire.	10/23/01	66 FR 53662	03/17/93	
7.56	Standard of Performance for Leaks from New Petroleum Refinery Equipment.	10/23/01	66 FR 53662	05/15/91	
7.58	Standard of Performance for New Factory Surface Coating Operations of Flat Wood Paneling.	10/23/01	66 FR 53662	05/15/91	
7.59	Standard of Performance for New Miscellaneous Metal Parts and Products Surface Coating Operations.	10/23/01	66 FR 53662	04/23/96	
7.60	Standard of Performance for New Synthesized Pharmaceutical Product Manufacturing Operations.	10/23/01	66 FR 53662	05/15/91	
7.77	Standards of Performance for New Blast Furnace Casthouses.	10/23/01	66 FR 53662	10/20/93	
7.79	Standards of Performance for New Commercial Motor Vehicles and Mobile Equipment Refinishing Operations.	10/23/01	66 FR 53690	02/02/94	
7.81	Standard of Performance for New or Modified Bakery Oven Operations.	10/23/01	66 FR 53662	05/17/00	
Reg 8—Mobile Source Emissions Control					

(d) *EPA-approved source specific requirements.*

EPA-APPROVED KENTUCKY SOURCE-SPECIFIC REQUIREMENTS

Name of source	Permit No.	State effective date	EPA approval date	Explanations
Bubble action at Kentucky Utilities Green River Plant.	N/A	12/01/80	06/15/81, 46 FR 31260.	
Bubble action at Corning Glassworks.	N/A	05/18/81	10/29/81, 46 FR 53408.	
Bubble action at National Distillers Company's, Old Crow Plant.	N/A	12/24/80	09/14/81, 46 FR 45610.	
Bubble action at Borden Chemical CO in Jefferson CO..	N/A	03/05/82	05/11/82, 47 FR 20125.	
Variance for seven perchloroethylene dry cleaners.	N/A	08/04/82	05/02/83, 48 FR 19176.	
Variance for two dry cleaners	N/A	01/27/83	05/05/83, 48 FR 20233.	
Variance for Jiffy and Hiland Dry Cleaners.	N/A	04/25/84	04/18/85, 50 FR 15421.	
TVA Paradise Permit	KDEPDAQ Permit 0–87–012	6/29/87	08/25/89, 54 FR 35326	WITHDRAWN
Opacity variance for boiler Units 1 and 2 of TVA's Paradise Steam Plant.	KDEPDAQ Permit 0–86–75	07/24/96	08/17/88, 53 FR 30998.	

EPA-APPROVED KENTUCKY SOURCE-SPECIFIC REQUIREMENTS—Continued

Name of source	Permit No.	State effective date	EPA approval date	Explanations
Operating Permits for nine presses at the Alcan Foil Products facility—Louisville.	APCDJC Permits 103–74, 104–74, 105–74, 103–74, 110–74, 111–74.	02/28/90	05/16/90, 55 FR 20269.	
Operating Permit requiring VOC RACT for Calgon CO.	KDEPDAQ Permit 0–94–020 ..	11/17/94	05/24/95, 60 FR 27411.	
Reynolds Metals Company	APCDJC Permits 103–74, 104–74, 016–74, 110–74, 111–74.	04/16/97	01/13/98, 63 FR 1929.	
Alternative Averaging Period for American Greetings Corporation.	KDEPDAQ Permit V–98–049 ..	07/07/99	05/09/01, 66 FR 23617.	
Title V permit requiring VOC RACT for Publisher's Printing, Inc., Bullitt County.	KDEPDAQ Permit 21–029–00019.	07/20/01	10/23/01, 66 FR 53664.	
Board Order American Synthetic Rubber Company.	NO_X RACT Plan 12/20/00	01/01/01	10/23/01, 66 FR 53684.	
Board Order E.I. du Pont de Nemours & Company.	NO_X RACT Plan 02/21/01	03/01/01	10/23/01, 66 FR 53684.	
Board Order Ford Louisville Assembly Plant.	NO_X RACT Plan 11/08/99	01/01/00	10/23/01, 66 FR 53684.	
Board Order General Electric Company.	NO_X RACT Plan 01/17/01	03/01/01	10/23/01, 66 FR 53684.	
Board Order Kosmos Cement Company.	NO_X RACT Plan 05/03/04	05/03/04	05/18/05, 70 FR 28429.	
Board Order Louisville Gas and Electric Company, Cane Run Generating Station.	NO_X RACT Plan 10/18/00	01/01/01	10/23/01, 66 FR 53684.	
Board Order Louisville Gas and Electric Company, Mill Creek Generating Station.	NO_X RACT Plan 10/18/00	01/01/01	10/23/01, 66 FR 53684.	
Board Order Louisville Medical Center Steam Plant.	NO_X RACT Plan 1/18/2017	1/18/2017	10/12/2017, 82 FR 47376	
Board Order Oxy Vinyls, LP	NO_X RACT Plan 12/20/00	01/01/01	10/23/01, 66 FR 53685.	
Board Order Rohm and Haas Company.	NO_X RACT Plan 12/20/00	01/01/01	10/23/01, 66 FR 53685.	
Board Order Texas Gas Transmission.	NO_X RACT Plan 5/18/2016	5/18/2016	10/12/2017, 82 FR 47376	
Lawson Mardon Packaging, USA, Inc..	N/A	08/11/03	07/10/03, 68 FR 41084.	
Calgon Carbon Corporation	V–00–015	05/13/05	05/24/06, 71 FR 29786	The only parts of the permit being approved and incorporated are the SO_2 emission limits from the following emissions points: 12, 14, 21, 31, 34, 32, 40, 39, 42, and 64.
TVA Paradise Permit	KDEPDAQ Permit 0–87–012 ..	10/19/07	4/29/08, 73 FR 23105	Emission Rates Units 1 and 2 are 1.2 lb/MMBTU and Unit 3 is 1.2 lb/MMBTU or *3.1 lb/MMBTU.
Source-Specific SIP Revision for Avis Budget Car Rental Group.	N/A	8/9/07	11/30/09, 74 FR 62499	Removal of stage II requirements

EPA-APPROVED KENTUCKY SOURCE-SPECIFIC REQUIREMENTS—Continued

Name of source	Permit No.	State effective date	EPA approval date	Explanations
LG & E Cane Run Generating Station NO_X RACT Plan Amendment 2.	N/A	7/18/2012	8/30/2016, 81 FR 59488	

*Bypass of the scrubber shall be limited to 720 operating hours in any 12 consecutive months.

(e) *EPA-approved non-regulatory provisions.*

EPA—APPROVED KENTUCKY NON-REGULATORY PROVISIONS

Name of non-regulatory SIP provision	Applicable geographic or nonattainment area	State submittal date/effective date	EPA approval date	Explanations
Air Quality surveillance plan	Commonwealth of Kentucky.	11/15/79	11/16/81, 46 FR 56198.	
Protection Visibility in Class I Areas.	Mammoth Cave National Park (Class I area).	08/31/97	07/12/88, 53 FR 26253.	
Small Business Assistance Program.	Commonwealth of Kentucky.	07/15/93	06/19/95, 60 FR 31915.	
Lexington Maintenance Plan	Fayette County, Scott County.	08/24/04	09/16/04, 69 FR 55751.	
Ashland-Huntington Maintenance Plan.	Boyd County, Greenup County.	05/24/95	06/29/95, 60 FR 33752.	
Maintenance Plan for Owensboro & Edmonson County Area.	Daviess County, Hancock County, Edmonson County.	04/14/98	09/03/98, 63 FR 46898.	
Northern Kentucky 15% Plan & I/M.	Boone, Campbell and Kenton Counties.	09/11/98	12/08/98, 63 FR 67591.	
Negative Declarations for the nonattainment portions of Bullitt and Oldham Counties in Louisville 1-hour moderate ozone nonattainment area for CTG rules for aerospace, SOCMI, shipbuilding, and wood furniture manufacturing.	Jefferson County, Bullitt County, Oldham County.	12/14/99	10/23/01, 66 FR 53665.	
Negative Declarations submitted by the Air Pollution Control District of Jefferson County for the Louisville 1-hour moderate ozone nonattainment area for CTG rules for aerospace, shipbuilding, and wood furniture manufacturing.	Jefferson County, Bullitt County, Oldham County.	02/26/01	10/23/01, 66 FR 53665.	
Louisville 1-Hour Ozone Maintenance Plan.	Jefferson County and portions of Bullitt and Oldham Counties.	11/1/03	05/18/05, 70 FR 28429.	
Maintenance Plan for Paducah Area.	Marshall County and a portion of Livingston County.	06/14/01	08/20/01, 66 FR 43488.	
Northern Kentucky 1-Hour Ozone Maintenance Plan.	Boone, Campbell, and Kenton Counties.	02/09/05	10/04/05, 70 FR 57750	
8-Hour Ozone Maintenance Plan for the Christian County, Kentucky area.	Christian County	05/20/05	01/25/06, 71 FR 4047	
Kentucky portion of the Ashland-Huntington Sulfur Dioxide Maintenance Plan.	Boyd County	05/13/05	05/24/06, 71 FR 29786	
Louisville 8-hour Ozone Maintenance Plan.	Bullitt County, Jefferson County, Oldham County.	09/26/2006	07/05/07, 72 FR 36601	
Huntington-Ashland 8-hour Ozone Maintenance Plan.	Boyd County	09/29/06	08/03/07, 71 FR 43172	
Northern Kentucky 8-Hour Ozone Maintenance plan.	Boone, Campbell and Kenton Counties in Kentucky.	1/29/2010	8/5/2010, 75 FR 47218	For the 1997 8-hour ozone NAAQS.
Paducah 8-Hour Ozone Attainment/1-Hour Ozone Maintenance Plan Section 110(a)(1).	Marshall and Livingston Counties.	May 27, 2008	8/26/2010, 75 FR 52467	

EPA—APPROVED KENTUCKY NON-REGULATORY PROVISIONS—Continued

Name of non-regulatory SIP provision	Applicable geographic or nonattainment area	State submittal date/ effective date	EPA approval date	Explanations
Huntington—Ashland 8-Hour Ozone Section 110(a)(1) Maintenance Plan.	A portion of Greenup County.	May 27, 2008	4/14/11, 76 FR 20853	For the 1997 8-hour ozone NAAQS.
Lexington 8-Hour Ozone Section 110(a)(1) Maintenance Plan Section 110(a)(1).	Fayette and Scott Counties.	May 27, 2008	4/14/11, 76 FR 20853	For the 1997 8-hour ozone NAAQS.
Edmonson County 8-Hour Ozone Section 110(a)(1) Maintenance Plan.	Edmonson County	May 27, 2008	4/14/11, 76 FR 20853	For the 1997 8-hour ozone NAAQS.
Owensboro 8-Hour Ozone Section 110(a)(1) Maintenance Plan.	Daviess County and a portion of Hancock County.	May 27, 2008	4/14/11, 76 FR 20853	For the 1997 8-hour ozone NAAQS.
110(a)(1) and (2) Infrastructure Requirements for the 1997 8-Hour Ozone National Ambient Air Quality Standards.	Commonwealth of Kentucky.	12/13/2007	7/13/2011, 76 FR 41088	For the 1997 8-hour ozone NAAQS.
1997 Annual $PM_{2.5}$ Maintenance Plan for the Northern Kentucky Area.	Boone, Campbell and Kenton Counties (Kentucky portion of the Cincinnati-Hamilton OH-KY-IN Area).	1/27/11	12/15/2011, 76 FR 77903	For the 1997 Annual $PM_{2.5}$ NAAQS.
Huntington-Ashland 1997 $PM_{2.5}$ Attainment Plan.	Boyd County; Portion of Lawrence County.	12/03/2008	4/11/2012, 77 FR 21663	For the 1997 $PM_{2.5}$ NAAQS.
Regional Haze Plan and Plan Amendment.	Statewide	06/25/08 and 05/28/10	03/30/12, 77 FR 19098	Source-specific BART requirements are summarized in Table 7.5.3–2 of the Commonwealth's May 28, 2010 submittal.
Louisville; 1997 Annual Fine Particulate Matter 2002 Base Year Emissions Inventory.	Bullitt and Jefferson Counties.	12/03/2008	8/2/12, 77 FR 45956.	
110(a)(1) and (2) Infrastructure Requirements for 1997 Fine Particulate Matter National Ambient Air Quality Standards.	Kentucky	8/26/2008	10/3/2012, 77 FR 60307	With the exception of section 110(a)(2)(D)(i), With respect to sections 110(a)(2)(C) related to PSD requirements and 110(a)(2)(J) related to PSD requirements, EPA conditionally approved these requirements.
110(a)(1) and (2) Infrastructure Requirements for 2006 Fine Particulate Matter National Ambient Air Quality Standards.	Kentucky	7/17/2012	10/3/2012, 77 FR 60307	With the exception of section 110(a)(2)(D)(i), With respect to sections 110(a)(2)(C) related to PSD requirements and 110(a)(2)(J) related to PSD requirements, EPA conditionally approved these requirements.
1997 Annual $PM_{2.5}$ Maintenance Plan for the Kentucky portion of the Huntington-Ashland Area.	Boyd County and Lawrence County (part) (Kentucky portion of the Huntington-Ashland WV–KY–OH Area).	2/9/12	12/26/12, 77 FR 75865	For the 1997 Annual $PM_{2.5}$ NAAQS.

EPA—APPROVED KENTUCKY NON-REGULATORY PROVISIONS—Continued

Name of non-regulatory SIP provision	Applicable geographic or nonattainment area	State submittal date/ effective date	EPA approval date	Explanations
110(a)(1) and (2) Infrastructure Requirements for the 2008 8-Hour Ozone National Ambient Air Quality Standards.	Commonwealth of Kentucky.	7/17/2012	3/7/2013 78 FR 14681	With the exception of section 110(a)(2)(D)(i)(I) concerning interstate transport which is being disapproved and, the portions of sections 110(a)(2)(C), prong 3 of 110(a)(2)(D)(i), and 110(a)(2)(J) related to structural PSD requirements, which are being conditionally approved.
MVEB Update for the 1997 8-hour Ozone Maintenance Plan for Northern Kentucky.	Boone, Campbell, and Kenton Counties, KY.	8/9/12	6/5/13, 78 FR 33726	
110(a)(1) and (2) Infrastructure Requirements for 1997 Fine Particulate Matter National Ambient Air Quality Standards.	Kentucky	8/26/2008	5/7/2014, 79 FR 26143	Addressing prong 4 of section 110(a)(2)(D)(i) only.
110(a)(1) and (2) Infrastructure Requirements for 2006 Fine Particulate Matter National Ambient Air Quality Standards.	Kentucky	7/17/2012	5/7/2014, 79 FR 26143	Addressing prong 4 of section 110(a)(2)(D)(i) only.
110(a)(1) and (2) Infrastructure Requirements for the 2008 Lead NAAQS.	Kentucky	7/17/2012	3/18/2015, 80 FR 14019	Addressing the PSD permitting requirements of sections 110(a)(2)(C), 110(a)(2)(D)(i)(II) (prong 3) and 110(a)(2)(J) only
110(a)(1) and (2) Infrastructure Requirements for the 2010 NO_2 NAAQS.	Kentucky	4/26/2013	3/18/2015, 80 FR 14019	Addressing the PSD permitting requirements of sections 110(a)(2)(C), 110(a)(2)(D)(i)(II) (prong 3) and 110(a)(2)(J) only.
110(a)(1) and (2) Infrastructure Requirements for the 2008 Lead National Ambient Air Quality Standards.	Commonwealth of Kentucky.	July 17, 2012	10/9/2015, 80 FR 61107	With the exception of provisions pertaining to PSD permitting requirements in sections 110(a)(2)(C), 110(a)(2)(D)(i)(II) (prong 3) and 110(a)(2)(J) only.
110(a)(1) and (2) Infrastructure Requirements for the 2010 1-hour NO_2 NAAQS.	Kentucky	4/26/2013	11/21/2016, 81 FR 83152	With the exception of the regulation of new minor sources and minor modifications under section 110(a)(2)(C), section 110(a)(2)(D)(i)(I) and (II) (prongs 1–4) and the PSD requirements of section 110(a)(2)(J).

EPA—APPROVED KENTUCKY NON-REGULATORY PROVISIONS—Continued

Name of non-regulatory SIP provision	Applicable geographic or nonattainment area	State submittal date/ effective date	EPA approval date	Explanations
110(a)(1) and (2) Infrastructure Requirements for the 2010 1-hour SO_2 NAAQS.	Kentucky	04/26/2013	12/6/2016	With the exception of the minor source program requirements of section 110(a)(2)(C) and the interstate transport requirements of section 110(a)(2)(D)(i)(I) and (II) (prongs 1, 2, and 4).
2010 1-hour SO_2 Maintenance Plan for the Kentucky Portion of the Campbell-Clermont, KY-OH Area.	Campbell County portion of Campbell-Clermont, KY-OH Nonattainment Area.	2/22/2016	3/10/2017	This includes the 172(c)(1) RACM determination and the 172(c)(3) base-year emissions inventory.
RACM for the Kentucky portion of Louisville, KY-IN Area for the 1997 Annual $PM_{2.5}$ NAAQS.	Bullitt and Jefferson Counties.	08/09/2016	12/27/2016, 82 FR 95041	
1997 Annual $PM_{2.5}$ Maintenance Plan for the Kentucky portion of the bi-state Louisville Area.	Bullitt and Jefferson Counties.	3/5/2012	4/7/2017, 82 FR 16943	
2008 8-hour ozone NAAQS Nonattainment New Source Review Requirements for the Kentucky Portion of the Cincinnati-Hamilton OH–KY–IN Area.	Boone, Campbell and Kenton Counties (part) (Kentucky portion of the Cincinnati-Hamilton, OH–KY–IN Area).	8/26/2016	4/10/2017, 82 FR 17131	
2008 8-hour ozone Maintenance Plan for the Kentucky portion of the Cincinnati-Hamilton, OH-KY-IN Area.	Portions of Boone (2000 Census tracts: 702, 703.05, 703.06, 703.07, 703.08, 703.09, 704.01, 704.02, 705.01, 705.02, 706.01, 706.03, 706.04), Campbell (2000 Census tracts: 501, 502, 503, 504, 505, 506, 512, 513, 519.01, 519.03, 519.04, 520.01, 520.02, 521, 522, 523.01, 523.02, 524, 525, 526, 528, 529, 530, 531), and Kenton (2000 Census tracts: 603, 607, 609, 610, 611, 612, 613, 614, 616, 636.03, 636.04, 636.05, 636.06, 638, 640, 641, 642, 643, 644, 645, 646, 647, 648, 649, 650, 651, 652, 653, 654, 655.01, 655.02, 656, 657, 658, 659, 668, 669, 670, 671) Counties, KY.	8/26/2016	7/5/2017 82 FR 30976	
2008 8-hour ozone base year emissions inventory for the Kentucky portion of the Cincinnati-Hamilton, OH-KY-IN Area.	Portions of Boone, Campbell and Kenton Counties in Kentucky.	8/26/2016	7/5/2017 82 FR 30976	182(a)(1) base-year emissions inventory

EPA—APPROVED KENTUCKY NON-REGULATORY PROVISIONS—Continued

Name of non-regulatory SIP provision	Applicable geographic or nonattainment area	State submittal date/effective date	EPA approval date	Explanations
110(a)(1) and (2) Infrastructure Requirements for the 2012 Annual Fine $PM_{2.5}$ NAAQS.	Kentucky	2/8/2016	8/8/2017, 82 FR 37012	With the exception of section 110(a)(2)(D)(i)(I) and (II) (prongs 1, 2 and 4) and the minor source program requirement of section 110(a)(2)(C).
September 2014 Regional Haze Progress Report.	Kentucky	9/17/2014	10/12/2017, 82 FR 47378	
Removal of Reliance on Reformulated Gasoline in the Kentucky portion of the Cincinnati-Hamilton, OH–KY–IN Area.	Boone, Campbell and Kenton Counties (Kentucky portion of the Cincinnati-Hamilton Area).	9/13/2017	4/2/2018, 83 FR 13872	

[64 FR 28750, May 27, 1999]

EDITORIAL NOTE: For FEDERAL REGISTER citations affecting § 52.920, see the List of CFR Sections Affected, which appears in the Finding Aids section of the printed volume and at *www.fdsys.gov*.

§ 52.921 Classification of regions.

The Kentucky plan was evaluated on the basis of the following classifications:

Air quality control region	Pollutant				
	Particulate matter	Sulfur oxides	Nitrogen dioxide	Carbon monoxide	Photochemical oxidants (hydrocarbons)
Appalachian Intrastate	II	III	III	III	III
Bluegrass Intrastate	II	III	III	III	III
Evansville (Indiana)-Owensboro-Henderson (Kentucky) Interstate	I	II	III	III	III
Huntington (West Virginia)-Ashland (Kentucky)-Portsmouth-Ironton (Ohio) Interstate	I	III	III	III	III
Louisville Interstate	I	I	III	III	I
Metropolitan Cincinnati Interstate	I	II	III	III	I
North Central Kentucky Intrastate	II	III	III	III	III
Paducah (Kentucky)-Cairo (Illinois) Interstate	I	II	III	III	III
South Central Kentucky Intrastate	III	III	III	III	III

[37 FR 10868, May 31, 1972, as amended at 39 FR 16346, May 8, 1974]

§ 52.922 [Reserved]

§ 52.923 Approval status.

(a) With the exceptions set forth in this subpart, the Administrator approves Kentucky's plan for the attainment and maintenance of the national standards under section 110 of the Clean Air Act. Furthermore, the Administrator finds that the plan satisfies all requirements of part D, title 1, of the Clean Air Act as amended in 1977.

(b) New Source review permits issued pursuant to Section 173 of the Clean Air Act will not be deemed valid by EPA unless the provisions of Section V of Appendix S of 40 CFR part 51 are met.

[45 FR 72157, Oct. 31, 1980, as amended at 79 FR 30050, May 27, 2014]

§ 52.924 Legal authority.

(a) The requirements of § 51.230(f) of this chapter are not met since K.R.S. 224.380 of the Air Pollution Control Law of the Commonwealth of Kentucky (June 18, 1970) does not provide

for the release, under certain circumstances, of emission data to the public.

(b) Delegation of Authority: Pursuant to section 114 of the Act, Kentucky requested a delegation of authority to enable it to collect, correlate, and release emission data to the public. The Administrator has determined that Kentucky is qualified to receive a delegation of the authority it requested. Accordingly, the Administrator delegates to Kentucky his authority under section 114(a) (1) and (2) and section 114(c) of the Act, i.e., authority to collect, correlate, and release emission data to the public.

[37 FR 10868, May 31, 1972, as amended at 37 FR 15084, July 27, 1972; 51 FR 40676, Nov. 7, 1986]

§ 52.925 General requirements.

(a) The requirements of § 51.116(c) of this chapter are not met since the legal authority to provide for public availability of emission data is inadequate.

[39 FR 34536, Sept. 26, 1974, as amended at 51 FR 40676, Nov. 7, 1986]

§ 52.926 Attainment dates for national standards.

The following table presents the latest dates by which the national standards are to be attained. The dates reflect the information presented in Kentucky's plan, except where noted.

Air quality control region	Pollutant						
	Particulate matter		Sulfur oxides		Nitrogen dioxide	Carbon monoxide	Ozone
	Primary	Secondary	Primary	Secondary			
Appalachian Intrastate:							
a. Bell County	g	h	b	b	b	b	b
b. Perry County	g	h	b	b	b	b	b
c. Whitley County	g	h	b	b	b	b	b
d. Rest of AQCR	c	*c*	b	b	b	b	b
Bluegrass Intrastate:							
a. Fayette County	a	*c*	b	b	b	b	*g*
b. Madison County	g	h	b	b	b	b	b
c. Rest of AQCR	a	*c*	b	b	b	b	b
Evansville (Indiana)-Ownsboro-Henderson (Kentucky) Interstate:							
a. Daviess County	g	i	g	g	b	b	b
b. Henderson County	g	i	a	e	b	b	*g*
c. Webster County	c	*c*	g	g	b	b	b
d. Rest of AQCR	c	*c*	a	e	b	b	b
Huntington (West Virginia)-Ashland (Kentucky)-Portsmouth-Ironton (Ohio) Interstate:							
a. Boyd County	g	i	g	b	b	b	*g*
b. Lawrence County	g	h	b	b	b	b	b
c. Rest of AQCR	c	*c*	b	b	b	b	b
Louisville Interstate	g	i	j	j	b	h	h
Metropolitan Cincinnati Interstate:							
a. Boone County	c	*c*	a	d	b	*d*	h
b. Campbell County	g	h	a	d	b	*d*	h
c. Kenton County	c	*c*	a	d	b	*d*	h
d. Rest of AQCR	c	*c*	a	*d*	b	*d*	c
North Central Kentucky Intrastate:							
a. Bullitt County	g	h	b	b	b	b	b
b. Rest of AQCR	a	*c*	b	b	b	b	b
Paducah (Kentucky) Cairo (Illinois) Interstate:							
a. McCracken County	g	h	g	f	b	b	b
b. Marshall County	c	g	a	f	b	b	b
c. Muhlenberg County	g	h	g	g	b	b	b
d. Rest of AQCR	c	*c*	a	f	b	b	b
South Central Kentucky Intrastate	b	b	b	b	b	b	b

See § 81.318 of this chapter to identify the specific nonattainment area.

NOTE: Dates or footnotes in italics are prescribed by the Administrator because the plan did not provide a specific date or the dates provided were not acceptable. Sources subject to plan requirements and attainment dates established under section 110(a)(2)(A) prior to the 1977 Clean Air Act Amendments remain obligated to comply with those requirements by the earlier deadlines. The earlier attainment dates are set out at 40 CFR 52.926 (1979 edition).

a. Air quality levels presently below primary standards or area is unclassifiable.

b. Air quality levels presently below secondary standards or area is unclassifiable.
c. April 1975.
d. July 1975.
e. July 1977.
f. July 1978.
g. December 31, 1982.
h. December 31, 1987.
i. 18 month extension for plan submittal granted: attainment date not yet established.
j. January 1, 1985.

[45 FR 85002, Dec. 24, 1980]

§ 52.927 Compliance schedule.

(a) The information in this section is available in the 40 CFR, part 52 edition revised as of July 1, 1999, the 40 CFR, part 52, Volume 1 of 2 (§§ 52.01 to 52.1018) editions revised as of July 1, 2000 through July 1, 2011, and the 40 CFR, part 52, Volume 1 of 3 (§§ 52.01 to 52.1018) editions revised as of July 1, 2012.

(b) [Reserved]

[79 FR 30050, May 27, 2014]

§ 52.928 Control strategy: Sulfur oxides.

The revised SO_2 emission limit for large coal-fired boilers in Bell, Clark, and Woodford Counties, submitted on June 29, 1979, is disapproved since it does not provide for attainment and maintenance of all SO_2 NAAQS. The limit approved by EPA on May 10, 1976 (41 FR 19105), remains the limit applicable to these sources.

[49 FR 11091, Mar. 23, 1984]

§ 52.929 Determination of attainment.

(a) Based upon EPA's review of the air quality data for the 3-year period 2007–2009, EPA determined that the Huntington-Ashland, West Virginia-Kentucky-Ohio $PM_{2.5}$ nonattainment Area attained the 1997 annual $PM_{2.5}$ NAAQS by the applicable attainment date of April 5, 2010. Therefore, EPA has met the requirement pursuant to CAA section 179(c) to determine, based on the Area's air quality as of the attainment date, whether the Area attained the standard. EPA also determined that the Huntington-Ashland $PM_{2.5}$ nonattainment Area is not subject to the consequences of failing to attain pursuant to section 179(d).

(b) Based upon EPA's review of the air quality data for the 3-year period 2007–2009, EPA determined that the Louisville, Kentucky-Indiana $PM_{2.5}$ nonattainment Area attained the 1997 annual $PM_{2.5}$ NAAQS by the applicable attainment date of April 5, 2010. Therefore, EPA has met the requirement pursuant to CAA section 179(c) to determine, based on the Area's air quality as of the attainment date, whether the Area attained the standard. EPA also determined that the Louisville $PM_{2.5}$ nonattainment Area is not subject to the consequences of failing to attain pursuant to section 179(d).

(c) Based upon EPA's review of the air quality data for the 3-year period 2007–2009, EPA determined that the Cincinnati-Hamilton, Ohio, Kentucky, and Indiana $PM_{2.5}$ nonattainment Area attained the 1997 annual $PM_{2.5}$ NAAQS by the applicable attainment date of April 5, 2010. Therefore, EPA has met the requirement pursuant to CAA section 179(c) to determine, based on the Area's air quality as of the attainment date, whether the Area attained the standard. EPA also determined that the Cincinnati-Hamilton, Ohio, Kentucky, and Indiana $PM_{2.5}$ nonattainment Area is not subject to the consequences of failing to attain pursuant to section 179(d).

[76 FR 55543, Sept. 7, 2011, as amended at 76 FR 55546, Sept. 7, 2011; 76 FR 60375, Sept. 29, 2011]

§ 52.930 Control strategy: Ozone.

(a) The VOC bubble for Alcan Foil Products in Louisville submitted as a SIP revision on March 3, 1986, is disapproved. The source must continue to meet all the requirements of Jefferson County Regulation 6.29.

(b) *Part D—disapproval*—(1) Campbell and Kenton Counties nonattainment area. The 1979 SIP revisions for these two counties are disapproved because the Commonwealth failed to submit evidence of legal authority to implement a vehicle inspection and maintenance program as required under section 172(b)(11)(B) of the Clean Air Act.

No major new or modified sources of volatile organic compounds can be built in these two counties by virtue of the provisions of section 110(a)(2)(l) of the Clean Air Act.

(2) Northern Kentucky (Boone, Campbell and Kenton Counties) ozone nonattainment area. The demonstration of attainment of the ozone standards by the end of 1982, submitted as part of Kentucky's ozone SIP revision on June 23, 1982, (draft), September 27, 1982, and November 3, 1982, is disapproved. As a result, the extension of the attainment deadline until December 31, 1987, remains in effect, along with the related requirement to submit a SIP revision addressing all requirements of Part D extension areas.

(c) The redesignation request submitted by the Commonwealth of Kentucky, on November 11, 1994, for the Kentucky portion of the Cincinnati-Northern Kentucky moderate interstate ozone nonattainment area from nonattainment to attainment was disapproved on September 27, 1996.

(d) Kentucky's November 15, 1996, request for a 1-year attainment date extension for the Kentucky portion of the Cincinnati-Hamilton metropolitan moderate ozone nonattainment area which consists of Kenton, Boone, and Campbell Counties is approved. The date for attaining the ozone standard in these counties is November 15, 1997.

(e) Kentucky's November 15, 1996, request for a 1-year attainment date extension for the Kentucky portion of the Louisville moderate ozone nonattainment area which consists of Jefferson County and parts of Bullitt and Oldham Counties is approved. The date for attaining the ozone standard in these counties is November 15, 1997.

(f) Kentucky's January 7, 1998, request for a 1-year attainment date extension for the Kentucky portion of the Cincinnati-Hamilton metropolitan moderate ozone nonattainment area which consists of Kenton, Boone, and Campbell Counties is approved. The date for attaining the ozone standard in these counties is November 15, 1998.

(g) The redesignation request submitted by the Commonwealth of Kentucky, on October 29, 1999, for the Kentucky portion of the Cincinnati-Hamilton moderate interstate ozone nonattainment area from nonattainment to attainment was approved on July 5, 2000. The mobile source budgets for the Kentucky portion of the area for the purposes of transportation conformity are now 5.83 tons per summer day of volatile organic compounds and 15.13 tons per summer day of nitrogen oxides for the year 2010.

(h) Determination—EPA is determining that as of July 5, 2000, the Kentucky portion of the Cincinnati-Hamilton ozone nonattainment area (which includes the Counties of Boone, Kenton, and Campbell) has attained the 1-hour ozone standard and that the attainment demonstration requirements of section 182(b)(1), 182(j), and 172(c)(1), along with the section 172(c)(9) contingency measure requirements, do not apply to the area.

(i) Approval—EPA is approving an exemption from the requirements contained in section 182(f) of the Clean Air Act. This approval exempts Boone, Kenton, and Campbell counties in Kentucky from the NO_X related general conformity provisions; nonattainment NSR for new sources and modifications that are major for NO_X; NO_X RACT; and the requirement for a demonstration of compliance with the enhanced I/M performance standard for NO_X.

(j) [Reserved]

(k) The redesignation request submitted by the Commonwealth of Kentucky, on March 30, 2001, and supplemented on July 9, 2001, for the Kentucky portion of the Louisville moderate interstate ozone nonattainment area from nonattainment to attainment was approved on October 23, 2001. The motor vehicle emissions budgets for VOC and NO_X in the Kentucky portion of the Louisville moderate interstate maintenance plan are adequate for conformity purposes and approvable as part of the maintenance plan. The 1-hour ozone standard maintenance plan motor vehicle emission budgets for the entire interstate Louisville area for the purposes of transportation conformity are now 48.17 tons per summer day of VOC and 92.93 tons per summer day of NO_X for the year 2012.

(l) *Disapproval.* EPA is disapproving in part, the Commonwealth of Kentucky's Infrastructure SIP for the 2008 8-hour Ozone National Ambient Air

Quality Standards addressing section 110(a)(2)(D)(i)(I) concerning interstate transport requirements, submitted July 17, 2012.

(m) *Determination of attainment*. The EPA has determined, as of June 3, 2016, that based on 2012 to 2014 ambient air quality data, the Cincinnati, OH-KY-IN 2008 ozone Marginal nonattainment area has attained the 2008 ozone NAAQS. Therefore, the EPA has met the requirement pursuant to CAA section 181(b)(2)(A) to determine, based on the area's air quality data as of the attainment date, whether the area attained the standard. The EPA also determined that the Cincinnati, OH-KY-IN nonattainment area will not be reclassified for failure to attain by its applicable attainment date under section 181(b)(2)(A).

[46 FR 58082, Nov. 30, 1981, as amended at 48 FR 13169, Mar. 30, 1983; 51 FR 10210, Mar. 25, 1986; 54 FR 10983, Mar. 16, 1989; 60 FR 32469, June 22, 1995; 60 FR 40101, Aug. 7, 1995; 61 FR 50720, Sept. 27, 1996; 62 FR 28637, May 27, 1997; 62 FR 40281, July 28, 1997; 62 FR 55176, Oct. 23, 1997; 62 FR 61246, Nov. 17, 1997; 63 FR 14625, Mar. 26, 1998; 65 FR 37898, June 19, 2000; 66 FR 53685, Oct. 23, 2001; 78 FR 14688, Mar. 7, 2013; 81 FR 26709, May 4, 2016]

§ 52.931 Significant deterioration of air quality.

(a) Regulations for preventing significant deterioration of air quality. The provisions of § 52.21 (b) through (w) are hereby incorporated and made a part of the applicable state plan for the State of Kentucky only as they apply to permits issued pursuant to § 52.21 prior to final approval of Kentucky's Regulation for Prevention of Significant Deterioration (PSD), Visibility Monitoring, and Visibility New Source Review in Attainment Areas. The provisions of § 52.21 (b) through (w) are rescinded for permits issued after final approval of Kentucky's Regulation for Prevention of Significant Deterioration (PSD), Visibility Monitoring, and Visibility New Source Review in Attainment Areas.

(b) The Commonwealth of Kentucky has committed to revising the state's regulations accordingly when EPA amends the federal vessel emissions provisions contained in 40 CFR 51.166. In a letter dated October 17, 1986, Kentucky stated:

As requested, the Division of Air Pollution Control hereby commits to changing the definition of ''building, structure, facility, or installation,'' and any other applicable definitions, when the issue of vessel emissions is resolved at the federal level, and after the federal regulation, 40 CFR 51.24, is amended.

(c) In a letter dated May 3, 1988, EPA informed Kentucky that the following caveat must be included in all potentially affected permits due to a decision of the U.S. Court of Appeals for the District of Columbia Circuit (*NRDC* v. *Thomas*, 838 F.2d 1224):

In approving this permit, the Kentucky Division for Air Quality has determined that the application complies with the applicable provisions of the stack height regulations as revised by the EPA on July 8, 1985 (50 FR 27892). Portions of the regulations have been remanded by a panel of the U.S. Court of Appeals for the D.C. Circuit in NRDC v. *Thomas*, 838 F.2d 1224 (D.C. Cir. 1988). Consequently, this permit may be subject to modification if and when the EPA revises the regulation in response to the court decision. This may result in revised emission limitations or may affect other actions taken by the source owners or operators.

Kentucky responded with a letter dated May 11, 1988, stating in part:

This is in response to your letter dated May 3, 1988 * * *. As requested by your letter, the Kentucky Division for Air Quality agrees to include the condition set forth in your letter, in all potentially affected permits issued under regulation 401 KAR 51:017 or 401 KAR 51:052. Therefore, we request that you consider this letter as our commitment that the required caveat will be included in all potentially affected permits * * *.

(d) All applications and other information required pursuant to § 52.21 from sources located in the Commonwealth of Kentucky shall be submitted to the appropriate state or local agency for which the source is located, rather than to EPA's Region 4 office: Kentucky Department for Environmental Protection, Division for Air Quality, 300 Sower Boulevard, 2nd Floor, Frankfort, Kentucky 40601; or Louisville Metro Air Pollution Control District, 701 W. Ormsby Ave., Suite 303, Louisville, Kentucky 40203.

[54 FR 36311, Sept. 1, 1989, as amended at 74 FR 55143, Oct. 27, 2009; 79 FR 30050, May 27, 2014; 82 FR 32645, July 17, 2017]

§ 52.932 Rules and regulations.

(a) The last sentence of section 3(1) of Kentucky regulation 401 KAR 3:050, which specifies that a new fossil fuel fired steam electric generator's allowable SO_2 emissions may be calculated by averaging SO_2 emissions from existing units of this type and from new ones, is disapproved since it contravenes subpart D of 40 CFR part 60, New Source Performance Standards.

(b) Section 8(2)(a) of regulation 401 KAR 61:015 is disapproved in that it allows the Tennessee Valley Authority's Shawnee power plant until October 1, 1981, to achieve compliance with emissions limits which are not made more stringent by the 1979 Part D revisions, and which the source was previously required to meet by July 1, 1977.

(c) Section 8(2)(d) of regulation 401 KAR 61:015 is disapproved in that it allows sources until December 31, 1982, to achieve compliance with emission limits which are not made more stringent by the 1979 Part D revisions, and which the sources were previously required to meet prior to 1979.

[41 FR 19106, May 10, 1976, as amended at 46 FR 40188, Aug. 7, 1981]

§ 52.933 Control Strategy: Sulfur oxides and particulate matter.

(a) In a letter dated March 27, 1987, the Kentucky Department for Natural Resources and Environmental Protection certified that no emission limits in the State's plan are based on dispersion techniques not permitted by EPA's stack height rules. This certification does not apply to: Big Rivers-Green #1 & 2, Kentucky Utilities-Ghent #3 & 4, and Ashland Oil, Inc.-Catlettsburg.

(b) *Determination of Attainment.* EPA has determined, as of March 9, 2011, that the Louisville, IN-KY $PM_{2.5}$ nonattainment area has attained the 1997 $PM_{2.5}$ NAAQS. These determinations, in accordance with 40 CFR 51.1004(c), suspend the requirements for this area to submit an attainment demonstration, associated reasonably available control measures, reasonable further progress, contingency measures, and other plan elements related to attainment of the standards for as long as the area continues to meet the 1997 $PM_{2.5}$ NAAQS.

(c) *Disapproval.* EPA is disapproving portions of Kentucky's Infrastructure SIP for the 2006 24-hour $PM_{2.5}$ NAAQS addressing interstate transport, specifically with respect to section 110(a)(2)(D)(i)(I).

(d) *Determination of Attainment.* EPA has determined, as of September 7, 2011, that based upon 2007–2009 air quality data, the Huntington-Ashland, West Virginia-Kentucky-Ohio, nonattainment Area has attained the 1997 annual $PM_{2.5}$ NAAQS. This determination, in accordance with 40 CFR 52.1004(c), suspends the requirements for this Area to submit an attainment demonstration, associated reasonably available control measures, a reasonable further progress plan, contingency measures, and other planning SIPs related to attainment of the standard for as long as this Area continues to meet the 1997 annual $PM_{2.5}$ NAAQS.

(e) *Determination of Attainment.* EPA has determined, as of September 29, 2011, that based upon 2007–2009 air quality data, the Cincinnati-Hamilton, Ohio-Kentucky-Indiana nonattainment Area has attained the 1997 annual $PM_{2.5}$ NAAQS. This determination, in accordance with 40 CFR 52.1004(c), suspends the requirements for this Area to submit an attainment demonstration, associated reasonably available control measures, a reasonable further progress plan, contingency measures, and other planning SIPs related to attainment of the standard for as long as this Area continues to meet the 1997 annual $PM_{2.5}$ NAAQS.

[54 FR 23478, June 1, 1989, as amended at 76 FR 12862, Mar. 9, 2011; 76 FR 43143, July 20, 2011; 76 FR 55543, Sept. 7, 2011; 76 FR 60376, Sept. 29, 2011]

§ 52.934 [Reserved]

§ 52.935 PM_{10} State implementation plan development in group II areas.

On July 7, 1988, the State submitted a committal SIP for the cities of Ashland and Catlettsburg in Boyd County. The committal SIP contains all the requirements identified in the July 1, 1987, promulgation of the SIP requirements for PM_{10} at 52 FR 24681. The SIP commits the State to submit an emissions inventory, continue to monitor for PM_{10}, report data and to submit a

full SIP if a violation of the PM_{10} National Ambient Air Quality Standards is detected.

[55 FR 4172, Feb. 7, 1990]

§ 52.936 Visibility protection.

(a) *Regional Haze*. The requirements of section 169A of the Clean Air Act are not met because the regional haze plan submitted by Kentucky on June 25, 2008, and amended on May 28, 2010, does not include fully approvable measures for meeting the requirements of 40 CFR 51.308(d)(3) and 51.308(e) with respect to emissions of NO_X and SO_2 from electric generating units. EPA has given limited approval and limited disapproval to the plan provisions addressing these requirements.

(b) *Measures Addressing Limited Disapproval Associated with NO_X*. The deficiencies associated with NO_X identified in EPA's limited disapproval of the regional haze plan submitted by Kentucky on June 25, 2008, and amended on May 28, 2010, are satisfied by § 52.940.

(c) *Measures Addressing Limited Disapproval Associated with SO_2*. The deficiencies associated with SO_2 identified in EPA's limited disapproval of the regional haze plan submitted by Kentucky on June 25, 2008, and amended on May 28, 2010, are satisfied by § 52.941.

[77 FR 33657, June 7, 2012]

§ 52.937 Review of new sources and modifications.

(a) Approval—EPA is approving the section 182(f) oxides of nitrogen (NO_X) reasonably available control technology (RACT) exemption request submitted by the Kentucky Department for Environmental Protection on August 16, 1994, for the Kentucky portion of the Huntington-Ashland ozone (O_3) moderate nonattainment area. This approval exempts this area from implementing NO_X RACT on major sources of NO_X. If a violation of the O_3 NAAQS occurs in the area, the exemption from the requirement of section 182(f) of the CAA in the applicable area shall not apply.

(b) Approval—EPA is approving the section 182(f) oxides of nitrogen (NO_X) reasonably available control technology (RACT) exemption for the Kentucky portion of the Cincinnati-Hamilton ozone (O_3) moderate nonattainment area. This approval exempts this area from implementing NO_X RACT on major sources of NO_X.

[60 FR 21717, May 3, 1995, as amended at 65 FR 37898, June 19, 2000]

§ 52.938 General conformity.

The General Conformity regulations were submitted on November 10, 1995, and adopted into the Kentucky State Implementation Plan (SIP). The Commonwealth of Kentucky incorporated by reference regulations 40 CFR part 51, subpart W—determining conformity of General Federal Actions to State or Federal Implementation Plans.

[63 FR 40046, July 27, 1998]

§ 52.939 Original identification of plan section.

(a) This section identified the original ''Air Implementation Plan for the State of Kentucky'' and all revisions submitted by Kentucky that were federally approved prior to March 1, 1999. The information in this section is available in the 40 CFR, part 52 edition revised as of July 1, 1999, the 40 CFR, part 52, Volume 1 of 2 (§§ 52.01 to 52.1018) editions revised as of July 1, 2000 through July 1, 2011, and the 40 CFR, part 52, Volume 1 of 3 (§§ 52.01 to 52.1018) editions revised as of July 1, 2012. The Jefferson County portion of the Commonwealth of Kentucky's SIP previously identified in section 52.934(a) and (b) is also available in the above editions.

[79 FR 30051, May 27, 2014]

§ 52.940 Interstate pollutant transport provisions; What are the FIP requirements for decreases in emissions of nitrogen oxides?

(a)(1) The owner and operator of each source and each unit located in the State of Kentucky and for which requirements are set forth under the CSAPR NO_X Annual Trading Program in subpart AAAAA of part 97 of this chapter must comply with such requirements. The obligation to comply with such requirements will be eliminated by the promulgation of an approval by the Administrator of a revision to Kentucky's State Implementation Plan (SIP) as correcting the SIP's

deficiency that is the basis for the CSAPR Federal Implementation Plan under § 52.38(a), except to the extent the Administrator's approval is partial or conditional.

(2) Notwithstanding the provisions of paragraph (a)(1) of this section, if, at the time of the approval of Kentucky's SIP revision described in paragraph (a)(1) of this section, the Administrator has already started recording any allocations of CSAPR NO_X Annual allowances under subpart AAAAA of part 97 of this chapter to units in the State for a control period in any year, the provisions of subpart AAAAA of part 97 of this chapter authorizing the Administrator to complete the allocation and recordation of CSAPR NO_X Annual allowances to units in the State for each such control period shall continue to apply, unless provided otherwise by such approval of the State's SIP revision.

(b)(1) The owner and operator of each source and each unit located in the State of Kentucky and for which requirements are set forth under the CSAPR NO_X Ozone Season Group 1 Trading Program in subpart BBBBB of part 97 of this chapter must comply with such requirements with regard to emissions occurring in 2015 and 2016.

(2) The owner and operator of each source and each unit located in the State of Kentucky and for which requirements are set forth under the CSAPR NO_X Ozone Season Group 2 Trading Program in subpart EEEEE of part 97 of this chapter must comply with such requirements with regard to emissions occurring in 2017 and each subsequent year. The obligation to comply with such requirements will be eliminated by the promulgation of an approval by the Administrator of a revision to Kentucky's State Implementation Plan (SIP) as correcting the SIP's deficiency that is the basis for the CSAPR Federal Implementation Plan (FIP) under § 52.38(b), except to the extent the Administrator's approval is partial or conditional, provided that because the CSAPR FIP was promulgated as a partial rather than full remedy for an obligation of the State to address interstate air pollution, the SIP revision likewise will constitute a partial rather than full remedy for the State's obligation unless provided otherwise in the Administrator's approval of the SIP revision.

(3) Notwithstanding the provisions of paragraph (b)(2) of this section, if, at the time of the approval of Kentucky's SIP revision described in paragraph (b)(2) of this section, the Administrator has already started recording any allocations of CSAPR NO_X Ozone Season Group 2 allowances under subpart EEEEE of part 97 of this chapter to units in the State for a control period in any year, the provisions of subpart EEEEE of part 97 of this chapter authorizing the Administrator to complete the allocation and recordation of CSAPR NO_X Ozone Season Group 2 allowances to units in the State for each such control period shall continue to apply, unless provided otherwise by such approval of the State's SIP revision.

[76 FR 48365, Aug. 8, 2011, as amended at 81 FR 74586 and 74596, Oct. 26, 2016]

§ 52.941 Interstate pollutant transport provisions; What are the FIP requirements for decreases in emissions of sulfur dioxide?

(a) The owner and operator of each source and each unit located in the State of Kentucky and for which requirements are set forth under the CSAPR SO_2 Group 1 Trading Program in subpart CCCCC of part 97 of this chapter must comply with such requirements. The obligation to comply with such requirements will be eliminated by the promulgation of an approval by the Administrator of a revision to Kentucky's State Implementation Plan (SIP) as correcting the SIP's deficiency that is the basis for the CSAPR Federal Implementation Plan under § 52.39, except to the extent the Administrator's approval is partial or conditional.

(b) Notwithstanding the provisions of paragraph (a) of this section, if, at the time of the approval of Kentucky's SIP revision described in paragraph (a) of this section, the Administrator has already started recording any allocations of CSAPR SO_2 Group 1 allowances under subpart CCCCC of part 97 of this chapter to units in the State for a control period in any year, the provisions of subpart CCCCC of part 97 of this

chapter authorizing the Administrator to complete the allocation and recordation of CSAPR SO_2 Group 1 allowances to units in the State for each such control period shall continue to apply, unless provided otherwise by such approval of the State's SIP revision.

[76 FR 48366, Aug. 8, 2011, as amended at 81 FR 74586, Oct. 26, 2016]

Subpart T—Louisiana

§ 52.970 Identification of plan.

(a) *Purpose and scope.* This section sets forth the applicable State Implementation Plan (SIP) for Louisiana under section 110 of the Clean Air Act, 42 U.S.C. 7410, and 40 CFR part 51 to meet national ambient air quality standards.

(b) *Incorporation by reference.* (1) Material listed in paragraphs (c),(d) and (e) of this section with an EPA approval date prior to July 1, 1998, was approved for incorporation by reference by the Director of the Federal Register in accordance with 5 U.S.C. 552(a) and 1 CFR part 51. Material is incorporated as it exists on the date of the approval, and notice of any change in the material will be published in the FEDERAL REGISTER. Entries in paragraphs (c), (d) and (e) of this section with EPA approval dates after July 1, 1998, will be incorporated by reference in the next update to the SIP compilation.

(2) EPA Region 6 certifies that the rules/regulations provided by EPA in the SIP compilation at the addresses in paragraph (b)(3) of this section are an exact duplicate of the officially promulgated State rules/regulations which have been approved as part of the State Implementation Plan as of July 1, 1998.

(3) Copies of the materials incorporated by reference may be inspected at the Region 6 EPA Office at 1445 Ross Avenue, Suite 700, Dallas, Texas, 75202–2733; the EPA, Air and Radiation Docket and Information Center, Air Docket (6102), 401 M St., SW., Washington, DC 20460; or at the National Archives and Records Administration (NARA). For information on the availability of this material at NARA, call 202–741–6030, or go to: *http://www.archives.gov/federal_register/code_of_federal_regulations/ibr_locations.html.*

(c) *EPA approved regulations.*

EPA APPROVED LOUISIANA REGULATIONS IN THE LOUISIANA SIP

State citation	Title/subject	State approval date	EPA approval date	Comments
LAC Title 33. Environmental Quality Part III. Air				
Chapter 1—General Provisions				
Section 101	Authority, Matter Incorporated by Reference, and Permit Fee System.	Dec. 1987, LR13:741	3/8/1989, 54 FR 9795	Ref 52.999(c)(49)
Section 103	Scope and Severability of Air Regulations.	Dec. 1987, LR13:741	3/8/1989, 54 FR 9795	Ref 52.999(c)(49)
Section 107	Procedure for Handling Investigations, Complaints and Confidentiality.	Dec. 1987, LR13:741	3/8/1989, 54 FR 9795	Ref 52.999(c)(49)
Section 109	Necessary Changes for Approval of Compliance Schedules and Annual Report Requirements.	Dec. 1987, LR13:741	3/8/1989, 54 FR 9795	Ref 52.999(c)(49)
Section 111	Definitions	1/20/2008	8/29/2017, 82 FR 40949	
Chapter 2—Rules and Regulations for the Fee System of the Air Quality Control Programs				
Section 201	Scope and Purpose	10/20/1993	4/21/2016, 81 FR 23425	
Section 203	Authority	9/20/1988	4/21/2016, 81 FR 23425	
Section 205	Definitions	9/20/1988	4/21/2016, 81 FR 23425	
Section 207	Application Fees	2/20/2000	4/21/2016, 81 FR 23425	
Section 209	Annual Fees	2/20/2000	4/21/2016, 81 FR 23425	
Section 211	Methodology	4/20/2011	4/21/2016, 81 FR 23425	SIP does NOT include LAC 33:III.211.B.15.
Section 213	Determination of Fee	9/20/1988	4/21/2016, 81 FR 23425	

EPA APPROVED LOUISIANA REGULATIONS IN THE LOUISIANA SIP—Continued

State citation	Title/subject	State approval date	EPA approval date	Comments
Section 215	Method of Payment	10/20/2009	4/21/2016, 81 FR 23425	
Section 217	Late Payment	3/20/1999	4/21/2016, 81 FR 23425	
Section 219	Failure to Pay	3/20/1999	4/21/2016, 81 FR 23425	
Section 221	Effective Date	9/20/1988	4/21/2016, 81 FR 23425	
Chapter 5—Permit Procedures				
Section 501	Scope and Applicability	5/20/2011	8/4/2016, 81 FR 51341	The SIP does not include LAC 33:III.501.B.1.d. and LAC 33:III.501.B.2.d.i.(a).
Section 502	Definitions	5/20/2011	8/4/2016, 81 FR 51341	
Section 503	Minor Source Permit Requirements.	4/20/2011	8/4/2016, 81 FR 51341	
Section 504	Nonattainment New Source Review (NNSR) Procedures.	11/20/2012	8/4/2016, 81 FR 51341	The SIP does not include LAC 33:III.504.M.
Section 505	For Emissions Below PSD de minimis Levels.	Dec. 1987, LR13:741	3/8/1989, 54 FR 9795	Ref 52.999(c)(49)
			Correction 3/6/1992, 57 FR 08076	Ref 52.999(c)(58)
Section 506(A)	Clean Air Interstate Rule Requirements—Nitrogen Oxide Annual Program.	6/20/2008	4/17/2014, 79 FR 21631	
Section 506(B)	Clean Air Interstate Rule Requirements—Nitrogen Oxide Ozone Season Program.	6/20/2008	4/17/2014, 79 FR 21631	
Section 506(C)	Clean Air Interstate Rule Requirements—Annual Sulfur Dioxide.	6/20/2008	4/17/2014, 79 FR 21631	
Section 506(D)	Documentation	9/20/2006	9/28/2007, 72 FR 55064	
Section 506(E)	Modifications or Exceptions.	9/20/2006	9/28/2007, 72 FR 55064	
Section 507	Notification Requirement (for Emission Reduction).	Dec. 1987, LR13:741	3/8/1989, 54 FR 9795	Ref 52.999(c)(49)
Section 509	Prevention of Significant Deterioration.	3/20/2016	10/28/2016, 81 FR 74923	SIP does not include provisions for permitting of GHGs as effective on 4/20/2011 at LAC 33:III.509(B) definition of ''carbon dioxide equivalent emissions'', ''greenhouse gases'', ''major stationary source'', and ''significant''.
Section 511	Emission Reductions	11/20/1993	8/4/2016, 81 FR 51341	
Section 513	General Permits, Temporary Sources, and Relocation of Portable Facilities.	10/20/2006	8/4/2016, 81 FR 51341	The SIP does not include LAC 33:III.513.A.1.
Section 515	Oil and Gas Wells and Pipelines Permitting Provisions.	11/20/1993	8/4/2016, 81 FR 51341	
Section 517	Permit Applications and Submittal of Information.	12/20/1997	8/4/2016, 81 FR 51341	
Section 519	Permit Issuance Procedures for New Facilities, Initial Permits, Renewals and Significant Modifications.	11/20/1993	8/4/2016, 81 FR 51341	The SIP does not include LAC 33:III.519.C.
Section 521	Administrative Amendments.	5/20/2005	8/4/2016, 81 FR 51341	
Section 523	Procedures for Incorporating Test Results.	4/20/2011	8/4/2016, 81 FR 51341	

EPA APPROVED LOUISIANA REGULATIONS IN THE LOUISIANA SIP—Continued

State citation	Title/subject	State approval date	EPA approval date	Comments
Section 525	Minor Modifications	11/20/1993	5/31/2017, 82 FR 24862	The SIP does not include LAC 33:III.525.A.2., B.2.c, B.3., B.4, B.5.a.–d., B.6., B.7., and B.8.
Section 527	Significant Modifications	11/20/1994	5/31/2017, 82 FR 24862	The SIP does not include LAC 33:III. 527.B.5.
Section 529	Reopenings for Cause	11/20/1993	5/31/2017, 82 FR 24862	The SIP does not include LAC 33:III.529.B., B.1., B.2., B.3., and B.4.
Section 531	Public Notice and Affected State Notice.	10/20/2006	5/31/2017, 82 FR 24862	The SIP does not include LAC 33:III.531.A.1., A.2., A.3., A.4., B.1.a., B.1.b., and B.1.c.
Chapter 6—Regulations on Control of Emissions Reduction Credits Banking				
Section 601	Purpose	11/20/2012	8/4/2016, 81 FR 51341	
Section 603	Applicability	11/20/2012	8/4/2016, 81 FR 51341	
Section 605	Definitions	11/20/2012	8/4/2016, 81 FR 51341	
Section 607	Determination of Creditable Emission Reductions.	11/20/2012	8/4/2016, 81 FR 51341	
Section 613	ERC Balance Sheet	10/20/2007	11/5/2015, 80 FR 68451	
Section 615	Schedule for Submitting Applications.	11/20/2012	8/4/2016, 81 FR 51341	
Section 617	Procedures for Review and Approval of ERCs.	Feb. 2002, LR 28:304	9/27/2002, 67 FR 60877	
Section 619	Emission Reduction Credit Bank.	11/20/2012	8/4/2016, 81 FR 51341	
Chapter 7—Ambient Air Quality				
Section 701	Purpose	3/20/2008	1/28/2016, 81 FR 4891	
Section 703	Scope	3/20/2008	1/28/2016, 81 FR 4891	
Section 705	Standards: Description of Ambient Air Quality Standards.	Dec. 1987, LR13:741	3/8/1989, 54 FR 9795	Ref 52.999(c)(49).
Section 707	Degradation of Ambient Air Having Higher Quality than Set Forth in these Sections Restricted.	Dec. 1987, LR13:741	3/8/1989, 54 FR 9795	Ref 52.999(c)(49).
Section 709	Measurement of Concentrations PM_{10}, SO_2, CO, Atmospheric Oxidants, NO_X, and Pb.	9/20/2006	7/5/2011, 76 FR 38977	Ref 52.999(c)(50).
Section 711	Tables 1, 1a, and 2—Air Quality.	9/20/2006	7/5/2011, 76 FR 38977	$PM_{2.5}$ and PM_{10} standards.
Chapter 9—General Regulations on Control of Emissions and Emission Standards				
Section 901	Purpose	Dec. 1987, LR13:741	3/8/1989, 54 FR 9795	Ref 52.999(c)(49)
Section 903	Scope	Dec. 1987, LR13:741	3/8/1989, 54 FR 9795	Ref 52.999(c)(49)
Section 905	Control Facilities to be Installed When Feasible.	Dec. 1987, LR13:741	3/8/1989, 54 FR 9795	Ref 52.999(c)(49)
Section 909	Responsible Person to have Test Made.	Dec. 1987, LR13:741	3/8/1989, 54 FR 9795	Ref 52.999(c)(49)
Section 911	Department May Make Tests.	Dec. 1987, LR13:741	3/8/1989, 54 FR 9795	Ref 52.999(c)(49)
Section 913	New Sources to Provide Sampling Ports.	Dec. 1987, LR13:741	3/8/1989, 54 FR 9795	Ref 52.999(c)(49)
Section 915	Emission Monitoring Requirements: Applicability, Special Considerations, Exemptions, and Circumvention.	Dec. 1987, LR13:741	3/8/1989, 54 FR 9795	Ref 52.999(c)(49)

EPA APPROVED LOUISIANA REGULATIONS IN THE LOUISIANA SIP—Continued

State citation	Title/subject	State approval date	EPA approval date	Comments
Section 917	Variances	Dec. 1987, LR13:741	3/8/1989, 54 FR 9795	Ref 52.999(c)(49)
Section 918	Recordkeeping and Annual Reporting.	10/20/2007	1/28/2016, 81 FR 4891	
Section 919	Emission Inventory	10/20/2007	1/28/2016, 81 FR 4891	
Section 921	Stack Heights	Dec. 1987, LR13:741	3/8/1989, 54 FR 9795	Ref 52.999(c)(49)
Section 923	Maintenance of Pay	Dec. 1987, LR13:741	3/8/1989, 54 FR 9795	Ref 52.999(c)(49)
Section 925	Mass Emission Rate Control Plan.	Dec. 1987, LR13:741	3/8/1989, 54 FR 9795	Ref 52.999(c)(49)
Section 927	Notification Required (Emergency Occurrences).	Dec. 1987, LR13:741	3/8/1989, 54 FR 9795	Ref 52.999(c)(49)
Section 929	Violation of Emission Regulation Cannot be Authorized.	Dec. 1987, LR13:741	3/8/1989, 54 FR 9795	Ref 52.999(c)(49)
Chapter 11—Control of Emissions From Smoke				
Section 1101	Control of Air Pollution from Smoke: Purpose and Control of Smoke.	Dec. 1987, LR13:741	3/8/1989, 54 FR 9795	Ref 52.999(c)(49).
Section 1101.A	Control of Air Pollution from Smoke. Purpose.	10/20/1995	7/5/2011, 76 FR 38977	
Section 1103	Impairment of Visibility on Public Roads Prohibited.	Dec. 1987, LR13:741	3/8/1989, 54 FR 9795	Ref 52.999(c)(49)
Section 1105.A	Smoke from Flaring Shall Not Exceed 20 Percent Opacity.	10/20/2007	1/28/2016, 81 FR 4891	
Section 1107.A	Exemptions	10/20/2007	1/28/2016, 81 FR 4891	Administrative change here; 1107(A) is subject to SIP Call.
Section 1109	Stack Heights	Dec. 1987, LR13:741	3/8/1989, 54 FR 9795	Ref 52.999(c)(49).
Section 1109.A	Control of Air Pollution from Outdoor Burning.	10/20/1995	7/5/2011, 76 FR 38977	
Section 1109.B	Control of Air Pollution from Outdoor Burning.	4/20/1998	7/5/2011, 76 FR 38977	
Section 1109.E.–ll09.F.	Control of Air Pollution from Outdoor Burning.	4/20/1998	7/5/2011, 76 FR 38977	
Section 1111	Exclusion: Variance, Unpopulated Areas and Water Vapor.	Dec. 1987, LR13:741	3/8/1989, 54 FR 9795	Ref 52.999(c)(49)
Chapter 13—Emission Standards for Particulate Matter				
Subchapter A	General			
Section 1301	Emission Standards for Particulate Matter.	Jun 1988, LR14:348	6/15/1989, 54 FR 25451	Ref 52.999(c)(50)
Section 1303.A	Toxic Substances	10/20/1995	7/5/2011, 76 FR 38977	
Section 1305	Control of Fugitive Emissions.	Jun 1988, LR14:348	6/15/1989, 54 FR 25451	Ref 52.999(c)(50)
Section 1307	Degradation	Dec. 1987, LR13:741	3/8/1989, 54 FR 9795	Ref 52.999(c)(49)
Section 1309	Measurements of Concentrations.	Dec. 1987, LR13:741	3/8/1989, 54 FR 9795	Ref 52.999(c)(49)
Subchapter B	Fluid Catalytic Cracking Units			
Section 1311.C.–1311.D.	Emission Limits	6/20/1997	7/5/2011, 76 FR 38977	
Subchapter C	Fuel Burning Equipment			
Section 1313	Emissions from Fuel Burning Equipment.	Jun 1988, LR14:348	6/15/1989, 54 FR 25451	Ref 52.999(c)(50)
Section 1315	More Stringent Regulations may be Prescribed if Particulates are Toxic.	Jun 1988, LR14:348	6/15/1989, 54 FR 25451	Ref 52.999(c)(50)
Section 1317	Exclusions	Dec. 1987, LR13:741	3/8/1989, 54 FR 9795	Ref 52.999(c)(49)
Subchapter D	Refuse Incinerators	10/20/1994	7/5/2011, 76 FR 38977	

EPA APPROVED LOUISIANA REGULATIONS IN THE LOUISIANA SIP—Continued

State citation	Title/subject	State approval date	EPA approval date	Comments
Section 1319	Refuse Incinerators	10/20/1994	7/5/2011, 76 FR 38977	
Subchapter E	Leadened Particulate Matter			
Section 1321	Emission Standards for Leaded Particulate Matter.	Dec. 1987, LR13:741	3/8/1989, 54 FR 9795	Ref 52.999(c)(49)
Table 3	Allowable Rate of Emissions Based on Process Weight Rate.	Dec. 1987, LR13:741	3/8/1989, 54 FR 9795	Ref 52.999(c)(49)
Subchapter F—Abrasive Blasting				
Section 1323	Emissions from Abrasive Blasting.	1/17/2012	1/28/2016, 81 FR 4891	
Section 1325	Definitions	5/20/2007	1/28/2016, 81 FR 4891	
Section 1327	Blasting Operations	7/20/2009	1/28/2016, 81 FR 4891	
Section 1329	Performance Standard	5/20/2007	1/28/2016, 81 FR 4891	
Section 1331	Best management Practices (BMP) Plans.	5/20/2007	1/28/2016, 81 FR 4891	
Section 1333	Recordkeeping and Reporting.	7/20/2009	1/28/2016, 81 FR 4891	
Chapter 14—Conformity				
Subchapter A	Determining Conformity of General Federal Actions to State or Federal Implementations Plans			
Section 1401	Purpose	Nov. 1994, LR20:1268	9/13/1996, 61 FR 48409	Ref 52.999(c)(67)
Section 1402	Scope	Nov. 1994, LR20:1268	9/13/1996, 61 FR 48409	Ref 52.999(c)(67)
Section 1403	Prohibition	Nov. 1994, LR20:1268	9/13/1996, 61 FR 48409	Ref 52.999(c)(67)
Section 1404	Definitions	Nov. 1994, LR20:1268	9/13/1996, 61 FR 48409	Ref 52.999(c)(67)
Section:				
1405	Applicability	Nov. 1994, LR20:1268	9/13/1996, 61 FR 48409	Ref 52.999(c)(67)
1405.B		6/20/1997, LR23:720	3/9/1998, 63 FR 11372	Ref 52.999(c)(75)
Section 1406	Conformity Analysis	Nov. 1994, LR20:1268	9/13/1996, 61 FR 48409	Ref 52.999(c)(67)
Section 1407	Reporting Requirements	Nov. 1994, LR20:1268	9/13/1996, 61 FR 48409	Ref 52.999(c)(67)
Section 1408	Public Participation	Nov. 1994, LR20:1268	9/13/1996, 61 FR 48409	Ref 52.999(c)(67)
Section 1409	Frequency of Conformity Determinations.	Nov. 1994, LR20:1268	9/13/1996, 61 FR 48409	Ref 52.999(c)(67)
Section 1410.A.5.a.i	Criteria for Determining Conformity of General Federal Actions.	10/20/2007	1/28/2016, 81 FR 4891	
Section 1411	Procedures for Conformity Determinations of General Federal Actions.	Nov. 1994, LR20:1268	9/13/1996, 61 FR 48409	Ref 52.999(c)(67)
Section 1412	Mitigation of Air Quality Impacts.	Nov. 1994, LR20:1268	9/13/1996, 61 FR 48409	Ref 52.999(c)(67)
Section 1413	Department Review	Nov. 1994, LR20:1268	9/13/1996, 61 FR 48409	Ref 52.999(c)(67)
Section 1414	Enforcement Provisions	Nov. 1994, LR20:1268	9/13/1996, 61 FR 48409	Ref 52.999(c)(67)
Section 1415	Savings Provision	Nov. 1994, LR20:1268	9/13/1996, 61 FR 48409	Ref 52.999(c)(67)
Subchapter B	Conformity to State or Federal Implementation Plans of Transportation Plans, Programs, and Projects Developed, Funded, or Approved under Title 23 U.S.C. or the Federal Transit Act			
Section 1431	Purpose	Sept. 1998, LR24:1684	12/29/1999, 64 FR 72938	
Section 1432	Incorporation by Reference.	March 20, 2005, LR31:640	10/30/2006, 71 FR 63250	
Section 1434	Consultation	10/20/2007	1/28/2016, 81 FR 4891	
Chapter 15—Emission Standards for Sulfur Dioxide				
Section 1501	Degradation of Existing Emission Quality Restricted.	Apr. 1992, LR18:374	7/15/1993, 58 FR 38060	Ref 52.999(c)(59)
Section 1503	Emission Standards for Sulfur Dioxide. Emission Limitations.	7/20/1998	7/5/2011, 76 FR 38977	
Section 1505	Variance	Apr. 1992, LR18:374	7/15/1993, 58 FR 38060	Ref 52.999(c)(59)

EPA APPROVED LOUISIANA REGULATIONS IN THE LOUISIANA SIP—Continued

State citation	Title/subject	State approval date	EPA approval date	Comments
Section 1507	Exceptions, Startup provisions, Online Operating Adjustments, and Bubble Concept.	Apr. 1992, LR18:374	7/15/1993, 58 FR 38060	Ref 52.999(c)(59)
Section 1509	Reduced Sulfur Compounds (New and Existing Sources).	Apr. 1992, LR18:374	7/15/1993, 58 FR 38060	Ref 52.999(c)(59)
Section 1511.B	Continuous Emission Monitoring.	12/20/1996	7/5/2011, 76 FR 38977	
Section 1513	Recordkeeping and Reporting.	Apr. 1992, LR18:374	7/15/1993, 58 FR 38060	Ref 52.999(c)(59)
Table 4	Emissions—Methods of Contaminant Measurement.	Apr. 1992, LR18:374	7/15/1993, 58 FR 38060	Ref 52.999(c)(59)
Chapter 17—Control of Emissions of Carbon Monoxide (New Sources)				
Subchapter A	General			
Section 1701	Degradation of Existing Emission Quality Restricted.	Dec. 1987, LR13:741	3/8/1989, 54 FR 9795	Ref 52.999(c)(49)
Subchapter B	Ferrous Metal Emissions			
Section 1703	Ferrous Metal Emissions	Dec. 1987, LR13:741	3/8/1989, 54 FR 9795	Ref 52.999(c)(49)
Subchapter C	Petroleum Refinery Emissions			
Section 1705	Petroleum Refinery Emissions.	Dec. 1987, LR13:741	3/8/1989, 54 FR 9795	Ref 52.999(c)(49)
Chapter 21—Control of Emissions of Organic Compounds				
Subchapter A	General			
Section 2101	Compliance Schedules	Nov. 1990, LR16:959	5/5/1994, 59 FR 23166	Ref 52.999(c)(60)
Section 2103	Storage of Volatile Organic Compounds.	10/20/2010	8/29/2017, 82 FR 40949	2103.E.3 is not included in the SIP.
Section 2104.A	Crude Oil and Condensate.	4/20/2004	7/5/2011, 76 FR 38977	
Section 2104.B.–2104.C.1.	Crude Oil and Condensate.	11/20/1997	7/5/2011, 76 FR 38977	
Section 2104.C.2.–2104.C.4.	Crude Oil and Condensate.	4/20/2004	7/5/2011, 76 FR 38977	
Section 2104.D	Crude Oil and Condensate.	11/20/1997	7/5/2011, 76 FR 38977	
Section 2104.E	Crude Oil and Condensate.	4/20/2004	7/5/2011, 76 FR 38977	
Section 2104.F.–2104.F.2.d.	Crude Oil and Condensate.	11/20/1997	7/5/2011, 76 FR 38977	
Section 2104.G	Crude Oil and Condensate.	11/20/1997	7/5/2011, 76 FR 38977	
Section 2105	Storage of Volatile Organic Components (Small Tanks).			NOT IN SIP
Section 2107	Volatile Organic Compounds—Loading.	9/20/2008	8/29/2017, 82 FR 40949	E.1.b., E.1.d. and E.1.e. have not been submitted for approval into the SIP.
Section 2108	Marine Vapor Recovery	9/20/2008	8/29/2017, 82 FR 40949	
Section 2109.C,1–4	Oil/Water—Separation	12/20/1996	7/5/2011, 76 FR 38977	
Section 2111	Pumps and Compressors	Apr. 1991, LR17:360	5/5/1994, 59 FR 23166	Ref 52.999(c)(60)
Section 2113.A	Housekeeping	5/20/1999	7/5/2011, 76 FR 38977	
Section 2113.A.4	Housekeeping	10/20/2007	1/28/2016, 81 FR 4891	
Section 2115	Waste Gas Disposal Introductory paragraph.	4/20/2004	7/5/2011, 76 FR 38977	
Section 2115.A.–2115.G.	Waste Gas Disposal	2/20/1998	7/5/2011, 76 FR 38977	
Section 2115.H.1.a	Waste Gas Disposal	4/20/2004	7/5/2011, 76 FR 38977	

EPA APPROVED LOUISIANA REGULATIONS IN THE LOUISIANA SIP—Continued

State citation	Title/subject	State approval date	EPA approval date	Comments
Section 2115.H.2.–2115.H.3.	Waste Gas Disposal	2/20/1998	7/5/2011, 76 FR 38977	
Section 2115.I.1–4	Waste Gas Disposal	12/20/1996	7/5/2011, 76 FR 38977	
Section 2115.J	Waste Gas Disposal	4/20/2004	7/5/2011, 76 FR 38977	
Section 2115.K.4	Waste Gas Disposal	2/20/1998	7/5/2011, 76 FR 38977	
Section 2115.M	Waste Gas Disposal	2/10/1998	7/5/2011, 76 FR 38977	
Section 2116	Glycol Dehydrators	10/20/2007	1/28/2016, 81 FR 4891	
Section 2117	Exemptions	2/20/1999	7/5/2011, 76 FR 38977	
Section 2119	Variances	Feb. 1990, LR16:116	5/5/1994, 59 FR 23166	Ref 52.999(c)(60)
Section 2121.A	Fugitive Emission Control	1/20/2008	8/29/2017, 82 FR 40949	
Section 2121.B.1	Fugitive Emission Control	8/20/2004	7/5/2011, 76 FR 38977	
Section 2121.C.1.a.ii.	Fugitive Emission Control	7/20/2000	7/5/2011, 76 FR 38977	
Section 2121.C.3.b.–2121.C.3.c.	Fugitive Emission Control	8/20/2004	7/5/2011, 76 FR 38977	
Section 2121.C.4.h.i	Fugitive Emission Control	1/20/1998	7/5/2011, 76 FR 38977	
Section 2121.D.1	Fugitive Emission Control	12/20/1995	7/5/2011, 76 FR 38977	
Section 2121.F	Fugitive Emission Control	10/20/2007	1/28/2016, 81 FR 4891	
Section 2121.G	Fugitive Emission Control	8/20/2004	7/5/2011, 76 FR 38977	
Section 2122.A.–2122A.1.	Fugitive Emission Control for Ozone Nonattainment Areas.	8/20/2004	7/5/2011, 76 FR 38977	
Section 2122.A.2–A.5.	Fugitive Emission Control for Ozone Nonattainment Areas.	8/20/2002	7/5/2011, 76 FR 38977	
Section 2122A.6–6.d.	Fugitive Emission Control for Ozone Nonattainment Areas.	7/20/1998	7/5/2011, 76 FR 38977	
Section 2122B	*Fugitive Emission Control for Ozone Nonattainment Areas Definitions.*	*11/20/1996*	7/5/2011, 76 FR 38977	*Inaccessible Valve/Connector.*
Section 2122B	*Fugitive Emission Control for Ozone Nonattainment Areas Definitions.*	*12/20/1996*	7/5/2011, 76 FR 38977	*Good Performance Level.*
Section 2122B	*Fugitive Emission Control for Ozone Nonattainment Areas Definitions.*	*8/20/2004*	7/5/2011, 76 FR 38977	*Instrumentation System.*
Section 2122C.1.a.–2122.C.1.b.	Fugitive Emission Control for Ozone Nonattainment Areas.	8/20/2004	7/5/2011, 76 FR 38977	
Section 2122.C.1.c	Fugitive Emission Control for Ozone Nonattainment Areas.	11/20/1996	7/5/2011, 76 FR 38977	
Section 2122.C.1.d	Fugitive Emission Control for Ozone Nonattainment Areas.	7/20/1998	7/5/2011, 76 FR 38977	
Section 2122.C.4	Fugitive Emission Control for Ozone Nonattainment Areas and Specified Parishes.	8/20/2004	7/5/2011, 76 FR 38977	
Section 2122.D.1.a	Fugitive Emission Control for Ozone Nonattainment Areas.	11/20/1996	7/5/2011, 76 FR 38977	
Section 2122.D.1.d–f.	Fugitive Emission Control for Ozone Nonattainment Areas and Specified Parishes.	8/20/2004	7/5/2011, 76 FR 38977	
Section 2122.D.3.b	Fugitive Emission Control for Ozone Nonattainment Areas.	8/20/2004	7/5/2011, 76 FR 38977	
Section 2122.D.3.d	Fugitive Emission Control for Ozone Nonattainment Areas.	11/20/1996	7/5/2011, 76 FR 38977	
Section 2122.D.3.e	Fugitive Emission Control for Ozone Nonattainment Areas and Specified Parishes.	8/20/2004	7/5/2011, 76 FR 38977	
Section 2122.D.4.h	Fugitive Emission Control for Ozone Nonattainment Areas.	1/20/1998	7/5/2011, 76 FR 38977	

EPA APPROVED LOUISIANA REGULATIONS IN THE LOUISIANA SIP—Continued

State citation	Title/subject	State approval date	EPA approval date	Comments
Section 2122.D.4.k.–1.	Fugitive Emission Control for Ozone Nonattainment Areas.	11/20/1996	7/5/2011, 76 FR 38977	
Section 2122.E.1.g	Fugitive Emission Control for Ozone Nonattainment Areas and Specified Parishes.	8/20/2004	7/5/2011, 76 FR 38977	
Section 2122.E.3.–5	Fugitive Emission Control for Ozone Nonattainment Areas and Specified Parishes.	8/20/2004	7/5/2011, 76 FR 38977	
Section 2122.G	Fugitive Emission Control for Ozone Nonattainment Areas and Specified Parishes.	10/20/2007	1/28/2016, 81 FR 4891	
Subchapter B	Organic Solvents			
Section 2123	Organic Solvents	4/20/2011	12/2/2011, 76 FR 75467	Revisions to Section 2123 approved in the Louisiana Register April 20, 2011 (LR 37:1150).
Section 2123.B.1	Organic Solvents	7/20/1999	7/5/2011, 76 FR 38977	
Section 2123.B.2	Organic Solvents	1/20/1998	7/5/2011, 76 FR 38977	
Section 2123.C	Organic Solvents	1/20/1998	7/5/2011, 76 FR 38977	
Section 2123.C.11 ..	Organic Solvents	5/20/1996	7/5/2011, 76 FR 38977	
Section 2123.C.11.b	Organic Solvents	12/20/1997	7/5/2011, 76 FR 38977	
Section 2123.D.1	Organic Solvents	10/20/2007	1/28/2016, 81 FR 4891	
Section 2123.D.6	Organic Solvents	8/20/2002	7/5/2011, 76 FR 38977	
Section 2123.D.7.a	Organic Solvents	4/20/2004	7/5/2011, 76 FR 38977	
Section 2123.E.1.–4	Fugitive Emission Control for Ozone Nonattainment Areas and Specified Parishes.	12/20/1996	7/5/2011, 76 FR 38977	
Section 2123.E.6	Organic Solvents	7/20/1998	7/5/2011, 76 FR 38977	
Section 2123.G	Organic Solvents Definitions.	12/20/1997	7/5/2011, 76 FR 38977	
Section 2123.G	Organic Solvents Definitions.	1/20/1998	7/5/2011, 76 FR 38977	
Section 2123.H	Organic Solvents	4/20/2004	7/5/2011, 76 FR 38977	
Subchapter C Solvent Degreasers				
Section 2125	Solvent Degreasers	1/20/2008	8/29/2017, 82 FR 40949	
Subchapter D	Cutback Paving Asphalt			
Section 2127	Cutback Paving Asphalt	Apr. 1991, LR17:360	5/5/1994, 59 FR 23166	Ref 52.999(c)(60)
Subchapter F Gasoline Handling				
Section 2131	Filling of Gasoline Storage Vessels.	7/20/2010	8/29/2017, 82 FR 40949	
Section 2132	Stage II Vapor Recovery Systems for Control of Vehicle Refueling Emissions at Gasoline Dispensing Facilities.	4/20/2011	8/29/2017, 82 FR 40949	This rule is approved for fueling/refueling of only 100% ORVR vehicles.
Subchapter G	Petroleum Refinery Operations			
Section 2139.C	Refinery Vacuum Producing Systems.	5/20/1998	7/5/2011, 76 FR 38977	
Section 2141	Refinery Process Unit Turnarounds.	Jul. 1991, LR17:654	5/5/1994, 59 FR 23166	Ref 52.999(c)(60)
Subchapter H	Graphic Arts			

EPA APPROVED LOUISIANA REGULATIONS IN THE LOUISIANA SIP—Continued

State citation	Title/subject	State approval date	EPA approval date	Comments
Section 2143	Graphic Arts (Printing) by Rotogravure and Flexographic Processes. Control Requirements.	6/20/2009	12/2/2011, 76 FR 75467	Revisions to Section 2143 approved in the Louisiana Register June 20, 2009 (LR 35:1101).
Section 2143.A	Graphic Arts (Printing) by Rotogravure and Flexographic Processes. Control Requirements.	4/20/2004	7/5/2011, 76 FR 38977	
Section 2143.A.1	Graphic Arts (Printing) by Rotogravure and Flexographic Processes. Control Requirements.	10/20/1999	7/5/2011, 76 FR 38977	
Section 2143.B	Applicability Exemption	4/20/2004	7/5/2011, 76 FR 38977	
Section 2143.C.1.–3	Compliance	12/20/1996	7/5/2011, 76 FR 38977	
Section 2143.E	Timing	4/20/2004	7/5/2011, 76 FR 38977	
Subchapter I Pharmaceutical Manufacturing Facilities				
Section 2145	Pharmaceutical Manufacturing Facilities.	1/20/2008	8/29/2017, 82 FR 40949	
Subchapter J Limiting Volatile Organic Compound (VOC) Emissions From Reactor Processes and Distillation Operations in the Synthetic Organic Chemical Manufacturing Industry (SOCMI)				
Section 2147	Limiting VOC Emissions from SOCMI Reactor Processes and Distillation Operations.	1/20/2008	8/29/2017, 82 FR 40949	
Subchapter K	Limiting Volatile Organic Compound Emissions from Batch Processing			
Section 2149.A.1	Applicability	4/20/2004	7/5/2011, 76 FR 38977	
Section 2149.E.2.a.–c.i.	Performance Testing	12/20/1996	7/5/2011, 76 FR 38977	
Subchapter L	Limiting Volatile Organic Compound Emissions from Cleanup Solvent Processing			
Section 2151.A	Limiting Volatile Organic Compound Emissions from Cleanup Solvent Processing.	4/20/2004	7/5/2011, 76 FR 38977	
Section 2151.B., 2151.C., 2151.C.2–C.3., 2151.D.–E.	*Limiting Volatile Organic Compound Emissions from Cleanup Solvent Processing.*	*1/20/1998*	7/5/2011, 76 FR 38977	*Closed-Loop Recycling; Cleaning of Parts.*
Section 2151.F	Limiting Volatile Organic Compound Emissions from Cleanup Solvent Processing.	4/20/2004	7/5/2011, 76 FR 38977	
Subchapter M	Limiting Volatile Organic Compound Emissions from Industrial Wastewater			
Section 2153.A	*Definitions*	*5/20/1999*	7/5/2011, 76 FR 38977	*Chemical Manufacturing Process Unit; Plant; Point of Determination; Properly Operated Biotreatment Unit.*
Section 2153.A	*Definitions*	*4/20/2004*	7/5/2011, 76 FR 38977	*Affected Source Category.*
Section 2153.B., 2153.B.1.d. –d.ii., 2153.B.3.–4.b.	Control Requirements	5/20/1999	7/5/2011, 76 FR 38977	
Section 2153.D.2.c., 2153.D.3.h.iii.(b)–4.b.	Inspection and Monitoring Requirements.	5/20/1999	7/5/2011, 76 FR 38977	
Section 2153.E.1.–5	Approved Test Methods	12/20/1996	7/5/2011, 76 FR 38977	

EPA APPROVED LOUISIANA REGULATIONS IN THE LOUISIANA SIP—Continued

State citation	Title/subject	State approval date	EPA approval date	Comments
Section 2153.E.7.–10.	Approved Test Methods	5/20/1999	7/5/2011, 76 FR 38977	
Section 2153.F.5	Recordkeeping Requirements.	5/20/1999	7/5/2011, 76 FR 38977	
Section 2153.G.4.b–c.	Limiting Volatile Organic Compound Emissions from Industrial Wastewater.	10/20/2007	1/28/2016, 81 FR 4891	
Section 2153.G.5.a–c.	Limiting Volatile Organic Compound Emissions from Industrial Wastewater.	10/20/2007	1/28/2016, 81 FR 4891	
Section 2153.H.1	Determination of Wastewater Characteristics.	5/20/1999	7/5/2011, 76 FR 38977	
Section 2153.I	Limiting VOC Emissions From Industrial Wastewater.	4/20/2004	7/5/2011, 76 FR 38977	
Table 8	Untitled [List of Synthetic Organic Chemicals].	Dec. 1987, LR13:741	5/5/1994, 59 FR 23166	Ref 52.999(c) (49) and (60). Table approved at (c)(49) included CAS numbers. Table approved at (c)(60) did not include CAS numbers
Subchapter N. Method 43 Capture Efficiency Test Procedures				
Subchapter N	Subchapter N	12/20/1996	7/5/2011, 76 FR 38977	
Section 2155	Principle	12/20/1996	7/5/2011, 76 FR 38977	
Section 2156.A	*Definitions*	*12/20/1997*	7/5/2011, 76 FR 38977	*PTE; TTE.*
Section 2156.A	*Definitions*	*10/20/2003*	7/5/2011, 76 FR 38977	*BE.*
Section 2157.A	Applicability	12/20/1997	7/5/2011, 76 FR 38977	
Section 2157.B	Applicability	8/20/2001	7/5/2011, 76 FR 38977	
Section 2158	Specific Requirements	12/20/1996	7/5/2011, 76 FR 38977	
Section 2158.C.1.–4	Specific Requirements	8/20/2001	7/5/2011, 76 FR 38977	
Section 2159.A–C	Recordkeeping and Reporting.	10/20/2007	1/28/2016, 81 FR 4891	
Section 2159.D.–E	Recordkeeping and Reporting.	8/20/2001	7/5/2011, 76 FR 38977	
Section 2160	Procedures	12/20/1996	7/5/2011, 76 FR 38977	
Section 2160.A.–2160.B.	Procedures	8/20/2001	7/5/2011, 76 FR 38977	
Section 2160.C.4.d	Procedures	7/20/1998	7/5/2011, 76 FR 38977	
Section 2160.D.4.d	Procedures	7/20/1998	7/5/2011, 76 FR 38977	
Section 2199	Appendix A	11/20/1997	7/5/2011, 76 FR 38977	
Chapter 22—Control of Emissions of Nitrogen Oxides (NO_X)				
Section 2201	Affected Facilities in the Baton Rouge Nonattainment Area and the Region of Influence.	1/20/2008	8/29/2017, 82 FR 40949	
Section 2202	Contingency Plan	1/20/2010	11/30/2011, 76 FR 74000	Section 2202 approved in the Louisiana Register January 20, 2010 (LR 36:63).
Chapter 23—Control of Emissions from Specific Industries				
Subchapter A	Chemical Woodpulping Industry			
Section 2301.D. and 2301.D.3.	Control of Emissions from the Chemical Woodpulping Industry. Emission Limitations.	12/20/1993	7/5/2011, 76 FR 38977	
Section 2301.D.4.a	Control of Emissions From Chemical Woodpulping Industry. Compliance.	10/20/2007	1/28/2016, 81 FR 4891	

EPA APPROVED LOUISIANA REGULATIONS IN THE LOUISIANA SIP—Continued

State citation	Title/subject	State approval date	EPA approval date	Comments
Section 2301.E	Exemptions	10/20/2006	7/5/2011, 76 FR 38977	
Subchapter B	Aluminum Plants			
Section 2303.E	Standards for Horizontal Stud Soderberg Primary Aluminum Plants and Prebake Primary Aluminum Plants. Monitoring.	10/20/2007	1/28/2016, 81 FR 4891	
Section 2303.F.1.d.2.	Standards for Horizontal Study Doderberg Primary Aluminum Plants and Prebake Primary Aluminum Plants. Reporting.	10/20/2005	7/5/2011, 76 FR 38977	
Subchapter C	Phosphate Fertilizer Plants			
Section 2305	Fluoride Emissions Standards for Phosphate Fertilizer Plants.	Dec. 1987, LR13:741	3/8/1989, 54 FR 9795	Ref 52.999(c)(49)
Subchapter D	Emission Standards for the Nitric Acid Industry			
Section 2307.C.1.a	Start-Up Provisions	10/20/2007	1/28/2016, 81 FR 4891	Administrative change here; 2307(C)(1) is subject to SIP Call.
Section 2307.C.2.a	On-Line Operating Adjustments.	10/20/2007	1/28/2016, 81 FR 4891	Administrative change here; 2307(C)(2) is subject to SIP Call.
Chapter 25—Miscellaneous Incinerator Rules				
Section 2511	Standards of Performance for Biomedical Waste Incinerators.	1/20/2008	8/29/2017, 82 FR 40949	
Section 2521	Refuse Incinerators	1/20/2008	8/29/2017, 82 FR 40949	
Section 2531	Standards of Performance for Crematories.	1/20/2008	8/29/2017, 82 FR 40949	
Chapter 30. Standards of Performance from New Stationary Sources (NSPS)				
Chapter 30	Standards of Performance from New Stationary Sources (NSPS).	12/20/1996	7/5/2011, 76 FR 38977	
Section 3001	Repeal and Renumbering.	12/20/1996	7/5/2011, 76 FR 38977	
Subchapter A. Incorporation by Reference				
Section 3003	IBR 40 Code of Federal Regulations (CFR) Part 60.	12/20/2006	7/5/2011, 76 FR 38977	
Chapter 56—Prevention of Air Pollution Emergency Episodes				
Section 5601	Purpose	Dec. 1987, LR13:741	3/8/1989, 54 FR 9795	Ref 52.999(c)(49)
Section 5603	Scope	Dec. 1987, LR13:741	3/8/1989, 54 FR 9795	Ref 52.999(c)(49)
Section 5605	Episode Criteria and Air Pollution Forecast.	Dec. 1987, LR13:741	3/8/1989 54 FR 9795	Ref 52.999(c)(49)
Section 5607	Administrative Authority Will Determine When Criteria Level Has Been Reached.	Dec. 1987, LR13:741	3/8/1989, 54 FR 9795	Ref 52.999(c)(49)
Section 5609	Preplanning Strategies Required: Alert Level, Warning Level, and Emergency Level.	Jun. 1988, LR14:348	6/15/1989, 54 FR 25451	Ref 52.999(c)(50)

EPA APPROVED LOUISIANA REGULATIONS IN THE LOUISIANA SIP—Continued

State citation	Title/subject	State approval date	EPA approval date	Comments
Section 5611	Standby Plans to be Submitted When Requested by Administrative Authority.	Dec. 1987, LR13:741	3/8/1989, 54 FR 9795	Ref 52.999(c)(49)
Table 5	Emission Reduction Plans—Alert Level.	Dec. 1987, LR13:741	3/8/1989, 54 FR 9795	Ref 52.999(c)(49)
Table 6	Emission Reduction Plans—Warning Level.	Dec. 1987, LR13:741	3/8/1989, 54 FR 9795	Ref 52.999(c)(49)
Table 7	Emission Reduction Plans—Emergency Level.	Dec. 1987, LR13:741	3/8/1989, 54 FR 9795	Ref 52.999(c)(49)
Chapter 63—Test Methods—LESHAP Division's Source Test Manual				
6301 to 6401	40 CFR 61, Appendix B Test Methods.	Dec. 1987, LR13:741	3/8/1989, 54 FR 9795	Ref 52.999(c)(49)
LAC Title 55. Part III. Motor Vehicles, Chapter 8. Motor Vehicle Inspections				
Subchapter A	General			
Section 801	Definitions	Dec. 1999, LR 25:2421	9/26/2002, 67 FR 60594	
Section 803	Forward	Dec. 1999, LR 25:2421	9/26/2002, 67 FR 60594	
Subchapter B	Safety Inspections			
Section 805	Requirements, Duties, Responsibilities.	Dec. 2001, LR 27:2260	9/26/2002, 67 FR 60594	
Section 807	Operation as an Official Motor Vehicle Inspection Station.	Dec. 2001, LR 27:2260	9/26/2002, 67 FR 60594	
Section 809	General Inspection Requirements.	Dec. 1999, LR 25:2426	9/26/2002, 67 FR 60594	
Section 811	Inspection Procedures	Dec. 1999, LR 25:2427	9/26/2002, 67 FR 60594	
Section 813	Required Equipment	Dec. 1999, LR 25:2428	9/26/2002, 67 FR 60594	
Section 815	Miscellaneous Inspection Procedures.	Dec. 1999, LR 25:2433	9/26/2002, 67 FR 60594	
Subchapter C	Vehicle Emission Inspection and Maintenance Program			
Section 817	General Information	Dec. 1999, LR 25:2433	9/26/2002, 67 FR 60594	
Section 819	Anti-tampering and Inspection and Maintenance Parameters.	May 5, 2006	11/13/2006, 71 FR 66113	
Subchapter E	Administrative and Audit Procedures			
Section 833	Investigations; Administrative Actions; Sanctions.	Dec. 2001, LR 27:2260	9/26/2002, 67 FR 60594	
Section 835	Declaratory Orders and Rulings.	Dec. 1999, LR 25:2442	9/26/2002, 67 FR 60594	

(d) *EPA-approved State source-specific requirements.*

EPA-APPROVED LOUISIANA SOURCE-SPECIFIC REQUIREMENTS

Name of source	Permit or order number	State approval/effective date	EPA approval date	Comments
Lead SIP for Ethyl Corp. in Baton Rouge.	Compliance order	1/27/1989	6/27/1989, 54 FR 27002	Amended Compliance order dated 01/31/86. Modeling 05/27/88. State letter 01/27/89. Ref 52.999(c)(51)

EPA-APPROVED LOUISIANA SOURCE-SPECIFIC REQUIREMENTS—Continued

Name of source	Permit or order number	State approval/effective date	EPA approval date	Comments
Vulcan Materials Company Facility in Geiser, Ascension Parish.	1829T(M–2)	7/28/1989	10/10/1989, 54 FR 41444	Revision of Bubble Permit. Issued 03/24/83, amended 07/28/89. Ref 52.999(c)(52)
American Cyanamid Company Fortier Plant in Westwego, Jefferson Parish.	1896(M–2)	7/20/1989	11/27/1989, 54 FR 48743	Revision of Bubble Permit. Issued 10/17/84, amended 07/20/89. Ref 52.999(c)(53)
Vista Chemical Company Facility in Westlake, Louisiana.	1828(M–2)	9/25/1986	2/2/1990, 55 FR 03598	Bubble Permit. Submitted by Governor on 11/22/83, amended 09/25/86. Ref 52.999(c)(54)
Dow Chemical Facility in Plaquemine, Iberville Parish.	1838T(M–2)	10/16/1991	10/4/1994, 59 FR 50500	Revision of Bubble Permit. Issued 7/28/83, amended 10/16/91. Ref 52.999(c)(62)
Exxon Compliance Date Extension, Baton Rouge Refinery.	N/A	9/12/1997	5/11/1998, 63 FR 25773	Extension of compliance date to LAC 33:III, 2103.D.4 Ref 52.999(c)(79).
Borden Chemicals and Plastics in Baton Rouge.	Reasonable Further Progress Agreed To Order.	10/24/1996	7/2/1999, 64 FR 35939	Submitted as part of the Baton Rouge, LA Post–1996 ROP Plan
Phillips 66 Alliance Refinery	Administrative Order on Consent No. AE–AOC–14–00211A.	4/29/2016	12/21/2017, 82 FR 60520	
EcoServices LLC.	EcoServices AOC No. AE–14–00957 and through the applicability of the New Source Performance Standards for Sulfuric Acid Plants (40 CFR part 60, subpart H).	8/8/2016	12/21/2017, 82 FR 60520	
Mosaic	Mosaic AOC No. AE–AOC–14–00274A.	6/6/2016	12/21/2017, 82 FR 60520	
NRG Big Cajun II	In the Matter of Louisiana Generating LLC, Point Coupee Parish, Big Cajun II Power Plant.	2/9/2017	12/21/2017, 82 FR 60520	Units 1 and 2.
Cleco Power, LLC Brame Energy Center.	In the Matter of Cleco Power, LLC, Rapides Parish, Brame Energy Center.	2/9/2017	12/21/2017, 82 FR 60520	Unit 1 (Nesbitt 1) and Unit 2 (Rodemacher 2).
Entergy Louisiana, LLC, Little Gypsy Generating Plant.	In the Matter of Entergy Louisiana, LLC, Little Gypsy Generating Plant, St. Charles Parish.	2/13/2017	12/21/2017, 82 FR 60520	Units 2, 3, and the Auxiliary Boiler.
Entergy Louisiana, LLC, Ninemile Point Electric Generating Plant.	In the Matter of Entergy Louisiana, LLC, Ninemile Point Electric Generating Plant, Jefferson Parish.	2/9/2017	12/21/2017, 82 FR 60520	Units 4 and 5.
Entergy Louisiana, LLC, Waterford.	In the Matter of Entergy Louisiana, LLC, Waterford 1 & 2 Electrical Generating Plant, St. Charles Parish.	2/9/2017	12/21/2017, 82 FR 60520	Units 1 and 2.

EPA-APPROVED LOUISIANA SOURCE-SPECIFIC REQUIREMENTS—Continued

Name of source	Permit or order number	State approval/effective date	EPA approval date	Comments
Entergy Louisiana, LLC, Willow Glen Generating Plant.	In the Matter of Entergy Louisiana, LLC, Willow Glen Generating Plant, Iberville Parish.	2/9/2017	12/21/2017, 82 FR 60520	Units 2, 3, 4, 5, and the Auxiliary Boiler.
Entergy Louisiana, LLC, R. S. Nelson Generating Plant.	In the Matter of Entergy Louisiana, LLC, R. S. Nelson Generating Plant, Calcasieu Parish.	10/26/2017	12/21/2017, 82 FR 60520	Units 4, 6, and the Unit 4 Auxiliary Boiler.

(e) *EPA approved nonregulatory provisions and quasi-regulatory measures.*

EPA APPROVED LOUISIANA STATUTES IN THE LOUISIANA SIP

State citation	Title/subject	State approval/effective date	EPA approval date	Comments
LA. R.S. of 1992. Title 30 and 36, Subtitle II. Environmental Quality, Chapter 3. Louisiana Air Control Law				
30:2060 N.6	Toxic air pollution emission control program.	10/22/1992	6/23/1994, 59 FR 32359	Ref 52.999(c)(63)
30:2061	Small Business Stationary Source Technical and Environmental Compliance Assistance Program.	10/22/1992	6/23/1994, 59 FR 32359	Ref 52.999(c)(63)
30:2062	Louisiana Small Business Compliance Advisory panel.	10/22/1992	6/23/1994, 59 FR 32359	Ref 52.999(c)(63)
36:239(H)	Transfer of agencies and functions to the Department of Environmental Quality.	10/22/1992	6/23/1994, 59 FR 32359	Ref 52.999(c)(63).
Louisiana Revised Statutes (La. R.S. of 1993). Title 30, Minerals, oil, gas and environmental quality, Subtitle II. Environmental Quality, Chapter 2. Department of Environment Quality; Permit Review; Prohibition				
Title 30: Subtitle II, Permit Review, Ch. 2, Permit Review; Prohibition, Section 2014.1(A) and (B).	Permit review; Prohibition	6/10/1993	12/28/2016, 82 FR 95477	
Louisiana Revised Statutes (La. R.S. of 1972). Title 42, Public Officers and Employees, Chapter 15 Code of Governmental Ethics Part 1, General Provisions and Part 2 Ethical Standards for Public Servants				
Title 42 Part 1, General Provisions.	Definitions	4/1/1980	12/28/2016, 82 FR 95477	
1102(3)	Agency Head	4/1/1980	12/28/2016, 82 FR 95477	
1102(13)	Immediate Family	4/1/1980	12/28/2016, 82 FR 95477	
1102(19)	Public Servant	4/1/1980	12/28/2016, 82 FR 95477	
1102(22)(a)	Thing of Economic Value	4/1/1980	12/28/2016, 82 FR 95477	
1102(23)	Transaction Involving Government Entity.	4/1/1980	12/28/2016, 82 FR 95477	
Section 1112	Participation in Certain Transactions Involving the Governmental Entity.	4/1/1980	12/28/2016, 82 FR 95477	
Title 42 Part 2, Ethical Standards for Public Servants.	Financial disclosure	4/1/1980	12/28/2016, 82 FR 95477	
Section 1114(A)(1–4).	Financial Disclosures	4/1/1980	12/28/2016, 82 FR 95477	
Section 1114(C).	Financial Disclosures	4/1/1980	12/28/2016, 82 FR 95477	

EPA APPROVED LOUISIANA NONREGULATORY PROVISIONS AND QUASI-REGULATORY MEASURES

Name of SIP provision	Applicable geographic or nonattainment area	State submittal date/effective date	EPA approval date	Explanation
Federal Hydrocarbon Standards.	Region 106, SE LA-SE TX AQCR	3/30/1973	6/22/1973 38 FR 16565	Ref 52.999(c)(04)
PM Strategy	Region 106, SE LA-SE TX AQCR	1/2/1973	7/19/1977, 42 FR 37000	Ref 52.999(c)(06)
Air Quality Maintenance Area for PM.	Shreveport, LA	12/9/1977	8/18/1978, 43 FR 36628	Ref 52.999(c)(09)
Air Quality Surveillance Network.	New Orleans, LA	4/3/1978	1/29/1979, 44 FR 05601	Ref 52.999(c)(10) Change of sampling site location
Louisiana Ozone SIP	Nonattainment areas, AQCR 022 and 106.	4/30/1979	2/14/1980, 45 FR 09909	Ref 52.999(c)(15) Part D requirement
Evidence of Notice and Public Hearing.	Statewide	6/20/1979	2/10/1982, 47 FR 06017	Ref 52.999(c)(16)
Emission Inventory	Nonattainment areas	8/28/1978	2/14/1980, 45 FR 09909	Ref 52.999(c)(17)
Air Quality Surveillance Network.	Statewide	1/10/1980	8/6/1981, 46 FR 40006	Ref 52.999(c)(20) Final Revisions to ambient monitoring
Lead SIP	Baton Rouge, LA	10/31/1983	5/1/1984, 49 FR 18485	Ref 52.999(c)(40)
NSR and Visibility Monitoring.	Class I Federal Areas in LA	10/14/1985	6/10/1986, 51 FR 20969	Ref 52.999(c)(44)
Small Business Program.	Statewide	10/22/1992	6/23/1994, 59 FR 32359	Ref 52.999(c)(63)
Redesignation Request and Maintenance Plan.	Pointe Coupe Parish	12/20/1995	1/6/1997, 61 FR 00648	Ref 52.999(c)(70)
VOC RACT Negative Declarations.	Baton Rouge nonattainment area	12/15/1995	10/30/1996, 61 FR 55894	Ref 52.999(c)(72)
Redesignation Request and Maintenance Plan.	Calcasieu Parish	12/20/1995	5/2/1997, 62 FR 24036	Ref 52.999(c)(73).
Contingency Plan	Baton Rouge, LA	12/28/2001	9/26/2002, 67 FR 60590	Substitute measure to replace the measure approved on 7/2/1999, 64 FR 35939
Clean Fuel Fleet Program Substitution.	Baton Rouge, LA	3/21/1999	7/19/1999 64 FR 38580	Substituted above RACT VOC emission reductions from storage tank rule LAC 33:III.2103
Attainment Demonstration for the 1-Hour Ozone NAAQS.	Baton Rouge, LA	12/31/2001	10/2/2002, 67 FR 61786	
Ozone Attainment Date Extension to 11/15/2005.	Baton Rouge, LA	12/31/2001	10/2/2002, 67 FR 61786	
2005 Motor Vehicle Emissions Budgets.	Baton Rouge, LA	12/31/2001	10/2/2002, 67 FR 61786	
Enforceable Transportation Control Measure Appendix F.	Baton Rouge, LA	12/31/2001	10/2/2002, 67 FR 61786	
Enforceable commitment to perform a mid-course review and submit a SIP and revision by 05/1/2004.	Baton Rouge, LA	12/31/2001	10/2/2002, 67 FR 61786	
Post 1996 Rate of Progress Plan Revisions.	Baton Rouge, LA	12/31/2001	10/2/2002, 67 FR 61786	
15% Rate of Progress Plan Revisions.	Baton Rouge, LA	12/31/2001	10/2/2002, 67 FR 61786	
1990 VOC Base Year Inventory Revisions.	Baton Rouge, LA	12/31/2001	10/2/2002, 67 FR 61786	

EPA APPROVED LOUISIANA NONREGULATORY PROVISIONS AND QUASI-REGULATORY MEASURES—Continued

Name of SIP provision	Applicable geographic or nonattainment area	State submittal date/effective date	EPA approval date	Explanation
Reasonable Available Control Measure Analysis.	Baton Rouge, LA	12/31/2001	10/2/2002, 67 FR 61786	
Air Quality Improvement Plan, 8-hour ozone standard attainment demonstration and associated control measures for the Shreveport-Bossier City EAC area.	Bossier, Caddo and Webster Parishes, LA.	12/28/2004	8/22/2005, 70 FR 48880	
Vehicle Miles Traveled Offset Analysis.	Baton Rouge Nonattainment Area	3/22/2005	11/21/2006, 71 FR 67308	
Clean Air Interstate Rule Sulfur Dioxide Trading Program.	Statewide	9/22/2006	7/20/2007, 72 FR 39741	Acid Rain Program Provisions NOT in SIP.
Clean Air Interstate Rule Nitrogen Oxides Annual and Ozone Season Trading Programs.	Statewide		9/28/2007; 72 FR 55064	SIP revision also addresses CAA 110(a)(2)(D)(i)—Interstate Transport. The protection of visibility requirement will be re-evaluated after submission of the regional haze SIP.
8-Hour Ozone Section 110 Maintenance Plan.	Beauregard Parish, LA	8/23/2006	11/6/2007, 72 FR 62579	
8-Hour Ozone Section 110 Maintenance Plan.	Grant Parish, LA	8/23/2006	11/6/2007, 72 FR 62579	
8-Hour Ozone Section 110 Maintenance Plan.	St. Mary Parish, LA	9/27/2006	11/6/2007, 72 FR 62579	
8-Hour Ozone Section 110 Maintenance Plan.	Lafayette Parish, LA	10/13/2006	3/24/2008, 73 FR 15411	
8-Hour Ozone Section 110 Maintenance Plan.	Lafourche Parish, LA	12/19/2006	3/24/2008, 73 FR 15411	
1997 8-Hour Ozone Section 110 Maintenance Plan.	New Orleans Ozone Maintenance Area (including Jefferson, Orleans, St. Bernard and St. Charles Parishes), LA.	6/29/2007	9/16/2008, 73 FR 53373	
1997 8-Hour Ozone Section 110 Maintenance Plan.	Calcasieu Parish (Lake Charles Area), LA.	7/20/2007	10/9/2008, 73 FR 59518	
1997 8-Hour Ozone Section 110 Maintenance Plan.	St. James Parish, LA	8/24/2007	10/9/2008, 73 FR 59518	
2002 Emission Inventory.	Baton Rouge, LA	7/31/2007	9/3/2009, 74 FR 45561	
Infrastructure for the 1997 Ozone and 1997 $PM_{2.5}$ NAAQS.	Statewide	12/11/2007 1/7/2008 3/24/2011	7/19/2011, 76 FR 42549	Approval for CAA sections 110(a)(2)(A), (B), (C), (D)(ii), (E), (F), (G), (H), (J), (K), (L), and (M).
Baton Rouge Ozone Nonattainment Area Redesignation Request and Maintenance Plan.	Baton Rouge, LA	8/31/2010	11/30/2011, 76 FR 74000.	
1997 8-Hour Ozone Section 110 Maintenance Plan.	Pointe Coupee Parish, LA	2/28/2007	5/9/2013, 78 FR 27058	

EPA APPROVED LOUISIANA NONREGULATORY PROVISIONS AND QUASI-REGULATORY MEASURES—Continued

Name of SIP provision	Applicable geographic or nonattainment area	State submittal date/effective date	EPA approval date	Explanation
Interstate transport for the 2006 $PM_{2.5}$ NAAQS (contribute to nonattainment or interfere with maintenance).	Statewide	5/16/2011 5/21/2013	4/15/2014, 79 FR 21142	SIP submission dated 5/16/2011, technical supplement dated 5/21/2013.
2011 Emissions Inventory for the 2008 Ozone NAAQS.	Baton Rouge Ozone Nonattainment Area.	5/2/2016	7/5/2016, 81 FR 43490	
Infrastructure for the 2006 $PM_{2.5}$ NAAQS.	Statewide	5/16/2011	10/4/2016, 81 FR 68322	Approval for 110(a)(2)(A), (B), (C), (D)(i) (portion pertaining to PSD), D(ii), (E), (F), (G), (H), (J), (K), (L) and (M).
Infrastructure for the 2008 Pb NAAQS.	Statewide	10/10/2011	10/4/2016, 81 FR 68322	Approval for 110(a)(2)(A), (B), (C), (D), (E), (F), (G), (H), (J), (K), (L) and (M).
Infrastructure for the 2008 O_3 NAAQS.	Statewide	6/4/2013	10/4/2016, 81 FR 68322	Approval for 110(a)(2)(A), (B), (C), (D)(i) (portion pertaining to PSD), D(ii), (E), (F), (G), (H), (J), (K), (L) and (M).
Infrastructure for the 2010 NO_2 NAAQS.	Statewide	6/4/2013	10/4/2016, 81 FR 68322	Approval for 110(a)(2)(A), (B), (C), (D)(i) (portions pertaining to nonattainment, interference with maintenance and PSD), D(ii), (E), (F), (G), (H), (J), (K), (L) and (M).
Infrastructure for the 2010 SO_2 NAAQS.	Statewide	6/4/2013	10/4/2016, 81 FR 68322	Approval for 110(a)(2)(A), (B), (C), (D)(i) (portion pertaining PSD), D(ii), (E), (F), (G), (H), (J), (K), (L) and (M).
Infrastructure for the 2012 $PM_{2.5}$ NAAQS.	Statewide	12/17/2015	10/4/2016, 81 FR 68322	Approval for 110(a)(2)(A), (B), (C), (D)(i) (portion pertaining to PSD), D(ii), (E), (F), (G), (H), (J), (K), (L) and (M).
2008 8-hour Ozone NAAQS Redesignation Request and Maintenance Plan.	Baton Rouge Area	5/2/2015	12/27/2016, 82 FR 95051	

EPA APPROVED LOUISIANA NONREGULATORY PROVISIONS AND QUASI-REGULATORY MEASURES—Continued

Name of SIP provision	Applicable geographic or nonattainment area	State submittal date/effective date	EPA approval date	Explanation
Louisiana Regional Haze.	Statewide	6/13/2008 8/11/2016 2/10/2017 10/26/2017	12/21/2017, 82 FR 60520	Supplemental information provided 10/9/2017 regarding Entergy Louisiana, LLC, Michoud Electric Generating Plant, Units 1, 2, and 3, Permit no. 2140–00014–V4, effective 4/28/15.
Interstate transport for the 2012 $PM_{2.5}$ NAAQS (contribute to nonattainment or interfere with maintenance).	Statewide	12/11/2015 7/7/2017	5/3/2018, 83 FR 19438	Adequate provisions prohibiting emissions which will contribute significantly to nonattainment in, or interfere with maintenance of the 2012 $PM_{2.5}$ NAAQS in any other State.
2008 8-hour Ozone NAAQS Revised Maintenance Plan.	Baton Rouge Area	1/31/2018	5/25/2018, 83 FR 24226	

[63 FR 63183, Nov. 12, 1998]

EDITORIAL NOTE: For FEDERAL REGISTER citations affecting § 52.970, see the List of CFR Sections Affected, which appears in the Finding Aids section of the printed volume and at www.fdsys.gov.

§ 52.971 Classification of regions.

The Louisiana plan was evaluated on the basis of the following classifications:

Air quality control region	Pollutant				
	Particulate matter	Sulfur oxides	Nitrogen dioxide	Carbon monoxide	Ozone
Southern Louisiana-Southeast Texas Interstate	II	I	III	III	I
Shreveport-Texarkana-Tyler Interstate	II	III	III	III	III
Monroe-El Dorado Interstate	II	III	III	III	III

[37 FR 10869, May 31, 1972, as amended at 45 FR 9909, Feb. 14, 1980]

§§ 52.972–52.974 [Reserved]

§ 52.975 Redesignations and maintenance plans; ozone.

(a) *Approval.* The Louisiana Department of Environmental Quality (LDEQ) submitted redesignation requests and maintenance plans for the areas of Beauregard, Lafourche, and St. Mary Parishes on June 14, 1993. Redesignation requests and maintenance plans were submitted for the areas of Grant and Lafayette on May 25, 1993. The EPA deemed these requests complete on September 10, 1993. Several approvability issues existed, however. The LDEQ addressed these approvability issues in supplemental ozone redesignation requests and revised maintenance plans. These supplemental submittals were received for the areas of Beauregard, Grant, Lafayette, Lafourche, and St. Mary Parishes on March 27, 1995, December 12, 1994, October 21, 1994, November 18, 1994, and November 23, 1994, respectively. The redesignation requests and maintenance

plans meet the redesignation requirements in section 107(d)(3)(E) of the Act as amended in 1990. The redesignations meet the Federal requirements of section 182(a)(1) of the Clean Air Act as a revision to the Louisiana ozone State Implementation Plan for these areas. The EPA therefore approved the request for redesignation to attainment with respect to ozone for the areas of Beauregard, Grant, Lafayette, Lafourche, and St. Mary Parishes on October 17, 1995.

(b) *Approval*—The Louisiana Department of Environmental Quality (LDEQ) submitted a redesignation request and maintenance plan for St. James Parish on May 25, 1993. The EPA deemed this request complete on September 10, 1993. Several approvability issues existed, however. The LDEQ addressed these approvability issues in a supplemental ozone redesignation request and revised maintenance plan. This supplemental submittal was received for St. James Parish on December 15, 1994. The redesignation request and maintenance plan meet the redesignation requirements in section 107(d)(3)(E) of the Act as amended in 1990. The redesignation meets the Federal requirements of section 182(a)(1) of the Clean Air Act as a revision to the Louisiana ozone State Implementation Plan for this parish. The EPA therefore approved the request for redesignation to attainment with respect to ozone for St. James Parish on November 13, 1995.

(c) *Approval*—The Louisiana Department of Environmental Quality (LDEQ) submitted a redesignation request and maintenance plan for the New Orleans CMSA on April 23, 1993. The EPA deemed this request complete on September 10, 1993. Several approvability issues existed, however. The LDEQ addressed these approvability issues in a supplemental ozone redesignation request and revised maintenance plan. This supplemental submittal was received on October 14, 1994. The redesignation request and maintenance plans meet the redesignation requirements in section 107(d)(3)(E) of the Act as amended in 1990. The redesignation meets the Federal requirements of section 182(a)(1) of the Clean Air Act as a revision to the Louisiana ozone State Implementation Plan for Jefferson, Orleans, St. Bernard, and St. Charles Parishes. The EPA therefore approved the request for redesignation to attainment with respect to ozone for 7Jefferson, Orleans, St. Bernard, and St. Charles Parishes on December 1, 1995.

(d) *Approval*—The Louisiana Department of Environmental Quality submitted a redesignation request and maintenance plan for Pointe Coupee Parish on December 20, 1995. The redesignation request and maintenance plan meet the redesignation requirements in section 107(d)(3)(E) of the Act as amended in 1990. The redesignation meets the Federal requirements of section 182(a)(1) of the Clean Air Act as a revision to the Louisiana ozone State Implementation Plan for Pointe Coupee Parish. The EPA therefore approved the request for redesignation to attainment with respect to ozone for Pointe Coupee Parish on December 20, 1996.

(e) *Approval*—The Louisiana Department of Environmental Quality submitted a redesignation request and maintenance plan for Calcasieu Parish on December 20, 1995. The redesignation request and maintenance plan meet the redesignation requirements in section 107(d)(3)(E) of the Act. The redesignation meets the Federal requirements of section 182(a)(1) of the Act as a revision to the Louisiana ozone State Implementation Plan for Calcasieu Parish. The EPA therefore approved the request for redesignation to attainment with respect to ozone for Calcasieu Parish on June 2, 1997.

(f) *Approval*—The Louisiana Department of Environmental Quality (LDEQ) submitted minimal maintenance plans for Lafourche Parish on November 18, 1994. The LDEQ submitted a redesignation request on August 9, 2000. The maintenance plans meet the redesignation requirements in section 107(d)(3)(E) of the Act as amended in 1990. The redesignation meets the Federal requirements of section 182(a)(1) of the Clean Air Act as a revision to the Louisiana ozone State Implementation Plan for Lafourche Parish.

(g) *Approval*—The Louisiana Department of Environmental Quality

(LDEQ) submitted to the EPA a request on December 4, 2000, to revise the Louisiana SIP for Beauregard, St. Mary, Lafayette, and Grant Parishes and the New Orleans Consolidated Metropolitan Statistical Area ozone maintenance area. The revision involves changes to the approved contingency plans. The contingency measures and the schedule for implementation satisfy the requirements of section 175A(d) of the Act. The EPA therefore approved this request on June 20, 2003.

(h) *Approval.* The Louisiana Department of Environmental Quality (LDEQ) submitted 8-hour ozone maintenance plans for the areas of Beauregard, Grant, and St. Mary Parishes on August 23, 2006, August 23, 2006, and October 10, 2006, respectively. The three areas are designated unclassifiable/attainment for the 8-hour ozone standard. EPA determined these requests for Beauregard, Grant, and St. Mary Parishes were complete on October 9, 2006, October 9, 2006, and November 30, 2006, respectively. The maintenance plans meet the requirements of section 110(a)(1) of the Clean Air Act, and are consistent with EPA's maintenance plan guidance document dated May 20, 2005. The EPA therefore approved the 8-hour ozone maintenance plans for the areas of Beauregard, Grant, and St. Mary parishes on November 6, 2007.

(i) *Approval.* The Louisiana Department of Environmental Quality (LDEQ) submitted 8-hour ozone maintenance plans for the Lafayette and Lafourche Parish areas on October 13, 2006 and December 19, 2006, respectively. The two areas are designated unclassifiable/attainment for the 8-hour ozone standard. EPA determined these requests for Lafayette and Lafourche Parishes were complete on November 30, 2006 and May 2, 2007, respectively. These maintenance plans meet the requirements of section 110(a)(1) of the Clean Air Act, and are consistent with EPA's maintenance plan guidance document dated May 20, 2005. The EPA therefore approved the 8-hour ozone maintenance plans for the Lafayette and Lafourche Parish areas on *March 24, 2008.*

(j) Approval. The Louisiana Department of Environmental Quality (LDEQ) submitted 1997 8-hour ozone NAAQS maintenance plans for the areas of Calcasieu and St. James Parishes on July 20, 2007, and August 24, 2007, respectively. The two areas are designated unclassifiable/attainment for the 1997 8-hour ozone standard. EPA determined these requests for Calcasieu and St. James Parishes were complete on October 5, 2007, and October 16, 2007, respectively. The maintenance plans meet the requirements of section 110(a)(1) of the Clean Air Act, and are consistent with EPA's maintenance plan guidance document dated May 20, 2005. The EPA therefore approved the 1997 8-hour ozone NAAQS maintenance plans for the areas of Calcasieu and St. James Parishes on *October 9, 2008.*

(k) *Approval.* The LDEQ submitted a maintenance plan addressing the 1997 8-hour ozone standard for the New Orleans Ozone Maintenance Area on June 29, 2007. This area is designated unclassifiable/attainment for the 1997 ozone standard. EPA determined this request for the New Orleans Ozone Maintenance Area was complete on August 8, 2007. This maintenance plan meets the requirements of section 110(a)(1) of the CAA, and is consistent with EPA's maintenance plan guidance document dated May 20, 2005. The EPA therefore approved the 1997 8-hour ozone NAAQS maintenance plan for the New Orleans Ozone Maintenance Area including the parishes of Jefferson, Orleans, St. Bernard and St. Charles on September 16, 2008.

(l) *Approval.* The Louisiana Department of Environmental Quality (LDEQ) submitted a 1997 8-hour ozone NAAQS maintenance plan for the area of Pointe Coupee Parish on February 28, 2007. The area is designated unclassifiable/attainment for the 1997 8-hour ozone standard. EPA determined this request for Pointe Coupee Parish was complete on May 2, 2007. The maintenance plan meets the requirements of section 110(a)(1) of the Clean Air Act, and is consistent with EPA's maintenance plan guidance document dated May 20, 2005. The EPA therefore approved the 1997 8-hour ozone NAAQS

maintenance plan for the area of Pointe Coupee Parish on May 9, 2013.

[60 FR 43025, Aug. 18, 1995, as amended at 60 FR 47285, Sept. 12, 1995; 60 FR 51360, Oct. 2, 1995; 62 FR 652, Jan. 6, 1997; 62 FR 24038, May 2, 1997; 62 FR 64286, Dec. 5, 1997; 66 FR 66321, Dec. 26, 2001; 68 FR 19375, Apr. 21, 2003; 72 FR 62584, Nov. 6, 2007; 73 FR 15416, Mar. 24, 2008; 73 FR 53378, Sept. 16, 2008; 73 FR 59523, Oct. 9, 2008; 78 FR 27062, May 9, 2013]

§ 52.976 Review of new sources and modification.

(a) Section 6.7 of Regulation 6.0 is disapproved since it could conflict with the preconstruction requirements for the prevention of significant deterioration (PSD) of air quality.

(b) Section 6.9 of Regulation 6.0 is disapproved since it could conflict with the preconstruction requirements for the prevention of significant deterioration (PSD) of air quality and the Administrator's Interpretative on Rule of December 21, 1976.

[44 FR 18491, Mar. 28, 1979, as amended at 47 FR 6017, Feb. 10, 1982]

§ 52.977 Control strategy and regulations: Ozone.

(a) *Determination of Attainment*. Effective March 12, 2010 EPA has determined the Baton Rouge 1-hour ozone nonattainment area has attained the 1-hour ozone National Ambient Air Quality Standard (NAAQS). Under the provisions of EPA's Clean Data Policy, this determination suspends the requirements for this area to submit a severe attainment demonstration, a severe reasonable further progress plan, applicable contingency measures plans, and other planning Louisiana State Implementation Plan (SIP) requirements related to attainment of the 1-hour ozone NAAQS for so long as the area continues to attain the 1-hour ozone NAAQS.

(b) *Determination of Attainment*. Effective October 12, 2010 EPA has determined that the Baton Rouge 8-hour ozone nonattainment area has attained the 1997 8-hour ozone National Ambient Air Quality Standard (NAAQS). Under the provisions of 40 CFR 51.918 this determination suspends the requirements for this area to submit an attainment demonstration, a reasonable further progress plan, applicable contingency measures, and other planning Louisiana State Implementation Plan (SIP) requirements related to attainment of the 1997 8-hour ozone NAAQS for so long as the area continues to attain the 1997 8-hour ozone NAAQS.

(c) Determination to Terminate the Clean Air Act Section 185 Penalty Fee Requirement. Effective September 6, 2011 EPA has determined that the State of Louisiana is no longer required to submit a section 185 fee program State Implementation Plan (SIP) revision for the Baton Rouge ozone nonattainment area to satisfy anti-backsliding requirements for the 1-hour ozone standard. This determination is based on EPA's determination that the area has attained the 1-hour ozone standard due to permanent and enforceable emissions reductions.

(d) Redesignation for the 1997 8-hour Ozone Standard. Effective December 30, 2011, EPA has redesignated the Baton Rouge area to attainment for the 1997 8-hour ozone standard. With this final redesignation to attainment for the 1997 8-hour ozone NAAQS and the final determination of attainment for the 1-hour ozone NAAQS in paragraph (a) of this section, the 1-hour anti-backsliding obligations to submit planning SIPs to meet the attainment demonstration and reasonably available control measures requirements, the rate of progress and contingency measures requirements, and any other outstanding 1-hour requirements, cease to apply.

(e) *Clean Data Determination*. Effective June 16, 2014 EPA has determined that the Baton Rouge, Louisiana, marginal 2008 8-hour ozone nonattainment area is currently attaining the 2008 8-hour NAAQS for ozone.

(f) The EPA has determined that the Baton Rouge Marginal 2008 ozone NAAQS nonattainment area attained the NAAQS by the applicable attainment date of July 20, 2015.

[75 FR 6575, Feb. 10, 2010, as amended at 75 FR 54779, Sept. 9, 2010; 76 FR 39777, July 7, 2011; 76 FR 74002, Nov. 30, 2011; 79 FR 21142, Apr. 15, 2014; 81 FR 26709, May 4, 2016]

§§ 52.978–52.983 [Reserved]

§ 52.984 Interstate pollutant transport provisions; What are the FIP requirements for decreases in emissions of nitrogen oxides?

(a)(1) The owner and operator of each source located within the State of Louisiana and for which requirements are set forth under the Federal CAIR NO_X Annual Trading Program in subparts AA through II of part 97 of this chapter must comply with such applicable requirements. The obligation to comply with these requirements in part 97 of this chapter will be eliminated by the promulgation of an approval by the Administrator of a revision to the Louisiana State Implementation Plan (SIP) as meeting the requirements of CAIR for $PM_{2.5}$ relating to NO_X under § 51.123 of this chapter, except to the extent the Administrator's approval is partial or conditional or unless such approval is under § 51.123(p) of this chapter.

(2) Notwithstanding any provisions of paragraph (a)(1) of this section, if, at the time of such approval of the State's SIP, the Administrator has already allocated CAIR NO_X allowances to sources in the State for any years, the provisions of part 97 of this chapter authorizing the Administrator to complete the allocation of CAIR NO_X allowances for those years shall continue to apply, unless the Administrator approves a SIP provision that provides for the allocation of the remaining CAIR NO_X allowances for those years.

(b)(1) The owner and operator of each NO_X source located within the State of Louisiana and for which requirements are set forth under the Federal CAIR NO_X Ozone Season Trading Program in subparts AAAA through IIII of part 97 of this chapter must comply with such applicable requirements. The obligation to comply with these requirements in part 97 of this chapter will be eliminated by the promulgation of an approval by the Administrator of a revision to the Louisiana State Implementation Plan (SIP) as meeting the requirements of CAIR for ozone relating to NO_X under § 51.123 of this chapter, except to the extent the Administrator's approval is partial or conditional or unless such approval is under § 51.123(ee) of this chapter.

(2) Notwithstanding any provisions of paragraph (b)(1) of this section, if, at the time of such approval of the State's SIP, the Administrator has already allocated CAIR NO_X Ozone Season allowances to sources in the State for any years, the provisions of part 97 of this chapter authorizing the Administrator to complete the allocation of CAIR NO_X Ozone Season allowances for those years shall continue to apply, unless the Administrator approves a SIP provision that provides for the allocation of the remaining CAIR NO_X Ozone Season allowances for those years.

(c) Notwithstanding any provisions of paragraphs (a) and (b) of this section and subparts AA through II and AAAA through IIII of part 97 of this chapter to the contrary:

(1) With regard to any control period that begins after December 31, 2014,

(i) The provisions in paragraphs (a) and (b) of this section relating to NO_X annual or ozone season emissions shall not be applicable; and

(ii) The Administrator will not carry out any of the functions set forth for the Administrator in subparts AA through II and AAAA through IIII of part 97 of this chapter;

(2) The Administrator will not deduct for excess emissions any CAIR NO_X allowances or CAIR NO_X Ozone Season allowances allocated for 2015 or any year thereafter;

(3) By March 3, 2015, the Administrator will remove from the CAIR NO_X Allowance Tracking System accounts all CAIR NO_X allowances allocated for a control period in 2015 and any subsequent year, and, thereafter, no holding or surrender of CAIR NO_X allowances will be required with regard to emissions or excess emissions for such control periods; and

(4) By March 3, 2015, the Administrator will remove from the CAIR NO_X Ozone Season Allowance Tracking System accounts all CAIR NO_X Ozone Season allowances allocated for a control period in 2015 and any subsequent year, and, thereafter, no holding or surrender of CAIR NO_X Ozone Season allowances will be required with regard to emissions or excess emissions for such control periods.

(d)(1) The owner and operator of each source and each unit located in the State of Louisiana and Indian country within the borders of the State and for which requirements are set forth under the CSAPR NO_X Ozone Season Group 1 Trading Program in subpart BBBBB of part 97 of this chapter must comply with such requirements with regard to emissions occurring in 2015 and 2016.

(2) The owner and operator of each source and each unit located in the State of Louisiana and Indian country within the borders of the State and for which requirements are set forth under the CSAPR NO_X Ozone Season Group 2 Trading Program in subpart EEEEE of part 97 of this chapter must comply with such requirements with regard to emissions occurring in 2017 and each subsequent year. The obligation to comply with such requirements with regard to sources and units in the State will be eliminated by the promulgation of an approval by the Administrator of a revision to Louisiana's State Implementation Plan (SIP) as correcting the SIP's deficiency that is the basis for the CSAPR Federal Implementation Plan (FIP) under § 52.38(b) for those sources and units, except to the extent the Administrator's approval is partial or conditional, provided that because the CSAPR FIP was promulgated as a partial rather than full remedy for an obligation of the State to address interstate air pollution, the SIP revision likewise will constitute a partial rather than full remedy for the State's obligation unless provided otherwise in the Administrator's approval of the SIP revision. The obligation to comply with such requirements with regard to sources and units located in Indian country within the borders of the State will not be eliminated by the promulgation of an approval by the Administrator of a revision to Louisiana's SIP.

(3) Notwithstanding the provisions of paragraph (d)(2) of this section, if, at the time of the approval of Louisiana's SIP revision described in paragraph (d)(2) of this section, the Administrator has already started recording any allocations of CSAPR NO_X Ozone Season Group 2 allowances under subpart EEEEE of part 97 of this chapter to units in the State for a control period in any year, the provisions of subpart EEEEE of part 97 of this chapter authorizing the Administrator to complete the allocation and recordation of CSAPR NO_X Ozone Season Group 2 allowances to units in the State for each such control period shall continue to apply, unless provided otherwise by such approval of the State's SIP revision.

[72 FR 62348, Nov. 2, 2007, as amended at 76 FR 48366, Aug. 8, 2011; 79 FR 71671, Dec. 3, 2014; 81 FR 74596, Oct. 26, 2016]

§ 52.985 Visibility protection.

(a) *Measures addressing best available retrofit technology (BART) for electric generating unit (EGU) emissions of nitrogen oxides (NO_X).* The BART requirements for EGU NO_X emissions are satisfied by § 52.984.

(b) *Other measures addressing BART.* The BART requirements for emissions other than EGU NO_X emissions are satisfied by the Louisiana Regional Haze SIP approved December 21, 2017.

[82 FR 60543, Dec. 21, 2017]

§ 52.986 Significant deterioration of air quality.

(a) The plan submitted by the Governor of Louisiana on August 14, 1984 (as adopted by the Secretary of Louisiana Department of Environmental Quality (LDEQ) on May 23, 1985), July 26, 1988 (as revised and adopted by the LDEQ on May 5, 1988), and October 26, 1990 (as revised and adopted by the LDEQ on July 20, 1990), LAC:33:III: § 509 Prevention of Significant Deterioration (PSD) and its Supplement documents, is approved as meeting the requirements of Part C, Clean Air Act for preventing significant deterioration of air quality.

(b) The requirements of sections 160 through 165 of the Clean Air Act are not met for federally designated Indian lands since the plan (specifically LAC: 33:III:509.A.1) excludes all federally recognized Indian lands from the provisions of this regulation. Therefore, the provisions of § 52.21 except paragraph (a)(1) are hereby incorporated and made a part of the applicable implementation plan, and are applicable to sources located on land under the control of Indian governing bodies.

(c) The revisions to the Louisiana SIP adopted on April 20, 2011, and submitted on December 21, 2011, establishing PSD permitting requirements for sources that are classified as major and thus required to obtain a PSD permit based solely on their potential GHG emissions (''Step 2'' sources) at the definition of ''major stationary source'' paragraph (c) and the definition of ''significant'' at LAC 33:III.509(B), are disapproved as inconsistent with federal law for the regulation and permitting of GHGs.

[56 FR 20139, May 2, 1991, as amended at 68 FR 11323, Mar. 10, 2003; 68 FR 74489, Dec. 24, 2003; 75 FR 82555, Dec. 30, 2010; 81 FR 46608, July 18, 2016]

§ 52.987 Control of hydrocarbon emissions.

(a) Notwithstanding any provisions to the contrary in the Louisiana Implementation Plan, the control measures listed in paragraphs (b) through (n) of this section shall be implemented in accordance with the schedule set forth below.

(b) Removal from service of a 10,000 barrel capacity crude oil storage tank at the Belcher Station of the Exxon Pipeline Company, Belcher, Louisiana, with a final compliance date of January 1, 1980. This shall result in an estimated hydrocarbon emission reduction of at least 208 tons per year.

(c) Removal from service of a 55,000 barrel capacity crude oil storage tank at the Weller Station of the Exxon Pipeline Company, near Minden, Louisiana, with a final compliance date of January 1, 1980. This shall result in an estimated hydrocarbon emission reduction of at least 263 tons per year.

(d) Installation of emission control systems on three 3,000 barrel capacity distillate storage tanks, at the Jones O'Brien Inc., Keatchie, Louisiana, with a final compliance date of January 1, 1978. This shall result in an estimated hydrocarbon emission reduction of at least 23 tons per year.

(e) Installation of emission control systems on crude oil storage tanks TK–43, TK–44, T–45 and T–49, and distillate tanks T–46 and T–50 at the Atlas Processing Company, Shreveport, Louisiana with a final compliance date of January 2, 1980. This shall result in an estimated hydrocarbon emission reduction of at least 881 tons per year.

(f) Installation of emission control systems on crude oil storage tanks TK–19–74, TK–HC–74, TK–571–74 and TK–15–74 and agreement to store only nonvolatile organic solvent in tanks TK–F2–74, TK–41–74 and TK–40–74 at the Cotton Valley Solvents Company, Cotton Valley, Louisiana with a final compliance date of January 2, 1980. This shall result in an estimated hydrocarbon emission reduction of at least 934 tons per year.

(g) Discontinue use of residue gas in pneumatic instrumentation and control systems at the Kerr-McGee Corporation, Devon Corporation, and Eason Oil Company, Calhoun Plant, Calhoun, Louisiana with a final compliance date of July 1, 1978. This shall result in an estimated hydrocarbon emission reduction of at least 21 tons per year.

(h) Discontinue use of residue gas in pneumatic instrumentation and control systems with a final compliance date of July 1, 1978, and install emission control systems on distillate storage tanks 2–7 and 2–13 with a final compliance date of January 2, 1980, at the Kerr-McGee Corp., Devon Corp., and Eason Oil Co., Dubach Plant, Dubach, Louisiana. This shall result in an estimated hydrocarbon reduction of at least 367 tons per year.

(i) Installation of emission control systems on a 37,500 barrel capacity crude oil storage tank at Cities Service Pipeline Company, Oil City, Louisiana with a final compliance date of February 1, 1980. This shall result in an estimated hydrocarbon emission reduction of at least 208 tons per year.

(j) Installation of emission control systems on a 25,000 barrel capacity crude oil storage tank at Cities Service Pipeline Company, Haynesville, Louisiana with a final compliance date of February 1, 1980. This shall result in an estimated hydrocarbon emission reduction of at least 28 tons per year.

(k) Installation of emission control systems on a 10,000 barrel capacity crude oil storage tank at Cities Service Pipeline Company, Summerfield, Louisiana with final compliance achieved in August 1977. This shall result in an

estimated hydrocarbon emission reduction of at least 162 tons per year.

(l) Installation of emission control systems on a 30,000 barrel capacity crude oil storage tank at the Scurlock Oil Company, Lake End, Louisiana, with a final compliance date of January 15, 1980. This shall result in an estimated hydrocarbon emission reduction of at least 90 tons per year.

(m) Installation of emission control systems on a 55,000 barrel capacity crude oil storage tank at the Scurlock Oil Company, Dutchtown Oil Field near Minden, Louisiana, with a final compliance date of January 15, 1980. This shall result in an estimated hydrocarbon emission reduction of at least 186 tons per year.

(n) Installation of emission control systems on distillate storage tank No. 414 with a final compliance date of September 1, 1979, and the removal from service of tank No. 450 with final compliance achieved on December 1, 1977, at the Texas Eastern Products Pipeline Company, Sarepta, Louisiana. This shall result in an estimated hydrocarbon emission reduction of at least 355 tons per year.

[44 FR 15705, Mar. 15, 1979]

§ 52.988 [Reserved]

§ 52.990 Stack height regulations.

The State of Louisiana has committed to submit to EPA a SIP revision whenever a new or revised emission limitation for a specific source exceeds the height allowed by Section 921(A) ''Good Engineering Practice (GEP) Stack Height 1 or 2'' of the State regulations. A letter from the Secretary of Louisiana Department of Environmental Quality, dated September 23, 1986, stated that:

In specific, the State regulation, Section 17.14.2 [now LAC 33: Part III, Section 921(B)], provides that the degree of emission limitation required of any source for control of any air pollutant must not be affected by so much of any source's stack height that exceeds good engineering practice or by any other dispersion technique. In reference to this requirement, the Louisiana Department of Environmental Quality or the Administrative Authority will submit to EPA a SIP revision whenever the Louisiana Department of Environmental Quality adopts a new or revised emission limitation for a specific source that is based on a stack height that exceeds the height allowed by Section 17.14.1(e)(1) [now LAC 33: Part III, Section 921(A) ''Good Engineering Practice (GEP) Stack Height 1''] or Section 17.14.1(e)(2) [now LAC 33: Part III, Section 921(A) ''Good Engineering Practice (GEP) Stack Height 2'']. [53 FR 36010, Sept. 16, 1988]

§ 52.991 Small business assistance program.

The Governor of Louisiana submitted on October 22, 1992, a plan revision to develop and implement a Small Business Stationary Source Technical and Environmental Compliance Assistance Program to meet the requirements of section 507 of the Clean Air Act by November 15, 1994. The plan commits to provide technical and compliance assistance to small businesses, hire an Ombudsman to serve as an independent advocate for small businesses, and establish a Compliance Advisory Panel to advise the program and report to EPA on the program's effectiveness.

[59 FR 32360, June 23, 1994]

§ 52.992 Area-wide nitrogen oxides exemptions.

(a) The Louisiana Department of Environmental Quality submitted to the EPA on August 5, 1994, a petition requesting that the nonclassifiable ozone nonattainment areas in the State of Louisiana be exempted from the requirement to meet the NO_X provisions of the Federal transportation conformity rule. The exemption request was based on monitoring data which demonstrated that the National Ambient Air Quality Standard for ozone had been attained in this area for the 3 years prior to the petition. The parishes for which the NO_X exemption was requested include: Beauregard, Grant, Lafayette, Lafourche, Jefferson, Orleans, St. Bernard, St. Charles, St. James, and St. Mary. The EPA approved this exemption request on March 2, 1995.

(b) The LDEQ submitted to the EPA on November 17, 1994, a petition requesting that the Baton Rouge serious ozone nonattainment area be exempted from the NO_X control requirements of the CAA. In addition, supplemental information was submitted to the EPA by the LDEQ on January 26, 1995, June

6, 1995, and June 16, 1995. The Baton Rouge nonattainment area consists of East Baton Rouge, West Baton Rouge, Pointe Coupee, Livingston, Iberville, and Ascension Parishes. The exemption request was based on photochemical grid modeling which shows that reductions in NO_X would not contribute to attainment in the nonattainment area. On January 18, 1996, the EPA approved the State's request for an areawide exemption from the following requirements: NO_X new source review, NO_X reasonably available control technology, NO_X general conformity, and NO_X inspection and maintenance requirements.

(c) The LDEQ submitted to the EPA on July 25, 1995, a revision to the SIP, pursuant to section 182(b)(1), requesting that the Baton Rouge serious ozone nonattainment area be exempted from the transportation conformity NO_X requirements of the CAA. The Baton Rouge nonattainment area consists of East Baton Rouge, West Baton Rouge, Pointe Coupee, Livingston, Iberville, and Ascension Parishes. The exemption request was based on photochemical grid modeling which shows that additional reductions in NO_X would not contribute to attainment in the nonattainment area. On February 12, 1996, the EPA approved the State's request for an areawide exemption from the transportation conformity NO_X requirements.

(d) The LDEQ submitted to the EPA on October 28, 1994, a petition requesting that the Lake Charles marginal ozone nonattainment area be exempted from the NO_X control requirements of the Act. The Lake Charles nonattainment area consists of Calcasieu Parish. The exemption request was based on photochemical grid modeling which shows that reductions in NO_X would not contribute to attainment in the nonattainment area. On May 27, 1997, the EPA approved the State's request for an area-wide exemption from the following requirements: NO_X new source review, NO_X general conformity, and NO_X transportation conformity requirements. The waiver was granted on the basis of modeling, and ambient air quality data demonstrating the area has attained the ozone NAAQS.

(e) On September 24, 2001, and on December 31, 2001, the LDEQ requested that EPA rescind the Baton Rouge section 182(f) and 182(b)(1) NO_X exemptions that were approved by EPA, and published in the FEDERAL REGISTER on January 26, 1996 (61 FR 2438), and February 27, 1996 (61 FR 7218). The State based its request on photochemical grid modeling recently performed for the Baton Rouge State Implementation Plan (SIP) which indicates that controlling NO_X sources will assist in bringing the Baton Rouge area into attainment with the National Ambient Air Quality Standard (NAAQS) for ozone. On May 7, 2002, EPA proposed approval of the State's request to rescind both NO_X exemptions. Based on our review of the State's request and the supporting photochemical grid modeling the NO_X exemptions are rescinded on May 5, 2003.

[60 FR 5864, Jan. 31, 1995, as amended at 61 FR 2446, Jan. 26, 1996; 61 FR 7221, Feb. 27, 1996; 62 FR 29078, May 29, 1997; 68 FR 23604, May 5, 2003]

§ 52.993 Emissions inventories.

(a) The Governor of the State of Louisiana submitted the 1990 base year emission inventories for the Baton Rouge (BTR) and Calcasieu Parish (CAL) ozone nonattainment areas on November 16, 1992 as a revision to the State Implementation Plan (SIP). The 1990 base year emission inventory requirement of section 182(a)(1) of the Clean Air Act, as amended in 1990, has been satisfied for each of these areas.

(b) The inventories are for the ozone precursors which are volatile organic compounds, nitrogen oxides, and carbon monoxide. The inventories cover point, area, non-road mobile, on-road mobile, and biogenic sources.

(c) The BTR nonattainment area is classified as Serious and includes Ascension, East Baton Rouge, Iberville, Livingston, Point Coupee, and West Baton Rouge Parishes; the CAL nonattainment area is classified as Marginal and includes Calcasieu Parish.

(d) On December 15, 1995, the Governor of the State of Louisiana submitted a revision to the 1990 base year volatile organic compound (VOC) emissions inventory for the Baton Rouge, Louisiana ozone nonattainment area.

The revised inventory was submitted as part of the revised Baton Rouge 15 Percent Rate-of-Progress Plan. This revision to the base year inventory modified the point source VOC emissions. The revisions satisfy the requirements of section 182(a)(1) of the Clean Air Act, as amended in 1990.

(e) On January 2, 1997, the Governor of the State of Louisiana submitted a revision to the 1990 base year volatile organic compound (VOC) emissions inventory for the Baton Rouge, Louisiana ozone nonattainment area. The revised inventory was submitted as part of the revised Baton Rouge Post–1996 Rate-of-Progress Plan. This revision to the base year inventory modified the point, area, non-road mobile, on-road mobile, and biogenic sources of VOC emissions. The revisions satisfy the requirements of section 182(a)(1) of the Clean Air Act, as amended in 1990.

[60 FR 13911, Mar. 15, 1995, as amended at 64 FR 35941, July 2, 1999]

§ 52.994 [Reserved]

§ 52.995 Enhanced ambient air quality monitoring.

(a) The Governor of the State of Louisiana submitted the photochemical assessment monitoring stations (PAMS) State Implementation Plan (SIP) revision for the Baton Rouge ozone nonattainment area on September 10, 1993. This SIP submittal satisfies 40 CFR 58.20(f), which requires the State to provide for the establishment and maintenance of PAMS.

(b) The Baton Rouge ozone nonattainment area is classified as Serious and includes Ascension, East Baton Rouge, Iberville, Livingston, Pointe Coupee, and West Baton Rouge Parishes.

[61 FR 31037, June 19, 1996]

§ 52.996 Disapprovals.

(a) The portion of the SIP submitted on June 4, 2013 addressing Clean Air Act section 110(a)(2)(D)(i)(I) for the 2008 ozone NAAQS is disapproved.

(b) The portions of the SIP submitted on May 16, 2011, June 4, 2013, and December 17, 2015 addressing noninterference with measures required to protect visibility in any other state (Clean Air Act section 110(a)(2)(D)(i)(II)) are disapproved for the following National Ambient Air Quality Standards: 2006 $PM_{2.5}$, 2008 Ozone, 2010 NO_2, 2010 SO_2 and 2012 $PM_{2.5}$.

[81 FR 53309, Aug. 12, 2016, as amended at 81 FR 68334, Oct. 4, 2016]

§ 52.999 Original identification of plan section.

(a) This section identifies the original ''The Louisiana Air Control Commission Implementation Plan'' and all revisions submitted by Louisiana that were federally approved prior to July 1, 1998.

(b) The plan was officially submitted on January 28, 1972.

(c) The plan revisions listed below were submitted on the dates specified.

(1) Certification that public hearings were held on the State's implementation plan was submitted on February 28, 1972. (Non-regulatory)

(2) Response to comments by Region VI on the plan was transmitted by the Louisiana Air Control Commission on May 8, 1972. (Non-regulatory)

(3) Revisions to Louisiana Air Control Regulations 6, 8, 18, 19, 22, A22, 27, 28, control strategy for photochemical oxidants-hydrocarbons, prevention of air pollution emergency episodes, source surveillance, and procedures for submission and approval and compliance schedules were submitted by the Governor on July 17, 1972.

(4) Revisions concerning the control strategy for photochemical oxidants and hydrocarbon for Region 106 was submitted by the Governor on March 30, 1973. (Regulatory)

(5) Revision of Section 6.1 of the State air control regulations was submitted by the Governor on April 25, 1973.

(6) A revision concerning the control strategy for particulate matter for the Southern Louisiana-Southeast Texas AQCR was submitted by the Governor on January 2, 1973.

(7) Variances to Emission Limiting Regulations adopted by the Louisiana Air Control Commission on October 29, 1975, December 12, 1975, and April 6, 1976, and submitted by the Governor on April 22, 1976.

(8) Commission Orders creditable as emission offsets for the GM Plant in

Shreveport were submitted by the Governor on January 25, 1978 as amendments to the Louisiana State Implementation Plan.

(9) A proposed dedesignation of the Shreveport area as an AQMA for particulate matter was submitted by the Governor on December 9, 1977.

(10) An administrative revision of the Air Quality Surveillance Network was submitted by the Louisiana Air Control Commission on April 3, 1978. (Non regulatory)

(11) Revisions to Regulation 19.0, Emission Standards for Particulate Matter, as adopted on November 30, 1977, were submitted by the Governor on December 9, 1977.

(12) Minor changes and administrative revisions to regulations 2.0, 3.0, 4.0, 5.0, 6.0, 7.0, 8.0, 9.0, 10.0, 11.0, 12.0, 13.0, 14.0, 15.0, 16.0, and 17.0 of the Louisiana SIP were submitted by the Governor on December 9, 1977.

(13) A variance to Regulation 19.5 for Kaiser Aluminum & Chemical Corporation at Norco, Louisiana was submitted by the Governor on August 31, 1978.

(14) Revisions to the Air Control Regulations 18.1, 18.3, 18.5, 18.6–18.6.2, 18.7, 20.1–20.8, 21.1–21.6.4, 23.0–23.4.2, 24.1–24.5, 24.6.2, 24.7–24.7.3, 24.8, 25.0–25.6.2, 26.0–26.2, 26.4–26.8.2, 27.0–27.5.4, 28.0–28.6.2 and 30.0, as adopted by the Louisiana Air Control Commission on November 30, 1977, were submitted by the Governor on December 9, 1977.

(15) Revisions to the plan for attainment of standards for ozone (Part D requirements) were submitted by the Governor on April 30, 1979.

(16) Evidence of notice and public hearing for the April 30, 1979 plan was submitted by the Governor on June 20, 1979.

(17) Emission inventory information, emission reduction information, a certification of the lack of major degreasing sources, and a commitment to adopt future regulations were submitted by the Louisiana Air Control Commission on August 28, 1979 (non-regulatory).

(18) Schedule for the modification and submittal of regulations 22.6 and regulation 6.3.8 were submitted by the Louisiana Air Control Commission on October 11, 1979 (non-regulatory).

(19) Regulations 22.17 and 22.18, adopted by the Louisiana Air Control Commission on September 25, 1979 were submitted by the Governor on October 18, 1979.

(20) On January 10, 1980, the Governor submitted final revisions to the ambient monitoring portion of the plan.

(21) Revised Regulation 22.8(c) was submitted by the Governor on June 20, 1979. This regulation was adopted by the Louisiana Air Control Commission on March 27, 1979.

(22) Revised Regulation 22.5 was submitted by the Governor on April 30, 1979. This regulation was adopted by the Louisiana Air Control Commission on March 27, 1979. A second revision to Regulation 22.5 was submitted by the Governor on July 7, 1979, as adopted by the Louisiana Air Control Commission on June 26, 1979.

(23) Revised Regulations 6.3.8, 22.3, 22.6.1, 22.6.2, 22.10, and 22.12.4 were submitted by the Governor on December 10, 1979. These regulations were adopted by the Louisiana Air Control Commission on November 27, 1979. A second revision to Regulation 6.3.8 was submitted by the Governor on October 23, 1980. The second revision was adopted by the Louisiana Air Control Commission on September 25, 1980.

(24) Revisions to the Air Control Regulations 24.6.1 and 24.7.4, as adopted by the Louisiana Environmental Control Commission on March 27, 1979, were submitted by the Governor on April 30, 1979.

(25) Revised Regulations 22.9.2, 22.9.3(b), 22.19, 22.20, 22.21, 22.22 and 22.23 and revised Regulation 4.0 (i.e. sections 4.99 through 4.116) were adopted by the State on November 27, 1979 and submitted by the Governor on December 10, 1979; and revised Regulations 22.3 and 22.20.2 were adopted by the State on July 22, 1980 and submitted by the Governor on September 12, 1980.

(26) Revised Regulations 22.9.3(b), 22.20.3, and 22.23.7 were adopted by the State on December 11, 1980 and submitted by the Governor on January 12, 1981; revised Regulation 22.21.2(E) was adopted by the State on April 23, 1981 and submitted by the Governor on June 3, 1981; and, revised Regulation 22.19.2(B) was adopted by the State on

June 25, 1981 and submitted by the Governor on July 22, 1981.

(27) Revisions to the Air Control Regulations 6.1.1, 18.2, 18.4, 18.6.3, 19.5.1, 24.9.1, 24.9.2, 26.3.1, 26.3.2 and 51.11, as adopted by the Louisiana Environmental Control Commission on September 25, 1980, were submitted by the Governor on October 23, 1980.

(28) Revisions to the plan for permit fee systems, interstate pollution abatement, public availability of emission data, maintenance of pay, permit public comment, and public notification of exceedances of the primary national ambient air quality standards (NAAQS), were submitted by the Governor on April 30, 1979. In addition, revised submittals for permit fee schedules were submitted on July 7, 1979; September 12, 1980; October 23, 1980; and January 12, 1981. The September 12, 1980 letter also included a new § 51.285 (a), (b) and (c). Finally, the State sent a notification letter on August 7, 1979, which corrected a typographical error in the maintenance of pay revision.

(29) A revision to the Air Control Regulations 22.9.3(d) as adopted by the Louisiana Air Control Commission on December 11, 1980, was submitted by the Governor on January 12, 1981.

(30) Revisions to the Air Control Regulations 8.5.1, 22.3.1.1, 22.3.1.2, and 22.10, as adopted by the Louisiana Air Control Commission on April 23, 1981, were submitted by the Governor on June 3, 1981.

(31) A revision to the Air Control Regulation 22.9.3(a), as adopted by the Louisiana Air Control Commission on May 28, 1981, was submitted by the Governor on June 3, 1981.

(32) A revision to the Air Control Regulation 22.3.2, as adopted by the Louisiana Air Control Commission on July 23, 1981, was submitted by the Governor on August 17, 1981.

(33) The Louisiana State Implementation Plan for lead and Regulations for—the Control of Air Pollution from lead, 10.0–10.3 and 19A.0, were submitted to EPA on July 27, 1979, by the Governor of Louisiana as adopted by the Louisiana Air Control Commission on July 24, 1979. Letters of Clarification dated January 6, 1982, April 1, 1982 and May 4, 1982 also were submitted. No action is taken on the Baton Rouge area.

(34) Section 6.1 of Regulation 6.0 amended and adopted by the Louisiana Environmental Control Commission on October 22, 1981, was submitted by the Governor on November 30, 1981.

(35) Revisions to the Air Control Regulations 4.102, 4.110, 22.20.2 and 22.21.2(D), as adopted by the Louisiana Environmental Control Commission on December 11, 1980, were submitted by the Governor on January 12, 1981.

(36) [Reserved]

(37) Revisions to the Air Control Regulations 4.14, 4.36, 6.6, 22.3.1.1, and 22.3.1.2, as adopted by the Louisiana Environmental Control Commission on February 26, 1981, were submitted by the Governor on March 25, 1981.

(38) Revisions to the Air Control Regulations 17.13, 23.4.1.1 and 23.4.4, as adopted by the Louisiana Environmental Control Commission on January 28, 1982, were submitted by the Governor on February 15, 1982.

(39) A revision to section 2210 of the Louisiana Air Control Law was submitted to EPA on March 10, 1982. The Section was renamed Section 1077 of the Environmental Affairs Act, by the Louisiana Legislature, and was effective January 1, 1980.

(40) The Louisiana State Implementation Plan for lead for the Baton Rouge area was submitted on July 27, 1979, with letters of clarification and revisions dated January 4, 1983, September 15, 1983, September 30, 1983. The final lead control plan was submitted in a letter dated October 31, 1983, as adopted by the Louisiana Air Control Commission on October 20, 1983.

(41) Revisions to sections 2.3, 3.1, 3.4, and 4.1 of the Rules and Regulations for the Fee System of the Air Quality Control Program, as adopted by the Louisiana Environmental Control Commission on January 26, 1983, were submitted by the Louisiana Department of Natural Resources (now the Department of Environmental Quality), Air Quality Division, on November 17, 1983.

(42) Deletion of Air Control Regulation 14.0, and deletion of hydrocarbon guideline standard from Table 1, 1a, and 2, as adopted by the Louisiana Environmental Control Commission on

July 28, 1983, was submitted by the Governor on October 19, 1983.

(43) Revisions to the Air Control Regulation 22.22 as adopted by the Louisiana Environmental Control Commission on September 23, 1982, and submitted by the Governor on July 14, 1983.

(i) *Incorporation by reference.* (A) Regulation 22.22.1(A) and 22.22.2(A) Letter dated July 14, 1983, from the State of Louisiana and which change the reference for the test methods from a CTG document to the Louisiana Air Quality Regulations Division's Source Test Manual. These regulations were adopted on September 23, 1982.

(44) On October 4, 1985, the Governor submitted a revision entitled, ''Protection of Visibility for Mandatory Class I Federal Areas,'' July 12, 1985. This submittal included new source review and visibility monitoring strategy as adopted by the Secretary of the Louisiana Department of Environmental Quality in October 1985.

(45) On August 14, 1985, the Governor of Louisiana submitted a Prevention of Significant Deterioration (PSD) Plan including Air Quality Regulations—Part V, (sections 90.1–90.19) as adopted by the Secretary of the Department of Environmental Quality on May 23, 1985. Air Quality Regulations—Part V provides authority for the State to implement the PSD program in certain areas of the State. Letters of commitment for air quality modeling (dated September 30, 1985) and Federal stack height and dispersion technique regulation (dated June 3, 1986) were submitted by the Secretary of Louisiana Department of Environmental Quality.

(i) *Incorporation by reference.* (A) Louisiana Air Quality Regulations—Part V, Prevention of Significant Deterioration of Air Quality, except that no provision of this part applies to Indian Reservations meaning any Federally recognized reservation established by Treaty, Agreement,Executive Order, or Act of Congress, as adopted on May 23, 1985.

(B) A letter from the Secretary of Louisiana Department of Environmental Quality dated September 30, 1985, which commits the Department to use only the EPA approved air quality models in accordance with the provisions of 40 CFR 51.24(1) [now 40 CFR 51.166(1)] and to submit a stack height and dispersion techniques SIP revision by April 8, 1986.

(C) A letter from the Secretary of Louisiana Department of Environmental Quality dated June 3, 1986, which certifies that the Department interprets the provisions of section 90.8 of Louisiana PSD regulations as having the same meaning as the Federal stack height and dispersion technique regulation, 40 CFR 51.1(hh)-(kk) [now 40 CFR 51.100(hh)-(kk)], promulgated by EPA in the FEDERAL REGISTER of July 8, 1985, and that the State will apply, implement, and enforce these requirements in the PSD permitting process.

(D) A narrative explanation and additional requirements entitled ''Prevention of Significant Deterioration Revisions to the Louisiana State Implementation Plan''.

(46) On January 6, 1988, the Governor of Louisiana submitted a revision to the State Implementation Plan (SIP) that contained Air Quality Regulations, LAC 33: Part III, Section 921, Stack Heights, as adopted by the Secretary of the Department of Environmental Quality on December 20, 1987. Section 921, Stack Heights, enables the State to ensure that the degree of emission limitation required for the control of any air pollutant under its SIP is not affected by that portion of any stack height which exceeds GEP or by any other dispersion technique.

(i) *Incorporation by reference.* (A) Louisiana Air Quality Regulations—LAC 33: Part III, Section 921, Stack Heights, as adopted by the Secretary of the Department of Environmental Quality on December 20, 1987.

(ii) Other material—none.

(47) A revision exempting four rural carbon black plants—Ashland Chemical, Louisa, LA; Cabot Corporation, Centerville, LA; Cabot Corporation, Ville Platte, LA; and Columbian Chemicals, Franklin, LA—from further controls on acetylene emissions as required under Louisiana Air Quality Regulation 22.8 received from the Governor on January 12, 1987, and amended May 13, 1987.

(i) *Incorporation by reference.* (A) A letter dated May 29, 1987, from Martha

Madden, Secretary, Louisiana Department of Environmental Quality, to the Governor of Louisiana approving the exemptions from further controls on acetylene emissions for the four rural carbon black plants and ordering each facility to maintain its emissions at or below the levels specified in the attached summary of emissions.

(ii) *Additional material.* (A) A summary of VOC emissions for each of the four rural carbon black plants exempted from further controls on acetylene emissions under Louisiana Air Quality Regulation 22.8.

(48) Part II of the Visibility Protection Plan was submitted by the Governor on October 26, 1987.

(i) *Incorporation by reference.* (A) Revision entitled, ''Louisiana State Implementation Plan Revision: Protection of Visibility: Proposed Part II Long-Term Strategy, October 26, 1987''. This submittal includes a visibility long-term strategy and general plan provisions as approved and adopted by the Secretary of the Louisiana Department of Environmental Quality on October 26, 1987.

(B) Letter dated October 26, 1987, from Secretary of Louisiana Department of Environmental Quality (LDEQ), to the Governor approving the SIP revision.

(ii) *Additional material.* (A) Letter dated June 16, 1988, from Administrator, Air Quality Division, LDEQ, to Chief, SIP/New Source Section (6T–AN), EPA Region 6, committing to make its three-year periodic review report available to the public as well as to EPA.

(49) The recodified and revised regulations of the Louisiana Administrative Code, Title 33, Part 3 (LAC:33:III) that were adopted by the State effective December 20, 1987, and submitted by the Governor by letters dated January 6, 1988, and October 4, 1988, for inclusion in the SIP. These regulations include LAC:33:III: Chapters 1, 5, 7, 9, 11, 13, 15, 17, 23, 56, 60, 63, and 65, except LAC:33:III:111 ''Particulate matter,'' and ''Suspended particulate matter,'' LAC:33:III:505.J, and LAC:33:III:505.L, which were previously disapproved, and LAC:33:III:6099, which was withdrawn by the Governor.

(i) *Incorporation by reference.* (A) Louisiana Administrative Code, Title 33, Part 3, Chapters 1, 5, 7, 9, 11, 13, 15, 17, 23, 56, 60, 63, and 65 as adopted by Louisiana Department of Environmental Quality on December 20, 1987, except LAC:33:III: section 111 ''Particulate matter,'' ''Suspended particulate matter,'' section 505.J, section 505.L, and section 6099.

(ii) *Additional material.* (A) A letter dated December 16, 1987, from Martha Madden, Secretary of the Louisiana Department of Environmental Quality, to the Governor of Louisiana, approving the codified air quality regulations effective December 20, 1987.

(50) The Louisiana State Implementation Plan for PM_{10} as submitted by the Governor in a letter dated July 26, 1988, and adopted by the State effective June 20, 1988.

(i) *Incorporation by reference.* (A) Revisions to the Louisiana Administrative Code, Title 33, Chapter III, Sections 111, 509.B, 509.I.8.a, 709, 1301.B, 1303.A, 1305.A., 1311.B, 1311.C, 1313.C, 1315, 1319.G, 5609.A.1, 5609.A.2, 5609.A.3, and Tables 1, 1a, and 2 of chapter 7 as adopted effective June 20, 1988.

(B) A letter dated May 22, 1989, from Mike D. McDaniel, Louisiana Department of Environmental Quality, to William B. Hathaway, U.S. Environmental Protection Agency.

(ii) *Additional material.* (A) A letter dated July 26, 1988, from Paul H. Templet, Secretary, Louisiana Department of Environmental Quality, to the Governor of Louisiana approving the adoption of amendments to the Louisiana Air Quality Regulations to implement the new PM_{10} standard effective June 20, 1988.

(B) A narrative supplement to the Louisiana PM_{10} submitted by the Governor in a letter dated July 26, 1988.

(51) Revision to the Louisiana Lead State Implementation Plan (SIP) submitted by the Governor in a letter dated July 18, 1986.

(i) *Incorporation by reference.* (A) An amended Compliance Order dated January 31, 1986, issued by the Secretary of the State of Louisiana Department of Environmental Quality in the matter of Ethyl Corporation, Baton Rouge, Louisiana.

(ii) *Additional material.* (A) Computer modeling submitted by letter dated May 27, 1988, from Doug Walters, Louisiana Department of Environmental Quality, to Joe Winkler, U.S. Environmental Protection Agency.

(B) Explanatory letter dated January 27, 1989, from Gustave Von Bodungen, Louisiana Department of Environmental Quality, to Gerald Fontenot, U.S. Environmental Protection Agency.

(52) On October 31, 1983, the Governor submitted a request to revise the Louisiana SIP to include an Alternative Emission Reduction Plan for the Vulcan Materials Company facility located at Geismar, Ascension Parish. A permit was issued by LDEQ on March 24, 1983 (#1829T), but after several revisions, the final permit for the trade is #1829T (M–2), issued July 28, 1989. This Bubble uses credits obtained from installation of a vapor recovery system on a tank farm of five VOC storage tanks in lieu of controls on one process vent and one VOC storage tank.

(i) *Incorporation by reference.* (A) LDEQ Permit number 1829T (M–2), Revision of Bubble Permit—Vulcan Chemicals Company, Geismar, Ascension Parish, Louisiana, issued July 28, 1989.

(ii) *Additional material.* (A) Letter dated June 28, 1989, from the Administrator of the Louisiana Office of Air Quality, giving assurances that the State has resources and plans necessary to strive toward attainment and maintenance of the NAAQS for ozone taking into account the influence of this Bubble on air quality.

(53) On May 5, 1986, the Governor submitted a request to revise the Louisiana SIP to include an alternate Emission Reduction Plan for the American Cyanamid Company Fortier Plant located at Westwego, Jefferson Parish. A permit was issued by LDEQ on October 17, 1984 (#1896), but after several revisions, the final permit for the trade is #1896 (M–2), issued July 20, 1989. This Bubble uses credits obtained from the change of service of three storage tanks from VOC to non-VOC usage to offset reductions required by controlling one methanol storage tank.

(i) *Incorporation by reference.* (A) LDEQ permit number 1896 (M–2) issued July 20, 1989, a Revision to Bubble Permit No. 1896 (M–1)—American Cyanamid Company, Westwego, Jefferson Parish, Louisiana.

(ii) *Additional material.* (A) Letter dated June 6, 1989, from the Administrator of the Louisiana Office of Air Quality, giving the State position that the Volatile Organic Compounds that have been shifted out of the emission reduction credit donating tanks have not been shifted elsewhere in the nonattainment area.

(B) Letter received by EPA on March 31, 1989, from Mr. Addison Tatum of the State of Louisiana, including calculations for the permit.

(54) A revision to allow an alternative emission reduction plan (''bubble'') for the Vista Chemical Company facility in Westlake, Louisiana, as submitted by the Governor on November 22, 1983, and amended by Louisiana Department of Environmental Quality Air Quality Division permit #1828 M–2 issued September 25, 1986.

(i) *Incorporation by reference.* (A) Louisiana Department of Environmental Quality Air Quality Division permit #1828 M–2 issued September 25, 1986.

(ii) *Additional material.*—None.

(55) A revision to allow an alternative emission reduction plan [''bubble''] for the Union Carbide facility in Hahnville, Louisiana, as submitted by the Governor on October 19, 1983, and amended by Louisiana Department of Environmental Quality Air Quality Division permit #1836T(M–1) issued April 23, 1987, and revised on May 5, 1990.

(i) *Incorporation by reference.* (A) Louisiana Department of Environmental Quality Air Quality Division permit #1836T(M–1) issued April 23, 1987, and revised on May 5, 1990.

(ii) *Additional material.*—None.

(56) Revisions to Louisiana's volatile organic compound regulations were submitted by the Governor on June 13, 1990.

(i) *Incorporation by reference.* (A) Revisions to Title 33, Environmental Quality, Part III. Air, Chapter 21. Control of Emission of Volatile Organic Compounds, Subchapter B. Organic Solvents, Section 2123. Organic Solvents, paragraphs C.6. and D.3., effective February 20, 1990.

(57) Revisions to the Louisiana State Implementation Plan for LAC:33:III: Section 509 Prevention of Significant Deterioration (PSD) sections (509)(B) (Baseline Area) (1), 509(B) (Baseline Area) (2), 509(B) (Baseline Concentration) (1), (509)(B) (Baseline Concentration) (1)(b), 509(B) (Baseline Concentration) (2)(a), 509(B) (Baseline Concentration) (2)(b), 509(B) (Baseline Date) (1)(a), 509(B) (Baseline Date) (1)(b), 509(B) (Baseline Date) (2), 509(B) (Baseline Date) (2)(a), 509(B) (Baseline Date) (2)(b), 509(B) (Net Emission Increases) (4), 509(D), and 509(P)(4), as adopted by the Secretary of Louisiana Department of Environmental Quality (LDEQ) on July 20, 1990, were submitted by the Governor on October 26, 1990.

(i) *Incorporation by reference.* (A) LAG:33:III: Section 509 Prevention of Significant Deterioration Sections (509)(B) (Baseline Area) (1), 509(B) (Baseline Area) (2), 509(B) (Baseline Concentration) (1)(a), (509)(B) (Baseline Concentration) (1)(b), 509(B) (Baseline Concentration) (2)(a), 509(B) (Baseline Concentration) (2)(b), 509(B) (Baseline Date (1)(a), 509(B) (Baseline Date) (1)(b), 509(B) (Baseline Date) (2), 509(B) (Baseline Date) (2)(a), 509(B) (Baseline Date) (2)(b), 509(B) (Net Emission Increase) (4), 509(D), and 509(P)(4) as amended on July 20, 1990.

(ii) *Additional material.*—None.

(58) Louisiana Air Quality Regulation section 6.6 as revised and adopted by the Louisiana Environmental Control Commission on February 26, 1981, submitted by the Governor on March 25, 1981, and approved by the Environmental Protection Agency on June 9, 1982.

(i) *Incorporation by reference.* (A) Louisiana Air Quality Regulation section 6.6 as revised and adopted by the Louisiana Environmental Control Commission on February 26, 1981, submitted by the Governor on March 25, 1981, and approved by the Environmental Protection Agency on June 9, 1982.

(ii) *Additional material.* (A) Letter dated March 24, 1981, from the Secretary of the Louisiana Department of Natural Resources to the Governor of Louisiana acknowledging approval of Louisiana Air Quality Regulation section 6.6 by the Louisiana Environmental Control Commission effective on February 26, 1981.

(59) A revision to the Louisiana State Implementation Plan (SIP) to include revisions to LAC, Title 33, ''Environmental Quality,'' Part III. Air, Chapter 15. Emission Standards for Sulfur Dioxide, effective April 20, 1992, and submitted by the Governor by cover letter dated August 5, 1992.

(i) *Incorporation by reference.* (A) Revisions to LAC, Title 33, ''Environmental Quality,'' Part III. Air, Chapter 15. Emission Standards for Sulfur Dioxide, Section 1501, ''Degradation of Existing Emission Quality Restricted;'' Section 1503, ''Emission Limitations;'' Table 4, ''Emissions—Methods of Contaminant Measurement;'' Section 1505, ''Variances;'' Section 1507, ''Exceptions;'' Section 1509, ''Reduced Sulfur Compounds (New and Existing Sources);'' Section 1511, ''Continuous Emissions Monitoring;'' and Section 1513, ''Recordkeeping and Reporting,'' effective April 20, 1992.

(60) A revision to the Louisiana State Implementation plan (SIP) to include revisions to Louisiana Administrative Code (LAC), Title 33, Environmental Quality, Part III. Air, Chapter 1, Chapter 21, and Chapter 61 as submitted by the Governor on June 13, 1990, October 26, 1990, May 24, 1991, and March 24, 1992.

(i) *Incorporation by reference.* (A) LAC, Title 33, Environmental Quality, Part III. Air, Chapter 21 (December 1987). Control of Emission of Organic Compounds, except section 2105. Storage of Volatile Organic Components (Small Tanks).

(B) Revisions to LAC, Title 33, Environmental Quality, Part III. Air, Chapter 1. General Provisions, section 111. Definitions—Administrator, Administrative Authority*, Attainment Areas, Nonattainment Areas, SIP, Volatile Organic Compound, and Chapter 21. Control of Emission of Organic Compounds, Subchapter A. General, section 2103. Storage of Volatile Organic Compounds paragraphs A., C., D.1., D.1.a. through D.1.d., D.2., D.2.a., D.2.b., D.3., E., F., H.1., H.2., I. effective January 20, 1990.

(C) Revisions to LAC, Title 33, Environmental Quality, Part III. Air, Chapter 21. Control of Emission of Organic

Compounds Subchapter A. General, section 2107. Volatile Organic Compounds-Loading, section 2109. Oil/Water-Separation, paragraphs A.1. through A.4., B. through D., section 2113. Housekeeping, paragraphs A.1 through A.3., A.5., section 2117. Exemptions, section 2119. Variances B., and Subchapter D. Cutback Paving Asphalt section 2127. Cutback Paving Asphalt, paragraphs A., B., C.1., C.2., C.3., D., D.1., D.1.b., D.1.c., D.1.d., and D.2., effective February 20, 1990.

(D) Revisions to LAC, Title 33, Environmental Quality, Part III. Air, Chapter 21. Control of Emission of Organic Compounds, Subchapter B. Organic Solvents, section 2123. Organic Solvents, paragraphs C., C.1. through C.5., C.7. through C.9., effective February 20, 1990.

(E) Revisions to LAC, Title 33, Environmental Quality, Part III. Air, Chapter 21. Control of Emission of Organic Compounds, Subchapter F. Gasoline Handling, section 2131. Filling of Gasoline Storage Vessels, paragraphs A., B., B.1., B.3., D., D.1., D.4., D.5., E., F., and G., section 2133. Gasoline Bulk Plants paragraphs A., A.1., A.3. through A.6., B., B.3., B.4., C. and D., section 2135. Bulk Gasoline Terminals paragraphs A., B., B.1.a., B.1.a.i., B.1.a.iii., B.1.d., B.2. through B.5., and C. through E., E.1. through E.4., and section 2137. Gasoline Terminal Vapor-Tight Control Procedure. effective July 20, 1990.

(F) Revisions to LAC, Title 33, Environmental Quality, Part III. Air, Chapter 21. Control of Emission of Organic Compounds Subchapter A. General, section 2101. Compliance Schedules, section 2115. Waste Gas Disposal paragraphs A., B., C., D., F., G., H., I.1. through I.5., J. through K., section 2121. Fugitive Emission Control paragraphs B., B.1, B.2., C., C.1.b., C.1.b.i., C.1.b.ii., C.1.b.iii., C.1.c, C.2., C.2.b., C.2.b.i., C.4., C.4.c., C.4.d., C.5. and G., Subchapter C. Vapor Degreasers, section 2125. Vapor Degreasers paragraphs A., A.1., A.2., A.2.i. through A.2.m., A.3., A.3.a. through A.3.d., B., B.1., B.7., B.8., C., C.1., C.1.a. through C.1.c., C.1.i., C.1.j., and D. through G., Subchapter E. Perchloroethylene Dry Cleaning Systems, section 2129. Perchloroethylene Dry Cleaning Systems paragraphs A., A.1., A.2., A.2.a. through A.2.c., C., and D., Subchapter H. Graphic Arts, section 2143. Graphic Arts (Printing) by Rotogravure and Flexographic Processes paragraphs A., A.1., A.3., A.5., B., C. and D., Subchapter I. Pharmaceutical Manufacturing Facilities, section 2145. Pharmaceutical Manufacturing Facilities, paragraphs A., A.1., A.1.c., and E. through G. effective November 20, 1990.

(G) Revisions to LAC, Title 33, Environmental Quality, Part III. Air, Chapter 21. Control of Emissions of Organic Compounds Subchapter A. General, section 2103. Storage of Volatile Organic Compounds paragraphs B.,D., D.2.c. through D.2.e., G., H.3., I.2.c., I.4. and I.5., section 2107. Volatile Organic Compounds-Loading paragraphs D.3. and D.4., section 2109. Oil/Water Separation paragraphs A., B.4., and B.5., section 2111. Pumps and Compressors, section 2113. Housekeeping paragraph A.4., section 2119. Variances paragraph A.; Subchapter D. Cutback Paving Asphalt, section 2127. Cutback Paving Asphalt paragraphs C. and D.1.a. effective April 20, 1991.

(H) Revisions to LAC, Title 33, Environmental Quality, Part III. Air, Chapter 21. Control of Emission of Organic Compounds, section 2115. Waste Gas Disposal paragraphs I., K., and K.4., section 2121. Fugitive Emission Control paragraphs A., C.1., C.1.b.iv. through C.1.b.vi., C.4.a., C.4.b., C.4.h., D., D.1., D.1.b. through D.1.f., and D.2., section 2123. Organic Solvents paragraphs A., A.1. through A.3., B., B.1., B.1.a. through B.1.c., C.11., D., D.1. through D.9., E., E.1. through E.7., F., and F.1. through F.4., Subchapter F. Gasoline Handling, section 2131. Filling of Gasoline Storage Vessels paragraphs D.2. and D.3., section 2135. Bulk Gasoline Terminals paragraph E.5., Subchapter G-Petroleum Refinery Operations, section 2139. Refinery Vacuum Producing Systems paragraphs A. and B. and section 2141. Refinery Process Unit Turnarounds effective July 20, 1991.

(I) Revisions to LAC, Title 33, Environmental Quality, Part III. Air, Chapter 61. Division's Sources Test Manual, Subchapter A. Method 43–Capture Efficiency Test Procedures section 6121 through section 6131 effective July 20, 1991.

(J) Revisions to LAC, Title 33, Environmental Quality, Part III. Air Chapter 1. General Provisions, section 111. Definitions-Coating, Department, Distance from Source to Property Line, Exceedance, Hydrocarbon, Leak, Miscellaneous Metal Parts and Products Coating, Nonattainment Area, Ozone Exceedance, SIP effective August 20, 1991.

(61) A revision to the Louisiana SIP to include revisions to LAC, Title 33, ''Environmental Quality,'' Part III. Air, Chapter 21, Control of Emission of Organic Compounds, Section 2132—Stage II Vapor Recovery Systems for Control of Vehicle Refuelling Emissions at Gasoline Dispensing Facilities effective November 20, 1992, and submitted by the Governor by cover letter dated November 10, 1992.

(i) *Incorporation by reference.* (A) Revisions to LAC, Title 33, ''Environmental Quality,'' Part III. Air, Chapter 21, Control of Emission of Organic Compounds, Section 2132—Stage II Vapor Recovery Systems for Control of Vehicle Refuelling Emissions at Gasoline Dispensing Facilities, effective November 20, 1992; and Chapter 65, Section 6523—Fee Schedule Listing, effective November 20, 1992.

(ii) *Additional materials.* (A) November 15, 1993, narrative plan addressing: Legal authority, control strategy, compliance schedules, air quality surveillance, public notice, determination of regulated universe, Louisiana Department of Environmental Quality recordkeeping, facility recordkeeping, annual in-use above ground inspections, program penalties, training, and benefits.

(62) Alternative emission reduction (bubble) plan for the Dow Chemical facility located in Plaquemine, Iberville Parish, as adopted by the Louisiana Environmental Control Commission on July 28, 1983, submitted by the Governor on October 19, 1983, and amended by the Louisiana Department of Environmental Quality with permit number 1838T(M–2) issued on October 16, 1991.

(ii) Incorporation by reference.

(A) Permit number 1838T(M–2) as issued by the Louisiana Department of Environmental Quality on October 16, 1991.

(ii) *Additional material.* (A) Letter dated September 17, 1991, from the Administrator of the Office of Air Quality at the Louisiana Department of Environmental Quality to the Chief of the Planning Section at the Air Programs Branch of the U.S. Environmental Protection Agency—Region 6, furnishing State assurances.

(63) The State is required to implement a Small Business Stationary Source Technical and Environmental Compliance Assistance Program (PROGRAM) as specified in the plan revision submitted by the Governor on October 22, 1992. This plan submittal, as adopted by the Secretary of the Louisiana Department of Environmental Quality (LDEQ) on October 22, 1992, was developed in accordance with section 507 of the Clean Air Act (CAA).

(i) *Incorporation by reference.* (A) Enrolled House Bill No. 1319 (Act 1037, Regular Session, 1992), signed into law by the Governor on July 13, 1992, and effective upon signature, enacting Louisiana Revised Statutes (R.S.) 30:2061 and 2062 and R.S. 36:239(H). Included in Act 1037 are provisions establishing a small business stationary source compliance assistance program; creating the State Ombudsman Office for small business; creating a Compliance Advisory Panel (CAP); establishing membership of the CAP; and establishing CAP powers, duties, and functions.

(B) Louisiana R.S. 30:2060N.(6), ''Toxic air pollutant emission control program'', (the small business stationary source technical and environmental compliance assistance program subsection), as in effect on October 22, 1992.

(C) State of Louisiana Executive Order No. EWE 92–4 dated February 10, 1992, and effective upon signature, creating and establishing an Office of Permits within the Executive Department, Office of the Governor.

(D) Letter from Louisiana Governor Edwards to Mr. Kai Midboe, Secretary, LDEQ, dated February 20, 1992, designating the Governor's Office of Permits as the official State office to serve as Ombudsman for the PROGRAM per the mandate of section 507 of the Federal CAA. The Coordinator of the Office of Permits will be responsible for administering the Small Business Ombudsman portion of the PROGRAM.

(ii) *Additional material.* (A) Narrative SIP Revision entitled, ''Louisiana SIP, Concerning CAA Amendments of 1990, Section 507, Small Business Stationary Source Technical and Environmental Compliance Assistance (Program); November 15, 1992.''

(B) ''State of Louisiana Memorandum of Understanding Between the Governor's Office of Permits and the Louisiana Department of Environmental Quality'', signed (and effective) on April 7, 1992, by Mr. Kai David Midboe, Secretary, LDEQ, and Ms. Martha A. Madden, Coordinator, Governor's Office of Permits.

(C) Legal opinion letter dated October 22, 1992, from James B. Thompson, III, Assistant Secretary for Legal Affairs and Enforcement, LDEQ, to Mr. B. J. Wynne, Regional Administrator, EPA Region VI, regarding ''Appointment to Small Business Advisory Panel''.

(64) Revisions to the Louisiana SIP addressing VOC RACT catch-up requirements were submitted by the Governor of Louisiana by letters dated December 21, 1992, and April 14, 1993.

(i) *Incorporation by reference.* (A) Revisions to LAC, Title 33, Environmental Quality, Part III. Air; Chapter 21. Control of Emissions of Organic Compounds, Subchapter A. General; section 2103. Storage of Volatile Organic Compounds, paragraphs G., I., I.4.; section 2109. Oil/Water Separation, paragraph B.4.; Subchapter B. Organic Solvents; section 2123. Organic Solvents, paragraph D.6.; Subchapter C. Vapor Degreasers; section 2125. Vapor Degreasers, paragraph D.; Subchapter F. Gasoline Handling; section 2131. Filling of Gasoline Storage Vessels, paragraphs D., D.1., D.3., G.; section 2135. Bulk Gasoline Terminals, paragraph A.; Subchapter H. Graphic Arts; section 2143. Graphic Arts (Printing) by Rotogravure and Flexographic Processes, paragraph B, as adopted by LDEQ on October 20, 1992.

(B) Revisions to LAC, Title 33, Environmental Quality, Part III. Air; Chapter 21. Control of Emissions of Organic Compounds, Subchapter A. General; section 2115. Waste Gas Disposal, introductory paragraph, paragraphs H., H.1., H.1.a through H.1.d, H.2, H.2.a, H.2.b, H.3, L., as adopted by LDEQ on March 20, 1993.

(ii) *Additional material.* (A) Letters dated November 10, 1992 and December 21, 1992, signed by Edwin Edwards, Governor of Louisiana.

(B) Letter dated April 14, 1993, signed by Edwin Edwards, Governor of Louisiana.

(C) Letter of negative declaration dated March 29, 1994, signed by Gustave Von Boduungen, P.E., Assistant Secretary, LDEQ.

(65) Revisions to the Louisiana Department of Environmental Quality Regulation Title 33, Part III, Chapter 9, Section 919, (February 2, 1993), and a technical correction (October 20, 1994). These revisions are for the purpose of implementing an emission statement program for stationary sources within the ozone nonattainment areas.

(i) *Incorporation by reference.* (A) Revisions to LAC, title 33, Part III, Chapter 9, *General Regulations on Control of Emissions and Emissions Standards*, Section 919, *Emission Inventory*, adopted in the *Louisiana Register*, Vol. 19, No. 2, 184–186, February 20, 1993. All subsections except B.2.a. and B.2.d.

(B) Revisions to LAC, title 33, Part III, Chapter 9, *General Regulations on Control of Emissions and Emissions standards*, Section 919, *Emission Inventory*, adopted in the *Louisiana Register*, Vol 20, No. 10, 1102, October 20, 1994. Subsections B.2.a. and B.2.d.

(66) Revisions to the Louisiana Department of Environmental Quality Regulation Title 33, Part III, Chapter 2, Section 223 and Chapter 19, Sections 1951–1973. These revisions are for the purpose of implementing a Clean Fuel Fleet Program to satisfy the Federal requirements for a Clean Fuel Fleet Program to be part of the SIP for Louisiana.

(i) *Incorporation by reference.* (A) Revision to LAC, Title 33, Part III, Chapter 2, Rules and Regulations for the Fee System of the Air Quality Control Programs, Section 223, Fee Schedule Listing, adopted in the *Louisiana Register*, Vol. 20, No. 11, 1263, November 20, 1994.

(B) Revision to LAC, Title 33, Part III, Chapter 19, Mobile Sources, Subchapter B, Clean Fuel Fleet Program,

Sections 1951–1973, adopted in the *Louisiana Register*, Vol. 20, No. 11, 1263–1268, November 20, 1994.

(67) A revision to the Louisiana State Implementation Plan for General Conformity: LAC 33:III. CHAPTER 14. SUBCHAPTER A ''Determining Conformity of General Federal Actions to State or Federal Implementation Plan'' as adopted by the Louisiana Department of Environmental Quality Secretary and published in the Louisiana Register, Vol. 20, No. 11, 1268, November 20, 1994, was submitted by the Governor on November 10, 1994.

(i) *Incorporation by reference.* (A) Louisiana General Conformity: LAC 33:III. CHAPTER 14. SUBCHAPTER A ''Determining Conformity of General Federal Actions to State or Federal Implementation Plan'' as adopted by the Louisiana Department of Environmental Quality Secretary and published in the Louisiana Register, Vol. 20, No. 11, 1268, November 20, 1994.

(68) A revision to the Louisiana SIP addressing the nonattainment NSR program for Louisiana was submitted by the Governor of Louisiana on March 3, 1993, and November 15, 1993.

(i) *Incorporation by reference.* (A) Revision to LAC, Title 33, Part III. Air, Chapter 5. Permit Procedures, by the addition of Section 504. Nonattainment New Source Review Procedures, as promulgated in the Louisiana Register, Volume 19, Number 2, 176–183, February 20, 1993; effective February 20, 1993, and submitted by the Governor on March 3, 1993.

(B) Revisions to LAC, Title 33, Part III. Air, Chapter 5. Permit Procedures, Section 504. Nonattainment New Source Review Procedures, Subsections: A., Applicability, Paragraphs A(1), A(2), A(3), A(4); D., Nonattainment New Source Requirements, Paragraph D(4); Delete G., Permit Procedures, Public Participation and Notification; Reletter H., Definitions, to G., and revise definitions for Major Modification (paragraphs: a., c.iii, c.iv, c.v.(a)(b), c.vi, c.vii), Major Stationary Source (paragraphs: a., d.i); Delete Table 1; Renumber Table 2, Major Stationary Source/Major Modification Emission Thresholds, to Table 1, and revise Footnote 1., as promulgated in the Louisiana Register, Volume 19, Number 11, 1420–1421, November 20, 1993; effective November 20, 1993, and submitted by the Governor on November 4, 1993.

(ii) *Additional material.* (A) Letter dated January 7, 1994, signed by the Governor of Louisiana, which clarifies that section 504 is to be reviewed under the SIP program.

(69) The Governor of Louisiana submitted revisions to Regulation Louisiana Administrative Code on March 22, 1995 to incorporate changes in the Federal PSD permitting regulations for PM–10 increments.

(i) *Incorporation by reference.* (A) Revisions to Regulation Louisiana Administrative Code 33:III.Chapter 5, Section 509, effective February 20, 1995: Section B. Definitions: Baseline Date; Section B. Definitions: Net Emissions Increase; Section D. Ambient Air Increments; Section I.8.a.; Section K.2.; and Section P.4.

(70) The Louisiana Department of Environmental Quality submitted a redesignation request and maintenance plan for Pointe Coupee Parish on December 20, 1995. The redesignation request and maintenance plan meet the redesignation requirements in section 107(d)(3)(E) of the Act as amended in 1990. The redesignation meets the Federal requirements of section 182(a)(1) of the Clean Air Act as a revision to the Louisiana ozone State Implementation Plan for Pointe Coupee Parish. The EPA therefore approved the request for redesignation to attainment with respect to ozone for Pointe Coupee Parish on December 20, 1996.

(i) *Incorporation by reference.* Letter dated August 31, 1995, from Mr. Gustave Von Bodungen, P.E., Assistant Secretary, Louisiana Department of Environmental Quality, transmitting a copy of the Pointe Coupee Parish maintenance plan for the EPA's approval.

(ii) *Additional material.* (A) Letter dated August 28, 1995, from Governor Edwin E. Edwards of Louisiana to Ms. Jane Saginaw, Regional Administrator, requesting the reclassification and redesignation of Pointe Coupee Parish to attainment for ozone.

(B) The ten year ozone maintenance plan, including emissions projections and contingency measures, submitted to EPA as part of the Pointe Coupee

Parish redesignation request on December 20, 1995.

(71) A revision to the Louisiana SIP addressing the 15 percent rate-of-progress requirements was submitted by the Governor of Louisiana by cover letter dated December 15, 1995. This revision, submitted to satisfy the requirements of section 182(b) of the Clean Air Act (Act), will aid in ensuring that reasonable further progress is made towards attaining the national ambient air quality standard (NAAQS) for ozone.

(i) *Incorporation by reference.* (A) Revisions to LAC, Title 33, Environmental Quality, Part III. Air; Chapter 21. Control of Emissions of Organic Compounds, Subchapter A. General; section 2108. Marine Vapor Recovery, paragraphs B.1., B.2., B.3., B.3.a. through B.3.d., B.4.a., B.4.b., B.5., B.6., D.1.a., D.1.a.i., D.1.a.ii., D.1.b., D.2., D.3., D.4.a., D.4.b., D.4.c., D.4.c.i., D.4.c.ii., D.4.d., D.4.e., D.4.e.i., D.4.e.ii., D.4.f., D.4.g., E.2., E.2.a. through E.2.c., F.1., F.2., F.3., G.1., G.2., as adopted by LDEQ on October 20, 1988.

(B) Revisions to LAC, Title 33, Environmental Quality, Part III. Air; Chapter 21. Control of Emissions of Organic Compounds, Subchapter A. General; section 2108. Marine Vapor Recovery, paragraphs A., B. Definitions-Barge, Crude Oil, Gasoline, Ship, C., C.1., C.2., C.3., C.3.a. through C.3.d. (note: paragraphs B.1., B.2., B.3., and B.3.a. through B.3.d., as adopted on October 20, 1988, were moved to C.1., C.2., C.3., and C.3.a. through C.3.d. without repromulgating), C.4., C.4.a., C.4.b., C.5., C.6. (note: paragraphs B.4.a., B.4.b., B.5., and B.6., as adopted on October 20, 1988, were moved to C.4.a., C.4.b., C.5., and C.6. without repromulgating), D.1., D.1.a. through D.1.c., D.2., D.2.a. through D.2.c., D.3., E., E.1., E.1.a., E.1.a.i., E.1.a.ii., E.1.b., E.2., E.3. (note: D.1.a., D.1.a.i., D.1.a.ii., D.1.b., D.2., and D.3., as adopted October 20, 1988, were moved to E.1.a., E.1.a.i., E.1.a.ii., E.1.b., E.2., and E.3. without repromulgating), E.4., E.4.a., E.4.b., E.4.c., E.4.c.i., E.4.c.ii., E.4.d., E.4.e., E.4.e.i., E.4.e.ii., E.4.f., E.4.g. (note: D.4.a., D.4.b., D.4.c., D.4.c.i., D.4.c.ii., D.4.d., D.4.e., D.4.e.i., D.4.e.ii., D.4.f., and D.4.g, as adopted on October 20, 1988, were moved to E.4.a., E.4.b., E.4.c., E.4.c.i., E.4.c.ii., E.4.d., E.4.e., E.4.e.i., E.4.e.ii., E.4.f., and E.4.g. without repromulgating), E.5., F., F.1., F.2., F.2.a. through F.2.e. (note: E.2. and E.2.a. through E.2.c., as adopted on October 20, 1988, were moved to F.2. and F.2.a through F.2.c. without repromulgating), G., G.1., G.2., G.3. (note: F.1., F.2., and F.3., as adopted October 20, 1988, were moved to G.1., G.2., and G.3. without repromulgating), H., H.1., H.2. (note: G.1. and G.2., as adopted on October 20, 1988, were moved to H.1. and H.2. without repromulgating), as adopted by LDEQ on November 20, 1990.

(C) Revisions to LAC, Title 33, Environmental Quality, Part III. Air; Chapter 21. Control of Emissions of Organic Compounds, Subchapter A. General; section 2122. Fugitive Emission Control for Ozone Nonattainment Areas, paragraphs A., A.1. through A.5., A.6., A.6.a. through A.6.d., B. Definitions-Connector, Good Performance Level, Heavy Liquid Service, Inaccessible Valve/Connector, In Vacuum Service, Light Liquid, Light Liquid Service, Liquid Service, Process Unit, Process Unit Shutdown, Unrepairable Component, C., C.1., C.1.a. through C.1.c., C.2. through C.5., D., D.1., D.1.a., D.1.a.i., D.1.a.ii., D.1.b., D.1.b.i. through D.1.b.v., D.1.c. through D.1.e., D.2., D.2.a., D.2.b., D.2.b.i. through D.2.b.iii., D.3., D.3.a. through D.3.d., D.4., D.4.a. through D.4.k., D.5., E.1.a. through E.1.f., E.2., E.3., E.3.a., E.3.a.i. through E.3.a.v., E.3.b., E.3.b.i. through E.3.b.v., F., F.1., F.2., F.2.a. through F.2.j., F.3., G., G.1. through G.13., as adopted by LDEQ on October 20, 1994.

(D) Revisions to LAC, Title 33, Environmental Quality, Part III. Air; Chapter 21. Control of Emissions of Organic Compounds, Subchapter A. General; section 2122. Fugitive Emission Control for Ozone Nonattainment Areas, paragraphs E., E.1., E.1.g., as adopted by LDEQ on November 20, 1994.

(E) Revisions to LAC, Title 33, Environmental Quality, Part III. Air; Chapter 21. Control of Emissions of Organic Compounds, Subchapter A. General; section 2103. Storage of Volatile Organic Compounds, paragraphs A., B., D.1., D.1.a. through D.1.d., D.2., D.2.a. through D.2.e., E., F., G., G.1. through G.4., H., H.1., H.2., H.2.a. through H.2.e., H.3., I., I.1., I.2., I.2.a. through I.2.c., I.3.

through I.5., as adopted by LDEQ on December 20, 1994.

(F) Revisions to LAC, Title 33, Environmental Quality, Part III. Air;

Chapter 21. Control of Emissions of Organic Compounds, Subchapter A. General; section 2103. Storage of Volatile Organic Compounds, paragraphs C., D., D.3., as adopted by LDEQ on November 20, 1995.

(G) Revisions to LAC, Title 33, Environmental Quality, Part III. Air; Chapter 21. Control of Emissions of Organic Compounds, Subchapter A. General; section 2103. Storage of Volatile Organic Compounds, paragraph D.4., as adopted by LDEQ on December 20, 1995.

(H) Reasonable Further Progress Agreed To Order, dated December 16, 1994, issued by the Assistant Secretary of the State of Louisiana Department of Environmental Quality in the matter of BASF Corporation, Geismar, Louisiana.

(I) Reasonable Further Progress Agreed To Order, dated August 22, 1994, issued by the Assistant Secretary of the State of Louisiana Department of Environmental Quality in the matter of CosMar Company, Inc., Carville, Louisiana.

(J) Reasonable Further Progress Agreed To Order, dated September 26, 1994, issued by the Assistant Secretary of the State of Louisiana Department of Environmental Quality in the matter of Shell Chemical Company, Geismar, Louisiana.

(K) Reasonable Further Progress Agreed To Order, dated September 8, 1994, issued by the Assistant Secretary of the State of Louisiana Department of Environmental Quality in the matter of Uniroyal Chemical Company, Inc., Geismar, Louisiana.

(L) Reasonable Further Progress Agreed To Order, dated September 8, 1994, issued by the Assistant Secretary of the State of Louisiana Department of Environmental Quality in the matter of Vulcan Chemicals, Geismar, Louisiana.

(M) SIP narrative plan entitled, ''Revision to the 15% Rate of Progress Plan and 1990 Emissions Inventory,'' dated December 28, 1995, page 11, Section 2.2, 1996 Target Level Emissions, first paragraph; page 23, Section 5, Table 2—Reductions in Plan; page 173, Appendix G, table—Reductions from Industrial Sources through 1996 Used for the 15% Requirement, which ends on page 174.

(ii) *Additional materials.* (A) SIP narrative plan entitled, ''Revision to 15% Rate of Progress Plan and 1990 Emissions Inventory,'' submitted by the Governor of Louisiana on December 15, 1995, except Section 6. Contingency Measures Documentation, Appendix M. Contingency Reductions Documentation, and Appendix N. Banking Regulations.

(B) Letter dated May 3, 1996, from Gustave Von Bodungen, Louisiana Department of Environmental Quality, to Thomas Diggs, U.S. Environmental Protection Agency, transmitting supplemental documentation for the 15 Percent Rate of Progress Plan.

(72) Revisions to the Louisiana SIP addressing VOC RACT Negative Declarations. The Governor of Louisiana submitted the negative declarations for reasonably available control technology (RACT) for the Baton Rouge ozone nonattainment area on December 15, 1996. Section 172(c)(1) of the Clean Air Act requires nonattainment areas to adopt, at a minimum, RACT to reduce emissions from existing sources. Pursuant to section 182(b)(2) of the Act, for moderate and above ozone nonattainment areas, the EPA has identified 13 categories for such sources and developed the Control Technique Guidelines (CTGs) or Alternate Control Techniques (ACTs) documents to implement RACT at those sources. When no major volatile organic compound (VOC) sources for a CTG/ACT category exist in a nonattainment area, a State may submit a negative declaration for that category. Louisiana's submittal included two negative declaration letters from Mr. Gustave Von Bodungen to Ms. Karen Alvarez dated April 6, 1994, and June 20, 1994, for the following source categories: offset lithography, plastic parts-business machines, plastic parts-others, wood furniture, aerospace coatings, autobody refinishing, and shipbuilding coatings/repair. This submittal satisfies section 182(b)(2) of the Clean Air Act Amendments of 1990 for these particular CTG/ACT source categories for the Baton Rouge ozone nonattainment area.

(i) *Incorporation by reference.* The letter dated December 15, 1995, from the Governor of Louisiana to the Regional Administrator, submitting a revision to the Louisiana SIP for VOC RACT rules, which included VOC RACT negative declarations.

(ii) *Additional material.* (A) The negative declaration letter dated April 16, 1994, from Mr. Gustave Von Bodungen to Ms. Karen Alvarez.

(B) The negative declaration letter dated June 20, 1994, from Mr. Gustave Von Bodungen to Ms. Karen Alvarez.

(73) The Louisiana Department of Environmental Quality submitted a redesignation request and maintenance plan for Calcasieu Parish on December 20, 1995. The redesignation request and maintenance plan meet the redesignation requirements in section 107(d)(3)(E) of the Act. The redesignation meets the Federal requirements of section 182(a)(1) of the Act as a revision to the Louisiana ozone State Implementation Plan for Calcasieu Parish. The EPA therefore approved the request for redesignation to attainment with respect to ozone for Calcasieu Parish on June 2, 1997.

(i) *Incorporation by reference.* Letter dated December 20, 1995, from Governor Edwin E. Edwards of Louisiana to Ms. Jane Saginaw, Regional Administrator, transmitting a copy of the Calcasieu Parish maintenance plan and requesting the redesignation of Calcasieu Parish to attainment for ozone.

(ii) *Additional material.*The ten year ozone maintenance plan, including emissions projections and contingency measures, submitted to EPA as part of the Calcasieu Parish redesignation request on December 20, 1995.

(74) Revisions to the Louisiana Department of Environmental Quality Regulation Title 33, Part III, Chapter 21, Control of Emission of Organic Compounds, submitted by the Governor on December 15, 1995.

(i) *Incorporation by reference.* (A) LAC, Title 33, Part III, Chapter 21, Section 2147, Limiting Volatile Organic Compound Emissions from Reactor Processes and Distillation Operations in the Synthetic Organic Chemical Manufacturing Industry, adopted in the Louisiana Register on April 20, 1995 (LR 21:380).

(B) LAC, Title 33, Part III, Chapter 21, Section 2149, Limiting Volatile Organic Compound Emissions from Batch Processing, adopted in the Louisiana Register on April 20, 1995 (LR 21:387).

(C) LAC, Title 33, Part III, Chapter 21, Section 2151, Limiting Volatile Organic Compound Emissions from Cleanup Solvent Processing, adopted in the Louisiana Register on April 20, 1995 (LR 21:391).

(ii) *Additional material.* (A) Letter of negative declaration for wood furniture dated January 21, 1997, from the State of Louisiana Department of Environmental Quality.

(75) A revision to the Louisiana State Implementation Plan for General Conformity: LAC 33:III. Chapter 14. Subchapter A ''Determining Conformity of General Federal Actions to State or Federal Implementation Plan,'' Section 1405.B as adopted by the Louisiana Department of Environmental Quality Secretary and published in the Louisiana Register, Vol. 23, No. 6, 720, June 20, 1997, was submitted by the Governor on September 8, 1997.

(i) *Incorporation by reference.* (A) Louisiana General Conformity: LAC 33:III. Chapter 14. Subchapter A ''Determining Conformity of General Federal Actions to State or Federal Implementation Plan'', Section 1405.B as adopted by the Louisiana Department of Environmental Quality Secretary and published in the Louisiana Register, Vol. 23, No. 6, 720, June 20, 1997.

(76) [Reserved]

(77) Revisions to the Louisiana Administrative Code, Title 33, Part III, Chapter 21, Section 2149 (LAC 33:III.2149), ''Limiting Volatile Organic Compound Emissions from Batch Processing,'' submitted by the Governor on March 23, 1998.

(i) *Incorporation by reference.* LAC 33:III Chapter 21, revised paragraph 2149.A.2.b; paragraphs 2149.C.2.a, b, and c become paragraphs 2149.C.2.d, e, and f respectively; and add new paragraphs 2149.C.2.a, b, and c, as adopted in the Louisiana Register on November 20, 1997 (LR 23:1507).

(ii) *Additional material.*None.

(78) [Reserved]

(79) Site-specific revision to the 15% Rate-of-Progress plan submitted by the Governor in a letter dated December

20, 1997. The revision provides for a schedule extension for installation of guide pole sliding cover gaskets on 33 external floating roof tanks located at the Baton Rouge refinery of Exxon Company U.S.A.

(i) *Incorporation by reference.* Letters dated July 17, 1997, and September 12, 1997, from the LDEQ to Exxon Company U.S.A. approving the compliance date extension; which are included in the State Implementation Plan submittal entitled, ''Summary of 15% Rate-of-Progress State Implementation Plan Revision,'' dated December 20, 1997.

(ii) *Additional material.* (A) Letter from the Governor of Louisiana dated December 20, 1997, transmitting a copy of the State Implementation Plan revision.

(B) Letters dated November 13, 1996; May 14, 1997; and July 3, 1997; from Exxon Company U.S.A. to the LDEQ requesting the compliance date extension and including a list of the subject tanks, the date of the next maintenance downtime, and emissions estimates for the tanks; which are included in the State Implementation Plan submittal entitled, ''Summary of 15% Rate-of-Progress State Implementation Plan Revision,'' dated December 20, 1997.

[37 FR 10869, May 31, 1972]

EDITORIAL NOTE: For FEDERAL REGISTER citations affecting § 52.999, see the List of CFR Sections Affected, which appears in the Finding Aids section of the printed volume and at *www.fdsys.gov.*

§§ 52.1000–52.1018 [Reserved]