AUTHENTICATED
U.S. GOVERNMENT
INFORMATION
GPO

(7) Such other information as the Secretary may require.

§ 430.53 Processing of applications.

(a) The applicant shall serve a copy of the application, all supporting documents and all subsequent submissions, or a copy from which confidential information has been deleted pursuant to 10 CFR 1004.11, to the Secretary, which may be made available for public review.

(b) Within fifteen (15) days of the receipt of an application, the Secretary will either accept it for filing or reject it, and the applicant will be so notified in writing. Only such applications which conform to the requirements of this subpart and which contain sufficient information for the purposes of a substantive decision will be accepted for filing. Applications which do not so conform will be rejected and an explanation provided to the applicant in writing.

(c) For the purpose of this subpart, an application is deemed to be filed on the date it is accepted for filing.

(d) Promptly after receipt of an application and its acceptance for filing, notice of such application shall be published in the FEDERAL REGISTER. The notice shall set forth the availability for public review of data and information available, and shall solicit comments, data and information with respect to the determination on the application. Except as may otherwise be specified, the period for public comment shall be 60 days after the notice appears in the FEDERAL REGISTER.

(e) The Secretary on his own initiative may convene a hearing if, in his discretion, he considers such hearing will advance his evaluation of the application.

§ 430.54 Referral to the Attorney General.

Notice of the application for exemption under this subpart shall be transmitted to the Attorney General by the Secretary and shall contain (a) a statement of the facts and of the reasons for the exemption, and (b) copies of all documents submitted.

§ 430.55 Evaluation of application.

The Secretary shall grant an application for exemption submitted under this subpart if the Secretary finds, after obtaining the written views of the Attorney General, that a failure to allow an exemption would likely result in a lessening of competition.

§ 430.56 Decision and order.

(a) Upon consideration of the application and other relevant information received or obtained, the Secretary shall issue an order granting or denying the application.

(b) The order shall include a written statement setting forth the relevant facts and the legal basis of the order.

(c) The Secretary shall serve a copy of the order upon the applicant and upon any other person readily identifiable by the Secretary as one who is interested in or aggrieved by such order. The Secretary also shall publish in the FEDERAL REGISTER a notice of the grant or denial of the order and the reason therefor.

§ 430.57 Duration of temporary exemption.

A temporary exemption terminates according to its terms but not later than twenty-four months after the affective date of the rule for which the exemption is allowed.

Subpart F [Reserved]

§§ 430.60–430.75 [Reserved]

APPENDIXES A–B TO SUBPART F OF PART 430 [RESERVED]

PART 431—ENERGY EFFICIENCY PROGRAM FOR CERTAIN COMMERCIAL AND INDUSTRIAL EQUIPMENT

Subpart A—General Provisions

Sec.
431.1 Purpose and scope.
431.2 Definitions.

Subpart B—Electric Motors

431.11 Purpose and scope.
431.12 Definitions.

TEST PROCEDURES, MATERIALS INCORPORATED AND METHODS OF DETERMINING EFFICIENCY

431.14 Sources for information and guidance.
431.15 Materials incorporated by reference.
431.16 Test procedures for the measurement of energy efficiency.
431.17 Determination of efficiency.
431.18 Testing laboratories.
431.19 Department of Energy recognition of accreditation bodies.
431.20 Department of Energy recognition of nationally recognized certification programs.
431.21 Procedures for recognition and withdrawal of recognition of accreditation bodies and certification programs.

ENERGY CONSERVATION STANDARDS

431.25 Energy conservation standards and effective dates.
431.26 Preemption of State regulations.

LABELING

431.31 Labeling requirements.
431.32 Preemption of State regulations.

CERTIFICATION

431.35 Applicability of certification requirements.
431.36 Compliance Certification.

APPENDIX A TO SUBPART B OF 10 CFR PART 431 [RESERVED]
APPENDIX B TO SUBPART B OF PART 431—UNIFORM TEST METHOD FOR MEASURING NOMINAL FULL LOAD EFFICIENCY OF ELECTRIC MOTORS
APPENDIX C TO SUBPART B OF PART 431—COMPLIANCE CERTIFICATION

Subpart C—Commercial Refrigerators, Freezers and Refrigerator-Freezers

431.61 Purpose and scope.
431.62 Definitions concerning commercial refrigerators, freezers and refrigerator-freezers.

TEST PROCEDURES

431.63 Materials incorporated by reference.
431.64 Uniform test method for the measurement of energy consumption of commercial refrigerators, freezers, and refrigerator-freezers.

ENERGY CONSERVATION STANDARDS

431.66 Energy conservation standards and their effective dates.

APPENDIX A TO SUBPART C OF PART 431—UNIFORM TEST METHOD FOR THE MEASUREMENT OF ENERGY CONSUMPTION OF COMMERCIAL REFRIGERATORS, FREEZERS, AND REFRIGERATOR-FREEZERS
APPENDIX B TO SUBPART C OF PART 431—AMENDED UNIFORM TEST METHOD FOR THE MEASUREMENT OF ENERGY CONSUMPTION OF COMMERCIAL REFRIGERATORS, FREEZERS, AND REFRIGERATOR-FREEZERS

Subpart D—Commercial Warm Air Furnaces

431.71 Purpose and scope.
431.72 Definitions concerning commercial warm air furnaces.

TEST PROCEDURES

431.75 Materials incorporated by reference.
431.76 Uniform test method for the measurement of energy efficiency of commercial warm air furnaces.

ENERGY CONSERVATION STANDARDS

431.77 Energy conservation standards and their effective dates.

Subpart E—Commercial Packaged Boilers

431.81 Purpose and scope.
431.82 Definitions concerning commercial packaged boilers.

TEST PROCEDURES

431.85 Materials incorporated by reference.
431.86 Uniform test method for the measurement of energy efficiency of commercial packaged boilers.

ENERGY CONSERVATION STANDARDS

431.87 Energy conservation standards and their effective dates.

Subpart F—Commercial Air Conditioners and Heat Pumps

431.91 Purpose and scope.
431.92 Definitions concerning commercial air conditioners and heat pumps.

TEST PROCEDURES

431.95 Materials incorporated by reference.
431.96 Uniform test method for the measurement of energy efficiency of commercial air conditioners and heat pumps.
431.97 Energy efficiency standards and their compliance dates.

APPENDIX A TO SUBPART F OF PART 431—UNIFORM TEST METHOD FOR THE MEASUREMENT OF ENERGY CONSUMPTION OF AIR-COOLED SMALL (≥65,000 BTU/H), LARGE, AND VERY LARGE COMMERCIAL PACKAGE AIR CONDITIONING AND HEATING EQUIPMENT

Subpart G—Commercial Water Heaters, Hot Water Supply Boilers and Unfired Hot Water Storage Tanks

431.101 Purpose and scope.

431.102 Definitions concerning commercial water heaters, hot water supply boilers, and unfired hot water storage tanks.
431.104 Sources for information and guidance.

TEST PROCEDURES

431.105 Materials incorporated by reference.
431.106 Uniform test method for the measurement of energy efficiency of commercial water heaters and hot water supply boilers (other than commercial heat pump water heaters).
431.107 Uniform test method for the measurement of energy efficiency of commercial heat pump water heaters.

ENERGY CONSERVATION STANDARDS

431.110 Energy conservation standards and their effective dates.

Subpart H—Automatic Commercial Ice Makers

431.131 Purpose and scope.
431.132 Definitions concerning automatic commercial ice makers.

TEST PROCEDURES

431.133 Materials incorporated by reference.
431.134 Uniform test methods for the measurement of energy and water consumption of automatic commercial ice makers.

ENERGY CONSERVATION STANDARDS

431.136 Energy conservation standards and their effective dates.

Subpart I—Commercial Clothes Washers

431.151 Purpose and scope.
431.152 Definitions concerning commercial clothes washers.

TEST PROCEDURES

431.154 Test procedures.

ENERGY CONSERVATION STANDARDS

431.156 Energy and water conservation standards and effective dates.

Subpart J [Reserved]

431.171–431.176 [Reserved]

Subpart K—Distribution Transformers

431.191 Purpose and scope.
431.192 Definitions.

TEST PROCEDURES

431.193 Test procedures for measuring energy consumption of distribution transformers.

ENERGY CONSERVATION STANDARDS

431.196 Energy conservation standards and their effective dates.

COMPLIANCE AND ENFORCEMENT

APPENDIX A TO SUBPART K OF PART 431—UNIFORM TEST METHOD FOR MEASURING THE ENERGY CONSUMPTION OF DISTRIBUTION TRANSFORMERS

Subpart L—Illuminated Exit Signs

431.201 Purpose and scope.
431.202 Definitions concerning illuminated exit signs.

TEST PROCEDURES

431.203 Materials incorporated by reference.
431.204 Uniform test method for the measurement of energy consumption of illuminated exit signs.

ENERGY CONSERVATION STANDARDS

431.206 Energy conservation standards and their effective dates.

Subpart M—Traffic Signal Modules and Pedestrian Modules

431.221 Purpose and scope.
431.222 Definitions concerning traffic signal modules and pedestrian modules.

TEST PROCEDURES

431.223 Materials incorporated by reference.
431.224 Uniform test method for the measurement of energy consumption for traffic signal modules and pedestrian modules.
431.226 Energy conservation standards and their effective dates.

Subpart N—Unit Heaters

431.241 Purpose and scope.
431.242 Definitions concerning unit heaters.

TEST PROCEDURES [RESERVED]

ENERGY CONSERVATION STANDARDS

431.246 Energy conservation standards and their effective dates.

Subpart O—Commercial Prerinse Spray Valves

431.261 Purpose and scope.
431.262 Definitions concerning commercial prerinse spray valves.

TEST PROCEDURES

431.263 Materials incorporated by reference.
431.264 Uniform test method for the measurement of flow rate for commercial prerinse spray valves.

ENERGY CONSERVATION STANDARDS

431.266 Energy conservation standards and their effective dates.

Subpart P—Mercury Vapor Lamp Ballasts

431.281 Purpose and scope.
431.282 Definitions concerning mercury vapor lamp ballasts.

TEST PROCEDURES [RESERVED]

ENERGY CONSERVATION STANDARDS

431.286 Energy conservation standards and their effective dates.

Subpart Q—Refrigerated Bottled or Canned Beverage Vending Machines

431.291 Scope.
431.292 Definitions concerning refrigerated bottled or canned beverage vending machines.

TEST PROCEDURES

431.293 Materials incorporated by reference.
431.294 Uniform test method for the measurement of energy consumption of refrigerated bottled or canned beverage vending machines.

ENERGY CONSERVATION STANDARDS

431.296 Energy conservation standards and their effective dates.

APPENDIX A TO SUBPART Q OF PART 431-UNIFORM TEST METHOD FOR THE MEASUREMENT OF ENERGY CONSUMPTION OF REFRIGERATED BOTTLED OR CANNED BEVERAGE VENDING MACHINES

APPENDIX B TO SUBPART Q OF PART 431-UNIFORM TEST METHOD FOR THE MEASUREMENT OF ENERGY CONSUMPTION OF REFRIGERATED BOTTLED OR CANNED BEVERAGE VENDING MACHINES

Subpart R—Walk-in Coolers and Walk-in Freezers

431.301 Purpose and scope.
431.302 Definitions concerning walk-in coolers and walk-in freezers.

TEST PROCEDURES

431.303 Materials incorporated by reference.
431.304 Uniform test method for the measurement of energy consumption of walk-in coolers and walk-in freezers.
431.305 [Reserved]

ENERGY CONSERVATION STANDARDS

431.306 Energy conservation standards and their effective dates.

APPENDIX A TO SUBPART R OF PART 431—UNIFORM TEST METHOD FOR THE MEASUREMENT OF ENERGY CONSUMPTION OF THE COMPONENTS OF ENVELOPES OF WALK-IN COOLERS AND WALK-IN FREEZERS

Subpart S—Metal Halide Lamp Ballasts and Fixtures

431.321 Purpose and scope.
431.322 Definitions concerning metal halide lamp ballasts and fixtures.

TEST PROCEDURES

431.323 Materials incorporated by reference.
431.324 Uniform test method for the measurement of energy efficiency and standby mode energy consumption of metal halide lamp ballasts.

ENERGY CONSERVATION STANDARDS

431.326 Energy conservation standards and their effective dates.

Subpart T [Reserved]

Subpart U—Enforcement for Electric Motors

431.381 Purpose and scope for electric motors.
431.382 Prohibited acts.
431.383 Enforcement process for electric motors.
431.384 [Reserved]
431.385 Cessation of distribution of a basic model of an electric motor.
431.386 Remedies.
431.387 Hearings and appeals.

APPENDIX A TO SUBPART U OF PART 431—SAMPLING PLAN FOR ENFORCEMENT TESTING OF ELECTRIC MOTORS

Subpart V—General Provisions

431.401 Petitions for waiver and interim waiver.
431.402 Preemption of State regulations for commercial HVAC & WH products.
431.403 Maintenance of records for electric motors.
431.404 Imported electric motors.
431.405 Exported electric motors.
431.406 Subpoena—Electric Motors.
431.407 Confidentiality—Electric Motors.
431.408 Preemption of State regulations for covered equipment other than electric motors and commercial heating, ventilating, air-conditioning and water heating products.

Subpart W—Petitions To Exempt State Regulation From Preemption; Petitions To Withdraw Exemption of State Regulation

431.421 Purpose and scope.
431.422 Prescriptions of a rule.
431.423 Filing requirements.
431.424 Notice of petition.
431.425 Consolidation.
431.426 Hearing.

431.427 Disposition of petitions.
431.428 Effective dates of final rules.
431.429 Request for reconsideration.
431.430 Finality of decision.

Subpart X—Small Electric Motors

431.441 Purpose and scope.
431.442 Definitions.

TEST PROCEDURES

431.443 Materials incorporated by reference.
431.444 Test procedures for the measurement of energy efficiency.
431.445 Determination of small electric motor energy efficiency.

ENERGY CONSERVATION STANDARDS

431.446 Small electric motors energy conservation standards and their effective dates.
431.447 Department of Energy recognition of nationally recognized certification programs.
431.448 Procedures for recognition and withdrawal of recognition of certification programs.

AUTHORITY: 42 U.S.C. 6291–6317.

SOURCE: 64 FR 54141, Oct. 5, 1999, unless otherwise noted.

Subpart A—General Provisions

§ 431.1 Purpose and scope.

This part establishes the regulations for the implementation of provisions relating to commercial and industrial equipment in Part B of Title III of the Energy Policy and Conservation Act (42 U.S.C. 6291–6309) and in Part C of Title III of the Energy Policy and Conservation Act (42 U.S.C. 6311–6317), which establishes an energy conservation program for certain commercial and industrial equipment.

[70 FR 60414, Oct. 18, 2005]

§ 431.2 Definitions.

The following definitions apply for purposes of this part. Any words or terms not defined in this Section or elsewhere in this part shall be defined as provided in Section 340 of the Act.

Act means the Energy Policy and Conservation Act of 1975, as amended, 42 U.S.C. 6291–6316.

Alternate efficiency determination method or AEDM means a method of calculating the efficiency of a commercial HVAC and WH product, in terms of the descriptor used in or under section 342(a) of the Act to state the energy conservation standard for that product.

Btu means British thermal unit, which is the quantity of heat required to raise the temperature of one pound of water by one degree Fahrenheit.

Commercial HVAC & WH product means any small, large, or very large commercial package air-conditioning and heating equipment, packaged terminal air conditioner, packaged terminal heat pump, single package vertical air conditioner, single package vertical heat pump, computer room air conditioner, variable refrigerant flow multi-split air conditioner, variable refrigerant flow multi-split heat pump, commercial packaged boiler, hot water supply boiler, commercial warm air furnace, instantaneous water heater, storage water heater, or unfired hot water storage tank.

Covered equipment means any electric motor, as defined in § 431.12; commercial heating, ventilating, and air conditioning, and water heating product (HVAC & WH product), as defined in § 431.172; commercial refrigerator, freezer, or refrigerator-freezer, as defined in § 431.62; automatic commercial ice maker, as defined in § 431.132; commercial clothes washer, as defined in § 431.152; distribution transformer, as defined in § 431.192; illuminated exit sign, as defined in § 431.202; traffic signal module or pedestrian module, as defined in § 431.222; unit heater, as defined in § 431.242; commercial prerinse spray valve, as defined in § 431.262; mercury vapor lamp ballast, as defined in § 431.282; refrigerated bottled or canned beverage vending machine, as defined in § 431.292; walk-in cooler and walk-in freezer, as defined in § 431.302; metal halide ballast and metal halide lamp fixture, as defined in § 431.322.

DOE or *the Department* means the U.S. Department of Energy.

Energy conservation standard means any standards meeting the definitions of that term in 42 U.S.C. 6291(6) and 42 U.S.C. 6311(18) as well as any other water conservation standards and design requirements found in this part or parts 430 or 431.

EPCA means the Energy Policy and Conservation Act, as amended, 42 U.S.C. 6291–6316.

Flue loss means the sum of the sensible heat and latent heat above room temperature of the flue gases leaving the appliance.

Gas means propane or natural gas as defined by the Federal Power Commission.

Import means to import into the customs territory of the United States.

Independent laboratory means a laboratory or test facility not controlled by, affiliated with, having financial ties with, or under common control with the manufacturer or distributor of the covered equipment being evaluated.

Industrial equipment means an article of equipment, regardless of whether it is in fact distributed in commerce for industrial or commercial use, of a type which:

(1) In operation consumes, or is designed to consume energy;

(2) To any significant extent, is distributed in commerce for industrial or commercial use; and

(3) Is not a ''covered product'' as defined in Section 321(2) of EPCA, 42 U.S.C. 6291(2), other than a component of a covered product with respect to which there is in effect a determination under Section 341(c) of EPCA, 42 U.S.C. 6312(c).

ISO means International Organization for Standardization.

Manufacture means to manufacture, produce, assemble, or import.

Manufacturer means any person who manufactures industrial equipment, including any manufacturer of a commercial packaged boiler.

Manufacturer's model number means the identifier used by a manufacturer to uniquely identify the group of identical or essentially identical commercial equipment to which a particular unit belongs. The manufacturer's model number typically appears on equipment nameplates, in equipment catalogs and in other product advertising literature.

Private labeler means, with respect to any product covered under this part, an owner of a brand or trademark on the label of a covered product which bears a private label. A covered product bears a private label if:

(1) Such product (or its container) is labeled with the brand or trademark of a person other than a manufacturer of such product;

(2) The person with whose brand or trademark such product (or container) is labeled has authorized or caused such product to be so labeled; and

(3) The brand or trademark of a manufacturer of such product does not appear on such label.

Secretary means the Secretary of Energy.

State means a State, the District of Columbia, Puerto Rico, or any territory or possession of the United States.

State regulation means a law or regulation of a State or political subdivision thereof.

[69 FR 61923, Oct. 21, 2004, as amended at 71 FR 71369, Dec. 8, 2006; 74 FR 12071, Mar. 23, 2009; 75 FR 666, Jan. 5, 2010; 76 FR 12503, Mar. 7, 2011; 77 FR 28987, May 16, 2012; 79 FR 26601, May 9, 2014]

Subpart B—Electric Motors

SOURCE: 69 FR 61923, Oct. 21, 2004, unless otherwise noted.

§ 431.11 Purpose and scope.

This subpart contains energy conservation requirements for electric motors. It contains test procedures that EPCA requires DOE to prescribe, related requirements, energy conservation standards prescribed by EPCA, labeling rules, and compliance procedures. It also identifies materials incorporated by reference in this part. This subpart does not cover ''small electric motors,'' which are addressed in subpart X of this part.

[77 FR 26633, May 4, 2012]

§ 431.12 Definitions.

The following definitions apply for purposes of this subpart, and of subparts U and V of this part. Any words or terms not defined in this Section or elsewhere in this part shall be defined as provided in Section 340 of the Act.

Accreditation means recognition by an accreditation body that a laboratory is competent to test the efficiency of electric motors according to the scope and procedures given in Test Method B of IEEE Std 112–2004 and CSA C390–10 (incorporated by reference, see § 431.15).

Accreditation body means an organization or entity that conducts and administers an accreditation system and grants accreditation.

Accreditation system means a set of requirements to be fulfilled by a testing laboratory, as well as rules of procedure and management, that are used to accredit laboratories.

Accredited laboratory means a testing laboratory to which accreditation has been granted.

Air-over electric motor means an electric motor rated to operate in and be cooled by the airstream of a fan or blower that is not supplied with the motor and whose primary purpose is providing airflow to an application other than the motor driving it.

Alternative efficiency determination method or *AEDM* means, with respect to an electric motor, a method of calculating the total power loss and average full load efficiency.

Average full load efficiency means the arithmetic mean of the full load efficiencies of a population of electric motors of duplicate design, where the full load efficiency of each motor in the population is the ratio (expressed as a percentage) of the motor's useful power output to its total power input when the motor is operated at its full rated load, rated voltage, and rated frequency.

Basic model means, with respect to an electric motor, all units of a given type of electric motor (or class thereof) manufactured by a single manufacturer, and which have the same rating, have electrical characteristics that are essentially identical, and do not have any differing physical or functional characteristics which affect energy consumption or efficiency. For the purpose of this definition, ''rating'' means one of the 113 combinations of an electric motor's horsepower (or standard kilowatt equivalent), number of poles, and open or enclosed construction, with respect to which § 431.25 prescribes nominal full load efficiency standards.

Brake electric motor means a motor that contains a dedicated mechanism for speed reduction, such as a brake, either within or external to the motor enclosure

Certificate of conformity means a document that is issued by a certification program, and that gives written assurance that an electric motor complies with the energy efficiency standard applicable to that motor, as specified in § 431.25.

Certification program means a certification system that determines conformity by electric motors with the energy efficiency standards prescribed by and pursuant to the Act.

Certification system means a system, that has its own rules of procedure and management, for giving written assurance that a product, process, or service conforms to a specific standard or other specified requirements, and that is operated by an entity independent of both the party seeking the written assurance and the party providing the product, process or service.

Component set means a combination of motor parts that require the addition of more than two endshields (and their associated bearings) to create an operable motor. These parts may consist of any combination of a stator frame, wound stator, rotor, shaft, or endshields. For the purpose of this definition, the term ''operable motor'' means an electric motor engineered for performing in accordance with nameplate ratings.

CSA means Canadian Standards Association.

Definite purpose motor means any motor that cannot be used in most general purpose applications and is designed either:

(1) To standard ratings with standard operating characteristics or standard mechanical construction for use under service conditions other than usual, such as those specified in NEMA MG1–2009, paragraph 14.3, ''Unusual Service Conditions,'' (incorporated by reference, see § 431.15); or

(2) For use on a particular type of application.

Definite purpose electric motor means any electric motor that cannot be used in most general purpose applications and is designed either:

(1) To standard ratings with standard operating characteristics or standard mechanical construction for use under service conditions other than usual, such as those specified in NEMA MG1–2009, paragraph 14.3, ''Unusual Service

Conditions,'' (incorporated by reference, see § 431.15); or

(2) For use on a particular type of application.

Electric motor means a machine that converts electrical power into rotational mechanical power.

Electric motor with encapsulated windings means an electric motor capable of passing the conformance test for water resistance described in NEMA MG 1–2009, paragraph 12.62 (incorporated by reference, see § 431.15).

Electric motor with moisture resistant windings means an electric motor that is capable of passing the conformance test for moisture resistance generally described in NEMA MG 1–2009, paragraph 12.63 (incorporated by reference, see § 431.15).

Electric motor with sealed windings means an electric motor capable of passing the conformance test for water resistance described in NEMA MG 1–2009, paragraph 12.62 (incorporated by reference, see § 431.15).

Enclosed motor means an electric motor so constructed as to prevent the free exchange of air between the inside and outside of the case but not sufficiently enclosed to be termed airtight.

Fire pump electric motor means an electric motor, including any IEC-equivalent, that meets the requirements of section 9.5 of NFPA 20 (incorporated by reference, see § 431.15).

General purpose electric motor means any electric motor that is designed in standard ratings with either:

(1) Standard operating characteristics and mechanical construction for use under usual service conditions, such as those specified in NEMA MG1–2009, paragraph 14.2, ''Usual Service Conditions,'' (incorporated by reference, see § 431.15) and without restriction to a particular application or type of application; or

(2) Standard operating characteristics or standard mechanical construction for use under unusual service conditions, such as those specified in NEMA MG1–2009, paragraph 14.3, ''Unusual Service Conditions,'' (incorporated by reference, see § 431.15) or for a particular type of application, and which can be used in most general purpose applications.

General purpose electric motor (subtype I) means a general purpose electric motor that:

(1) Is a single-speed, induction motor;

(2) Is rated for continuous duty (MG1) operation or for duty type S1 (IEC);

(3) Contains a squirrel-cage (MG1) or cage (IEC) rotor;

(4) Has foot-mounting that may include foot-mounting with flanges or detachable feet;

(5) Is built in accordance with NEMA T-frame dimensions or their IEC metric equivalents, including a frame size that is between two consecutive NEMA frame sizes or their IEC metric equivalents;

(6) Has performance in accordance with NEMA Design A (MG1) or B (MG1) characteristics or equivalent designs such as IEC Design N (IEC);

(7) Operates on polyphase alternating current 60-hertz sinusoidal power, and:

(i) Is rated at 230 or 460 volts (or both) including motors rated at multiple voltages that include 230 or 460 volts (or both), or

(ii) Can be operated on 230 or 460 volts (or both); and

(8) Includes, but is not limited to, explosion-proof construction.

NOTE TO DEFINITION OF GENERAL PURPOSE ELECTRIC MOTOR (SUBTYPE I): References to ''MG1'' above refer to NEMA Standards Publication MG1–2009 (incorporated by reference in § 431.15). References to ''IEC'' above refer to IEC 60034–1, 60034–12, 60050–411, and 60072–1 (incorporated by reference in § 431.15), as applicable.

General purpose electric motor (subtype II) means any general purpose electric motor that incorporates design elements of a general purpose electric motor (subtype I) but, unlike a general purpose electric motor (subtype I), is configured in one or more of the following ways:

(1) Is built in accordance with NEMA U-frame dimensions as described in NEMA MG1–1967 (incorporated by reference, see § 431.15) or in accordance with the IEC metric equivalents, including a frame size that is between two consecutive NEMA frame sizes or their IEC metric equivalents;

(2) Has performance in accordance with NEMA Design C characteristics as described in MG1 or an equivalent IEC design(s) such as IEC Design H;

(3) Is a close-coupled pump motor;

(4) Is a footless motor;

(5) Is a vertical solid shaft normal thrust motor (as tested in a horizontal configuration) built and designed in a manner consistent with MG1;

(6) Is an eight-pole motor (900 rpm); or

(7) Is a polyphase motor with a voltage rating of not more than 600 volts, is not rated at 230 or 460 volts (or both), and cannot be operated on 230 or 460 volts (or both).

NOTE TO DEFINITION OF GENERAL PURPOSE ELECTRIC MOTOR (SUBTYPE II): With the exception of the NEMA Motor Standards MG1–1967 (incorporated by reference in § 431.15), references to ''MG1'' above refer to the 2009 NEMA MG1–2009 (incorporated by reference in § 431.15). References to ''IEC'' above refer to IEC 60034–1, 60034–12, 60050–411, and 60072–1 (incorporated by reference in § 431.15), as applicable.

IEC means the International Electrotechnical Commission.

IEC Design H motor means an electric motor that

(1) Is an induction motor designed for use with three-phase power;

(2) Contains a cage rotor;

(3) Is capable of direct-on-line starting

(4) Has 4, 6, or 8 poles;

(5) Is rated from 0.4 kW to 1600 kW at a frequency of 60 Hz; and

(6) Conforms to sections 8.1, 8.2, and 8.3 of the IEC 60034–12 edition 2.1 (incorporated by reference, see § 431.15) requirements for starting torque, locked rotor apparent power, and starting.

IEC Design N motor means an electric motor that:

(1) Is an induction motor designed for use with three-phase power;

(2) Contains a cage rotor;

(3) Is capable of direct-on-line starting;

(4) Has 2, 4, 6, or 8 poles;

(5) Is rated from 0.4 kW to 1600 kW at a frequency of 60 Hz; and

(6) Conforms to sections 6.1, 6.2, and 6.3 of the IEC 60034–12 edition 2.1 (incorporated by reference, see § 431.15) requirements for torque characteristics, locked rotor apparent power, and starting.

IEEE means the Institute of Electrical and Electronics Engineers, Inc.

Immersible electric motor means an electric motor primarily designed to operate continuously in free-air, but is also capable of temporarily withstanding complete immersion in liquid for a continuous period of no less than 30 minutes.

Inverter-capable electric motor means an electric motor designed to be directly connected to polyphase, sinusoidal line power, but that is also capable of continuous operation on an inverter drive over a limited speed range and associated load.

Inverter-only electric motor means an electric motor that is capable of rated operation solely with an inverter, and is not intended for operation when directly connected to polyphase, sinusoidal line power.

Liquid-cooled electric motor means a motor that is cooled by liquid circulated using a designated cooling apparatus such that the liquid or liquid-filled conductors come into direct contact with the parts of the motor.

NEMA means the National Electrical Manufacturers Association.

NEMA Design A motor means a squirrel-cage motor that:

(1) Is designed to withstand full-voltage starting and developing locked-rotor torque as shown in NEMA MG 1–2009, paragraph 12.38.1 (incorporated by reference, see § 431.15);

(2) Has pull-up torque not less than the values shown in NEMA MG 1–2009, paragraph 12.40.1;

(3) Has breakdown torque not less than the values shown in NEMA MG 1–2009, paragraph 12.39.1;

(4) Has a locked-rotor current higher than the values shown in NEMA MG 1–2009, paragraph 12.35.1 for 60 hertz and NEMA MG 1–2009, paragraph 12.35.2 for 50 hertz; and

(5) Has a slip at rated load of less than 5 percent for motors with fewer than 10 poles.

NEMA Design B motor means a squirrel-cage motor that is:

(1) Designed to withstand full-voltage starting;

(2) Develops locked-rotor, breakdown, and pull-up torques adequate for general application as specified in sections 12.38, 12.39 and 12.40 of NEMA MG1–2009 (incorporated by reference, see § 431.15);

(3) Draws locked-rotor current not to exceed the values shown in section

12.35.1 for 60 hertz and 12.35.2 for 50 hertz of NEMA MG1–2009; and

(4) Has a slip at rated load of less than 5 percent for motors with fewer than 10 poles.

NEMA Design C motor means a squirrel-cage motor that:

(1) Is Designed to withstand full-voltage starting and developing locked-rotor torque for high-torque applications up to the values shown in NEMA MG1–2009, paragraph 12.38.2 (incorporated by reference, see § 431.15);

(2) Has pull-up torque not less than the values shown in NEMA MG1–2009, paragraph 12.40.2;

(3) Has breakdown torque not less than the values shown in NEMA MG1–2009, paragraph 12.39.2;

(4) Has a locked-rotor current not to exceed the values shown in NEMA MG1–2009, paragraphs 12.35.1 for 60 hertz and 12.35.2 for 50 hertz; and

(5) Has a slip at rated load of less than 5 percent.

Nominal full-load efficiency means, with respect to an electric motor, a representative value of efficiency selected from the ''nominal efficiency'' column of Table 12–10, NEMA MG1–2009, (incorporated by reference, see § 431.15), that is not greater than the average full-load efficiency of a population of motors of the same design.

Open motor means an electric motor having ventilating openings which permit passage of external cooling air over and around the windings of the machine.

Partial electric motor means an assembly of motor components necessitating the addition of no more than two endshields, including bearings, to create an electric motor capable of operation in accordance with the applicable nameplate ratings.

Special purpose motor means any motor, other than a general purpose motor or definite purpose motor, which has special operating characteristics or special mechanical construction, or both, designed for a particular application.

Special purpose electric motor means any electric motor, other than a general purpose motor or definite electric purpose motor, which has special operating characteristics or special mechanical construction, or both, designed for a particular application.

Submersible electric motor means an electric motor that:

(1) Is intended to operate continuously only while submerged in liquid;

(2) Is capable of operation while submerged in liquid for an indefinite period of time; and

(3) Has been sealed to prevent ingress of liquid from contacting the motor's internal parts.

Total power loss means that portion of the energy used by an electric motor not converted to rotational mechanical power, expressed in percent.

Totally enclosed non-ventilated (TENV) electric motor means an electric motor that is built in a frame-surface cooled, totally enclosed configuration that is designed and equipped to be cooled only by free convection.

[69 FR 61923, Oct. 21, 2004, as amended at 74 FR 12071, Mar. 23, 2009; 77 FR 26633, May 4, 2012; 78 FR 75993, Dec. 13, 2013; 79 FR 31009, May 29, 2014]

TEST PROCEDURES, MATERIALS INCORPORATED AND METHODS OF DETERMINING EFFICIENCY

§ 431.14 Sources for information and guidance.

(a) *General*. The standards listed in this paragraph are referred to in the DOE procedures for testing laboratories, and recognition of accreditation bodies and certification programs but are not incorporated by reference. These sources are given here for information and guidance.

(b) *NVLAP*. National Voluntary Laboratory Accreditation Program, National Institute of Standards and Technology, 100 Bureau Drive, M/S 2140, Gaithersburg, MD 20899–2140, 301–975–4016, or go to *http://www.nist.gov/nvlap/*. Also see *http://www.nist.gov/nvlap/nvlap-handbooks.cfm*.

(1) NVLAP Handbook 150, Procedures and General Requirements, February 2006.

(2) NVLAP Handbook 150–10, Efficiency of Electric Motors, February 2007.

(3) NIST Handbook 150–10 Checklist, Efficiency of Electric Motors Program, (2007–05–04).

(4) NVLAP Lab Bulletin Number: LB–42–2009, Changes to NVLAP Efficiency of Electric Motors Program, March 19, 2009.

(c) *ISO/IEC*. International Organization for Standardization (ISO), 1, ch. de la Voie-Creuse, CP 56, CH– 1211 Geneva 20, Switzerland/International Electrotechnical Commission, 3, rue de Varembé, P.O. Box 131, CH–1211 Geneva 20, Switzerland.

(1) ISO/IEC Guide 25, General requirements for the competence of calibration and testing laboratories, 1990.

(2) ISO Guide 27, Guidelines for corrective action to be taken by a certification body in the event of either misapplication of its mark of conformity to a product, or products which bear the mark of the certification body being found to subject persons or property to risk, 1983.

(3) ISO/IEC Guide 28, General rules for a model third-party certification system for products, 2004.

(4) ISO/IEC Guide 58, Calibration and testing laboratory accreditation systems—General requirements for operation and recognition, 1993.

(5) ISO/IEC Guide 65, General requirements for bodies operating product certification systems, 1996.

[77 FR 26634, May 4, 2012]

§ 431.15 Materials incorporated by reference.

(a) *General*. The Department of Energy incorporates by reference the following standards and test procedures into subpart B of part 431. The Director of the Federal Register has approved the material listed for incorporation by reference in accordance with 5 U.S.C. 552(a) and 1 CFR part 51. Any subsequent amendment to a standard by the standard-setting organization will not affect DOE regulations unless and until DOE amends its test procedures. Material is incorporated as it exists on the date of the approval, and a notice of any change in the material will be published in the FEDERAL REGISTER. All approved material is available for inspection at the U.S. Department of Energy, Office of Energy Efficiency and Renewable Energy, Building Technologies Program, Sixth Floor, 950 L'Enfant Plaza SW., Washington, DC 20024, (202) 586–2945, or go to *http://www1.eere.energy.gov/buildings/appliance_standards/*. Also, this material is available for inspection at the National Archives and Records Administration (NARA). For information on the availability of this material at NARA, call 202–741–6030, or go to: *http://www.archives.gov/federal_register/code_of_federal_regulations/ibr_locations.html*.

(b) *CSA*. Canadian Standards Association, Sales Department, 5060 Spectrum Way, Suite 100, Mississauga, Ontario, L4W 5N6, Canada, 1–800–463–6727, or go to *http://www.shopcsa.ca/onlinestore/welcome.asp*.

(1) CSA C390–10, Test methods, marking requirements, and energy efficiency levels for three-phase induction motors, March 2010, IBR approved for §§ 431.12; 431.19; 431.20; appendix B to subpart B of part 431.

(2) [Reserved]

(c) *IEC*. International Electrotechnical Commission Central Office, 3, rue de Varembé, P.O. Box 131, CH–1211 GENEVA 20, Switzerland, + 41 22 919 02 11, or go to *http://webstore.iec.ch*.

(1) IEC 60034–1 Edition 12.0 2010–02, (''IEC 60034–1''), Rotating Electrical Machines, Part 1: Rating and Performance, February 2010, IBR approved as follows: section 4: Duty, clause 4.2.1 and Figure 1, IBR approved for § 431.12.

(2) IEC 60034–12 Edition 2.1 2007–09, (''IEC 60034–12''), Rotating Electrical Machines, Part 12: Starting Performance of Single-Speed Three-Phase Cage Induction Motors, September 2007, IBR approved as follows: clauses 5.2, 5.4, 6, and 8, and Tables 1, 2, 3, 4, 5, 6, and 7, IBR approved for § 431.12.

(3) IEC 60050–411, International Electrotechnical Vocabulary Chapter 411: Rotating machines, 1996, IBR approved as follows: sections 411–33–07 and 411–37–26, IBR approved for § 431.12.

(4) IEC 60072–1, Dimensions and Output Series for Rotating Electrical Machines—Part 1: Frame numbers 56 to 400 and flange numbers 55 to 1080, 1991, IBR approved as follows: clauses 2, 3, 4.1, 6.1, 7, and 10, and Tables 1, 2 and 4, IBR approved for § 431.12.

(d) *IEEE*. Institute of Electrical and Electronics Engineers, Inc., 445 Hoes Lane, P.O. Box 1331, Piscataway, NJ 08855–1331, 1–800–678–IEEE (4333), or

http://www.ieee.org/web/publications/home/index.html.

(1) IEEE Std 112–2004, Test Procedure for Polyphase Induction Motors and Generators, approved February 9, 2004, IBR approved as follows: section 6.4, Efficiency Test Method B, Input-Output with Loss Segregation, IBR approved for §§ 431.12; 431.19; 431.20; appendix B to subpart B of part 431.

(2) [Reserved]

(e) *NEMA*. National Electrical Manufacturers Association, 1300 North 17th Street, Suite 1752, Rosslyn, Virginia 22209, 703–841–3200, or go to *http://www.nema.org/*.

(1) NEMA Standards Publication MG1–2009 (''NEMA MG1–2009''), Motors and Generators, copyright 2009, IBR approved as follows:

(i) Section I, General Standards Applying to All Machines, Part 1, Referenced Standards and Definitions, paragraphs 1.18.1, 1.18.1.1, 1.19.1.1, 1.19.1.2, 1.19.1.3, and 1.40.1, IBR approved for § 431.12;

(ii) Section I, General Standards Applying to All Machines, Part 4, Dimensions, Tolerances, and Mounting, paragraphs 4.1, 4.2.1, 4.2.2, 4.4.1, 4.4.2, 4.4.4, 4.4.5, and 4.4.6, Figures 4–1, 4–2, 4–3, 4–4, and 4–5, and Table 4–2, IBR approved for § 431.12;

(iii) Section II, Small (Fractional) and Medium (Integral) Machines, Part 12, Tests and Performance—AC and DC Motors:

(A) Paragraphs 12.35.1, 12.35.2, 12.38.1, 12.38.2, 12.39.1, 12.39.2, and 12.40.1, 12.40.2, and Tables 12–2, 12–3, and 12–10, IBR approved for § 431.12;

(B) Paragraph 12.58.1, IBR approved for § 431.12 and appendix B to subpart B of part 431;

(C) Paragraph 12.58.2, IBR approved for § 431.31.

(D) Paragraphs 12.62 and 12.63, IBR approved for § 431.12.

(iv) Section II, Small (Fractional) and Medium (Integral) Machines, Part 14, Application Data—AC and DC Small and Medium Machines, paragraphs 14.2 and 14.3, IBR approved for § 431.12.

(2) NEMA Standards Publication MG1–1967, (''NEMA MG1–1967''), Motors and Generators, January 1968, IBR approved as follows:

(i) Part 11, Dimensions, IBR approved for § 431.12;

(ii) Part 13, Frame Assignments—A–C Integral-Horsepower Motors, IBR approved for § 431.12.

(f) *NFPA*. National Fire Protection Association, 1 Batterymarch Park, Quincy, MA 02169–7471, 617–770–3000, or go to *http://nfpa.org/*.

(1) NFPA 20, 2010 Edition, Standard for the Installation of Stationary Pumps for Fire Protection, section 9.5, IBR approved for § 431.12.

(2) (Reserved)

[77 FR 26634, May 4, 2012, as amended at 78 FR 75994, Dec. 13, 2013]

§ 431.16 Test procedures for the measurement of energy efficiency.

For purposes of 10 CFR part 431 and EPCA, the test procedures for measuring the energy efficiency of an electric motor shall be the test procedures specified in appendix B to this subpart B.

§ 431.17 Determination of efficiency.

When a party determines the energy efficiency of an electric motor in order to comply with an obligation imposed on it by or pursuant to Part C of Title III of EPCA, 42 U.S.C. 6311–6316, this Section applies. This section does not apply to enforcement testing conducted pursuant to § 431.192.

(a) *Provisions applicable to all electric motors*—(1) *General requirements*. The average full load efficiency of each basic model of electric motor must be determined either by testing in accordance with § 431.16 of this subpart, or by application of an alternative efficiency determination method (AEDM) that meets the requirements of paragraphs (a)(2) and (3) of this section, provided, however, that an AEDM may be used to determine the average full load efficiency of one or more of a manufacturer's basic models only if the average full load efficiency of at least five of its other basic models is determined through testing.

(2) *Alternative efficiency determination method*. An AEDM applied to a basic model must be:

(i) Derived from a mathematical model that represents the mechanical and electrical characteristics of that basic model, and

(ii) Based on engineering or statistical analysis, computer simulation or

modeling, or other analytic evaluation of performance data.

(3) *Substantiation of an alternative efficiency determination method.* Before an AEDM is used, its accuracy and reliability must be substantiated as follows:

(i) The AEDM must be applied to at least five basic models that have been tested in accordance with § 431.16, and

(ii) The predicted total power loss for each such basic model, calculated by applying the AEDM, must be within plus or minus ten percent of the mean total power loss determined from the testing of that basic model.

(4) *Subsequent verification of an AEDM.* (i) Each manufacturer shall periodically select basic models representative of those to which it has applied an AEDM, and for each basic model selected shall either:

(A) Subject a sample of units to testing in accordance with §§ 431.16 and 431.17(b)(2) by an accredited laboratory that meets the requirements of § 431.18;

(B) Have a certification body recognized under § 431.20 certify its nominal full load efficiency; or

(C) Have an independent state-registered professional engineer, who is qualified to perform an evaluation of electric motor efficiency in a highly competent manner and who is not an employee of the manufacturer, review the manufacturer's representations and certify that the results of the AEDM accurately represent the total power loss and nominal full load efficiency of the basic model.

(ii) Each manufacturer that has used an AEDM under this section shall have available for inspection by the Department of Energy records showing: the method or methods used; the mathematical model, the engineering or statistical analysis, computer simulation or modeling, and other analytic evaluation of performance data on which the AEDM is based; complete test data, product information, and related information that the manufacturer has generated or acquired pursuant to paragraphs (a)(3) and (a)(4)(i) of this section; and the calculations used to determine the average full load efficiency and total power losses of each basic model to which the AEDM was applied.

(iii) If requested by the Department, the manufacturer shall conduct simulations to predict the performance of particular basic models of electric motors specified by the Department, analyses of previous simulations conducted by the manufacturer, sample testing of basic models selected by the Department, or a combination of the foregoing.

(5) *Use of a certification program or accredited laboratory.* (i) A manufacturer may have a certification program, that DOE has classified as nationally recognized under § 431.20, certify the nominal full load efficiency of a basic model of electric motor, and issue a certificate of conformity for the motor.

(ii) For each basic model for which a certification program is not used as described in paragraph (a)(5)(i) of this section, any testing of the motor pursuant to paragraphs (a)(1) through (3) of this section to determine its energy efficiency must be carried out in accordance with paragraph (b) of this section, in an accredited laboratory that meets the requirements of § 431.18. (This includes testing of the basic model, pursuant to paragraph (a)(3)(i) of this section, to substantiate an AEDM.)

(b) *Additional testing requirements applicable when a certification program is not used*—(1) *Selection of basic models for testing.* (i) Basic models must be selected for testing in accordance with the following criteria:

(A) Two of the basic models must be among the five basic models with the highest unit volumes of production by the manufacturer in the prior year, or during the prior 12 calendar month period beginning in 1997,[1] whichever is later;

(B) The basic models should be of different horsepowers without duplication;

(C) The basic models should be of different frame number series without duplication; and

(D) Each basic model should be expected to have the lowest nominal full load efficiency among the basic models with the same rating (''rating'' as used

[1] In identifying these five basic models, any electric motor that does not comply with § 431.25 shall be excluded from consideration.

here has the same meaning as it has in the definition of ''basic model'').

(ii) In any instance where it is impossible for a manufacturer to select basic models for testing in accordance with all of these criteria, the criteria shall be given priority in the order in which they are listed. Within the limits imposed by the criteria, basic models shall be selected randomly.

(2) *Selection of units for testing.* For each basic model selected for testing,[2] a sample of units shall be selected at random and tested. The sample shall be comprised of production units of the basic model, or units that are representative of such production units. The sample size shall be not fewer than five units, except that when fewer than five units of a basic model would be produced over a reasonable period of time (approximately 180 days), then each unit shall be tested. In a test of compliance with a represented average or nominal efficiency:

(i) The average full-load efficiency of the sample $\overline{X}$ which is defined by

$$\overline{X} = \frac{1}{n}\sum_{i=1}^{n} X_i,$$

where X_i is the measured full-load efficiency of unit *i* and n is the number of units tested, shall satisfy the condition:

$$\overline{X} \geq \frac{100}{1 + 1.05\left(\frac{100}{RE} - 1\right)}$$

where RE is the represented nominal full-load efficiency, and

(ii) The lowest full-load efficiency in the sample X_{min}, which is defined by

$$X_{min} = \min\left(X_i\right)$$

shall satisfy the condition

$$\overline{X}_{min} \geq \frac{100}{1 + 1.15\left(\frac{100}{RE} - 1\right)}$$

[2] Components of similar design may be substituted without requiring additional testing if the represented measures of energy consumption continue to satisfy the applicable sampling provision.

(3) *Substantiation of an alternative efficiency determination method.* The basic models tested under § 431.17(a)(3)(i) must be selected for testing in accordance with paragraph (b)(1) of this section, and units of each such basic model must be tested in accordance with paragraph (b)(2) of this section by an accredited laboratory that meets the requirements of § 431.18.

§ 431.18 Testing laboratories.

(a) Testing pursuant to § 431.17(a)(5)(ii) must be conducted in an accredited laboratory for which the accreditation body was:

(1) The National Institute of Standards and Technology/National Voluntary Laboratory Accreditation Program (NIST/NVLAP); or

(2) A laboratory accreditation body having a mutual recognition arrangement with NIST/NVLAP; or

(3) An organization classified by the Department, pursuant to § 431.19, as an accreditation body.

(b) NIST/NVLAP is under the auspices of the National Institute of Standards and Technology (NIST)/National Voluntary Laboratory Accreditation Program (NVLAP), which is part of the U.S. Department of Commerce. NIST/NVLAP accreditation is granted on the basis of conformance with criteria published in 15 CFR Part 285. The National Voluntary Laboratory Accreditation Program, ''Procedures and General Requirements,'' NIST Handbook 150–10, February 2007, and Lab Bulletin LB–42–2009, Efficiency of Electric Motors Program, (referenced for guidance only, see § 431.14) present the technical requirements of NVLAP for the Efficiency of Electric Motors field of accreditation. This handbook supplements NIST Handbook 150, National Voluntary Laboratory Accreditation Program ''Procedures and General Requirements,'' which contains 15 CFR part 285 plus all general NIST/NVLAP procedures, criteria, and policies. Information regarding NIST/NVLAP and its Efficiency of Electric Motors Program (EEM) can be

obtained from NIST/NVLAP, 100 Bureau Drive, Mail Stop 2140, Gaithersburg, MD 20899–2140, (301) 975–4016 (telephone), or (301) 926–2884 (fax).

[69 FR 61923, Oct. 21, 2004, as amended at 77 FR 26635, May 4, 2012]

§ 431.19 Department of Energy recognition of accreditation bodies.

(a) *Petition.* To be classified by the Department of Energy as an accreditation body, an organization must submit a petition to the Department requesting such classification, in accordance with paragraph (c) of this section and § 431.21. The petition must demonstrate that the organization meets the criteria in paragraph (b) of this section.

(b) *Evaluation criteria.* To be classified as an accreditation body by the Department, the organization must meet the following criteria:

(1) It must have satisfactory standards and procedures for conducting and administering an accreditation system and for granting accreditation. This must include provisions for periodic audits to verify that the laboratories receiving its accreditation continue to conform to the criteria by which they were initially accredited, and for withdrawal of accreditation where such conformance does not occur, including failure to provide accurate test results.

(2) It must be independent of electric motor manufacturers, importers, distributors, private labelers or vendors. It cannot be affiliated with, have financial ties with, be controlled by, or be under common control with any such entity.

(3) It must be qualified to perform the accrediting function in a highly competent manner.

(4) It must be expert in the content and application of the test procedures and methodologies in IEEE Std 112–2004 Test Method B or CSA C390–10, (incorporated by reference, see § 431.15).

(c) *Petition format.* Each petition requesting classification as an accreditation body must contain a narrative statement as to why the organization meets the criteria set forth in paragraph (b) of this section, must be signed on behalf of the organization by an authorized representative, and must be accompanied by documentation that supports the narrative statement. The following provides additional guidance:

(1) *Standards and procedures.* A copy of the organization's standards and procedures for operating an accreditation system and for granting accreditation should accompany the petition.

(2) *Independent status.* The petitioning organization should identify and describe any relationship, direct or indirect, that it has with an electric motor manufacturer, importer, distributor, private labeler, vendor, trade association or other such entity, as well as any other relationship it believes might appear to create a conflict of interest for it in performing as an accreditation body for electric motor testing laboratories. It should explain why it believes such relationship(s) would not compromise its independence as an accreditation body.

(3) *Qualifications to do accrediting.* Experience in accrediting should be discussed and substantiated by supporting documents. Of particular relevance would be documentary evidence that establishes experience in the application of guidelines contained in the ISO/IEC Guide 58, *Calibration and testing laboratory accreditation systems—General requirements for operation and recognition,* as well as experience in overseeing compliance with the guidelines contained in the ISO/IEC Guide 25, *General Requirements for the Competence of Calibration and Testing Laboratories (referenced for guidance only, see § 431.14).*

(4) Expertise in electric motor test procedures. The petition should set forth the organization's experience with the test procedures and methodologies in IEEE Std 112–2004 Test Method B and CSA C390–10, (incorporated by reference, see § 431.15). This part of the petition should include items such as, but not limited to, a description of prior projects and qualifications of staff members. Of particular relevance would be documentary evidence that establishes experience in applying the guidelines contained in the ISO/IEC Guide 25, General Requirements for the Competence of Calibration and Testing Laboratories, (referenced for guidance only, see § 431.14) to energy efficiency testing for electric motors.

(d) *Disposition*. The Department will evaluate the petition in accordance with § 431.21, and will determine whether the applicant meets the criteria in paragraph (b) of this section to be classified as an accrediting body.

[69 FR 61923, Oct. 21, 2004, as amended at 77 FR 26635, May 4, 2012]

§ 431.20 Department of Energy recognition of nationally recognized certification programs.

(a) *Petition*. For a certification program to be classified by the Department of Energy as being nationally recognized in the United States for the purposes of Section 345(c) of EPCA (''nationally recognized''), the organization operating the program must submit a petition to the Department requesting such classification, in accordance with paragraph (c) of this Section and § 431.21. The petition must demonstrate that the program meets the criteria in paragraph (b) of this section.

(b) *Evaluation criteria*. For a certification program to be classified by the Department as nationally recognized, it must meet the following criteria:

(1) It must have satisfactory standards and procedures for conducting and administering a certification system, including periodic follow up activities to assure that basic models of electric motor continue to conform to the efficiency levels for which they were certified, and for granting a certificate of conformity.

(2) It must be independent of electric motor manufacturers, importers, distributors, private labelers or vendors. It cannot be affiliated with, have financial ties with, be controlled by, or be under common control with any such entity.

(3) It must be qualified to operate a certification system in a highly competent manner.

(4) It must be expert in the content and application of the test procedures and methodologies in IEEE Std 112–2004 Test Method B or CSA C390–10, (incorporated by reference, see § 431.15). It must have satisfactory criteria and procedures for the selection and sampling of electric motors tested for energy efficiency.

(c) *Petition format*. Each petition requesting classification as a nationally recognized certification program must contain a narrative statement as to why the program meets the criteria listed in paragraph (b) of this section, must be signed on behalf of the organization operating the program by an authorized representative, and must be accompanied by documentation that supports the narrative statement. The following provides additional guidance as to the specific criteria:

(1) *Standards and procedures*. A copy of the standards and procedures for operating a certification system and for granting a certificate of conformity should accompany the petition.

(2) *Independent status*. The petitioning organization should identify and describe any relationship, direct or indirect, that it or the certification program has with an electric motor manufacturer, importer, distributor, private labeler, vendor, trade association or other such entity, as well as any other relationship it believes might appear to create a conflict of interest for the certification program in operating a certification system for compliance by electric motors with energy efficiency standards. It should explain why it believes such relationship would not compromise its independence in operating a certification program.

(3) *Qualifications to operate a certification system*. Experience in operating a certification system should be discussed and substantiated by supporting documents. Of particular relevance would be documentary evidence that establishes experience in the application of guidelines contained in the ISO/IEC Guide 65, *General requirements for bodies operating product certification systems*, ISO/IEC Guide 27, *Guidelines for corrective action to be taken by a certification body in the event of either misapplication of its mark of conformity to a product, or products which bear the mark of the certification body being found to subject persons or property to risk*, and ISO/IEC Guide 28, *General rules for a model third-party certification system for products*, as well as experience in overseeing compliance with the guidelines contained in the ISO/IEC Guide 25, *General requirements for the competence of*

calibration and testing laboratories (referenced for guidance only, see § 431.14).

(4) *Expertise in electric motor test procedures.* The petition should set forth the program's experience with the test procedures and methodologies in IEEE Std 112–2004 Test Method B or CSA C390–10, (incorporated by reference, see § 431.15). This part of the petition should include items such as, but not limited to, a description of prior projects and qualifications of staff members. Of particular relevance would be documentary evidence that establishes experience in applying guidelines contained in the ISO/IEC Guide 25, General Requirements for the Competence of Calibration and Testing Laboratories (referenced for guidance only, see 431.14) to energy efficiency testing for electric motors.

(d) *Disposition.* The Department will evaluate the petition in accordance with § 431.21, and will determine whether the applicant meets the criteria in paragraph (b) of this section for classification as a nationally recognized certification program.

[69 FR 61923, Oct. 21, 2004, as amended at 77 FR 26635, May 4, 2012]

§ 431.21 Procedures for recognition and withdrawal of recognition of accreditation bodies and certification programs.

(a) *Filing of petition.* Any petition submitted to the Department pursuant to §§ 431.19(a) or 431.20(a), shall be entitled ''Petition for Recognition'' (''Petition'') and must be submitted, in triplicate to the Assistant Secretary for Energy Efficiency and Renewable Energy, U.S. Department of Energy, Forrestal Building, 1000 Independence Avenue, SW., Washington, DC 20585–0121. In accordance with the provisions set forth in 10 CFR 1004.11, any request for confidential treatment of any information contained in such a Petition or in supporting documentation must be accompanied by a copy of the Petition or supporting documentation from which the information claimed to be confidential has been deleted.

(b) *Public notice and solicitation of comments.* DOE shall publish in the FEDERAL REGISTER the Petition from which confidential information, as determined by DOE, has been deleted in accordance with 10 CFR 1004.11 and shall solicit comments, data and information on whether the Petition should be granted. The Department shall also make available for inspection and copying the Petition's supporting documentation from which confidential information, as determined by DOE, has been deleted in accordance with 10 CFR 1004.11. Any person submitting written comments to DOE with respect to a Petition shall also send a copy of such comments to the petitioner.

(c) *Responsive statement by the petitioner.* A petitioner may, within 10 working days of receipt of a copy of any comments submitted in accordance with paragraph (b) of this section, respond to such comments in a written statement submitted to the Assistant Secretary for Energy Efficiency and Renewable Energy. A petitioner may address more than one set of comments in a single responsive statement.

(d) *Public announcement of interim determination and solicitation of comments.* The Assistant Secretary for Energy Efficiency and Renewable Energy shall issue an interim determination on the Petition as soon as is practicable following receipt and review of the Petition and other applicable documents, including, but not limited to, comments and responses to comments. The petitioner shall be notified in writing of the interim determination. DOE shall also publish in the FEDERAL REGISTER the interim determination and shall solicit comments, data and information with respect to that interim determination. Written comments and responsive statements may be submitted as provided in paragraphs (b) and (c) of this section.

(e) *Public announcement of final determination.* The Assistant Secretary for Energy Efficiency and Renewable Energy shall as soon as practicable, following receipt and review of comments and responsive statements on the interim determination, publish in the FEDERAL REGISTER a notice of final determination on the Petition.

(f) *Additional information.* The Department may, at any time during the recognition process, request additional relevant information or conduct an investigation concerning the Petition. The Department's determination on a

Petition may be based solely on the Petition and supporting documents, or may also be based on such additional information as the Department deems appropriate.

(g) *Withdrawal of recognition*—(1) *Withdrawal by the Department.* If the Department believes that an accreditation body or certification program that has been recognized under §§ 431.19 or 431.20, respectively, is failing to meet the criteria of paragraph (b) of the section under which it is recognized, the Department will so advise such entity and request that it take appropriate corrective action. The Department will give the entity an opportunity to respond. If after receiving such response, or no response, the Department believes satisfactory correction has not been made, the Department will withdraw its recognition from that entity.

(2) *Voluntary withdrawal.* An accreditation body or certification program may withdraw itself from recognition by the Department by advising the Department in writing of such withdrawal. It must also advise those that use it (for an accreditation body, the testing laboratories, and for a certification organization, the manufacturers) of such withdrawal.

(3) *Notice of withdrawal of recognition.* The Department will publish in the FEDERAL REGISTER a notice of any withdrawal of recognition that occurs pursuant to this paragraph.

ENERGY CONSERVATION STANDARDS

§ 431.25 Energy conservation standards and effective dates.

(a) Except as provided for fire pump electric motors in paragraph (b) of this section, each general purpose electric motor (subtype I) with a power rating of 1 horsepower or greater, but not greater than 200 horsepower, including a NEMA Design B or an equivalent IEC Design N motor that is a general purpose electric motor (subtype I), manufactured (alone or as a component of another piece of equipment) on or after December 19, 2010, but before June 1, 2016, shall have a nominal full-load efficiency that is not less than the following:

TABLE 1—NOMINAL FULL-LOAD EFFICIENCIES OF GENERAL PURPOSE ELECTRIC MOTORS (SUBTYPE I), EXCEPT FIRE PUMP ELECTRIC MOTORS

Motor horsepower/Standard kilowatt equivalent	Nominal full-load efficiency					
	Open motors (number of poles)			Enclosed motors (number of poles)		
	6	4	2	6	4	2
1/.75	82.5	85.5	77.0	82.5	85.5	77.0
1.5/1.1	86.5	86.5	84.0	87.5	86.5	84.0
2/1.5	87.5	86.5	85.5	88.5	86.5	85.5
3/2.2	88.5	89.5	85.5	89.5	89.5	86.5
5/3.7	89.5	89.5	86.5	89.5	89.5	88.5
7.5/5.5	90.2	91.0	88.5	91.0	91.7	89.5
10/7.5	91.7	91.7	89.5	91.0	91.7	90.2
15/11	91.7	93.0	90.2	91.7	92.4	91.0
20/15	92.4	93.0	91.0	91.7	93.0	91.0
25/18.5	93.0	93.6	91.7	93.0	93.6	91.7
30/22	93.6	94.1	91.7	93.0	93.6	91.7
40/30	94.1	94.1	92.4	94.1	94.1	92.4
50/37	94.1	94.5	93.0	94.1	94.5	93.0
60/45	94.5	95.0	93.6	94.5	95.0	93.6
75/55	94.5	95.0	93.6	94.5	95.4	93.6
100/75	95.0	95.4	93.6	95.0	95.4	94.1
125/90	95.0	95.4	94.1	95.0	95.4	95.0
150/110	95.4	95.8	94.1	95.8	95.8	95.0
200/150	95.4	95.8	95.0	95.8	96.2	95.4

(b) Each fire pump electric motor that is a general purpose electric motor (subtype I) or general purpose electric motor (subtype II) manufactured (alone or as a component of another piece of equipment) on or after December 19, 2010, but before June 1, 2016, shall have a nominal full-load efficiency that is not less than the following:

TABLE 2—NOMINAL FULL-LOAD EFFICIENCIES OF FIRE PUMP ELECTRIC MOTORS

Motor horsepower/standard kilowatt equivalent	Nominal full-load efficiency							
	Open motors (number of poles)				Enclosed motors (number of poles)			
	8	6	4	2	8	6	4	2
1/.75	74.0	80.0	82.5	.....	74.0	80.0	82.5	75.5
1.5/1.1	75.5	84.0	84.0	82.5	77.0	85.5	84.0	82.5
2/1.5	85.5	85.5	84.0	84.0	82.5	86.5	84.0	84.0
3/2.2	86.5	86.5	86.5	84.0	84.0	87.5	87.5	85.5
5/3.7	87.5	87.5	87.5	85.5	85.5	87.5	87.5	87.5
7.5/5.5	88.5	88.5	88.5	87.5	85.5	89.5	89.5	88.5
10/7.5	89.5	90.2	89.5	88.5	88.5	89.5	89.5	89.5
15/11	89.5	90.2	91.0	89.5	88.5	90.2	91.0	90.2
20/15	90.2	91.0	91.0	90.2	89.5	90.2	91.0	90.2
25/18.5	90.2	91.7	91.7	91.0	89.5	91.7	92.4	91.0
30/22	91.0	92.4	92.4	91.0	91.0	91.7	92.4	91.0
40/30	91.0	93.0	93.0	91.7	91.0	93.0	93.0	91.7
50/37	91.7	93.0	93.0	92.4	91.7	93.0	93.0	92.4
60/45	92.4	93.6	93.6	93.0	91.7	93.6	93.6	93.0
75/55	93.6	93.6	94.1	93.0	93.0	93.6	94.1	93.0
100/75	93.6	94.1	94.1	93.0	93.0	94.1	94.5	93.6
125/90	93.6	94.1	94.5	93.6	93.6	94.1	94.5	94.5
150/110	93.6	94.5	95.0	93.6	93.6	95.0	95.0	94.5
200/150	93.6	94.5	95.0	94.5	94.1	95.0	95.0	95.0
250/186	94.5	95.4	95.4	94.5	94.5	95.0	95.0	95.4
300/224	.....	95.4	95.4	95.0	.....	95.0	95.4	95.4
350/261	.....	95.4	95.4	95.0	.....	95.0	95.4	95.4
400/298	.....	.....	95.4	95.4	.....	.....	95.4	95.4
450/336	.....	.....	95.8	95.8	.....	.....	95.4	95.4
500/373	.....	.....	95.8	95.8	.....	.....	95.8	95.4

(c) Except as provided for fire pump electric motors in paragraph (b) of this section, each general purpose electric motor (subtype II) with a power rating of 1 horsepower or greater, but not greater than 200 horsepower, including a NEMA Design B or an equivalent IEC Design N motor that is a general purpose electric motor (subtype II), manufactured (alone or as a component of another piece of equipment) on or after December 19, 2010, but before June 1, 2016, shall have a nominal full-load efficiency that is not less than the following:

TABLE 3—NOMINAL FULL-LOAD EFFICIENCIES OF GENERAL PURPOSE ELECTRIC MOTORS (SUBTYPE II), EXCEPT FIRE PUMP ELECTRIC MOTORS

Motor horsepower/ Standard kilowatt equivalent	Nominal full-load efficiency							
	Open motors (number of poles)				Enclosed motors (number of poles)			
	8	6	4	2	8	6	4	2
1/.75	74.0	80.0	82.5	.....	74.0	80.0	82.5	75.5
1.5/1.1	75.5	84.0	84.0	82.5	77.0	85.5	84.0	82.5
2/1.5	85.5	85.5	84.0	84.0	82.5	86.5	84.0	84.0
3/2.2	86.5	86.5	86.5	84.0	84.0	87.5	87.5	85.5
5/3.7	87.5	87.5	87.5	85.5	85.5	87.5	87.5	87.5
7.5/5.5	88.5	88.5	88.5	87.5	85.5	89.5	89.5	88.5
10/7.5	89.5	90.2	89.5	88.5	88.5	89.5	89.5	89.5
15/11	89.5	90.2	91.0	89.5	88.5	90.2	91.0	90.2
20/15	90.2	91.0	91.0	90.2	89.5	90.2	91.0	90.2
25/18.5	90.2	91.7	91.7	91.0	89.5	91.7	92.4	91.0
30/22	91.0	92.4	92.4	91.0	91.0	91.7	92.4	91.0
40/30	91.0	93.0	93.0	91.7	91.0	93.0	93.0	91.7
50/37	91.7	93.0	93.0	92.4	91.7	93.0	93.0	92.4
60/45	92.4	93.6	93.6	93.0	91.7	93.6	93.6	93.0
75/55	93.6	93.6	94.1	93.0	93.0	93.6	94.1	93.0
100/75	93.6	94.1	94.1	93.0	93.0	94.1	94.5	93.6
125/90	93.6	94.1	94.5	93.6	93.6	94.1	94.5	94.5
150/110	93.6	94.5	95.0	93.6	93.6	95.0	95.0	94.5

TABLE 3—NOMINAL FULL-LOAD EFFICIENCIES OF GENERAL PURPOSE ELECTRIC MOTORS (SUBTYPE II), EXCEPT FIRE PUMP ELECTRIC MOTORS—Continued

Motor horsepower/ Standard kilowatt equivalent	Nominal full-load efficiency							
	Open motors (number of poles)				Enclosed motors (number of poles)			
	8	6	4	2	8	6	4	2
200/150	93.6	94.5	95.0	94.5	94.1	95.0	95.0	95.0

(d) Each NEMA Design B or an equivalent IEC Design N motor that is a general purpose electric motor (subtype I) or general purpose electric motor (subtype II), excluding fire pump electric motors, with a power rating of more than 200 horsepower, but not greater than 500 horsepower, manufactured (alone or as a component of another piece of equipment) on or after December 19, 2010, but before June 1, 2016 shall have a nominal full-load efficiency that is not less than the following:

TABLE 4—NOMINAL FULL-LOAD EFFICIENCIES OF NEMA DESIGN B GENERAL PURPOSE ELECTRIC MOTORS (SUBTYPE I AND II), EXCEPT FIRE PUMP ELECTRIC MOTORS

Motor horsepower/ standard kilowatt equivalent	Nominal full-load efficiency							
	Open motors (number of poles)				Enclosed motors (number of poles)			
	8	6	4	2	8	6	4	2
250/186	94.5	95.4	95.4	94.5	94.5	95.0	95.0	95.4
300/224	.....	95.4	95.4	95.0	.....	95.0	95.4	95.4
350/261	.....	95.4	95.4	95.0	.....	95.0	95.4	95.4
400/298	.....	.....	95.4	95.4	.....	.....	95.4	95.4
450/336	.....	.....	95.8	95.8	.....	.....	95.4	95.4
500/373	.....	.....	95.8	95.8	.....	.....	95.8	95.4

(e) For purposes of determining the required minimum nominal full-load efficiency of an electric motor that has a horsepower or kilowatt rating between two horsepower or two kilowatt ratings listed in any table of energy conservation standards in paragraphs (a) through (d) of this section, each such motor shall be deemed to have a listed horsepower or kilowatt rating, determined as follows:

(1) A horsepower at or above the midpoint between the two consecutive horsepowers shall be rounded up to the higher of the two horsepowers;

(2) A horsepower below the midpoint between the two consecutive horsepowers shall be rounded down to the lower of the two horsepowers; or

(3) A kilowatt rating shall be directly converted from kilowatts to horsepower using the formula 1 kilowatt = $(^{1}/_{0.746})$ horsepower. The conversion should be calculated to three significant decimal places, and the resulting horsepower shall be rounded in accordance with paragraph (e)(1) or (e)(2) of this section, whichever applies.

(f) The standards in Table 1 through Table 4 of this section do not apply to definite purpose electric motors, special purpose electric motors, or those motors exempted by the Secretary.

(g) The standards in Table 5 through Table 7 of this section apply only to electric motors, including partial electric motors, that satisfy the following criteria:

(1) Are single-speed, induction motors;

(2) Are rated for continuous duty (MG 1) operation or for duty type S1 (IEC);

(3) Contain a squirrel-cage (MG 1) or cage (IEC) rotor;

(4) Operate on polyphase alternating current 60-hertz sinusoidal line power;

(5) Are rated 600 volts or less;

(6) Have a 2-, 4-, 6-, or 8-pole configuration,

(7) Are built in a three-digit or four-digit NEMA frame size (or IEC metric

equivalent), including those designs between two consecutive NEMA frame sizes (or IEC metric equivalent), or an enclosed 56 NEMA frame size (or IEC metric equivalent),

(8) Produce at least one horsepower (0.746 kW) but not greater than 500 horsepower (373 kW), and

(9) Meet all of the performance requirements of one of the following motor types: A NEMA Design A, B, or C motor or an IEC Design N or H motor.

(h) Starting on June 1, 2016, each NEMA Design A motor, NEMA Design B motor, and IEC Design N motor that is an electric motor meeting the criteria in paragraph (g) of this section and with a power rating from 1 horsepower through 500 horsepower, but excluding fire pump electric motors, manufactured (alone or as a component of another piece of equipment) shall have a nominal full-load efficiency of not less than the following:

TABLE 5—NOMINAL FULL-LOAD EFFICIENCIES OF NEMA DESIGN A, NEMA DESIGN B AND IEC DESIGN N MOTORS (EXCLUDING FIRE PUMP ELECTRIC MOTORS) AT 60 HZ

Motor horsepower/ standard kilowatt equivalent	Nominal full-load efficiency (%)							
	2 Pole		4 Pole		6 Pole		8 Pole	
	Enclosed	Open	Enclosed	Open	Enclosed	Open	Enclosed	Open
1/.75	77.0	77.0	85.5	85.5	82.5	82.5	75.5	75.5
1.5/1.1	84.0	84.0	86.5	86.5	87.5	86.5	78.5	77.0
2/1.5	85.5	85.5	86.5	86.5	88.5	87.5	84.0	86.5
3/2.2	86.5	85.5	89.5	89.5	89.5	88.5	85.5	87.5
5/3.7	88.5	86.5	89.5	89.5	89.5	89.5	86.5	88.5
7.5/5.5	89.5	88.5	91.7	91.0	91.0	90.2	86.5	89.5
10/7.5	90.2	89.5	91.7	91.7	91.0	91.7	89.5	90.2
15/11	91.0	90.2	92.4	93.0	91.7	91.7	89.5	90.2
20/15	91.0	91.0	93.0	93.0	91.7	92.4	90.2	91.0
25/18.5	91.7	91.7	93.6	93.6	93.0	93.0	90.2	91.0
30/22	91.7	91.7	93.6	94.1	93.0	93.6	91.7	91.7
40/30	92.4	92.4	94.1	94.1	94.1	94.1	91.7	91.7
50/37	93.0	93.0	94.5	94.5	94.1	94.1	92.4	92.4
60/45	93.6	93.6	95.0	95.0	94.5	94.5	92.4	93.0
75/55	93.6	93.6	95.4	95.0	94.5	94.5	93.6	94.1
100/75	94.1	93.6	95.4	95.4	95.0	95.0	93.6	94.1
125/90	95.0	94.1	95.4	95.4	95.0	95.0	94.1	94.1
150/110	95.0	94.1	95.8	95.8	95.8	95.4	94.1	94.1
200/150	95.4	95.0	96.2	95.8	95.8	95.4	94.5	94.1
250/186	95.8	95.0	96.2	95.8	95.8	95.8	95.0	95.0
300/224	95.8	95.4	96.2	95.8	95.8	95.8		
350/261	95.8	95.4	96.2	95.8	95.8	95.8		
400/298	95.8	95.8	96.2	95.8	.....	.....		
450/336	95.8	96.2	96.2	96.2	.....	.....		
500/373	95.8	96.2	96.2	96.2	.....	.....	.....	.....

(i) Starting on June 1, 2016, each NEMA Design C motor and IEC Design H motor that is an electric motor meeting the criteria in paragraph (g) of this section and with a power rating from 1 horsepower through 200 horsepower manufactured (alone or as a component of another piece of equipment) shall have a nominal full-load efficiency that is not less than the following:

TABLE 6—NOMINAL FULL-LOAD EFFICIENCIES OF NEMA DESIGN C AND IEC DESIGN H MOTORS AT 60 HZ

Motor horsepower/standard kilowatt equivalent	Nominal full-load efficiency (%)					
	4 Pole		6 Pole		8 Pole	
	Enclosed	Open	Enclosed	Open	Enclosed	Open
1/.75	85.5	85.5	82.5	82.5	75.5	75.5
1.5/1.1	86.5	86.5	87.5	86.5	78.5	77.0
2/1.5	86.5	86.5	88.5	87.5	84.0	86.5
3/2.2	89.5	89.5	89.5	88.5	85.5	87.5

TABLE 6—NOMINAL FULL-LOAD EFFICIENCIES OF NEMA DESIGN C AND IEC DESIGN H MOTORS AT 60 HZ—Continued

Motor horsepower/standard kilowatt equivalent	Nominal full-load efficiency (%)					
	4 Pole		6 Pole		8 Pole	
	Enclosed	Open	Enclosed	Open	Enclosed	Open
5/3.7	89.5	89.5	89.5	89.5	86.5	88.5
7.5/5.5	91.7	91.0	91.0	90.2	86.5	89.5
10/7.5	91.7	91.7	91.0	91.7	89.5	90.2
15/11	92.4	93.0	91.7	91.7	89.5	90.2
20/15	93.0	93.0	91.7	92.4	90.2	91.0
25/18.5	93.6	93.6	93.0	93.0	90.2	91.0
30/22	93.6	94.1	93.0	93.6	91.7	91.7
40/30	94.1	94.1	94.1	94.1	91.7	91.7
50/37	94.5	94.5	94.1	94.1	92.4	92.4
60/45	95.0	95.0	94.5	94.5	92.4	93.0
75/55	95.4	95.0	94.5	94.5	93.6	94.1
100/75	95.4	95.4	95.0	95.0	93.6	94.1
125/90	95.4	95.4	95.0	95.0	94.1	94.1
150/110	95.8	95.8	95.8	95.4	94.1	94.1
200/150	96.2	95.8	95.8	95.4	94.5	94.1

(j) Starting on June 1, 2016, each fire pump electric motor meeting the criteria in paragraph (g) of this section and with a power rating of 1 horsepower through 500 horsepower, manufactured (alone or as a component of another piece of equipment) shall have a nominal full-load efficiency that is not less than the following:

TABLE 7—NOMINAL FULL-LOAD EFFICIENCIES OF FIRE PUMP ELECTRIC MOTORS AT 60 HZ

Motor horsepower/standard kilowatt equivalent	Nominal full-load efficiency (%)							
	2 Pole		4 Pole		6 Pole		8 Pole	
	Enclosed	Open	Enclosed	Open	Enclosed	Open	Enclosed	Open
1/.75	75.5	.....	82.5	82.5	80.0	80.0	74.0	74.0
1.5/1.1	82.5	82.5	84.0	84.0	85.5	84.0	77.0	75.5
2/1.5	84.0	84.0	84.0	84.0	86.5	85.5	82.5	85.5
3/2.2	85.5	84.0	87.5	86.5	87.5	86.5	84.0	86.5
5/3.7	87.5	85.5	87.5	87.5	87.5	87.5	85.5	87.5
7.5/5.5	88.5	87.5	89.5	88.5	89.5	88.5	85.5	88.5
10/7.5	89.5	88.5	89.5	89.5	89.5	90.2	88.5	89.5
15/11	90.2	89.5	91.0	91.0	90.2	90.2	88.5	89.5
20/15	90.2	90.2	91.0	91.0	90.2	91.0	89.5	90.2
25/18.5	91.0	91.0	92.4	91.7	91.7	91.7	89.5	90.2
30/22	91.0	91.0	92.4	92.4	91.7	92.4	91.0	91.0
40/30	91.7	91.7	93.0	93.0	93.0	93.0	91.0	91.0
50/37	92.4	92.4	93.0	93.0	93.0	93.0	91.7	91.7
60/45	93.0	93.0	93.6	93.6	93.6	93.6	91.7	92.4
75/55	93.0	93.0	94.1	94.1	93.6	93.6	93.0	93.6
100/75	93.6	93.0	94.5	94.1	94.1	94.1	93.0	93.6
125/90	94.5	93.6	94.5	94.5	94.1	94.1	93.6	93.6
150/110	94.5	93.6	95.0	95.0	95.0	94.5	93.6	93.6
200/150	95.0	94.5	95.0	95.0	95.0	94.5	94.1	93.6
250/186	95.4	94.5	95.0	95.4	95.0	95.4	94.5	94.5
300/224	95.4	95.0	95.4	95.4	95.0	95.4		
350/261	95.4	95.0	95.4	95.4	95.0	95.4		
400/298	95.4	95.4	95.4	95.4	.....	.....		
450/336	95.4	95.8	95.4	95.8	.....	.....		
500/373	95.4	95.8	95.8	95.8	.....	.....	.....	.....

(k) For purposes of determining the required minimum nominal full-load efficiency of an electric motor that has a horsepower or kilowatt rating between two horsepower or two kilowatt ratings listed in any table of energy conservation standards in paragraphs (h) through (l) of this section, each

such motor shall be deemed to have a listed horsepower or kilowatt rating, determined as follows:

(1) A horsepower at or above the midpoint between the two consecutive horsepowers shall be rounded up to the higher of the two horsepowers;

(2) A horsepower below the midpoint between the two consecutive horsepowers shall be rounded down to the lower of the two horsepowers; or

(3) A kilowatt rating shall be directly converted from kilowatts to horsepower using the formula 1 kilowatt = $(^{1}/_{0.746})$ horsepower. The conversion should be calculated to three significant decimal places, and the resulting horsepower shall be rounded in accordance with paragraph (k)(1) or (k)(2) of this section, whichever applies.

(l) The standards in Table 5 through Table 7 of this section do not apply to the following electric motors exempted by the Secretary, or any additional electric motors that the Secretary may exempt:

(1) Air-over electric motors;

(2) Component sets of an electric motor;

(3) Liquid-cooled electric motors;

(4) Submersible electric motors; and

(5) Inverter-only electric motors.

[79 FR 31010, May 29, 2014]

§ 431.26 Preemption of State regulations.

Any State regulation providing for any energy conservation standard, or other requirement with respect to the energy efficiency or energy use, of an electric motor that is not identical to a Federal standard in effect under this subpart is preempted by that standard, except as provided for in Section 345(a) and 327(b) and (c) of the Act.

LABELING

§ 431.31 Labeling requirements.

(a) *Electric motor nameplate*—(1) *Required information*. The permanent nameplate of an electric motor for which standards are prescribed in § 431.25 must be marked clearly with the following information:

(i) The motor's nominal full load efficiency (as of the date of manufacture), derived from the motor's average full load efficiency as determined pursuant to this subpart; and

(ii) A Compliance Certification number (''CC number'') supplied by DOE to the manufacturer or private labeler, pursuant to § 431.36(f), and applicable to that motor. Such CC number must be on the nameplate of a motor beginning 90 days after either:

(A) The manufacturer or private labeler has received the number upon submitting a Compliance Certification covering that motor, or

(B) The expiration of 21 days from DOE's receipt of a Compliance Certification covering that motor, if the manufacturer or private labeler has not been advised by DOE that the Compliance Certification fails to satisfy § 431.36.

(2) *Display of required information*. All orientation, spacing, type sizes, type faces, and line widths to display this required information shall be the same as or similar to the display of the other performance data on the motor's permanent nameplate. The nominal full-load efficiency shall be identified either by the term ''Nominal Efficiency'' or ''Nom. Eff.'' or by the terms specified in paragraph 12.58.2 of NEMA MG1–2009, (incorporated by reference, see § 431.15) as for example ''NEMA Nom. Eff. ____.'' The Compliance Certification number issued pursuant to § 431.36 shall be in the form ''CC ____.''

(3) *Optional display*. The permanent nameplate of an electric motor, a separate plate, or decalcomania, may be marked with the encircled lower case letters ''ee'', for example,

or with some comparable designation or logo, if the motor meets the applicable standard prescribed in § 431.25, as determined pursuant to this subpart, and is covered by a Compliance Certification that satisfies § 431.36.

(b) *Disclosure of efficiency information in marketing materials*. (1) The same information that must appear on an electric motor's permanent nameplate pursuant to paragraph (a)(1) of this section, shall be prominently displayed:

(i) On each page of a catalog that lists the motor; and

(ii) In other materials used to market the motor.

(2) The ''ee'' logo, or other similar logo or designations, may also be used in catalogs and other materials to the same extent they may be used on labels under paragraph (a)(3) of this section.

[69 FR 61923, Oct. 21, 2004, as amended at 77 FR 26637, May 4, 2012]

§ 431.32 Preemption of State regulations.

The provisions of § 431.31 supersede any State regulation to the extent required by Section 327 of the Act. Pursuant to the Act, all State regulations that require the disclosure for any electric motor of information with respect to energy consumption, other than the information required to be disclosed in accordance with this part, are superseded.

CERTIFICATION

§ 431.35 Applicability of certification requirements.

Section 431.36 sets forth the procedures for manufacturers to certify that electric motors comply with the applicable energy efficiency standards set forth in this subpart.

§ 431.36 Compliance Certification.

(a) *General.* A manufacturer or private labeler shall not distribute in commerce any basic model of an electric motor which is subject to an energy efficiency standard set forth in this subpart unless it has submitted to the Department a Compliance Certification certifying, in accordance with the provisions of this section, that the basic model meets the requirements of the applicable standard. The representations in the Compliance Certification must be based upon the basic model's energy efficiency as determined in accordance with the applicable requirements of this subpart. This means, in part, that either:

(1) The representations as to the basic model must be based on use of a certification organization; or

(2) Any testing of the basic model on which the representations are based must be conducted at an accredited laboratory.

(b) *Required contents*—(1) *General representations.* Each Compliance Certification must certify that:

(i) The nominal full load efficiency for each basic model of electric motor distributed is not less than the minimum nominal full load efficiency required for that motor by § 431.25;

(ii) All required determinations on which the Compliance Certification is based were made in compliance with the applicable requirements prescribed in this subpart;

(iii) All information reported in the Compliance Certification is true, accurate, and complete; and

(iv) The manufacturer or private labeler is aware of the penalties associated with violations of the Act and the regulations thereunder, and of 18 U.S.C. 1001 which prohibits knowingly making false statements to the Federal Government.

(2) *Specific data.* (i) For each rating of electric motor (as the term ''rating'' is defined in the definition of basic model) which a manufacturer or private labeler distributes, the Compliance Certification must report the nominal full load efficiency, determined pursuant to §§ 431.16 and 431.17, of the least efficient basic model within that rating.

(ii) The Compliance Certification must identify the basic models on which actual testing has been performed to meet the requirements of § 431.17.

(iii) The format for a Compliance Certification is set forth in appendix C of this subpart.

(c) *Optional contents.* In any Compliance Certification, a manufacturer or private labeler may at its option request that DOE provide it with a unique Compliance Certification number (''CC number'') for any brand name, trademark or other label name under which the manufacturer or private labeler distributes electric motors covered by the Certification. Such a Compliance Certification must also identify all other names, if any, under which the manufacturer or private labeler distributes electric motors, and to which the request does not apply.

(d) *Signature and submission.* A manufacturer or private labeler must submit the Compliance Certification either on

its own behalf, signed by a corporate official of the company, or through a third party (for example, a trade association or other authorized representative) acting on its behalf. Where a third party is used, the Compliance Certification must identify the official of the manufacturer or private labeler who authorized the third party to make representations on the company's behalf, and must be signed by a corporate official of the third party. The Compliance Certification must be submitted to the Department electronically at *https://www.regulations.doe.gov/ccms*. Alternatively, the Compliance Certification may be submitted by certified mail to: Certification and Compliance Reports, U.S. Department of Energy, Office of Energy Efficiency and Renewable Energy, Building Technologies Program, EE–2J, Forrestal Building, 1000 Independence Avenue, SW., Washington, DC 20585–0121.

(e) *New basic models.* For electric motors, a Compliance Certification must be submitted for a new basic model only if the manufacturer or private labeler has not previously submitted to DOE a Compliance Certification, that meets the requirements of this section, for a basic model that has the same rating as the new basic model, and that has a lower nominal full load efficiency than the new basic model.

(f) *Response to Compliance Certification; Compliance Certification Number (CC number)*—(1) DOE processing of Certification. Promptly upon receipt of a Compliance Certification, the Department will determine whether the document contains all of the elements required by this section, and may, in its discretion, determine whether all or part of the information provided in the document is accurate. The Department will then advise the submitting party in writing either that the Compliance Certification does not satisfy the requirements of this section, in which case the document will be returned, or that the Compliance Certification satisfies this section. The Department will also advise the submitting party of the basis for its determination.

(2) *Issuance of CC number(s).* (i) Initial Compliance Certification. When DOE advises that the initial Compliance Certification submitted by or on behalf of a manufacturer or private labeler is acceptable, either:

(A) DOE will provide a single unique CC number, ''CC_____,'' to the manufacturer or private labeler, and such CC number shall be applicable to all electric motors distributed by the manufacturer or private labeler, or

(B) When required by paragraph (f)(3) of this section, DOE will provide more than one CC number to the manufacturer or private labeler.

(ii) Subsequent Compliance Certification. When DOE advises that any other Compliance Certification is acceptable, it will provide a unique CC number for any brand name, trademark or other name when required by paragraph (f)(3) of this section.

(iii) When DOE declines to provide a CC number as requested by a manufacturer or private labeler in accordance with § 431.36(c), DOE will advise the requester of the reasons for such refusal.

(3) *Issuance of two or more CC numbers.* (i) DOE will provide a unique CC number for each brand name, trademark or other label name for which a manufacturer or private labeler requests such a number in accordance with § 431.36(c), except as follows. DOE will not provide a CC number for any brand name, trademark or other label name

(A) For which DOE has previously provided a CC number, or

(B) That duplicates or overlaps with other names under which the manufacturer or private labeler sells electric motors.

(ii) Once DOE has provided a CC number for a particular name, that shall be the only CC number applicable to all electric motors distributed by the manufacturer or private labeler under that name.

(iii) If the Compliance Certification in which a manufacturer or private labeler requests a CC number is the initial Compliance Certification submitted by it or on its behalf, and it distributes electric motors not covered by the CC number(s) DOE provides in response to the request(s), DOE will also provide a unique CC number that shall be applicable to all of these other motors.

[69 FR 61923, Oct. 21, 2004, as amended at 76 FR 59006, Sept. 23, 2011; 77 FR 26638, May 4, 2012]

APPENDIX A TO SUBPART B OF PART 431 [RESERVED]

APPENDIX B TO SUBPART B OF PART 431—UNIFORM TEST METHOD FOR MEASURING NOMINAL FULL LOAD EFFICIENCY OF ELECTRIC MOTORS

NOTE: After June 11, 2014, any representations made with respect to the energy use or efficiency of electric motors for which energy conservation standards are currently provided at 10 CFR 431.25 must be made in accordance with the results of testing pursuant to this appendix.

For manufacturers conducting tests of motors for which energy conservation standards are provided at 10 CFR 431.25, after January 13, 2014 and prior to June 11, 2014, manufacturers must conduct such test in accordance with either this appendix or appendix B as it appeared at 10 CFR Part 431, subpart B, appendix B, in the 10 CFR Parts 200 to 499 edition revised as of January 1, 2013. Any representations made with respect to the energy use or efficiency of such electric motors must be in accordance with whichever version is selected. Given that after June 11, 2014 representations with respect to the energy use or efficiency of electric motors must be made in accordance with tests conducted pursuant to this appendix, manufacturers may wish to begin using this test procedure as soon as possible.

For any other electric motor type that is not currently covered by the energy conservation standards at 10 CFR 431.25, manufacturers of this equipment will need to use Appendix B 180 days after the effective date of the final rule adopting energy conservation standards for these motors.

1. *Definitions.*

Definitions contained in §§431.2 and 431.12 are applicable to this appendix.

2. *Test Procedures.*

Efficiency and losses shall be determined in accordance with NEMA MG1–2009, paragraph 12.58.1, ''Determination of Motor Efficiency and Losses,'' (incorporated by reference, see §431.15) and either:

(1) CSA C390–10, (incorporated by reference, see §431.15), or

(2) IEEE Std 112–2004 Test Method B, Input-Output With Loss Segregation, (incorporated by reference, see §431.15).

3. *Amendments to test procedures.*

Any revision to IEEE Std 112–2004 Test Method B, NEMA MG1–2009, or CSA C390–10, (incorporated by reference, see §431.15) shall not be effective for purposes of certification and compliance testing unless and until this appendix and 10 CFR Part 431 are amended to incorporate that revision.

4. Procedures for the Testing of Certain Electric Motor Types.

Prior to testing according to IEEE Std 112–2004 (Test Method B) or CSA C390–10 (incorporated by reference, see §431.15), each basic model of the electric motor types listed below must be set up in accordance with the instructions of this section to ensure consistent test results. These steps are designed to enable a motor to be attached to a dynamometer and run continuously for testing purposes. For the purposes of this appendix, a ''standard bearing'' is a 6000 series, either open or grease-lubricated double-shielded, single-row, deep groove, radial ball bearing.

4.1 Brake Electric Motors:

Brake electric motors shall be tested with the brake component powered separately from the motor such that it does not activate during testing. Additionally, for any 10-minute period during the test and while the brake is being powered such that it remains disengaged from the motor shaft, record the power consumed (i.e., watts). Only power used to drive the motor is to be included in the efficiency calculation; power supplied to prevent the brake from engaging is not included in this calculation. In lieu of powering the brake separately, the brake may be disengaged mechanically, if such a mechanism exists and if the use of this mechanism does not yield a different efficiency value than separately powering the brake electrically.

4.2 Close-Coupled Pump Electric Motors and Electric Motors with Single or Double Shaft Extensions of Non-Standard Dimensions or Design:

To attach the unit under test to a dynamometer, close-coupled pump electric motors and electric motors with single or double shaft extensions of non-standard dimensions or design must be tested using a special coupling adapter.

4.3 Electric Motors with Non-Standard Endshields or Flanges:

If it is not possible to connect the electric motor to a dynamometer with the non-standard endshield or flange in place, the testing laboratory shall replace the non-standard endshield or flange with an endshield or flange meeting NEMA or IEC specifications. The replacement component should be obtained from the manufacturer or, if the manufacturer chooses, machined by the testing laboratory after consulting with the manufacturer regarding the critical characteristics of the endshield.

4.4 Electric Motors with Non-Standard Bases, Feet or Mounting Configurations

An electric motor with a non-standard base, feet, or mounting configuration may be mounted on the test equipment using adaptive fixtures for testing as long as the mounting or use of adaptive mounting fixtures does not have an adverse impact on the performance of the electric motor, particularly on the cooling of the motor.

4.5 Electric Motors with a Separately-powered Blower:

For electric motors furnished with a separately-powered blower, the losses from the blower's motor should not be included in any efficiency calculation. This can be done either by powering the blower's motor by a source separate from the source powering the electric motor under test or by connecting leads such that they only measure the power of the motor under test.

4.6 Immersible Electric Motors

Immersible electric motors shall be tested with all contact seals removed but be otherwise unmodified.

4.7 Partial Electric Motors:

Partial electric motors shall be disconnected from their mated piece of equipment. After disconnection from the equipment, standard bearings and/or endshields shall be added to the motor, such that it is capable of operation. If an endshield is necessary, an endshield meeting NEMA or IEC specifications should be obtained from the manufacturer or, if the manufacturer chooses, machined by the testing laboratory after consulting with the manufacturer regarding the critical characteristics of the endshield.

4.8 Vertical Electric Motors and Electric Motors with Bearings Incapable of Horizontal Operation:

Vertical electric motors and electric motors with thrust bearings shall be tested in a horizontal or vertical configuration in accordance with IEEE 112 (Test Method B), depending on the testing facility's capabilities and construction of the motor, except if the motor is a vertical solid shaft normal thrust general purpose electric motor (subtype II), in which case it shall be tested in a horizontal configuration in accordance with IEEE 112 (Test Method B). Preference shall be given to testing a motor in its native orientation. If the unit under test cannot be reoriented horizontally due to its bearing construction, the electric motor's bearing(s) shall be removed and replaced with standard bearings. If the unit under test contains oil-lubricated bearings, its bearings shall be removed and replaced with standard bearings. Finally, if the unit under test contains a hollow shaft, a solid shaft shall be inserted, bolted to the non-drive end of the motor and welded on the drive end. Enough clearance shall be maintained such that attachment to a dynamometer is possible.

[77 FR 26638, May 4, 2012, as amended at 78 FR 75994, Dec. 13, 2013]

APPENDIX C TO SUBPART B OF PART 431—COMPLIANCE CERTIFICATION

CERTIFICATION OF COMPLIANCE WITH ENERGY EFFICIENCY STANDARDS FOR ELECTRIC MOTORS (OFFICE OF MANAGEMENT AND BUDGET CONTROL NUMBER: 1910–1400. EXPIRES FEBRUARY 13, 2014)

An electronic form is available at *https://www.regulations.doe.gov/ccms/.*

1. Name and Address of Company (the ''company''):

_____

_____

_____

_____

2. Name(s) to be Marked on Electric Motors to Which this Compliance Certification Applies:

_____

_____

_____

_____

3. If manufacturer or private labeler wishes to receive a unique Compliance Certification number for use with any particular brand name, trademark, or other label name, fill out the following two items:

A. List each brand name, trademark, or other label name for which the company requests a Compliance Certification number:

_____

_____

_____

B. List other name(s), if any, under which the company sells electric motors (if not listed in item 2 above):

_____

_____

_____

Submit electronically at *https://www.regulations.doe.gov/ccms.*

Submit paper form by Certified Mail to: U.S. Department of Energy, Office of Energy Efficiency and Renewable Energy, Building Technologies (EE–2J), Forrestal Building, 1000 Independence Avenue, SW., Washington, DC 20585–0121.

This Compliance Certification reports on and certifies compliance with requirements contained in 10 CFR Part 431 (Energy Conservation Program for Certain Commercial and Industrial Equipment) and Part C of the Energy Policy and Conservation Act (Pub. L. 94–163), and amendments thereto. It is signed by a responsible official of the above named company. Attached and incorporated as part of this Compliance Certification is a Listing of Electric Motor Efficiencies. For each rating of electric motor* for which the Listing specifies the nominal full load efficiency of a basic model, the company distributes no less

efficient basic model with that rating and all basic models with that rating comply with the applicable energy efficiency standard.

*For this purpose, the term ''rating'' means one of the combinations of an electric motor's horsepower (or standard kilowatt equivalent), number of poles, motor type, and open or enclosed construction, with respect to which §431.25 of 10 CFR Part 431 prescribes nominal full load efficiency standards.

Person to Contact for Further Information:

Name: _____

Address: _____

_____

_____

_____

Telephone Number: _____

Facsimile Number: _____

If any part of this Compliance Certification, including the Attachment, was prepared by a third party organization under the provisions of 10 CFR 431.36, the company official authorizing third party representations:

Name: _____

Address: _____

_____

_____

_____

Telephone Number: _____

Facsimile Number: _____

Third Party Organization Officially Acting as Representative:

Third Party Organization: _____

Responsible Person at the Organization: _____

_____

Address: _____

_____

_____

_____

Telephone Number: _____

Facsimile Number: _____

All required determinations on which this Compliance Certification is based were made in conformance with the applicable requirements in 10 CFR Part 431, subpart B. All information reported in this Compliance Certification is true, accurate, and complete. The company is aware of the penalties associated with violations of the Act and the regulations thereunder, and is also aware of the provisions contained in 18 U.S.C. 1001, which prohibits knowingly making false statements to the Federal Government.

Signature: _____

Date: _____

Name: _____

Title: _____

Firm or Organization: _____

ATTACHMENT OF CERTIFICATION OF COMPLIANCE WITH ENERGY EFFICIENCY STANDARDS FOR ELECTRIC MOTOR EFFICIENCIES

Date: _____

Name of Company: _____

Motor Type (i.e., general purpose electric motor (subtype I), fire pump electric motor, general purpose electric motor (subtype II), NEMA Design B general purpose electric motor)

_____

Motor horsepower/standard kilowatt equivalent	Least efficient basic model—(model numbers(s)) Nominal full-load efficiency							
	Open motors (number of poles)				Enclosed motors (number of poles)			
	8	6	4	2	8	6	4	2
1/.75								
1.5/1.1								
2/1.5								
3/2.2								
5/3.7								

Motor horsepower/standard kilowatt equivalent	Least efficient basic model—(model numbers(s)) Nominal full-load efficiency							
	Open motors (number of poles)				Enclosed motors (number of poles)			
	8	6	4	2	8	6	4	2
	_____	_____	_____	_____	_____	_____	_____	_____
	_____	_____	_____	_____	_____	_____	_____	_____
Etc	_____	_____	_____	_____	_____	_____	_____	_____
	_____	_____	_____	_____	_____	_____	_____	_____

Note: Place an asterisk beside each reported nominal full load efficiency that is determined by actual testing rather than by application of an alternative efficiency determination method. Also list below additional basic models that were subjected to actual testing.

Basic Model means all units of a given type of electric motor (or class thereof) manufactured by a single manufacturer, and which (i) have the same rating, (ii) have electrical design characteristics that are essentially identical, and (iii) do not have any differing physical or functional characteristics that affect energy consumption or efficiency.

Rating means one of the combinations of an electric motor's horsepower (or standard kilowatt equivalent), number of poles, motor type, and open or enclosed construction, with respect to which §431.25 of 10 CFR Part 431 prescribes nominal full load efficiency standards.

MODELS ACTUALLY TESTED AND NOT PREVIOUSLY IDENTIFIED

Motor horsepower/standard kilowatt equivalent	Least efficient basic model—(model numbers(s)) Nominal full-load efficiency							
	Open motors (number of poles)				Enclosed motors (number of poles)			
	8	6	4	2	8	6	4	2
_____	_____	_____	_____	_____	_____	_____	_____	_____
	_____	_____	_____	_____	_____	_____	_____	_____
_____	_____	_____	_____	_____	_____	_____	_____	_____
	_____	_____	_____	_____	_____	_____	_____	_____
_____	_____	_____	_____	_____	_____	_____	_____	_____
	_____	_____	_____	_____	_____	_____	_____	_____
_____	_____	_____	_____	_____	_____	_____	_____	_____
	_____	_____	_____	_____	_____	_____	_____	_____
_____	_____	_____	_____	_____	_____	_____	_____	_____
	_____	_____	_____	_____	_____	_____	_____	_____
_____	_____	_____	_____	_____	_____	_____	_____	_____
	_____	_____	_____	_____	_____	_____	_____	_____
Etc	_____	_____	_____	_____	_____	_____	_____	_____
	_____	_____	_____	_____	_____	_____	_____	_____

[69 FR 61923, Oct. 21, 2004, as amended at 76 FR 59006, Sept. 23, 2011]

Subpart C—Commercial Refrigerators, Freezers and Refrigerator-Freezers

SOURCE: 70 FR 60414, Oct. 18, 2005, unless otherwise noted.

§ 431.61 Purpose and scope.

This subpart contains energy conservation requirements for commercial refrigerators, freezers and refrigerator-freezers, pursuant to Part C of Title III of the Energy Policy and Conservation Act, as amended, 42 U.S.C. 6311–6317.

§ 431.62 Definitions concerning commercial refrigerators, freezers and refrigerator-freezers.

Air-curtain angle means:

(1) For equipment without doors and without a discharge air grille or discharge air honeycomb, the angle between a vertical line extended down from the highest point on the manufacturer's recommended load limit line and the load limit line itself, when the equipment is viewed in cross-section; and

(2) For all other equipment without doors, the angle formed between a vertical line and the straight line drawn by connecting the point at the inside edge of the discharge air opening with the point at the inside edge of the return air opening, when the equipment is viewed in cross-section.

Basic model means all commercial refrigeration equipment manufactured by one manufacturer within a single equipment class, having the same primary energy source, and that have essentially identical electrical, physical, and functional characteristics that affect energy consumption.

Chef base or griddle stand means commercial refrigeration equipment that is designed and marketed for the express purpose of having a griddle or other cooking appliance placed on top of it that is capable of reaching temperatures hot enough to cook food.

Closed solid means equipment with doors, and in which more than 75 percent of the outer surface area of all doors on a unit are not transparent.

Closed transparent means equipment with doors, and in which 25 percent or more of the outer surface area of all doors on the unit are transparent.

Commercial freezer means a unit of commercial refrigeration equipment in which all refrigerated compartments in the unit are capable of operating below 32 °F (±2 °F).

Commercial hybrid means a unit of commercial refrigeration equipment:

(1) That consists of two or more thermally separated refrigerated compartments that are in two or more different equipment families, and

(2) That is sold as a single unit.

Commercial refrigerator means a unit of commercial refrigeration equipment in which all refrigerated compartments in the unit are capable of operating at or above 32 °F (±2 °F).

Commercial refrigerator-freezer means a unit of commercial refrigeration equipment consisting of two or more refrigerated compartments where at least one refrigerated compartment is capable of operating at or above 32 °F (±2 °F) and at least one refrigerated compartment is capable of operating below 32 °F (±2 °F).

Commercial refrigerator, freezer, and refrigerator-freezer means refrigeration equipment that—

(1) Is not a consumer product (as defined in § 430.2 of part 430);

(2) Is not designed and marketed exclusively for medical, scientific, or research purposes;

(3) Operates at a chilled, frozen, combination chilled and frozen, or variable temperature;

(4) Displays or stores merchandise and other perishable materials horizontally, semi-vertically, or vertically;

(5) Has transparent or solid doors, sliding or hinged doors, a combination of hinged, sliding, transparent, or solid doors, or no doors;

(6) Is designed for pull-down temperature applications or holding temperature applications; and

(7) Is connected to a self-contained condensing unit or to a remote condensing unit.

Door means a movable panel that separates the interior volume of a unit of commercial refrigeration equipment from the ambient environment and is designed to facilitate access to the refrigerated space for the purpose of loading and unloading product. This includes hinged doors, sliding doors, and

drawers. This does not include night curtains.

Door angle means:

(1) For equipment with flat doors, the angle between a vertical line and the line formed by the plane of the door, when the equipment is viewed in cross-section; and

(2) For equipment with curved doors, the angle formed between a vertical line and the straight line drawn by connecting the top and bottom points where the display area glass joins the cabinet, when the equipment is viewed in cross-section.

Holding temperature application means a use of commercial refrigeration equipment other than a pull-down temperature application, except a blast chiller or freezer.

Horizontal Closed means equipment with hinged or sliding doors and a door angle greater than or equal to 45°.

Horizontal Open means equipment without doors and an air-curtain angle greater than or equal to 80° from the vertical.

Ice-cream freezer means a commercial freezer that is designed to operate at or below −5 °F (±2 °F) (−21 °C ±1.1 °C) and that the manufacturer designs, markets, or intends for the storing, displaying, or dispensing of ice cream.

Integrated average temperature means the average temperature of all test package measurements taken during the test.

Lighting occupancy sensor means a device which uses passive infrared, ultrasonic, or other motion-sensing technology to automatically turn off or dim lights within the equipment when no motion is detected in the sensor's coverage area for a certain preset period of time.

Lowest application product temperature means the lowest integrated average temperature at which a given basic model is capable of consistently operating (*i.e.*, maintaining so as to comply with the steady-state stabilization requirements specified in ASHRAE 72–2005 (incorporated by reference, see § 431.63) for the purposes of testing under the DOE test procedure).

Night curtain means a device which is temporarily deployed to decrease air exchange and heat transfer between the refrigerated case and the surrounding environment.

Operating temperature means the range of integrated average temperatures at which a self-contained commercial refrigeration unit or remote-condensing commercial refrigeration unit with a thermostat is capable of operating or, in the case of a remote-condensing commercial refrigeration unit without a thermostat, the range of integrated average temperatures at which the unit is marketed, designed, or intended to operate.

Pull-down temperature application means a commercial refrigerator with doors that, when fully loaded with 12 ounce beverage cans at 90 degrees F, can cool those beverages to an average stable temperature of 38 degrees F in 12 hours or less.

Rating temperature means the integrated average temperature a unit must maintain during testing (i.e., either as listed in the table at § 431.66(d)(1) or the lowest application product temperature).

Remote condensing unit means a factory-made assembly of refrigerating components designed to compress and liquefy a specific refrigerant that is remotely located from the refrigerated equipment and consists of 1 or more refrigerant compressors, refrigerant condensers, condenser fans and motors, and factory supplied accessories.

Scheduled lighting control means a device which automatically shuts off or dims the lighting in a display case at scheduled times throughout the day.

Self-contained condensing unit means a factory-made assembly of refrigerating components designed to compress and liquefy a specific refrigerant that is an integral part of the refrigerated equipment and consists of 1 or more refrigerant compressors, refrigerant condensers, condenser fans and motors, and factory supplied accessories.

Semivertical Open means equipment without doors and an air-curtain angle greater than or equal to 10° and less than 80° from the vertical.

Service over counter means equipment that has sliding or hinged doors in the back intended for use by sales personnel, with glass or other transparent material in the front for displaying merchandise, and that has a height not

greater than 66 inches and is intended to serve as a counter for transactions between sales personnel and customers. ''*Service over the counter, self-contained, medium temperature commercial refrigerator*'', also defined in this section, is one specific equipment class within the service over counter equipment family.

Service over the counter, self-contained, medium temperature commercial refrigerator or *SOC–SC–M* means a commercial refrigerator—

(1) That operates at temperatures at or above 32 °F;

(2) With a self-contained condensing unit;

(3) Equipped with sliding or hinged doors in the back intended for use by sales personnel, and with glass or other transparent material in the front for displaying merchandise; and

(4) That has a height not greater than 66 inches and is intended to serve as a counter for transactions between sales personnel and customers.

Test package means a packaged material that is used as a standard product temperature-measuring device.

Transparent means greater than or equal to 45 percent light transmittance, as determined in accordance with the ASTM Standard E 1084–86 (Reapproved 2009), (incorporated by reference, see § 431.63) at normal incidence and in the intended direction of viewing.

Vertical Closed means equipment with hinged or sliding doors and a door angle less than 45°.

Vertical Open means equipment without doors and an air-curtain angle greater than or equal to 0° and less than 10° from the vertical.

Wedge case means a commercial refrigerator, freezer, or refrigerator-freezer that forms the transition between two regularly shaped display cases.

[70 FR 60414, Oct. 18, 2005, as amended at 71 FR 71369, Dec. 8, 2006; 74 FR 1139, Jan. 9, 2009; 76 FR 12503, Mar. 7, 2011; 77 FR 10318, Feb. 21, 2012; 78 FR 62993, Oct. 23, 2013; 78 FR 79598, Dec. 31, 2013; 79 FR 22307, Apr. 21, 2014; 79 FR 17816, Mar. 28, 2014]

TEST PROCEDURES

§ 431.63 Materials incorporated by reference.

(a) *General.* We incorporate by reference the following standards into subpart C of part 431. The material listed has been approved for incorporation by reference by the Director of the Federal Register in accordance with 5 U.S.C. 552(a) and 1 CFR 51. Any subsequent amendment to a standard by the standard-setting organization will not affect the DOE regulations unless and until amended by DOE. Material is incorporated as it exists on the date of the approval and a notice of any change in the material will be published in the FEDERAL REGISTER. All approved material is available for inspection at the National Archives and Records Administration (NARA). For information on the availability of this material at NARA, call 202–741–6030 or go to *http://www.archives.gov/federal_register/code_of_federal_regulations/ibr_locations.html.* Also, this material is available for inspection at U.S. Department of Energy, Office of Energy Efficiency and Renewable Energy, Building Technologies Program, 6th Floor, 950 L'Enfant Plaza, SW., Washington, DC 20024, 202–586–2945, or go to: *http://www1.eere.energy.gov/buildings/appliance_standards/.* Standards can be obtained from the sources listed below.

(b) *ANSI.* American National Standards Institute, 25 W. 43rd Street, 4th Floor, New York, NY 10036, 212–642–4900, or go to *http://www.ansi.org:*

(1) ANSI /AHAM HRF–1–2004, *Energy, Performance and Capacity of Household Refrigerators, Refrigerator-Freezers and Freezers*, approved July 7, 2004, IBR approved for § 431.64 and appendices A and B to subpart C to part 431.

(2) AHAM HRF–1–2008 (''HRF–1–2008''), Association of Home Appliance Manufacturers, *Energy and Internal Volume of Refrigerating Appliances* (2008) including *Errata to Energy and Internal Volume of Refrigerating Appliances*, Correction Sheet issued November 17, 2009, IBR approved for § 431.64 and appendices A and B to subpart C to part 431.

(c) AHRI. Air-Conditioning, Heating, and Refrigeration Institute, 2111 Wilson Blvd., Suite 500, Arlington, VA

22201, (703) 524–8800, *ahri@ahrinet.org*, or *http://www.ahrinet.org/Content/StandardsProgram_20.aspx*.

(1) ARI Standard 1200–2006, *Performance Rating of Commercial Refrigerated Display Merchandisers and Storage Cabinets*, 2006, IBR approved for §§ 431.64 and 431.66, and appendices A and B to subpart C of part 431.

(2) AHRI Standard 1200 (I–P)–2010 (''AHRI Standard 1200 (I–P)–2010''), *2010 Standard for Performance Rating of Commercial Refrigerated Display Merchandisers and Storage Cabinets*, 2010, IBR approved for §§ 431.64 and 431.66, and appendices A and B to subpart C of part 431.

(d) *ASHRAE*. The American Society of Heating, Refrigerating, and Air-Conditioning Engineers, Inc., 1971 Tullie Circle NE., Atlanta, GA 30329, or *http://www.ashrae.org/*.

(1) ANSI/ASHRAE Standard 72–2005, (ASHRAE 72–2005), ''Method of Testing Commercial Refrigerators and Freezers,'' Copyright 2005, IBR approved for § 431.62, and appendices A and B to subpart C of part 431.

(2) [Reserved]

(e) *ASTM*. ASTM International, 100 Barr Harbor Drive, P.O. Box C700, West Conshohocken, PA 19428, (877) 909–2786, or go to *http://www.astm.org/*.

(1) ASTM E 1084 (Reapproved 2009), ''Standard Test Method for Solar Transmittance (Terrestrial) of Sheet Materials Using Sunlight,'' approved April 1, 2009, IBR approved for § 431.62.

(2) [Reserved]

[74 FR 1139, Jan. 9, 2009, as amended at 77 FR 10318, Feb. 21, 2012; 78 FR 62993, Oct. 23, 2013; 79 FR 22308, Apr. 21, 2014]

§ 431.64 Uniform test method for the measurement of energy consumption of commercial refrigerators, freezers, and refrigerator-freezers.

(a) *Scope*. This section provides the test procedures for measuring, pursuant to EPCA, the daily energy consumption in kilowatt hours per day (kWh/day) for a given product category and volume or total display area of commercial refrigerators, freezers, and refrigerator-freezers.

(b) *Testing and calculations*. Determine the daily energy consumption of each covered commercial refrigerator, freezer, or refrigerator-freezer by conducting the appropriate test procedure set forth below, in appendix A or B to this subpart. The daily energy consumption of commercial refrigeration equipment shall be calculated using raw measured values and the final test results shall be reported in increments of 0.01 kWh/day.

[70 FR 60414, Oct. 18, 2005, as amended at 77 FR 10318, Feb. 21, 2012; 79 FR 22308, Apr. 21, 2014]

ENERGY CONSERVATION STANDARDS

§ 431.66 Energy conservation standards and their effective dates.

(a) In this section—

(1) The term ''AV'' means the adjusted volume (ft^3) (defined as 1.63 × frozen temperature compartment volume (ft^3) + chilled temperature compartment volume (ft^3)) with compartment volumes measured in accordance with the Association of Home Appliance Manufacturers Standard HRF1–1979.

(2) The term ''V'' means the chilled or frozen compartment volume (ft^3) (as defined in the Association of Home Appliance Manufacturers Standard HRF1–1979).

(3) For the purpose of paragraph (d) of this section, the term ''TDA'' means the total display area (ft^2) of the case, as defined in ARI Standard 1200–2006, appendix D (incorporated by reference, see § 431.63). For the purpose of paragraph (e) of this section, the term ''TDA'' means the total display area (ft^2) of the case, as defined in AHRI Standard 1200 (I–P)–2010, appendix D (incorporated by reference, see § 431.63).

(b)(1) Each commercial refrigerator, freezer, and refrigerator-freezer with a self-contained condensing unit designed for holding temperature applications manufactured on or after January 1, 2010 and before March 27, 2017 shall have a daily energy consumption (in kilowatt-hours per day) that does not exceed the following:

Category	Maximum daily energy consumption (kilowatt hours per day)
Refrigerators with solid doors	0.10V + 2.04.
Refrigerators with transparent doors.	0.12V + 3.34.
Freezers with solid doors	0.40V + 1.38.
Freezers with transparent doors.	0.75V + 4.10.

Category	Maximum daily energy consumption (kilowatt hours per day)
Refrigerator/freezers with solid doors.	the greater of 0.27AV–0.71 or 0.70.

(2) Each service over the counter, self-contained, medium temperature commercial refrigerator (SOC–SC–M) manufactured on or after January 1, 2012, shall have a total daily energy consumption (in kilowatt hours per day) of not more than 0.6 × TDA + 1.0. As used in the preceding sentence, ''TDA'' means the total display area (ft^2) of the case, as defined in the AHRI Standard 1200 (I–P)–2010, appendix D (incorporated by reference, see § 431.63).

(c) Each commercial refrigerator with a self-contained condensing unit designed for pull-down temperature applications and transparent doors manufactured on or after January 1, 2010 and before March 27, 2017 shall have a daily energy consumption (in kilowatt-hours per day) of not more than 0.126V + 3.51.

(d) Each commercial refrigerator, freezer, and refrigerator-freezer with a self-contained condensing unit and without doors; commercial refrigerator, freezer, and refrigerator-freezer with a remote condensing unit; and commercial ice-cream freezer manufactured on or after January 1, 2012 and before March 27, 2017 shall have a daily energy consumption (in kilowatt-hours per day) that does not exceed the levels specified:

(1) For equipment other than hybrid equipment, refrigerator-freezers or wedge cases:

Equipment category	Condensing unit configuration	Equipment family	Rating temp. (°F)	Operating temp. (°F)	Equipment class designation*	Maximum daily energy consumption (kWh/day)
Remote Condensing Commercial Refrigerators and Commercial Freezers.	Remote (RC)	Vertical Open (VOP).	38 (M)	≥32±2	VOP.RC.M ..	0.82 × TDA + 4.07
			0 (L)	<32±2	VOP.RC.L ...	2.27 × TDA + 6.85
		Semivertical Open (SVO).	38 (M)	≥32±2	SVO.RC.M ..	0.83 × TDA + 3.18
			0 (L)	<32±2	SVO.RC.L ...	2.27 × TDA + 6.85
		Horizontal Open (HZO).	38 (M)	≥32±2	HZO.RC.M ..	0.35 × TDA + 2.88
			0 (L)	<32±2	HZO.RC.L ...	0.57 × TDA + 6.88
		Vertical Closed Transparent (VCT).	38 (M)	≥32±2	VCT.RC.M ..	0.22 × TDA + 1.95
			0 (L)	<32±2	VCT.RC.L ...	0.56 × TDA + 2.61
		Horizontal Closed Transparent (HCT).	38 (M)	≥32±2	HCT.RC.M ..	0.16 × TDA + 0.13
			0 (L)	<32±2	HCT.RC.L ...	0.34 × TDA + 0.26
		Vertical Closed Solid (VCS).	38 (M)	≥32±2	VCS.RC.M ..	0.11 × V + 0.26
			0 (L)	<32±2	VCS.RC.L ...	0.23 × V + 0.54
		Horizontal Closed Solid (HCS).	38 (M)	≥32±2	HCS.RC.M ..	0.11 × V + 0.26
			0 (L)	<32±2	HCS.RC.L ...	0.23 × V + 0.54
		Service Over Counter (SOC).	38 (M)	≥32±2	SOC.RC.M ..	0.51 × TDA + 0.11
			0 (L)	<32±2	SOC.RC.L ...	1.08 × TDA + 0.22
Self-Contained Commercial Refrigerators and Commercial Freezers without Doors.	Self-Contained (SC).	Vertical Open (VOP).	38 (M)	≥32±2	VOP.SC.M ..	1.74 × TDA + 4.71
			0 (L)	<32±2	VOP.SC.L ...	4.37 × TDA + 11.82
		Semivertical Open (SVO).	38 (M)	≥32±2	SVO.SC.M ..	1.73 × TDA + 4.59
			0 (L)	<32±2	SVO.SC.L ...	4.34 × TDA + 11.51
		Horizontal Open ...	38 (M)	≥32±2	HZO.SC.M ..	0.77 × TDA + 5.55
			0 (L)	<32±2	HZO.SC.L ...	1.92 × TDA + 7.08
Commercial Ice-Cream Freezers.	Remote (RC)	Vertical Open (VOP).	−15 (I)	≤−5±2**	VOP.RC.I	2.89 × TDA + 8.7
		Semivertical Open (SVO).			SVO.RC.I	2.89 × TDA + 8.7
		Horizontal Open (HZO).			HZO.RC.I	0.72 × TDA + 8.74
		Vertical Closed Transparent (VCT).			VCT.RC.I	0.66 × TDA + 3.05
		Horizontal Closed Transparent (HCT).			HCT.RC.I	0.4 × TDA + 0.31
		Vertical Closed Solid (VCS).			VCS.RC.I	0.27 × V + 0.63
		Horizontal Closed Solid (HCS).			HCS.RC.I	0.27 × V + 0.63

Equipment category	Condensing unit configuration	Equipment family	Rating temp. (°F)	Operating temp. (°F)	Equipment class designation*	Maximum daily energy consumption (kWh/day)
	Self-Contained (SC).	Service Over Counter (SVO).			SOC.RC.I	1.26 × TDA + 0.26
		Vertical Open (VOP).			VOP.SC.I	5.55 × TDA + 15.02
		Semivertical Open (SVO).			SVO.SC.I	5.52 × TDA + 14.63
		Horizontal Open (HZO).			HZO.SC.I	2.44 × TDA + 9
		Vertical Closed Transparent (VCT).			VCT.SC.I	0.67 × TDA + 3.29
		Horizontal Closed Transparent (HCT).			HCT.SC.I	0.56 × TDA + 0.43
		Vertical Closed Solid (VCS).			VCS.SC.I	0.38 × V + 0.88
		Horizontal Closed Solid (HCS).			HCS.SC.I	0.38 × V + 0.88
		Service Over Counter (SVO).			SOC.SC.I	1.76 × TDA + 0.36

*The meaning of the letters in this column is indicated in the three columns to the left.
**Ice-cream freezer is defined in 10 CFR 431.62 as a commercial freezer that is designed to operate at or below −5 °F (−21 °C) and that the manufacturer designs, markets, or intends for the storing, displaying, or dispensing of ice cream.

(2) For commercial refrigeration equipment with two or more compartments (*i.e.*, hybrid refrigerators, hybrid freezers, hybrid refrigerator-freezers, and non-hybrid refrigerator-freezers), the maximum daily energy consumption (MDEC) for each model shall be the sum of the MDEC values for all of its compartments. For each compartment, measure the TDA or volume of that compartment, and determine the appropriate equipment class based on that compartment's equipment family, condensing unit configuration, and designed operating temperature. The MDEC limit for each compartment shall be the calculated value obtained by entering that compartment's TDA or volume into the standard equation in paragraph (d)(1) of this section for that compartment's equipment class. Measure the calculated daily energy consumption (CDEC) or total daily energy consumption (TDEC) for the entire case:

(i) For remote condensing commercial hybrid refrigerators, hybrid freezers, hybrid refrigerator-freezers, and non-hybrid refrigerator-freezers, where two or more independent condensing units each separately cool only one compartment, measure the total refrigeration load of each compartment separately according to the ARI Standard 1200–2006 test procedure (incorporated by reference, see § 431.63). Calculate compressor energy consumption (CEC) for each compartment using Table 1 in ARI Standard 1200–2006 using the saturated evaporator temperature for that compartment. The CDEC for the entire case shall be the sum of the CEC for each compartment, fan energy consumption (FEC), lighting energy consumption (LEC), anti-condensate energy consumption (AEC), defrost energy consumption (DEC), and condensate evaporator pan energy consumption (PEC) (as measured in ARI Standard 1200–2006).

(ii) For remote condensing commercial hybrid refrigerators, hybrid freezers, hybrid refrigerator-freezers, and non-hybrid refrigerator-freezers, where two or more compartments are cooled collectively by one condensing unit, measure the total refrigeration load of the entire case according to the ARI Standard 1200–2006 test procedure (incorporated by reference, see § 431.63). Calculate a weighted saturated evaporator temperature for the entire case by:

(A) Multiplying the saturated evaporator temperature of each compartment by the volume of that compartment (as measured in ARI Standard 1200–2006),

(B) Summing the resulting values for all compartments, and

(C) Dividing the resulting total by the total volume of all compartments.

Calculate the CEC for the entire case using Table 1 in ARI Standard 1200–2006 (incorporated by reference, see § 431.63), using the total refrigeration load and the weighted average saturated evaporator temperature. The CDEC for the entire case shall be the sum of the CEC, FEC, LEC, AEC, DEC, and PEC.

(iii) For self-contained commercial hybrid refrigerators, hybrid freezers, hybrid refrigerator-freezers, and non-hybrid refrigerator-freezers, measure the TDEC for the entire case according to the ARI Standard 1200–2006 test procedure (incorporated by reference, see § 431.63).

(3) For remote-condensing and self-contained wedge cases, measure the CDEC or TDEC according to the ARI Standard 1200–2006 test procedure (incorporated by reference, see § 431.63). The MDEC for each model shall be the amount derived by incorporating into the standards equation in paragraph (d)(1) of this section for the appropriate equipment class a value for the TDA that is the product of:

(i) The vertical height of the air-curtain (or glass in a transparent door) and (ii) The largest overall width of the case, when viewed from the front.

(e) Each commercial refrigerator, freezer, and refrigerator-freezer with a self-contained condensing unit designed for holding temperature applications and with solid or transparent doors; commercial refrigerator with a self-contained condensing unit designed for pull-down temperature applications and with transparent doors; commercial refrigerator, freezer, and refrigerator-freezer with a self-contained condensing unit and without doors; commercial refrigerator, freezer, and refrigerator-freezer with a remote condensing unit; and commercial ice-cream freezer manufactured on or after March 27, 2017, shall have a daily energy consumption (in kilowatt-hours per day) that does not exceed the levels specified:

(1) For equipment other than hybrid equipment, refrigerator/freezers, or wedge cases:

Equipment category	Condensing unit configuration	Equipment family	Rating temp. deg;F	Operating temp. deg;F	Equipment class designation *	Maximum daily energy consumption kWh/day
Remote Condensing Commercial Refrigerators and Commercial Freezers.	Remote (RC)	Vertical Open (VOP).	38 (M)	≥32	VOP.RC.M ..	0.64 × TDA + 4.07.
			0 (L)	<32	VOP.RC.L ...	2.2 × TDA + 6.85.
		Semivertical Open (SVO).	38 (M)	≥32	SVO.RC.M ..	0.66 × TDA + 3.18.
			0 (L)	<32	SVO.RC.L ...	2.2 × TDA + 6.85.
		Horizontal Open (HZO).	38 (M)	≥32	HZO.RC.M ..	0.35 × TDA + 2.88.
			0 (L)	<32	HZO.RC.L ...	0.55 × TDA + 6.88.
		Vertical Closed Transparent (VCT).	38 (M)	≥32	VCT.RC.M ..	0.15 × TDA + 1.95.
			0 (L)	<32	VCT.RC.L ...	0.49 × TDA + 2.61.
		Horizontal Closed Transparent (HCT).	38 (M)	≥32	HCT.RC.M ..	0.16 × TDA + 0.13.
			0 (L)	<32	HCT.RC.L ...	0.34 × TDA + 0.26.
		Vertical Closed Solid (VCS).	38 (M)	≥32	VCS.RC.M ..	0.1 × V + 0.26.
			0 (L)	<32	VCS.RC.L ...	0.21 × V + 0.54.
		Horizontal Closed Solid (HCS).	38 (M)	≥32	HCS.RC.M ..	0.1 × V + 0.26.
			0 (L)	<32	HCS.RC.L ...	0.21 × V + 0.54.
		Service Over Counter (SOC).	38 (M)	≥32	SOC.RC.M ..	0.44 × TDA + 0.11.
			0 (L)	<32	SOC.RC.L ...	0.93 × TDA + 0.22.
Self-Contained Commercial Refrigerators and Commercial Freezers Without Doors.	Self-Contained (SC).	Vertical Open (VOP).	38 (M)	≥32	VOP.SC.M ..	1.69 × TDA + 4.71.
			0 (L)	<32	VOP.SC.L ...	4.25 × TDA + 11.82.
		Semivertical Open (SVO).	38 (M)	≥32	SVO.SC.M ..	1.7 × TDA + 4.59.

Equipment category	Condensing unit configuration	Equipment family	Rating temp. deg;F	Operating temp. deg;F	Equipment class designation *	Maximum daily energy consumption kWh/day
Self-Contained Commercial Refrigerators and Commercial Freezers With Doors.	Self-Contained (SC).	Horizontal Open (HZO).	0 (L)	<32	SVO.SC.L ...	4.26 × TDA + 11.51.
			38 (M)	≥32	HZO.SC.M ..	0.72 × TDA + 5.55.
		Vertical Closed Transparent (VCT).	0 (L)	<32	HZO.SC.L ...	1.9 × TDA + 7.08.
			38 (M)	≥32	VCT.SC.M ..	0.1 × V + 0.86.
		Vertical Closed Solid (VCS).	0 (L)	<32	VCT.SC.L ...	0.29 × V + 2.95.
			38 (M)	≥32	VCS.SC.M ..	0.05 × V + 1.36.
		Horizontal Closed Transparent (HCT).		<32	VCS.SC.L ...	0.22 × V + 1.38.
			38 (M)	≥32	HCT.SC.M ..	0.06 × V + 0.37.
		Horizontal Closed Solid (HCS).	0 (L)	<32	HCT.SC.L ...	0.08 × V + 1.23.
				≥32	HCS.SC.M ..	0.05 × V + 0.91.
		Service Over Counter (SOC).	0 (L)	<32	HCS.SC.L ...	0.06 × V + 1.12.
				≥32	SOC.SC.M ..	0.52 × TDA + 1.
Self-Contained Commercial Refrigerators with Transparent Doors for Pull-Down Temperature Applications.	Self-Contained (SC).	Pull-Down (PD)	0 (L)	<32	SOC.SC.L ...	1.1 × TDA + 2.1.
			38 (M)	≥32	PD.SC.M	0.11 × V + 0.81.
Commercial Ice-Cream Freezers.	Remote (RC)	Vertical Open (VOP).	−15 (I)	≤−5**	VOP.RC.I	2.79 × TDA + 8.7.
		Semivertical Open (SVO).			SVO.RC.I	2.79 × TDA + 8.7.
		Horizontal Open (HZO).			HZO.RC.I	0.7 × TDA + 8.74.
		Vertical Closed Transparent (VCT).			VCT.RC.I	0.58 × TDA + 3.05.
		Horizontal Closed Transparent (HCT).			HCT.RC.I	0.4 × TDA + 0.31.
		Vertical Closed Solid (VCS).			VCS.RC.I	0.25 × V + 0.63.
		Horizontal Closed Solid (HCS).			HCS.RC.I	0.25 × V + 0.63.
		Service Over Counter (SOC).			SOC.RC.I	1.09 × TDA + 0.26.
	Self-Contained (SC).	Vertical Open (VOP).			VOP.SC.I	5.4 × TDA + 15.02.
		Semivertical Open (SVO).			SVO.SC.I	5.41 × TDA + 14.63.
		Horizontal Open (HZO).			HZO.SC.I	2.42 × TDA + 9.
		Vertical Closed Transparent (VCT).			VCT.SC.I	0.62 × TDA + 3.29.
		Horizontal Closed Transparent (HCT).			HCT.SC.I	0.56 × TDA + 0.43.
		Vertical Closed Solid (VCS).			VCS.SC.I	0.34 × V + 0.88.
		Horizontal Closed Solid (HCS).			HCS.SC.I	0.34 × V + 0.88.
		Service Over Counter (SOC).			SOC.SC.I	1.53 × TDA + 0.36.

* The meaning of the letters in this column is indicated in the columns to the left.
** Ice-cream freezer is defined in 10 CFR 431.62 as a commercial freezer that is designed to operate at or below −5 °F *(−21 °C) and that the manufacturer designs, markets, or intends for the storing, displaying, or dispensing of ice cream.

(2) For commercial refrigeration equipment with two or more compartments (*i.e.*, hybrid refrigerators, hybrid freezers, hybrid refrigerator-freezers, and non-hybrid refrigerator-freezers), the maximum daily energy consumption for each model shall be the sum of the MDEC values for all of its compartments. For each compartment, measure the TDA or volume of that compartment, and determine the appropriate equipment class based on that compartment's equipment family, condensing unit configuration, and designed operating temperature. The MDEC limit for each compartment shall be the calculated value obtained by entering that compartment's TDA or volume into the standard equation in paragraph (e)(1) of this section for that compartment's equipment class. Measure the CDEC or TDEC for the entire case as described in § 431.66(d)(2)(i) through (iii), except that where measurements and calculations reference ARI Standard 1200–2006 (incorporated by reference, see § 431.63), AHRI Standard 1200 (I–P)–2010 (incorporated by reference, see § 431.63) shall be used.

(3) For remote condensing and self-contained wedge cases, measure the CDEC or TDEC according to the AHRI Standard 1200 (I–P)–2010 test procedure (incorporated by reference, see § 431.63). For wedge cases in equipment classes for which a volume metric is used, the MDEC shall be the amount derived from the appropriate standards equation in paragraph (e)(1) of this section. For wedge cases of equipment classes for which a TDA metric is used, the MDEC for each model shall be the amount derived by incorporating into the standards equation in paragraph (e)(1) of this section for the equipment class a value for the TDA that is the product of:

(i) The vertical height of the air curtain (or glass in a transparent door) and

(ii) The largest overall width of the case, when viewed from the front.

(f) *Exclusions*. The energy conservation standards in paragraphs (b) through (e) of this section do not apply to salad bars, buffet tables, and chef bases or griddle stands.

[70 FR 60414, Oct. 18, 2005, as amended at 74 FR 1140, Jan. 9, 2009; 78 FR 62993, Oct. 23, 2013; 79 FR 22308, Apr. 21, 2014; 79 FR 17816, Mar. 28, 2014]

APPENDIX A TO SUBPART C OF PART 431—UNIFORM TEST METHOD FOR THE MEASUREMENT OF ENERGY CONSUMPTION OF COMMERCIAL REFRIGERATORS, FREEZERS, AND REFRIGERATOR-FREEZERS

NOTE: After October 20, 2014 but before March 28, 2017, any representations made with respect to the energy use or efficiency of commercial refrigeration equipment must be made in accordance with the results of testing pursuant to this appendix.

Manufacturers conducting tests of commercial refrigeration equipment after May 21, 2014 and prior to October 20, 2014, must conduct such test in accordance with either this appendix or § 431.64 as it appeared at 10 CFR part 430, subpart B, in the 10 CFR parts 200 to 499 edition revised as of January 1, 2014. Any representations made with respect to the energy use or efficiency of such commercial refrigeration equipment must be in accordance with whichever version is selected. Given that after October 20, 2014 representations with respect to the energy use or efficiency of commercial refrigeration equipment must be made in accordance with tests conducted pursuant to this appendix, manufacturers may wish to begin using this test procedure as soon as possible.

1. Test Procedure

1.1. Determination of Daily Energy Consumption. Determine the daily energy consumption of each covered commercial refrigerator, freezer, refrigerator-freezer or ice-cream freezer by conducting the test procedure set forth in the Air-Conditioning and Refrigeration Institute (ARI) Standard 1200–2006, ''Performance Rating of Commercial Refrigerated Display Merchandisers and Storage Cabinets,'' section 3, ''Definitions,'' section 4, ''Test Requirements,'' and section 7, ''Symbols and Subscripts'' (incorporated by reference, see § 431.63). For each commercial refrigerator, freezer, or refrigerator-freezer with a self-contained condensing unit, also use ARI Standard 1200–2006, section 6, ''Rating Requirements for Self-contained Commercial Refrigerated Display Merchandisers and Storage Cabinets.'' For each commercial refrigerator, freezer, or refrigerator-freezer with a remote condensing unit, also use ARI Standard 1200–2006, section 5, ''Rating Requirements for Remote Commercial Refrigerated Display Merchandisers and Storage Cabinets.''

1.2. Methodology for Determining Applicability of Transparent Door Equipment Families. To determine if a door for a given model of commercial refrigeration equipment is transparent: (1) Calculate the outer door surface area including frames and mullions; (2) calculate the transparent surface area within the outer door surface area excluding frames and mullions; (3) calculate the ratio of (2) to (1) for each of the outer doors; and (4) the ratio for the transparent surface area of all outer doors must be greater than 0.25 to qualify as a transparent equipment family.

1.3. Additional Specifications for Testing of Components and Accessories. Subject to the provisions regarding specific components and accessories listed below, all standard components that would be used during normal operation of the basic model in the field shall be installed and in operation during testing as recommended by the manufacturer and representative of their typical operation in the field unless such installation and operation is inconsistent with any requirement of the test procedure. The specific components and accessories listed in the subsequent sections shall be operated as stated during the test.

1.3.1. Energy Management Systems. Applicable energy management systems may be activated during the test procedure provided they are permanently installed on the case, configured as sold and in such a manner so as to operate automatically without the intervention of the operator, and do not conflict with any of other requirements for a valid test as specified in this appendix.

1.3.2. Lighting. Energize all lighting, except customer display signs/lights as described in section 1.3.3 and UV lighting as described in section 1.3.6 of this appendix, to the maximum illumination level for the duration of testing. However, if a closed solid unit of commercial refrigeration equipment includes an automatic lighting control system that can turn off internal case lighting when the door is closed, and the manufacturer recommends the use of this system in writing in the product literature delivered with the unit, then the lighting control should be operated in the automatic setting, even if the model has a manual switch that disables the automatic lighting control.

1.3.3. Customer display signs/lights. Do not energize supplemental lighting that exists solely for the purposes of advertising or drawing attention to the case and is not integral to the operation of the case.

1.3.4. Condensate pan heaters and pumps. For self-contained equipment only, all electric resistance condensate heaters and condensate pumps must be installed and operational during the test. This includes the stabilization period (including pull-down), steady-state, and performance testing periods. Prior to the start of the stabilization period as defined by ASHRAE 72–2005 (incorporated by reference, see §431.63), the condensate pan must be dry. Following the start of the stabilization period, allow any condensate moisture generated to accumulate in the pan. Do not manually add or remove water from the condensate pan at any time during the test.

1.3.5. Anti-sweat door heaters. Anti-sweat door heaters must be in operation during the entirety of the test procedure. Models with a user-selectable setting must have the heaters energized and set to the maximum usage position. Models featuring an automatic, non-user-adjustable controller that turns on or off based on environmental conditions must be operating in the automatic state. If a unit is not shipped with a controller from the point of manufacture and is intended to be used with an automatic, non-user-adjustable controller, test the unit with a manufacturer-recommended controller that turns on or off based on environmental conditions.

1.3.6. Ultraviolet lights. Do not energize ultraviolet lights during the test.

1.3.7. Illuminated temperature displays and alarms. All illuminated temperature displays and alarms shall be energized and operated during the test as they would be during normal field operation.

1.3.8. Condenser filters. Remove any nonpermanent filters that are provided to prevent particulates from blocking a model's condenser coil.

1.3.9. Refrigeration system security covers. Remove any devices used to secure the condensing unit against unwanted removal.

1.3.10. Night curtains and covers. Do not deploy night curtains or covers.

1.3.11. Grill options. Remove any optional, non-standard grills used to direct airflow.

1.3.12. Misting or humidification systems. Misting or humidification systems must be inactive during the test.

1.3.13. Air purifiers. Air purifiers must be inactive during the test.

1.3.14. General purpose outlets. During the test, do not connect any external load to any general purpose outlets contained within a unit.

1.3.15. Crankcase heaters. Crankcase heaters must be operational during the test. If a control system, such as a thermostat or electronic controller, is used to modulate the operation of the crankcase heater, it must be activated during the test.

1.3.16. Drawers. Drawers are to be treated as identical to doors when conducting the DOE test procedure. Commercial refrigeration equipment with drawers should be configured with the drawer pans that allow for the maximum packing of test simulators and filler packages without the filler packages and test simulators exceeding 90 percent of

the refrigerated volume. Packing of test simulators and filler packages shall be in accordance with the requirements for commercial refrigerators without shelves, as specified in section 6.2.3 of ASHRAE 72–2005 (incorporated by reference, see § 431.63).

2. Test Conditions

2.1. Integrated Average Temperatures. Conduct the testing required in section 1 and 2 of this appendix A, and determine the daily energy consumption at the applicable integrated average temperature as found in the following table.

Category	Test procedure	Integrated average temperature
(i) Refrigerator with Solid Door(s)	ARI Standard 1200–2006 [1]	38 °F (±2 °F).
(ii) Refrigerator with Transparent Door(s)	ARI Standard 1200–2006 [1]	38 °F (±2 °F).
(iii) Freezer with Solid Door(s)	ARI Standard 1200–2006 [1]	0 °F (±2 °F).
(iv) Freezer with Transparent Door(s)	ARI Standard 1200–2006 [1]	0 °F (±2 °F).
(v) Refrigerator-Freezer with Solid Door(s)	ARI Standard 1200–2006 [1]	38 °F (±2 °F) for refrigerator compartment. 0 °F (±2 °F) for freezer compartment.
(vi) Commercial Refrigerator with a Self-Contained Condensing Unit Designed for Pull-Down Temperature Applications and Transparent Doors.	ARI Standard 1200–2006 [1]	38 °F (±2 °F).
(vii) Ice-Cream Freezer	ARI Standard 1200–2006 [1]	−15.0 °F (±2 °F).
(viii) Commercial Refrigerator, Freezer, and Refrigerator-Freezer with a Self-Contained Condensing Unit and without Doors.	ARI Standard 1200–2006 [1]	(A) 0 °F (±2 °F) for low temperature applications. (B) 38 °F (±2 °F) for medium temperature applications.
(ix) Commercial Refrigerator, Freezer, and Refrigerator-Freezer with a Remote Condensing Unit.	ARI Standard 1200–2006 [1]	(A) 0 °F (±2 °F) for low temperature applications. (B) 38 °F (±2 °F) for medium temperature applications.

[1] Incorporated by reference, see § 431.63.

2.2. Lowest Application Product Temperature. If a unit of commercial refrigeration equipment is not able to be operated at the integrated average temperature specified in the table in paragraph 2.1, test the unit at the lowest application product temperature (LAPT), as defined in § 431.62. For units equipped with a thermostat, LAPT is the lowest thermostat setting. For remote condensing equipment without a thermostat or other means of controlling temperature at the case, the lowest application product temperature is the temperature achieved with the dew point temperature (as defined in AHRI Standard 1200 (I–P)-2010 (incorporated by reference see § 431.63)) set to 5 degrees colder than that required to maintain the manufacturer's lowest specified operating temperature.

2.3. Testing at NSF Test Conditions. For commercial refrigeration equipment that is also tested in accordance with NSF test procedures (Type I and Type II), integrated average temperatures and ambient conditions used for NSF testing may be used in place of the DOE-prescribed integrated average temperatures and ambient conditions provided they result in a more stringent test. That is, the measured daily energy consumption of the same unit, when tested at the rating temperatures and/or ambient conditions specified in the DOE test procedure, must be lower than or equal to the measured daily energy consumption of the unit when tested with the rating temperatures or ambient conditions used for NSF testing. The integrated average temperature measured during the test may be lower than the range specified by the DOE applicable temperature specification provided in paragraph 2.1 of this appendix, but may not exceed the upper value of the specified range. Ambient temperatures and/or humidity values may be higher than those specified in the DOE test procedure.

3. Volume and Total Display Area

3.1. Determination of Volume. Determine the volume of a commercial refrigerator, freezer, refrigerator-freezer, or ice-cream freezer using the method set forth in the ANSI/AHAM HRF–1–2004, ''Energy, Performance and Capacity of Household Refrigerators, Refrigerator-Freezers and Freezers'' (incorporated by reference, see § 431.63), section 3.21, ''Volume,'' sections 4.1 through 4.3, ''Method for Computing Total Refrigerated Volume and Total Shelf Area of Household Refrigerators and Household Wine Chillers,'' and sections 5.1 through 5.3, ''Method for Computing Total Refrigerated Volume and Total Shelf Area of Household Freezers.''

3.2. Determination of Total Display Area. Determine the total display area of a commercial refrigerator, freezer, refrigerator-freezer, or ice-cream freezer using the method set forth in ARI Standard 1200–2006 (incorporated by reference, see § 431.63), but disregarding the specification that ''transparent material (≥65% light transmittance) in Appendix D. Specifically, total display

area shall be the sum of the projected area(s) of visible product, expressed in ft^2 (*i.e.*, portions through which product can be viewed from an angle normal, or perpendicular, to the transparent area). Determine L as the interior length of the CRE model, provided no more than 10 percent of that length consists of non-transparent material. For those cases with greater than 10 percent of non-transparent area, L shall be determined as the projected linear dimension(s) of visible product plus 10 percent of non-transparent area.

See Figures A3.1, A3.2, A3.3, A3.4, and A3.5 as examples of how to calculate the dimensions associated with calculation of total display area. In the diagrams, D_h and L represent the dimensions of the projected visible product.

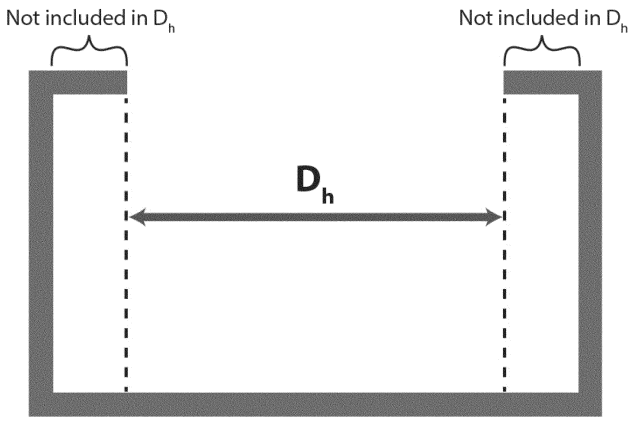

Figure A3.1 Horizontal open display case, where the distance "D_h" is the dimension of the projected visible product.

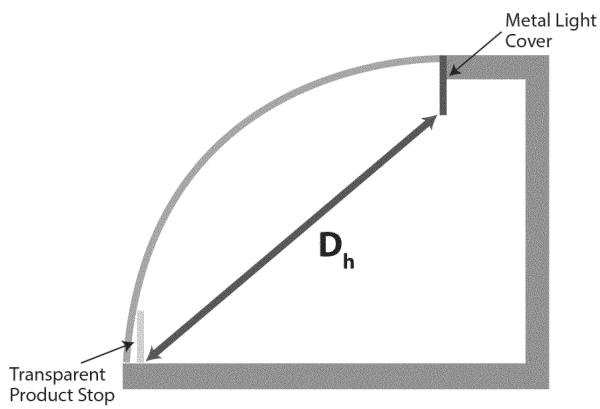

Figure A3.2 Service over counter display case, the distance "D_h" is the dimension of the projected visible product, that being the dimension transverse to the length of the case through which product can be viewed, excluding areas of the product zone that cannot be viewed as part of a direct projection through the glass front.

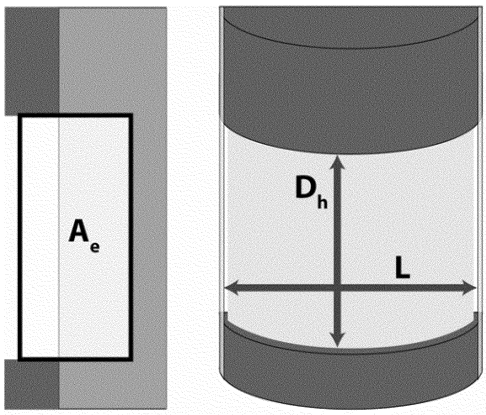

Figure A3.3 Radius case, where the distances "D_h" and "L," and the area "A_e," are representative of the planar projections of visible product when viewed at an angle normal to the transparent surface or opening.

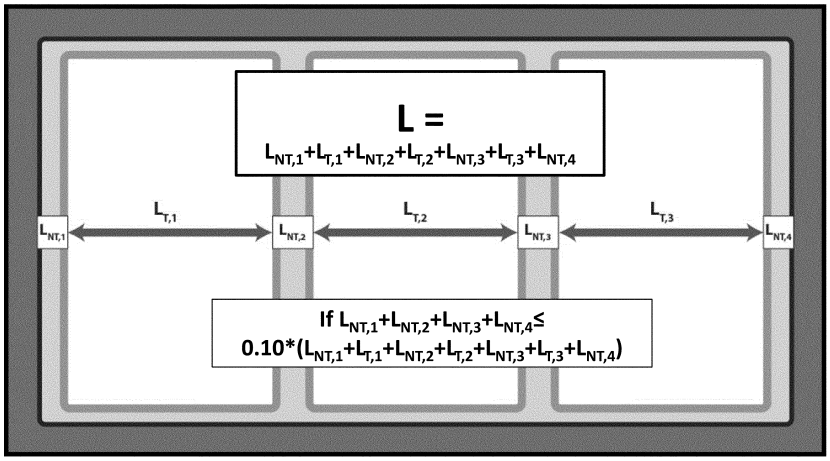

Figure A3.4 Three-door vertical closed transparent display case, where the distance "L" is the collective length of portions of the merchandiser through which product can be seen, including the linear dimension of transparent ($L_{T,i}$) and non-transparent ($L_{NT,i}$) areas, provided the total linear dimension of non-transparent areas are less than 5 inches.

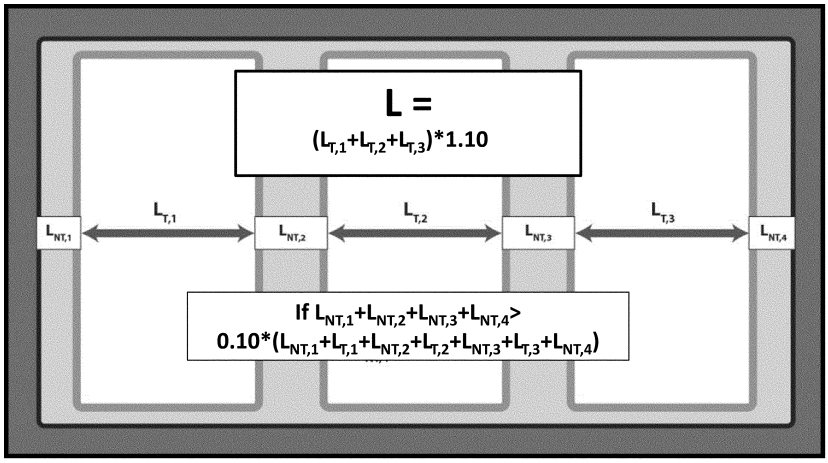

Figure A3.5 Three-door vertical closed transparent display case, where the distance "L" is the collective length of portions of the merchandiser through which product can be seen, including the linear dimension of transparent ($L_{T,i}$) and non-transparent ($L_{NT,i}$) areas, and the total linear dimension of non-transparent areas is greater than 5 inches.

[79 FR 22308, Apr. 21, 2014]

APPENDIX B TO SUBPART C OF PART 431—AMENDED UNIFORM TEST METHOD FOR THE MEASUREMENT OF ENERGY CONSUMPTION OF COMMERCIAL REFRIGERATORS, FREEZERS, AND REFRIGERATOR-FREEZERS

NOTE: Any representations made on or after March 28, 2017, with respect to the energy use or efficiency of commercial refrigeration equipment must be made in accordance with the results of testing pursuant to this appendix.

1. Test Procedure

1.1. Determination of Daily Energy Consumption. Determine the daily energy consumption of each covered commercial refrigerator, freezer, refrigerator-freezer or ice-cream freezer by conducting the test procedure set forth in the AHRI Standard 1200 (I–P)–2010, section 3, ''Definitions,'' section 4, ''Test Requirements,'' and section 7, ''Symbols and Subscripts'' (incorporated by reference, see §431.63). For each commercial refrigerator, freezer, or refrigerator-freezer with a self-contained condensing unit, also use AHRI Standard 1200 (I–P)–2010, section 6, ''Rating Requirements for Self-contained Commercial Refrigerated Display Merchandisers and Storage Cabinets.'' For each commercial refrigerator, freezer, or refrigerator-freezer with a remote condensing unit, also use AHRI Standard 1200 (I–P)-2010, section 5, ''Rating Requirements for Remote Commercial Refrigerated Display Merchandisers and Storage Cabinets.''

1.2. Methodology for Determining Applicability of Transparent Door Equipment Families

To determine if a door for a given model of commercial refrigeration equipment is transparent: (1) Calculate the outer door surface area including frames and mullions; (2) calculate the transparent surface area within the outer door surface area excluding frames and mullions; (3) calculate the ratio of (2) to (1) for each of the outer doors; and (4) the ratio for the transparent surface area of all outer doors must be greater than 0.25 to qualify as a transparent equipment family.

1.3. Additional Specifications for Testing of Components and Accessories. All standard components that would be used during normal operation of the basic model in the field shall be installed and used during testing as

recommended by the manufacturer and representative of their typical operation in the field unless such installation and operation is inconsistent with any requirement of the test procedure. The specific components and accessories listed in the subsequent sections shall be operated as stated during the test.

1.3.1. Energy Management Systems. Applicable energy management systems may be activated during the test procedure provided they are permanently installed on the case, configured and sold in such a manner so as to operate automatically without the intervention of the operator, and do not conflict with any of other requirements for a valid test as specified in this appendix.

1.3.2. Lighting. All lighting except for customer display signs/lights as described in section 1.3.3 and UV lighting as described in section 1.3.6 of this appendix shall be energized to the maximum illumination level for the duration of testing for commercial refrigeration equipment with lighting except when the unit is equipped with lighting occupancy sensors and controls. If the unit includes an automatic lighting control system, it should be enabled during test. If the unit is equipped with lighting occupancy sensors and controls in should be tested in accordance with section 1.3.2.1 of this appendix.

1.3.2.1. Lighting Occupancy Sensors and Controls. For units with lighting occupancy sensors and/or scheduled lighting controls installed on the unit, determine the effect of the controls/sensors on daily energy consumption by either a physical test or a calculation method and using the variables that are defined as:

CEC_A is the alternate compressor energy consumption (kilowatt-hours);

LEC_{sc} is the lighting energy consumption of internal case lights with lighting occupancy sensors and controls deployed (kilowatt-hours);

P_{li} is the rated power of lights when they are fully on (watts);

$P_{li(off)}$ is the power of lights when they are off (watts);

$P_{li(dim)}$ is the power of lights when they are dimmed (watts);

$TDEC_o$ is the total daily energy consumption with lights fully on, as measured by AHRI Standard 1200 (I–P)–2010 (kilowatt-hours);

t_{dim} is the time period during which the lights are dimmed due to the use of lighting occupancy sensors or scheduled lighting controls (hours);

$t_{dim,controls}$ is the time case lighting is dimmed due to the use of lighting controls (hours);

$t_{dim,sensors}$ is the time case lighting is dimmed due to the use of lighting occupancy sensors (hours);

t_l is the time period when lights would be on without lighting occupancy sensors and/or scheduled lighting controls (24 hours);

t_{off} is the time period during which the lights are off due to the use of lighting occupancy sensors and/or scheduled lighting controls (hours);

$t_{off,controls}$ is the time case lighting is off due to the use of scheduled lighting controls (hours);

$t_{off,sensors}$ is the time case lighting is off due to the use of lighting occupancy sensors (hours); and

t_{sc} is the time period when lighting is fully on with lighting occupancy sensors and scheduled lighting controls enabled (hours).

1.3.2.1.i. For both a physical test and a calculation method, determine the estimated time off or dimmed, t_{off} or t_{dim}, as the sum of contributions from lighting occupancy sensors and scheduled lighting controls that dim or turn off lighting, respectively, as shown in the following equation:

$$t_{off} = t_{off,sensors} + t_{off,controls}$$
$$t_{dim} = t_{dim,sensors} + t_{dim,controls}$$

The sum of t_{sc}, t_{off}, and t_{dim} should equal 24 hours and the total time period during which the lights are off or dimmed shall not exceed 10.8 hours. For cases with scheduled lighting controls, the time the case lighting is off and/or dimmed due to scheduled lighting controls ($t_{off,controls}$ and/or $t_{dim,controls}$, as applicable) shall not exceed 8 hours. For cases with lighting occupancy sensors installed, the time the case lighting is off and/or dimmed due to lighting occupancy sensors ($t_{off,sensors}$ and/or $t_{dim,sensors}$, as applicable) shall not exceed 10.8 hours. For cases with lighting occupancy sensors and scheduled lighting controls installed, the time the case lighting is off and/or dimmed due to lighting occupancy sensors ($t_{off,sensors}$ and/or $t_{dim,sensors}$, as applicable) shall not exceed 2.8 hours and the time the case lighting is off and/or dimmed due to scheduled lighting controls ($t_{off,controls}$ and/or $t_{dim,controls}$, as applicable) shall not exceed 8 hours.

1.3.2.1.ii. If using a physical test to determine the daily energy consumption, turn off the lights for a time period equivalent to t_{off} and dim the lights for a time period equal to t_{dim}. If night curtains are also being tested on the case, the period of lights off and/or

dimmed shall begin at the same time that the night curtain is being deployed and shall continue consecutively, in that order, for the appropriate number of hours.

1.3.2.1.iii. If using a calculation method to determine the daily energy consumption—

1.3.2.1.iii.A. Calculate the LEC_{sc} using the following equation:

$$LEC_{sc} = \frac{\left((P_{ll} \times t_{sc}) + (P_{ll(off)} \times t_{off}) + (P_{ll(dim)} \times t_{dim})\right)}{(1000)}$$

1.3.2.1.iii.B. Calculate the CEC_A using the following equation:

$$CEC_A = 0.75 \times \frac{3.4121 \times \left(LEC_{sc} - P_{ll} \times {}^{t_l}/_{1000}\right)}{EER}$$

Where EER represents the energy efficiency ratio from Table 1 in AHRI Standard 1200 (I–P)–2010 (incorporated by reference, see §431.63) for remote condensing equipment or the values shown in the following table for self-contained equipment:

EER FOR SELF-CONTAINED COMMERCIAL REFRIGERATED DISPLAY MERCHANDISERS AND STORAGE CABINETS

Operating temperature class	EER *Btu/W*
Medium	11
Low	7
Ice Cream	5

1.3.2.1.iii.C. For remote condensing units, calculate the revised compressor energy consumption (CEC_R) by adding the CEC_A to the compressor energy consumption (CEC) measured in AHRI Standard 1200 (I–P)–2010 (incorporated by reference, see §431.63). The CDEC for the entire case is the sum of the CEC_R and LEC_{sc} (as calculated above) and the fan energy consumption (FEC), anti-condensate energy consumption (AEC), defrost energy consumption (DEC), and condensate evaporator pan energy consumption (PEC) (as measured in AHRI Standard 1200 (I–P)–2010).

1.3.2.1.iii.D. For self-contained units, the TDEC for the entire case is the sum of total daily energy consumption as measured by the AHRI Standard 1200 (I–P)–2010 (incorporated by reference, see §431.63) test with the lights fully on ($TDEC_o$) and CEC_A, less the decrease in lighting energy use due to lighting occupancy sensors and scheduled lighting controls, as shown in following equation.

$$TDEC = TDEC_o + CEC_A - \left({}^{(P_{ll} \times t_l)}/_{1000} - LEC_{sc}\right)$$

1.3.3. Customer display signs/lights. Do not energize supplemental lighting that exists solely for the purposes of advertising or drawing attention to the case and is not integral to the operation of the case.

1.3.4. Condensate pan heaters and pumps. For self-contained equipment only, all electric resistance condensate heaters and condensate pumps must be installed and in operation during the test. This includes the stabilization period (including pull-down), steady-state, and performance testing periods. Prior to the start of the stabilization period as defined by ASHRAE 72–2005 (incorporated by reference, see §431.63), the condensate pan must be dry. Following the start of the stabilization period, allow any condensate moisture generated to accumulate in the pan. Do not manually add or remove water to or from the condensate pan at any time during the test.

1.3.5. Anti-sweat door heaters. Anti-sweat door heaters must be operational during the entirety of the test procedure. Models with a user-selectable setting must have the heaters energized and set to the maximum usage

position. Models featuring an automatic, non-user-adjustable controller that turns on or off based on environmental conditions must be operating in the automatic state. If a unit is not shipped with a controller from the point of manufacture and is intended to be used with an automatic, non-user-adjustable controller, test the unit with a manufacturer-recommended controller that turns on or off based on environmental conditions.

1.3.6. Ultraviolet lights. Do not energize ultraviolet lights during the test.

1.3.7. Illuminated temperature displays and alarms. All illuminated temperature displays and alarms shall be energized and operated during the test as they would be during normal field operation.

1.3.8. Condenser filters. Remove any nonpermanent filters that are provided to prevent particulates from blocking a model's condenser coil.

1.3.9. Refrigeration system security covers. Remove any devices used to secure the condensing unit against unwanted removal.

1.3.10. Night curtains and covers. For display cases sold with night curtains installed, the night curtain shall be employed for 6 hours; beginning 3 hours after the start of the first defrost period. Upon the completion of the 6-hour period, the night curtain shall be raised until the completion of the 24-hour test period.

1.3.11. Grill options. Remove any optional non-standard grills used to direct airflow.

1.3.12. Misting or humidification systems. Misting or humidification systems must be inactive during the test.

1.3.13. Air purifiers. Air purifiers must be inactive during the test.

1.3.14. General purpose outlets. During the test, do not connect any external load to any general purpose outlets contained within a unit.

1.3.15. Crankcase heaters. Crankcase heaters must be operational during the test. If a control system, such as a thermostat or electronic controller, is used to modulate the operation of the crankcase heater, it must be utilized during the test.

1.3.16. Drawers. Drawers are to be treated as identical to doors when conducting the DOE test procedure. Commercial refrigeration equipment with drawers should be configured with the drawer pans that allow for the maximum packing of test simulators and filler packages without the filler packages and test simulators exceeding 90 percent of the refrigerated volume. Packing of test simulators and filler packages shall be in accordance with the requirements for commercial refrigerators without shelves, as specified in section 6.2.3 of ASHRAE 72–2005 (incorporated by reference, see § 431.63).

2. Test Conditions

2.1. Integrated Average Temperatures. Conduct the testing required in section 1 of this appendix B, and determine the daily energy consumption at the applicable integrated average temperature in the following table.

Category	Test procedure	Integrated average temperature
(i) Refrigerator with Solid Door(s)	AHRI Standard 1200 (I–P)–2010 [1]	38 °F (±2 °F).
(ii) Refrigerator with Transparent Door(s)	AHRI Standard 1200 (I–P)–2010 [1]	38 °F (±2 °F).
(iii) Freezer with Solid Door(s)	AHRI Standard 1200 (I–P)–2010 [1]	0 °F (±2 °F).
(iv) Freezer with Transparent Door(s)	AHRI Standard 1200 (I–P)–2010 [1]	0 °F (±2 °F).
(v) Refrigerator-Freezer with Solid Door(s).	AHRI Standard 1200 (I–P)–2010 [1]	38 °F (±2 °F) for refrigerator compartment. 0 °F (±2 °F) for freezer compartment.
(vi) Commercial Refrigerator with a Self-Contained Condensing Unit Designed for Pull-Down Temperature Applications and Transparent Doors.	AHRI Standard 1200 (I–P)–2010 [1]	38 °F (±2 °F).
(vii) Ice-Cream Freezer	AHRI Standard 1200 (I–P)–2010 [1]	−15.0 °F (±2 °F).
(viii) Commercial Refrigerator, Freezer, and Refrigerator-Freezer with a Self-Contained Condensing Unit and without Doors.	AHRI Standard 1200 (I–P)–2010 [1]	(A) 0 °F (±2 °F) for low temperature applications. (B) 38.0 °F (±2 °F) for medium temperature applications.
(ix) Commercial Refrigerator, Freezer, and Refrigerator-Freezer with a Remote Condensing Unit.	AHRI Standard 1200 (I–P)–2010 [1]	(A) 0 °F (±2 °F) for low temperature applications. (B) 38.0 °F (±2 °F) for medium temperature applications.

[1] Incorporated by reference, see § 431.63.

2.2. Lowest Application Product Temperature. If a unit of commercial refrigeration equipment is not able to be operated at the integrated average temperature specified in the table in paragraph 2.1 of this appendix, test the unit at the lowest application product temperature (LAPT), as defined in § 431.62. For units equipped with a thermostat, LAPT is the lowest thermostat setting. For remote condensing equipment without a thermostat or other means of controlling temperature at the case, the lowest application product temperature is the temperature achieved with the dew point temperature (as defined in AHRI Standard 1200 (I–P)–2010 (incorporated by reference, see § 431.63)) set to 5

degrees colder than that required to maintain the manufacturer's lowest specified application temperature.

2.3. Testing at NSF Test Conditions. For commercial refrigeration equipment that is also tested in accordance with NSF test procedures (Type I and Type II), integrated average temperatures and ambient conditions used for NSF testing may be used in place of the DOE-prescribed integrated average temperatures and ambient conditions provided they result in a more stringent test. That is, the measured daily energy consumption of the same unit, when tested at the rating temperatures and/or ambient conditions specified in the DOE test procedure, must be lower than or equal to the measured daily energy consumption of the unit when tested with the rating temperatures or ambient conditions used for NSF testing. The integrated average temperature measured during the test may be lower than the range specified by the DOE applicable temperature specification provided in paragraph 2.1 of this appendix, but may not exceed the upper value of the specified range. Ambient temperatures and/or humidity values may be higher than those specified in the DOE test procedure.

3. Volume and Total Display Area

3.1. Determination of Volume. Determine the volume of a commercial refrigerator, freezer, refrigerator-freezer, or ice-cream freezer using the method set forth in the HRF–1–2008 (incorporated by reference, see §431.63), section 3.30, ''Volume,'' and sections 4.1 through 4.3, ''Method for Computing Refrigerated Volume of Refrigerators, Refrigerator-Freezers, Wine Chillers and Freezers.''

3.2. Determination of Total Display Area. Determine the total display area of a commercial refrigerator, freezer, refrigerator-freezer, or ice-cream freezer using the method set forth in ARI Standard 1200–2006 (incorporated by reference, see §431.63), but disregarding the specification that ''transparent material (≥65% light transmittance) in Appendix D. Specifically, total display area shall be the sum of the projected area(s) of visible product, expressed in ft^2 (*i.e.*, portions through which product can be viewed from an angle normal, or perpendicular, to the transparent area). Determine L as the interior length of the CRE model, provided no more than 5 inches of that length consists of non-transparent material. For those cases with greater than 5 inches of non-transparent area, L shall be determined as the projected linear dimension(s) of visible product plus 5 inches of non-transparent area.

See Figures A3.1, A3.2, and A3.3 as examples of how to calculate the dimensions associated with calculation of total display area. In the diagrams, D_h and L represent the dimensions of the projected visible product.

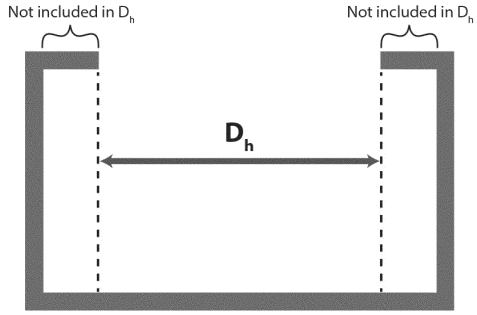

Figure A3.1 Horizontal open display case, where the distance "D_h" is the dimension of the projected visible product.

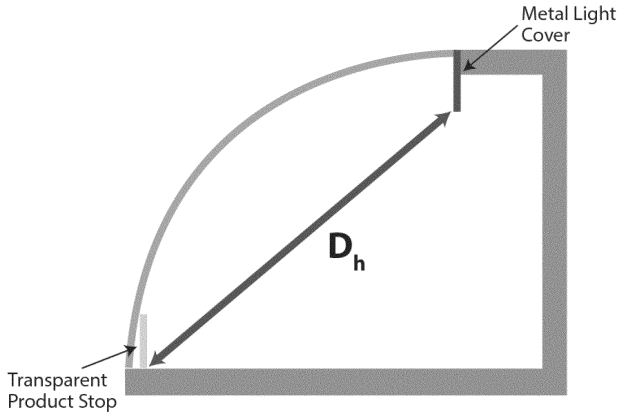

Figure A3.2 Service over counter display case, the distance "D_h" is the dimension of the projected visible product, that being the dimension transverse to the length of the case through which product can be viewed, excluding areas of the product zone that cannot be viewed as part of a direct projection through the glass front.

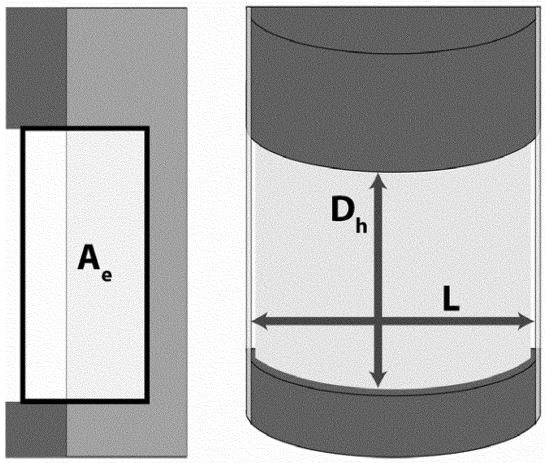

Figure A3.3 Radius case, where the distances "D_h" and "L," and the area "A_e," are representative of the planar projections of visible product when viewed at an angle normal to the transparent surface or opening.

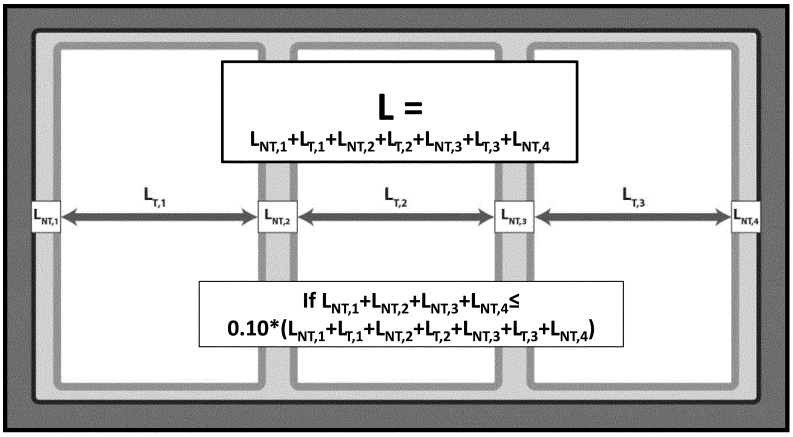

Figure A3.4 Three-door vertical closed transparent display case, where the distance "L" is the collective length of portions of the merchandiser through which product can be seen, including the linear dimension of transparent ($L_{T,i}$) and non-transparent ($L_{NT,i}$) areas, provided the total linear dimension of non-transparent areas are less than 5 inches.

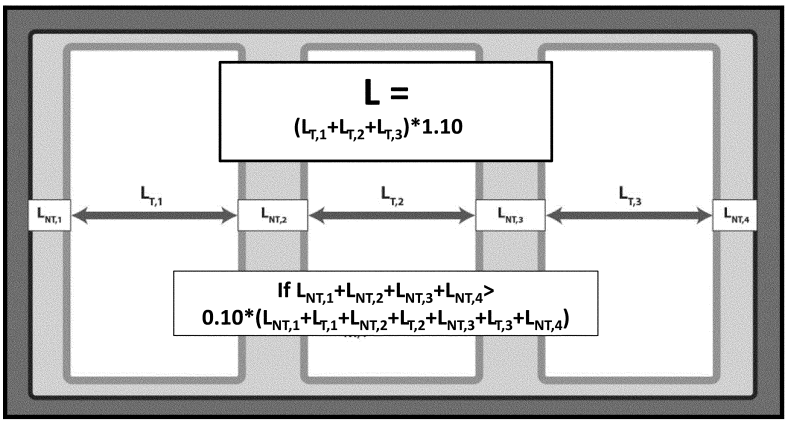

Figure A3.5 Three-door vertical closed transparent display case, where the distance "L" is including the linear dimension of transparent ($L_{T,i}$) and non-transparent ($L_{NT,i}$) areas, and the total linear dimension of non-transparent areas is greater than 5 inches.

[79 FR 22308, Apr. 21, 2014]

Subpart D—Commercial Warm Air Furnaces

SOURCE: 69 FR 61939, Oct. 21, 2004, unless otherwise noted.

§ 431.71 Purpose and scope.

This subpart contains energy conservation requirements for commercial warm air furnaces, pursuant to Part C of Title III of the Energy Policy and Conservation Act, as amended, 42 U.S.C. 6311–6317.

[69 FR 61939, Oct. 21, 2004, as amended at 70 FR 60415, Oct. 18, 2005]

§ 431.72 Definitions concerning commercial warm air furnaces.

The following definitions apply for purposes of this subpart D, and of subparts J through M of this part. Any words or terms not defined in this Section or elsewhere in this part shall be defined as provided in Section 340 of the Act.

Basic model means all commercial warm air furnaces manufactured by one manufacturer within a single equipment class, that have the same nominal input rating and the same primary energy source (e.g. gas or oil) and that do not have any differing physical or functional characteristics that affect energy efficiency.

Commercial warm air furnace means a warm air furnace that is industrial equipment, and that has a capacity (rated maximum input) of 225,000 Btu per hour or more.

Thermal efficiency for a commercial warm air furnace equals 100 percent minus percent flue loss determined using test procedures prescribed under § 431.76.

Warm air furnace means a self-contained oil-fired or gas-fired furnace designed to supply heated air through ducts to spaces that require it and includes combination warm air furnace/electric air conditioning units but does not include unit heaters and duct furnaces.

[69 FR 61939, Oct. 21, 2004, as amended at 76 FR 12503, Mar. 7, 2011; 78 FR 79598, Dec. 31, 2013]

TEST PROCEDURES

§ 431.75 Materials incorporated by reference.

(a) *General.* DOE incorporates by reference the following test procedures into subpart D of part 431. The materials listed have been approved for incorporation by reference by the Director of the Federal Register in accordance with 5 U.S.C. 552(a) and 1 CFR part 51. Any subsequent amendment to the listed materials by the standard-setting organization will not affect the DOE regulations unless and until such regulations are amended by DOE. Materials are incorporated as they exist on the date of the approval, and a notice of any changes in the materials will be published in the FEDERAL REGISTER. All approved materials are available for inspection at the National Archives and Records Administration (NARA). For information on the availability of this material at NARA, call (202) 741–6030 or go to: *http://www.archives.gov/federal_register/code_of_federal_regulations/ibr_locations.html.* Also, these materials are available for inspection at U.S. Department of Energy, Office of Energy Efficiency and Renewable Energy, Building Technologies Program, 6th Floor, 950 L'Enfant Plaza SW., Washington, DC 20024, (202) 586–2945, or go to: *http://www1.eere.energy.gov/buildings/appliance_standards/.* The referenced test procedure standards are listed below by relevant standard-setting organization, along with information on how to obtain copies from those sources.

(b) *ANSI.* American National Standards Institute. 25 W. 43rd Street, 4th Floor, New York, NY 10036. (212) 642–4900 or go to *http://www.ansi.org.*

(1) ANSI Z21.47–2012, (''ANSI Z21.47'') ''*Standard for Gas-fired Central Furnaces,*'' approved March 27, 2012, IBR approved for § 431.76.

(2) [Reserved]

(c) *ASHRAE.* American Society of Heating, Refrigerating and Air-Conditioning Engineers Inc., 1791 Tullie Circle NE., Atlanta, Georgia 30329, (404) 636–8400, or go to: *http://www.ashrae.org.*

(1) ANSI/ASHRAE Standard 103–2007, (''ASHRAE 103''), ''Method of Testing for Annual Fuel Utilization Efficiency

of Residential Central Furnaces and Boilers,'' sections 7.2.2.4, 7.8, 9.2, and 11.3.7, approved June 27, 2007, IBR approved for § 431.76.

(2) [Reserved]

(d) *HI*. Hydronics Institute Division of AHRI, 35 Russo Place, P.O. Box 218, Berkeley Heights, NJ 07922, (703) 600–0350, or go to: *http://www.ahrinet.org/hydronics + institute + section.aspx*.

(1) HI BTS–2000, sections 8.2.2, 11.1.4, 11.1.5, and 11.1.6.2, ''*Method to Determine Efficiency of Commercial Space Heating Boilers,*'' published January 2001, IBR approved for § 431.76.

(2) [Reserved]

(e) *UL*. Underwriters Laboratories, Inc., 333 Pfingsten Road, Northbrook, IL 60062, (847) 272–8800, or go to: *http://www.ul.com*.

(1) UL 727 (UL 727–1994), ''*Standard for Safety Oil-Fired Central Furnaces,*'' published on August 1, 1994, IBR approved for § 431.76.

(2) UL 727 (UL 727–2006), ''*Standard for Safety Oil-Fired Central Furnaces,*'' approved April 7, 2006, IBR approved for § 431.76.

(3) [Reserved]

[77 FR 28987, May 16, 2012, as amended at 80 FR 42663, July 17, 2015]

§ 431.76 Uniform test method for the measurement of energy efficiency of commercial warm air furnaces.

(a) *Scope*. This section covers the test requirements used to measure the energy efficiency of commercial warm air furnaces with a rated maximum input of 225,000 Btu per hour or more. On and after July 11, 2016, any representations made with respect to the energy use or efficiency of commercial warm air furnaces must be made in accordance with the results of testing pursuant to this section. At that time, you must use the relevant procedures in ANSI Z21.47 or UL 727–2006 (incorporated by reference, see § 431.75). On and after August 17, 2015 and prior to July 11, 2016, manufacturers must test commercial warm air furnaces in accordance with this amended section or the section as it appeared at 10 CFR part 430, subpart B in the 10 CFR parts 200 to 499 edition revised January 1, 2014. DOE notes that, because testing under this section is required as of July 11, 2016, manufacturers may wish to begin using this amended test procedure immediately. Any representations made with respect to the energy use or efficiency of such commercial warm air furnaces must be made in accordance with whichever version is selected.

(b) *Testing*. Where this section prescribes use of ANSI Z21.47 or UL 727–2006 (incorporated by reference, see § 431.75), perform only the procedures pertinent to the measurement of the steady-state efficiency, as specified in paragraph (c) of this section.

(c) *Test set-up*. (1) *Test set-up for gas-fired commercial warm air furnaces*. The test set-up, including flue requirement, instrumentation, test conditions, and measurements for determining thermal efficiency is as specified in sections 1.1 (Scope), 2.1 (General), 2.2 (Basic Test Arrangements), 2.3 (Test Ducts and Plenums), 2.4 (Test Gases), 2.5 (Test Pressures and Burner Adjustments), 2.6 (Static Pressure and Air Flow Adjustments), 2.39 (Thermal Efficiency), and 4.2.1 (Basic Test Arrangements for Direct Vent Central Furnaces) of ANSI Z21.47 (incorporated by reference, see § 431.75). The thermal efficiency test must be conducted only at the normal inlet test pressure, as specified in section 2.5.1 of ANSI Z21.47, and at the maximum hourly Btu input rating specified by the manufacturer for the product being tested.

(2) *Test setup for oil-fired commercial warm air furnaces*. The test setup, including flue requirement, instrumentation, test conditions, and measurement for measuring thermal efficiency is as specified in sections 1 (Scope), 2 (Units of Measurement), 3 (Glossary), 37 (General), 38 and 39 (Test Installation), 40 (Instrumentation, except 40.4 and 40.6.2 through 40.6.7, which are not required for the thermal efficiency test), 41 (Initial Test Conditions), 42 (Combustion Test—Burner and Furnace), 43.2 (Operation Tests), 44 (Limit Control Cutout Test), 45 (Continuity of Operation Test), and 46 (Air Flow, Downflow or Horizontal Furnace Test), of UL 727–2006 (incorporated by reference, see § 431.75). You must conduct a fuel oil analysis for heating value, hydrogen content, carbon content, pounds per gallon, and American Petroleum Institute (API) gravity as specified in section 8.2.2 of HI BTS–2000 (incorporated

by reference, see § 431.75). The steady-state combustion conditions, specified in Section 42.1 of UL 727–2006, are attained when variations of not more than 5 °F in the measured flue gas temperature occur for three consecutive readings taken 15 minutes apart.

(d) *Additional test measurements*—(1) *Measurement of flue CO_2 (carbon dioxide) for oil-fired commercial warm air furnaces.* In addition to the flue temperature measurement specified in section 40.6.8 of UL 727–2006 (incorporated by reference, see § 431.75), you must locate one or two sampling tubes within six inches downstream from the flue temperature probe (as indicated on Figure 40.3 of UL 727–2006). If you use an open end tube, it must project into the flue one-third of the chimney connector diameter. If you use other methods of sampling CO_2, you must place the sampling tube so as to obtain an average sample. There must be no air leak between the temperature probe and the sampling tube location. You must collect the flue gas sample at the same time the flue gas temperature is recorded. The CO_2 concentration of the flue gas must be as specified by the manufacturer for the product being tested, with a tolerance of ±0.1 percent. You must determine the flue CO_2 using an instrument with a reading error no greater than ±0.1 percent.

(2) *Procedure for the measurement of condensate for a gas-fired condensing commercial warm air furnace.* The test procedure for the measurement of the condensate from the flue gas under steady-state operation must be conducted as specified in sections 7.2.2.4, 7.8, and 9.2 of ASHRAE 103 (incorporated by reference, see § 431.75) under the maximum rated input conditions. You must conduct this condensate measurement for an additional 30 minutes of steady-state operation after completion of the steady-state thermal efficiency test specified in paragraph (c) of this section.

(e) *Calculation of thermal efficiency*—(1) *Gas-fired commercial warm air furnaces.* You must use the calculation procedure specified in section 2.39, Thermal Efficiency, of ANSI Z21.47 (incorporated by reference, see § 431.75).

(2) *Oil-fired commercial warm air furnaces.* You must calculate the percent flue loss (in percent of heat input rate) by following the procedure specified in sections 11.1.4, 11.1.5, and 11.1.6.2 of the HI BTS–2000 (incorporated by reference, see § 431.75). The thermal efficiency must be calculated as: Thermal Efficiency (percent) = 100 percent − flue loss (in percent).

(f) *Procedure for the calculation of the additional heat gain and heat loss, and adjustment to the thermal efficiency, for a condensing commercial warm air furnace.* (1) You must calculate the latent heat gain from the condensation of the water vapor in the flue gas, and calculate heat loss due to the flue condensate down the drain, as specified in sections 11.3.7.1 and 11.3.7.2 of ASHRAE 103 (incorporated by reference, see § 431.75), with the exception that in the equation for the heat loss due to hot condensate flowing down the drain in section 11.3.7.2, the assumed indoor temperature of 70 °F and the temperature term T_{OA} must be replaced by the measured room temperature as specified in section 2.2.8 of ANSI Z21.47 (incorporated by reference, see § 431.75).

(2) *Adjustment to the thermal efficiency for condensing furnaces.* You must adjust the thermal efficiency as calculated in paragraph (e)(1) of this section by adding the latent gain, expressed in percent, from the condensation of the water vapor in the flue gas, and subtracting the heat loss (due to the flue condensate down the drain), also expressed in percent, both as calculated in paragraph (f)(1) of this section, to obtain the thermal efficiency of a condensing furnace.

[80 FR 42663, July 17, 2015]

ENERGY CONSERVATION STANDARDS

§ 431.77 Energy conservation standards and their effective dates.

Each commercial warm air furnace manufactured on or after January 1, 1994, must meet the following energy efficiency standard levels:

(a) For a gas-fired commercial warm air furnace with capacity of 225,000 Btu per hour or more, the thermal efficiency at the maximum rated capacity (rated maximum input) must be not less than 80 percent.

(b) For an oil-fired commercial warm air furnace with capacity of 225,000 Btu

per hour or more, the thermal efficiency at the maximum rated capacity (rated maximum input) must be not less than 81 percent.

Subpart E—Commercial Packaged Boilers

SOURCE: 69 FR 61960, Oct. 21, 2004, unless otherwise noted.

§ 431.81 Purpose and scope.

This subpart contains energy conservation requirements for certain commercial packaged boilers, pursuant to Part C of Title III of the Energy Policy and Conservation Act. (42 U.S.C. 6311–6317)

[69 FR 61960, Oct. 21, 2004, as amended at 70 FR 60415, Oct. 18, 2005]

§ 431.82 Definitions concerning commercial packaged boilers.

The following definitions apply for purposes of this subpart E, and of subparts A and J through M of this part. Any words or terms not defined in this section or elsewhere in this part shall be defined as provided in 42 U.S.C. 6311.

Basic model means all commercial packaged boilers manufactured by one manufacturer within a single equipment class having the same primary energy source (e.g., gas or oil) and that have essentially identical electrical, physical and functional characteristics that affect energy efficiency.

Btu/h or *Btu/hr* means British thermal units per hour.

Combustion efficiency for a commercial packaged boiler is determined using test procedures prescribed under § 431.86 and is equal to 100 percent minus percent flue loss (percent flue loss is based on input fuel energy).

Commercial packaged boiler means a type of packaged low pressure boiler that is industrial equipment with a capacity, (rated maximum input) of 300,000 Btu per hour (Btu/hr) or more which, to any significant extent, is distributed in commerce:

(1) For heating or space conditioning applications in buildings; or

(2) For service water heating in buildings but does not meet the definition of ''hot water supply boiler'' in this part.

Condensing boiler means a commercial packaged boiler that condenses part of the water vapor in the flue gases, and that includes a means of collecting and draining this condensate from its heat exchanger section.

Flue condensate means liquid formed by the condensation of moisture in the flue gases.

Manufacturer of a commercial packaged boiler means any person who manufactures, produces, assembles or imports such a boiler, including any person who:

(1) Manufactures, produces, assembles or imports a commercial packaged boiler in its entirety;

(2) Manufactures, produces, assembles or imports a commercial packaged boiler in part, and specifies or approves the boiler's components, including burners or other components produced by others, as for example by specifying such components in a catalogue by make and model number or parts number; or

(3) Is any vendor or installer who sells a commercial packaged boiler that consists of a combination of components that is not specified or approved by a person described in paragraph (1) or (2) of this definition.

Packaged boiler means a boiler that is shipped complete with heating equipment, mechanical draft equipment and automatic controls; usually shipped in one or more sections and does not include a boiler that is custom designed and field constructed. If the boiler is shipped in more than one section, the sections may be produced by more than one manufacturer, and may be originated or shipped at different times and from more than one location.

Packaged high pressure boiler means a packaged boiler that is:

(1) A steam boiler designed to operate at a steam pressure higher than 15 psi gauge (psig); or

(2) A hot water boiler designed to operate at a water pressure above 160 psig or at a water temperature exceeding 250 °F, or both; or

(3) A boiler that is designed to be capable of supplying either steam or hot water, and designed to operate under the conditions in paragraphs (1) and (2) of this definition.

Packaged low pressure boiler means a packaged boiler that is:

(1) A steam boiler designed to operate at or below a steam pressure of 15 psig; or

(2) A hot water boiler designed to operate at or below a water pressure of 160 psig and a temperature of 250 °F; or

(3) A boiler that is designed to be capable of supplying either steam or hot water, and designed to operate under the conditions in paragraphs (1) and (2) of this definition.

Thermal efficiency for a commercial packaged boiler is determined using test procedures prescribed under § 431.86 and is the ratio of the heat absorbed by the water or the water and steam to the higher heating value in the fuel burned.

[69 FR 61960, Oct. 21, 2004, as amended at 74 FR 36354, July 22, 2009; 76 FR 12503, Mar. 7, 2011; 78 FR 79598, Dec. 31, 2013]

TEST PROCEDURES

§ 431.85 Materials incorporated by reference.

(a) *General.* We incorporate by reference the following standards into subpart E of part 431. The material listed has been approved for incorporation by reference by the Director of the Federal Register in accordance with 5 U.S.C. 552(a) and 1 CFR part 51. Any subsequent amendment to a standard by the standard-setting organization will not affect the DOE regulations unless and until amended by DOE. Material is incorporated as it exists on the date of the approval and a notice of any change in the material will be published in the FEDERAL REGISTER. All approved material is available for inspection at the National Archives and Records Administration (NARA). For information on the availability of this material at NARA, call 202–741–6030 or go to *http://www.archives.gov/federal_register/code_of_federal_regulations/ibr_locations.html*. Also, this material is available for inspection at U.S. Department of Energy, Office of Energy Efficiency and Renewable Energy, Building Technologies Program, 6th Floor, 950 L'Enfant Plaza, SW., Washington, DC 20024, 202–586–2945, or go to: *http://www1.eere.energy.gov/buildings/appliance_standards/*. Standards can be obtained from the sources listed below.

(b) *HI.* The Gas Appliance Manufacturers Association (GAMA) merged in 2008 with the Air-Conditioning and Refrigeration Institute to become the Air-Conditioning, Heating, and Refrigeration Institute (AHRI). The Hydronics Institute BTS–2000 Testing Standard can be obtained from AHRI. For information on how to obtain this material, contact the Hydronics Institute Section of AHRI, P.O. Box 218, Berkeley Heights, NJ 07922–0218, (866) 408–3831, or go to: *http://www.ahrinet.org/Content/OrderaStandard_573.aspx*.

(1) The Hydronics Institute Division of GAMA BTS–2000 Testing Standard, (''HI BTS–2000, Rev 06.07''), *Method to Determine Efficiency of Commercial Space Heating Boilers*, Second Edition (Rev 06.07), 2007, IBR approved for § 431.86.

(2) [Reserved]

[74 FR 36354, July 22, 2009]

§ 431.86 Uniform test method for the measurement of energy efficiency of commercial packaged boilers.

(a) *Scope.* This section provides test procedures that must be followed for measuring, pursuant to EPCA, the steady state combustion efficiency and thermal efficiency of a gas-fired or oil-fired commercial packaged boiler. These test procedures apply to packaged low pressure boilers that have rated input capacities of 300,000 Btu/h or more and are ''commercial packaged boilers,'' but do not apply under EPCA to ''packaged high pressure boilers.''

(b) *Definitions.* For purposes of this section, the Department incorporates by reference the definitions specified in Section 3.0 of the HI BTS–2000, Rev 06.07 (incorporated by reference, see § 431.85), with the exception of the definition for the terms ''packaged boiler,'' ''condensing boilers,'' and ''packaged low pressure steam'' and ''hot water boiler.''

(c) *Test Method for Commercial Packaged Boilers—General.* Follow the provisions in this paragraph (c) for all testing of packaged low pressure boilers that are commercial packaged boilers.

(1) *Test Setup*—(i) *Classifications:* If employing boiler classification, you

must classify boilers as given in Section 4.0 of the HI BTS–2000, Rev 06.07 (incorporated by reference, see § 431.85).

(ii) *Requirements:* (A) Before March 2, 2012, conduct the combustion efficiency test as given in Section 5.2 (Combustion Efficiency Test) of the HI BTS–2000, Rev 06.07 (incorporated by reference, see § 431.85) for all commercial packaged boiler equipment classes.

(B) On or after March 2, 2012, conduct the thermal efficiency test as given in Section 5.1 (Thermal Efficiency Test) of the HI BTS–2000, Rev 06.07 (incorporated by reference, see § 431.85) for the following commercial packaged boiler equipment classes: Small, gas, hot water; small, gas, steam, all except natural draft; small, gas, steam, natural draft; small, oil, hot water; small, oil, steam; large, gas, steam, all except natural draft; large, gas, steam, natural draft; and large, oil, steam. On or after March 2, 2012, conduct the combustion efficiency test as given in Section 5.2 (Combustion Efficiency Test) of the HI BTS–2000, Rev 06.07 for the following commercial packaged boiler equipment classes: Large, gas-fired, hot water and large, oil-fired, hot water.

(iii) *Instruments and Apparatus:* (A) Follow the requirements for instruments and apparatus in sections 6 (Instruments) and 7 (Apparatus), of the HI BTS–2000, Rev 06.07 (incorporated by reference, see § 431.85), with the exception of section 7.2.5 (flue connection for outdoor boilers) which is replaced with paragraph (c)(1)(iii)(B) of this section:

(B) *Flue Connection for Outdoor Boilers:* Consistent with the procedure specified in section 7.2.1 of HI BTS–2000, Rev 06.07 (incorporated by reference, see § 431.85), the integral venting used in oil-fired and power gas outdoor boilers may be modified only to the extent necessary to permit the boiler's connection to the test flue apparatus for testing.

(iv) *Test Conditions:* Use test conditions from Section 8.0 (excluding 8.6.2) of HI BTS–2000, Rev 06.07 (incorporated by reference, see § 431.85) for combustion efficiency testing. Use all of the test conditions from Section 8.0 of HI BTS–2000, Rev 06.07 for thermal efficiency testing.

(2) *Test Measurements*—(i) *Non-Condensing Boilers:* (A) *Combustion Efficiency*. Measure for combustion efficiency according to sections 9.1 (excluding sections 9.1.1.2.3 and 9.1.2.2.3), 9.2 and 10.2 of the HI BTS–2000, Rev 06.07 (incorporated by reference, see § 431.85).

(B) *Thermal Efficiency*. Measure for thermal efficiency according to sections 9.1 and 10.1 of the HI BTS–2000, Rev 06.07 (incorporated by reference, see § 431.85).

(ii) *Procedure for the Measurement of Condensate for a Condensing Boiler*. For the combustion efficiency test, collect flue condensate as specified in Section 9.2.2 of HI BTS–2000, Rev 06.07 (incorporated by reference, see § 431.85). Measure the condensate from the flue gas under steady state operation for the 30 minute collection period during the 30 minute steady state combustion efficiency test. Flue condensate mass shall be measured immediately at the end of the 30 minute collection period to prevent evaporation loss from the sample. The humidity of the room shall at no time exceed 80 percent. Determine the mass of flue condensate for the steady state period by subtracting the tare container weight from the total container and flue condensate weight measured at the end of the test period. For the thermal efficiency test, collect and measure the condensate from the flue gas as specified in Section 9.1.1 and 9.1.2 of HI BTS–2000, Rev 06.07.

(iii) *A Boiler That is Capable of Supplying Either Steam or Hot Water*—(A) *Testing*. For purposes of EPCA, before March 2, 2012, measure the combustion efficiency of any size commercial packaged boiler capable of supplying either steam or hot water either by testing the boiler in the steam mode or by testing it in both the steam and hot water modes. On or after March 2, 2012, measure the combustion efficiency and thermal efficiency of a large (fuel input greater than 2,500 kBtu/h) commercial packaged boiler capable of supplying either steam or hot water either by testing the boiler for both efficiencies in steam mode, or by testing the boiler in both steam and hot water modes measuring the thermal efficiency of the boiler in steam mode and the combustion efficiency of the boiler in hot water mode. Measure only the thermal

efficiency of a small (fuel input of greater than or equal to 300 kBtu/h and less than or equal to 2,500 kBtu/h) commercial packaged boiler capable of supplying either steam or hot water either by testing the boiler for thermal efficiency only in steam mode or by testing the boiler for thermal efficiency in both steam and hot water modes.

(B) *Rating*. If testing a large boiler only in the steam mode, use the efficiencies determined from such testing to rate the thermal efficiency for the steam mode and the combustion efficiency for the hot water mode. If testing a large boiler in both modes, rate the boiler's efficiency for each mode based on the testing in that mode. If testing a small boiler only in the steam mode, use the efficiencies determined from such testing to rate the thermal efficiency for the steam mode and the hot water mode. If testing a small boiler in both modes, rate the boiler's efficiency for each mode based on the testing in that mode.

(3) *Calculation of Efficiency*—(i) *Combustion Efficiency*. Use the calculation procedure for the combustion efficiency test specified in Section 11.2 (including the specified subsections of 11.1) of the HI BTS–2000, Rev 06.07 (incorporated by reference, *see* § 431.85).

(ii) *Thermal Efficiency*. Use the calculation procedure for the thermal efficiency test specified in Section 11.1 of the HI BTS–2000, Rev 06.07 (incorporated by reference, *see* § 431.85).

[74 FR 36354, July 22, 2009]

ENERGY EFFICIENCY STANDARDS

§ 431.87 Energy conservation standards and their effective dates.

(a) Each commercial packaged boiler manufactured on or after January 1, 1994, and before March 2, 2012, must meet the following energy efficiency standard levels:

(1) For a gas-fired packaged boiler with a capacity (rated maximum input) of 300,000 Btu/h or more, the combustion efficiency at the maximum rated capacity must be not less than 80 percent.

(2) For an oil-fired packaged boiler with a capacity (rated maximum input) of 300,000 Btu/h or more, the combustion efficiency at the maximum rated capacity must be not less than 83 percent.

(b) Each commercial packaged boiler listed in Table 1 to § 431.87 and manufactured on or after the effective date listed in Table 1 of this section, must meet the applicable energy conservation standard in Table 1.

TABLE 1 TO § 431.87—COMMERCIAL PACKAGED BOILER ENERGY CONSERVATION STANDARDS

Equipment type	Subcategory	Size category (input)	Efficiency level—Effective date: March 2, 2012*
Hot Water Commercial Packaged Boilers	Gas-fired	≥300,000 Btu/h and ≤2,500,000 Btu/h.	80.0% E_T
Hot Water Commercial Packaged Boilers	Gas-fired	>2,500,000 Btu/h	82.0% E_C
Hot Water Commercial Packaged Boilers	Oil-fired	≥300,000 Btu/h and ≤2,500,000 Btu/h.	82.0% E_T
Hot Water Commercial Packaged Boilers	Oil-fired	>2,500,000 Btu/h	84.0% E_C
Steam Commercial Packaged Boilers	Gas-fired—all, except natural draft	≥300,000 Btu/h and ≤2,500,000 Btu/h.	79.0% E_T
Steam Commercial Packaged Boilers	Gas-fired—all, except natural draft	>2,500,000 Btu/h	79.0% E_T
Steam Commercial Packaged Boilers	Gas-fired—natural draft	≥300,000 Btu/h and ≤2,500,000 Btu/h.	77.0% E_T
Steam Commercial Packaged Boilers	Gas-fired—natural draft	>2,500,000 Btu/h	77.0% E_T
Steam Commercial Packaged Boilers	Oil-fired	≥300,000 Btu/h and ≤2,500,000 Btu/h.	81.0% E_T
Steam Commercial Packaged Boilers	Oil-fired	>2,500,000 Btu/h	81.0% E_T

*Where E_C is combustion efficiency and E_T is thermal efficiency as defined in § 431.82.

(c) Each commercial packaged boiler listed in Table 2 to § 431.87 and manufactured on or after the effective date listed in Table 2 of this section, must meet the applicable energy conservation standard in Table 2.

TABLE 2 TO § 431.87—COMMERCIAL PACKAGED BOILER ENERGY CONSERVATION STANDARDS

Equipment type	Subcategory	Size category (input)	Efficiency level—Effective date: March 2, 2022*
Steam Commercial Packaged Boilers ...	Gas-fired—natural draft	≥300,000 Btu/h and ≤2,500,000 Btu/h	79.0% E_T
Steam Commercial Packaged Boilers ...	Gas-fired—natural draft	>2,500,000 Btu/h	79.0% E_T

*Where E_C is combustion efficiency and E_T is thermal efficiency as defined in § 431.82.

[74 FR 36355, July 22, 2009]

Subpart F—Commercial Air Conditioners and Heat Pumps

SOURCE: 69 FR 61969, Oct. 21, 2004, unless otherwise noted.

§ 431.91 Purpose and scope.

This subpart specifies test procedures and energy conservation standards for certain commercial air conditioners and heat pumps, pursuant to Part C of Title III of the Energy Policy and Conservation Act, as amended, 42 U.S.C. 6311–6317.

[69 FR 61969, Oct. 21, 2004, as amended at 70 FR 60415, Oct. 18, 2005]

§ 431.92 Definitions concerning commercial air conditioners and heat pumps.

The following definitions apply for purposes of this subpart F, and of subparts J through M of this part. Any words or terms not defined in this section or elsewhere in this part shall be defined as provided in 42 U.S.C. 6311.

Basic model includes:

(1) *Packaged terminal air conditioner (PTAC)* or packaged terminal heat pump (PTHP) means all units manufactured by one manufacturer within a single equipment class, having the same primary energy source (e.g., electric or gas), and which have the same or comparable compressors, same or comparable heat exchangers, and same or comparable air moving systems that have a cooling capacity within 300 Btu/h of one another.

(2) *Small, large, and very large air-cooled or water-cooled commercial package air conditioning and heating equipment* means all units manufactured by one manufacturer within a single equipment class, having the same or comparably performing compressor(s), heat exchangers, and air moving system(s) that have a common ''nominal'' cooling capacity.

(3) *Single package vertical units* means all units manufactured by one manufacturer within a single equipment class, having the same primary energy source (e.g., electric or gas), and which have the same or comparably performing compressor(s), heat exchangers, and air moving system(s) that have a rated cooling capacity within 1500 Btu/h of one another.

(4) *Computer room air conditioners* means all units manufactured by one manufacturer within a single equipment class, having the same primary energy source (e.g., electric or gas), and which have the same or comparably performing compressor(s), heat exchangers, and air moving system(s) that have a common ''nominal'' cooling capacity.

(5) *Variable refrigerant flow systems* means all units manufactured by one manufacturer within a single equipment class, having the same primary energy source (e.g., electric or gas), and which have the same or comparably performing compressor(s) that have a common ''nominal'' cooling capacity and the same heat rejection medium (e.g., air or water) (includes VRF water source heat pumps).

(6) *Small, large, and very large water source heat pump* means all units manufactured by one manufacturer within a single equipment class, having the same primary energy source (e.g., electric or gas), and which have the same or comparable compressors, same or comparable heat exchangers, and same or comparable ''nominal'' capacity.

Coefficient of Performance, or COP means the ratio of the produced cooling effect of an air conditioner or heat pump (or its produced heating effect, depending on the mode of operation) to

its net work input, when both the cooling (or heating) effect and the net work input are expressed in identical units of measurement.

Commercial package air-conditioning and heating equipment means air-cooled, water-cooled, evaporatively-cooled, or water source (not including ground water source) electrically operated, unitary central air conditioners and central air-conditioning heat pumps for commercial application.

Computer Room Air Conditioner means a basic model of commercial package air-conditioning and heating equipment (packaged or split) that is: Used in computer rooms, data processing rooms, or other information technology cooling applications; rated for sensible coefficient of performance (SCOP) and tested in accordance with 10 CFR 431.96, and is not a covered consumer product under 42 U.S.C. 6291(1)–(2) and 6292. A computer room air conditioner may be provided with, or have as available options, an integrated humidifier, temperature, and/or humidity control of the supplied air, and reheating function.

Energy Efficiency Ratio, or EER means the ratio of the produced cooling effect of an air conditioner or heat pump to its net work input, expressed in Btu/watt-hour.

Heat Recovery (in the context of variable refrigerant flow multi-split air conditioners or variable refrigerant flow multi-split heat pumps) means that the air conditioner or heat pump is also capable of providing simultaneous heating and cooling operation, where recovered energy from the indoor units operating in one mode can be transferred to one or more other indoor units operating in the other mode. A variable refrigerant flow multi-split heat recovery heat pump is a variable refrigerant flow multi-split heat pump with the addition of heat recovery capability.

Heating seasonal performance factor, or HSPF means the total heating output of a central air-conditioning heat pump during its normal annual usage period for heating, expressed in Btu's and divided by the total electric power input, expressed in watt-hours, during the same period.

Large commercial package air-conditioning and heating equipment means commercial package air-conditioning and heating equipment that is rated—

(1) At or above 135,000 Btu per hour; and

(2) Below 240,000 Btu per hour (cooling capacity).

Non-standard size means a packaged terminal air conditioner or packaged terminal heat pump with existing wall sleeve dimensions having an external wall opening of less than 16 inches high or less than 42 inches wide, and a cross-sectional area less than 670 square inches.

Packaged terminal air conditioner means a wall sleeve and a separate unencased combination of heating and cooling assemblies specified by the builder and intended for mounting through the wall, and that is industrial equipment. It includes a prime source of refrigeration, separable outdoor louvers, forced ventilation, and heating availability by builder's choice of hot water, steam, or electricity.

Packaged terminal heat pump means a packaged terminal air conditioner that utilizes reverse cycle refrigeration as its prime heat source, that has a supplementary heat source available, with the choice of hot water, steam, or electric resistant heat, and that is industrial equipment.

Seasonal energy efficiency ratio or SEER means the total cooling output of a central air conditioner or central air-conditioning heat pump, expressed in Btu's, during its normal annual usage period for cooling and divided by the total electric power input, expressed in watt-hours, during the same period.

Sensible Coefficient of Performance, or SCOP means the net sensible cooling capacity in watts divided by the total power input in watts (excluding reheaters and humidifiers).

Single package unit means any central air conditioner or central air-conditioning heat pump in which all the major assemblies are enclosed in one cabinet.

Single package vertical air conditioner means air-cooled commercial package air conditioning and heating equipment that—

(1) Is factory-assembled as a single package that—

(i) Has major components that are arranged vertically;

(ii) Is an encased combination of cooling and optional heating components; and

(iii) Is intended for exterior mounting on, adjacent interior to, or through an outside wall;

(2) Is powered by a single-or 3-phase current;

(3) May contain 1 or more separate indoor grilles, outdoor louvers, various ventilation options, indoor free air discharges, ductwork, well plenum, or sleeves; and

(4) Has heating components that may include electrical resistance, steam, hot water, or gas, but may not include reverse cycle refrigeration as a heating means.

Single package vertical heat pump means a single package vertical air conditioner that—

(1) Uses reverse cycle refrigeration as its primary heat source; and

(2) May include secondary supplemental heating by means of electrical resistance, steam, hot water, or gas.

Small commercial package air-conditioning and heating equipment means commercial package air-conditioning and heating equipment that is rated below 135,000 Btu per hour (cooling capacity).

Split system means any central air conditioner or central air conditioning heat pump in which one or more of the major assemblies are separate from the others.

Standard size means a packaged terminal air conditioner or packaged terminal heat pump with wall sleeve dimensions having an external wall opening of greater than or equal to 16 inches high or greater than or equal to 42 inches wide, and a cross-sectional area greater than or equal to 670 square inches.

Variable Refrigerant Flow Multi-Split Air Conditioner means a unit of commercial package air-conditioning and heating equipment that is configured as a split system air conditioner incorporating a single refrigerant circuit, with one or more outdoor units, at least one variable-speed compressor or an alternate compressor combination for varying the capacity of the system by three or more steps, and multiple indoor fan coil units, each of which is individually metered and individually controlled by an integral control device and common communications network and which can operate independently in response to multiple indoor thermostats. Variable refrigerant flow implies three or more steps of capacity control on common, inter-connecting piping.

Variable Refrigerant Flow Multi-Split Heat Pump means a unit of commercial package air-conditioning and heating equipment that is configured as a split system heat pump that uses reverse cycle refrigeration as its primary heating source and which may include secondary supplemental heating by means of electrical resistance, steam, hot water, or gas. The equipment incorporates a single refrigerant circuit, with one or more outdoor units, at least one variable-speed compressor or an alternate compressor combination for varying the capacity of the system by three or more steps, and multiple indoor fan coil units, each of which is individually metered and individually controlled by a control device and common communications network and which can operate independently in response to multiple indoor thermostats. Variable refrigerant flow implies three or more steps of capacity control on common, inter-connecting piping.

Very large commercial package air-conditioning and heating equipment means commercial package air-conditioning and heating equipment that is rated—

(1) At or above 240,000 Btu per hour; and

(2) Below 760,000 Btu per hour (cooling capacity).

Water-source heat pump means a single-phase or three-phase reverse-cycle heat pump that uses a circulating water loop as the heat source for heating and as the heat sink for cooling. The main components are a compressor, refrigerant-to-water heat exchanger, refrigerant-to-air heat exchanger, refrigerant expansion devices, refrigerant reversing valve, and indoor fan. Such equipment includes, but is

not limited to, water-to-air water-loop heat pumps.

[69 FR 61969, Oct. 21, 2004, as amended at 70 FR 60415, Oct. 18, 2005; 73 FR 58828, Oct. 7, 2008; 74 FR 12073, Mar. 23, 2009; 76 FR 12503, Mar. 7, 2011; 77 FR 28988, May 16, 2012; 78 FR 79598, Dec. 31, 2013; 80 FR 42664, July 17, 2015]

EFFECTIVE DATE NOTE: At 80 FR 79669, Dec. 23, 2015, § 431.92 was amended by adding a definition of ''Integrated energy efficiency ratio, or IEER,'' in alphabetical order, effective Jan. 22, 2016. For the convenience of the user, the added text is set forth as follows:

§ 431.92 Definitions concerning commercial air conditioners and heat pumps.

* * * * *

Integrated energy efficiency ratio, or *IEER,* means a weighted average calculation of mechanical cooling EERs determined for four load levels and corresponding rating conditions, as measured in appendix A of this subpart, expressed in Btu/watt-hour.

* * * * *

TEST PROCEDURES

§ 431.95 Materials incorporated by reference.

(a) *General.* DOE incorporates by reference the following test procedures into subpart F of part 431. The materials listed have been approved for incorporation by reference by the Director of the Federal Register in accordance with 5 U.S.C. 552(a) and 1 CFR part 51. Any subsequent amendment to the listed materials by the standard-setting organization will not affect the DOE regulations unless and until such regulations are amended by DOE. Materials are incorporated as they exist on the date of the approval, and a notice of any changes in the materials will be published in the FEDERAL REGISTER. All approved materials are available for inspection at the National Archives and Records Administration (NARA). For information on the availability of this material at NARA, call (202) 741–6030, or go to: *http://www.archives.gov/federal_register/code_of_federal_regulations/ibr_locations.html.* Also, this material is available for inspection at U.S. Department of Energy, Office of Energy Efficiency and Renewable Energy, Building Technologies Program, 6th Floor, 950 L'Enfant Plaza SW., Washington, DC 20024, (202) 586–2945, or go to: *http://www1.eere.energy.gov/buildings/appliance_standards/.* The referenced test procedure standards are listed below by relevant standard-setting organization, along with information on how to obtain copies from those sources.

(b) *AHRI.* Air-Conditioning, Heating, and Refrigeration Institute, 2111 Wilson Blvd., Suite 500, Arlington, VA 22201, (703) 524–8800, or go to: *http://www.ahrinet.org.*

(1) ARI Standard 210/240–2003, ''2003 Standard for *Unitary Air-Conditioning & Air-Source Heat Pump Equipment,*'' published in 2003 (AHRI 210/240–2003), IBR approved for § 431.96.

(2) ANSI/AHRI Standard 210/240–2008, ''2008 Standard for *Performance Rating of Unitary Air-Conditioning & Air-Source Heat Pump Equipment,*'' approved by ANSI on October 27, 2011 and updated by addendum 1 in June 2011 and addendum 2 in March 2012 (AHRI 210/240–2008), IBR approved for § 431.96.

(3) AHRI Standard 310/380–2014, (''AHRI 310/380–2014''), ''Standard for Packaged Terminal Air-Conditioners and Heat Pumps,'' February 2014, IBR approved for § 431.96.

(4) ARI Standard 340/360–2004, ''2004 Standard for *Performance Rating of Commercial and Industrial Unitary Air-Conditioning and Heat Pump Equipment,*'' published in 2004 (AHRI 340/360–2004), IBR approved for § 431.96.

(5) ANSI/AHRI Standard 340/360–2007, ''2007 Standard for *Performance Rating of Commercial and Industrial Unitary Air-Conditioning and Heat Pump Equipment,*'' approved by ANSI on October 27, 2011 and updated by addendum 1 in December 2010 and addendum 2 in June 2011 (AHRI 340/360–2007), IBR approved for § 431.96.

(6) ANSI/AHRI Standard 390–2003, ''2003 Standard for *Performance Rating of Single Package Vertical Air-Conditioners and Heat Pumps,*'' dated 2003, (AHRI 390–2003), IBR approved for § 431.96.

(7) ANSI/AHRI Standard 1230–2010, ''2010 Standard for *Performance Rating of Variable Refrigerant Flow (VRF) Multi-Split Air-Conditioning and Heat Pump Equipment,*'' approved August 2, 2010 and updated by addendum 1 in

March 2011 (AHRI 1230–2010), IBR approved for § 431.96.

(8) [Reserved]

(c) *ASHRAE*. American Society of Heating, Refrigerating and Air-Conditioning Engineers, 1791 Tullie Circle, NE., Atlanta, Georgia 30329, (404) 636–8400, or go to: *http://www.ashrae.org*.

(1) ANSI/ASHRAE Standard 16–1983 (RA 2014), (''ANSI/ASHRAE 16''), ''Method of Testing for Rating Room Air Conditioners and Packaged Terminal Air Conditioners,'' ASHRAE reaffirmed July 3, 2014, IBR approved for § 431.96.

(2) ANSI/ASHRAE Standard 37–2009, (''ANSI/ASHRAE 37''), ''Methods of Testing for Rating Electrically Driven Unitary Air-Conditioning and Heat Pump Equipment,'' ASHRAE approved June 24, 2009, IBR approved for § 431.96.

(3) ANSI/ASHRAE Standard 58–1986 (RA 2014), (''ANSI/ASHRAE 58''), ''Method of Testing for Rating Room Air-Conditioner and Packaged Terminal Air-Conditioner Heating Capacity,'' ASHRAE reaffirmed July 3, 2014, IBR approved for § 431.96.

(4) ASHRAE Standard 127–2007, ''*Method of Testing for Rating Computer and Data Processing Room Unitary Air Conditioners*,'' approved on June 28, 2007, (ASHRAE 127–2007), IBR approved for § 431.96.

(d) *ISO*. International Organization for Standardization, 1, ch. De la Voie-Creuse, Case Postale 56, CH–1211 Geneva 20, Switzerland, + 41 22 749 01 11 or go to: *http://www.iso.ch/*.

(1) ISO Standard 13256–1, ''*Water-source heat pumps—Testing and rating for performance—Part 1: Water-to-air and brine-to-air heat pumps*,'' approved 1998, IBR approved for § 431.96.

(2) [Reserved]

[77 FR 28989, May 16, 2012, as amended at 80 FR 37148, June 30, 2015]

EFFECTIVE DATE NOTE: At 80 FR 79669, Dec. 23, 2015, § 431.95 was amended by removing paragraph (b)(4); redesignating paragraphs (b)(5) through (8) as (b)(4) through (7), respectively; and adding ''and appendix A of this subpart'' to the end of newly redesignated paragraphs (b)(4) and (c)(2), effective Jan. 22, 2016.

§ 431.96 Uniform test method for the measurement of energy efficiency of commercial air conditioners and heat pumps.

(a) *Scope*. This section contains test procedures for measuring, pursuant to EPCA, the energy efficiency of any small, large, or very large commercial package air-conditioning and heating equipment, packaged terminal air conditioners and packaged terminal heat pumps, computer room air conditioners, variable refrigerant flow systems, and single package vertical air conditioners and single package vertical heat pumps.

(b) *Testing and calculations*. (1) Determine the energy efficiency of each type of covered equipment by conducting the test procedure(s) listed in the fifth column of Table 1 of this section along with any additional testing provisions set forth in paragraphs (c) through (g) of this section, that apply to the energy efficiency descriptor for that equipment, category, and cooling capacity. The omitted sections of the test procedures listed in the fifth column of Table 1 of this section shall not be used.

(2) After June 24, 2016, any representations made with respect to the energy use or efficiency of packaged terminal air conditioners and heat pumps (PTACs and PTHPs) must be made in accordance with the results of testing pursuant to this section. Manufacturers conducting tests of PTACs and PTHPs after July 30, 2015 and prior to June 24, 2016, must conduct such test in accordance with either table 1 to this section or § 431.96 as it appeared at 10 CFR part 431, subpart F, in the 10 CFR parts 200 to 499 edition revised as of January 1, 2014. Any representations made with respect to the energy use or efficiency of such packaged terminal air conditioners and heat pumps must be in accordance with whichever version is selected.

TABLE 1 TO § 431.96—TEST PROCEDURES FOR COMMERCIAL AIR CONDITIONERS AND HEAT PUMPS

Equipment type	Category	Cooling capacity	Energy efficiency descriptor	Use tests, conditions, and procedures [1] in	Additional test procedure provisions as indicated in the listed paragraphs of this section
Small Commercial Packaged Air-Conditioning and Heating Equipment.	Air-Cooled, 3-Phase, AC and HP.	<65,000 Btu/h	SEER and HSPF	AHRI 210/240–2008 (omit section 6.5).	Paragraphs (c) and (e).
	Air-Cooled AC and HP.	≥65,000 Btu/h and <135,000 Btu/h.	EER and COP	AHRI 340/360–2007 (omit section 6.3).	Paragraphs (c) and (e).
	Water-Cooled and Evaporatively-Cooled AC.	<65,000 Btu/h	EER	AHRI 210/240–2008 (omit section 6.5).	Paragraphs (c) and (e).
		≥65,000 Btu/h and <135,000 Btu/h.	EER	AHRI 340/360–2007 (omit section 6.3).	Paragraphs (c) and (e).
	Water-Source HP	<135,000 Btu/h	EER and COP	ISO Standard 13256–1 (1998).	Paragraph (e).
Large Commercial Packaged Air-Conditioning and Heating Equipment.	Air-Cooled AC and HP.	≥135,000 Btu/h and <240,000 Btu/h.	EER and COP	AHRI 340/360–2007 (omit section 6.3).	Paragraphs (c) and (e).
	Water-Cooled and Evaporatively-Cooled AC.	≥135,000 Btu/h and <240,000 Btu/h.	EER	AHRI 340/360–2007 (omit section 6.3).	Paragraphs (c) and (e).
Very Large Commercial Packaged Air-Conditioning and Heating Equipment.	Air-Cooled AC and HP.	≥240,000 Btu/h and <760,000 Btu/h.	EER and COP	AHRI 340/360–2007 (omit section 6.3).	Paragraphs (c) and (e).
	Water-Cooled and Evaporatively-Cooled AC.	≥240,000 Btu/h and <760,000 Btu/h.	EER	AHRI 340/360–2007 (omit section 6.3)..	Paragraphs (c) and (e).
Packaged Terminal Air Conditioners and Heat Pumps.	AC and HP	<760,000 Btu/h	EER and COP	See paragraph (g) of this section.	Paragraphs (c), (e), and (g).
Computer Room Air Conditioners.	AC	<65,000 Btu/h	SCOP	ASHRAE 127–2007 (omit section 5.11).	Paragraphs (c) and (e).
		≥65,000 Btu/h and <760,000 Btu/h.	SCOP	ASHRAE 127–2007 (omit section 5.11).	Paragraphs (c) and (e).
Variable Refrigerant Flow Multi-split Systems.	AC	<760,000 Btu/h	EER and COP	AHRI 1230–2010 (omit sections 5.1.2 and 6.6).	Paragraphs (c), (d), (e), and (f).
Variable Refrigerant Flow Multi-split Systems, Air-cooled.	HP	<760,000 Btu/h	EER and COP	AHRI 1230–2010 (omit sections 5.1.2 and 6.6).	Paragraphs (c), (d), (e), and (f).
Variable Refrigerant Flow Multi-split Systems, Water-source.	HP	<17,000 Btu/h	EER and COP	AHRI 1230–2010 (omit sections 5.1.2 and 6.6).	Paragraphs (c), (d), (e), and (f).
Variable Refrigerant Flow Multi-split Systems, Water-source.	HP	≥17,000 Btu/h and <760,000 Btu/h.	EER and COP	AHRI 1230–2010 (omit sections 5.1.2 and 6.6).	Paragraphs (c), (d), (e), and (f).
Single Package Vertical Air Conditioners and Single Package Vertical Heat Pumps.	AC and HP	<760,000 Btu/h	EER and COP	AHRI 390–2003 (omit section 6.4).	Paragraphs (c) and (e).

[1] Incorporated by reference, see § 431.95.

(c) *Optional break-in period*. Manufacturers may optionally specify a ''break-in'' period, not to exceed 20 hours, to operate the equipment under test prior to conducting the test method specified by AHRI 210/240–2008, AHRI 310/380–2014, AHRI 340/360–2007, AHRI 390–2003, AHRI 1230–2010, or ASHRAE 127–2007 (incorporated by reference, see § 431.95). A manufacturer who elects to use an optional break-in period in its certification testing should record this information (including the duration) in the test data underlying the certified

ratings that is required to be maintained under 10 CFR 429.71.

(d) *Refrigerant line length corrections for tests conducted using AHRI 1230–2010.* For test setups where it is physically impossible for the laboratory to use the required line length listed in Table 3 of the AHRI 1230–2010 (incorporated by reference, see § 431.95), then the actual refrigerant line length used by the laboratory may exceed the required length and the following correction factors are applied:

Piping length beyond minimum, X (ft)	Piping length beyond minimum, Y (m)	Cooling capacity correction %
0>X ≤20	0>Y ≤6.1	1
20>X ≤40	6.1>Y ≤12.2	2
40>X ≤60	12.2>Y ≤18.3	3
60>X ≤80	18.3>Y ≤24.4	4
80>X ≤100	24.4>Y ≤30.5	5
100 >X ≤120	30.5>Y ≤36.6	6

(e) *Additional provisions for equipment set-up.* The only additional specifications that may be used in setting up the basic model for test are those set forth in the installation and operation manual shipped with the unit. Each unit should be set up for test in accordance with the manufacturer installation and operation manuals. Paragraphs (e)(1) through (3) of this section provide specifications for addressing key information typically found in the installation and operation manuals.

(1) If a manufacturer specifies a range of superheat, sub-cooling, and/or refrigerant pressure in its installation and operation manual for a given basic model, any value(s) within that range may be used to determine refrigerant charge or mass of refrigerant, unless the manufacturer clearly specifies a rating value in its installation and operation manual, in which case the specified rating value shall be used.

(2) The air flow rate used for testing must be that set forth in the installation and operation manuals being shipped to the commercial customer with the basic model and clearly identified as that used to generate the DOE performance ratings. If a rated air flow value for testing is not clearly identified, a value of 400 standard cubic feet per minute (scfm) per ton shall be used.

(3) For VRF systems, the test set-up and the fixed compressor speeds (*i.e.*, the maximum, minimum, and any intermediate speeds used for testing) should be recorded and maintained as part of the test data underlying the certified ratings that is required to be maintained under 10 CFR 429.71.

(f) *Manufacturer involvement in assessment or enforcement testing for variable refrigerant flow systems.* A manufacturer's representative will be allowed to witness assessment and/or enforcement testing for VRF systems. The manufacturer's representative will be allowed to inspect and discuss set-up only with a DOE representative and adjust only the modulating components during testing in the presence of a DOE representative that are necessary to achieve steady-state operation. Only previously documented specifications for set-up as specified under paragraphs (d) and (e) of this section will be used.

(g) *Test Procedures for Packaged Terminal Air Conditioners and Packaged Terminal Heat Pumps*—(1) *Cooling mode testing.* The test method for testing packaged terminal air conditioners and packaged terminal heat pumps in cooling mode shall consist of application of the methods and conditions in AHRI 310/380–2014 sections 3, 4.1, 4.2, 4.3, and 4.4 (incorporated by reference; see § 431.95), and in ANSI/ASHRAE 16 (incorporated by reference; see § 431.95) or ANSI/ASHRAE 37 (incorporated by reference; see § 431.95), except that instruments used for measuring electricity input shall be accurate to within ±0.5 percent of the quantity measured. Where definitions provided in AHRI 310/380–2014, ANSI/ASHRAE 16, and/or ANSI/ASHRAE 37 conflict with the definitions provided in 10 CFR 431.92, the 10 CFR 431.92 definitions shall be used. Where AHRI 310/380–2014 makes reference to ANSI/ASHRAE 16, it is interpreted as reference to ANSI/ASHRAE 16–1983 (RA 2014).

(2) *Heating mode testing.* The test method for testing packaged terminal heat pumps in heating mode shall consist of application of the methods and conditions in AHRI 310/380–2014 sections 3, 4.1, 4.2 (except the section 4.2.1.2(b) reference to ANSI/ASHRAE 37), 4.3, and 4.4 (incorporated by reference; see § 431.95), and in ANSI/ASHRAE 58 (incorporated by reference; see § 431.95). Where definitions provided in AHRI 310/380–2014 or ANSI/ASHRAE 58 conflict

with the definitions provided in 10 CFR 431.92, the 10 CFR 431.92 definitions shall be used. Where AHRI 310/380–2014 makes reference to ANSI/ASHRAE 58, it is interpreted as reference to ANSI/ASHRAE 58–1986 (RA 2014).

(3) *Wall sleeves.* For packaged terminal air conditioners and packaged terminal heat pumps, the unit must be installed in a wall sleeve with a 14 inch depth if available. If a 14 inch deep wall sleeve is not available, use the available wall sleeve option closest to 14 inches in depth. The area(s) between the wall sleeve and the insulated partition between the indoor and outdoor rooms must be sealed to eliminate all air leakage through this area.

(4) *Optional pre-filling of the condensate drain pan.* For packaged terminal air conditioners and packaged terminal heat pumps, test facilities may add water to the condensate drain pan of the equipment under test (until the water drains out due to overflow devices or until the pan is full) prior to conducting the test method specified by AHRI 310/380–2014 (incorporated by reference, see § 431.95). No specific level of water mineral content or water temperature is required for the water added to the condensate drain pan.

(5) *Filter selection.* For packaged terminal air conditioners and packaged terminal heat pumps, the indoor filter used during testing shall be the standard or default filter option shipped with the model. If a particular model is shipped without a filter, the unit must be tested with a MERV–1 filter sized appropriately for the filter slot.

[77 FR 28989, May 16, 2012; 80 FR 11857, Mar. 5, 2015, as amended at 80 FR 37148, June 30, 2015]

EFFECTIVE DATE NOTE: At 80 FR 79669, Dec. 23, 2015, § 431.96 was amended by revising paragraphs (b)(1) and (c) and Table 1, effective Jan. 22, 2016. For the convenience of the user, the revised text is set forth as follows:

§ 431.96 Uniform test method for the measurement of energy efficiency of commercial air conditioners and heat pumps.

* * * * *

(b) * * *

(1) Determine the energy efficiency of each type of covered equipment by conducting the test procedure(s) listed in Table 1 of this section along with any additional testing provisions set forth in paragraphs (c) through (g) of this section and appendix A to this subpart, that apply to the energy efficiency descriptor for that equipment, category, and cooling capacity. The omitted sections of the test procedures listed in Table 1 of this section must not be used.

* * * * *

TABLE 1 TO § 431.96—TEST PROCEDURES FOR COMMERCIAL AIR CONDITIONERS AND HEAT PUMPS

Equipment type	Category	Cooling capacity	Energy efficiency descriptor	Use tests, conditions, and procedures [1] in	Additional test procedure provisions as indicated in the listed paragraphs of this section
Small Commercial Package Air-Conditioning and Heating Equipment.	Air-Cooled, 3-Phase, AC and HP.	<65,000 Btu/h ...	SEER and HSPF	AHRI 210/240–2008 (omit section 6.5).	Paragraphs (c) and (e).
	Air-Cooled AC and HP.	≥65,000 Btu/h and <135,000 Btu/h.	EER, IEER, and COP.	Appendix A to this subpart.	None.
	Water-Cooled and Evaporatively-Cooled AC.	<65,000 Btu/h ...	EER	AHRI 210/240–2008 (omit section 6.5).	Paragraphs (c) and (e).
		≥65,000 Btu/h and <135,000 Btu/h.	EER	AHRI 340/360–2007 (omit section 6.3).	Paragraphs (c) and (e).
	Water-Source HP	<135,000 Btu/h	EER and COP	ISO Standard 13256–1 (1998).	Paragraph (e).
Large Commercial Package Air-Conditioning and Heating Equipment.	Air-Cooled AC and HP.	≥135,000 Btu/h and <240,000 Btu/h.	EER, IEER and COP.	Appendix A to this subpart.	None.
	Water-Cooled and Evaporatively-Cooled AC.	≥135,000 Btu/h and <240,000 Btu/h.	EER	AHRI 340/360–2007 (omit section 6.3).	Paragraphs (c) and (e).

TABLE 1 TO § 431.96—TEST PROCEDURES FOR COMMERCIAL AIR CONDITIONERS AND HEAT PUMPS—Continued

Equipment type	Category	Cooling capacity	Energy efficiency descriptor	Use tests, conditions, and procedures [1] in	Additional test procedure provisions as indicated in the listed paragraphs of this section
Very Large Commercial Package Air-Conditioning and Heating Equipment.	Air-Cooled AC and HP.	≥240,000 Btu/h and <760,000 Btu/h.	EER, IEER and COP.	Appendix A to this subpart.	None.
	Water-Cooled and Evaporatively-Cooled AC.	≥240,000 Btu/h and <760,000 Btu/h.	EER	AHRI 340/360–2007 (omit section 6.3).	Paragraphs (c) and (e).
Packaged Terminal Air Conditioners and Heat Pumps.	AC and HP	<760,000 Btu/h	EER and COP	Paragraph (g) of this section.	Paragraphs (c), (e), and (g).
Computer Room Air Conditioners.	AC	<65,000 Btu/h	SCOP	ASHRAE 127–2007 (omit section 5.11).	Paragraphs (c) and (e).
		≥65,000 Btu/h and <760,000 Btu/h.	SCOP	ASHRAE 127–2007 (omit section 5.11).	Paragraphs (c) and (e).
Variable Refrigerant Flow Multi-split Systems.	AC	<65,000 Btu/h (3-phase).	SEER	AHRI 1230–2010 (omit sections 5.1.2 and 6.6).	Paragraphs (c), (d), (e), and (f).
		≥65,000 Btu/h and <760,000 Btu/h.	EER	AHRI 1230–2010 (omit sections 5.1.2 and 6.6).	Paragraphs (c), (d), (e), and (f).
Variable Refrigerant Flow Multi-split Systems, Air-cooled.	HP	<65,000 Btu/h (3-phase).	SEER and HSPF	AHRI 1230–2010 (omit sections 5.1.2 and 6.6).	Paragraphs (c), (d), (e), and (f).
		≥65,000 Btu/h and <760,000 Btu/h.	EER and COP	AHRI 1230–2010 (omit sections 5.1.2 and 6.6).	Paragraphs (c), (d), (e), and (f).
Variable Refrigerant Flow Multi-split Systems, Water-source.	HP	<760,000 Btu/h	EER and COP	AHRI 1230–2010 (omit sections 5.1.2 and 6.6).	Paragraphs (c), (d), (e), and (f).
Single Package Vertical Air Conditioners and Single Package Vertical Heat Pumps.	AC and HP	<760,000 Btu/h	EER and COP	AHRI 390–2003 (omit section 6.4).	Paragraphs (c) and (e).

[1] Incorporated by reference; see § 431.95.

(c) *Optional break-in period for tests conducted using AHRI 210/240–2008, AHRI 390–2003, AHRI 1230–2010, and ASHRAE 127–2007.* Manufacturers may optionally specify a ''break-in'' period, not to exceed 20 hours, to operate the equipment under test prior to conducting the test method specified by AHRI 210/240–2008, AHRI 390–2003, AHRI 1230–2010, or ASHRAE 127–2007 (incorporated by reference; see § 431.95). A manufacturer who elects to use an optional compressor break-in period in its certification testing should record this information (including the duration) in the test data underlying the certified ratings that is required to be maintained under 10 CFR 429.71.

* * * * *

ENERGY EFFICIENCY STANDARDS

§ 431.97 Energy efficiency standards and their compliance dates.

(a) All basic models of commercial package air-conditioning and heating equipment must be tested for performance using the applicable DOE test procedure in § 431.96, be compliant with the applicable standards set forth in paragraphs (b) through (f) of this section, and be certified to the Department under 10 CFR part 429.

(b) Each commercial air conditioner or heat pump (not including single package vertical air conditioners and single package vertical heat pumps, packaged terminal air conditioners and

packaged terminal heat pumps, computer room air conditioners, and variable refrigerant flow systems) manufactured on or after the compliance date listed in the corresponding table must meet the applicable minimum energy efficiency standard level(s) set forth in Tables 1, 2, 3, and 4 of this section.

TABLE 1 TO § 431.97—MINIMUM COOLING EFFICIENCY STANDARDS FOR AIR-CONDITIONING AND HEATING EQUIPMENT (NOT INCLUDING SINGLE PACKAGE VERTICAL AIR CONDITIONERS AND SINGLE PACKAGE VERTICAL HEAT PUMPS, PACKAGED TERMINAL AIR CONDITIONERS AND PACKAGED TERMINAL HEAT PUMPS, COMPUTER ROOM AIR CONDITIONERS, AND VARIABLE REFRIGERANT FLOW MULTI-SPLIT AIR CONDITIONERS AND HEAT PUMPS)

Equipment category	Cooling capacity	Sub-category	Heating type	Efficiency level	Compliance date: equipment manufactured on and after. . .
Small Commercial Packaged Air-Conditioning and Heating Equipment (Air-Cooled, 3-Phase, Split-System).	<65,000 Btu/h	AC	All	SEER = 13	June 16, 2008.
		HP	All	SEER = 13	June 16, 2008 [1].
Small Commercial Packaged Air-Conditioning and Heating Equipment (Air-Cooled, 3-Phase, Single-Package).	<65,000 Btu/h	AC	All	SEER = 13	June 16, 2008 [1].
		HP	All	SEER = 13	June 16, 2008 [1].
Small Commercial Packaged Air-Conditioning and Heating Equipment (Air-Cooled).	≥65,000 Btu/h and <135,000 Btu/h.	AC	No Heating or Electric Resistance Heating.	EER = 11.2	January 1, 2010.
			All Other Types of Heating	EER = 11.0	January 1, 2010.
		HP	No Heating or Electric Resistance Heating.	EER = 11.0	January 1, 2010.
			All Other Types of Heating	EER = 10.8	January 1, 2010.
Large Commercial Packaged Air-Conditioning and Heating Equipment (Air-Cooled).	≥135,000 Btu/h and <240,000 Btu/h.	AC	No Heating or Electric Resistance Heating.	EER = 11.0	January 1, 2010.
			All Other Types of Heating	EER = 10.8	January 1, 2010.
		HP	No Heating or Electric Resistance Heating.	EER = 10.6	January 1, 2010.
			All Other Types of Heating	EER = 10.4	January 1, 2010.
Very Large Commercial Packaged Air-Conditioning and Heating Equipment (Air-Cooled).	≥240,000 Btu/h and <760,000 Btu/h.	AC	No Heating or Electric Resistance Heating.	EER = 10.0	January 1, 2010.
			All Other Types of Heating	EER = 9.8	January 1, 2010.
		HP	No Heating or Electric Resistance Heating.	EER = 9.5	January 1, 2010.
			All Other Types of Heating	EER = 9.3	January 1, 2010.
Small Commercial Package Air-Conditioning and Heating Equipment (Water-Cooled).	<65,000 Btu/h	AC	All	EER = 12.1	October 29, 2003.
	≥65,000 Btu/h and <135,000 Btu/h.	AC	No Heating or Electric Resistance Heating.	EER = 12.1	June 1, 2013.
			All Other Types of Heating	EER = 11.9	June 1, 2013.
Large Commercial Package Air-Conditioning and Heating Equipment (Water-Cooled).	≥135,000 and <240,000 Btu/h.	AC	No Heating or Electric Resistance Heating.	EER = 12.5	June 1, 2014.
			All Other Types of Heating	EER = 12.3	June 1, 2014.
Very Large Commercial Package Air-Conditioning and Heating Equipment (Water-Cooled).	≥240,000 and <760,000 Btu/h.	AC	No Heating or Electric Resistance Heating.	EER = 12.4	June 1, 2014.
			All Other Types of Heating	EER = 12.2	June 1, 2014.

TABLE 1 TO § 431.97—MINIMUM COOLING EFFICIENCY STANDARDS FOR AIR-CONDITIONING AND HEATING EQUIPMENT (NOT INCLUDING SINGLE PACKAGE VERTICAL AIR CONDITIONERS AND SINGLE PACKAGE VERTICAL HEAT PUMPS, PACKAGED TERMINAL AIR CONDITIONERS AND PACKAGED TERMINAL HEAT PUMPS, COMPUTER ROOM AIR CONDITIONERS, AND VARIABLE REFRIGERANT FLOW MULTI-SPLIT AIR CONDITIONERS AND HEAT PUMPS)—Continued

Equipment category	Cooling capacity	Sub-category	Heating type	Efficiency level	Compliance date: equipment manufactured on and after. . .
Small Commercial Package Air-Conditioning and Heating Equipment (Evaporatively-Cooled).	<65,000 Btu/h	AC	All	EER = 12.1	October 29, 2003.
	≥65,000 and <135,000 Btu/h.	AC	No Heating or Electric Resistance Heating.	EER = 12.1	June 1, 2013.
			All Other Types of Heating	EER = 11.9	June 1, 2013.
Large Commercial Package Air-Conditioning and Heating Equipment (Evaporatively-Cooled).	≥135,000 and <240,000 Btu/h.	AC	No Heating or Electric Resistance Heating.	EER = 12.0	June 1, 2014.
			All Other Types of Heating	EER = 11.8	June 1, 2014.
Very Large Commercial Package Air-Conditioning and Heating Equipment (Evaporatively-Cooled).	≥240,000 and <760,000 Btu/h.	AC	No Heating or Electric Resistance Heating.	EER = 11.9	June 1, 2014.
			All Other Types of Heating	EER = 11.7	June 1, 2014.
Small Commercial Packaged Air-Conditioning and Heating Equipment (Water-Source: Water-to-Air, Water-Loop).	<17,000 Btu/h	HP	All	EER = 11.2	October 29, 2003 [2].
	≥17,000 Btu/h and <65,000 Btu/h.	HP	All	EER = 12.0	October 29, 2003 [2].
	≥65,000 Btu/h and <135,000 Btu/h.	HP	All	EER = 12.0	October 29, 2003 [2].

[1] And manufactured before January 1, 2017. See Table 3 of this section for updated efficiency standards.
[2] And manufactured before October 9, 2015. See Table 3 of this section for updated efficiency standards.

TABLE 2 TO § 431.97—MINIMUM HEATING EFFICIENCY STANDARDS FOR AIR-CONDITIONING AND HEATING EQUIPMENT (HEAT PUMPS)

Equipment category	Cooling capacity	Efficiency level	Compliance date: equipment manufactured on and after. . .
Small Commercial Packaged Air-Conditioning and Heating Equipment (Air-Cooled, 3-Phase, Split-System).	<65,000 Btu/h	HSPF = 7.7	June 16, 2008.[1]
Small Commercial Packaged Air-Conditioning and Heating Equipment (Air-Cooled, 3-Phase, Single-Package).	<65,000 Btu/h	HSPF = 7.7	June 16, 2008.[1]
Small Commercial Packaged Air-Conditioning and Heating Equipment (Air-Cooled).	≥65,000 Btu/h and <135,000 Btu/h.	COP = 3.3	January 1, 2010.
Large Commercial Packaged Air-Conditioning and Heating Equipment (Air-Cooled).	≥135,000 Btu/h and <240,000 Btu/h.	COP = 3.2	January 1, 2010.
Very Large Commercial Packaged Air-Conditioning and Heating Equipment (Air-Cooled).	≥240,000 Btu/h and <760,000 Btu/h.	COP = 3.2	January 1, 2010.
Small Commercial Packaged Air-Conditioning and Heating Equipment (Water-Source: Water-to-Air, Water-Loop).	<135,000 Btu/h	COP = 4.2	October 29, 2003.[2]

[1] And manufactured before January 1, 2017. See Table 3 of this section for updated efficiency standards.
[2] And manufactured before October 9, 2015. See Table 3 of this section for updated efficiency standards.

TABLE 3 TO § 431.97—UPDATES TO THE MINIMUM COOLING EFFICIENCY STANDARDS FOR CERTAIN AIR-CONDITIONING AND HEATING EQUIPMENT

Equipment category	Cooling capacity	Sub-category	Heating type	Efficiency level	Compliance date: equipment manufactured on and after
Small Commercial Packaged Air-Conditioning and Heating Equipment (Air-Cooled, 3-Phase, Split-System).	<65,000 Btu/h	AC	All	SEER = 13.0	June 16, 2008.
		HP	All	SEER = 14.0	January 1, 2017.
Small Commercial Packaged Air-Conditioning and Heating Equipment (Air-Cooled, 3-Phase, Single-Package).	<65,000 Btu/h	AC	All	SEER = 14.0	January 1, 2017.
		HP	All	SEER = 14.0	January 1, 2017.
Small Commercial Packaged Air-Conditioning and Heating Equipment (Water-Source: Water-to-Air, Water-Loop).	<17,000 Btu/h	HP	All	EER = 12.2	October 9, 2015.
	≥17,000 Btu/h and <65,000 Btu/h.	HP	All	EER = 13.0	October 9, 2015.
	≥65,000 Btu/h and <135,000 Btu/h.	HP	All	EER = 13.0	October 9, 2015.

TABLE 4 TO § 431.97—UPDATES TO THE MINIMUM HEATING EFFICIENCY STANDARDS FOR CERTAIN AIR-CONDITIONING AND HEATING EQUIPMENT (HEAT PUMPS)

Equipment category	Cooling capacity	Efficiency level	Compliance date: equipment manufactured on and after . . .
Small Commercial Packaged Air-Conditioning and Heating Equipment (Air-Cooled, 3-Phase, Split-System).	<65,000 Btu/h	HSPF = 8.2	January 1, 2017.
Small Commercial Packaged Air-Conditioning and Heating Equipment (Air-Cooled, 3-Phase, Single-Package).	<65,000 Btu/h	HSPF = 8.0	January 1, 2017.
Small Commercial Packaged Air-Conditioning and Heating Equipment (Water-Source: Water-to-Air, Water-Loop).	<135,000 Btu/h	COP = 4.3	October 9, 2015.

(c) Each non-standard size packaged terminal air conditioner (PTAC) and packaged terminal heat pump (PTHP) manufactured on or after October 7, 2010 must meet the applicable minimum energy efficiency standard level(s) set forth in Table 5 of this section. Each standard size PTAC manufactured on or after October 8, 2012, and before January 1, 2017 must meet the applicable minimum energy efficiency standard level(s) set forth in Table 5 of this section. Each standard size PTHP manufactured on or after October 8, 2012 must meet the applicable minimum energy efficiency standard level(s) set forth in Table 5 of this section. Each standard size PTAC manufactured on or after January 1, 2017 must meet the applicable minimum energy efficiency standard level(s) set forth in Table 6 of this section.

TABLE 5 TO § 431.97—MINIMUM EFFICIENCY STANDARDS FOR PTAC AND PTHP

Equipment type	Category	Cooling capacity	Efficiency level	Compliance date: products manufactured on and after . . .
PTAC	Standard Size	<7,000 Btu/h	EER = 11.7	October 8, 2012.[2]
		≥7,000 Btu/h and ≤15,000 Btu/h	EER = 13.8 − (0.3 × Cap [1])	October 8, 2012.[2]
		>15,000 Btu/h	EER = 9.3	October 8, 2012.[2]
	Non-Standard Size.	<7,000 Btu/h	EER = 9.4	October 7, 2010.
		≥7,000 Btu/h and ≤15,000 Btu/h	EER = 10.9 − (0.213 × Cap [1])	October 7, 2010.
		>15,000 Btu/h	EER = 7.7	October 7, 2010.

TABLE 5 TO § 431.97—MINIMUM EFFICIENCY STANDARDS FOR PTAC AND PTHP—Continued

Equipment type	Category	Cooling capacity	Efficiency level	Compliance date: products manufactured on and after . . .
PTHP	Standard Size	<7,000 Btu/h	EER = 11.9 COP = 3.3	October 8, 2012.
		≥7,000 Btu/h and ≤15,000 Btu/h	EER = 14.0 − (0.3 × Cap [1]) COP = 3.7 − (0.052 × Cap [1])	October 8, 2012.
		>15,000 Btu/h	EER = 9.5 COP = 2.9	October 8, 2012.
	Non-Standard Size.	<7,000 Btu/h	EER = 9.3 COP = 2.7	October 7, 2010.
		≥7,000 Btu/h and ≤15,000 Btu/h	EER = 10.8 − (0.213 × Cap [1]) COP = 2.9 − (0.026 × Cap [1])	October 7, 2010.
		>15,000 Btu/h	EER = 7.6 COP = 2.5	October 7, 2010.

[1] "Cap" means cooling capacity in thousand Btu/h at 95 °F outdoor dry-bulb temperature.
[2] And manufactured before January 1, 2017. See Table 6 of this section for updated efficiency standards that apply to this category of equipment manufactured on and after January 1, 2017.

TABLE 6 TO § 431.97—UPDATED MINIMUM EFFICIENCY STANDARDS FOR PTAC

Equipment type	Category	Cooling capacity	Efficiency level	Compliance date: products manufactured on and after . . .
PTAC	Standard Size	<7,000 Btu/h	EER = 11.9	January 1, 2017.
		≥7,000 Btu/h and ≤15,000 Btu/h	EER = 14.0 − (0.3 × Cap [1])	January 1, 2017.
		>15,000 Btu/h	EER = 9.5	January 1, 2017.

[1] "Cap" means cooling capacity in thousand Btu/h at 95 °F outdoor dry-bulb temperature.

(d)(1) Each single package vertical air conditioner and single package vertical heat pump manufactured on or after January 1, 2010, but before October 9, 2015 (for models ≥65,000 Btu/h and <135,000 Btu/h) or October 9, 2016 (for models ≥135,000 Btu/h and <240,000 Btu/h), must meet the applicable minimum energy conservation standard level(s) set forth in Table 7 of this section.

TABLE 7 TO § 431.97—MINIMUM EFFICIENCY STANDARDS FOR SINGLE PACKAGE VERTICAL AIR CONDITIONERS AND SINGLE PACKAGE VERTICAL HEAT PUMPS

Equipment type	Cooling capacity	Sub-category	Efficiency level	Compliance date: products manufactured on and after . . .
Single package vertical air conditioners and single package vertical heat pumps, single-phase and three-phase.	<65,000 Btu/h	AC	EER = 9.0	January 1, 2010
		HP	EER = 9.0 COP = 3.0	January 1, 2010
Single package vertical air conditioners and single package vertical heat pumps.	≥65,000 Btu/h and <135,000 Btu/h.	AC	EER = 8.9	January 1, 2010
		HP	EER = 8.9 COP = 3.0	January 1, 2010
Single package vertical air conditioners and single package vertical heat pumps.	≥135,000 Btu/h and <240,000 Btu/h.	AC	EER = 8.6	January 1, 2010
		HP	EER = 8.6 COP = 2.9	January 1, 2010

(2) Each single package vertical air conditioner and single package vertical heat pump manufactured on and after October 9, 2015 (for models ≥65,000 Btu/h and <135,000 Btu/h) or October 9, 2016 (for models ≥135,000 Btu/h and <240,000 Btu/h), but before September 23, 2019 must meet the applicable minimum energy conservation standard level(s) set forth in Table 8 of this section.

TABLE 8 TO § 431.97—MINIMUM EFFICIENCY STANDARDS FOR SINGLE PACKAGE VERTICAL AIR CONDITIONERS AND SINGLE PACKAGE VERTICAL HEAT PUMPS

Equipment type	Cooling capacity	Sub-category	Efficiency level	Compliance date: Products manufactured on and after . . .
Single package vertical air conditioners and single package vertical heat pumps, single-phase and three-phase.	<65,000 Btu/h	AC	EER = 9.0	January 1, 2010
		HP	EER = 9.0	January 1, 2010
			COP = 3.0	
Single package vertical air conditioners and single package vertical heat pumps.	≥65,000 Btu/h and <135,000 Btu/h.	AC	EER = 10.0	October 9, 2015
		HP	EER = 10.0	October 9, 2015
			COP = 3.0	
Single package vertical air conditioners and single package vertical heat pumps.	≥135,000 Btu/h and <240,000 Btu/h.	AC	EER = 10.0	October 9, 2016
		HP	EER = 10.0	October 9, 2016
			COP = 3.0	

(3) Each single package vertical air conditioner and single package vertical heat pump manufactured on and after September 23, 2019 must meet the applicable minimum energy conservation standard level(s) set forth in Table 9 of this section.

TABLE 9 TO § 431.97—UPDATED MINIMUM EFFICIENCY STANDARDS FOR SINGLE PACKAGE VERTICAL AIR CONDITIONERS AND SINGLE PACKAGE VERTICAL HEAT PUMPS

Equipment type	Cooling capacity	Sub-category	Efficiency level	Compliance date: products manufactured on and after . . .
Single package vertical air conditioners and single package vertical heat pumps, single-phase and three-phase.	<65,000 Btu/h	AC	EER = 11.0	September 23, 2019.
		HP	EER = 11.0	
			COP = 3.3	September 23, 2019.
Single package vertical air conditioners and single package vertical heat pumps.	≥65,000 Btu/h and <135,000 Btu/h.	AC	EER = 10.0	October 9, 2015.
		HP	EER = 10.0	October 9, 2015.
			COP = 3.0	
Single package vertical air conditioners and single package vertical heat pumps.	≥135,000 Btu/h and <240,000 Btu/h.	AC	EER = 10.0	October 9, 2016.
		HP	EER = 10.0	October 9, 2016.
			COP = 3.0	

(e) Each computer room air conditioner with a net sensible cooling capacity less than 65,000 Btu/h manufactured on or after October 29, 2012, and each computer room air conditioner with a net sensible cooling capacity greater than or equal to 65,000 Btu/h manufactured on or after October 29, 2013, must meet the applicable minimum energy efficiency standard level(s) set forth in this section.

TABLE 10 TO § 431.97—MINIMUM EFFICIENCY STANDARDS FOR COMPUTER ROOM AIR CONDITIONERS

Equipment type	Net sensible cooling capacity	Minimum SCOP efficiency		Compliance date: Products manufactured on and after . . .
		Downflow unit	Upflow unit	
Computer Room Air Conditioners, Air-Cooled.	<65,000 Btu/h	2.20	2.09	October 29, 2012.
	≥65,000 Btu/h and <240,000 Btu/h.	2.10	1.99	October 29, 2013.
	≥240,000 Btu/h and <760,000 Btu/h.	1.90	1.79	October 29, 2013.
Computer Room Air Conditioners, Water-Cooled.	<65,000 Btu/h	2.60	2.49	October 29, 2012.
	≥65,000 Btu/h and <240,000 Btu/h.	2.50	2.39	October 29, 2013.
	≥240,000 Btu/h and <760,000 Btu/h.	2.40	2.29	October 29, 2013.

TABLE 10 TO § 431.97—MINIMUM EFFICIENCY STANDARDS FOR COMPUTER ROOM AIR CONDITIONERS—Continued

Equipment type	Net sensible cooling capacity	Minimum SCOP efficiency		Compliance date: Products manufactured on and after . . .
		Downflow unit	Upflow unit	
Computer Room Air Conditioners, Water-Cooled with a Fluid Economizer.	<65,000 Btu/h	2.55	2.44	October 29, 2012.
	≥65,000 Btu/h and <240,000 Btu/h.	2.45	2.34	October 29, 2013.
	≥240,000 Btu/h and <760,000 Btu/h.	2.35	2.24	October 29, 2013.
Computer Room Air Conditioners, Glycol-Cooled.	<65,000 Btu/h	2.50	2.39	October 29, 2012.
	≥65,000 Btu/h and <240,000 Btu/h.	2.15	2.04	October 29, 2013.
	≥240,000 Btu/h and <760,000 Btu/h.	2.10	1.99	October 29, 2013.
Computer Room Air Conditioner, Glycol-Cooled with a Fluid Economizer.	<65,000 Btu/h	2.45	2.34	October 29, 2012.
	≥65,000 Btu/h and <240,000 Btu/h.	2.10	1.99	October 29, 2013.
	≥240,000 Btu/h and <760,000 Btu/h.	2.05	1.94	October 29, 2013.

(f) Each variable refrigerant flow air conditioner or heat pump manufactured on or after the compliance date listed in this table must meet the applicable minimum energy efficiency standard level(s) set forth in this section.

TABLE 11 TO § 431.97—MINIMUM EFFICIENCY STANDARDS FOR VARIABLE REFRIGERANT FLOW MULTI-SPLIT AIR CONDITIONERS AND HEAT PUMPS

Equipment type	Cooling capacity	Heating type[1]	Efficiency level	Compliance date: Products manufactured on and after . . .
VRF Multi-Split Air Conditioners (Air-Cooled).	<65,000 Btu/h	All	13.0 SEER	June 16, 2008.
	≥65,000 Btu/h and <135,000 Btu/h.	No Heating or Electric Resistance Heating.	11.2 EER	January 1, 2010.
		All Other Types of Heating.	11.0 EER	January 1, 2010.
	≥135,000 Btu/h and <240,000 Btu/h.	No Heating or Electric Resistance Heating.	11.0 EER	January 1, 2010.
		All Other Types of Heating.	10.8 EER	January 1, 2010.
	≥240,000 Btu/h and <760,000 Btu/h.	No Heating or Electric Resistance Heating.	10.0 EER	January 1, 2010.
		All Other Types of Heating.	9.8 EER	January 1, 2010.
VRF Multi-Split Heat Pumps (Air-Cooled)	<65,000 Btu/h	All	13.0 SEER 7.7 HSPF	June 16, 2008.
	≥65,000 Btu/h and <135,000 Btu/h.	No Heating or Electric Resistance Heating.	11.0 EER 3.3 COP	January 1, 2010.
		All Other Types of Heating.	10.8 EER 3.3 COP	January 1, 2010.
	≥135,000 Btu/h and <240,000 Btu/h.	No Heating or Electric Resistance Heating.	10.6 EER 3.2 COP	January 1, 2010.
		All Other Types of Heating.	10.4 EER 3.2 COP	January 1, 2010.
	≥240,000 Btu/h and <760,000 Btu/h.	No Heating or Electric Resistance Heating.	9.5 EER 3.2 COP	January 1, 2010.
		All Other Types of Heating.	9.3 EER 3.2 COP	January 1, 2010.
VRF Multi-Split Heat Pumps (Water-Source)* * *	<17,000 Btu/h	Without heat recovery.	12.0 EER 4.2 COP	October 29, 2012. October 29, 2003.

TABLE 11 TO § 431.97—MINIMUM EFFICIENCY STANDARDS FOR VARIABLE REFRIGERANT FLOW MULTI-SPLIT AIR CONDITIONERS AND HEAT PUMPS—Continued

Equipment type	Cooling capacity	Heating type[1]	Efficiency level	Compliance date: Products manufactured on and after . . .
		With heat recovery ..	11.8 EER ..... 4.2 COP	October 29, 2012. October 29, 2003.
	≥17,000 Btu/h and <65,000 Btu/h.	All	12.0 EER ..... 4.2 COP	October 29, 2003.
	≥65,000 Btu/h and <135,000 Btu/h.	All	12.0 EER ..... 4.2 COP	October 29, 2003.
	≥135,000 Btu/h and <760,000 Btu/h.	Without heat recovery.	10.0 EER ..... 3.9 COP	October 29, 2013.
		With heat recovery ..	9.8 EER ..... 3.9 COP	October 29, 2013

[1] VRF Multi-Split Heat Pumps (Air-Cooled) with heat recovery fall under the category of ''All Other Types of Heating'' unless they also have electric resistance heating, in which case it falls under the category for ''No Heating or Electric Resistance Heating.''

[77 FR 28991, May 16, 2012, as amended at 77 FR 76830, Dec. 31, 2012; 80 FR 42664, July 17, 2015; 80 FR 43212, July 21, 2015; 80 FR 56895, Sept. 21, 2015; 80 FR 57500, Sept. 23, 2015]

APPENDIX A TO SUBPART F OF PART 431—UNIFORM TEST METHOD FOR THE MEASUREMENT OF ENERGY CONSUMPTION OF AIR-COOLED SMALL (≥65,000 BTU/H), LARGE, AND VERY LARGE COMMERCIAL PACKAGE AIR CONDITIONING AND HEATING EQUIPMENT

Note: Prior to December 19, 2016, representations with respect to the energy use or efficiency of air-cooled small, large, and very large commercial package air conditioning and heating equipment, including compliance certifications, must be based on testing conducted in accordance with either Table 1 to § 431.96 as it now appears or Table 1 to § 431.96 as it appeared in subpart F of this part, in the 10 CFR parts 200 through 499 edition revised as of January 1, 2015. After December 19, 2016, representations with respect to energy use or efficiency of air-cooled small, large, and very large commercial package air conditioning and heating equipment, including compliance certifications, must be based on testing conducted in accordance with Table 1 to § 431.96 as it now appears.

(1) *Cooling mode test method*. The test method for cooling mode consists of the methods and conditions in AHRI 340/360–2007 sections 3, 4, and 6 (omitting section 6.3) (incorporated by reference; see § 431.95), and in ANSI/ASHRAE 37–2009 (incorporated by reference; see § 431.95). In case of a conflict between AHRI 340/360–2007 or ANSI/ASHRAE 37–2009 and the CFR, the CFR provisions control.

(2) *Heating mode test method*. The test method for heating mode consists of the methods and conditions in AHRI 340/360–2007 sections 3, 4, and 6 (omitting section 6.3) (incorporated by reference; see § 431.95), and in ANSI/ASHRAE 37–2009 (incorporated by reference; see § 431.95). In case of a conflict between AHRI 340/360–2007 or ANSI/ASHRAE 37–2009 and the CFR, the CFR provisions control.

(3) *Minimum external static pressure*. Use the certified cooling capacity for the basic model to choose the minimum external static pressure found in table 5 of section 6 of AHRI 340/360–2007 (incorporated by reference; see § 431.95) for testing.

(4) *Optional break-in period*. Manufacturers may optionally specify a ''break-in'' period, not to exceed 20 hours, to operate the equipment under test prior to conducting the test method in appendix A of this part. A manufacturer who elects to use an optional compressor break-in period in its certification testing must record this information (including the duration) as part of the information in the supplemental testing instructions under 10 CFR 429.43.

(5) *Additional provisions for equipment set-up*. The only additional specifications that may be used in setting up a unit for test are those set forth in the installation and operation manual shipped with the unit. Each unit should be set up for test in accordance with the manufacturer installation and operation manuals. Paragraphs (5)(i) through (ii) of this section provide specifications for addressing key information typically found in the installation and operation manuals.

(i) If a manufacturer specifies a range of superheat, sub-cooling, and/or refrigerant pressure in its installation and operation manual for a given basic model, any value(s) within that range may be used to determine refrigerant charge or mass of refrigerant, unless the manufacturer clearly specifies a rating value in its installation and operation

manual, in which case the specified rating value shall be used.

(ii) The airflow rate used for testing must be that set forth in the installation and operation manuals being shipped to the customer with the basic model and clearly identified as that used to generate the DOE performance ratings. If a certified airflow value for testing is not clearly identified, a value of 400 standard cubic feet per minute (scfm) per ton shall be used.

(6) *Indoor airflow testing and adjustment.* (i) When testing full-capacity cooling operation at the required external static pressure condition, the full-load indoor airflow rate must be within ± 3 percent of the certified-rated airflow at full-capacity cooling operation. If the indoor airflow rate at the required minimum external pressure is outside the ± 3-percent tolerance, the unit and/or test setup must be adjusted such that both the airflow and ESP are within the required tolerances. This process may include, but is not limited to, adjusting any adjustable motor sheaves, adjusting variable drive settings, or adjusting the code tester fan.

(ii) When testing other than full-capacity cooling operation using the full-load indoor airflow rate (*e.g.*, full-load heating), the full-load indoor airflow rate must be within ± 3 percent of the certified-rated full-load cooling airflow (without regard to the resulting external static pressure), unless the unit is designed to operate at a different airflow for cooling and heating mode. If necessary, a test facility setup may be made in order to maintain airflow within the required tolerance; however, no adjustments to the unit under test may be made.

(7) *Condenser head pressure controls.* Condenser head pressure controls, if typically shipped with units of the basic model by the manufacturer or available as an option to the basic model, must be active during testing.

(8) *Standard CFM.* In the referenced sections of AHRI 340/360–2007 (incorporated by reference; see § 431.95), all instances of CFM refer to standard CFM (SCFM). Likewise, all references to airflow or air quantity refer to standard airflow and standard air quantity.

(9) *Capacity rating at part-load.* When testing to determine EER for the part-load rating points (*i.e.* 75-percent load, 50-percent load, and 25-percent load), if the measured capacity expressed as a percent of full-load capacity for a given part-load test is within three percent above or below the target part-load percentage, the EER calculated for the test may be used without any interpolation to determine IEER.

(10) *Condenser air inlet temperature for part-load testing.* When testing to determine EER for the part-load rating points (*i.e.* 75-percent load, 50-percent load, and 25-percent load), the condenser air inlet temperature shall be calculated (using the equation in Table 6 of AHRI 340/360–2007; incorporated by reference; see § 431.95) for the target percent load rather than for the percent load measured in the test. Table 1 of this appendix shows the condenser air inlet temperature corresponding with each target percent load, as calculated using the equation in Table 6 of AHRI 340/360–2007.

TABLE 1 TO APPENDIX A TO SUBPART F OF PART 431—CONDENSER AIR INLET TEMPERATURES FOR PART-LOAD TESTS

Target percent load (%)	Condenser air inlet temperature (°F)
25	65
50	68
75	81.5

[80 FR 79670, Dec. 23, 2015]

EFFECTIVE DATE NOTE: At 80 FR 79670, Dec. 23, 2015, appendix A to subpart F of part 431 was added, effective Jan. 22, 2016.

Subpart G—Commercial Water Heaters, Hot Water Supply Boilers and Unfired Hot Water Storage Tanks

SOURCE: 69 FR 61983, Oct. 21, 2004, unless otherwise noted.

§ 431.101 Purpose and scope.

This subpart contains energy conservation requirements for certain commercial water heaters, hot water supply boilers and unfired hot water storage tanks, pursuant to Part C of Title III of the Energy Policy and Conservation Act, as amended, 42 U.S.C. 6311–6317.

[69 FR 61983, Oct. 21, 2004, as amended at 70 FR 60415, Oct. 18, 2005]

§ 431.102 Definitions concerning commercial water heaters, hot water supply boilers, and unfired hot water storage tanks.

The following definitions apply for purposes of this subpart G, and of subparts J through M of this part. Any words or terms not defined in this section or elsewhere in this part shall be defined as provided in section 340 of the Act, 42 U.S.C. 6311.

ASTM–D–2156–80 means the test standard published in 1980 by the

American Society of Testing and Measurements and titled Method for Smoke Density in Flue Gases from Burning Distillate Fuels.

Basic model means all water heaters, hot water supply boilers, or unfired hot water storage tanks manufactured by one manufacturer within a single equipment class, having the same primary energy source (e.g., gas or oil) and that have essentially identical electrical, physical and functional characteristics that affect energy efficiency.

Hot water supply boiler means a packaged boiler that is industrial equipment and that,

(1) Has an input rating from 300,000 Btu/hr to 12,500,000 Btu/hr and of at least 4,000 Btu/hr per gallon of stored water,

(2) Is suitable for heating potable water, and

(3) Meets either or both of the following conditions:

(i) It has the temperature and pressure controls necessary for heating potable water for purposes other than space heating, or

(ii) The manufacturer's product literature, product markings, product marketing, or product installation and operation instructions indicate that the boiler's intended uses include heating potable water for purposes other than space heating.

Instantaneous water heater means a water heater that has an input rating not less than 4,000 Btu/hr per gallon of stored water, and that is industrial equipment, including products meeting this description that are designed to heat water to temperatures of 180 °F or higher.

Packaged boiler means a boiler that is shipped complete with heating equipment, mechanical draft equipment and automatic controls; usually shipped in one or more sections and does not include a boiler that is custom designed and field constructed. If the boiler is shipped in more than one section, the sections may be produced by more than one manufacturer, and may be originated or shipped at different times and from more than one location.

R-value means the thermal resistance of insulating material as determined based on ASTM Standard Test Method C177–97 or C518–91 and expressed in (°F·ft^2·h/Btu).

Residential-duty commercial water heater means any gas-fired, electric, or oil storage or instantaneous commercial water heater that meets the following conditions:

(1) For models requiring electricity, uses single-phase external power supply;

(2) Is not designed to provide outlet hot water at temperatures greater than 180 °F; and

(3) Does not meet any of the following criteria:

Water heater type	Indicator of non-residential application
Gas-fired Storage	Rated input >105 kBtu/h; Rated storage volume >120 gallons.
Oil-fired Storage ..	Rated input >140 kBtu/h; Rated storage volume >120 gallons.
Electric Storage ...	Rated input >12 kW; Rated storage volume >120 gallons.
Heat Pump with Storage.	Rated input >12 kW; Rated current >24 A at a rated voltage of not greater than 250 V; Rated storage volume >120 gallons.
Gas-fired Instantaneous.	Rated input >200 kBtu/h; Rated storage volume >2 gallons.
Electric Instantaneous.	Rated input >58.6 kW; Rated storage volume >2 gallons.
Oil-fired Instantaneous.	Rated input >210 kBtu/h; Rated storage volume >2 gallons.

Standby loss means the average hourly energy required to maintain the stored water temperature, expressed as applicable either (1) as a percentage (per hour) of the heat content of the stored water and determined by the formula for S given in Section 2.10 of ANSI Z21.10.3–1998, denoted by the term ''S,'' or (2) in Btu per hour based on a 70 °F temperature differential between stored water and the ambient temperature, denoted by the term ''SL.''

Storage water heater means a water heater that heats and stores water within the appliance at a thermostatically controlled temperature for delivery on demand and that is industrial equipment. Such term does not include units with an input rating of 4,000 Btu/hr or more per gallon of stored water.

Tank surface area means, for the purpose of determining portions of a tank requiring insulation, those areas of a storage tank, including hand holes and manholes, in its uninsulated or pre-insulated state, that do not have pipe penetrations or tank supports attached.

Thermal efficiency for an instantaneous water heater, a storage water heater or a hot water supply boiler means the ratio of the heat transferred to the water flowing through the water heater to the amount of energy consumed by the water heater as measured during the thermal efficiency test procedure prescribed in this subpart.

Unfired hot water storage tank means a tank used to store water that is heated externally, and that is industrial equipment.

[69 FR 61983, Oct. 21, 2004, as amended at 76 FR 12503, Mar. 7, 2011; 78 FR 79599, Dec. 31, 2013; 79 FR 40586, July 11, 2014]

§ 431.104 Sources for information and guidance.

(a) *General.* The standards listed in this paragraph are referred to in the DOE test procedures and elsewhere in this part but are not incorporated by reference. These sources are given here for information and guidance.

(b) *ASTM.* American Society for Testing and Materials, 100 Barr Harbor Drive, PO Box C700, West Conshohocken, PA, 19438–2959, 1–(877) 909–2786, or go to: *http://www.astm.org/index.shtml.*

(1) ASTM Standard Test Method C177–97, ''Standard Test Method for Steady-State Heat Flux Measurements and Thermal Transmission Properties by Means of the Guarded-Hot-Plate Apparatus.''

(2) ASTM Standard Test Method C518–91, ''Standard Test Method for Steady-State Heat Flux Measurements and Thermal Transmission Properties by Means of the Heat Flow Meter Apparatus.''

(3) ASTM Standard Test Method D2156–80, ''Method for Smoke Density in Flue Gases from Burning Distillate Fuels.''

[77 FR 28995, May 16, 2012]

TEST PROCEDURES

§ 431.105 Materials incorporated by reference.

(a) *General.* DOE incorporates by reference the following test procedures into subpart G of part 431. The materials listed have been approved for incorporation by reference by the Director of the Federal Register in accordance with 5 U.S.C. 552(a) and 1 CFR part 51. Any subsequent amendment to the listed materials by the standard-setting organization will not affect the DOE regulations unless and until such regulations are amended by DOE. Materials are incorporated as they exist on the date of the approval, and a notice of any change in the materials will be published in the FEDERAL REGISTER. All approved materials are available for inspection at the National Archives and Records Administration (NARA). For information on the availability of this material at NARA, call (202) 741–6030, or go to: *http://www.archives.gov/federal_register/code_of_federal_regulations/ibr_locations.html.* Also, this material is available for inspection at U.S. Department of Energy, Office of Energy Efficiency and Renewable Energy, Building Technologies Program, 6th Floor, 950 L'Enfant Plaza, SW., Washington, DC 20024, (202) 586–2945, or go to: *http://www1.eere.energy.gov/buildings/appliance_standards* The referenced test procedure standards are listed below by relevant standard-setting organization, along with information on how to obtain copies from those sources.

(b) *ANSI.* American National Standards Institute, 25 W. 43rd Street, 4th Floor, New York, NY 10036, (212) 642–4900, or go to: *http://www.ansi.org.*

(1) ANSI Z21.10.3–1998 (''ANSI Z21.10.3–1998''), ''*Gas Water Heaters, Volume III, Storage Water Heaters With Input Ratings Above 75,000 Btu Per Hour, Circulating and Instantaneous,* Z21.10.3–1998, CSA 4.3–M98, and its Addenda, ANSI Z21.10.3a–2000, CSA 4.3a–M00,'' approved by ANSI on October 18, 1999, IBR approved for § 431.106.

(2) ANSI Z21.10.3–2011 (''ANSI Z21.10.3–2011''), ''*Gas Water Heaters, Volume III, Storage Water Heaters With Input Ratings Above 75,000 Btu Per Hour, Circulating and Instantaneous,*'' approved on March 7, 2011, IBR approved for § 431.106.

(3) [Reserved]

[77 FR 28996, May 16, 2012]

§ 431.106 Uniform test method for the measurement of energy efficiency of commercial water heaters and hot water supply boilers (other than commercial heat pump water heaters).

(a) *Scope*. This section covers the test procedures you must follow if, pursuant to EPCA, you are measuring the thermal efficiency or standby loss, or both, of a storage or instantaneous water heater or hot water supply boiler (other than a commercial heat pump water heater).

(b) *Testing and Calculations*. Determine the energy efficiency of each covered product by conducting the test procedure(s), set forth in the two rightmost columns of the following table, that apply to the energy efficiency descriptor(s) for that product:

TABLE 1 TO § 431.106—TEST PROCEDURES FOR COMMERCIAL WATER HEATERS AND HOT WATER SUPPLY BOILERS

[Other than commercial heat pump water heaters]

Equipment type	Energy efficiency descriptor	Use test setup, equipment and procedures in subsection labeled "Method of Test" of	Test procedure required for compliance until	With these additional stipulations
Gas-fired Storage and Instantaneous Water Heaters and Hot Water Supply Boilers *.	Thermal Efficiency Standby Loss	ANSI Z21.10.3–1998 **, § 2.9. ANSI Z21.10.3–1998 **, § 2.10.	May 13, 2013 ..... May 13, 2013	A. For all products, the duration of the standby loss test shall be until whichever of the following occurs first after you begin to measure the fuel and/or electric consumption: (1) The first cutout after 24 hours or (2) 48 hours, if the water heater is not in the heating mode at that time. B. For oil and gas products, the standby loss in Btu per hour must be calculated as follows: SL (Btu per hour) = S (% per hour) × 8.25 (Btu/gal-F) × Measured Volume (gal) × 70 (degrees F).

TABLE 1 TO §431.106—TEST PROCEDURES FOR COMMERCIAL WATER HEATERS AND HOT WATER SUPPLY BOILERS—Continued

[Other than commercial heat pump water heaters]

Equipment type	Energy efficiency descriptor	Use test setup, equipment and procedures in subsection labeled "Method of Test" of	Test procedure required for compliance until	With these additional stipulations
				C. For oil-fired products, apply the following in conducting the thermal efficiency and standby loss tests: (1) Venting Requirements—Connect a vertical length of flue pipe to the flue gas outlet of sufficient height so as to meet the minimum draft specified by the manufacturer. (2) Oil Supply—Adjust the burner rate so that: (a) The hourly Btu input rate lies within ±2 percent of the manufacturer's specified input rate, (b) the CO_2 reading shows the value specified by the manufacturer, (c) smoke in the flue does not exceed No. 1 smoke as measured by the procedure in ASTM–D–2156–80, and (d) fuel pump pressure lies within ±10 percent of manufacturer's specifications. D. For electric products, apply the following in conducting the standby loss test: (1) Assume that the thermal efficiency (Et) of electric water heaters with immersed heating elements is 98 percent. (2) Maintain the electrical supply voltage to within ±5 percent of the center of the voltage range specified on the water heater nameplate. (3) If the set up includes multiple adjustable thermostats, set the highest one first to yield a maximum water temperature in the specified range as measured by the topmost tank thermocouple. Then set the lower thermostat(s) to yield a maximum mean tank temperature within the specified range.

TABLE 1 TO § 431.106—TEST PROCEDURES FOR COMMERCIAL WATER HEATERS AND HOT WATER SUPPLY BOILERS—Continued

[Other than commercial heat pump water heaters]

Equipment type	Energy efficiency descriptor	Use test setup, equipment and procedures in subsection labeled "Method of Test" of	Test procedure required for compliance until	With these additional stipulations
				E. Install water-tube water heaters as shown in Figure 2, "Arrangement for Testing Water-tube Type Instantaneous and Circulating Water Heaters."

* As to hot water supply boilers with a capacity of less than 10 gallons, these test methods become mandatory on October 21, 2005. Prior to that time, you may use for these products either (1) these test methods if you rate the product for thermal efficiency, or (2) the test methods in Subpart E if you rate the product for combustion efficiency as a commercial packaged boiler.

** Incorporated by reference, see § 431.105.

TABLE 2 TO § 431.106—TEST PROCEDURES FOR COMMERCIAL WATER HEATERS AND HOT WATER SUPPLY BOILERS

[Other Than Commercial Heat Pump Water Heaters]

Equipment type	Energy efficiency descriptor	Test procedure	Test procedure required for compliance on and after	With these additional stipulations
Residential-Duty Commercial Water Heater.	Uniform Energy Factor.	10 CFR Part 430, Subpart B, Appendix E.	December 31, 2015***	None.
Gas-fired Storage and Instantaneous Water Heaters and Hot Water Supply Boilers*.	Thermal Efficiency.	Use test set-up, equipment, and procedures in subsection labeled "Method of Test" of ANSI Z21.10.3–2011**, Exhibit G1.	May 13, 2013	A. For all products, the duration of the standby loss test shall be until whichever of the following occurs first after you begin to measure the fuel and/or electric consumption: (1) The first cut-out after 24 hours or (2) 48 hours, if the water heater is not in the heating mode at that time.
	Standby Loss	Use test set-up, equipment, and procedures in subsection labeled "Method of Test" of ANSI Z21.10.3–2011**, Exhibit G2.	May 13, 2013	B. For oil and gas products, the standby loss in Btu per hour must be calculated as follows: SL (Btu per hour) = S (% per hour) × 8.25 (Btu/gal-F) × Measured Volume (gal) × 70 (degrees F).
Oil-fired Storage and Instantaneous Water Heaters and Hot Water Supply Boilers*.	Thermal Efficiency.	ANSI Z21.10.3–2011**, Exhibit G1.	May 13, 2013	C. For oil-fired products, apply the following in conducting the thermal efficiency and standby loss tests: (1) Venting Requirements—Connect a vertical length of flue pipe to the flue gas outlet of sufficient height so as to meet the minimum draft specified by the manufacturer. (2) Oil Supply—Adjust the burner rate so that: (a) The hourly Btu input rate lies within ±2 percent of the manufacturer's specified input rate, (b) the CO_2 reading shows the value specified by the manufacturer, (c) smoke in the flue does not exceed No. 1 smoke as measured by the procedure in ASTM–D2156–80 (reference for guidance only, see § 431.104), and (d) fuel pump pressure lies within ±10 percent of manufacturer's specifications.
	Standby Loss	Use test set-up, equipment, and procedures in subsection labeled "Method of Test" of ANSI Z21.10.3–2011**, Exhibit G2.	May 13, 2013	

TABLE 2 TO §431.106—TEST PROCEDURES FOR COMMERCIAL WATER HEATERS AND HOT WATER SUPPLY BOILERS—Continued

[Other Than Commercial Heat Pump Water Heaters]

Equipment type	Energy efficiency descriptor	Test procedure	Test procedure required for compliance on and after	With these additional stipulations
Electric Storage and Instantaneous Water Heaters.	Standby Loss	Use test set-up, equipment, and procedures in subsection labeled "Method of Test" of ANSI Z21.10.3–2011**, Exhibit G2.	May 13, 2013	D. For electric products, apply the following in conducting the standby loss test: (1) Assume that the thermal efficiency (Et) of electric water heaters with immersed heating elements is 98 percent. (2) Maintain the electrical supply voltage to within ±5 percent of the center of the voltage range specified on the water heater nameplate. (3) If the set up includes multiple adjustable thermostats, set the highest one first to yield a maximum water temperature in the specified range as measured by the topmost tank thermocouple. Then set the lower thermostat(s) to yield a maximum mean tank temperature within the specified range. E. Install water-tube water heaters as shown in Figure 2, "Arrangement for Testing Water-tube Type Instantaneous and Circulating Water Heaters."

*As to hot water supply boilers with a capacity of less than 10 gallons, these test methods become mandatory on October 21, 2005. Prior to that time, you may use for these products either (1) these test methods if you rate the product for thermal efficiency, or (2) the test methods in subpart E if you rate the product for combustion efficiency as a commercial packaged boiler.

**Incorporated by reference, *see* §431.105.

***Because the statute permits use of a conversion factor until the later of December 31, 2015 or one year after publication of a conversion factor final rule, DOE may amend the mandatory compliance date for use of this amended test procedure, as necessary.

[77 FR 28996, May 16, 2012, as amended at 79 FR 40586, July 11, 2014]

§431.107 Uniform test method for the measurement of energy efficiency of commercial heat pump water heaters.

TABLE 1 TO §431.107—TEST PROCEDURES FOR COMMERCIAL HEAT PUMP WATER HEATERS

Equipment type	Energy efficiency descriptor	Use test set-up, equipment, and procedures in subsection labeled "Method of Test" of	Test procedure required for compliance on and after
Residential-Duty Heat Pump Water Heater with Integrated Storage Tank.	Uniform Energy Factor	10 CFR Part 430, Subpart B, Appendix E.	December 31, 2015*.
All Other Types	[Reserved]	[Reserved]	[Reserved].

*Because the statute permits use of a conversion factor until the later of December 31, 2015 or one year after publication of a conversion factor final rule, DOE may amend the mandatory compliance date for use of this amended test procedure, as necessary.

[79 FR 40587, July 11, 2014]

ENERGY CONSERVATION STANDARDS

§ 431.110 Energy conservation standards and their effective dates.

Each commercial storage water heater, instantaneous water heater, unfired hot water storage tank and hot water supply boiler[1] must meet the applicable energy conservation standard level(s) as follows:

Equipment category	Size	Energy conservation standard[a]		
		Maximum standby loss[c] (equipment manufactured on and after October 29, 2003)[b]	Minimum thermal efficiency (equipment manufactured on and after October 29, 2003 and before October 9, 2015)[b]	Minimum thermal efficiency (equipment manufactured on and after October 9, 2015)[b]
Electric storage water heaters	All	$0.30 + 27/V_m$ (%/hr)	N/A	N/A
Gas-fired storage water heaters	≤155,000 Btu/hr	$Q/800 + 110(V_r)^{1/2}$ (Btu/hr)	80%	80%
	>155,000 Btu/hr	$Q/800 + 110(V_r)^{1/2}$ (Btu/hr)	80%	80%
Oil-fired storage water heaters	≤155,000 Btu/hr	$Q/800 + 110(V_r)^{1/2}$ (Btu/hr)	78%	80%
	>155,000 Btu/hr	$Q/800 + 110(V_r)^{1/2}$ (Btu/hr)	78%	80%
Gas-fired instantaneous water heaters and hot water supply boilers.	<10 gal	N/A	80%	80%
	≥10 gal	$Q/800 + 110(V_r)^{1/2}$ (Btu/hr)	80%	80%
Oil-fired instantaneous water heaters and hot water supply boilers.	<10 gal	N/A	80%	80%
	≥10 gal	$Q/800 + 110(V_r)^{1/2}$ (Btu/hr)	78%	78%

Equipment Category	Size	Minimum thermal insulation
Unfired hot water storage tank	All	R–12.5

[a] V_m is the measured storage volume, and V_r is the rated volume, both in gallons. Q is the nameplate input rate in Btu/hr.

[b] For hot water supply boilers with a capacity of less than 10 gallons: (1) The standards are mandatory for products manufactured on and after October 21, 2005, and (2) products manufactured prior to that date, and on or after October 23, 2003, must meet either the standards listed in this table or the applicable standards in subpart E of this part for a "commercial packaged boiler."

[c] Water heaters and hot water supply boilers having more than 140 gallons of storage capacity need not meet the standby loss requirement if: (1) The tank surface area is thermally insulated to R–12.5 or more; (2) a standing pilot light is not used; and (3) for gas or oil-fired storage water heaters, they have a fire damper or fan assisted combustion.

[69 FR 61983, Oct. 21, 2004; 69 FR 63574, Nov. 2, 2004, as amended at 80 FR 42667, July 17, 2015]

Subpart H—Automatic Commercial Ice Makers

SOURCE: 70 FR 60415, Oct. 18, 2005, unless otherwise noted.

§ 431.131 Purpose and scope.

This subpart contains energy conservation requirements for commercial ice makers, pursuant to Part C of Title III of the Energy Policy and Conservation Act, as amended, 42 U.S.C. 6311–6317.

§ 431.132 Definitions concerning automatic commercial ice makers.

Automatic commercial ice maker means a factory-made assembly (not necessarily shipped in 1 package) that—

(1) Consists of a condensing unit and ice-making section operating as an integrated unit, with means for making and harvesting ice; and

(2) May include means for storing ice, dispensing ice, or storing and dispensing ice.

Basic model means all units of a given type of covered product (or class thereof) manufactured by one manufacturer, having the same primary energy source, and which have essentially

[1] Any packaged boiler that provides service water, that meets the definition of ''commercial packaged boiler'' in subpart E of this part, but does not meet the definition of '' hot water supply boiler'' in subpart G, must meet the requirements that apply to it under subpart E.

identical electrical, physical, and functional (or hydraulic) characteristics that affect energy consumption, energy efficiency, water consumption, or water efficiency.

Batch type ice maker means an ice maker having alternate freezing and harvesting periods. This includes automatic commercial ice makers that produce cube type ice and other batch technologies. Referred to as cubes type ice maker in AHRI 810 (incorporated by reference, see §431.133).

Continuous type ice maker means an ice maker that continually freezes and harvests ice at the same time.

Cube type ice means ice that is fairly uniform, hard, solid, usually clear, and generally weighs less than two ounces (60 grams) per piece, as distinguished from flake, crushed, or fragmented ice. Note that this conflicts and takes precedence over the definition established in AHRI 810 (incorporated by reference, see §431.133), which indicates that ''cube'' does not reference a specific size or shape.

Energy use means the total energy consumed, stated in kilowatt hours per one-hundred pounds (kWh/100 lb) of ice stated in multiples of 0.1. For remote condensing (but not remote compressor) automatic commercial ice makers and remote condensing and remote compressor automatic commercial ice makers, total energy consumed shall include the energy use of the ice-making mechanism, the compressor, and the remote condenser or condensing unit.

Harvest rate means the amount of ice (at 32 degrees F) in pounds produced per 24 hours.

Ice hardness factor means the latent heat capacity of harvested ice, in British thermal units per pound of ice (Btu/lb), divided by 144 Btu/lb, expressed as a percent.

Ice-making head means automatic commercial ice makers that do not contain integral storage bins, but are generally designed to accommodate a variety of bin capacities. Storage bins entail additional energy use not included in the reported energy consumption figures for these units.

Maximum condenser water use means the maximum amount of water used by the condensing unit (if water-cooled), stated in gallons per 100 pounds (gal/100 lb) of ice, in multiples of 1.

Remote compressor means a type of automatic commercial ice maker in which the ice-making mechanism and compressor are in separate sections.

Remote condensing means a type of automatic commercial ice maker in which the ice-making mechanism and condenser or condensing unit are in separate sections.

Self-contained means a type of automatic commercial ice maker in which the ice-making mechanism and storage compartment are in an integral cabinet.

[70 FR 60415, Oct. 18, 2005, as amended at 71 FR 71371, Dec. 8, 2006; 76 FR 12503, Mar. 7, 2011; 77 FR 1613, Jan. 11, 2012]

TEST PROCEDURES

§431.133 Materials incorporated by reference.

(a) *General.* We incorporate by reference the following standards into Subpart H of Part 431. The material listed has been approved for incorporation by reference by the Director of the Federal Register in accordance with 5 U.S.C. 552(a) and 1 CFR part 51. Any subsequent amendment to a standard by the standard-setting organization will not affect the DOE regulations unless and until amended by DOE. Material is incorporated as it exists on the date of the approval and a notice of any change in the material will be published in the FEDERAL REGISTER. All approved material is available for inspection at the U.S. Department of Energy, Office of Energy Efficiency and Renewable Energy, Building Technologies Program, 6th Floor, 950 L'Enfant Plaza SW., Washington, DC 20024, (202) 586–2945, or go to: *http://www1.eere.energy.gov/buildings/appliance_standards/*. Also, this material is available for inspection at National Archives and Records Administration (NARA). For information on the availability of this material at NARA, call (202) 741–6030 or go to *http://www.archives.gov/federal_register/code_of_federal_regulations/ibr_locations.html*. Standards can be obtained from the sources listed below.

(b) *AHRI*. Air-Conditioning, Heating, and Refrigeration Institute, 2111 Wilson Blvd., Suite 500, Arlington, VA 22201, (703) 524–8800, *ahri@ahrinet.org*, or *http://www.ahrinet.org*.

(1) AHRI Standard 810–2007 with Addendum 1, (''AHRI 810''), *Performance Rating of Automatic Commercial Ice-Makers*, March 2011; IBR approved for §§ 431.132 and 431.134.

(2) [Reserved]

(c) *ASHRAE*. American Society of Heating, Refrigerating and Air-Conditioning Engineers, Inc., 1791 Tullie Circle NE., Atlanta, GA 30329, (404) 636–8400, *ashrae@ashrae.org*, or *http://www.ashrae.org*.

(1) ANSI/ASHRAE Standard 29–2009, (''ANSI/ASHRAE 29''), *Method of Testing Automatic Ice Makers*, (including Errata Sheets issued April 8, 2010 and April 21, 2010), approved January 28, 2009; IBR approved for § 431.134.

(2) [Reserved]

[77 FR 1613, Jan. 11, 2012]

§ 431.134 Uniform test methods for the measurement of energy and water consumption of automatic commercial ice makers.

(a) *Scope*. This section provides the test procedures for measuring, pursuant to EPCA, the energy use in kilowatt hours per 100 pounds of ice (kWh/100 lb ice) and the condenser water use in gallons per 100 pounds of ice (gal/100 lb ice) of automatic commercial ice makers with capacities between 50 and 4,000 pounds of ice per 24 hours.

(b) *Testing and Calculations*. Measure the energy use and the condenser water use of each covered product by conducting the test procedures set forth in AHRI 810, section 3, ''Definitions,'' section 4, ''Test Requirements,'' and section 5, ''Rating Requirements'' (incorporated by reference, see § 431.133). Where AHRI 810 references ''ASHRAE Standard 29,'' ANSI/ASHRAE Standard 29–2009 (incorporated by reference, see § 431.133) shall be used. All references to cube type ice makers in AHRI 810 apply to all batch type automatic commercial ice makers.

(1) For batch type automatic commercial ice makers, the energy use and condenser water use will be reported as measured in this paragraph (b), including the energy and water consumption, as applicable, of the ice-making mechanism, the compressor, and the condenser or condensing unit.

(2)(i) For continuous type automatic commercial ice makers, determine the energy use and condenser water use by multiplying the energy consumption or condenser water use as measured in this paragraph (b) by the ice hardness adjustment factor, determined using the following equation:

$$\text{Ice Hardness Adjustment Factor} = \left[\frac{144\,{}^{\text{Btu}}/_{\text{lb}} + 38\,{}^{\text{Btu}}/_{\text{lb}}}{144\,{}^{\text{Btu}}/_{\text{lb}} \times \left({}^{\text{Ice Hardness Factor}}/_{100}\right) + 38\,{}^{\text{Btu}}/_{\text{lb}}}\right]$$

(ii) Determine the ice hardness factor by following the procedure specified in the ''Procedure for Determining Ice Quality'' in section A.3 of normative annex A of ANSI/ASHRAE 29 (incorporated by reference, see § 431.133), except that the test shall be conducted at an ambient air temperature of 70 °F ±1 °F, with an initial water temperature of 90 °F ±1 °F, and weights shall be accurate to within ±2 percent of the quantity measured. The ice hardness factor is equivalent to the corrected net cooling effect per pound of ice, line 19 in ANSI/ASHRAE 29 Table A1, where the calorimeter constant used in line 18 shall be that determined in section A2 using seasoned, block ice.

[77 FR 1613, Jan. 11, 2012]

ENERGY CONSERVATION STANDARDS

§ 431.136 Energy conservation standards and their effective dates.

(a) All basic models of commercial ice makers must be tested for performance using the applicable DOE test procedure in § 431.134, be compliant with the applicable standards set forth in

paragraphs (b) through (d) of this section, and be certified to the Department of Energy under 10 CFR part 429 of this chapter.

(b) Each cube type automatic commercial ice maker with capacities between 50 and 2,500 pounds per 24-hour period manufactured on or after January 1, 2010 and before January 28, 2018, shall meet the following standard levels:

Equipment type	Type of cooling	Harvest rate lb ice/24 hours	Maximum energy use kWh/100 lb ice	Maximum condenser water use [1] gal/100 lb ice
Ice-Making Head	Water	<500	7.8–0.0055H [2]	200–0.022H.
Ice-Making Head	Water	≥500 and <1,436	5.58–0.0011H	200–0.022H.
Ice-Making Head	Water	≥1,436	4.0	200–0.022H.
Ice-Making Head	Air	<450	10.26–0.0086H	Not Applicable.
Ice-Making Head	Air	≥450	6.89–0.0011H	Not Applicable.
Remote Condensing (but not remote compressor)	Air	<1,000	8.85–0.0038H	Not Applicable.
Remote Condensing (but not remote compressor)	Air	≥1,000	5.1	Not Applicable.
Remote Condensing and Remote Compressor	Air	<934	8.85–0.0038H	Not Applicable.
Remote Condensing (but not remote compressor)	Air	≥934	5.3	Not Applicable.
Self-Contained	Water	<200	11.40–0.019H	191–0.0315H.
Self-Contained	Water	≥200	7.6	191–0.0315H.
Self-Contained	Air	<175	18.0–0.0469H	Not Applicable.
Self-Contained	Air	≥175	9.8	Not Applicable.

[1] Water use is for the condenser only and does not include potable water used to make ice.
[2] H = harvest rate in pounds per 24 hours, indicating the water or energy use for a given harvest rate.
Source: 42 U.S.C. 6313(d).

(c) Each batch type automatic commercial ice maker with capacities between 50 and 4,000 pounds per 24-hour period manufactured on or after January 28, 2018, shall meet the following standard levels:

Equipment type	Type of cooling	Harvest rate lb ice/24 hours	Maximum energy use kilowatt-hours (kWh)/100 lb ice [1]	Maximum condenser water use gal/100 lb ice [2]
Ice-Making Head	Water	< 300	6.88–0.0055H	200–0.022H.
Ice-Making Head	Water	≥300 and <850	5.80–0.00191H	200–0.022H.
Ice-Making Head	Water	≥850 and <1,500	4.42–0.00028H	200–0.022H.
Ice-Making Head	Water	≥1,500 and <2,500	4.0	200–0.022H.
Ice-Making Head	Water	≥2,500 and <4,000	4.0	145.
Ice-Making Head	Air	< 300	10–0.01233H	NA.
Ice-Making Head	Air	≥ 300 and < 800	7.05–0.0025H	NA.
Ice-Making Head	Air	≥ 800 and < 1,500	5.55–0.00063H	NA.
Ice-Making Head	Air	≥ 1500 and < 4,000	4.61	NA.
Remote Condensing (but not remote compressor)	Air	< 988	7.97–0.00342H	NA.
Remote Condensing (but not remote compressor)	Air	≥ 988 and < 4,000	4.59	NA.
Remote Condensing and Remote Compressor	Air	< 930	7.97–0.00342H	NA.
Remote Condensing and Remote Compressor	Air	≥ 930 and < 4,000	4.79	NA.
Self-Contained	Water	< 200	9.5–0.019H	191–0.0315H.
Self-Contained	Water	≥ 200 and < 2,500	5.7	191–0.0315H.
Self-Contained	Water	≥ 2,500 and < 4,000	5.7	112.
Self-Contained	Air	< 110	14.79–0.0469H	NA.
Self-Contained	Air	≥ 110 and < 200	12.42–0.02533H	NA.
Self-Contained	Air	≥ 200 and < 4,000	7.35	NA.

[1] H = harvest rate in pounds per 24 hours, indicating the water or energy use for a given harvest rate. Source: 42 U.S.C. 6313(d).
[2] Water use is for the condenser only and does not include potable water used to make ice.

(d) Each continuous type automatic commercial ice maker with capacities between 50 and 4,000 pounds per 24-hour period manufactured on or after January 28, 2018, shall meet the following standard levels:

Equipment type	Type of cooling	Harvest rate lb ice/24 hours	Maximum energy use kWh/100 lb ice [1]	Maximum condenser water use gal/100 lb ice [2]
Ice-Making Head	Water	<801	6.48–0.00267H	180–0.0198H.
Ice-Making Head	Water	≥801 and <2,500	4.34	180–0.0198H.
Ice-Making Head	Water	≥2,500 and <4,000	4.34	130.5.
Ice-Making Head	Air	<310	9.19–0.00629H	NA.
Ice-Making Head	Air	≥310 and <820	8.23–0.0032H	NA.
Ice-Making Head	Air	≥820 and <4,000	5.61	NA.
Remote Condensing (but not remote compressor)	Air	<800	9.7–0.0058H	NA.
Remote Condensing (but not remote compressor)	Air	≥800 and <4,000	5.06	NA.
Remote Condensing and Remote Compressor	Air	<800	9.9–0.0058H	NA.
		≥800 and <4,000	5.26	NA.
Self-Contained	Water	<900	7.6–0.00302H	153–0.0252H.
Self-Contained	Water	≥900 and <2,500	4.88	153–0.0252H.
Self-Contained	Water	≥2,500 and <4,000	4.88	90.
Self-Contained	Air	<200	14.22–0.03H	NA.
Self-Contained	Air	≥200 and <700	9.47–0.00624H	NA.
Self-Contained	Air	≥700 and <4,000	5.1	NA.

[1] H = harvest rate in pounds per 24 hours, indicating the water or energy use for a given harvest rate. Source: 42 U.S.C. 6313(d).
[2] Water use is for the condenser only and does not include potable water used to make ice.

[80 FR 4754, Jan. 28, 2015]

Subpart I—Commercial Clothes Washers

SOURCE: 70 FR 60416, Oct. 18, 2005, unless otherwise noted.

§ 431.151 Purpose and scope.

This subpart contains energy conservation requirements for commercial clothes washers, pursuant to Part C of Title III of the Energy Policy and Conservation Act, as amended, 42 U.S.C. 6311–6317.

§ 431.152 Definitions concerning commercial clothes washers.

Basic model means all units of a given type of covered product (or class thereof) manufactured by one manufacturer, having the same primary energy source, and which have essentially identical electrical, physical, and functional (or hydraulic) characteristics that affect energy consumption, energy efficiency, water consumption, or water efficiency.

Commercial clothes washer means a soft-mounted front-loading or soft-mounted top-loading clothes washer that—

(1) Has a clothes container compartment that—

(i) For horizontal-axis clothes washers, is not more than 3.5 cubic feet; and

(ii) For vertical-axis clothes washers, is not more than 4.0 cubic feet; and

(2) Is designed for use in—

(i) Applications in which the occupants of more than one household will be using the clothes washer, such as multi-family housing common areas and coin laundries; or

(ii) Other commercial applications.

IWF means integrated water factor, in gallons per cubic feet per cycle (gal/cu ft/cycle), as determined in section 4.2.13 of Appendix J2 to subpart B of 10 CFR part 430.

MEF means modified energy factor, in cubic feet per kilowatt hour per cycle (cu ft/kWh/cycle), as determined in section 4.4 of Appendix J1 to subpart B of part 430.

MEF_{J2} means modified energy factor, in cu ft/kWh/cycle, as determined in section 4.5 of Appendix J2 to subpart B of part 430.

WF means water factor, in gal/cu ft/cycle, as determined in section 4.2.3 of Appendix J1 to subpart B of part 430.

[70 FR 60416, Oct. 18, 2005, as amended at 76 FR 12504, Mar. 7, 2011; 79 FR 71630, Dec. 3, 2014]

TEST PROCEDURES

§ 431.154 Test procedures.

The test procedures for clothes washers in Appendix J1 to subpart B of part 430 of this chapter must be used to test

commercial clothes washers to determine compliance with the energy conservation standards at §431.156(b). The test procedures for clothes washers in Appendix J2 to subpart B of part 430 of this title must be used to determine compliance with any amended standards based on Appendix J2 efficiency metrics published after December 3, 2014.

[79 FR 71630, Dec. 3, 2014]

ENERGY CONSERVATION STANDARDS

§431.156 Energy and water conservation standards and effective dates.

(a) Each commercial clothes washer manufactured between January 1, 2007, and January 8, 2013, shall have—

(1) A modified energy factor of at least 1.26; and

(2) A water consumption factor of not more than 9.5.

(b) Each commercial clothes washer manufactured on or after January 8, 2013, and before January 1, 2018, shall have a modified energy factor no less than and a water factor no greater than:

Equipment class	Modified energy factor (MEF), *cu. ft./kWh/cycle*	Water factor (WF), *gal./cu. ft./cycle*
Top-Loading	1.60	8.5
Front-Loading	2.00	5.5

(c) Each commercial clothes washer manufactured on or after January 1, 2018 shall have a modified energy factor no less than and an integrated water factor no greater than:

Equipment class	Modified energy factor (MEF_{12}), *cu. ft./kWh/cycle*	Integrated Water factor (IWF), *gal./cu. ft./cycle*
Top-Loading	1.35	8.8
Front-Loading	2.00	4.1

[76 FR 69123, Nov. 8, 2011, as amended at 79 FR 74541, Dec. 15, 2014]

Subpart J [Reserved]

§§431.171–431.176 [Reserved]

Subpart K—Distribution Transformers

SOURCE: 70 FR 60416, Oct. 18, 2005, unless otherwise noted.

§431.191 Purpose and scope.

This subpart contains energy conservation requirements for distribution transformers, pursuant to Parts B and C of Title III of the Energy Policy and Conservation Act, as amended, 42 U.S.C. 6291–6317.

[71 FR 24995, Apr. 27, 2006]

§431.192 Definitions.

The following definitions apply for purposes of this subpart:

Autotransformer means a transformer that:

(1) Has one physical winding that consists of a series winding part and a common winding part;

(2) Has no isolation between its primary and secondary circuits; and

(3) During step-down operation, has a primary voltage that is equal to the total of the series and common winding voltages, and a secondary voltage that is equal to the common winding voltage.

Basic model means a group of models of distribution transformers manufactured by a single manufacturer, that have the same insulation type (*i.e.*, liquid-immersed or dry-type), have the same number of phases (*i.e.*, single or three), have the same standard kVA rating, and do not have any differentiating electrical, physical or functional features that affect energy consumption. Differences in voltage and differences in basic impulse insulation level (BIL) rating are examples of differentiating electrical features that affect energy consumption.

Distribution transformer means a transformer that—

(1) Has an input voltage of 34.5 kV or less;

(2) Has an output voltage of 600 V or less;

(3) Is rated for operation at a frequency of 60 Hz; and

(4) Has a capacity of 10 kVA to 2500 kVA for liquid-immersed units and 15 kVA to 2500 kVA for dry-type units; but

(5) The term ''distribution transformer'' does not include a transformer that is an—

(i) Autotransformer;

(ii) Drive (isolation) transformer;

(iii) Grounding transformer;

(iv) Machine-tool (control) transformer;

(v) Nonventilated transformer;

(vi) Rectifier transformer;

(vii) Regulating transformer;

(viii) Sealed transformer;

(ix) Special-impedance transformer;

(x) Testing transformer;

(xi) Transformer with tap range of 20 percent or more;

(xii) Uninterruptible power supply transformer; or

(xiii) Welding transformer.

Drive (isolation) transformer means a transformer that:

(1) Isolates an electric motor from the line;

(2) Accommodates the added loads of drive-created harmonics; and

(3) Is designed to withstand the additional mechanical stresses resulting from an alternating current adjustable frequency motor drive or a direct current motor drive.

Efficiency means the ratio of the useful power output to the total power input.

Excitation current or *no-load current* means the current that flows in any winding used to excite the transformer when all other windings are open-circuited.

Grounding transformer means a three-phase transformer intended primarily to provide a neutral point for system-grounding purposes, either by means of:

(1) A grounded wye primary winding and a delta secondary winding; or

(2) A transformer with its primary winding in a zig-zag winding arrangement, and with no secondary winding.

Liquid-immersed distribution transformer means a distribution transformer in which the core and coil assembly is immersed in an insulating liquid.

Load loss means, for a distribution transformer, those losses incident to a specified load carried by the transformer, including losses in the windings as well as stray losses in the conducting parts of the transformer.

Low-voltage dry-type distribution transformer means a distribution transformer that—

(1) Has an input voltage of 600 volts or less;

(2) Is air-cooled; and

(3) Does not use oil as a coolant.

Machine-tool (control) transformer means a transformer that is equipped with a fuse or other over-current protection device, and is generally used for the operation of a solenoid, contactor, relay, portable tool, or localized lighting.

Medium-voltage dry-type distribution transformer means a distribution transformer in which the core and coil assembly is immersed in a gaseous or dry-compound insulating medium, and which has a rated primary voltage between 601 V and 34.5 kV.

Mining distribution transformer means a medium-voltage dry-type distribution transformer that is built only for installation in an underground mine or surface mine, inside equipment for use in an underground mine or surface mine, on-board equipment for use in an underground mine or surface mine, or for equipment used for digging, drilling, or tunneling underground or above ground, and that has a nameplate which identifies the transformer as being for this use only.

No-load loss means those losses that are incident to the excitation of the transformer.

Nonventilated transformer means a transformer constructed so as to prevent external air circulation through the coils of the transformer while operating at zero gauge pressure.

Phase angle means the angle between two phasors, where the two phasors represent progressions of periodic waves of either:

(1) Two voltages;

(2) Two currents; or

(3) A voltage and a current of an alternating current circuit.

Phase angle correction means the adjustment (correction) of measurement data to negate the effects of phase angle error.

Phase angle error means incorrect displacement of the phase angle, introduced by the components of the test equipment.

Rectifier transformer means a transformer that operates at the fundamental frequency of an alternating-current system and that is designed to have one or more output windings connected to a rectifier.

Reference temperature means 20 °C for no-load loss, 55 °C for load loss of liquid-immersed distribution transformers at 50 percent load, and 75 °C for load loss of both low-voltage and medium-voltage dry-type distribution transformers, at 35 percent load and 50 percent load, respectively. It is the temperature at which the transformer losses must be determined, and to which such losses must be corrected if testing is done at a different point. (These temperatures are specified in the test method in appendix A to this part.)

Regulating transformer means a transformer that varies the voltage, the phase angle, or both voltage and phase angle, of an output circuit and compensates for fluctuation of load and input voltage, phase angle or both voltage and phase angle.

Sealed transformer means a transformer designed to remain hermetically sealed under specified conditions of temperature and pressure.

Special-impedance transformer means any transformer built to operate at an impedance outside of the normal impedance range for that transformer's kVA rating. The normal impedance range for each kVA rating for liquid-immersed and dry-type transformers is shown in Tables 1 and 2, respectively.

TABLE 1—NORMAL IMPEDANCE RANGES FOR LIQUID-IMMERSED TRANSFORMERS

Single-phase transformers		Three-phase transformers	
kVA	Impedance (%)	kVA	Impedance (%)
10	1.0–4.5	15	1.0–4.5
15	1.0–4.5	30	1.0–4.5
25	1.0–4.5	45	1.0–4.5
37.5	1.0–4.5	75	1.0–5.0
50	1.5–4.5	112.5	1.2–6.0
75	1.5–4.5	150	1.2–6.0
100	1.5–4.5	225	1.2–6.0
167	1.5–4.5	300	1.2–6.0
250	1.5–6.0	500	1.5–7.0
333	1.5–6.0	750	5.0–7.5
500	1.5–7.0	1000	5.0–7.5
667	5.0–7.5	1500	5.0–7.5
833	5.0–7.5	2000	5.0–7.5
		2500	5.0–7.5

TABLE 2—NORMAL IMPEDANCE RANGES FOR DRY-TYPE TRANSFORMERS

Single-phase transformers		Three-phase transformers	
kVA	Impedance (%)	kVA	Impedance (%)
15	1.5–6.0	15	1.5–6.0
25	1.5–6.0	30	1.5–6.0
37.5	1.5–6.0	45	1.5–6.0
50	1.5–6.0	75	1.5–6.0
75	2.0–7.0	112.5	1.5–6.0
100	2.0–7.0	150	1.5–6.0
167	2.5–8.0	225	3.0–7.0
250	3.5–8.0	300	3.0–7.0
333	3.5–8.0	500	4.5–8.0
500	3.5–8.0	750	5.0–8.0
667	5.0–8.0	1000	5.0–8.0
833	5.0–8.0	1500	5.0–8.0
		2000	5.0–8.0
		2500	5.0–8.0

Temperature correction means the mathematical correction(s) of measurement data, obtained when a transformer is tested at a temperature that is different from the reference temperature, to the value(s) that would have been obtained if the transformer had been tested at the reference temperature.

Test current means the current of the electrical power supplied to the transformer under test.

Test frequency means the frequency of the electrical power supplied to the transformer under test.

Test voltage means the voltage of the electrical power supplied to the transformer under test.

Testing transformer means a transformer used in a circuit to produce a specific voltage or current for the purpose of testing electrical equipment.

Total loss means the sum of the no-load loss and the load loss for a transformer.

Transformer means a device consisting of 2 or more coils of insulated wire that transfers alternating current by electromagnetic induction from 1 coil to another to change the original voltage or current value.

Transformer with tap range of 20 percent or more means a transformer with multiple voltage taps, the highest of which equals at least 20 percent more than the lowest, computed based on the sum of the deviations of the voltages of these taps from the transformer's nominal voltage.

Uninterruptible power supply transformer means a transformer that is

used within an uninterruptible power system, which in turn supplies power to loads that are sensitive to power failure, power sags, over voltage, switching transients, line noise, and other power quality factors.

Waveform correction means the adjustment(s) (mathematical correction(s)) of measurement data obtained with a test voltage that is non-sinusoidal, to a value(s) that would have been obtained with a sinusoidal voltage.

Welding transformer means a transformer designed for use in arc welding equipment or resistance welding equipment.

[70 FR 60416, Oct. 18, 2005, as amended at 71 FR 24995, Apr. 27, 2006; 71 FR 60662, Oct. 16, 2006; 72 FR 58239, Oct. 12, 2007; 78 FR 23433, Apr. 18, 2013]

TEST PROCEDURES

§ 431.193 Test procedures for measuring energy consumption of distribution transformers.

The test procedures for measuring the energy efficiency of distribution transformers for purposes of EPCA are specified in appendix A to this subpart.

[71 FR 24997, Apr. 27, 2006]

ENERGY CONSERVATION STANDARDS

§ 431.196 Energy conservation standards and their effective dates.

(a) *Low-Voltage Dry-Type Distribution Transformers.* (1) The efficiency of a low-voltage, dry-type distribution transformer manufactured on or after January 1, 2007, but before January 1, 2016, shall be no less than that required for the applicable kVA rating in the table below. Low-voltage dry-type distribution transformers with kVA ratings not appearing in the table shall have their minimum efficiency level determined by linear interpolation of the kVA and efficiency values immediately above and below that kVA rating.

Single-phase		Three-phase	
kVA	%	kVA	%
15	97.7	15	97.0
25	98.0	30	97.5
37.5	98.2	45	97.7
50	98.3	75	98.0
75	98.5	112.5	98.2
100	98.6	150	98.3
167	98.7	225	98.5
250	98.8	300	98.6
333	98.9	500	98.7
		750	98.8
		1000	98.9

Note: All efficiency values are at 35 percent of nameplate-rated load, determined according to the DOE Test Method for Measuring the Energy Consumption of Distribution Transformers under Appendix A to Subpart K of 10 CFR part 431.

(2) The efficiency of a low-voltage dry-type distribution transformer manufactured on or after January 1, 2016, shall be no less than that required for their kVA rating in the table below. Low-voltage dry-type distribution transformers with kVA ratings not appearing in the table shall have their minimum efficiency level determined by linear interpolation of the kVA and efficiency values immediately above and below that kVA rating.

Single-phase		Three-phase	
kVA	Efficiency (%)	kVA	Efficiency (%)
15	97.70	15	97.89
25	98.00	30	98.23
37.5	98.20	45	98.40
50	98.30	75	98.60
75	98.50	112.5	98.74
100	98.60	150	98.83
167	98.70	225	98.94
250	98.80	300	99.02
333	98.90	500	99.14
		750	99.23
		1000	99.28

Note: All efficiency values are at 35 percent of nameplate-rated load, determined according to the DOE Test Method for Measuring the Energy Consumption of Distribution Transformers under Appendix A to Subpart K of 10 CFR part 431.

(b) *Liquid-Immersed Distribution Transformers.* (1) The efficiency of a liquid-immersed distribution transformer manufactured on or after January 1, 2010, but before January 1, 2016, shall be no less than that required for their kVA rating in the table below. Liquid-immersed distribution transformers with kVA ratings not appearing in the table shall have their minimum efficiency level determined by linear interpolation of the kVA and efficiency values immediately above and below that kVA rating.

Single-phase		Three-phase	
kVA	Efficiency (%)	kVA	Efficiency (%)
10	98.62	15	98.36
15	98.76	30	98.62

Single-phase		Three-phase	
kVA	Efficiency (%)	kVA	Efficiency (%)
25	98.91	45	98.76
37.5	99.01	75	98.91
50	99.08	112.5	99.01
75	99.17	150	99.08
100	99.23	225	99.17
167	99.25	300	99.23
250	99.32	500	99.25
333	99.36	750	99.32
500	99.42	1000	99.36
667	99.46	1500	99.42
833	99.49	2000	99.46
		2500	99.49

Note: All efficiency values are at 50 percent of nameplate-rated load, determined according to the DOE Test—Procedure, Appendix A to Subpart K of 10 CFR part 431.

(2) The efficiency of a liquid-immersed distribution transformer manufactured on or after January 1, 2016, shall be no less than that required for their kVA rating in the table below. Liquid-immersed distribution transformers with kVA ratings not appearing in the table shall have their minimum efficiency level determined by linear interpolation of the kVA and efficiency values immediately above and below that kVA rating.

Single-phase		Three-phase	
kVA	Efficiency (%)	kVA	Efficiency (%)
10	98.70	15	98.65
15	98.82	30	98.83
25	98.95	45	98.92
37.5	99.05	75	99.03
50	99.11	112.5	99.11
75	99.19	150	99.16
100	99.25	225	99.23
167	99.33	300	99.27
250	99.39	500	99.35
333	99.43	750	99.40
500	99.49	1000	99.43
667	99.52	1500	99.48
833	99.55	2000	99.51
		2500	99.53

Note: All efficiency values are at 50 percent of nameplate-rated load, determined according to the DOE Test Method for Measuring the Energy Consumption of Distribution Transformers under Appendix A to Subpart K of 10 CFR part 431.

(c) *Medium-Voltage Dry-Type Distribution Transformers.* (1) The efficiency of a medium-voltage dry-type distribution transformer manufactured on or after January 1, 2010, but before January 1, 2016, shall be no less than that required for their kVA and BIL rating in the table below. Medium-voltage dry-type distribution transformers with kVA ratings not appearing in the table shall have their minimum efficiency level determined by linear interpolation of the kVA and efficiency values immediately above and below that kVA rating.

Single-phase				Three-phase			
kVA	BIL*			kVA	BIL		
	20–45 kV	46–95 kV	≥96 kV		20–45 kV	46–95 kV	≥96 kV
	Efficiency (%)	Efficiency (%)	Efficiency (%)		Efficiency (%)	Efficiency (%)	Efficiency (%)
15	98.10	97.86		15	97.50	97.18	
25	98.33	98.12		30	97.90	97.63	
37.5	98.49	98.30		45	98.10	97.86	
50	98.60	98.42		75	98.33	98.12	
75	98.73	98.57	98.53	112.5	98.49	98.30	
100	98.82	98.67	98.63	150	98.60	98.42	
167	98.96	98.83	98.80	225	98.73	98.57	98.53
250	99.07	98.95	98.91	300	98.82	98.67	98.63
333	99.14	99.03	98.99	500	98.96	98.83	98.80
500	99.22	99.12	99.09	750	99.07	98.95	98.91
667	99.27	99.18	99.15	1000	99.14	99.03	98.99
833	99.31	99.23	99.20	1500	99.22	99.12	99.09
				2000	99.27	99.18	99.15
				2500	99.31	99.23	99.20

*BIL means basic impulse insulation level.

Note: All efficiency values are at 50 percent of nameplate rated load, determined according to the DOE Test Method for Measuring the Energy Consumption of Distribution Transformers under Appendix A to Subpart K of 10 CFR part 431.

(2) The efficiency of a medium- voltage dry-type distribution transformer manufactured on or after January 1, 2016, shall be no less than that required for their kVA and BIL rating in the table below. Medium-voltage dry-type distribution transformers with kVA ratings not appearing in the table shall

have their minimum efficiency level determined by linear interpolation of the kVA and efficiency values immediately above and below that kVA rating.

Single-phase				Three-phase			
kVA	BIL*			kVA	BIL		
	20–45 kV	46–95 kV	≥96 kV		20–45 kV	46–95 kV	≥96 kV
	Efficiency (%)	Efficiency (%)	Efficiency (%)		Efficiency (%)	Efficiency (%)	Efficiency (%)
15	98.10	97.86	.....	15	97.50	97.18	
25	98.33	98.12	.....	30	97.90	97.63	
37.5	98.49	98.30	.....	45	98.10	97.86	
50	98.60	98.42	.....	75	98.33	98.13	
75	98.73	98.57	98.53	112.5	98.52	98.36	
100	98.82	98.67	98.63	150	98.65	98.51	
167	98.96	98.83	98.80	225	98.82	98.69	98.57
250	99.07	98.95	98.91	300	98.93	98.81	98.69
333	99.14	99.03	98.99	500	99.09	98.99	98.89
500	99.22	99.12	99.09	750	99.21	99.12	99.02
667	99.27	99.18	99.15	1000	99.28	99.20	99.11
833	99.31	99.23	99.20	1500	99.37	99.30	99.21
				2000	99.43	99.36	99.28
				2500	99.47	99.41	99.33

*BIL means basic impulse insulation level.

Note: All efficiency values are at 50 percent of nameplate rated load, determined according to the DOE Test Method for Measuring the Energy Consumption of Distribution Transformers under Appendix A to Subpart K of 10 CFR part 431.

(d) *Mining Distribution Transformers.* [Reserved]

[78 FR 23433, Apr. 18, 2013]

COMPLIANCE AND ENFORCEMENT

SOURCE: 71 FR 24997, Apr. 27, 2006, unless otherwise noted.

APPENDIX A TO SUBPART K OF PART 431—UNIFORM TEST METHOD FOR MEASURING THE ENERGY CONSUMPTION OF DISTRIBUTION TRANSFORMERS

1.0 DEFINITIONS.

The definitions contained in §§431.2 and 431.192 are applicable to this appendix A.

2.0 ACCURACY REQUIREMENTS.

(a) Equipment and methods for loss measurement shall be sufficiently accurate that measurement error will be limited to the values shown in Table 2.1.

TABLE 2.1—TEST SYSTEM ACCURACY REQUIREMENTS FOR EACH MEASURED QUANTITY

Measured quantity	Test system accuracy
Power Losses	±3.0%
Voltage	±0.5%
Current	±0.5%
Resistance	±0.5%
Temperature	±1.0 °C

(b) Only instrument transformers meeting the 0.3 metering accuracy class, or better, may be used under this test method.

3.0 RESISTANCE MEASUREMENTS

3.1 *General Considerations*

(a) Measure or establish the winding temperature at the time of the winding resistance measurement.

(b) Measure the direct current resistance (R_{dc}) of transformer windings by one of the methods outlined in section 3.3. The methods of section 3.5 must be used to correct load losses to the applicable reference temperature from the temperature at which they are measured. Observe precautions while taking measurements, such as those in section 3.4, in order to maintain measurement uncertainty limits specified in Table 2.1.

3.2 *Temperature Determination of Windings and Pre-conditions for Resistance Measurement.*

Make temperature measurements in protected areas where the air temperature is stable and there are no drafts. Determine the winding temperature (T_{dc}) for liquid-immersed and dry-type distribution transformers by the methods described in sections 3.2.1 and 3.2.2, respectively.

3.2.1 *Liquid-Immersed Distribution Transformers.*

3.2.1.1 *Methods*

Record the winding temperature (T_{dc}) of liquid-immersed transformers as the average of either of the following:

(a) The measurements from two temperature sensing devices (for example,

thermocouples) applied to the outside of the transformer tank and thermally insulated from the surrounding environment, with one located at the level of the oil and the other located near the tank bottom or at the lower radiator header if applicable; or

(b) The measurements from two temperature sensing devices immersed in the transformer liquid, with one located directly above the winding and other located directly below the winding.

3.2.1.2 *Conditions*

Make this determination under either of the following conditions:

(a) The windings have been under insulating liquid with no excitation and no current in the windings for four hours before the dc resistance is measured; or

(b) The temperature of the insulating liquid has stabilized, and the difference between the top and bottom temperature does not exceed 5 °C.

3.2.2 *Dry-Type Distribution Transformers.*

Record the winding temperature (T_{dc}) of dry-type transformers as either of the following:

(a) For ventilated dry-type units, use the average of readings of four or more thermometers, thermocouples, or other suitable temperature sensors inserted within the coils. Place the sensing points of the measuring devices as close as possible to the winding conductors. For sealed units, such as epoxy-coated or epoxy-encapsulated units, use the average of four or more temperature sensors located on the enclosure and/or cover, as close to different parts of the winding assemblies as possible; or

(b) For both ventilated and sealed units, use the ambient temperature of the test area, under the following conditions:

(1) All internal temperatures measured by the internal temperature sensors must not differ from the test area ambient temperature by more than 2 °C.

(2) Enclosure surface temperatures for sealed units must not differ from the test area ambient temperature by more than 2 °C.

(3) Test area ambient temperature should not have changed by more than 3 °C for 3 hours before the test.

(4) Neither voltage nor current has been applied to the unit under test for 24 hours. In addition, increase this initial 24 hour period by any added amount of time necessary for the temperature of the transformer windings to stabilize at the level of the ambient temperature. However, this additional amount of time need not exceed 24 hours.

3.3 *Resistance Measurement Methods.*

Make resistance measurements using either the resistance bridge method, the voltmeter-ammeter method or a resistance meter. In each instance when this Uniform Test Method is used to test more than one unit of a basic model to determine the efficiency of that basic model, the resistance of the units being tested may be determined from making resistance measurements on only one of the units.

3.3.1 *Resistance Bridge Methods.*

If the resistance bridge method is selected, use either the Wheatstone or Kelvin bridge circuit (or the equivalent of either).

3.3.1.1 *Wheatstone Bridge*

(a) This bridge is best suited for measuring resistances larger than ten ohms. A schematic diagram of a Wheatstone bridge with a representative transformer under test is shown in Figure 3.1.

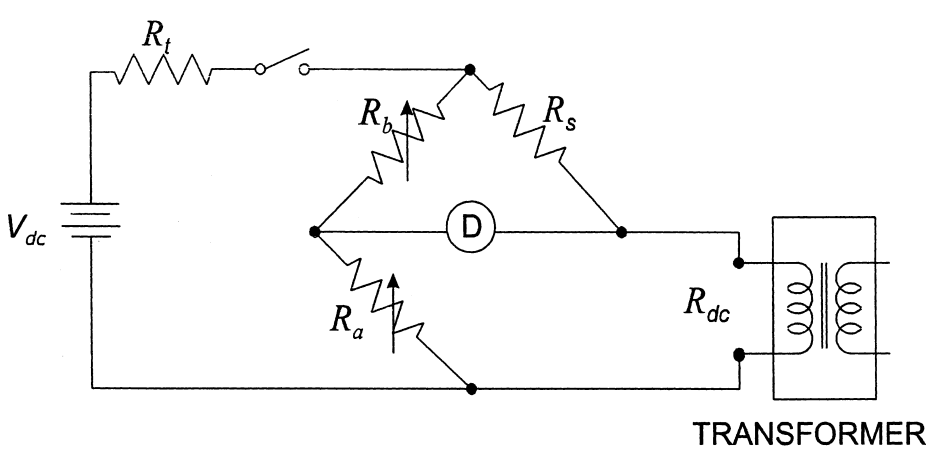

Figure 3.1 Wheatstone Bridge

Where:

R_{dc} is the resistance of the transformer winding being measured,

R_s is a standard resistor having the resistance R_s,

R_a, R_b are two precision resistors with resistance values R_a and R_b , respectively; at least one resistor must have a provision for resistance adjustment,

R_t is a resistor for reducing the time constant of the circuit,

D is a null detector, which may be either a micro ammeter or microvoltmeter or equivalent instrument for observing that no signal is present when the bridge is balanced, and

V_{dc} is a source of dc voltage for supplying the power to the Wheatstone Bridge.

(b) In the measurement process, turn on the source (V_{dc}), and adjust the resistance ratio (R_a/R_b) to produce zero signal at the detector (D). Determine the winding resistance by using equation 3–1 as follows:

$$R_{dc} = R_s\left(R_a/R_b\right) \qquad (3\text{-}1)$$

3.3.1.2 *Kelvin Bridge*

(a) This bridge separates the resistance of the connecting conductors to the transformer winding being measured from the resistance of the winding, and therefore is best suited for measuring resistances of ten ohms and smaller. A schematic diagram of a Kelvin bridge with a representative transformer under test is shown in Figure 3.2.

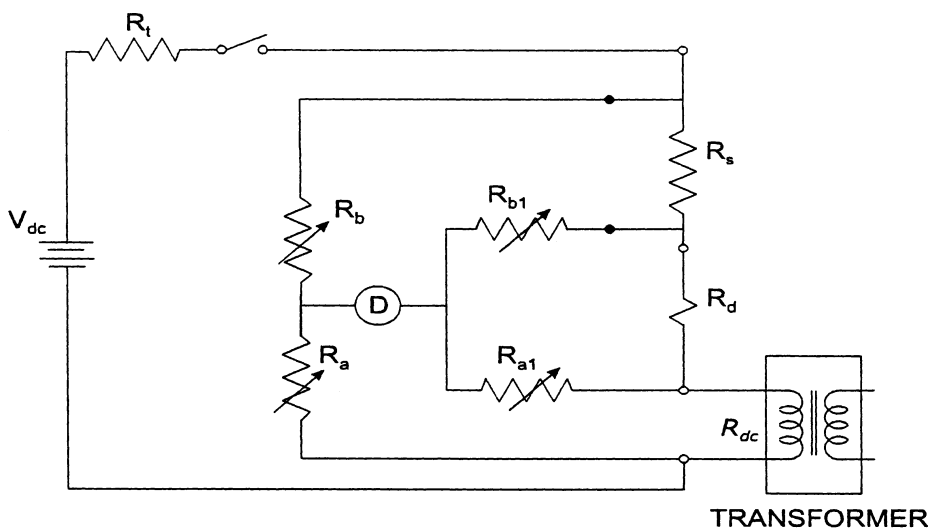

Figure 3.2 Kelvin Bridge

(b) The Kelvin Bridge has seven of the same type of components as in the Wheatstone Bridge. It has two more resistors than the Wheatstone bridge, R_{a1} and R_{b1}. At least one of these resistors must have adjustable resistance. In the measurement process, the source is turned on, two resistance ratios (R_a/R_b) and (R_{a1}/R_{b1}) are adjusted to be equal, and then the two ratios are adjusted together to balance the bridge producing zero signal at the detector. Determine the winding resistance by using equation 3–2 as follows:

$$R_{dc} = R_s\left(R_a/R_b\right) \qquad (3\text{-}2),$$

as with the Wheatstone bridge, with an additional condition that:

$$\left(R_a/R_b\right) = \left(R_{a1}/R_{b1}\right) \qquad (3\text{-}3)$$

(c) The Kelvin bridge provides two sets of leads, current-carrying and voltage-sensing, to the transformer terminals and the standard resistor, thus eliminating voltage drops

from the measurement in the current-carrying leads as represented by R_d.

3.3.2 *Voltmeter-Ammeter Method.*

(a) Employ the voltmeter-ammeter method only if the rated current of the winding is greater than one ampere and the test current is limited to 15 percent of the winding current. Connect the transformer winding under test to the circuit shown in Figure 3.3.

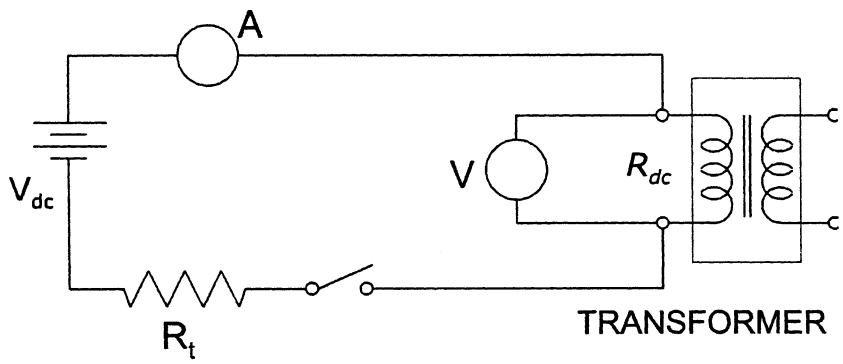

Figure 3.3 Voltmeter-Ammeter Method

Where:

A is an ammeter or a voltmeter-shunt combination for measuring the current (I_{mdc}) in the transformer winding,

V is a voltmeter with sensitivity in the millivolt range for measuring the voltage (V_{mdc}) applied to the transformer winding,

R_{dc} is the resistance of the transformer winding being measured,

R_t is a resistor for reducing the time constant of the circuit, and

V_{dc} is a source of dc voltage for supplying power to the measuring circuit.

(b) To perform the measurement, turn on the source to produce current no larger than 15 percent of the rated current for the winding. Wait until the current and voltage readings have stabilized and then take simultaneous readings of voltage and current. Determine the winding resistance R_{dc} by using equation 3–4 as follows:

$$R_{dc} = \left(V_{mdc}/I_{mdc}\right) \qquad (3\text{-}4)$$

Where:

V_{mdc} is the voltage measured by the voltmeter V, and

I_{mdc} is the current measured by the ammeter A.

(c) As shown in Figure 3.3, separate current and voltage leads must be brought to the transformer terminals. (This eliminates the errors due to lead and contact resistance.)

3.3.3 *Resistance Meters.*

Resistance meters may be based on voltmeter-ammeter, or resistance bridge, or some other operating principle. Any meter used to measure a transformer's winding resistance must have specifications for resistance range, current range, and ability to measure highly inductive resistors that cover the characteristics of the transformer being tested. Also the meter's specifications for accuracy must meet the applicable criteria of Table 2.1 in section 2.0.

3.4 *Precautions in Measuring Winding Resistance.*

3.4.1 *Required actions.*

The following guidelines must be observed when making resistance measurements:

(a) Use separate current and voltage leads when measuring small (<10 ohms) resistance.

(b) Use null detectors in bridge circuits, and measuring instruments in voltmeter-ammeter circuits, that have sensitivity and resolution sufficient to enable observation of at least 0.1 percent change in the measured resistance.

(c) Maintain the dc test current at or below 15 percent of the rated winding current.

(d) Inclusion of a stabilizing resistor R_t (see section 3.4.2) will require higher source voltage.

(e) Disconnect the null detector (if a bridge circuit is used) and voltmeter from the circuit before the current is switched off, and switch off current by a suitable insulated switch.

3.4.2 *Guideline for Time Constant.*

(a) The following guideline is suggested for the tester as a means to facilitate the measurement of resistance in accordance with the accuracy requirements of section 2.0:

(b) The accurate reading of resistance R_{dc} may be facilitated by shortening the time constant. This is done by introducing a resistor R_t in series with the winding under test in both the bridge and voltmeter-ammeter circuits as shown in Figures 3.1 to 3.3. The relationship for the time constant is:

$$T_c = \left(L_{tc}/R_{tc}\right) \qquad (3\text{-}5)$$

Where:

T_c is the time constant in seconds,

L_{tc} is the total magnetizing and leakage inductance of the winding under test, in henries, and

R_{tc} is the total resistance in ohms, consisting of R_t in series with the winding resistance R_{dc} and the resistance R_s of the standard resistor in the bridge circuit.

(c) Because R_{tc} is in the denominator of the expression for the time constant, increasing the resistance R_{tc} will decrease the time constant. If the time constant in a given test circuit is too long for the resistance readings to be stable, then a higher resistance can be substituted for the existing R_{tc}, and successive replacements can be made until adequate stability is reached.

3.5 *Conversion of Resistance Measurements.*

(a) Resistance measurements must be corrected, from the temperature at which the winding resistance measurements were made, to the reference temperature. As specified in these test procedures, the reference temperature for liquid-immersed transformers loaded at 50 percent of the rated load is 55 °C. For medium-voltage, dry-type transformers loaded at 50 percent of the rated load, and for low-voltage, dry-type transformers loaded at 35 percent of the rated load, the reference temperature is 75 °C.

(b) Correct the measured resistance to the resistance at the reference temperature using equation 3–6 as follows:

$$R_{ts} = R_{dc}\left[\left(T_s + T_k\right)/\left(T_{dc} + T_k\right)\right] \qquad (3\text{-}6)$$

Where:

R_{ts} is the resistance at the reference temperature, T_s,

R_{dc} is the measured resistance at temperature, T_{dc},

T_s is the reference temperature in °C,

T_{dc} is the temperature at which resistance was measured in °C, and

T_k is 234.5 °C for copper or 225 °C for aluminum.

4.0 Loss Measurement

4.1 *General Considerations.*

The efficiency of a transformer is computed from the total transformer losses, which are determined from the measured value of the no-load loss and load loss power components. Each of these two power loss components is measured separately using test sets that are identical, except that shorting straps are added for the load-loss test. The measured quantities will need correction for instrumentation losses and may need corrections for known phase angle errors in measuring equipment and for the waveform distortion in the test voltage. Any power loss not measured at the applicable reference temperature must be adjusted to that reference temperature. The measured load loss must also be adjusted to a specified output loading level if not measured at the specified output loading level. Test distribution transformers designed for harmonic currents using a sinusoidal waveform (k = 1).

4.2 *Measurement of Power Losses.*

4.2.1 *No-Load Loss.*

Measure the no-load loss and apply corrections as described in section 4.4, using the appropriate test set as described in section 4.3.

4.2.2 *Load Loss.*

Measure the load loss and apply corrections as described in section 4.5, using the appropriate test set as described in section 4.3.

4.3 *Test Sets.*

(a) The same test set may be used for both the no-load loss and load loss measurements provided the range of the test set encompasses the test requirements of both tests. Calibrate the test set to national standards to meet the tolerances in Table 2.1 in section 2.0. In addition, the wattmeter, current measuring system and voltage measuring system must be calibrated separately if the overall test set calibration is outside the tolerance as specified in section 2.0 or the individual phase angle error exceeds the values specified in section 4.5.3.

(b) A test set based on the wattmeter-voltmeter-ammeter principle may be used to measure the power loss and the applied voltage and current of a transformer where the transformer's test current and voltage are within the measurement capability of the measuring instruments. Current and voltage transformers, known collectively as instrument transformers, or other scaling devices such as resistive or capacitive dividers for voltage, may be used in the above circumstance, and must be used together with instruments to measure current, voltage, or power where the current or voltage of the transformer under test exceeds the measurement capability of such instruments. Thus, a test set may include a combination of measuring instruments and instrument transformers (or other scaling devices), so long as the current or voltage of the transformer

under test does not exceed the measurement capability of any of the instruments.

4.3.1 *Single-Phase Test Sets.*

Use these for testing single-phase distribution transformers.

4.3.1.1 *Without Instrument Transformers.*

(a) A single-phase test set without an instrument transformer is shown in Figure 4.1.

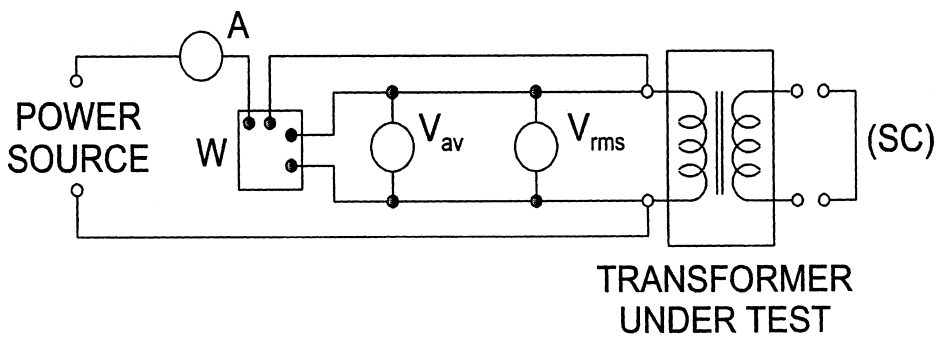

Figure 4.1 Single-Phase Test Set Without Instrument Transformers

Where:

W is a wattmeter used to measure P_{nm} and P_{lm}, the no-load and load loss power, respectively,

V_{rms} is a true root-mean-square (rms) voltmeter used to measure $V_{r(nm)}$ and V_{lm}, the rms test voltages in no-load and load loss measurements, respectively,

V_{av} is an average sensing voltmeter, calibrated to indicate rms voltage for sinusoidal waveforms and used to measure $V_{a(nm)}$, the average voltage in no-load loss measurements,

A is an rms ammeter used to measure test current, especially I_{lm}, the load loss current, and

(SC) is a conductor for providing a short-circuit across the output windings for the load loss measurements.

(b) Either the primary or the secondary winding can be connected to the test set. However, more compatible voltage and current levels for the measuring instruments are available if for no-load loss measurements the secondary (low voltage) winding is connected to the test set, and for load loss measurements the primary winding is connected to the test set. Use the average-sensing voltmeter, V_{av}, only in no-load loss measurements.

4.3.1.2 *With Instrument Transformers.*

A single-phase test set with instrument transformers is shown in Figure 4.2. This circuit has the same four measuring instruments as that in Figure 4.1. The current and voltage transformers, designated as (CT) and (VT), respectively, are added.

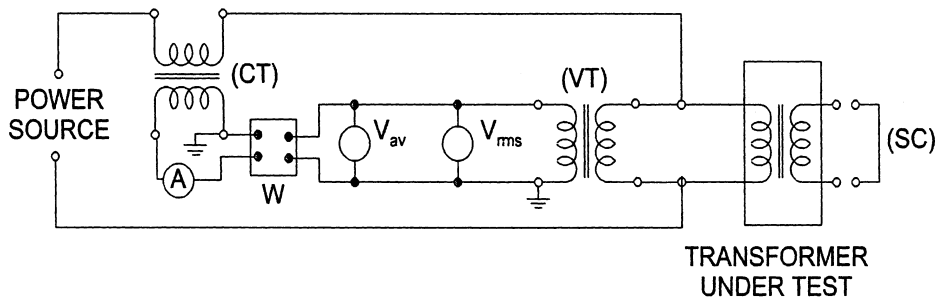

Figure 4.2 Single-Phase Test Set With Instrument Transformers

4.3.2 *Three-Phase Test Sets.*

Use these for testing three-phase distribution transformers. Use in a four-wire, three-wattmeter test circuit.

4.3.2.1 *Without Instrument Transformers.*

(a) A three-phase test set without instrument transformers is shown in Figure 4.3. This test set is essentially the same circuit shown in Figure 4.1 repeated three times, and the instruments are individual devices as shown. As an alternative, the entire instrumentation system of a three-phase test set without transformers may consist of a multi-function analyzer.

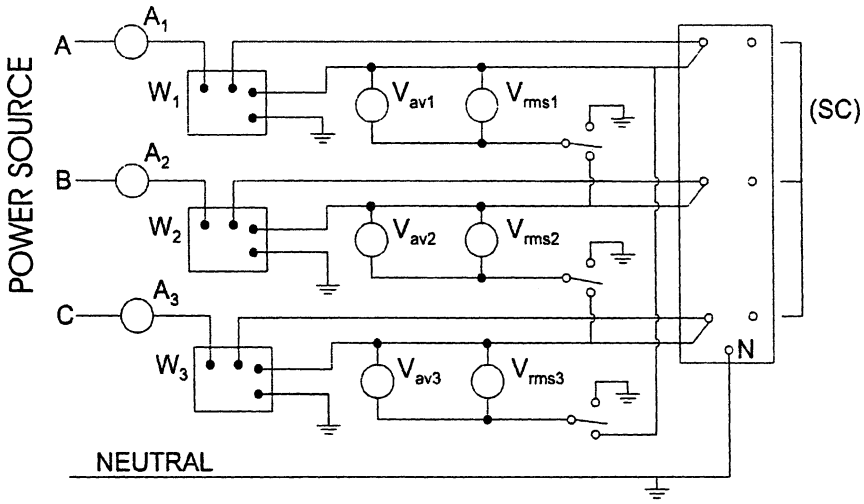

Figure 4.3 Three-Phase Test Set Without Instrument Transformers

(b) Either group of windings, the primary or the secondary, can be connected in wye or delta configuration. If both groups of windings are connected in the wye configuration for the no-load test, the neutral of the winding connected to the test set must be connected to the neutral of the source to provide a return path for the neutral current.

(c) In the no-load loss measurement, the voltage on the winding must be measured. Therefore a provision must be made to switch the voltmeters for line-to-neutral measurements for wye-connected windings

and for line-to-line measurements for delta-connected windings.

4.3.2.2 *With Instrument Transformers.*

A three-phase test set with instrument transformers is shown in Figure 4.4. This test set is essentially the same circuit shown in Figure 4.2 repeated three times. Provision must be made to switch the voltmeters for line-to-neutral and line-to-line measurements as in section 4.3.2.1. The voltage sensors (''coils'') of the wattmeters must always be connected in the line-to-neutral configuration.

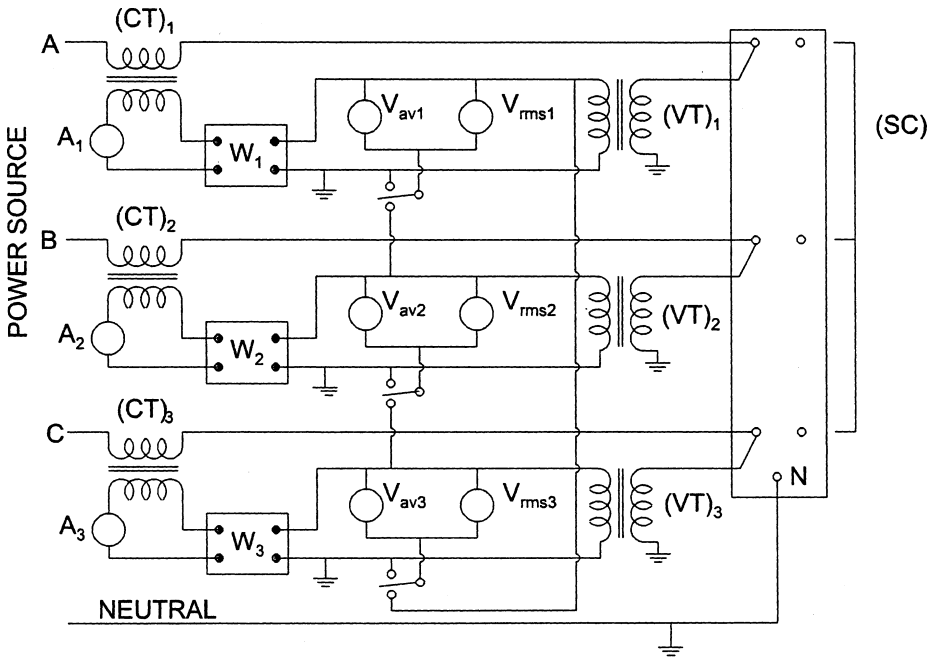

Figure 4.4 Three-Phase Test Set with Instrument Transformers

4.3.2.3 *Test Set Neutrals.*

If the power source in the test circuit is wye-connected, ground the neutral. If the power source in the test circuit is delta-connected, use a grounding transformer to obtain neutral and ground for the test.

4.4 *No-Load Losses: Measurement and Calculations.*

4.4.1 *General Considerations.*

Measurement corrections are permitted but not required for instrumentation losses and for losses from auxiliary devices. Measurement corrections are required:

(a) When the waveform of the applied voltage is non-sinusoidal; and

(b) When the core temperature or liquid temperature is outside the 20 °C ±10 °C range.

4.4.2 *No-Load Loss Test.*

(a) The purpose of the no-load loss test is to measure no-load losses at a specified excitation voltage and a specified frequency. The no-load loss determination must be based on a sine-wave voltage corrected to the reference temperature. Connect either of the transformer windings, primary or secondary, to the appropriate test set of Figures 4.1 to 4.4, giving consideration to section 4.4.2(a)(2). Leave the unconnected winding(s) open circuited. Apply the rated voltage at rated frequency, as measured by the average-sensing voltmeter, to the transformer. Take the readings of the wattmeter(s) and the average-sensing and true rms voltmeters. Observe the following precautions:

(1) Voltmeter connections. When correcting to a sine-wave basis using the average-voltmeter method, the voltmeter connections must be such that the waveform applied to the voltmeters is the same as the waveform across the energized windings.

(2) Energized windings. Energize either the high voltage or the low voltage winding of the transformer under test.

(3) Voltage and frequency. The no-load loss test must be conducted with rated voltage impressed across the transformer terminals using a voltage source at a frequency equal to the rated frequency of the transformer under test.

(b) Adjust the voltage to the specified value as indicated by the average-sensing voltmeter. Record the values of rms voltage, rms current, electrical power, and average voltage as close to simultaneously as possible. For a three-phase transformer, take all of the readings on one phase before proceeding to the next, and record the average of the three rms voltmeter readings as the rms voltage value.

NOTE: When the tester uses a power supply that is not synchronized with an electric utility grid, such as a dc/ac motor-generator set, check the frequency and maintain it within ±0.5 percent of the rated frequency of the transformer under test. A power source that is directly connected to, or synchronized with, an electric utility grid need not be monitored for frequency.

4.4.3 *Corrections.*

4.4.3.1 *Correction for Instrumentation Losses.*

Measured losses attributable to the voltmeters and wattmeter voltage circuit, and to voltage transformers if they are used, may be deducted from the total no-load losses measured during testing.

4.4.3.2 *Correction for Non-Sinusoidal Applied Voltage.*

(a) The measured value of no-load loss must be corrected to a sinusoidal voltage, except when waveform distortion in the test voltage causes the magnitude of the correction to be less than 1 percent. In such a case, no correction is required.

(b) To make a correction where the distortion requires a correction of 5 percent or less, use equation 4–1. If the distortion requires a correction to be greater than 5 percent, improve the test voltage and re-test. Repeat until the distortion requires a correction of 5 percent or less.

(c) Determine the no-load losses of the transformer corrected for sine-wave basis from the measured value by using equation 4–1 as follows:

$$P_{ncl} = \frac{P_{nm}}{P_1 + kP_2} \qquad (4\text{-}1)$$

Where:

P_{ncl} is the no-load loss corrected to a sine-wave basis at the temperature (T_{nm}) at which no-load loss is measured,

P_{nm} is the measured no-load loss at temperature T_{nm},

P_1 is the per unit hysteresis loss,

P_2 is the per unit eddy-current loss,

$P_1 + P_2 = 1$,

$$k = \left(\frac{V_{r(nm)}}{V_{a(nm)}}\right)^2,$$

$V_{r(nm)}$ is the test voltage measured by rms voltmeter, and

$V_{a(nm)}$ is the test voltage measured by average-voltage voltmeter.

(d) The two loss components (P_1 and P_2) are assumed equal in value, each assigned a value of 0.5 per unit, unless the actual measurement-based values of hysteresis and eddy-current losses are available (in per unit form), in which case the actual measurements apply.

4.4.3.3 *Correction of No-Load Loss to Reference Temperature.*

After correcting the measured no-load loss for waveform distortion, correct the loss to the reference temperature of 20 °C. If the no-load loss measurements were made between 10 °C and 30 °C, this correction is not required. If the correction to reference temperature is applied, then the core temperature of the transformer during no-load loss measurement (T_{nm}) must be determined within ±10 °C of the true average core temperature. Correct the no-load loss to the reference temperature by using equation 4–2 as follows:

$$P_{nc} = P_{ncl}\left[1 + 0.00065\left(T_{nm} - T_{nr}\right)\right] \qquad (4\text{-}2)$$

Where:

P_{nc} is the no-load losses corrected for waveform distortion and then to the reference temperature of 20 °C,

P_{nc1} is the no-load losses, corrected for waveform distortion, at temperature T_{nm},

T_{nm} is the core temperature during the measurement of no-load losses, and

T_{nr} is the reference temperature, 20 °C.

4.5 *Load Losses: Measurement and Calculations.*

4.5.1 *General Considerations.*

(a) The load losses of a transformer are those losses incident to a specified load carried by the transformer. Load losses consist of ohmic loss in the windings due to the load current and stray losses due to the eddy currents induced by the leakage flux in the windings, core clamps, magnetic shields, tank walls, and other conducting parts. The ohmic loss of a transformer varies directly with temperature, whereas the stray losses vary inversely with temperature.

(b) For a transformer with a tap changer, conduct the test at the rated current and rated-voltage tap position. For a transformer that has a configuration of windings which allows for more than one nominal rated voltage, determine its load losses either in the winding configuration in which the highest

losses occur or in each winding configuration in which the transformer can operate.

4.5.2 *Tests for Measuring Load Losses.*

(a) Connect the transformer with either the high-voltage or low-voltage windings to the appropriate test set. Then short-circuit the winding that was not connected to the test set. Apply a voltage at the rated frequency (of the transformer under test) to the connected windings to produce the rated current in the transformer. Take the readings of the wattmeter(s), the ammeters(s), and rms voltmeter(s).

(b) Regardless of the test set selected, the following preparatory requirements must be satisfied for accurate test results:

(1) Determine the temperature of the windings using the applicable method in section 3.2.1 or section 3.2.2.

(2) The conductors used to short-circuit the windings must have a cross-sectional area equal to, or greater than, the corresponding transformer leads, or, if the tester uses a different method to short-circuit the windings, the losses in the short-circuiting conductor assembly must be less than 10 percent of the transformer's load losses.

(3) When the tester uses a power supply that is not synchronized with an electric utility grid, such as a dc/ac motor-generator set, follow the provisions of the ''Note'' in section 4.4.2.

4.5.3 *Corrections.*

4.5.3.1 *Correction for Losses from Instrumentation and Auxiliary Devices.*

4.5.3.1.1 *Instrumentation Losses.*

Measured losses attributable to the voltmeters, wattmeter voltage circuit and short-circuiting conductor (SC), and to the voltage transformers if they are used, may be deducted from the total load losses measured during testing.

4.5.3.1.2 *Losses from Auxiliary Devices.*

Measured losses attributable to auxiliary devices (e.g., circuit breakers, fuses, switches) installed in the transformer, if any, that are not part of the winding and core assembly, may be excluded from load losses measured during testing. To exclude these losses, either (1) measure transformer losses without the auxiliary devices by removing or bypassing them, or (2) measure transformer losses with the auxiliary devices connected, determine the losses associated with the auxiliary devices, and deduct these losses from the load losses measured during testing.

4.5.3.2 *Correction for Phase Angle Errors.*

(a) Corrections for phase angle errors are not required if the instrumentation is calibrated over the entire range of power factors and phase angle errors. Otherwise, determine whether to correct for phase angle errors from the magnitude of the normalized per unit correction, β_n, obtained by using equation 4–3 as follows:

$$\beta_n = \frac{V_{lm} I_{lm} \left(\beta_w - \beta_v + \beta_c\right) \sin\ \phi}{p_{lm}} \qquad (4\text{-}3)$$

(b) The correction must be applied if β_n is outside the limits of ±0.01. If β_n is within the limits of ±0.01, the correction is permitted but not required.

(c) If the correction for phase angle errors is to be applied, first examine the total system phase angle ($\beta_w - \beta_v + \beta_c$). Where the total system phase angle is equal to or less than ±12 milliradians (±41 minutes), use either equation 4–4 or 4–5 to correct the measured load loss power for phase angle errors, and where the total system phase angle exceeds ±12 milliradians (±41 minutes) use equation 4–5, as follows:

$$P_{lcl} = P_{lm} - V_{lm} I_{lm} \left(\beta_w - \beta_v + \beta_c\right) \sin\ \phi \qquad (4\text{-}4)$$

$$P_{lcl} = V_{lm} I_{lm} \cos\left(\phi + \beta_w - \beta_v + \beta_c\right) \qquad (4\text{-}5)$$

(d) The symbols in this section (4.5.3.2) have the following meanings:

P_{lc1} is the corrected wattmeter reading for phase angle errors,

P_{lm} is the actual wattmeter reading,

V_{lm} is the measured voltage at the transformer winding,

I_{lm} is the measured rms current in the transformer winding,

$$\phi = \cos^{-1} \frac{P_{lm}}{V_{lm} I_{lm}}$$

is the measured phase angle between V_{lm} and I_{lm},

β_w is the phase angle error (in radians) of the wattmeter; the error is positive if the phase angle between the voltage and current phasors as sensed by the wattmeter is smaller than the true phase angle, thus effectively increasing the measured power,

β_v is the phase angle error (in radians) of the voltage transformer; the error is positive

if the secondary voltage leads the primary voltage, and

β_c is the phase angle error (in radians) of the current transformer; the error is positive if the secondary current leads the primary current.

(e) The instrumentation phase angle errors used in the correction equations must be specific for the test conditions involved.

4.5.3.3 *Temperature Correction of Load Loss.*

(a) When the measurement of load loss is made at a temperature T_{lm} that is different from the reference temperature, use the procedure summarized in the equations 4–6 to 4–10 to correct the measured load loss to the reference temperature. The symbols used in these equations are defined at the end of this section.

(b) Calculate the ohmic loss (P_e) by using equation 4–6 as follows:

$$\begin{aligned} P_e &= P_{e(p)} + P_{e(s)} \\ &= I_{lm(p)}^2 R_{dc(p)} \frac{T_{k(p)} + T_{lm}}{T_{k(p)} + T_{dc}} + I_{lm(s)}^2 R_{dc(s)} \frac{T_{k(s)} + T_{lm}}{T_{k(s)} + T_{dc}} \\ &= I_{lm(p)}^2 \left[R_{dc(p)} \frac{T_{k(p)} + T_{lm}}{T_{k(p)} + T_{dc}} + \left[\frac{N_1}{N_2} \right]^2 R_{dc(s)} \frac{T_{k(s)} + T_{lm}}{T_{k(s)} + T_{dc}} \right] \end{aligned} \qquad (4\text{-}6)$$

(c) Obtain the stray loss by subtracting the calculated ohmic loss from the measured load loss, by using equation 4–7 as follows:

$$P_s = P_{lc1} - P_e \qquad (4\text{-}7)$$

(d) Correct the ohmic and stray losses to the reference temperature for the load loss by using equations 4–8 and 4–9, respectively, as follows:

$$\begin{aligned} P_{er} &= P_{e(p)} \frac{T_{k(p)} + T_{lr}}{T_{k(p)} + T_{lm}} + P_{e(s)} \frac{T_{k(s)} + T_{lr}}{T_{k(s)} + T_{lm}} \\ &= I_{lm(p)}^2 \left[R_{dc(p)} \frac{T_{k(p)} + T_{lr}}{T_{k(p)} + T_{dc}} + \left[\frac{N_1}{N_2} \right]^2 R_{dc(s)} \frac{T_{k(s)} + T_{lr}}{T_{k(s)} + T_{dc}} \right] \end{aligned} \qquad (4\text{-}8)$$

$$P_{sr} = \left(P_{lc1} - P_e \right) \frac{T_k + T_{lm}}{T_k + T_{lr}} \qquad (4\text{-}9)$$

(e) Add the ohmic and stray losses, corrected to the reference temperature, to give the load loss, P_{lc2}, at the reference temperature, by using equation 4–10 as follows:

$$P_{lc2} = P_{er} + P_{sr}$$

$$= I_{lm(p)}^2 \left[R_{dc(p)} \frac{T_{k(p)} + T_{lr}}{T_{k(p)} + T_{dc}} + \left[\frac{N_1}{N_2} \right]^2 R_{dc(s)} \frac{T_{k(s)} + T_{lr}}{T_{k(s)} + T_{dc}} \right]$$

$$+ \left[P_{lc1} - I_{lm(p)}^2 \left[R_{dc(p)} \frac{T_{k(p)} + T_{lm}}{T_{k(p)} + T_{dc}} + \left[\frac{N_1}{N_2} \right]^2 R_{dc(s)} \frac{T_{k(s)} + T_{lm}}{T_{k(s)} + T_{dc}} \right] \right] \frac{T_k + T_{lm}}{T_k + T_{lr}} \qquad (4\text{-}10)$$

(f) The symbols in this section (4.5.3.3) have the following meanings:

$I_{lm(p)}$ is the primary current in amperes,

$I_{lm(s)}$ is the secondary current in amperes,

P_e is the ohmic loss in the transformer in watts at the temperature T_{lm},

$P_{e(p)}$ is the ohmic loss in watts in the primary winding at the temperature T_{lm},

$P_{e(s)}$ is the ohmic loss in watts in the secondary winding at the temperature T_{lm},

P_{er} is the ohmic loss in watts corrected to the reference temperature,

P_{lc1} is the measured load loss in watts, corrected for phase angle error, at the temperature T_{lm},

P_{lc2} is the load loss at the reference temperature,

P_s is the stray loss in watts at the temperature T_{lm},

P_{sr} is the stray loss in watts corrected to the reference temperature,

$R_{dc(p)}$ is the measured dc primary winding resistance in ohms,

$R_{dc(s)}$ is the measured dc secondary winding resistance in ohms,

T_k is the critical temperature in degrees Celsius for the material of the transformer windings. Where copper is used in both primary and secondary windings, T_k is 234.5 °C; where aluminum is used in both primary and secondary windings, T_k is 225 °C; where both copper and aluminum are used in the same transformer, the value of 229 °C is used for T_k,

$T_{k(p)}$ is the critical temperature in degrees Celsius for the material of the primary winding: 234.5 °C if copper and 225 °C if aluminum,

$T_{k(s)}$ is the critical temperature in degrees Celsius for the material of the secondary winding: 234.5 °C if copper and 225 °C if aluminum,

T_{lm} is the temperature in degrees Celsius at which the load loss is measured,

T_{lr} is the reference temperature for the load loss in degrees Celsius,

T_{dc} is the temperature in degrees Celsius at which the resistance values are measured, and

N_1/N_2 is the ratio of the number of turns in the primary winding (N_1) to the number of turns in the secondary winding (N_2); for a primary winding with taps, N_1 is the number of turns used when the voltage applied to the primary winding is the rated primary voltage.

5.0 Determining the Efficiency Value of the Transformer

This section presents the equations to use in determining the efficiency value of the transformer at the required reference conditions and at the specified loading level. The details of measurements are described in sections 3.0 and 4.0. For a transformer that has a configuration of windings which allows for more than one nominal rated voltage, determine its efficiency either at the voltage at which the highest losses occur or at each voltage at which the transformer is rated to operate.

5.1 *Output Loading Level Adjustment.*

If the output loading level for energy efficiency is different from the level at which the load loss power measurements were made, then adjust the corrected load loss power, P_{lc2}, by using equation 5–1 as follows:

$$P_{lc} = P_{lc2} \left[\frac{P_{os}}{P_{or}} \right]^2 = P_{lc2} L^2 \qquad (5\text{-}1)$$

Where:

P_{lc} is the adjusted load loss power to the specified energy efficiency load level,

P_{lc2} is as calculated in section 4.5.3.3,

P_{or} is the rated transformer apparent power (name plate),

P_{os} is the specified energy efficiency load level, where $P_{os} = P_{or}L$, and

L is the per unit load level, e.g., if the load level is 50 percent then ''L'' will be 0.5.

5.2 *Total Loss Power Calculation.*

Calculate the corrected total loss power by using equation 5–2 as follows:

$$P_{ts} = P_{nc} + P_{lc} \qquad (5\text{-}2)$$

Where:

P_{ts} is the corrected total loss power adjusted for the transformer output loading specified by the standard,

P_{nc} is as calculated in section 4.4.3.3, and

P_{lc} is as calculated in section 5.1.

5.3 *Energy Efficiency Calculation.*

Calculate efficiency (η) in percent at specified energy efficiency load level, P_{os}, by using equation 5–3 as follows:

$$\eta = 100\left(\frac{P_{os}}{P_{os} + P_{ts}}\right) \qquad (5\text{-}3)$$

Where:

P_{os} is as described and calculated in section 5.1, and

P_{ts} is as described and calculated in section 5.2.

5.4 *Significant Figures in Power Loss and Efficiency Data.*

In measured and calculated data, retain enough significant figures to provide at least 1 percent resolution in power loss data and 0.01 percent resolution in efficiency data.

6.0 TEST EQUIPMENT CALIBRATION AND CERTIFICATION

Maintain and calibrate test equipment and measuring instruments, maintain calibration records, and perform other test and measurement quality assurance procedures according to the following sections. The calibration of the test set must confirm the accuracy of the test set to that specified in section 2.0, Table 2.1.

6.1 *Test Equipment.*

The party performing the tests shall control, calibrate and maintain measuring and test equipment, whether or not it owns the equipment, has the equipment on loan, or the equipment is provided by another party. Equipment shall be used in a manner which assures that measurement uncertainty is known and is consistent with the required measurement capability.

6.2 *Calibration and Certification.*

The party performing the tests must:

(a) Identify the measurements to be made, the accuracy required (section 2.0) and select the appropriate measurement and test equipment;

(b) At prescribed intervals, or prior to use, identify, check and calibrate, if needed, all measuring and test equipment systems or devices that affect test accuracy, against certified equipment having a known valid relationship to nationally recognized standards; where no such standards exist, the basis used for calibration must be documented;

(c) Establish, document and maintain calibration procedures, including details of equipment type, identification number, location, frequency of checks, check method, acceptance criteria and action to be taken when results are unsatisfactory;

(d) Ensure that the measuring and test equipment is capable of the accuracy and precision necessary, taking into account the voltage, current and power factor of the transformer under test;

(e) Identify measuring and test equipment with a suitable indicator or approved identification record to show the calibration status;

(f) Maintain calibration records for measuring and test equipment;

(g) Assess and document the validity of previous test results when measuring and test equipment is found to be out of calibration;

(h) Ensure that the environmental conditions are suitable for the calibrations, measurements and tests being carried out;

(i) Ensure that the handling, preservation and storage of measuring and test equipment is such that the accuracy and fitness for use is maintained; and

(j) Safeguard measuring and test facilities, including both test hardware and test software, from adjustments which would invalidate the calibration setting.

[71 FR 24999, Apr. 27, 2006, as amended at 71 FR 60662, Oct. 16, 2006]

EFFECTIVE DATE NOTE: At 71 FR 24999, Apr. 27, 2006, appendix A to subpart K of part 431 was added, effective May 30, 2006, except for section 6.2(f) and section 6.2 (b) and (c) which contain information collection requirements and will not become effective until approval has been given by the Office of Management and Budget.

Subpart L—Illuminated Exit Signs

SOURCE: 70 FR 60417, Oct. 18, 2005, unless otherwise noted.

§ 431.201 Purpose and scope.

This subpart contains energy conservation requirements for illuminated exit signs, pursuant to Part B of Title III of the Energy Policy and Conservation Act, as amended, 42 U.S.C. 6291–6309.

§ 431.202 Definitions concerning illuminated exit signs.

Basic model means all units of a given type of covered product (or class thereof) manufactured by one manufacturer, having the same primary energy source, and which have essentially

identical electrical, physical, and functional (or hydraulic) characteristics that affect energy consumption, energy efficiency, water consumption, or water efficiency.

Face means an illuminated side of an illuminated exit sign.

Illuminated exit sign means a sign that—

(1) Is designed to be permanently fixed in place to identify an exit; and

(2) Consists of an electrically powered integral light source that—

(i) Illuminates the legend ''EXIT'' and any directional indicators; and

(ii) Provides contrast between the legend, any directional indicators, and the background.

Input power demand means the amount of power required to continuously illuminate an exit sign model, measured in watts (W). For exit sign models with rechargeable batteries, input power demand shall be measured with batteries at full charge.

[70 FR 60417, Oct. 18, 2005, as amended at 71 FR 71372, Dec. 8, 2006; 76 FR 12504, Mar. 7, 2011]

TEST PROCEDURES

§ 431.203 Materials incorporated by reference.

(a) *General*. The Department incorporates by reference the following test procedures into subpart L of part 431. The Director of the Federal Register has approved the material listed in paragraph (b) of this section for incorporation by reference in accordance with 5 U.S.C. 552(a) and 1 CFR part 51. Any subsequent amendment to this material by the standard-setting organization will not affect the DOE test procedures unless and until DOE amends its test procedures. The Department incorporates the material as it exists on the date of the approval by the Federal Register and a notice of any change in the material will be published in the FEDERAL REGISTER.

(b) *Test procedure incorporated by reference*. Environmental Protection Agency ''ENERGY STAR Program Requirements for Exit Signs,'' Version 2.0 issued January 1, 1999.

(c) *Availability of reference*—(1) *Inspection of test procedure*. The test procedure incorporated by reference are available for inspection at:

(i) National Archives and Records Administration (NARA). For information on the availability of this material at NARA, call (202) 741–6030, or go to: *http://www.archives.gov/federal_register/code_of_federal_regulations/ibr_locations.html*.

(ii) U.S. Department of Energy, Forrestal Building, Room 1J–018 (Resource Room of the Building Technologies Program), 1000 Independence Avenue, SW., Washington, DC 20585–0121, (202) 586–9127, between 9 a.m. and 4 p.m., Monday through Friday, except Federal holidays.

(2) *Obtaining copies of the standard*. Copies of the Environmental Protection Agency ''ENERGY STAR Program Requirements for Exit Signs,'' Version 2.0, may be obtained from the Environmental Protection Agency, Ariel Rios Building, 1200 Pennsylvania Avenue, NW., Washington, DC 20460, (202) 272–0167 or at*http://www.epa.gov*.

[71 FR 71373, Dec. 8, 2006]

§ 431.204 Uniform test method for the measurement of energy consumption of illuminated exit signs.

(a) *Scope*. This section provides the test procedure for measuring, pursuant to EPCA, the input power demand of illuminated exit signs. For purposes of this part 431 and EPCA, the test procedure for measuring the input power demand of illuminated exit signs shall be the test procedure specified in § 431.203(b).

(b) *Testing and Calculations*. Determine the energy efficiency of each covered product by conducting the test procedure, set forth in the Environmental Protection Agency's ''ENERGY STAR Program Requirements for Exit Signs,'' Version 2.0, section 4 (Test Criteria), ''Conditions for testing'' and ''Input power measurement.'' (Incorporated by reference, see § 431.203)

[71 FR 71373, Dec. 8, 2006]

ENERGY CONSERVATION STANDARDS

§ 431.206 Energy conservation standards and their effective dates.

An illuminated exit sign manufactured on or after January 1, 2006, shall

have an input power demand of 5 watts or less per face.

Subpart M—Traffic Signal Modules and Pedestrian Modules

SOURCE: 70 FR 60417, Oct. 18, 2005, unless otherwise noted.

§ 431.221 Purpose and scope.

This subpart contains energy conservation requirements for traffic signal modules and pedestrian modules, pursuant to Part B of Title III of the Energy Policy and Conservation Act, as amended, 42 U.S.C. 6291–6309.

§ 431.222 Definitions concerning traffic signal modules and pedestrian modules.

Basic model means all units of a given type of covered product (or class thereof) manufactured by one manufacturer, having the same primary energy source, and which have essentially identical electrical, physical, and functional (or hydraulic) characteristics that affect energy consumption, energy efficiency, water consumption, or water efficiency.

Maximum wattage means the power consumed by the module after being operated for 60 minutes while mounted in a temperature testing chamber so that the lensed portion of the module is outside the chamber, all portions of the module behind the lens are within the chamber at a temperature of 74 °C and the air temperature in front of the lens is maintained at a minimum of 49 °C.

Nominal wattage means the power consumed by the module when it is operated within a chamber at a temperature of 25 °C after the signal has been operated for 60 minutes.

Pedestrian module means a light signal used to convey movement information to pedestrians.

Traffic signal module means a standard 8-inch (200 mm) or 12-inch (300 mm) traffic signal indication that—

(1) Consists of a light source, a lens, and all other parts necessary for operation; and

(2) Communicates movement messages to drivers through red, amber, and green colors.

[70 FR 60417, Oct. 18, 2005, as amended at 71 FR 71373, Dec. 8, 2006; 76 FR 12504, Mar. 7, 2011]

TEST PROCEDURES

§ 431.223 Materials incorporated by reference.

(a) *General*. The Department incorporates by reference the following test procedures into subpart M of part 431. The Director of the Federal Register has approved the material listed in paragraph (b) of this section for incorporation by reference in accordance with 5 U.S.C. 552(a) and 1 CFR part 51. Any subsequent amendment to this material by the standard-setting organization will not affect the DOE test procedures unless and until DOE amends its test procedures. The Department incorporates the material as it exists on the date of the approval by the Federal Register and a notice of any change in the material will be published in the FEDERAL REGISTER.

(b) *List of test procedures incorporated by reference*. (1) Environmental Protection Agency, ''ENERGY STAR Program Requirements for Traffic Signals,'' Version 1.1 issued February 4, 2003.

(2) Institute of Transportation Engineers (ITE), ''Vehicle Traffic Control Signal Heads: Light Emitting Diode (LED) Circular Signal Supplement,'' June 27, 2005.

(c) *Availability of references*—(1) *Inspection of test procedures*. The test procedures incorporated by reference are available for inspection at:

(i) National Archives and Records Administration (NARA). For information on the availability of this material at NARA, call (202) 741–6030, or go to: *http://www.archives.gov/federal_register/code_of_federal_regulations/ibr_locations.html*.

(ii) U.S. Department of Energy, Forrestal Building, Room 1J–018 (Resource Room of the Building Technologies Program), 1000 Independence Avenue, SW., Washington, DC 20585–0121, (202) 586–9127, between 9 a.m. and 4 p.m.,

Monday through Friday, except Federal holidays.

(2) *Obtaining copies of standards.* Standards incorporated by reference may be obtained from the following sources:

(i) Copies of the Environmental Protection Agency ''ENERGY STAR Program Requirements for Traffic Signals,'' Version 1.1, may be obtained from the Environmental Protection Agency, Ariel Rios Building, 1200 Pennsylvania Avenue, NW., Washington, DC 20460, (202) 272–0167 or at *http://www.epa.gov*.

(ii) Institute of Transportation Engineers, 1099 14th Street, NW., Suite 300 West, Washington, DC 20005–3438, (202) 289–0222, or *ite_staff@ite.org*.

[71 FR 71373, Dec. 8, 2006]

§ 431.224 Uniform test method for the measurement of energy consumption for traffic signal modules and pedestrian modules.

(a) *Scope.* This section provides the test procedures for measuring, pursuant to EPCA, the maximum wattage and nominal wattage of traffic signal modules and pedestrian modules. For purposes of 10 CFR part 431 and EPCA, the test procedures for measuring the maximum wattage and nominal wattage of traffic signal modules and pedestrian modules shall be the test procedures specified in § 431.223(b).

(b) *Testing and Calculations.* Determine the nominal wattage and maximum wattage of each covered traffic signal module or pedestrian module by conducting the test procedure set forth in Environmental Protection Agency, ''ENERGY STAR Program Requirements for Traffic Signals,'' Version 1.1, section 1, ''Definitions,'' and section 4, ''Test Criteria.'' (Incorporated by reference, see § 431.223) Use a wattmeter having an accuracy of ±1% to measure the nominal wattage and maximum wattage of a red and green traffic signal module, and a pedestrian module when conducting the photometric and colormetric tests as specified by the testing procedures in VTCSH 2005.

[71 FR 71373, Dec. 8, 2006]

ENERGY CONSERVATION STANDARDS

§ 431.226 Energy conservation standards and their effective dates.

Any traffic signal module or pedestrian module manufactured on or after January 1, 2006, shall meet both of the following requirements:

(a) Have a nominal wattage and maximum wattage no greater than:

	Maximum wattage (at 74 °C)	Nominal wattage (at 25 °C)
Traffic Signal Module Type:		
12″ Red Ball	17	11
8″ Red Ball	13	8
12″ Red Arrow	12	9
12″ Green Ball	15	15
8″ Green Ball	12	12
12″ Green Arrow	11	11
Pedestrian Module Type:		
Combination Walking Man/Hand	16	13
Walking Man	12	9
Orange Hand	16	13

(b) Be installed with compatible, electrically connected signal control interface devices and conflict monitoring systems.

[70 FR 60417, Oct. 18, 2005, as amended at 71 FR 71374, Dec. 8, 2006]

Subpart N—Unit Heaters

SOURCE: 70 FR 60418, Oct. 18, 2005, unless otherwise noted.

§ 431.241 Purpose and scope.

This subpart contains energy conservation requirements for unit heaters, pursuant to Part B of Title III of the Energy Policy and Conservation Act, as amended, 42 U.S.C. 6291–6309.

§ 431.242 Definitions concerning unit heaters.

Automatic flue damper means a device installed in the flue outlet or in the inlet of or upstream of the draft control device of an individual, automatically operated, fossil fuel-fired appliance that is designed to automatically open the flue outlet during appliance operation and to automatically close the flue outlet when the appliance is in a standby condition.

Automatic vent damper means a device intended for installation in the venting system of an individual, automatically

operated, fossil fuel-fired appliance either in the outlet or downstream of the appliance draft control device, which is designed to automatically open the venting system when the appliance is in operation and to automatically close off the venting system when the appliance is in a standby or shutdown condition.

Basic model means all units of a given type of covered product (or class thereof) manufactured by one manufacturer, having the same primary energy source, and which have essentially identical electrical, physical, and functional (or hydraulic) characteristics that affect energy consumption, energy efficiency, water consumption, or water efficiency.

Intermittent ignition device means an ignition device in which the ignition source is automatically shut off when the appliance is in an off or standby condition.

Power venting means a venting system that uses a separate fan, either integral to the appliance or attached to the vent pipe, to convey products of combustion and excess or dilution air through the vent pipe.

Unit heater means a self-contained fan-type heater designed to be installed within the heated space; however, the term does not include a warm air furnace.

Warm air furnace means commercial warm air furnace as defined in § 431.72.

[70 FR 60418, Oct. 18, 2005, as amended at 71 FR 71374, Dec. 8, 2006; 76 FR 12504, Mar. 7, 2011]

TEST PROCEDURES [RESERVED]

ENERGY CONSERVATION STANDARDS

§ 431.246 Energy conservation standards and their effective dates.

A unit heater manufactured on or after August 8, 2008, shall:

(a) Be equipped with an intermittent ignition device; and

(b) Have power venting or an automatic flue damper. An automatic vent damper is an acceptable alternative to an automatic flue damper for those unit heaters where combustion air is drawn from the conditioned space.

[70 FR 60418, Oct. 18, 2005, as amended at 71 FR 71374, Dec. 8, 2006]

Subpart O—Commercial Prerinse Spray Valves

SOURCE: 70 FR 60418, Oct. 18, 2005, unless otherwise noted.

§ 431.261 Purpose and scope.

This subpart contains energy conservation requirements for commercial prerinse spray valves, pursuant to section 135 of the Energy Policy Act of 2005, Pub. L. 109–58.

§ 431.262 Definitions concerning commercial prerinse spray valves.

Basic model means all units of a given type of covered product (or class thereof) manufactured by one manufacturer, having the same primary energy source, and which have essentially identical electrical, physical, and functional (or hydraulic) characteristics that affect energy consumption, energy efficiency, water consumption, or water efficiency.

Commercial prerinse spray valve means a handheld device designed and marketed for use with commercial dishwashing and ware washing equipment that sprays water on dishes, flatware, and other food service items for the purpose of removing food residue before cleaning the items.

[70 FR 60418, Oct. 18, 2005, as amended at 71 FR 71374, Dec. 8, 2006; 76 FR 12504, Mar. 7, 2011]

EFFECTIVE DATE NOTE: At 80 FR 81453, Dec. 30, 2015, § 431.262 was revised, effective Jan. 29, 2016. For the convenience of the user, the revised text is set forth as follows:

§ 431.262 Definitions.

As used in this subpart:

Basic model means all spray settings of a given class manufactured by one manufacturer, which have essentially identical physical and functional (or hydraulic) characteristics that affect water consumption or water efficiency.

Commercial prerinse spray valve means a handheld device that has a release-to-close valve and is suitable for removing food residue from food service items before cleaning them in commercial dishwashing or ware washing equipment.

Spray force means the amount of force exerted onto the spray disc, measured in ounce-force (ozf).

TEST PROCEDURES

§ 431.263 Materials incorporated by reference.

(a) DOE incorporates by reference the following standard into part 431. The material listed has been approved for incorporation by reference by the Director of the Federal Register in accordance with 5 U.S.C. 552(a) and 1 CFR part 51. Any subsequent amendment to a standard by the standard-setting organization will not affect the DOE regulations unless and until amended by DOE. Material is incorporated as it exists on the date of the approval and a notice of any change in the material will be published in the FEDERAL REGISTER. All approved material is available for inspection at the National Archives and Records Administration (NARA). For information on the availability of this material at NARA, call (202) 741–6030, or go to: *http://www.archives.gov/federal_register/code_of_federal_regulations/ibr_locations.html*. Also, this material is available for inspection at U.S. Department of Energy, Office of Energy Efficiency and Renewable Energy, Building Technologies Program, 6th Floor, 950 L'Enfant Plaza SW., Washington, DC 20024, (202) 586–2945, or go to: *http://www1.eere.energy.gov/buildings/appliance_standards*. This standard can be obtained from the source below.

(b) *ASTM*. American Society for Testing and Materials International, 100 Barr Harbor Drive, P.O. Box C700, West Conshohocken, PA 19428–2959, (610) 832–9585, or got to *http://www.astm.org*.

(1) ASTM Standard F2324–03 (Reapproved 2009), (''ASTM F2324–03 (2009)''), Standard Test Method for Prerinse Spray Valves, approved May 1, 2009; IBR approved for § 431.264.

(2) [Reserved]

[78 FR 62987, Oct. 23, 2013]

EFFECTIVE DATE NOTE: At 80 FR 81453, Dec. 30, 2015, § 431.263 was amended by revising paragraph (b)(1), effective Jan. 29, 2016. For the convenience of the user, the revised text is set forth as follows:

§ 431.263 Materials incorporated by reference.

* * * * *

(b) * * *

(1) ASTM Standard F2324–13, (''ASTM F2324–13''), Standard Test Method for Prerinse Spray Valves, approved June 1, 2013; IBR approved for § 431.264.

* * * * *

§ 431.264 Uniform test method for the measurement of flow rate for commercial prerinse spray valves.

(a) *Scope*. This section provides the test procedure for measuring, pursuant to EPCA, the water consumption flow rate of commercial prerinse spray valves.

(b) *Testing and Calculations*. The test procedure to determine the water consumption flow rate for prerinse spray valves, expressed in gallons per minute (gpm) or liters per minute (L/min), shall be conducted in accordance with the test requirements specified in sections 4.1 and 4.2 (Summary of Test Method), 5.1 (Significance and Use), 6.1 through 6.9 (Apparatus) except 6.5, 9.1 through 9.5 (Preparation of Apparatus), and 10.1 through 10.2.5. (Procedure), and calculations in accordance with sections 11.1 through 11.3.2 (Calculation and Report) of ASTM F2324–03 (2009), (incorporated by reference, see § 431.263). Perform only the procedures pertinent to the measurement of flow rate. Record measurements at the resolution of the test instrumentation. Round off calculations to the same number of significant digits as the previous step. Round the final water consumption value to one decimal place as follows:

(1) A fractional number at or above the midpoint between two consecutive decimal places shall be rounded up to the higher of the two decimal places; or

(2) A fractional number below the midpoint between two consecutive decimal places shall be rounded down to the lower of the two decimal places.

[71 FR 71374, Dec. 8, 2006, as amended at 78 FR 62988, Oct. 23, 2013]

EFFECTIVE DATE NOTE: At 80 FR 81453, Dec. 30, 2015, § 431.264 was revised, effective Jan. 29, 2016. For the convenience of the user, the revised text is set forth as follows:

§ 431.264 Uniform test method to measure flow rate and spray force of commercial prerinse spray valves.

(a) *Scope.* This section provides the test procedure to measure the flow rate and spray force of a commercial prerinse spray valve.

(b) *Testing and calculations for a unit with a single spray setting*—(1) *Flow rate.* (i) Test each unit in accordance with the requirements of sections 6.1 through 6.9 (Apparatus) (except 6.4 and 6.7), 9.1 through 9.4 (Preparation of Apparatus), and 10.1 through 10.2.5 (Procedure) of ASTM F2324–13, (incorporated by reference, see § 431.263). Precatory language in the ASTM F2324–13 is to be treated as mandatory for the purpose of testing. In section 9.1 of ASTM F2324–13, the second instance of ''prerinse spray valve'' refers to the spring-style deck-mounted prerinse unit defined in section 6.8. In lieu of using manufacturer installation instructions or packaging, always connect the commercial prerinse spray valve to the flex tubing for testing. Normalize the weight of the water to calculate flow rate using Equation 1, where W_{water} is the weight normalized to a 1 minute time period, W_1 is the weight of the water in the carboy at the conclusion of the flow rate test, and t_1 is the total recorded time of the flow rate test.

$$W_{water} = W_1 \, x \, \frac{60\,s}{t_1} \qquad \text{(Eq. 1)}$$

(ii) Perform calculations in accordance with section 11.3.1 (Calculation and Report). Record the water temperature (°F) and dynamic water pressure (psi) once at the start for each run of the test. Record the time (min), the normalized weight of water in the carboy (lb) and the resulting flow rate (gpm) once at the end of each run of the test. Record flow rate measurements of time (min) and weight (lb) at the resolutions of the test instrumentation. Perform three runs on each unit, as specified in section 10.2.5 of ASTM F2324–13, but disregard any references to Annex A1. Then, for each unit, calculate the mean of the three flow rate values determined from each run. Round the final value for flow rate to two decimal places and record that value.

(2) *Spray force.* Test each unit in accordance with the test requirements specified in sections 6.2 and 6.4 through 6.9 (Apparatus), 9.1 through 9.5.3.2 (Preparation of Apparatus), and 10.3.1 through 10.3.8 (Procedure) of ASTM F2324–13. In section 9.1 of ASTM F2324–13, the second instance of ''prerinse spray valve'' refers to the spring-style deck-mounted prerinse unit defined in section 6.8. In lieu of using manufacturer installation instructions or packaging, always connect the commercial prerinse spray valve to the flex tubing for testing. Record the water temperature (°F) and dynamic water pressure (psi) once at the start for each run of the test. In order to calculate the mean spray force value for the unit under test, there are two measurements per run and there are three runs per test. For each run of the test, record a minimum of two spray force measurements and calculate the mean of the measurements over the 15-second time period of stabilized flow during spray force testing. Record the time (min) once at the end of each run of the test. Record spray force measurements at the resolution of the test instrumentation. Conduct three runs on each unit, as specified in section 10.3.8 of ASTM F2324–13, but disregard any references to Annex A1. Ensure the unit has been stabilized separately during each run. Then for each unit, calculate and record the mean of the spray force values determined from each run. Round the final value for spray force to one decimal place.

(c) *Testing and calculations for a unit with multiple spray settings.* If a unit has multiple user-selectable spray settings, or includes multiple spray faces that can be installed, for each possible spray setting or spray face:

(1) Measure both the flow rate and spray force according to paragraphs (b)(1) and (2) of this section (including calculating the mean flow rate and mean spray force) for each spray setting; and

(2) Record the mean flow rate for each spray setting, rounded to two decimal places. Record the mean spray force for each spray setting, rounded to one decimal place.

ENERGY CONSERVATION STANDARDS

§ 431.266 Energy conservation standards and their effective dates.

Commercial prerinse spray valves manufactured on or after January 1, 2006, shall have a flow rate of not more than 1.6 gallons per minute.

EFFECTIVE DATE NOTE: At 80 FR 81454, Dec. 30, 2015, § 431.266 was revised, effective Jan. 29, 2016. For the convenience of the user, the revised text is set forth as follows:

§ 431.266 Energy conservation standards and their effective dates.

Commercial prerinse spray valves manufactured on or after January 1, 2006, shall have a flow rate of not more than 1.6 gallons

per minute. For the purposes of this standard, a *commercial prerinse spray valve* is a handheld device designed and marketed for use with commercial dishwashing and ware washing equipment that sprays water on dishes, flatware, and other food service items for the purpose of removing food residue before cleaning the items.

Subpart P—Mercury Vapor Lamp Ballasts

SOURCE: 70 FR 60418, Oct. 18, 2005, unless otherwise noted.

§ 431.281 Purpose and scope.

This subpart contains energy conservation requirements for mercury vapor lamp ballasts, pursuant to section 135 of the Energy Policy Act of 2005, Pub. L. 109–58.

§ 431.282 Definitions concerning mercury vapor lamp ballasts.

Ballast means a device used with an electric discharge lamp to obtain necessary circuit conditions (voltage, current, and waveform) for starting and operating.

High intensity discharge lamp means an electric-discharge lamp in which—

(1) The light-producing arc is stabilized by the arc tube wall temperature; and

(2) The arc tube wall loading is in excess of 3 Watts/cm^2, including such lamps that are mercury vapor, metal halide, and high-pressure sodium lamps.

Mercury vapor lamp means a high intensity discharge lamp, including clear, phosphor-coated, and self-ballasted screw base lamps, in which the major portion of the light is produced by radiation from mercury typically operating at a partial vapor pressure in excess of 100,000 Pa (approximately 1 atm).

Mercury vapor lamp ballast means a device that is designed and marketed to start and operate mercury vapor lamps intended for general illumination by providing the necessary voltage and current.

Specialty application mercury vapor lamp ballast means a mercury vapor lamp ballast that—

(1) Is designed and marketed for operation of mercury vapor lamps used in quality inspection, industrial processing, or scientific use, including fluorescent microscopy and ultraviolet curing; and

(2) In the case of a specialty application mercury vapor lamp ballast, the label of which—

(i) Provides that the specialty application mercury vapor lamp ballast is 'For specialty applications only, not for general illumination'; and

(ii) Specifies the specific applications for which the ballast is designed.

[74 FR 12074, Mar. 23, 2009]

TEST PROCEDURES [RESERVED]

ENERGY CONSERVATION STANDARDS

§ 431.286 Energy conservation standards and their effective dates.

Mercury vapor lamp ballasts, other than specialty application mercury vapor lamp ballasts, shall not be manufactured or imported after January 1, 2008.

[74 FR 12074, Mar. 23, 2009]

Subpart Q—Refrigerated Bottled or Canned Beverage Vending Machines

SOURCE: 71 FR 71375, Dec. 8, 2006, unless otherwise noted.

§ 431.291 Scope.

This subpart specifies test procedures and energy conservation standards for certain commercial refrigerated bottled or canned beverage vending machines, pursuant to part A of Title III of the Energy Policy and Conservation Act, as amended, 42 U.S.C. 6291–6309. The regulatory provisions of §§ 430.33 and 430.34 and subparts D and E of part 430 of this chapter are applicable to refrigerated bottled or canned beverage vending machines.

[80 FR 45792, July 31, 2015]

§ 431.292 Definitions concerning refrigerated bottled or canned beverage vending machines.

Basic model means all units of a given type of covered product (or class thereof) manufactured by one manufacturer, having the same primary energy source, and which have essentially

identical electrical, physical, and functional (or hydraulic) characteristics that affect energy consumption, energy efficiency, water consumption, or water efficiency.

Bottled or canned beverage means a beverage in a sealed container.

Class A means a refrigerated bottled or canned beverage vending machine that is fully cooled, and is not a combination vending machine.

Class B means any refrigerated bottled or canned beverage vending machine not considered to be Class A, and is not a combination vending machine.

Combination vending machine means a refrigerated bottled or canned beverage vending machine that also has non-refrigerated volumes for the purpose of vending other, non-''sealed beverage'' merchandise.

Refrigerated bottled or canned beverage vending machine means a commercial refrigerator (as defined at § 431.62) that cools bottled or canned beverages and dispenses the bottled or canned beverages on payment.

V means the refrigerated volume (ft^3) of the refrigerated bottled or canned beverage vending machine, as measured by Appendix C of ANSI/ASHRAE 32.1 (incorporated by reference, see § 431.293).

[71 FR 71375, Dec. 8, 2006, as amended at 74 FR 44967, Aug. 31, 2009; 76 FR 12504, Mar. 7, 2011; 80 FR 45792, July 31, 2015]

TEST PROCEDURES

§ 431.293 Materials incorporated by reference.

(a) *General*. DOE incorporates by reference the following standards into subpart Q of part 431. The material listed has been approved for incorporation by reference by the Director of the Federal Register in accordance with 5 U.S.C. 552(a) and 1 CFR part 51. Any subsequent amendment to a standard by the standard-setting organization will not affect the DOE regulations unless and until amended by DOE. Material is incorporated as it exists on the date of the approval and a notice of any change in the material will be published in the FEDERAL REGISTER. All approved material is available for inspection at the National Archives and Records Administration (NARA). For information on the availability of this material at NARA, call (202) 741–6030 or visit *http://www.archives.gov/federal_register/code_of_federal_regulations/ibr_locations.html*. This material is also available for inspection at U.S. Department of Energy, Office of Energy Efficiency and Renewable Energy, Building Technologies Program, 6th Floor, 950 L'Enfant Plaza, SW., Washington, DC 20024, 202–586–2945, or visit *http://www1.eere.energy.gov/buildings/appliance_standards*. Standards can be obtained from the sources listed below.

(b) *ASHRAE*. American Society of Heating, Refrigerating and Air-Conditioning Engineers, 1791 Tullie Circle, NE. Atlanta, GA 30329, 404–636–8400, or *www.ashrae.org*.

(1) ANSI/ASHRAE Standard 32.1–2010, (''ANSI/ASHRAE 32.1''), ''Methods of Testing for Rating Vending Machines for Sealed Beverages,'' approved July 23, 2010, IBR approved for § 431.292 and appendices A and B to subpart Q of this part.

(2) [Reserved]

[74 FR 44967, Aug. 31, 2009, as amended at 80 FR 45792, July 31, 2015]

§ 431.294 Uniform test method for the measurement of energy consumption of refrigerated bottled or canned beverage vending machines.

(a) *Scope*. This section provides test procedures for measuring, pursuant to EPCA, the energy consumption of refrigerated bottled or canned beverage vending machines.

(b) *Testing and Calculations*. Determine the daily energy consumption of each covered refrigerated bottled or canned beverage vending machine by conducting the appropriate test procedure set forth in appendix A or B to this subpart.

[71 FR 71375, Dec. 8, 2006, as amended at 80 FR 45793, July 31, 2015]

ENERGY CONSERVATION STANDARDS

§ 431.296 Energy conservation standards and their effective dates.

Each refrigerated bottled or canned beverage vending machine manufactured on or after August 31, 2012 shall have a daily energy consumption (in

kilowatt hours per day), when measured at the 75 °F ±2 °F and 45 ±5% RH condition, that does not exceed the following:

Equipment class	Maximum daily energy consumption (kilowatt hours per day)
Class A	MDEC = 0.055 × V + 2.56.
Class B	MDEC = 0.073 × V + 3.16.
Combination Vending Machines	[Reserved].

[74 FR 44967, Aug. 31, 2009, as amended at 80 FR 45793, July 31, 2015]

APPENDIX A TO SUBPART Q OF PART 431—UNIFORM TEST METHOD FOR THE MEASUREMENT OF ENERGY CONSUMPTION OF REFRIGERATED BOTTLED OR CANNED BEVERAGE VENDING MACHINES

NOTE: Prior to January 27, 2016, manufacturers must make any representations with respect to the energy use or efficiency of refrigerated bottled or canned beverage vending machines in accordance with the results of testing pursuant to this Appendix A or the procedures in 10 CFR 431.294 as it appeared in the edition of 10 CFR parts 200 to 499 revised as of January 1, 2015. Any representations made with respect to the energy use or efficiency of such refrigerated beverage vending machines must be in accordance with whichever version is selected. On or after January 27, 2016, manufacturers must make any representations with respect to energy use or efficiency in accordance with the results of testing pursuant to this Appendix A to demonstrate compliance with the energy conservation standards at 10 CFR 431.296, for which compliance was required as of August 31, 2012.

1. *General*. Section 3, ''Definitions''; section 4, ''Instruments''; section 5, ''Vendible Capacity''; section 6, ''Test Conditions''; section 7.1, ''Test Procedures—General Requirements''; and section 7.2, ''Energy Consumption Test'' of ANSI/ASHRAE 32.1 (incorporated by reference; see §431.293) apply to this appendix except as noted throughout this appendix. In cases where there is a conflict, the language of the test procedure in this appendix takes precedence over ANSI/ASHRAE 32.1.

1.1. *Instruments*. In addition to the instrument accuracy requirements in section 4, ''Instruments,'' of ANSI/ASHRAE 32.1 (incorporated by reference, see §431.293), humidity shall be measured with a calibrated instrument accurate to ±2 percent RH at the specified ambient relative humidity condition specified in section 2.1.2 of this appendix.

1.2. *Definitions*. In addition to the definitions specified in section 3, ''Definitions,'' of ANSI/ASHRAE 32.1 (incorporated by reference, see §431.293), the following definition is also applicable to this appendix.

External accessory standby mode means the mode of operation in which any external, integral customer display signs, lighting, or digital screens:

(1) Are connected to mains power;

(2) Do not produce the intended illumination, display, or interaction functionality; and

(3) Can be switched into another mode automatically with only a remote user-generated or an internal signal.

Instantaneous average next-to-vend beverage temperature means the spatial average of all standard test packages in the next-to-vend beverages positions at a given time.

Integrated average temperature means the average temperature of all standard test package measurements in the next-to-vend beverage positions taken over the duration of the test, expressed in degrees Fahrenheit (°F).

Lowest application product temperature means the lowest integrated average temperature a given basic model is capable of maintaining so as to comply with the temperature stabilization requirements specified in section 7.2.2.2 of ANSI/ASHRAE 32.1 (incorporated by reference, see §431.293).

2. *Test Procedure*.

2.1. *Test Conditions*. The test conditions specified in section 6, ''Test Conditions,'' of ANSI/ASHRAE 32.1 (incorporated by reference, see §431.293) apply to this appendix except that in section 6.1, ''Voltage and Frequency,'' of ANSI/ASHRAE 32.1, the voltage and frequency tolerances specified in section 6.1.a of ANSI/ASHRAE 32.1 also apply equivalently to section 6.1.b of ANSI/ASHRAE 32.1 for equipment with dual nameplate voltages.

2.1.1. *Average Beverage Temperature*. The integrated average temperature measured during the test must be within ±1 °F of the value specified in Table A.1 of this appendix or the lowest application product temperature for models tested in accordance with paragraph 2.1.3 of this appendix. The measurement of integrated average temperature must begin after temperature stabilization has been achieved and continue for the following 24 consecutive hours. All references to ''Table 1'' in ANSI/ASHRAE 32.1 (incorporated by reference, see §431.293) shall instead be interpreted as references to Table A.1 of this appendix and all references to ''average beverage temperature'' in ANSI/ASHRAE 32.1 shall instead be interpreted as references to the integrated average temperature as defined in section 1.2 of this appendix of this subpart, except as noted in section 2.1.1.1 of this appendix.

2.1.1.1. *Temperature Stabilization*. Temperature stabilization shall be determined in accordance with section 7.2.2.2 of ANSI/ASHRAE 32.1 (incorporated by reference

§ 431.293), except that the reference to ''average beverage temperature'' shall instead refer to the ''instantaneous average next-to-vend beverage temperature,'' as defined in section 1.2 of this appendix, and the reference to ''Table 1'' shall instead refer to Table A.1 of this appendix. That is, temperature stabilization is considered to be achieved 24 hours after the instantaneous average next-to-vend beverage temperature reaches the specified value (see Table A.1) and energy consumption for two successive 6 hour periods are within 2 percent of each other.

2.1.2. *Ambient Test Conditions.* The refrigerated bottled or canned beverage vending machine must be tested at the test conditions and tolerances specified in the following Table A.1 of this appendix. The specified ambient temperature and humidity conditions shall be maintained within the ranges specified for each recorded measurement. All references to ''Table 1'' in ANSI/ASHRAE 32.1 (incorporated by reference, see § 431.293) shall instead be interpreted as references to Table A.1 of this appendix. In contrast to the requirements of section 6.1 and Table 1 of ANSI/ASHRAE 32.1, conduct testing only one time at the conditions referenced in Table A.1 of this appendix. Testing at alternate ambient conditions is not required or permitted.

TABLE A.1—AMBIENT TEMPERATURE AND RELATIVE HUMIDITY SPECIFIED VALUE AND TOLERANCE

Test and pretest condition	Value	Tolerance	Acceptable range (based on value and tolerance)
Instantaneous Average Next-to-Vend Temperature.	36 °F	±1 °F	35–37 °F.
Integrated Average Temperature	36 °F	±1 °F	N/A (value is averaged throughout test).
Ambient Temperature	75 °F	±2 °F	73–77 °F.
Relative Humidity	45 percent RH	±5 percent RH	40–50 percent RH.

2.1.3. *Lowest Application Product Temperature.* If a refrigerated bottled or canned beverage vending machine is not capable of maintaining an integrated average temperature of 36 °F (±1 °F) during the 24 hour test period, the unit must be tested at the lowest application product temperature, as defined in section 1.2 of this appendix. For refrigerated bottled or canned beverage vending machines equipped with a thermostat, the lowest application product temperature is the integrated average temperature achieved at the lowest thermostat setting.

2.2. *Equipment Installation and Test Set Up.* Except as provided in this appendix, the test procedure for energy consumption of refrigerated bottled or canned beverage vending machines shall be conducted in accordance with the methods specified in sections 7.1 through 7.2.2.3 under ''Test Procedures'' of ANSI/ASHRAE 32.1 (incorporated by reference, see § 431.293).

2.2.1. *Equipment Loading.* Configure refrigerated bottled or canned beverage vending machines to hold the maximum number of standard products in the refrigerated compartment(s) and place standard test packages as specified in section 2.2.1.1 or 2.2.1.2 of this appendix.

2.2.1.1. *Placement of Standard Test Packages for Equipment with Products Arranged Horizontally.* For refrigerated bottled or canned beverage vending machines with products arranged horizontally (*e.g.,* on shelves or in product spirals), place standard test packages in the refrigerated compartment(s) in the following locations, as shown in Figure A.1:

(a) For odd-number shelves, when counting starting from the bottom shelf, standard test packages shall be placed at:

(1) The left-most next-to-vend product location,

(2) The right-most next-to-vend product location, and

(3) For equipment with greater than or equal to five next-to-vend product locations on each shelf, either:

(A) The next-to-vend product location in the center of the shelf (*i.e.,* equidistant from the left-most and right-most next-to-vend product locations) if there are an odd number of next-to-vend products on the shelf or

(B) The next-to-vend product location immediately to the right and the left of the center position if there are an even number of next-to-vend products on the shelf.

(b) For even-numbered shelves, when counting from the bottom shelf, standard test packages shall be places at either:

(1) For equipment with less than or equal to six next-to-vend product locations on each shelf, the next-to-vend product location(s):

(A) One location towards the center from the left-most next-to-vend product location; and

(B) One location towards to the center from the right-most next-to-vend product location, or

(2) For equipment with greater than six next-to-vend product locations on each shelf, the next-to-vend product locations

(A) Two locations towards the center from the left-most next-to-vend product location; and

(B) Two locations towards to the center from the right-most next-to-vend product location.

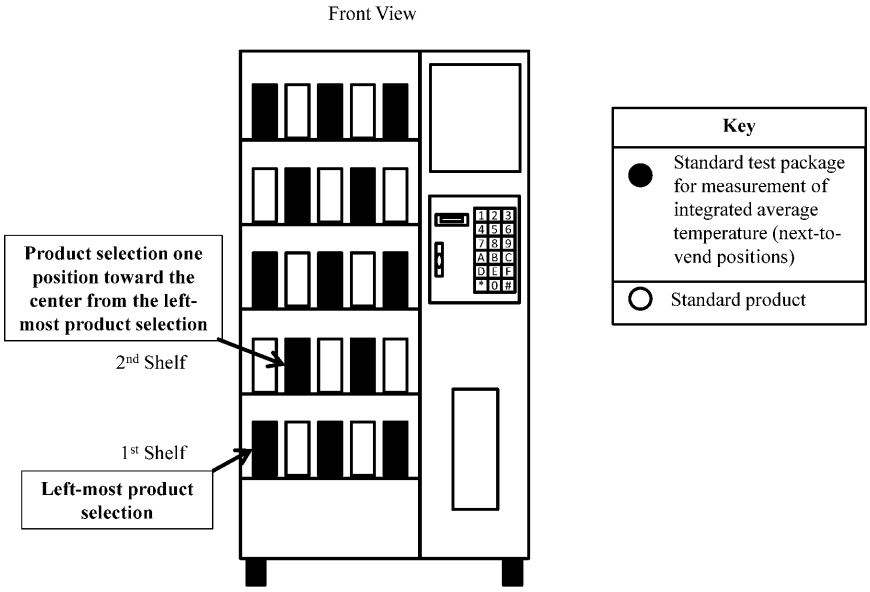

Figure A.1. Location of Standard Test Packages for Refrigerated Bottled or Canned Beverage Vending Machines with Products Arranged Horizontally and Five Next-to-Vend Product Locations on Each Shelf.

2.2.1.2. *Placement of Standard Test Packages for Equipment with Products Arranged Vertically*. For refrigerated bottled or canned beverage vending machines with products arranged vertically (*e.g.*, in stacks), place standard test packages in the refrigerated compartment(s) in each next-to-vend product location.

2.2.1.3. *Loading of Combination Vending Machines*. For combination vending machines, the non-refrigerated compartment(s) must not be loaded with any standard products, test packages, or other vendible merchandise.

2.2.1.4. *Standard Products*. The standard product shall be standard 12-ounce aluminum beverage cans filled with a liquid with a density of 1.0 grams per milliliter (g/mL) ± 0.1 g/mL at 36 °F. For product storage racks that are not capable of vending 12-ounce cans, but are capable of vending 20-ounce bottles, the standard product shall be 20-ounce plastic bottles filled with a liquid with a density of 1.0 g/mL ± 0.1 g/mL at 36 °F. For product storage racks that are not capable of vending 12-ounce cans or 20-ounce bottles, the standard product shall be the packaging and contents specified by the manufacturer in product literature as the standard product (*i.e.*, the specific merchandise the refrigerated bottled or canned beverage vending machine is designed to vend).

2.2.1.5. *Standard Test Packages*. A standard test package is a standard product, as specified in 2.2.1.4 of this appendix, altered to include a temperature-measuring instrument at its center of mass.

2.2.2. *Sensor Placement*. The integrated average temperature of next-to-vend beverages shall be measured in standard test packages in the next-to-vend product locations specified in section 2.2.1.1 of this appendix. Do not run the thermocouple wire and other measurement apparatus through the dispensing door; the thermocouple wire and other measurement apparatus must be configured and sealed so as to minimize air flow between the interior refrigerated volume and the ambient room air. If a manufacturer chooses to employ a method other than routing thermocouple and sensor wires through the door

gasket and ensuring the gasket is compressed around the wire to ensure a good seal, then it must maintain a record of the method used in the data underlying that basic model's certification pursuant to 10 CFR 429.71.

2.2.3. *Accessories.* (a) All standard components that would be used during normal operation of the model in the field and are necessary to provide sufficient functionality for cooling and vending products in field installations (*i.e.,* product inventory, temperature management, product merchandising (including, *e.g.,* lighting or signage), product selection, and product transport and delivery) shall be in place during testing and shall be set to the maximum energy-consuming setting if manually adjustable, except that the specific components and accessories listed in the subsequent sections shall be operated as stated. Components not necessary for the inventory, temperature management, product merchandising (*e.g.,* lighting or signage), product selection, and or product transport and delivery shall be de-energized. If systems not required for the primary functionality of the machine as stated in this section cannot be de-energized without preventing the operation of the machine, then they shall be placed in the lowest energy consuming state.

(b) Instead of testing pursuant to section 7.2.2.4 of ANSI/ASHRAE 32.1 (incorporated by reference, see §431.293), provide, if necessary, any physical stimuli or other input to the machine needed to prevent automatic activation of energy management systems that can be adjusted by the machine operator during the test period. Automatic energy management systems that cannot be adjusted by the machine operator may be enabled, as specified by section 7.2.1 of ANSI/ASHRAE 32.1.

2.2.3.1. *Payment Mechanisms.* Refrigerated bottled or canned beverage vending machines shall be tested with no payment mechanism in place, the payment mechanism in place but de-energized, or the payment mechanism in place but set to the lowest energy consuming state, if it cannot be de-energized. A default payment mechanism energy consumption value of 0.20 kWh/day shall be added to the primary rated energy consumption per day, as required in section 2.3 of this appendix.

2.2.3.2. *Internal Lighting.* All lighting that is contained within or is part of the internal physical boundary of the refrigerated bottled or canned beverage vending machine, as established by the top, bottom, and side panels of the equipment, shall be placed in its maximum energy consuming state.

2.2.3.3. *External Customer Display Signs, Lights, and Digital Screens.* All external customer display signs, lights, and digital screens that are independent from the refrigeration or vending performance of the refrigerated bottled or canned beverage vending machine must be disconnected, disabled, or otherwise de-energized for the duration of testing. Customer display signs, lighting, and digital screens that are integrated into the beverage vending machine cabinet or controls such that they cannot be de-energized without disabling the refrigeration or vending functions of the refrigerated bottled or canned beverage vending machine or modifying the circuitry must be placed in external accessory standby mode, if available, or their lowest energy-consuming state. Digital displays that also serve a vending or money processing function must be placed in the lowest energy-consuming state that still allows the money processing feature to function.

2.2.3.4. *Anti-sweat and Other Electric Resistance Heaters.* Anti-sweat and other electric resistance heaters must be operational during the entirety of the test procedure. Units with a user-selectable setting must have the heaters energized and set to the most energy-consumptive position. Units featuring an automatic, non-user-adjustable controller that turns on or off based on environmental conditions must be operating in the automatic state. Units that are not shipped with a controller from the point of manufacture, but are intended to be used with a controller, must be equipped with an appropriate controller when tested.

2.2.3.5. *Condensate Pan Heaters and Pumps.* All electric resistance condensate heaters and condensate pumps must be installed and operational during the test. Prior to the start of the test, including the 24 hour period used to determine temperature stabilization, as described in ANSI/ASHRAE 32.1 section 7.2.2.2 (incorporated by reference, see §431.293), the condensate pan must be dry. For the duration of the test, including the 24 hour time period necessary for temperature stabilization, allow any condensate moisture generated to accumulate in the pan. Do not manually add or remove water from the condensate pan at any time during the test.

2.2.3.6. *Illuminated Temperature Displays.* All illuminated temperature displays must be energized and operated during the test the same way they would be energized and operated during normal field operation, as recommended in manufacturer product literature, including manuals.

2.2.3.7. *Condenser Filters.* Remove any nonpermanent filters provided to prevent particulates from blocking a model's condenser coil.

2.2.3.8. *Security Covers.* Remove any devices used to secure the model from theft or tampering.

2.2.3.9. *General Purpose Outlets.* During the test, do not connect any external load to any general purpose outlets available on a unit.

2.2.3.10. *Crankcase Heaters and Other Electric Resistance Heaters for Cold Weather.* Crankcase heaters and other electric resistance

heaters for cold weather must be operational during the test. If a control system, such as a thermostat or electronic controller, is used to modulate the operation of the heater, it must be activated during the test and operated in accordance with the manufacturer's instructions.

2.2.4. *Sampling and Recording of Data.* Record the data listed in section 7.2.2.3 of ANSI/ASHRAE 32.1 (incorporated by reference, see § 431.293) at least every 1 minute. For the purpose of this subsection, ''average beverage temperature,'' listed in section 7.2.2.3 of ANSI/ASHRAE 32.1, means ''instantaneous average next-to-vend beverage temperature.''

2.3. *Determination of Daily Energy Consumption.* Determine the daily energy consumption of each tested refrigerated bottled or canned beverage vending machine as the sum of:

(a) The default payment mechanism energy consumption value from section 2.2.3.1 of this appendix and

(b) The primary rated energy consumption per day (E_D), in kWh, and determined in accordance with the calculation procedure in section 7.2.3.1, ''Calculation of Daily Energy Consumption,'' of ANSI/ASHRAE 32.1 (incorporated by reference, see § 431.293).

2.3.1. *Calculations and Rounding.* In all cases, the primary rated energy consumption per day (E_D) must be calculated with raw measured values and rounded to units of 0.01 kWh/day.

3. *Determination of Refrigerated Volume, Vendible Capacity, and Surface Area.*

3.1. *Refrigerated Volume.* Determine the ''refrigerated volume'' of refrigerated bottled or canned beverage vending machines in accordance with appendix C, ''Measurement of Volume,'' of ANSI/ASHRAE 32.1 (incorporated by reference, see § 431.293). For combination vending machines, the ''refrigerated volume'' does not include any non-refrigerated compartments.

3.2. *Vendible Capacity.* Determine the ''vendible capacity'' of refrigerated bottled or canned beverage vending machines in accordance with the first paragraph of section 5, ''Vending Machine Capacity,'' of ANSI/ASHRAE 32.1, (incorporated by reference, see § 431.293). For combination vending machines, the ''vendible capacity'' includes only the capacity of any portion of the refrigerated bottled or canned beverage vending machine that is refrigerated and does not include the capacity of the non-refrigerated compartment(s).

[80 FR 45793, July 31, 2015]

APPENDIX B TO SUBPART Q OF PART 431—UNIFORM TEST METHOD FOR THE MEASUREMENT OF ENERGY CONSUMPTION OF REFRIGERATED BOTTLED OR CANNED BEVERAGE VENDING MACHINES

NOTE: After January 27, 2016, manufacturers must make any representations with respect to energy use or efficiency in accordance with the results of testing pursuant to appendix A of this subpart to demonstrate compliance with the energy conservation standards at 10 CFR 431.296, for which compliance was required as of August 31, 2012. Alternatively, manufacturers may make representations based on testing in accordance with this appendix prior to the compliance date of any amended energy conservation standards, provided that such representations demonstrate compliance with such amended energy conservation standards. Any representations made on or after the compliance date of any amended energy conservation standards, must be made in accordance with the results of testing pursuant to this appendix. Any representations made with respect to the energy use or efficiency of such refrigerated beverage vending machines must be in accordance with whichever version is selected.

1. *General.* Section 3, ''Definitions''; section 4, ''Instruments''; section 5, ''Vendible Capacity''; section 6, ''Test Conditions''; section 7.1, ''Test Procedures—General Requirements''; and section 7.2, ''Energy Consumption Test'' of ANSI/ASHRAE 32.1 (incorporated by reference; see § 431.293) apply to this appendix except as noted throughout this appendix. In cases where there is a conflict, the language of the test procedure in this appendix takes precedence over ANSI/ASHRAE 32.1.

1.1. *Instruments.* In addition to the instrument accuracy requirements in section 3, ''Instruments,'' of ANSI/ASHRAE 32.1 (incorporated by reference, see § 431.293), humidity shall be measured with a calibrated instrument accurate to ±2 percent RH at the specified ambient relative humidity condition specified in section 2.1.3 of this appendix.

1.2. *Definitions.* In addition to the definitions specified in section 3, ''Definitions,'' of ANSI/ASHRAE 32.1 (incorporated by reference, see § 431.293) the following definitions are also applicable to this appendix.

Accessory low power mode means a state in which a beverage vending machine's lighting and/or other energy-using systems are in low power mode, but that is not a refrigeration low power mode. Functions that may constitute an accessory low power mode may include, for example, dimming or turning off lights, but does not include adjustment of the refrigeration system to elevate the temperature of the refrigerated compartment(s).

External accessory standby mode means the mode of operation in which any external, integral customer display signs, lighting, or digital screens are connected to mains power; do not produce the intended illumination, display, or interaction functionality; and can be switched into another mode automatically with only a remote user-generated or an internal signal.

Instantaneous average next-to-vend beverage temperature means the spatial average of all standard test packages in the next-to-vend beverages positions at a given time.

Integrated average temperature means the average temperature of all standard test package measurements in the next-to-vend beverage positions taken over the duration of the test, expressed in degrees Fahrenheit (°F).

Low power mode means a state in which a beverage vending machine's lighting, refrigeration, and/or other energy-using systems are automatically adjusted (without user intervention) such that they consume less energy than they consume in an active vending environment.

Lowest application product temperature means the lowest integrated average temperature a given basic model is capable of maintaining so as to comply with the temperature stabilization requirements specified in section 7.2.2.2 of ANSI/ASHRAE 32.1 (incorporated by reference, see §431.293).

Refrigeration low power mode means a state in which a beverage vending machine's refrigeration system is in low power mode because of elevation of the temperature of the refrigerated compartment(s). To qualify as low power mode, the unit must satisfy the requirements described in section 2.3.2.1 of this appendix.

2. *Test Procedure*.

2.1. *Test Conditions*. The test conditions specified in section 6, ''Test Conditions'' of ANSI/ASHRAE 32.1 (incorporated by reference, see §431.293) apply to this appendix except that in section 6.1, ''Voltage and Frequency,'' of ANSI/ASHRAE 32.1, the voltage and frequency tolerances specified in section 6.1.a of ANSI/ASHRAE 32.1 also apply equivalently to section 6.1.b of ANSI/ASHRAE 32.1 for equipment with dual nameplate voltages.

2.1.1. *Average Beverage Temperature*. The integrated average temperature measured during the test must be within ±1 °F of the value specified in Table B.1 of this appendix or the lowest application product temperature for models tested in accordance with paragraph 2.1.3 of this appendix. The measurement of integrated average temperature must begin after temperature stabilization has been achieve and continue for the following 24 consecutive hours. All references to ''Table 1'' in ANSI/ASHRAE 32.1 (incorporated by reference, see §431.293) shall instead be interpreted as references to Table B.1 of this appendix and all references to ''average beverage temperature'' in ANSI/ASHRAE 32.1 shall instead be interpreted as references to the integrated average temperature as defined in section 1.2 of this appendix, except as noted in section 2.1.1.1 of this appendix.

2.1.1.1. *Temperature Stabilization*. Temperature stabilization shall be determined in accordance with section 7.2.2.2 of ANSI/ASHRAE 32.1 (incorporated by reference §431.293), except that the reference to ''average beverage temperature'' shall instead refer to the ''instantaneous average next-to-vend beverage temperature,'' as defined in section 1.2 of this appendix, and the reference to ''Table 1'' shall instead refer to Table A.1 of this appendix. That is, temperature stabilization is considered to be achieved 24 hours after the instantaneous average next-to-vend beverage temperature reaches the specified value (see Table A.1) and energy consumption for two successive 6 hour periods are within 2 percent of each other.

2.1.2. *Ambient Test Conditions*. The refrigerated bottled or canned beverage vending machine must be tested at the test conditions and tolerances specified in the following Table B.1 of this appendix. The specified ambient temperature and humidity conditions shall be maintained within the ranges specified for each recorded measurement. All references to ''Table 1'' in ANSI/ASHRAE 32.1 (incorporated by reference, see §431.293) shall instead be interpreted as references to Table B.1 of this appendix. In contrast to the requirements of section 6.1 and Table 1 of ANSI/ASHRAE 32.1, conduct testing only one time at the conditions referenced in Table B.1 of this appendix. Testing at alternate ambient conditions is not required or permitted.

TABLE B.1—AMBIENT TEMPERATURE AND RELATIVE HUMIDITY SPECIFIED VALUE AND TOLERANCE

Test and pretest condition	Value	Tolerance	Acceptable range (based on value and tolerance)
Instantaneous Average Next-to-Vend Temperature.	36 °F	±1 °F	35–37 °F.
Integrated Average Temperature	36 °F	±1 °F	N/A (value is averaged throughout test).
Ambient Temperature	75 °F	±2 °F	73–77 °F.
Relative Humidity	45 percent RH	±5 percent RH	40–50 percent RH.

2.1.3. *Lowest Application Product Temperature*. If a refrigerated bottled or canned beverage vending machine is not capable of maintaining an integrated average temperature of 36 °F (±1 °F) during the 24 hour test period, the unit must be tested at the lowest application product temperature, as defined in section 1.2 of this appendix. For refrigerated bottled or canned beverage vending machines equipped with a thermostat, the lowest application product temperature is the integrated average temperature achieved at the lowest thermostat setting.

2.2. *Equipment Installation and Test Set Up*. Except as provided in this section 2.2 of appendix, the test procedure for energy consumption of refrigerated bottled or canned beverage vending machines shall be conducted in accordance with the methods specified in sections 7.1 through 7.2.2.3 under ''Test Procedures'' of ANSI/ASHRAE 32.1 (incorporated by reference, see § 431.293).

2.2.1. *Equipment Loading*. Configure refrigerated bottled or canned beverage vending machines to hold the maximum number of standard products, and place standard test packages in the refrigerated compartment(s) as specified in section 2.2.1.1 or 2.2.1.2 of this appendix.

2.2.1.1. *Placement of Standard Test Packages for Equipment with Products Arranged Horizontally*. For refrigerated bottled or canned beverage vending machines with products arranged horizontally (*e.g.*, on shelves or in product spirals), place standard test packages in the refrigerated compartment(s) in the following locations, as shown in Figure B.1:

(a) For odd-number shelves, when counting starting from the bottom shelf, standard test packages shall be placed at:

(1) The left-most next-to-vend product location;

(2) The right-most next-to-vend product location; and

(3) For equipment with greater than or equal to five product locations on each shelf, either:

(i) The next-to-vend product location in the center of the shelf (*i.e.*, equidistant from the left-most and right-most next-to-vend product locations) if there are an odd number of next-to-vend products on the shelf or,

(ii) The next-to-vend product location immediately to the right and the left of the center position if there are an even number of next-to-vend products on the shelf.

(b) For even-numbered shelves, when counting from the bottom shelf, standard test packages shall be places at either:

(1) For equipment with less than or equal to six next-to-vend product locations on each shelf, the next-to-vend product location(s);

(i) One position towards the center from the left-most next-to-vend product location; and

(ii) One location towards to the center from the right-most next-to-vend product location; or

(2) For equipment with greater than six next-to-vend product locations on each shelf, the next-to-vend product locations:

(i) Two selections towards the center from the left-most next-to-vend product location; and

(ii) Two locations towards to the center from the right-most next-to-vend product location.

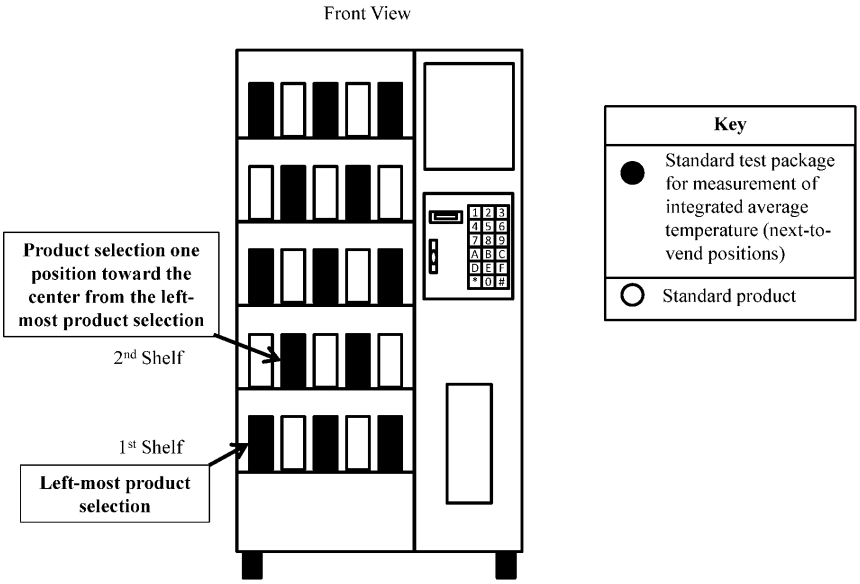

Figure B.1. Location of Standard Test Packages for Refrigerated Bottled or Canned Beverage Vending Machines with Products Arranged Horizontally and Five Next-to-Vend Product Locations on Each Shelf.

2.2.1.2. *Placement of Standard Test Packages for Equipment with Products Arranged Vertically*. For refrigerated bottled or canned beverage vending machines with products arranged vertically (*e.g.*, in stacks), place standard test packages in the refrigerated compartment(s) in each next-to-vend product location.

2.2.1.3. *Loading of Combination Vending Machines*. For combination vending machines, the non-refrigerated compartment(s) must not be loaded with any standard products, test packages, or other vendible merchandise.

2.2.1.4. *Standard Products*. The standard product shall be standard 12-ounce aluminum beverage cans filled with a liquid with a density of 1.0 grams per milliliter (g/mL) ±0.1 g/mL at 36 °F. For product storage racks that are not capable of vending 12-ounce cans, but are capable of vending 20-ounce bottles, the standard product shall be 20-ounce plastic bottles filled with a liquid with a density of 1.0 g/mL ±0.1 g/mL at 36 °F. For product storage racks that are not capable of vending 12-ounce cans or 20-ounce bottles, the standard product shall be the packaging and contents specified by the manufacturer in product literature as the standard product (*i.e.*, the specific merchandise the refrigerated bottled or canned beverage vending machine is designed to vend).

2.2.1.5. *Standard Test Packages*. A standard test package is a standard product, as specified in 2.2.1.4 of this appendix, altered to include a temperature-measuring instrument at its center of mass.

2.2.2. *Sensor Placement*. The integrated average temperature of next-to-vend beverages shall be measured in standard test packages in the next-to-vend product locations specified in section 2.2.1.1 of this appendix. Do not run the thermocouple wire and other measurement apparatus through the dispensing door; the thermocouple wire and other measurement apparatus must be configured and sealed so as to minimize air flow between the interior refrigerated volume and the ambient room air. If a manufacturer chooses to employ a method other than routing thermocouple and sensor wires through the door gasket and ensuring the gasket is compressed around the wire to ensure a good seal, then it must maintain a record of the method used in the data underlying that basic model's certification pursuant to 10 CFR 429.71.

2.2.3. *Vending Mode Test Period*. The vending mode test period begins after temperature stabilization has been achieved, as described in ANSI/ASHRAE 32.1 section 7.2.2.2 (incorporated by reference, see §431.293) and continues for 18 hours for equipment with an accessory low power mode or for 24 hours for

equipment without an accessory low power mode. For the vending mode test period, equipment that has energy-saving features that cannot be disabled shall have those features set to the most energy-consuming settings, except for as specified in section 2.2.4 of this appendix. In addition, all energy management systems shall be disabled. Instead of testing pursuant to sections 7.1.1(d) and 7.2.2.4 of ANSI/ASHRAE 32.1, provide, if necessary, any physical stimuli or other input to the machine needed to prevent automatic activation of low power modes during the vending mode test period.

2.2.4. *Accessory Low Power Mode Test Period.* For equipment with an accessory low power mode, the accessory low power mode may be engaged for 6 hours, beginning 18 hours after the temperature stabilization requirements established in section 7.2.2.2 of ANSI/ASHRAE 32.1 (incorporated by reference, see § 431.293) have been achieved, and continuing until the end of the 24-hour test period. During the accessory low power mode test, operate the refrigerated bottled or canned beverage vending machine with the lowest energy-consuming lighting and control settings that constitute an accessory low power mode. The specification and tolerances for integrated average temperature in Table B.1 of this appendix still apply, and any refrigeration low power mode must not be engaged. Instead of testing pursuant to sections 7.1.1(d) and 7.2.2.4 of ANSI/ASHRAE 32.1, provide, if necessary, any physical stimuli or other input to the machine needed to prevent automatic activation of refrigeration low power modes during the accessory low power mode test period.

2.2.5. *Accessories.* Unless specified otherwise in this appendix, all standard components that would be used during normal operation of the basic model in the field and are necessary to provide sufficient functionality for cooling and vending products in field installations (*i.e.*, product inventory, temperature management, product merchandising(including, *e.g.*, lighting or signage), product selection, and product transport and delivery) shall be in place during testing and shall be set to the maximum energy-consuming setting if manually adjustable. Components not necessary for the inventory, temperature management, product merchandising (*e.g.*, lighting or signage), product selection, or product transport and delivery shall be de-energized. If systems not required for the primary functionality of the machine as stated in this section cannot be de-energized without preventing the operation of the machine, then they shall be placed in the lowest energy consuming state Components with controls that are permanently operational and cannot be adjusted by the machine operator shall be operated in their normal setting and consistent with the requirements of 2.2.3 and 2.2.4 of this appendix. The specific components and accessories listed in the subsequent sections shall be operated as stated during the test, except when controlled as part of a low power mode during the low power mode test period.

2.2.5.1 *Payment Mechanisms.* Refrigerated bottled or canned beverage vending machines shall be tested with no payment mechanism in place, the payment mechanism in-place but de-energized, or the payment mechanism in place but set to the lowest energy consuming state, if it cannot be de-energized. A default payment mechanism energy consumption value of 0.20 kWh/day shall be added to the primary rated energy consumption per day, as noted in section 2.3 of this appendix.

2.2.5.2. *Internal Lighting.* All lighting that is contained within or is part of the internal physical boundary of the refrigerated bottled or canned beverage vending machine, as established by the top, bottom, and side panels of the equipment, shall be placed in its maximum energy consuming state.

2.2.5.3. *External Customer Display Signs, Lights, and Digital Screens.* All external customer display signs, lights, and digital screens that are independent from the refrigeration or vending performance of the refrigerated bottled or canned beverage vending machine must be disconnected, disabled, or otherwise de-energized for the duration of testing. Customer display signs, lighting, and digital screens that are integrated into the beverage vending machine cabinet or controls such that they cannot be de-energized without disabling the refrigeration or vending functions of the refrigerated bottled or canned beverage vending machine or modifying the circuitry must be placed in external accessory standby mode, if available, or their lowest energy-consuming state. Digital displays that also serve a vending or money processing function must be placed in the lowest energy-consuming state that still allows the money processing feature to function.

2.2.5.4. *Anti-sweat or Other Electric Resistance Heaters.* Anti-sweat or other electric resistance heaters must be operational during the entirety of the test procedure. Units with a user-selectable setting must have the heaters energized and set to the most energy-consumptive position. Units featuring an automatic, non-user-adjustable controller that turns on or off based on environmental conditions must be operating in the automatic state. Units that are not shipped with a controller from the point of manufacture, but are intended to be used with a controller, must be equipped with an appropriate controller when tested.

2.2.5.5. *Condensate Pan Heaters and Pumps.* All electric resistance condensate heaters and condensate pumps must be installed and operational during the test. Prior to the start of the test, including the 24 hour period

used to determine temperature stabilization prior to the start of the test period, as described in ANSI/ASHRAE 32.1 section 7.2.2.2 (incorporated by reference, see § 431.293), the condensate pan must be dry. For the duration of the test, including the 24 hour time period necessary for temperature stabilization, allow any condensate moisture generated to accumulate in the pan. Do not manually add or remove water from the condensate pan at any time during the test. Any automatic controls that initiate the operation of the condensate pan heater or pump based on water level or ambient conditions must be enabled and operated in the automatic setting.

2.2.5.6. *Illuminated Temperature Displays*. All illuminated temperature displays must be energized and operated during the test the same way they would be energized and operated during normal field operation, as recommended in manufacturer product literature, including manuals.

2.2.5.7. *Condenser Filters*. Remove any nonpermanent filters provided to prevent particulates from blocking a model's condenser coil.

2.2.5.8. *Security Covers*. Remove any devices used to secure the model from theft or tampering.

2.2.5.9. *General Purpose Outlets*. During the test, do not connect any external load to any general purpose outlets available on a unit.

2.2.5.10. *Crankcase Heaters and Other Electric Resistance Heaters for Cold Weather*. Crankcase heaters and other electric resistance heaters for cold weather must be operational during the test. If a control system, such as a thermostat or electronic controller, is used to modulate the operation of the heater, it must be activated during the test and operated in accordance with the manufacturer's instructions.

2.2.6. *Sampling and Recording of Data*. Record the data listed in section 7.2.2.3 of ANSI/ASHRAE 32.1 (incorporated by reference, see § 431.293), at least every 1 minute. For the purpose of this section, ''average beverage temperature,'' listed in section 7.2.2.3 of ANSI/ASHRAE 32.1, means ''instantaneous average next-to-vend beverage temperature.''

2.3. *Determination of Daily Energy Consumption*. In section 7.2.3.1 of ANSI/ASHRAE 32.1 (incorporated by reference, see § 431.293), the primary rated energy consumption per day (*ED*) shall be the energy measured during the vending mode test period and accessory low power mode test period, as specified in sections 2.2.3 and 2.2.4 of this appendix, as applicable.

2.3.1. *Energy Consumption of Payment Mechanisms*. Calculate the sum of:

(a) The default payment mechanism energy consumption value from section 2.2.5.1 and

(b) The primary rated energy consumption per day (E_D), in kWh, and determined in accordance with the calculation procedure in section 7.2.3.1, ''Calculation of Daily Energy Consumption,'' of ANSI/ASHRAE 32.1 (incorporated by reference, see § 431.293).

2.3.2. *Refrigeration Low Power Mode*. For refrigerated bottled or canned beverage vending machines with a refrigeration low power mode, multiply the value determined in section 2.3.1 of this appendix by 0.97 to determine the daily energy consumption of the unit tested. For refrigerated bottled or canned beverage vending machines without a refrigeration low power mode, the value determined in section 2.3.1 is the daily energy consumption of the unit tested.

2.3.2.1. *Refrigeration Low Power Mode Validation Test Method*. This test method is not required for the certification of refrigerated bottled or canned beverage vending machines. To verify the existence of a refrigeration low power mode, initiate the refrigeration low power mode in accordance with manufacturer instructions contained in product literature and manuals, after completion of the 6-hour low power mode test period. Continue recording all the data specified in section 2.2.6 of this appendix until existence of a refrigeration low power mode has been confirmed or denied. The refrigerated bottled or canned beverage vending machine shall be deemed to have a refrigeration low power mode if either:

(a) The following three requirements have been satisfied:

(1) The instantaneous average next-to-vend beverage temperature must reach at least 4 °F above the integrated average temperature or lowest application product temperature, as applicable, within 6 hours.

(2) The instantaneous average next-to-vend beverage temperature must be maintained at least 4 °F above the integrated average temperature or lowest application product temperature, as applicable, for at least 1 hour.

(3) After the instantaneous average next-to-vend beverage temperature is maintained at or above 4 °F above the integrated average temperature or lowest application product temperature, as applicable, for at least 1 hour, the refrigerated beverage vending machine must return to the specified integrated average temperature or lowest application product temperature, as applicable, automatically without direct physical intervention.

(b) Or, the compressor does not cycle on for the entire 6 hour period, in which case the instantaneous average beverage temperature does not have to reach 4 °F above the integrated average temperature or lowest application product temperature, as applicable, but, the equipment must still automatically

return to the integrated average temperature or lowest application product temperature, as applicable, after the 6 hour period without direct physical intervention.

2.3.3. *Calculations and Rounding.* In all cases, the primary rated energy consumption per day (E_D) must be calculated with raw measured values and the final result rounded to units of 0.01 kWh/day.

3. *Determination of Refrigeration Volume, Vendible Capacity, and Surface Area.*

3.1. *Refrigerated Volume.* Determine the ''refrigerated volume'' of refrigerated bottled or canned beverage vending machines in accordance with Appendix C, ''Measurement of Volume,'' of ANSI/ASHRAE 32.1 (incorporated by reference, see § 431.293). For combination vending machines, the ''refrigerated volume'' does not include any non-refrigerated compartment(s).

3.2. *Vendible Capacity.* Determine the ''vendible capacity'' of refrigerated bottled or canned beverage vending machines in accordance with the first paragraph of section 5, ''Vending Machine Capacity,'' of ANSI/ASHRAE 32.1 (incorporated by reference, see § 431.293). For combination vending machines, the ''vendible capacity'' includes only the capacity of any portion of the refrigerated bottled or canned beverage vending machine that is refrigerated and does not include the capacity of the non-refrigerated compartment(s).

3.3. *Determination of Surface Area.* Note: This section is not required for the certification of refrigerated bottled or canned beverage vending machines. Determine the surface area of each beverage vending machine as the length multiplied by the height of outermost surface of the beverage vending machine cabinet, measured from edge to edge excluding any legs or other protrusions that extend beyond the dimensions of the primary cabinet. Determine the transparent and non-transparent areas on each side of a beverage vending machine as the total surface area of material that is transparent or is not transparent, respectively.

[80 FR 45793, July 31, 2015]

Subpart R—Walk-in Coolers and Walk-in Freezers

SOURCE: 74 FR 12074, Mar. 23, 2009, unless otherwise noted.

§ 431.301 Purpose and scope.

This subpart contains energy conservation requirements for walk-in coolers and walk-in freezers, pursuant to Part C of Title III of the Energy Policy and Conservation Act, as amended, 42 U.S.C. 6311–6317.

§ 431.302 Definitions concerning walk-in coolers and walk-in freezers.

Basic model means all components of a given type of walk-in cooler or walk-in freezer (or class thereof) manufactured by one manufacturer, having the same primary energy source, and which have essentially identical electrical, physical, and functional (or hydraulic) characteristics that affect energy consumption, energy efficiency, water consumption, or water efficiency; and

(1) With respect to panels, which do not have any differing features or characteristics that affect U-factor.

(2) [Reserved]

Display door means a door that:

(1) Is designed for product display; or

(2) Has 75 percent or more of its surface area composed of glass or another transparent material.

Display panel means a panel that is entirely or partially comprised of glass, a transparent material, or both and is used for display purposes.

Door means an assembly installed in an opening on an interior or exterior wall that is used to allow access or close off the opening and that is movable in a sliding, pivoting, hinged, or revolving manner of movement. For walk-in coolers and walk-in freezers, a door includes the door panel, glass, framing materials, door plug, mullion, and any other elements that form the door or part of its connection to the wall.

Envelope means—

(1) The portion of a walk-in cooler or walk-in freezer that isolates the interior, refrigerated environment from the ambient, external environment; and

(2) All energy-consuming components of the walk-in cooler or walk-in freezer that are not part of its refrigeration system.

Freight door means a door that is not a display door and is equal to or larger than 4 feet wide and 8 feet tall.

K-factor means the thermal conductivity of a material.

Manufacturer of a walk-in cooler or walk-in freezer means any person who:

(1) Manufactures a component of a walk-in cooler or walk-in freezer that affects energy consumption, including, but not limited to, refrigeration, doors, lights, windows, or walls; or

(2) Manufactures or assembles the complete walk-in cooler or walk-in freezer.

Panel means a construction component that is not a door and is used to construct the envelope of the walk-in, i.e., elements that separate the interior refrigerated environment of the walk-in from the exterior.

Passage door means a door that is not a freight or display door.

Refrigerated means held at a temperature at or below 55 degrees Fahrenheit using a refrigeration system.

Refrigeration system means the mechanism (including all controls and other components integral to the system's operation) used to create the refrigerated environment in the interior of a walk-in cooler or freezer, consisting of:

(1) A packaged dedicated system where the unit cooler and condensing unit are integrated into a single piece of equipment; or

(2) A split dedicated system with separate unit cooler and condensing unit sections; or

(3) A unit cooler that is connected to a multiplex condensing system.

U-factor means the heat transmission in a unit time through a unit area of a specimen or product and its boundary air films, induced by a unit temperature difference between the environments on each side.

Walk-in cooler and walk-in freezer mean an enclosed storage space refrigerated to temperatures, respectively, above, and at or below 32 degrees Fahrenheit that can be walked into, and has a total chilled storage area of less than 3,000 square feet; however the terms do not include products designed and marketed exclusively for medical, scientific, or research purposes.

[74 FR 12074, Mar. 23, 2009, as amended at 76 FR 12504, Mar. 7, 2011; 76 FR 21604, Apr. 15, 2011; 76 FR 33631, June 9, 2011; 79 FR 32123, June 3, 2014]

TEST PROCEDURES

§ 431.303 Materials incorporated by reference.

(a) *General*. We incorporate by reference the following standards into subpart R of part 431. The material listed has been approved for incorporation by reference by the Director of the Federal Register in accordance with 5 U.S.C. 552(a) and 1 CFR part 51. Any subsequent amendment to a standard by the standard-setting organization will not affect the DOE regulations unless and until amended by DOE. Material is incorporated as it exists on the date of the approval and a notice of any change in the material will be published in the FEDERAL REGISTER. All approved material is available for inspection at the National Archives and Records Administration (NARA). For information on the availability of this material at NARA, call 202–741–6030 or go to *http://www.archives.gov/federal_register/code_of_federal_regulations/ibr_locations.html*. Also, this material is available for inspection at U.S. Department of Energy, Office of Energy Efficiency and Renewable Energy, Building Technologies Program, 6th Floor, 950 L'Enfant Plaza, SW., Washington, DC 20024, 202–586–2945, between 9 a.m. and 4 p.m., Monday through Friday, except Federal holidays, or go to: *http://www1.eere.energy.gov/buildings/appliance_standards/*. Standards can be obtained from the sources listed below.

(b) *AHRI*. Air-Conditioning, Heating, and Refrigeration Institute, 2111 Wilson Boulevard, Suite 500, Arlington, VA 22201, (703) 600–0366, or *http://www.ahrinet.org*.

(1) AHRI 1250 (I–P)–2009, (''AHRI 1250''), 2009 Standard for Performance Rating of Walk-In Coolers and Freezers, approved 2009, IBR approved for § 431.304.

(2) [Reserved]

(c) *ASTM*. American Society for Testing and Materials, 100 Barr Harbor Drive, West Conshohocken, PA 19428–2959, (610) 832–9500, or *http://www.astm.org*.

(1) ASTM C518–04 (''ASTM C518''), Standard Test Method for Steady-State Thermal Transmission Properties by Means of the Heat Flow Meter Apparatus, approved May 1, 2004, IBR approved for § 431.304 and appendix A to aubpart R of part 431.

(2) [Reserved]

(d) *NFRC*. National Fenestration Rating Council, 6305 Ivy Lane, Ste. 140, Greenbelt, MD 20770, (301) 589–1776, or *http://www.nfrc.org/*.

(1) NFRC 100–2010[E0A1], (''NFRC 100''), Procedure for Determining Fenestration Product U-factors, approved June 2010, IBR approved for appendix A to subpart R of part 431.

(2) [Reserved]

[74 FR 12074, Mar. 23, 2009, as amended at 76 FR 21605, Apr. 15, 2011; 76 FR 33631, June 9, 2011; 79 FR 27412, May 13, 2014]

§431.304 Uniform test method for the measurement of energy consumption of walk-in coolers and walk-in freezers.

(a) *Scope*. This section provides test procedures for measuring, pursuant to EPCA, the energy consumption of walk-in coolers and walk-in freezers.

(b) This paragraph (b) shall be used for the purposes of certifying compliance with the applicable R-value energy conservation standards for panels until compliance with amended standards is required.

(1) The R value shall be the 1/K factor multiplied by the thickness of the panel.

(2) The K factor shall be based on ASTM C518 (incorporated by reference, see §431.303).

(3) When calculating the R value for freezers, the K factor of the foam at 20 ±1 degrees Fahrenheit (average foam temperature) shall be used. Test results from a test sample 1 ±0.1-inches in thickness may be used to determine the R value of panels with various foam thickness as long as the foam is of the same final chemical form.

(4) When calculating the R value for coolers, the K factor of the foam at 55 ±1 degrees Fahrenheit (average foam temperature) shall be used. Test results from a test sample 1 ±0.1-inches in thickness may be used to determine the R value of panels with various foam thickness as long as the foam is of the same final chemical form.

(5) Foam shall be tested after it is produced in its final chemical form. (For foam produced inside of a panel (''foam-in-place''), ''final chemical form'' means the foam is cured as intended and ready for use as a finished panel. For foam produced as board stock (typically polystyrene), ''final chemical form'' means after extrusion and ready for assembly into a panel or after assembly into a panel.) Foam from foam-in-place panels must not include any structural members or non-foam materials. Foam produced as board stock may be tested prior to its incorporation into a final panel. A test sample 1 ±0.1-inches in thickness must be taken from the center of a panel and any protective skins or facers must be removed. A high-speed band-saw and a meat slicer are two types of recommended cutting tools. Hot wire cutters or other heated tools must not be used for cutting foam test samples. The two surfaces of the test sample that will contact the hot plate assemblies (as defined in ASTM C518 (incorporated by reference, see §431.303)) must both maintain ±0.03 inches flatness tolerance and also maintain parallelism with respect to one another within ±0.03 inches. Testing must be completed within 24 hours of samples being cut for testing.

(6) Internal non-foam member and/or edge regions shall not be considered in ASTM C518 testing.

(7) For panels consisting of two or more layers of dissimilar insulating materials (excluding facers or protective skins), test each material as described in paragraphs (c)(1) through (6) of this section. For a panel with *N* layers of insulating material, the overall R-Value shall be calculated as follows:

$$R_{panel} = \sum_{i=1}^{N} \frac{t_i}{k_i}$$

Where:

k_i is the k factor of the *i*th material as measured by ASTM C518,

t_i is the thickness of the *i*th material that appears in the panel, and

N is the total number of material layers that appears in the panel.

(c) This paragraph (c) shall be used for any representations of energy efficiency or energy use starting on October 12, 2011, and to certify compliance to the energy conservation standards of the R-value of panels on or after the compliance date of amended energy conservation standards for walk-in cooler and freezers.

(1) The R value shall be the 1/K factor multiplied by the thickness of the panel.

(2) The K factor shall be based on ASTM C518 (incorporated by reference; see § 431.303).

(3) For calculating the R value for freezers, the K factor of the foam at 20 ±1 degrees Fahrenheit (average foam temperature) shall be used. Test results from a test sample 1 ±0.1-inches in thickness may be used to determine the R value of panels with various foam thickness as long as the foam is of the same final chemical form.

(4) For calculating the R value for coolers, the K factor of the foam at 55 ±1 degrees Fahrenheit (average foam temperature) shall be used. Test results from a test sample 1 ±0.1-inches in thickness may be used to determine the R value of panels with various foam thickness as long as the foam is of the same final chemical form.

(5) Foam shall be tested after it is produced in its final chemical form. (For foam produced inside of a panel (''foam-in-place''), ''final chemical form'' means the foam is cured as intended and ready for use as a finished panel. For foam produced as board stock (typically polystyrene), ''final chemical form'' means after extrusion and ready for assembly into a panel or after assembly into a panel.) Foam from foam-in-place panels must not include any structural members or non-foam materials. Foam produced as board stock may be tested prior to its incorporation into a final panel. A test sample 1 ±0.1-inches in thickness must be taken from the center of a panel and any protective skins or facers must be removed. A high-speed band-saw and a meat slicer are two types of recommended cutting tools. Hot wire cutters or other heated tools must not be used for cutting foam test samples. The two surfaces of the test sample that will contact the hot plate assemblies (as defined in ASTM C518 (incorporated by reference, see § 431.303)) must both maintain ±0.03 inches flatness tolerance and also maintain parallelism with respect to one another within ±0.03 inches. Testing must be completed within 24 hours of samples being cut for testing.

(6) Internal non-foam member and/or edge regions shall not be considered in ASTM C518 testing.

(7) For panels consisting of two or more layers of dissimilar insulating materials (excluding facers or protective skins), test each material as described in paragraphs (c)(1) through (6) of this section. For a panel with *N* layers of insulating material, the overall R-Value shall be calculated as follows:

$$R_{panel} = \sum_{i=1}^{N} \frac{t_i}{k_i}$$

Where:

k_i is the k factor of the *i*th material as measured by ASTM C518, and

t_i is the thickness of the *i*th material that appears in the panel.

N is the total number of material layers that appears in the panel.

(8) Determine the U-factor, conduction load, and energy use of walk-in cooler and walk-in freezer display panels by conducting the test procedure set forth in appendix A to this subpart section 4.1.

(9) Determine the energy use of walk-in cooler and walk-in freezer display doors and non-display doors by conducting the test procedure set forth in appendix A to this subpart, sections 4.4 and 4.5, respectively.

(10) Determine the Annual Walk-in Energy Factor of walk-in cooler and walk-in freezer refrigeration systems by conducting the test procedure set forth in AHRI 1250–2009 (incorporated by reference; see §431.303), with the following modifications:

(i) In Table 2, Test Operating and Test Condition Tolerances for Steady-State Test, electrical power frequency shall have a Test Condition Tolerance of 1 percent. Also, refrigerant temperature measurements shall have a tolerance of ±0.5 F for unit cooler in/out, ±1.0 F for all other temperature measurements.

(ii) In Table 2, the Test Operating Tolerances and Test Condition Tolerances for Air Leaving Temperatures shall be deleted.

(iii) In Tables 2 through 14, The Test Condition Outdoor Wet Bulb Temperature requirement and its associated tolerance apply only to units with evaporative cooling.

(iv) In section C3.1.6, refrigerant temperature measurements upstream and downstream of the unit cooler may use sheathed sensors immersed in the flowing refrigerant instead of thermometer wells.

(v) In section C3.5, for a given motor winding configuration, the total power input shall be measured at the highest nameplate voltage. For three-phase power, voltage imbalances shall be no more than 2 percent from phase to phase.

(vi) In the test setup (section C8.3), the condenser and unit cooler shall be connected by pipes of the manufacturer-specified size. The pipe lines shall be insulated with a minimum total thermal resistance equivalent to ½″ thick insulation having a flat-surface R-Value of 3.7 ft^2- °F-hr/Btu per inch or greater. Flow meters need not be insulated but must not be in contact with the floor. The lengths of the connected liquid line and suction line shall be 25 feet, not including the requisite flow meters, each. Of this length, no more than 15 feet shall be in the conditioned space. In the case where there are multiple branches of piping, the maximum length of piping applies to each branch individually as opposed to the total length of the piping.

(vii) In section C3.4.5, for verification of sub-cooling downstream of mass flow meters, only the sight glass and a temperature sensor located on the tube surface under the insulation are required.

(viii) Delete section C3.3.6.

(ix) In section C11.1, to determine frost load defrost conditions, the Frost Load Conditions Defrost Test (C11.1.1) is optional. If the frost load test is not performed, the frost load defrost DF_f shall be equal to 1.05 multiplied by the dry coil energy consumption DF_d measured using the dry coil condition test in section C11.1 and the number of defrosts per day N_{DF} shall be set to 4.

(x) In section C11.2, if the system has an adaptive or demand defrost system, the optional test may be run as specified to establish the number of defrosts per day under dry coil conditions and this number shall be averaged with the number of defrosts per day calculated under the frost load conditions. If the system has an adaptive or demand defrost system and the optional test is not run, the number of defrosts per day N_{DF} shall be set to the average of 1 and the number of defrosts per day calculated under the frost load conditions (paragraph (c)(8)(ix) of this section).

(xi) In section C11.3, if the frost load test is not performed, the daily contribution of the load attributed to defrost Q_{DF} in Btu shall be calculated as follows:

$$Q_{DF} = 0.95 \times 3.412 \text{ Btu/W-h} \times \frac{DF_d + DF_f}{2} \times N_{DF}$$

Where:

DF_d = the defrost energy, in W-h, at the dry coil condition

DF_f = the defrost energy, in W-h, at the frosted coil condition

N_{DF} = the number of defrosts per day

(xii) In section C11, if the unit utilizes hot gas defrost, Q_{DF} and DF shall be calculated as follows:

Q_{DF} = 0.18 Btu/defrost per Btu/h capacity $\times Q_{ref} \times N_{DF}$

Where:

Q_{ref} = Gross refrigeration capacity in Btu/h as measured at the high ambient condition (90 °F for indoor systems and 95 °F for outdoor systems)

N_{DF} = Number of defrosts per day; this value shall be set to the number recommended in the installation instructions for the unit (or if no instructions, shall be set to 4) for units without adaptive defrost and 2.5 for units with adaptive defrost

For unit coolers connected to a multiplex system: The defrost energy, DF, in W-h = 0

For dedicated condensing systems or condensing units tested separately:

$DF = 0.5 \times Q_{DF}/3.412$ Btu/W-h

(xiii) Delete section C3.4.6.

(xiv) *Off-cycle evaporator fan test*. In lieu of section C10, follow the following procedures: Upon the completion of the steady state test for walk-in systems, the compressors of the walk-in systems shall be turned off. The unit cooler's fans' power consumption shall be measured in accordance with the requirements in Section C3.5. Off-cycle fan power shall be equal to on-cycle fan power unless evaporator fans are controlled by a qualifying control. Qualifying evaporator fan controls shall have a user adjustable method of destratifying air during the off-cycle including but not limited to: adjustable fan speed control or periodic ''stir cycles.'' Qualifying evaporator fan controls shall be adjusted so that the greater of a 50% duty cycle or the manufacturer default is used for measuring off-cycle fan energy. For variable speed controls, the greater of 50% fan speed or the manufacturer's default fan speed shall be used for measuring off-cycle fan energy. When a cyclic control is used at least three full ''stir cycles'' are measured.

(xv) In lieu of Table 15 and Table 16, use the following Tables:

TABLE 15—REFRIGERATOR UNIT COOLER

Test description	Unit cooler air entering dry-bulb, °F	Unit cooler air entering relative humidity, %	Saturated suction temp, °F	Liquid inlet saturation temp, °F	Liquid inlet subcooling temp, °F	Compressor capacity	Test objective
Off Cycle Fan Power.	35	<50	—	—	—	Compressor Off.	Measure fan input power during compressor off cycle.
Refrigeration Capacity Suction A.	35	<50	25	105	9	Compressor On.	Determine Net Refrigeration Capacity of Unit Cooler.
Refrigeration Capacity Suction B.	35	<50	20	105	9	Compressor On.	Determine Net Refrigeration Capacity of Unit Cooler.

Note: Superheat to be set according to equipment specification in equipment or installation manual. If no superheat specification is given, a default superheat value of 6.5 °F shall be used. The superheat setting used in the test shall be reported as part of the standard rating.

TABLE 16—FREEZER UNIT COOLER

Test Description	Unit cooler air entering dry-bulb, °F	Unit cooler air entering relative humidity, %	Saturated suction temp, °F	Liquid inlet saturation temp, °F	Liquid inlet subcooling temp, °F	Compressor capacity	Test objective
Off Cycle Fan Power.	−10	<50	—	—	—	Compressor Off.	Measure fan input power during compressor off cycle.
Refrigeration Capacity Suction A.	−10	<50	25	105	9	Compressor On.	Determine Net Refrigeration Capacity of Unit Cooler.
Refrigeration Capacity Suction B.	−10	<50	20	105	9	Compressor On.	Determine Net Refrigeration Capacity of Unit Cooler.

TABLE 16—FREEZER UNIT COOLER—Continued

Test Description	Unit cooler air entering dry-bulb, °F	Unit cooler air entering relative humidity, %	Saturated suction temp, °F	Liquid inlet saturation temp, °F	Liquid inlet subcooling temp, °F	Compressor capacity	Test objective
Defrost	−10	Various	—	—	—	Compressor Off.	Test according to Appendix C Section C11.

Note: Superheat to be set according to equipment specification in equipment or installation manual. If no superheat specification is given, a default superheat value of 6.5 °F shall be used. The superheat setting used in the test shall be reported as part of the standard rating.

(11) Determine the annual energy consumption of walk-in cooler and walk-in freezer refrigeration systems:

(i) For systems consisting of a packaged dedicated system or a split dedicated system, where the condensing unit is located outdoors, by conducting the test procedure set forth in AHRI 1250 and recording the annual energy consumption term in the equation for annual walk-in energy factor in section 7 of AHRI 1250:

$$\text{Annual Energy Consumption} = \sum_{j=1}^{n} E(t_j)$$

where t_j and n represent the outdoor temperature at each bin j and the number of hours in each bin *j*, respectively, for the temperature bins listed in Table D1 of AHRI 1250.

(ii) For systems consisting of a packaged dedicated system or a split dedicated system where the condensing unit is located in a conditioned space, by performing the following calculation:

$$\text{Annual Energy Consumption} = \left(\frac{0.33 \times \dot{BLH} + 0.67 \times \dot{BLL}}{\text{Annual Walk-in Energy Factor}}\right) \times 8760$$

where $\dot{BLH}$ and $\dot{BLL}$ for refrigerator and freezer systems are defined in sections 6.2.1 and 6.2.2, respectively, of AHRI 1250 and the annual walk-in energy factor is calculated from the results of the test procedures set forth in AHRI 1250.

(iii) For systems consisting of a single unit cooler or a set of multiple unit coolers serving a single piece of equipment and connected to a multiplex condensing system, by performing the following calculation:

$$\text{Annual Energy Consumption} = \left(\frac{0.33 \times \dot{BLH} + 0.67 \times \dot{BLL}}{\text{Annual Walk-in Energy Factor}}\right) \times 8760$$

where $\dot{BLH}$ and $\dot{BLL}$ for refrigerator and freezer systems are defined in section 7.9.2.2 and 7.9.2.3, respectively, of AHRI 1250 and the annual walk-in energy factor is calculated from the results of the test procedures set forth in AHRI 1250.

(12) *Calculation of AWEF for a walk-in cooler and freezer refrigeration system component distributed individually*. This

section only applies to fixed capacity condensing units. Multiple-capacity condensing units must be tested as part of a matched system.

(i) Calculate the AWEF for a refrigeration system containing a unit cooler that is distributed individually using the method for testing a unit cooler connected to a multiplex condensing system.

(ii) Calculate the AWEF for a refrigeration system containing a condensing unit that is distributed individually using the following nominal values:

Saturated suction temperature at the evaporator coil exit T_{evap} (°F) = 25 for coolers and −20 for freezers

For medium temperature (cooler) condensing units: On-cycle evaporator fan power $EF_{comp, on}$ (W) = 0.013 W-h/Btu × $q_{mix, cd}$ (Btu/h); where $q_{mix, cd}$ is the gross cooling capacity at the highest ambient rating condition (90 °F for indoor units and 95 °F for outdoor units)

For low temperature (freezer) condensing units: On-cycle evaporator fan power $EF_{comp, on}$ (W) = 0.016 W-h/Btu × $q_{mix, cd}$ (Btu/h); where $q_{mix, cd}$ is the gross cooling capacity at the highest ambient rating condition (90 °F for indoor units and 95 °F for outdoor units)

Off-cycle evaporator fan power $EF_{comp, off}$ (W) = 0.2 × $EF_{comp, on}$ (W)

For medium temperature (cooler) condensing units: Daily defrost energy use DF (W-h) = 0 and daily defrost heat load contribution Q_{DF} (Btu) = 0

For low temperature (freezer) condensing units without hot gas defrost capability:

Daily defrost energy use DF (W-h) = $8.5 \times 10^{-3} \times (q_{mix, cd}\ (Btu/h))^{1.27} \times N_{DF}$ for freezers

Defrost heat load contribution Q_{DF} (Btu) = 0.95 × DF (W-h)/3.412 Btu/W-h

For low temperature (freezer) condensing units with hot gas defrost capability, DF and Q_{DF} shall be calculated using the method in paragraph (c)(10)(xii) of this section.

The number of defrost cycles per day (N_{DF}) shall be set to the number recommended in the installation instructions for the unit (or if no instructions, shall be set to 2.5).

[74 FR 12074, Mar. 23, 2009, as amended at 76 FR 21605, Apr. 15, 2011; 76 FR 33631, June 9, 2011; 76 FR 65365, Oct. 21, 2011; 79 FR 27412, May 13, 2014; 79 FR 32123, June 3, 2014]

§ 431.305 [Reserved]

ENERGY CONSERVATION STANDARDS

§ 431.306 Energy conservation standards and their effective dates.

(a) Each walk-in cooler or walk-in freezer manufactured on or after January 1, 2009, shall—

(1) Have automatic door closers that firmly close all walk-in doors that have been closed to within 1 inch of full closure, except that this paragraph shall not apply to doors wider than 3 feet 9 inches or taller than 7 feet;

(2) Have strip doors, spring hinged doors, or other method of minimizing infiltration when doors are open;

(3) Contain wall, ceiling, and door insulation of at least R–25 for coolers and R–32 for freezers, except that this paragraph shall not apply to:

(i) Glazed portions of doors not to structural members and

(ii) A walk-in cooler or walk-in freezer component if the component manufacturer has demonstrated to the satisfaction of the Secretary in a manner consistent with applicable requirements that the component reduces energy consumption at least as much as if such insulation requirements of subparagraph (a)(3) were to apply.

(4) Contain floor insulation of at least R–28 for freezers;

(5) For evaporator fan motors of under 1 horsepower and less than 460 volts, use—

(i) Electronically commutated motors (brushless direct current motors); or

(ii) 3-phase motors;

(6) For condenser fan motors of under 1 horsepower, use—

(i) Electronically commutated motors (brushless direct current motors);

(ii) Permanent split capacitor-type motors; or

(iii) 3-phase motors; and

(7) For all interior lights, use light sources with an efficacy of 40 lumens per watt or more, including ballast losses (if any), except that light

sources with an efficacy of 40 lumens per watt or less, including ballast losses (if any), may be used in conjunction with a timer or device that turns off the lights within 15 minutes of when the walk-in cooler or walk-in freezer is not occupied by people.

(b) Each walk-in cooler or walk-in freezer with transparent reach-in doors manufactured on or after January 1, 2009, shall also meet the following specifications:

(1) Transparent reach-in doors for walk-in freezers and windows in walk-in freezer doors shall be of triple-pane glass with either heat-reflective treated glass or gas fill.

(2) Transparent reach-in doors for walk-in coolers and windows in walk-in cooler doors shall be—

(i) Double-pane glass with heat-reflective treated glass and gas fill; or

(ii) Triple-pane glass with either heat-reflective treated glass or gas fill.

(3) If the walk-in cooler or walk-in freezer has an antisweat heater without antisweat heat controls, the walk-in cooler and walk-in freezer shall have a total door rail, glass, and frame heater power draw of not more than 7.1 watts per square foot of door opening (for freezers) and 3.0 watts per square foot of door opening (for coolers).

(4) If the walk-in cooler or walk-in freezer has an antisweat heater with antisweat heat controls, and the total door rail, glass, and frame heater power draw is more than 7.1 watts per square foot of door opening (for freezers) and 3.0 watts per square foot of door opening (for coolers), the antisweat heat controls shall reduce the energy use of the antisweat heater in a quantity corresponding to the relative humidity in the air outside the door or to the condensation on the inner glass pane.

(c) *Walk-in cooler and freezer display doors.* All walk-in cooler and walk-in freezer display doors manufactured starting June 5, 2017, must satisfy the following standards:

Class descriptor	Class	Equations for maximum energy consumption (kWh/day)*
Display Door, Medium Temperature.	DD.M	$0.04 \times A_{dd} + 0.41$.
Display Door, Low Temperature.	DD.L	$0.15 \times A_{dd} + 0.29$.

*A_{dd} represents the surface area of the display door.

(d) *Walk-in cooler and freezer non-display doors.* All walk-in cooler and walk-in freezer non-display doors manufactured starting on June 5, 2017, must satisfy the following standards:

Class descriptor	Class	Equations for maximum energy consumption (kWh/day)*
Passage door, Medium Temperature.	PD.M	$0.05 \times A_{nd} + 1.7$.
Passage Door, Low Temperature.	PD.L	$0.14 \times A_{nd} + 4.8$.
Freight Door, Medium Temperature.	FD.M	$0.04 \times A_{nd} + 1.9$.
Freight Door, Low Temperature.	FD.L	$0.12 \times A_{nd} + 5.6$.

*A_{nd} represents the surface area of the non-display door.

(e) *Walk-in cooler and freezer refrigeration systems.* All walk-in cooler and walk-in freezer refrigeration systems manufactured starting on June 5, 2017, must satisfy the following standards:

Class descriptor	Class	Equations for minimum AWEF (Btu/W-h)
Dedicated Condensing, Medium Temperature, Indoor System, <9,000 Btu/h Capacity	DC.M.I, <9,000	5.61
Dedicated Condensing, Medium Temperature, Indoor System, ≥9,000 Btu/h Capacity	DC.M.I, ≥9,000	5.61
Dedicated Condensing, Medium Temperature, Outdoor System, <9,000 Btu/h Capacity	DC.M.O, <9,000	7.60
Dedicated Condensing, Medium Temperature, Outdoor System, ≥9,000 Btu/h Capacity	DC.M.O, ≥9,000	7.60

[74 FR 12074, Mar. 23, 2009, as amended at 78 FR 62993, Oct. 23, 2013; 79 FR 32123, June 3, 2014; 80 FR 69838, Nov. 12, 2015]

APPENDIX A TO SUBPART R OF PART 431—UNIFORM TEST METHOD FOR THE MEASUREMENT OF ENERGY CONSUMPTION OF THE COMPONENTS OF ENVELOPES OF WALK-IN COOLERS AND WALK-IN FREEZERS

1.0 Scope

This appendix covers the test requirements used to measure the energy consumption of the components that make up the envelope of a walk-in cooler or walk-in freezer.

2.0 Definitions

The definitions contained in §431.302 are applicable to this appendix.

3.0 Additional Definitions

3.1 Automatic door opener/closer means a device or control system that ''automatically'' opens and closes doors without direct user contact, such as a motion sensor that senses when a forklift is approaching the entrance to a door and opens it, and then closes the door after the forklift has passed.

3.2 Core region means the part of the panel that is not the edge region.

3.3 Edge region means a region of the panel that is wide enough to encompass any framing members and edge effects. If the panel contains framing members (e.g. a wood frame) then the width of the edge region must be as wide as any framing member plus 2 in. ±0.25 in. If the panel does not contain framing members then the width of the edge region must be 4 in ±0.25 in. For walk-in panels that utilize vacuum insulated panels (VIP) for insulation, the width of the edge region must be the lesser of 4.5 in. ±1 in. or the maximum width that does not cause the VIP to be pierced by the cutting device when the edge region is cut.

3.4 Surface area means the area of the surface of the walk-in component that would be external to the walk-in. For example, for panel, the surface area would be the area of the side of the panel that faces the outside of the walk-in. It would not include edges of the panel that are not exposed to the outside of the walk-in.

3.5 Rating conditions means, unless explicitly stated otherwise, all conditions shown in Table A.1. For installations where two or more walk-in envelope components share any surface(s), the ''external conditions'' of the shared surface(s) must reflect the internal conditions of the adjacent walk-in. For example, if a walk-in component divides a walk-in freezer from a walk-in cooler, then the internal conditions are the freezer rating conditions and the external conditions are the cooler rating conditions.

3.6 Percent time off (PTO) means the percent of time that an electrical device is assumed to be off.

TABLE A.1—TEMPERATURE CONDITIONS

Internal Temperatures (cooled space within the envelope)	
Cooler Dry Bulb Temperature	35 °F.
Freezer Dry Bulb Temperature	−10 °F.
External Temperatures (space external to the envelope)	
Freezer and Cooler Dry Bulb Temperatures	75 °F.
Subfloor Temperatures	
Freezer and Cooler Dry Bulb Temperatures	55 °F.

4.0 Calculation Instructions

4.1 Display Panels

(a) Calculate the U-factor of the display panel in accordance with section 5.3 of this appendix, Btu/h-ft^2- °F.

(b) Calculate the display panel surface area, as defined in section 3.4 of this appendix, A_{dp}, ft^2, with standard geometric formulas or engineering software.

(c) Calculate the temperature differential, ΔT_{dp}, °F, for the display panel, as follows:

$$\Delta T_{dp} = \left| T_{DB,ext,dp} - T_{DB,int,dp} \right| \qquad (4\text{-}1)$$

Where:

$T_{DB,ext,dp}$ = dry-bulb air external temperature, °F, as prescribed in Table A.1; and

$T_{DB,int,dp}$ = dry-bulb air temperature internal to the cooler or freezer, °F, as prescribed in Table A.1.

(d) Calculate the conduction load through the display panel, $Q_{cond\text{-}dp}$, Btu/h, as follows:

$$Q_{cond,dp} = A_{dp} \times \Delta T_{dp} \times U_{dp} \qquad (4\text{-}2)$$

Where:

A_{dp} = surface area of the walk-in display panel, ft^2;

ΔT_{dp} = temperature differential between refrigerated and adjacent zones, °F; and

U_{dp} = thermal transmittance, U-factor, of the display panel in accordance with section 5.3 of this appendix, Btu/h-ft^2- °F.

(e) Select Energy Efficiency Ratio (EER), as follows:

(1) For coolers, use EER = 12.4 Btu/W-h

(2) For freezers, use EER = 6.3 Btu/W-h

(f) Calculate the total daily energy consumption, E_{dp}, kWh/day, as follows:

$$E_{dp} = \frac{Q_{cond,dp}}{EER} \times \frac{24\ h \times 1\ kW}{1\ day \times 1000\ W} \qquad (4\text{-}3)$$

Where:

$Q_{cond,\ dp}$ = the conduction load through the display panel, Btu/h; and EER = EER of walk-in (cooler or freezer), Btu/W-h.

4.2 [Reserved]

4.3 [Reserved]

4.4 Display Doors

4.4.1 Conduction Through Display Doors

(a) Calculate the U-factor of the door in accordance with section 5.3 of this appendix, Btu/h-ft^2- °F

(b) Calculate the surface area, as defined in section 3.4 of this appendix, of the display door, A_{dd}, ft^2, with standard geometric formulas or engineering software.

(c) Calculate the temperature differential, ΔT_{dd}, °F, for the display door as follows:

$$\Delta T_{dd} = \left| T_{DB,ext,dd} - T_{DB,int,dd} \right| \qquad (4\text{-}18)$$

Where:

$T_{DB,ext,\ dd}$ = dry-bulb air temperature external to the display door, °F, as prescribed in Table A.1; and

$T_{DB,int,\ dd}$ = dry-bulb air temperature internal to the display door, °F, as prescribed in Table A.1.

(d) Calculate the conduction load through the display doors, $Q_{cond\text{-}dd}$, Btu/h, as follows:

$$Q_{cond,dd} = A_{dd} \times \Delta T_{dd} \times U_{dd} \qquad (4\text{-}19)$$

Where:

ΔT_{dd} = temperature differential between refrigerated and adjacent zones, °F;

A_{dd} = surface area walk-in display doors, ft^2; and

U_{dd} = thermal transmittance, U-factor of the door, in accordance with section 5.3 of this appendix, Btu/h-ft^2- °F.

4.4.2 Direct Energy Consumption of Electrical Component(s) of Display Doors

Electrical components associated with display doors could include, but are not limited to: heater wire (for anti-sweat or anti-freeze application); lights (including display door lighting systems); control system units; and sensors.

(a) Select the required value for percent time off (PTO) for each type of electricity consuming device, PTO_t (%)

(1) For lights without timers, control system or other demand-based control, PTO = 25 percent. For lighting with timers, control system or other demand-based control, PTO = 50 percent.

(2) For anti-sweat heaters on coolers (if included): Without timers, control system or other demand-based control, PTO = 0 percent. With timers, control system or other demand-based control, PTO = 75 percent. For anti-sweat heaters on freezers (if included): Without timers, control system or other auto-shut-off systems, PTO = 0 percent. With timers, control system or other demand-based control, PTO = 50 percent.

(3) For all other electricity consuming devices: Without timers, control system, or other auto-shut-off systems, PTO = 0 percent. If it can be demonstrated that the device is controlled by a preinstalled timer, control system or other auto-shut-off system, PTO = 25 percent.

(b) Calculate the power usage for each type of electricity consuming device, $P_{dd\text{-}comp,u,t}$, kWh/day, as follows:

$$P_{dd-comp,u,t} = P_{rated,u,t} \times \left(1 - PTO_{u,t}\right) \times n_{u,t} \times \frac{24h}{day} \qquad (4\text{-}20)$$

Where:

u = the index for each of type of electricity-consuming device located on either (1) the interior facing side of the display door or within the inside portion of the display door, (2) the exterior facing side of the display door, or (3) any combination of (1) and (2). For purposes of this calculation, the interior index is represented by u = int and the exterior index is represented by u = ext. If the electrical component is both on the interior and exterior side of the display door then u = int. For anti-sweat heaters sited anywhere in the display door, 75 percent of the total power is be attributed to u = int and 25 percent of the total power is attributed to u = ext;

t = index for each type of electricity consuming device with identical rated power;

$P_{rated,u,t}$ = rated power of each component, of type t, kW;

$PTO_{u,t}$ = percent time off, for device of type t, %; and

$n_{u,t}$ = number of devices at the rated power of type t, unitless.

(c) Calculate the total electrical energy consumption for interior and exterior power, $P_{dd\text{-}tot,\ int}$ (kWh/day) and $P_{dd\text{-}tot,\ ext}$ (kWh/day), respectively, as follows:

$$P_{dd-tot,int} = \sum_1^t P_{dd-comp,int,t} \qquad (4\text{-}21)$$

$$P_{dd-tot,ext} = \sum_1^t P_{dd-comp,ext,t} \qquad (4\text{-}22)$$

Where:

t = index for each type of electricity consuming device with identical rated power;

$P_{dd\text{-}comp,int,\ t}$ = the energy usage for an electricity consuming device sited on the interior facing side of or in the display door, of type t, kWh/day; and

$P_{dd\text{-}comp,ext,\ t}$ = the energy usage for an electricity consuming device sited on the external facing side of the display door, of type t, kWh/day.

(d) Calculate the total electrical energy consumption, $P_{dd\text{-}tot}$, (kWh/day), as follows:

$$P_{dd-tot} = P_{dd-tot,int} + P_{dd-tot,ext} \qquad (4\text{-}23)$$

Where:

$P_{dd\text{-}tot,int}$ = the total interior electrical energy usage for the display door, kWh/day; and

$P_{dd\text{-}tot,ext}$ = the total exterior electrical energy usage for the display door, kWh/day.

4.4.3 Total Indirect Electricity Consumption Due to Electrical Devices

(a) Select Energy Efficiency Ratio (EER), as follows:

(1) For coolers, use EER = 12.4 Btu/Wh

(2) For freezers, use EER = 6.3 Btu/Wh

(b) Calculate the additional refrigeration energy consumption due to thermal output from electrical components sited inside the display door, $C_{dd\text{-}load}$, kWh/day, as follows:

$$C_{dd-load} = P_{dd-tot,int} \times \frac{3.412}{EER} \frac{Btu}{W-h} \qquad (4\text{-}24)$$

Where:

EER = EER of walk-in cooler or walk-in freezer, Btu/W-h; and

$P_{dd-tot,int}$ = The total internal electrical energy consumption due for the display door, kWh/day.

4.4.4 Total Display Door Energy Consumption

(a) Select Energy Efficiency Ratio (EER), as follows:

(1) For coolers, use EER = 12.4 Btu/W-h

(2) For freezers, use EER = 6.3 Btu/W-h

(b) Calculate the total daily energy consumption due to conduction thermal load, $E_{dd,\ thermal}$, kWh/day, as follows:

$$E_{dd,thermal} = \frac{Q_{cond,dd}}{EER} \times \frac{24\ h \times 1\ kW}{1\ day \times 1000\ W} \qquad (4\text{-}25)$$

Where:

$Q_{cond,\ dd}$ = the conduction load through the display door, Btu/h; and

EER = EER of walk-in (cooler or freezer), Btu/W-h.

(c) Calculate the total energy, $E_{dd,tot}$, kWh/day,

$$E_{dd,tot} = E_{dd,thermal} + P_{dd-tot} + C_{dd-load} \qquad (4\text{-}26)$$

Where:

$E_{dd,\ thermal}$ = the total daily energy consumption due to thermal load for the display door, kWh/day;

P_{dd-tot} = the total electrical load, kWh/day; and

$C_{dd-load}$ = additional refrigeration load due to thermal output from electrical components contained within the display door, kWh/day.

4.5 Non-Display Doors

4.5.1 Conduction Through Non-Display Doors

(a) Calculate the surface area, as defined in section 3.4 of this appendix, of the non-display door, A_{nd}, ft^2, with standard geometric formulas or with engineering software.

(b) Calculate the temperature differential of the non-display door, ΔT_{nd}, °F, as follows:

$$\Delta T_{nd} = |T_{DB,ext,nd} - T_{DB,int,nd}| \qquad (4\text{-}27)$$

Where:

$T_{DB,ext,\ nd}$ = dry-bulb air external temperature, °F, as prescribed by Table A.1; and

$T_{DB,int,\ nd}$ = dry-bulb air internal temperature, °F, as prescribed by Table A.1. If the component spans both cooler and freezer spaces, the freezer temperature must be used.

(c) Calculate the conduction load through the non-display door: $Q_{cond-nd}$, Btu/h,

$$Q_{cond-nd} = \Delta T_{nd} \times A_{nd} \times U_{nd} \qquad (4\text{-}28)$$

Where:

ΔT_{nd} = temperature differential across the non-display door, °F;

U_{nd} = thermal transmittance, U-factor of the door, in accordance with section 5.3 of this appendix, Btu/h-ft^2- °F; and

A_{nd} = area of non-display door, ft^2.

4.5.2 Direct Energy Consumption of Electrical Components of Non-Display Doors

Electrical components associated with a walk-in non-display door comprise any components that are on the non-display door and that directly consume electrical energy. This includes, but is not limited to, heater wire (for anti-sweat or anti-freeze application), control system units, and sensors.

(a) Select the required value for percent time off for each type of electricity consuming device, PTO_t (%)

(1) For lighting without timers, control system or other demand-based control, PTO = 25 percent. For lighting with timers, control system or other demand-based control, PTO = 50 percent.

(2) For anti-sweat heaters on coolers (if included): Without timers, control system or other demand-based control, PTO = 0 percent. With timers, control system or other demand-based control, PTO = 75 percent. For anti-sweat heaters on freezers (if included): Without timers, control system or other auto-shut-off systems, PTO = 0 percent. With timers, control system or other demand-based control, PTO = 50 percent.

(3) For all other electricity consuming devices: Without timers, control system, or other auto-shut-off systems, PTO = 0 percent. If it can be demonstrated that the device is controlled by a preinstalled timer, control system or other auto-shut-off system, PTO = 25 percent.

(b) Calculate the power usage for each type of electricity consuming device, $P_{nd\text{-}comp,u,t}$, kWh/day, as follows:

$$P_{nd-comp,u,t} = P_{rated,u,t} \times \left(1 - PTO_{u,t}\right) \times n_{u,t} \times \frac{24h}{day} \qquad (4\text{-}29)$$

Where:

u = the index for each of type of electricity-consuming device located on either (1) the interior facing side of the display door or within the inside portion of the display door, (2) the exterior facing side of the display door, or (3) any combination of (1) and (2). For purposes of this calculation, the interior index is represented by u = int and the exterior index is represented by u = ext. If the electrical component is both on the interior and exterior side of the display door then u = int. For anti-sweat heaters sited anywhere in the display door, 75 percent of the total power is be attributed to u = int and 25 percent of the total power is attributed to u = ext;

t = index for each type of electricity consuming device with identical rated power;

$P_{rated,u,t}$ = rated power of each component, of type t, kW;

$PTO_{u,t}$ = percent time off, for device of type t, %; and

$n_{u,t}$ = number of devices at the rated power of type t, unitless.

(c) Calculate the total electrical energy consumption for interior and exterior power, $P_{nd\text{-}tot,\ int}$ (kWh/day) and $P_{nd\text{-}tot,\ ext}$ (kWh/day), respectively, as follows:

$$P_{nd-tot,int} = \sum_1^t P_{nd-comp,int,t} \qquad (4\text{-}30)$$

$$P_{nd-tot,ext} = \sum_1^t P_{nd-comp,ext,t} \qquad (4\text{-}31)$$

Where:

t = index for each type of electricity consuming device with identical rated power;

$P_{nd\text{-}comp,int,\ t}$ = the energy usage for an electricity consuming device sited on the internal facing side or internal to the non-display door, of type t, kWh/day; and

$P_{nd\text{-}comp,ext,\ t}$ = the energy usage for an electricity consuming device sited on the external facing side of the non-display door, of type t, kWh/day. For anti-sweat heaters,

(d) Calculate the total electrical energy consumption, $P_{nd\text{-}tot}$, kWh/day, as follows:

$$P_{nd-tot} = P_{nd-tot,int} + P_{nd-tot,ext} \qquad (4\text{-}32)$$

Where:

$P_{nd-tot,int}$ = the total interior electrical energy usage for the non-display door, of type t, kWh/day; and

$P_{nd-tot,ext}$ = the total exterior electrical energy usage for the non-display door, of type t, kWh/day.

4.5.3 Total Indirect Electricity Consumption Due to Electrical Devices

(a) Select Energy Efficiency Ratio (EER), as follows:

(1) For coolers, use EER = 12.4 Btu/Wh

(2) For freezers, use EER = 6.3 Btu/Wh

(b) Calculate the additional refrigeration energy consumption due to thermal output from electrical components associated with the non-display door, $C_{nd-load}$, kWh/day, as follows:

$$C_{nd-load} = P_{nd-tot,int} \times \frac{3.412}{EER}\frac{Btu}{W-h} \qquad (4\text{-}33)$$

Where:

EER = EER of walk-in cooler or freezer, Btu/W-h; and

$P_{nd-tot,int}$ = the total interior electrical energy consumption for the non-display door, kWh/day.

4.5.4 Total Non-Display Door Energy Consumption

(a) Select Energy Efficiency Ratio (EER), as follows:

(1) For coolers, use EER = 12.4 Btu/W-h

(2) For freezers, use EER = 6.3 Btu/W-h

(b) Calculate the total daily energy consumption due to thermal load, $E_{nd,\ thermal}$, kWh/day, as follows:

$$E_{nd,thermal} = \frac{Q_{cond-nd}}{EER} \times \frac{24\ h \times 1\ kW}{1\ day \times 1000\ W} \qquad (4\text{-}34)$$

Where:

$Q_{cond-nd}$ = the conduction load through the non-display door, Btu/hr; and

EER = EER of walk-in (cooler or freezer), Btu/W-h.

(c) Calculate the total energy, $E_{nd,tot}$, kWh/day, as follows:

$$E_{nd,tot} = E_{nd,thermal} + P_{nd-tot} + C_{load} \qquad (4\text{-}35)$$

Where:

$E_{nd,\ thermal}$ = the total daily energy consumption due to thermal load for the non-display door, kWh/day;

P_{nd-tot} = the total electrical energy consumption, kWh/day; and

$C_{nd-load}$ = additional refrigeration load due to thermal output from electrical components contained on the inside face of the non-display door, kWh/day.

5.0 Test Methods and Measurements

5.1–5.2 [Reserved]

5.3 U-factor of Doors and Display Panels

(a) Follow the procedure in NFRC 100, (incorporated by reference; see §431.303), exactly, with these exceptions:

(1) The average surface heat transfer coefficient on the cold-side of the apparatus shall be 30 Watts per square-meter-Kelvin (W/m²*K) ±5%. The average surface heat transfer coefficient on the warm-side of the apparatus shall be 7.7 Watts per square-meter-Kelvin (W/m²*K) ±5%.

(2) Cold-side conditions:

(i) Air temperature of 35 °F (1.7 °C) for cooler doors and −10 °F (−23.3 °C) for freezer doors

(ii) Mean inside radiant temperature must be the same as shown in section 5.3(a)(2)(i), above.

(3) Warm-side conditions

(i) Air temperature of 75 °F (23.9 °C)

(ii) Mean outside radiant temperature must be the same as section 5.3(a)(3)(i), above.

(4) Direct solar irradiance = 0 W/m^2 (Btu/h-ft^2).

(b) Required Test Measurements

(i) Display Doors and Display Panels

1. Thermal Transmittance: U_{dd}

(ii) Non-Display Door

1. Thermal Transmittance: U_{nd}

[76 FR 21606, Apr. 15, 2011, as amended at 76 FR 31796, June 2, 2011; 76 FR 33632, June 9, 2011; 79 FR 27414, May 13, 2014]

Subpart S—Metal Halide Lamp Ballasts and Fixtures

SOURCE: 74 FR 12075, Mar. 23, 2009, unless otherwise noted.

§ 431.321 Purpose and scope.

This subpart contains energy conservation requirements for metal halide lamp ballasts and fixtures, pursuant to Part A of Title III of the Energy Policy and Conservation Act, as amended, 42 U.S.C. 6291–6309.

[75 FR 10966, Mar. 9, 2010]

§ 431.322 Definitions concerning metal halide lamp ballasts and fixtures.

AC control signal means an alternating current (AC) signal that is supplied to the ballast using additional wiring for the purpose of controlling the ballast and putting the ballast in standby mode.

Active mode means the condition in which an energy-using product:

(1) Is connected to a main power source;

(2) Has been activated; and

(3) Provides one or more main functions.

Ballast means a device used with an electric discharge lamp to obtain necessary circuit conditions (voltage, current, and waveform) for starting and operating.

Ballast efficiency means, in the case of a high intensity discharge fixture, the efficiency of a lamp and ballast combination, expressed as a percentage, and calculated in accordance with the following formula: Efficiency = P_{out}/P_{in} where:

(1) P_{out} equals the measured operating lamp wattage;

(2) P_{in} equals the measured operating input wattage;

(3) The lamp, and the capacitor when the capacitor is provided, shall constitute a nominal system in accordance with the ANSI C78.43, (incorporated by reference; see § 431.323);

(4) For ballasts with a frequency of 60 Hz, P_{in} and P_{out} shall be measured after lamps have been stabilized according to section 4.4 of ANSI C82.6 (incorporated by reference; see § 431.323) using a wattmeter with accuracy specified in section 4.5 of ANSI C82.6; and

(5) For ballasts with a frequency greater than 60 Hz, P_{in} and P_{out} shall have a basic accuracy of ±0.5 percent at the higher of either 3 times the output operating frequency of the ballast or 2.4 kHz.

Basic model means all units of a given type of covered product (or class thereof) manufactured by one manufacturer, having the same primary energy source, and which have essentially identical electrical, physical, and functional (or hydraulic) characteristics that affect energy consumption, energy efficiency, water consumption, or water efficiency, and are rated to operate a given lamp type and wattage.

DC control signal means a direct current (DC) signal that is supplied to the ballast using additional wiring for the purpose of controlling the ballast and putting the ballast in standby mode.

Electronic ballast means a device that uses semiconductors as the primary means to control lamp starting and operation.

General lighting application means lighting that provides an interior or exterior area with overall illumination.

High-frequency electronic metal halide ballast means an electronic ballast that operates a lamp at an output frequency of 1000 Hz or greater.

Metal halide ballast means a ballast used to start and operate metal halide lamps.

Metal halide lamp means a high intensity discharge lamp in which the major

portion of the light is produced by radiation of metal halides and their products of dissociation, possibly in combination with metallic vapors.

Metal halide lamp fixture means a light fixture for general lighting application designed to be operated with a metal halide lamp and a ballast for a metal halide lamp.

Nonpulse-start electronic ballast means an electronic ballast with a starting method other than pulse-start.

Off mode means the condition in which an energy-using product:

(1) Is connected to a main power source; and

(2) Is not providing any standby or active mode function.

PLC control signal means a power line carrier (PLC) signal that is supplied to the ballast using the input ballast wiring for the purpose of controlling the ballast and putting the ballast in standby mode.

Probe-start metal halide ballast means a ballast that starts a probe-start metal halide lamp that contains a third starting electrode (probe) in the arc tube, and does not generally contain an igniter but instead starts lamps with high ballast open circuit voltage.

Pulse-start metal halide ballast means an electronic or electromagnetic ballast that starts a pulse-start metal halide lamp with high voltage pulses, where lamps shall be started by the ballast first providing a high voltage pulse for ionization of the gas to produce a glow discharge and then power to sustain the discharge through the glow-to-arc transition.

Standby mode means the condition in which an energy-using product:

(1) Is connected to a main power source; and

(2) Offers one or more of the following user-oriented or protective functions:

(i) To facilitate the activation or deactivation of other functions (including active mode) by remote switch (including remote control), internal sensor, or timer;

(ii) Continuous functions, including information or status displays (including clocks) or sensor-based functions.

Wireless control signal means a wireless signal that is radiated to and received by the ballast for the purpose of controlling the ballast and putting the ballast in standby mode.

[74 FR 12075, Mar. 23, 2009, as amended at 75 FR 10966, Mar. 9, 2010; 74 FR 12074, Mar. 23, 2009; 79 FR 7843, Feb. 10, 2014]

TEST PROCEDURES

§ 431.323 Materials incorporated by reference.

(a) *General.* We incorporate by reference the following standards into subpart S of part 431. The material listed has been approved for incorporation by reference by the Director of the Federal Register in accordance with 5 U.S.C. 552(a) and 1 CFR part 51. Any subsequent amendment to a standard by the standard-setting organization will not affect the DOE regulations unless and until amended by DOE. Material is incorporated as it exists on the date of the approval and a notice of any change in the material will be published in the FEDERAL REGISTER. All approved material is available for inspection at the National Archives and Records Administration (NARA). For information on the availability of this material at NARA, call 202–741–6030 or go to *http://www.archives.gov/federal_register/code_of_federal_regulations/ibr_locations.html.* Also, this material is available for inspection at U.S. Department of Energy, Office of Energy Efficiency and Renewable Energy, Building Technologies Program, 6th Floor, 950 L'Enfant Plaza, SW., Washington, DC 20024, 202–586–2945, between 9 a.m. and 4 p.m., Monday through Friday, except Federal holidays, or go to: *http://www1.eere.energy.gov/buildings/appliance_standards/.* Standards can be obtained from the sources listed below.

(b) *ANSI.* American National Standards Institute, 25 W. 43rd Street, 4th Floor, New York, NY 10036, 212–642–4900, or go to *http://www.ansi.org.*

(1) ANSI C78.43–2004, Revision and consolidation of ANSI C78.1372–1997, .1374–1997, .1375–1997, .1376–1997, .1377–1997, .1378–1997, .1379–1997, .1382–1997, .1384–1997, and .1650–2003 (''ANSI C78.43''), American National Standard for electric lamps: Single-Ended Metal Halide Lamps, approved May 5, 2004, IBR approved for § 431.322;

(2) ANSI C82.6–2005, Proposed Revision of ANSI C82.6–1985 (''ANSI C82.6''), American National Standard for Lamp Ballasts—Ballasts for High-Intensity Discharge Lamps—Methods of Measurement, approved February 14, 2005, IBR approved for § 431.322; and § 431.324.

(c) *NFPA*. National Fire Protection Association, 11 Tracy Drive, Avon, MA 02322, 1–800–344–3555, or go to *http://www.nfpa.org;*

(1) NFPA 70–2002 (''NFPA 70''), National Electrical Code 2002 Edition, IBR approved for § 431.326;

(2) [Reserved]

(e) UL. Underwriters Laboratories, Inc., COMM 2000, 1414 Brook Drive, Downers Grove, IL 60515, 1–888–853–3503, or go to *http://www.ul.com.*

(1) UL 1029 (ANSI/UL 1029–2007) (''UL 1029''), Standard for Safety High-Intensity-Discharge Lamp Ballasts, 5th edition, May 25, 1994, which consists of pages dated May 25, 1994, September 28, 1995, August 3, 1998, February 7, 2001 and December 11, 2007, IBR approved for § 431.326.

(2) [Reserved]

[74 FR 12075, Mar. 23, 2009, as amended at 75 FR 10966, Mar. 9, 2010]

§ 431.324 Uniform test method for the measurement of energy efficiency and standby mode energy consumption of metal halide lamp ballasts.

(a) *Scope*. This section provides test procedures for measuring, pursuant to EPCA, the energy efficiency of metal halide ballasts.

(b) *Testing and Calculations Active Mode*. (1)(i) *Test Conditions*. The power supply, ballast test conditions, lamp position, lamp stabilization, and test instrumentation shall all conform to the requirements specified in section 4.0, ''General Conditions for Electrical Performance Tests,'' of ANSI C82.6 (incorporated by reference; see § 431.323). Ambient temperatures for the testing period shall be maintained at 25 °C ±5 °C. Airflow in the room for the testing period shall be ≤0.5 meters/second. The ballast shall be operated until equilibrium. Lamps used in the test shall conform to the general requirements in section 4.4.1 of ANSI C82.6 and be seasoned for a minimum of 100 hour prior to use in ballast tests. Basic lamp stabilization shall conform to the general requirements in section 4.4.2 of ANSI C82.6, and stabilization shall be reached when the lamp's electrical characteristics vary by no more than 3-percent in three consecutive 10- to 15-minute intervals measured after the minimum burning time of 30 minutes. After the stabilization process has begun, the lamp shall not be moved or repositioned until after the testing is complete. In order to avoid heating up the test ballast during lamp stabilization, which could cause resistance changes and result in unrepeatable data, it is necessary to warm up the lamp on a standby ballast. This standby ballast should be a commercial ballast of a type similar to the test ballast in order to be able to switch a stabilized lamp to the test ballast without extinguishing the lamp. Fast-acting or make-before-break switches are recommended to prevent the lamps from extinguishing during switchover.

(ii) Alternative Stabilization Method. In cases where switching without extinguishing the lamp is impossible or for low-frequency electronic ballasts, the following alternative stabilization method shall be used. The lamp characteristics are determined using a reference ballast and recorded for future comparison. The same lamp is to be driven by the ballast under test until the ballast reaches operational stability. Operational stability is defined by three consecutive measurements, 5 minutes apart, of the lamp power where the three readings are within 2.5 percent. The electrical measurements are to be taken within 5 minutes after conclusion of the stabilization period.

(iii) *Input Voltage for Tests*. For ballasts designed to operate lamps rated less than 150 W that have 120 V as an available input voltage, testing shall be performed at 120 V. For ballasts designed to operate lamps rated less than 150 W that do not have 120 V as an available voltage, testing shall be performed at the highest available input voltage. For ballasts designed to operate lamps rated greater than or equal to 150 W that have 277 V as an available input voltage, testing shall be conducted at 277 V. For ballasts designed to operate lamps rated greater than or equal to 150 W that do not have 277 V as an available input voltage, testing

shall be conducted at the highest available input voltage.

(2) *Test Measurement*. The ballast input power and lamp output power during operating conditions shall be measured in accordance with the methods specified in section 6.0, ''Ballast Measurements (Multiple-Supply Type Ballasts)'' of the ANSI C82.6 (incorporated by reference; *see* § 431.323).

(3) *Efficiency Calculation*. The measured lamp output power shall be divided by the measured ballast input power to determine the percent efficiency of the ballast under test to three significant figures.

(i) A fractional number at or above the midpoint between two consecutive decimal places shall be rounded up to the higher of the two decimal places; or

(ii) A fractional number below the midpoint between two consecutive decimal places shall be rounded down to the lower of the two decimal places.

(c) *Testing and Calculations-Standby Mode*. The measurement of standby mode need not be performed to determine compliance with energy conservation standards for metal halide lamp fixtures at this time. The above statement will be removed as part of the rulemaking to amend the energy conservation standards for metal halide lamp fixtures to account for standby mode energy consumption, and the following shall apply on the compliance date for such requirements. However, all representations related to standby mode energy consumption of these products made after September 7, 2010, must be based upon results generated under this test procedure.

(1) *Test Conditions*. (i) The power supply and ballast test conditions with the exception of input voltage shall all conform to the requirements specified in section 4.0, ''General Conditions for Electrical Performance Tests,'' of the ANSI C82.6 (incorporated by reference; see § 431.323). Ambient temperatures for the testing period shall be maintained at 25 °C ±5 °C. Send a signal to the ballast instructing it to have zero light output using the appropriate ballast communication protocol or system for the ballast being tested.

(ii) *Input Voltage for Tests*. For ballasts designed to operate lamps rated less than 150 W that have 120 V as an available input voltage, ballasts are to be tested at 120 V. For ballasts designed to operate lamps rated less than 150 W that do not have 120 V as an available voltage, ballasts are to be tested at the highest available input voltage. For ballasts designed to operate lamps rated greater than or equal to 150 W that have 277 V as an available input voltage, ballasts are to be tested at 277 V. For ballasts designed to operate lamps rated greater than or equal to 150 W that do not have 277 V as an available input voltage, ballasts are to be tested at the highest available input voltage.

(2) *Measurement of Main Input Power*. Measure the input power (watts) to the ballast in accordance with the methods specified in section 6.0, ''Ballast Measurements (Multiple-Supply Type Ballasts)'' of the ANSI C82.6 (incorporated by reference; see § 431.323).

(3) *Measurement of Control Signal Power*. The power from the control signal path is measured using all applicable methods described below:

(i) *DC Control Signal*. Measure the DC control signal voltage, using a voltmeter (V), and current, using an ammeter (A) connected to the ballast in accordance with the circuit shown in Figure 1. The DC control signal power is calculated by multiplying the DC control signal voltage by the DC control signal current.

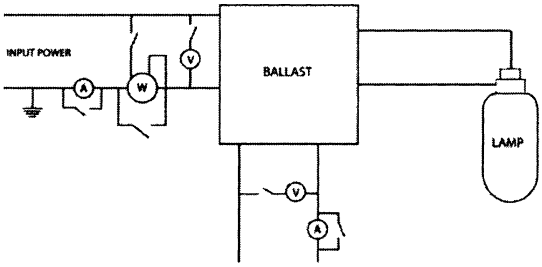

Figure 1. Circuit for Measuring DC Control Signal Power in Standby Mode

(ii) *AC Control Signal.* Measure the AC control signal power (watts), using a wattmeter capable of indicating true RMS power in watts (W), connected to the ballast in accordance with the circuit shown in Figure 2.

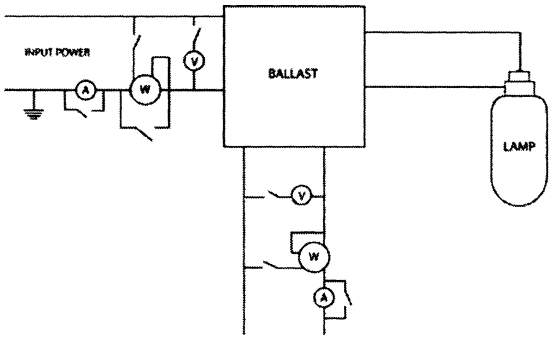

Figure 2. Circuit for Measuring AC Control Signal Power in Standby Mode

(iii) *Power Line Carrier (PLC) Control Signal.* Measure the PLC control signal power (watts), using a wattmeter capable of indicating true RMS power in watts (W) connected to the ballast in accordance with the circuit shown in Figure 3. The wattmeter must have a frequency response that is at least 10 times higher than the PLC being measured to measure the PLC signal correctly. The wattmeter must also be high-pass filtered to filter out power at 60 Hz.

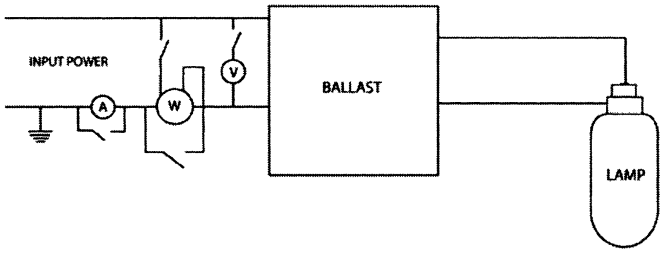

Figure 3. Circuit for Measuring PLC Control Signal Power in Standby Mode

[74 FR 12075, Mar. 23, 2009, as amended at 75 FR 10966, Mar. 9, 2010; 79 FR 7843, Feb. 10, 2014]

ENERGY CONSERVATION STANDARDS

§431.326 Energy conservation standards and their effective dates.

(a) Except as provided in paragraph (b) of this section, each metal halide lamp fixture manufactured on or after January 1, 2009, and designed to be operated with lamps rated greater than or equal to 150 watts but less than or equal to 500 watts shall contain—

(1) A pulse-start metal halide ballast with a minimum ballast efficiency of 88 percent;

(2) A magnetic probe-start ballast with a minimum ballast efficiency of 94 percent; or

(3) A nonpulse-start electronic ballast with either a minimum ballast efficiency of 92 percent for wattages greater than 250 watts; or a minimum ballast efficiency of 90 percent for wattages less than or equal to 250 watts.

(b) The standards described in paragraph (a) of this section do not apply to—

(1) Metal halide lamp fixtures with regulated lag ballasts;

(2) Metal halide lamp fixtures that use electronic ballasts that operate at 480 volts; or

(3) Metal halide lamp fixtures that;

(i) Are rated only for 150 watt lamps;

(ii) Are rated for use in wet locations; as specified by the National Fire Protection Association in NFPA 70 (incorporated by reference; *see* §431.323); and

(iii) Contain a ballast that is rated to operate at ambient air temperatures above 50 °C, as specified in UL 1029, (incorporated by reference; *see* §431.323).

(c) Except when the requirements of paragraph (a) of this section are more stringent (*i.e.*, require a larger minimum efficiency value) or as provided by paragraph (e) of this section, each metal halide lamp fixture manufactured on or after February 10, 2017, must contain a metal halide ballast with an efficiency not less than the value determined from the appropriate equation in the following table:

Designed to be operated with lamps of the following rated lamp wattage	Tested input voltage‡‡	Minimum standard equation‡‡ %
≥50 W and ≤100 W	Tested at 480 V	(1/(1 + 1.24 × P^(−0.351))) − 0.020††
≥50 W and ≤100 W	All others	1/(1 + 1.24 × P^(−0.351))
>100 W and <150† W	Tested at 480 V	(1/(1 + 1.24 × P^(−0.351))) − 0.020
>100 W and <150† W	All others	1/(1 + 1.24 × P^(−0.351))
≥150‡ W and ≤250 W	Tested at 480 V	0.880
≥150‡ W and ≤250 W	All others	For ≥150 W and ≤200 W: 0.880 For >200 W and ≤250 W: 1/(1 + 0.876 × P^(−0.351))
>250 W and ≤500 W	Tested at 480 V	For >250 and <265 W: 0.880 For ≥265 W and ≤500 W: (1/(1 + 0.876 × P^(−0.351)) − 0.010
>250 W and ≤500 W	All others	1/(1 + 0.876 × P^(−0.351))
>500 W and ≤1000 W	Tested at 480 V	For >500 W and ≤750 W: 0.900 For >750 W and ≤1000 W: 0.000104 × P + 0.822 For >500 W and ≤1000 W: may not utilize a probe-start ballast
>500 W and ≤1000 W	All others	For >500 W and ≤750 W: 0.910 For >750 W and ≤1000 W: 0.000104 × P + 0.832

Designed to be operated with lamps of the following rated lamp wattage	Tested input voltage‡‡	Minimum standard equation‡‡ %
		For >500 W and ≤1000 W: may not utilize a probe-start ballast

† Includes 150 W fixtures specified in paragraph (b)(3) of this section, that are fixtures rated only for 150 W lamps; rated for use in wet locations, as specified by the NFPA 70 (incorporated by reference, see § 431.323), section 410.4(A); and containing a ballast that is rated to operate at ambient air temperatures above 50 °C, as specified by UL 1029 (incorporated by reference, see § 431.323).

‡ Excludes 150 W fixtures specified in paragraph (b)(3) of this section, that are fixtures rated only for 150 W lamps; rated for use in wet locations, as specified by the NFPA 70, section 410.4(A); and containing a ballast that is rated to operate at ambient air temperatures above 50 °C, as specified by UL 1029.

†† P is defined as the rated wattage of the lamp the fixture is designed to operate.

‡‡ Tested input voltage is specified in 10 CFR 431.324.

(d) Except as provided in paragraph (e) of this section, metal halide lamp fixtures manufactured on or after February 10, 2017, that operate lamps with rated wattage >500 W to ≤1000 W must not contain a probe-start metal halide ballast.

(e) The standards described in paragraphs (c) and (d) of this section do not apply to—

(1) Metal halide lamp fixtures with regulated-lag ballasts;

(2) Metal halide lamp fixtures that use electronic ballasts that operate at 480 volts; and

(3) Metal halide lamp fixtures that use high-frequency electronic ballasts.

[74 FR 12075, Mar. 23, 2009, as amended at 79 FR 7844, Feb. 10, 2014]

Subpart T [Reserved]

Subpart U—Enforcement for Electric Motors

SOURCE: 69 FR 61941, Oct. 21, 2004, unless otherwise noted. Redesignated at 70 FR 60416, Oct. 18, 2005.

§ 431.381 Purpose and scope for electric motors.

This subpart describes violations of EPCA's energy conservation requirements, specific procedures we will follow in pursuing alleged non-compliance of an electric motor with an applicable energy conservation standard or labeling requirement, and general procedures for enforcement action, largely drawn directly from EPCA, that apply to electric motors.

[76 FR 12505, Mar. 7, 2011]

§ 431.382 Prohibited acts.

(a) Each of the following is a prohibited act under sections 332 and 345 of the Act:

(1) Distribution in commerce by a manufacturer or private labeler of any ''new covered equipment'' which is not labeled in accordance with an applicable labeling rule prescribed in accordance with Section 344 of the Act, and in this part;

(2) Removal from any ''new covered equipment'' or rendering illegible, by a manufacturer, distributor, retailer, or private labeler, of any label required under this part to be provided with such covered equipment;

(3) Failure to permit access to, or copying of records required to be supplied under the Act and this part, or failure to make reports or provide other information required to be supplied under the Act and this part;

(4) Advertisement of an electric motor or motors, by a manufacturer, distributor, retailer, or private labeler, in a catalog from which the equipment may be purchased, without including in the catalog all information as required by § 431.31(b)(1), provided, however, that this shall not apply to an advertisement of an electric motor in a catalog if distribution of the catalog began before the effective date of the labeling rule applicable to that motor;

(5) Failure of a manufacturer to supply at his expense a reasonable number of units of covered equipment to a test laboratory designated by the Secretary;

(6) Failure of a manufacturer to permit a representative designated by the Secretary to observe any testing required by the Act and this part, and to inspect the results of such testing; and

(7) Distribution in commerce by a manufacturer or private labeler of any new covered equipment which is not in compliance with an applicable energy efficiency standard prescribed under the Act and this part.

(b) In accordance with sections 333 and 345 of the Act, any person who knowingly violates any provision of paragraph (a) of this section may be subject to assessment of a civil penalty of no more than $200 for each violation.

(c) For purposes of this section:

(1) The term ''new covered equipment'' means covered equipment the title of which has not passed to a purchaser who buys such product for purposes other than:

(i) Reselling it; or

(ii) Leasing it for a period in excess of one year; and

(2) The term ''knowingly'' means:

(i) Having actual knowledge; or

(ii) Presumed to have knowledge deemed to be possessed by a reasonable person who acts in the circumstances, including knowledge obtainable upon the exercise of due care.

[69 FR 61941, Oct. 21, 2004. Redesignated at 70 FR 60416, Oct. 18, 2005, as amended at 79 FR 19, Jan. 2, 2014]

§ 431.383 Enforcement process for electric motors.

(a) *Test notice*. Upon receiving information in writing, concerning the energy performance of a particular electric motor sold by a particular manufacturer or private labeler, which indicates that the electric motor may not be in compliance with the applicable energy efficiency standard, or upon undertaking to ascertain the accuracy of the efficiency rating on the nameplate or in marketing materials for an electric motor, disclosed pursuant to subpart B of this part, the Secretary may conduct testing of that electric motor under this subpart by means of a test notice addressed to the manufacturer in accordance with the following requirements:

(1) The test notice procedure will only be followed after the Secretary or his/her designated representative has examined the underlying test data (or, where appropriate, data as to use of an alternative efficiency determination method) provided by the manufacturer and after the manufacturer has been offered the opportunity to meet with the Department to verify, as applicable, compliance with the applicable efficiency standard, or the accuracy of labeling information, or both. In addition, where compliance of a basic model was certified based on an AEDM, the Department shall have the discretion to pursue the provisions of § 431.17(a)(4)(iii) prior to invoking the test notice procedure. A representative designated by the Secretary shall be permitted to observe any reverification procedures undertaken pursuant to this subpart, and to inspect the results of such reverification.

(2) The test notice will be signed by the Secretary or his/her designee. The test notice will be mailed or delivered by the Department to the plant manager or other responsible official, as designated by the manufacturer.

(3) The test notice will specify the model or basic model to be selected for testing, the method of selecting the test sample, the date and time at which testing shall be initiated, the date by which testing is scheduled to be completed and the facility at which testing will be conducted. The test notice may also provide for situations in which the specified basic model is unavailable for testing, and may include alternative basic models.

(4) The Secretary may require in the test notice that the manufacturer of an electric motor shall ship at his expense a reasonable number of units of a basic model specified in such test notice to a testing laboratory designated by the Secretary. The number of units of a basic model specified in a test notice shall not exceed 20.

(5) Within five working days of the time the units are selected, the manufacturer shall ship the specified test units of a basic model to the testing laboratory.

(b) *Testing laboratory*. Whenever the Department conducts enforcement testing at a designated laboratory in accordance with a test notice under this section, the resulting test data shall constitute official test data for that basic model. Such test data will be used by the Department to make a determination of compliance or noncompliance if a sufficient number of

tests have been conducted to satisfy the requirements of appendix A of this subpart.

(c) *Sampling*. The determination that a manufacturer's basic model complies with its labeled efficiency, or the applicable energy efficiency standard, shall be based on the testing conducted in accordance with the statistical sampling procedures set forth in appendix A of this subpart and the test procedures set forth in appendix B to subpart B of this part.

(d) *Test unit selection*. A Department inspector shall select a batch, a batch sample, and test units from the batch sample in accordance with the provisions of this paragraph and the conditions specified in the test notice.

(1) The batch may be subdivided by the Department utilizing criteria specified in the test notice.

(2) A batch sample of up to 20 units will then be randomly selected from one or more subdivided groups within the batch. The manufacturer shall keep on hand all units in the batch sample until such time as the basic model is determined to be in compliance or noncompliance.

(3) Individual test units comprising the test sample shall be randomly selected from the batch sample.

(4) All random selection shall be achieved by sequentially numbering all of the units in a batch sample and then using a table of random numbers to select the units to be tested.

(e) *Test unit preparation*. (1) Prior to and during the testing, a test unit selected in accordance with paragraph (d) of this section shall not be prepared, modified, or adjusted in any manner unless such preparation, modification, or adjustment is allowed by the applicable Department of Energy test procedure. One test shall be conducted for each test unit in accordance with the applicable test procedures prescribed in appendix B to subpart B of this part.

(2) No quality control, testing, or assembly procedures shall be performed on a test unit, or any parts and sub-assemblies thereof, that is not performed during the production and assembly of all other units included in the basic model.

(3) A test unit shall be considered defective if such unit is inoperative or is found to be in noncompliance due to failure of the unit to operate according to the manufacturer's design and operating instructions. Defective units, including those damaged due to shipping or handling, shall be reported immediately to the Department. The Department shall authorize testing of an additional unit on a case-by-case basis.

(4)(i) *Non-standard endshields or flanges*. For purposes of DOE-initiated testing of electric motors with non-standard endshields or flanges, the Department will have the discretion to determine whether the lab should test a general purpose electric motor of equivalent electrical design and enclosure rather than replacing the non-standard flange or endshield.

(ii) *Partial electric motors*. For purposes of DOE-initiated testing, the Department has the discretion to determine whether the lab should test a general purpose electric motor of equivalent electrical design and enclosure rather than machining and attaching an endshield.

(f) *Testing at manufacturer's option*. (1) If a manufacturer's basic model is determined to be in noncompliance with the applicable energy performance standard at the conclusion of Department testing in accordance with the sampling plan specified in appendix A of this subpart, the manufacturer may request that the Department conduct additional testing of the basic model according to procedures set forth in appendix A of this subpart.

(2) All units tested under this paragraph shall be selected and tested in accordance with the provisions given in paragraphs (a) through (e) of this section.

(3) The manufacturer shall bear the cost of all testing conducted under this paragraph.

(4) The manufacturer shall cease distribution of the basic model tested under the provisions of this paragraph from the time the manufacturer elects to exercise the option provided in this paragraph until the basic model is determined to be in compliance. The Department may seek civil penalties for all units distributed during such period.

(5) If the additional testing results in a determination of compliance, a notice of allowance to resume distribution shall be issued by the Department.

[69 FR 61941, Oct. 21, 2004. Redesignated at 70 FR 60416, Oct. 18, 2005, as amended at 78 FR 75995, Dec. 13, 2013]

§ 431.384 [Reserved]

§ 431.385 Cessation of distribution of a basic model of an electric motor.

(a) In the event that a model of an electric motor is determined non-compliant by the Department in accordance with § 431.192 or if a manufacturer or private labeler determines a model of an electric motor to be in noncompliance, then the manufacturer or private labeler shall:

(1) Immediately cease distribution in commerce of the basic model.

(2) Give immediate written notification of the determination of noncompliance, to all persons to whom the manufacturer has distributed units of the basic model manufactured since the date of the last determination of compliance.

(3) Pursuant to a request made by the Secretary, provide the Department within 30 days of the request, records, reports, and other documentation pertaining to the acquisition, ordering, storage, shipment, or sale of a basic model determined to be in noncompliance.

(4) The manufacturer may modify the non-compliant basic model in such manner as to make it comply with the applicable performance standard. Such modified basic model shall then be treated as a new basic model and must be certified in accordance with the provisions of this subpart; except that in addition to satisfying all requirements of this subpart, the manufacturer shall also maintain records that demonstrate that modifications have been made to all units of the new basic model prior to distribution in commerce.

(b) If a basic model is not properly certified in accordance with the requirements of this subpart, the Secretary may seek, among other remedies, injunctive action to prohibit distribution in commerce of such basic model.

§ 431.386 Remedies.

If the Secretary determines that a basic model of any covered equipment does not comply with an applicable energy conservation standard:

(a) The Secretary will notify the manufacturer, private labeler, or any other person as required, of this finding and of the Secretary's intent to seek a judicial order restraining further distribution in commerce of units of such a basic model unless the manufacturer, private labeler or other person as required, delivers, within 15 calendar days, a satisfactory statement to the Secretary, of the steps the manufacturer, private labeler or other person will take to insure that the noncompliant basic model will no longer be distributed in commerce. The Secretary will monitor the implementation of such statement.

(b) If the manufacturer, private labeler or any other person as required, fails to stop distribution of the noncompliant basic model, the Secretary may seek to restrain such violation in accordance with sections 334 and 345 of the Act.

(c) The Secretary will determine whether the facts of the case warrant the assessment of civil penalties for knowing violations in accordance with sections 333 and 345 of the Act.

§ 431.387 Hearings and appeals.

(a) Under sections 333(d) and 345 of the Act, before issuing an order assessing a civil penalty against any person, the Secretary must provide to such a person a notice of the proposed penalty. Such notice must inform the person that such person can choose (in writing within 30 days after receipt of the notice) to have the procedures of paragraph (c) of this section (in lieu of those in paragraph (b) of this section) apply with respect to such assessment.

(b)(1) Unless a person elects, within 30 calendar days after receipt of a notice under paragraph (a) of this section, to have paragraph (c) of this section apply with respect to the civil penalty under paragraph (a), the Secretary will assess the penalty, by order, after providing an opportunity for an agency hearing under 5 U.S.C. 554, before an administrative law judge appointed

under 5 U.S.C. 3105, and making a determination of violation on the record. Such assessment order will include the administrative law judge's findings and the basis for such assessment.

(2) Any person against whom the Secretary assesses a penalty under this paragraph may, within 60 calendar days after the date of the order assessing such penalty, initiate action in the United States Court of Appeals for the appropriate judicial circuit for judicial review of such order in accordance with 5 U.S.C. chapter 7. The court will have jurisdiction to enter a judgment affirming, modifying, or setting aside in whole or in part, the order of the Secretary, or the court may remand the proceeding to the Secretary for such further action as the court may direct.

(c)(1) In the case of any civil penalty with respect to which the procedures of this paragraph have been elected, the Secretary will promptly assess such penalty, by order, after the date of the receipt of the notice under paragraph (a) of this section of the proposed penalty.

(2) If the person has not paid the civil penalty within 60 calendar days after the assessment has been made under paragraph (c)(1) of this section, the Secretary will institute an action in the appropriate District Court of the United States for an order affirming the assessment of the civil penalty. The court will have authority to review de novo the law and the facts involved and jurisdiction to enter a judgment enforcing, modifying, and enforcing as so modified, or setting aside in whole or in part, such assessment.

(3) Any election to have this paragraph apply can only be revoked with the consent of the Secretary.

(d) If any person fails to pay an assessment of a civil penalty after it has become a final and unappealable order under paragraph (b) of this section, or after the appropriate District Court has entered final judgment in favor of the Secretary under paragraph (c) of this section, the Secretary will institute an action to recover the amount of such penalty in any appropriate District Court of the United States. In such action, the validity and appropriateness of such final assessment order or judgment will not be subject to review.

(e)(1) In accordance with the provisions of sections 333(d)(5)(A) and 345 of the Act and notwithstanding the provisions of title 28, United States Code, or Section 502(c) of the Department of Energy Organization Act, the General Counsel of the Department of Energy (or any attorney or attorneys within DOE designated by the Secretary) will represent the Secretary, and will supervise, conduct, and argue any civil litigation to which paragraph (c) of this section applies (including any related collection action under paragraph (d) of this section) in a court of the United States or in any other court, except the Supreme Court of the United States. However, the Secretary or the General Counsel will consult with the Attorney General concerning such litigation and the Attorney General will provide, on request, such assistance in the conduct of such litigation as may be appropriate.

(2) In accordance with the provisions of sections 333(d)(5)(B) and 345 of the Act, and subject to the provisions of Section 502(c) of the Department of Energy Organization Act, the Secretary will be represented by the Attorney General, or the Solicitor General, as appropriate, in actions under this section, except to the extent provided in paragraph (e)(1) of this section.

(3) In accordance with the provisions of Section 333(d)(5)(c) and 345 of the Act, Section 402(d) of the Department of Energy Organization Act will not apply with respect to the function of the Secretary under this section.

APPENDIX A TO SUBPART U OF PART 431—SAMPLING PLAN FOR ENFORCEMENT TESTING OF ELECTRIC MOTORS

Step 1. The first sample size (n_1) must be five or more units.

Step 2. Compute the mean ($\bar{X}_1$ of the measured energy performance of the n_1 units in the first sample as follows:

$$\overline{X}_1 = \frac{1}{n_1}\sum_{i=1}^{n_1} X_i \qquad (1)$$

where X_i is the measured full-load efficiency of unit i.

Step 3. Compute the sample standard deviation (S_1) of the measured full-load efficiency of the n_1 units in the first sample as follows:

$$S_1 = \sqrt{\frac{\sum_{i=1}^{n_1}\left(X_i - \overline{X}_1\right)^2}{n_1 - 1}} \qquad (2)$$

Step 4. Compute the standard error ($SE(\bar{X}_1)$) of the mean full-load efficiency of the first sample as follows:

$$SE\left(\overline{X}_1\right) = \frac{S_1}{\sqrt{n_1}} \qquad (3)$$

Step 5. Compute the lower control limit (LCL_1) for the mean of the first sample using RE as the desired mean as follows:

$$LCL_1 = RE - tSE\left(\overline{X}_1\right) \qquad (4)$$

where: RE is the applicable EPCA nominal full-load efficiency when the test is to determine compliance with the applicable statutory standard, or is the labeled nominal full-load efficiency when the test is to determine compliance with the labeled efficiency value, and t is the 2.5th percentile of a t-distribution for a sample size of n_1, which yields a 97.5 percent confidence level for a one-tailed t-test.

Step 6. Compare the mean of the first sample ($\bar{X}_1$) with the lower control limit (LCL_1) to determine one of the following:

(i) If the mean of the first sample is below the lower control limit, then the basic model is in non-compliance and testing is at an end.

(ii) If the mean is equal to or greater than the lower control limit, no final determination of compliance or non-compliance can be made; proceed to Step 7.

Step 7. Determine the recommended sample size (n) as follows:

$$n = \left[\frac{tS_1(120 - 0.2RE)}{RE\,(20 - 0.2RE)}\right]^2 \qquad (5)$$

where S_1, RE and t have the values used in Steps 3 and 5, respectively. The factor

$$\frac{120 - 0.2RE}{RE\,(20 - 0.2RE)}$$

is based on a 20 percent tolerance in the total power loss at full-load and fixed output power.

Given the value of n, determine one of the following:

(i) If the value of n is less than or equal to n_1 and if the mean energy efficiency of the first sample ($\bar{X}_1$) is equal to or greater than the lower control limit (LCL_1), the basic model is in compliance and testing is at an end.

(ii) If the value of n is greater than n1, the basic model is in non-compliance. The size of a second sample n_2 is determined to be the smallest integer equal to or greater than the difference $n - n_1$. If the value of n_2 so calculated is greater than $20 - n1$, set n_2 equal to $20 - n_1$.

Step 8. Compute the combined ($\bar{X}_2$) mean of the measured energy performance of the n_1 and n_2 units of the combined first and second samples as follows:

$$\overline{X}_2 = \frac{1}{n_1 + n_2}\sum_{i=1}^{n_1+n_2} X_i \qquad (6)$$

Step 9. Compute the standard error ($SE(\bar{X}_2)$) of the mean full-load efficiency of the n_1 and n_2 units in the combined first and second samples as follows:

$$SE\,(\overline{X}_2) = \frac{S_1}{\sqrt{n_1 + n_2}} \qquad (7)$$

(Note that S_1 is the value obtained above in Step 3.)

Step 10. Set the lower control limit (LCL_2) to,

$$LCL_2 = RE - tSE\,(\overline{X}_2) \qquad (8)\sqrt{b^2 - 4ac}$$

where t has the value obtained in Step 5, and compare the combined sample mean ($\bar{X}_2$) to the lower control limit (LCL_2) to find one of the following:

(i) If the mean of the combined sample ($\bar{X}_2$) is less than the lower control limit (LCL_2), the basic model is in non-compliance and testing is at an end.

(ii) If the mean of the combined sample ($\bar{X}_2$) is equal to or greater than the lower control limit (LCL_2), the basic model is in compliance and testing is at an end.

MANUFACTURER-OPTION TESTING

If a determination of non-compliance is made in Steps 6, 7 or 10, of this appendix A, the manufacturer may request that additional testing be conducted, in accordance with the following procedures.

Step A. The manufacturer requests that an additional number, n_3, of units be tested, with n_3 chosen such that $n_1 + n_2 + n_3$ does not exceed 20.

Step B. Compute the mean full-load efficiency, standard error, and lower control limit of the new combined sample in accordance with the procedures prescribed in Steps 8, 9, and 10, of this appendix A.

Step C. Compare the mean performance of the new combined sample to the lower control limit (LCL_2) to determine one of the following:

(a) If the new combined sample mean is equal to or greater than the lower control

limit, the basic model is in compliance and testing is at an end.

(b) If the new combined sample mean is less than the lower control limit and the value of $n_1 + n_2 + n_3$ is less than 20, the manufacturer may request that additional units be tested. The total of all units tested may not exceed 20. Steps A, B, and C are then repeated.

(c) Otherwise, the basic model is determined to be in non-compliance.

Subpart V—General Provisions

SOURCE: 69 FR 61941, Oct. 21, 2004, unless otherwise noted. Redesignated at 70 FR 60417, Oct. 18, 2005.

§ 431.401 Petitions for waiver and interim waiver.

(a) *General information.* This section provides a means for seeking waivers of the test procedure requirements of this part for basic models that meet the requirements of paragraph (a)(1) of this section. In granting a waiver or interim waiver, DOE will not change the energy use or efficiency metric that the manufacturer must use to certify compliance with the applicable energy conservation standard and to make representations about the energy use or efficiency of the covered equipment. The granting of a waiver or interim waiver by DOE does not exempt such basic models from any other regulatory requirement contained in this part or the certification and compliance requirements of 10 CFR part 429 and specifies an alternative method for testing the basic model(s) addressed in the waiver.

(1) Any interested person may submit a petition to waive for a particular basic model the requirements of any uniform test method contained in this part, upon the grounds that either the basic model contains one or more design characteristics that prevent testing of the basic model according to the prescribed test procedures or cause the prescribed test procedures to evaluate the basic model in a manner so unrepresentative of its true energy or water consumption characteristics as to provide materially inaccurate comparative data.

(2) Manufacturers of basic model(s) subject to a waiver or interim waiver are responsible for complying with the other requirements of this part and with the requirements of 10 CFR part 429 regardless of the person that originally submitted the petition for waiver and/or interim waiver. The filing of a petition for waiver and/or interim waiver shall not constitute grounds for noncompliance with any requirements of this part.

(3) All correspondence regarding waivers and interim waivers must be submitted to DOE either electronically to *AS_Waiver_Requests@ee.doe.gov* (preferred method of transmittal) or by mail to U.S. Department of Energy, Building Technologies Program, Test Procedure Waiver, 1000 Independence Avenue SW., Mailstop EE–5B, Washington, DC 20585–0121.

(b) *Petition content and publication.* (1) Each petition for waiver must:

(i) Identify the particular basic model(s) for which a waiver is requested, each brand name under which the identified basic model(s) will be distributed in commerce, the design characteristic(s) constituting the grounds for the petition, and the specific requirements sought to be waived, and must discuss in detail the need for the requested waiver;

(ii) Identify manufacturers of all other basic models distributed in commerce in the United States and known to the petitioner to incorporate design characteristic(s) similar to those found in the basic model that is the subject of the petition;

(iii) Include any alternate test procedures known to the petitioner to evaluate the performance of the equipment type in a manner representative of the energy and/or water consumption characteristics of the basic model; and

(iv) Be signed by the petitioner or an authorized representative. In accordance with the provisions set forth in 10 CFR 1004.11, any request for confidential treatment of any information contained in a petition for waiver or in supporting documentation must be accompanied by a copy of the petition, application or supporting documentation from which the information claimed to be confidential has been deleted. DOE will publish in the FEDERAL REGISTER the petition and supporting documents from which confidential information, as determined by DOE, has

been deleted in accordance with 10 CFR 1004.11 and will solicit comments, data and information with respect to the determination of the petition.

(2) Each petition for interim waiver must reference the related petition for waiver by identifying the particular basic model(s) for which a waiver is being sought. Each petition for interim waiver must demonstrate likely success of the petition for waiver and address what economic hardship and/or competitive disadvantage is likely to result absent a favorable determination on the petition for interim waiver. Each petition for interim waiver must be signed by the petitioner or an authorized representative.

(c) *Notification to other manufacturers.* (1) Each petitioner for interim waiver must, upon publication of a grant of an interim waiver in the FEDERAL REGISTER, notify in writing all known manufacturers of domestically marketed basic models of the same equipment class (as specified in the relevant subpart of 10 CFR part 431), and of other equipment classes known to the petitioner to use the technology or have the characteristic at issue in the waiver. The notice must include a statement that DOE has published the interim waiver and petition for waiver in the FEDERAL REGISTER and the date the petition for waiver was published. The notice must also include a statement that DOE will receive and consider timely written comments on the petition for waiver. Within five working days, each petitioner must file with DOE a statement certifying the names and addresses of each person to whom a notice of the petition for waiver has been sent.

(2) If a petitioner does not request an interim waiver and notification has not been provided pursuant to paragraph (c)(1) of this section, each petitioner, after filing a petition for waiver with DOE, and after the petition for waiver has been published in the FEDERAL REGISTER, must, within five working days of such publication, notify in writing all known manufacturers of domestically marketed basic models of the same equipment class (as listed in the relevant subpart of 10 CFR part 431), and of other equipment classes known to the petitioner to use the technology or have the characteristic at issue in the waiver. The notice must include a statement that DOE has published the petition in the FEDERAL REGISTER and the date the petition for waiver was published. Within five working days of the publication of the petition in the FEDERAL REGISTER, each petitioner must file with DOE a statement certifying the names and addresses of each person to whom a notice of the petition for waiver has been sent.

(d) *Public comment and rebuttal.* (1) Any person submitting written comments to DOE with respect to an interim waiver must also send a copy of the comments to the petitioner by the deadline specified in the notice.

(2) Any person submitting written comments to DOE with respect to a petition for waiver must also send a copy of such comments to the petitioner.

(3) A petitioner may, within 10 working days of the close of the comment period specified in the FEDERAL REGISTER, submit a rebuttal statement to DOE. A petitioner may rebut more than one comment in a single rebuttal statement.

(e) Provisions specific to interim waivers—(1) Disposition of application. If administratively feasible, DOE will notify the applicant in writing of the disposition of the petition for interim waiver within 30 business days of receipt of the application. Notice of DOE's determination on the petition for interim waiver will be published in the FEDERAL REGISTER.

(2) Criteria for granting. DOE will grant an interim waiver from the test procedure requirements if it appears likely that the petition for waiver will be granted and/or if DOE determines that it would be desirable for public policy reasons to grant immediate relief pending a determination on the petition for waiver.

(f) *Provisions specific to waivers*—(1) Disposition of application. The petitioner shall be notified in writing as soon as practicable of the disposition of each petition for waiver. DOE shall issue a decision on the petition as soon as is practicable following receipt and review of the Petition for Waiver and other applicable documents, including,

but not limited to, comments and rebuttal statements.

(2) Criteria for granting. DOE will grant a waiver from the test procedure requirements if DOE determines either that the basic model(s) for which the waiver was requested contains a design characteristic that prevents testing of the basic model according to the prescribed test procedures, or that the prescribed test procedures evaluate the basic model in a manner so unrepresentative of its true energy or water consumption characteristics as to provide materially inaccurate comparative data. DOE may grant a waiver subject to conditions, which may include adherence to alternate test procedures specified by DOE. DOE will promptly publish in the FEDERAL REGISTER notice of each waiver granted or denied, and any limiting conditions of each waiver granted.

(g) *Extension to additional basic models.* A petitioner may request that DOE extend the scope of a waiver or an interim waiver to include additional basic models employing the same technology as the basic model(s) set forth in the original petition. DOE will publish any such extension in the FEDERAL REGISTER.

(h) *Duration.* (1) Within one year of issuance of an interim waiver, DOE will either:

(i) Publish in the FEDERAL REGISTER a determination on the petition for waiver; or

(ii) Publish in the FEDERAL REGISTER a new or amended test procedure that addresses the issues presented in the waiver.

(2) When DOE amends the test procedure to address the issues presented in a waiver, the waiver will automatically terminate on the date on which use of that test procedure is required to demonstrate compliance.

(i) *Compliance Certification.* (1) If the alternate test procedure specified in the interim waiver differs from the alternate test procedure specified by DOE in a subsequent decision and order granting the petition for waiver, a manufacturer who has already certified basic models using the procedure permitted in DOE's grant of an interim test procedure waiver is not required to re-test and re-rate those basic models so long as: The manufacturer used that alternative procedure to certify the compliance of the basic model after DOE granted the company's interim waiver request; changes have not been made to those basic models that would cause them to use more energy or otherwise be less energy efficient; and the manufacturer does not modify the certified rating. However, if the alternate test procedure specified in the interim waiver differs from the alternate test procedure specified by DOE in a subsequent decision and order granting the petition for waiver and if specified by DOE in the decision and order, the manufacturer must re-test and re-certify compliance using the procedure specified by DOE in the decision and order by the time of the next annual certification.

(2) After DOE publishes a decision and order in the FEDERAL REGISTER, a manufacturer must use the test procedure contained in that notice to rate any basic models covered by the waiver that have not yet been certified to DOE and for any future testing of any basic model(s) covered by the decision and order.

(j) *Petition for waiver required of other manufactures.* Within 60 days after DOE issues a waiver to a manufacturer for equipment employing a particular technology or having a particular characteristic, any manufacturer currently distributing in commerce in the United States equipment employing a technology or characteristic that results in the same need for a waiver (as specified by DOE in the published decision and order on the petition in the FEDERAL REGISTER) must submit a petition for waiver pursuant to the requirements of this section. Manufacturers not currently distributing such equipment in commerce in the United States must petition for and be granted a waiver prior to distribution in commerce in the United States. Manufacturers may also submit a request for interim waiver pursuant to the requirements of this section.

(k) *Rescission or modification.* (1) DOE may rescind or modify a waiver or interim waiver at any time upon DOE's determination that the factual basis underlying the petition for waiver or interim waiver is incorrect, or upon a

determination that the results from the alternate test procedure are unrepresentative of the basic model(s)' true energy consumption characteristics. Waivers and interim waivers are conditioned upon the validity of statements, representations, and documents provided by the requestor; any evidence that the original grant of a waiver or interim waiver was based upon inaccurate information will weigh against continuation of the waiver. DOE's decision will specify the basis for its determination and, in the case of a modification, will also specify the change to the authorized test procedure.

(2) A person may request that DOE rescind or modify a waiver or interim waiver issued to that person if the person discovers an error in the information provided to DOE as part of its petition, determines that the waiver is no longer needed, or for other appropriate reasons. In a request for rescission, the requestor must provide a statement explaining why it is requesting rescission. In a request for modification, the requestor must explain the need for modification to the authorized test procedure and detail the modifications needed and the corresponding impact on measured energy consumption.

(3) DOE will publish a proposed rescission or modification (DOE-initiated or at the request of the original requestor) in the FEDERAL REGISTER for public comment. A requestor may, within 10 working days of the close of the comment period specified in the proposed rescission or modification published in the FEDERAL REGISTER, submit a rebuttal statement to DOE. A requestor may rebut more than one comment in a single rebuttal statement.

(4) DOE will publish its decision in the FEDERAL REGISTER. DOE's determination will be based on relevant information contained in the record and any comments received.

(5) After the effective date of a rescission, any basic model(s) previously subject to a waiver must be tested and certified using the applicable DOE test procedure in 10 CFR part 431.

(l) *Revision of regulation.* As soon as practicable after the granting of any waiver, DOE will publish in the FEDERAL REGISTER a notice of proposed rulemaking to amend its regulations so as to eliminate any need for the continuation of such waiver. As soon thereafter as practicable, DOE will publish in the FEDERAL REGISTER a final rule.

(m) To exhaust administrative remedies, any person aggrieved by an action under this section must file an appeal with the DOE's Office of Hearings and Appeals as provided in 10 CFR part 1003, subpart C.

[79 FR 26601, May 9, 2014]

§ 431.402 Preemption of State regulations for commercial HVAC & WH products.

Beginning on the effective date of such standard, an energy conservation standard set forth in this part for a commercial HVAC & WH product supersedes any State or local regulation concerning the energy efficiency or energy use of that product, except as provided for in Section 345(b)(2)(B)–(D) of the Act.

§ 431.403 Maintenance of records for electric motors.

(a) Manufacturers of electric motors must establish, maintain and retain records of the following:

(1) The test data for all testing conducted pursuant to this part;

(2) The development, substantiation, application, and subsequent verification of any AEDM used under this part;

(3) Any written certification received from a certification program, including a certificate or conformity, relied on under the provisions of this part;

(b) You must organize such records and index them so that they are readily accessible for review. The records must include the supporting test data associated with tests performed on any test units to satisfy the requirements of this part (except tests performed by DOE).

(c) For each basic model, you must retain all such records for a period of two years from the date that production of all units of that basic model has ceased. You must retain records in a form allowing ready access to DOE, upon request.

[76 FR 12505, Mar. 7, 2011]

§ 431.404 Imported electric motors.

(a) Under sections 331 and 345 of the Act, any person importing an electric motor into the United States must comply with the provisions of the Act and of this part, and is subject to the remedies of this part.

(b) Any electric motor offered for importation in violation of the Act and of this part will be refused admission into the customs territory of the United States under rules issued by the Secretary of the Treasury, except that the Secretary of the Treasury may, by such rules, authorize the importation of such electric motor upon such terms and conditions (including the furnishing of a bond) as may appear to the Secretary of the Treasury appropriate to ensure that such electric motor will not violate the Act and this part, or will be exported or abandoned to the United States.

[76 FR 12505, Mar. 7, 2011]

§ 431.405 Exported electric motors.

Under Sections 330 and 345 of the Act, this part does not apply to any electric motor if:

(a) Such electric motor is manufactured, sold, or held for sale for export from the United States (or such electric motor was imported for export), unless such electric motor is, in fact, distributed in commerce for use in the United States; and,

(b) Such electric motor, when distributed in commerce, or any container in which it is enclosed when so distributed, bears a stamp or label stating that such electric motor is intended for export.

[76 FR 12505, Mar. 7, 2011]

§ 431.406 Subpoena—Electric Motors.

Pursuant to sections 329(a) and 345 of the Act, for purposes of carrying out this part, the Secretary or the Secretary's designee, may sign and issue subpoenas for the attendance and testimony of witnesses and the production of relevant books, records, papers, and other documents, and administer the oaths. Witnesses summoned under the provisions of this section shall be paid the same fees and mileage as are paid to witnesses in the courts of the United States. In case of contumacy by, or refusal to obey a subpoena served upon any persons subject to this part, the Secretary may seek an order from the District Court of the United States for any District in which such person is found or resides or transacts business requiring such person to appear and give testimony, or to appear and produce documents. Failure to obey such order is punishable by such court as a contempt thereof.

[76 FR 12505, Mar. 7, 2011]

§ 431.407 Confidentiality—Electric Motors.

Pursuant to the provisions of 10 CFR 1004.11, any manufacturer or private labeler of electric motors submitting information or data which they believe to be confidential and exempt from public disclosure should submit one complete copy, and 15 copies from which the information believed to be confidential has been deleted. In accordance with the procedures established at 10 CFR 1004.11, the Department shall make its own determination with regard to any claim that information submitted be exempt from public disclosure.

[76 FR 12505, Mar. 7, 2011]

§ 431.408 Preemption of State regulations for covered equipment other than electric motors and commercial heating, ventilating, air-conditioning and water heating products.

This section concerns State regulations providing for any energy conservation standard, or water conservation standard (in the case of commercial prerinse spray valves or commercial clothes washers), or other requirement with respect to the energy efficiency, energy use, or water use (in the case of commercial prerinse spray valves or commercial clothes washers), for any covered equipment other than an electric motor or commercial HVAC and WH product. Any such regulation that contains a standard or requirement that is not identical to a Federal standard in effect under this subpart is preempted by that standard, except as provided for in sections 327(b) and (c) and 345(a)(10), (e), (f) and (g) of the Act.

[75 FR 675, Jan. 5, 2010, as amended at 78 FR 62993, Oct. 23, 2013]

Subpart W—Petitions To Exempt State Regulation From Preemption; Petitions To Withdraw Exemption of State Regulation

SOURCE: 69 FR 61941, Oct. 21, 2004, unless otherwise noted. Redesignated at 70 FR 60417, Oct. 18, 2005.

§431.421 Purpose and scope.

(a) The regulations in this subpart prescribe the procedures to be followed in connection with petitions requesting a rule that a State regulation prescribing an energy conservation standard or other requirement respecting energy use or energy efficiency of a type (or class) of covered equipment not be preempted.

(b) The regulations in this subpart also prescribe the procedures to be followed in connection with petitions to withdraw a rule exempting a State regulation prescribing an energy conservation standard or other requirement respecting energy use or energy efficiency of a type (or class) of covered equipment.

§431.422 Prescriptions of a rule.

(a) *Criteria for exemption from preemption.* Upon petition by a State which has prescribed an energy conservation standard or other requirement for a type or class of covered equipment for which a Federal energy conservation standard is applicable, the Secretary shall prescribe a rule that such standard not be preempted if he/she determines that the State has established by a preponderance of evidence that such requirement is needed to meet unusual and compelling State or local energy interests. For the purposes of this regulation, the term ''unusual and compelling State or local energy interests'' means interests which are substantially different in nature or magnitude from those prevailing in the U.S. generally, and are such that when evaluated within the context of the State's energy plan and forecast, the costs, benefits, burdens, and reliability of energy savings resulting from the State regulation make such regulation preferable or necessary when measured against the costs, benefits, burdens, and reliability of alternative approaches to energy savings or production, including reliance on reasonably predictable market-induced improvements in efficiency of all equipment subject to the State regulation. The Secretary may not prescribe such a rule if he finds that interested persons have established, by a preponderance of the evidence, that the State's regulation will significantly burden manufacturing, marketing, distribution, sale or servicing of the covered equipment on a national basis. In determining whether to make such a finding, the Secretary shall evaluate all relevant factors including: The extent to which the State regulation will increase manufacturing or distribution costs of manufacturers, distributors, and others; the extent to which the State regulation will disadvantage smaller manufacturers, distributors, or dealers or lessen competition in the sale of the covered equipment in the State; the extent to which the State regulation would cause a burden to manufacturers to redesign and produce the covered equipment type (or class), taking into consideration the extent to which the regulation would result in a reduction in the current models, or in the projected availability of models, that could be shipped on the effective date of the regulation to the State and within the U.S., or in the current or projected sales volume of the covered equipment type (or class) in the State and the U.S.; and the extent to which the State regulation is likely to contribute significantly to a proliferation of State commercial and industrial equipment efficiency requirements and the cumulative impact such requirements would have. The Secretary may not prescribe such a rule if he/she finds that such a rule will result in the unavailability in the State of any covered equipment (or class) of performance characteristics (including reliability), features, sizes, capacities, and volumes that are substantially the same as those generally available in the State at the time of the Secretary's finding. The failure of some classes (or types) to meet this criterion shall not affect the Secretary's determination of whether to prescribe a rule for other classes (or types).

(1) Requirements of petition for exemption from preemption. A petition from a State for a rule for exemption from preemption shall include the information listed in paragraphs (a)(1)(i) through (a)(1)(vi) of this section. A petition for a rule and correspondence relating to such petition shall be available for public review except for confidential or proprietary information submitted in accordance with the Department of Energy's Freedom of Information Regulations set forth in 10 CFR part 1004.

(i) The name, address, and telephone number of the petitioner;

(ii) A copy of the State standard for which a rule exempting such standard is sought;

(iii) A copy of the State's energy plan and forecast;

(iv) Specification of each type or class of covered equipment for which a rule exempting a standard is sought;

(v) Other information, if any, believed to be pertinent by the petitioner; and

(vi) Such other information as the Secretary may require.

(b) *Criteria for exemption from preemption when energy emergency conditions exist within State.* Upon petition by a State which has prescribed an energy conservation standard or other requirement for a type or class of covered equipment for which a Federal energy conservation standard is applicable, the Secretary may prescribe a rule, effective upon publication in the FEDERAL REGISTER, that such regulation not be preempted if he determines that in addition to meeting the requirements of paragraph (a) of this Section the State has established that: an energy emergency condition exists within the State that imperils the health, safety, and welfare of its residents because of the inability of the State or utilities within the State to provide adequate quantities of gas or electric energy to its residents at less than prohibitive costs; and cannot be substantially alleviated by the importation of energy or the use of interconnection agreements; and the State regulation is necessary to alleviate substantially such condition.

(1) Requirements of petition for exemption from preemption when energy emergency conditions exist within a State. A petition from a State for a rule for exemption from preemption when energy emergency conditions exist within a State shall include the information listed in paragraphs (a)(1)(i) through (a)(1)(vi) of this section. A petition shall also include the information prescribed in paragraphs (b)(1)(i) through (b)(1)(iv) of this section, and shall be available for public review except for confidential or proprietary information submitted in accordance with the Department of Energy's Freedom of Information Regulations set forth in 10 CFR part 1004:

(i) A description of the energy emergency condition which exists within the State, including causes and impacts.

(ii) A description of emergency response actions taken by the State and utilities within the State to alleviate the emergency condition;

(iii) An analysis of why the emergency condition cannot be alleviated substantially by importation of energy or the use of interconnection agreements;

(iv) An analysis of how the State standard can alleviate substantially such emergency condition.

(c) *Criteria for withdrawal of a rule exempting a State standard.* Any person subject to a State standard which, by rule, has been exempted from Federal preemption and which prescribes an energy conservation standard or other requirement for a type or class of covered equipment, when the Federal energy conservation standard for such equipment subsequently is amended, may petition the Secretary requesting that the exemption rule be withdrawn. The Secretary shall consider such petition in accordance with the requirements of paragraph (a) of this section, except that the burden shall be on the petitioner to demonstrate that the exemption rule received by the State should be withdrawn as a result of the amendment to the Federal standard. The Secretary shall withdraw such rule if he determines that the petitioner has shown the rule should be withdrawn.

(1) Requirements of petition to withdraw a rule exempting a State standard. A petition for a rule to withdraw a rule exempting a State standard shall

include the information prescribed in paragraphs (c)(1)(i) through (c)(1)(vii) of this section, and shall be available for public review, except for confidential or proprietary information submitted in accordance with the Department of Energy's Freedom of Information Regulations set forth in 10 CFR part 1004:

(i) The name, address and telephone number of the petitioner;

(ii) A statement of the interest of the petitioner for which a rule withdrawing an exemption is sought;

(iii) A copy of the State standard for which a rule withdrawing an exemption is sought;

(iv) Specification of each type or class of covered equipment for which a rule withdrawing an exemption is sought;

(v) A discussion of the factors contained in paragraph (a) of this section;

(vi) Such other information, if any, believed to be pertinent by the petitioner; and

(vii) Such other information as the Secretary may require.

(2) [Reserved]

§431.423 Filing requirements.

(a) *Service.* All documents required to be served under this subpart shall, if mailed, be served by first class mail. Service upon a person's duly authorized representative shall constitute service upon that person.

(b) *Obligation to supply information.* A person or State submitting a petition is under a continuing obligation to provide any new or newly discovered information relevant to that petition. Such information includes, but is not limited to, information regarding any other petition or request for action subsequently submitted by that person or State.

(c) *The same or related matters.* A person or State submitting a petition or other request for action shall state whether to the best knowledge of that petitioner the same or related issue, act, or transaction has been or presently is being considered or investigated by any State agency, department, or instrumentality.

(d) *Computation of time.* (1) Computing any period of time prescribed by or allowed under this subpart, the day of the action from which the designated period of time begins to run is not to be included. If the last day of the period is Saturday, or Sunday, or Federal legal holiday, the period runs until the end of the next day that is neither a Saturday, or Sunday or Federal legal holiday.

(2) Saturdays, Sundays, and intervening Federal legal holidays shall be excluded from the computation of time when the period of time allowed or prescribed is 7 days or less.

(3) When a submission is required to be made within a prescribed time, DOE may grant an extension of time upon good cause shown.

(4) Documents received after regular business hours are deemed to have been submitted on the next regular business day. Regular business hours for the DOE's National Office, Washington, DC, are 8:30 a.m. to 4:30 p.m.

(5) DOE reserves the right to refuse to accept, and not to consider, untimely submissions.

(e) *Filing of petitions.* (1) A petition for a rule shall be submitted in triplicate to: The Assistant Secretary for Energy Efficiency and Renewable Energy, U.S. Department of Energy, Section 327 Petitions, Building Technologies, EE–2J, Forrestal Building,1000 Independence Avenue, SW., Washington, DC 20585.

(2) A petition may be submitted on behalf of more than one person. A joint petition shall indicate each person participating in the submission. A joint petition shall provide the information required by §431.212 for each person on whose behalf the petition is submitted.

(3) All petitions shall be signed by the person(s) submitting the petition or by a duly authorized representative. If submitted by a duly authorized representative, the petition shall certify this authorization.

(4) A petition for a rule to withdraw a rule exempting a State regulation, all supporting documents, and all future submissions shall be served on each State agency, department, or instrumentality whose regulation the petitioner seeks to supersede. The petition shall contain a certification of this service which states the name and mailing address of the served parties, and the date of service.

(f) *Acceptance for filing.* (1) Within 15 days of the receipt of a petition, the Secretary will either accept it for filing or reject it, and the petitioner will be so notified in writing. The Secretary will serve a copy of this notification on each other party served by the petitioner. Only such petitions which conform to the requirements of this subpart and which contain sufficient information for the purposes of a substantive decision will be accepted for filing. Petitions which do not so conform will be rejected and an explanation provided to petitioner in writing.

(2) For purposes of the Act and this subpart, a petition is deemed to be filed on the date it is accepted for filing.

(g) *Docket.* A petition accepted for filing will be assigned an appropriate docket designation. Petitioner shall use the docket designation in all subsequent submissions.

§ 431.424 Notice of petition.

(a) Promptly after receipt of a petition and its acceptance for filing, notice of such petition shall be published in the FEDERAL REGISTER. The notice shall set forth the availability for public review of all data and information available, and shall solicit comments, data and information with respect to the determination on the petition. Except as may otherwise be specified, the period for public comment shall be 60 days after the notice appears in the FEDERAL REGISTER.

(b) In addition to the material required under paragraph (a) of this section, each notice shall contain a summary of the State regulation at issue and the petitioner's reasons for the rule sought.

§ 431.425 Consolidation.

DOE may consolidate any or all matters at issue in two or more proceedings docketed where there exist common parties, common questions of fact and law, and where such consolidation would expedite or simplify consideration of the issues. Consolidation shall not affect the right of any party to raise issues that could have been raised if consolidation had not occurred.

§ 431.426 Hearing.

The Secretary may hold a public hearing, and publish notice in the FEDERAL REGISTER of the date and location of the hearing, when he determines that such a hearing is necessary and likely to result in a timely and effective resolution of the issues. A transcript shall be kept of any such hearing.

§ 431.427 Disposition of petitions.

(a) After the submission of public comments under § 431.213(a), the Secretary shall prescribe a final rule or deny the petition within 6 months after the date the petition is filed.

(b) The final rule issued by the Secretary or a determination by the Secretary to deny the petition shall include a written statement setting forth his findings and conclusions, and the reasons and basis therefor. A copy of the Secretary's decision shall be sent to the petitioner and the affected State agency. The Secretary shall publish in the FEDERAL REGISTER a notice of the final rule granting or denying the petition and the reasons and basis therefor.

(c) If the Secretary finds that he cannot issue a final rule within the 6-month period pursuant to paragraph (a) of this section, he shall publish a notice in the FEDERAL REGISTER extending such period to a date certain, but no longer than one year after the date on which the petition was filed. Such notice shall include the reasons for the delay.

§ 431.428 Effective dates of final rules.

(a) A final rule exempting a State standard from Federal preemption will be effective:

(1) Upon publication in the FEDERAL REGISTER if the Secretary determines that such rule is needed to meet an ''energy emergency condition'' within the State;

(2) Three years after such rule is published in the FEDERAL REGISTER; or

(3) Five years after such rule is published in the FEDERAL REGISTER if the Secretary determines that such additional time is necessary due to the burdens of retooling, redesign or distribution.

(b) A final rule withdrawing a rule exempting a State standard will be effective upon publication in the FEDERAL REGISTER.

§ 431.429 Request for reconsideration.

(a) Any petitioner whose petition for a rule has been denied may request reconsideration within 30 days of denial. The request shall contain a statement of facts and reasons supporting reconsideration and shall be submitted in writing to the Secretary.

(b) The denial of a petition will be reconsidered only where it is alleged and demonstrated that the denial was based on error in law or fact and that evidence of the error is found in the record of the proceedings.

(c) If the Secretary fails to take action on the request for reconsideration within 30 days, the request is deemed denied, and the petitioner may seek such judicial review as may be appropriate and available.

(d) A petitioner has not exhausted other administrative remedies until a request for reconsideration has been filed and acted upon or deemed denied.

§ 431.430 Finality of decision.

(a) A decision to prescribe a rule that a State energy conservation standard or other requirement not be preempted is final on the date the rule is issued, *i.e.*, signed by the Secretary. A decision to prescribe such a rule has no effect on other regulations of covered equipment of any other State.

(b) A decision to prescribe a rule withdrawing a rule exempting a State standard or other requirement is final on the date the rule is issued, *i.e.*, signed by the Secretary. A decision to deny such a petition is final on the day a denial of a request for reconsideration is issued, *i.e.*, signed by the Secretary.

Subpart X—Small Electric Motors

SOURCE: 74 FR 32072, July 7, 2009, unless otherwise noted.

§ 431.441 Purpose and scope.

This subpart contains definitions, test procedures, and energy conservation requirements for small electric motors, pursuant to Part A–1 of Title III of the Energy Policy and Conservation Act, as amended, 42 U.S.C. 6311–6317. This subpart does not cover ''electric motors,'' which are addressed in subpart B of this part.

[77 FR 26638, May 4, 2012]

§ 431.442 Definitions.

The following definitions are applicable to this subpart:

Alternative efficiency determination method, or AEDM, means, with respect to a small electric motor, a method of calculating the total power loss and average full-load efficiency.

Average full-load efficiency means the arithmetic mean of the full-load efficiencies of a population of small electric motors of duplicate design, where the full-load efficiency of each motor in the population is the ratio (expressed as a percentage) of the motor's useful power output to its total power input when the motor is operated at its full rated load, rated voltage, and rated frequency.

Basic model means, with respect to a small electric motor, all units of a given type of small electric motor (or class thereof) manufactured by a single manufacturer, and which have the same rating, have electrical characteristics that are essentially identical, and do not have any differing physical or functional characteristics that affect energy consumption or efficiency. For the purpose of this definition, ''rating'' means a combination of the small electric motor's group (i.e., capacitor-start, capacitor-run; capacitor-start, induction-run; or polyphase), horsepower rating (or standard kilowatt equivalent), and number of poles with respect to which § 431.446 prescribes nominal full load efficiency standards.

CSA means Canadian Standards Association.

DOE or *the Department* means the U.S. Department of Energy.

EPCA means the Energy Policy and Conservation Act, as amended, 42 U.S.C. 6291–6317.

IEC means International Electrotechnical Commission.

IEEE means Institute of Electrical and Electronics Engineers, Inc.

NEMA means National Electrical Manufacturers Association.

Small electric motor means a NEMA general purpose alternating current single-speed induction motor, built in a two-digit frame number series in accordance with NEMA Standards Publication MG1–1987, including IEC metric equivalent motors.

[74 FR 32072, July 7, 2009, as amended at 77 FR 26638, May 4, 2012]

TEST PROCEDURES

§ 431.443 Materials incorporated by reference.

(a) *General*. The Department incorporates by reference the following standards into subpart X of part 431. The Director of the Federal Register has approved the material listed in paragraph (b) of this section for incorporation by reference in accordance with 5 U.S.C. 552(a) and 1 CFR part 51. Any subsequent amendment to a standard by the standard-setting organization will not affect the DOE test procedures unless and until the DOE amends its test procedures. DOE incorporates the material as it exists on the date of the approval and a notice of any change in the material will be published in the FEDERAL REGISTER. All approved material is available for inspection at the National Archives and Records Administration (NARA). For information on the availability of this material at NARA, call 202–741–6030, or go to: *http://www.archives.gov/federal_register/code_of_federal_regulations/ibr_locations.html*. Also, this material is available for inspection at U.S. Department of Energy, Office of Energy Efficiency and Renewable Energy, Building Technologies Program, Sixth Floor, 950 L'Enfant Plaza, SW., Washington, DC 20024, (202) 586–2945, or go to *http://www1.eere.energy.gov/buildings/appliance_standards/*. Standards can be obtained from the sources below.

(b) *CAN/CSA*. Canadian Standards Association, Sales Department, 5060 Spectrum Way, Suite 100, Mississauga, Ontario, L4W 5N6, Canada, 1–800–463–6727, or go to *http://www.shopcsa.ca/onlinestore/welcome.asp*.

(1) CSA C747–09 (''CSA C747''), Energy efficiency test methods for small motors, October 2009, IBR approved for §§ 431.444; 431.447.

(2) CSA C390–10, Test methods, marking requirements, and energy efficiency levels for three-phase induction motors, March 2010, IBR approved for §§ 431.444; 431.447.

(c) *IEEE*. Institute of Electrical and Electronics Engineers, Inc., 445 Hoes Lane, P.O. Box 1331, Piscataway, NJ 08855–1331, 1–800–678–IEEE (4333), or go to *http://www.ieee.org/web/publications/home/index.html*.

(1) IEEE Std 112–2004, Test Procedure for Polyphase Induction Motors and Generators, approved February 9, 2004, IBR approved as follows:

(i) Section 6.3, Efficiency Test Method A, Input-Output, IBR approved for §§ 431.444; 431.447;

(ii) Section 6.4, Efficiency Test Method B, Input-Output with Loss Segregation, IBR approved for §§ 431.444; 431.447.

(2) IEEE Std 114–2010, Test Procedure for Single-Phase Induction Motors, approved September 30, 2010, IBR approved for §§ 431.444; 431.447.

[74 FR 32072, July 7, 2009, as amended at 77 FR 26638, May 4, 2012]

§ 431.444 Test procedures for the measurement of energy efficiency.

(a) *Scope*. Pursuant to section 346(b)(1) of EPCA, this section provides the test procedures for measuring, pursuant to EPCA, the efficiency of small electric motors pursuant to EPCA. (42 U.S.C. 6317(b)(1)) For purposes of this part 431 and EPCA, the test procedures for measuring the efficiency of small electric motors shall be the test procedures specified in § 431.444(b).

(b) *Testing and Calculations*. Determine the energy efficiency and losses by using one of the following test methods:

(1) Single-phase small electric motors: Either IEEE Std 114–2010 or CSA C747 (incorporated by reference, see § 431.443);

(2) Polyphase small electric motors less than or equal to 1 horsepower (0.75 kW): Either IEEE Std 112–2004 Test Method A or CSA C747 (incorporated by reference, see § 431.443); or

(3) Polyphase small electric motors greater than 1 horsepower (0.75 kW): Either IEEE Std 112–2004 Test Method

B or CSA C390–10 (incorporated by reference, see § 431.443).

[74 FR 32072, July 7, 2009, as amended at 77 FR 26638, May 4, 2012]

§ 431.445 Determination of small electric motor efficiency.

(a) *Scope*. When a party determines the energy efficiency of a small electric motor to comply with an obligation imposed on it by or pursuant to Part A–1 of Title III of EPCA, 42 U.S.C. 6311–6317, this section applies.

(b) *Provisions applicable to all small electric motors*—(1) *General requirements*. The average full-load efficiency of each basic model of small electric motor must be determined either by testing in accordance with § 431.444 of this subpart, or by application of an alternative efficiency determination method (AEDM) that meets the requirements of paragraphs (a)(2) and (3) of this section, provided, however, that an AEDM may be used to determine the average full-load efficiency of one or more of a manufacturer's basic models only if the average full-load efficiency of at least five of its other basic models is determined through testing.

(2) *Alternative efficiency determination method*. An AEDM applied to a basic model must be:

(i) Derived from a mathematical model that represents the mechanical and electrical characteristics of that basic model, and

(ii) Based on engineering or statistical analysis, computer simulation or modeling, or other analytic evaluation of performance data.

(3) *Substantiation of an alternative efficiency determination method*. Before an AEDM is used, its accuracy and reliability must be substantiated as follows:

(i) The AEDM must be applied to at least five basic models that have been tested in accordance with § 431.444; and

(ii) The predicted total power loss for each such basic model, calculated by applying the AEDM, must be within plus or minus 10 percent of the mean total power loss determined from the testing of that basic model.

(4) *Subsequent verification of an AEDM*. (i) Each manufacturer that has used an AEDM under this section shall have available for inspection by the Department of Energy records showing the method or methods used; the mathematical model, the engineering or statistical analysis, computer simulation or modeling, and other analytic evaluation of performance data on which the AEDM is based; complete test data, product information, and related information that the manufacturer has generated or acquired pursuant to paragraph (a)(3) of this section; and the calculations used to determine the efficiency and total power losses of each basic model to which the AEDM was applied.

(ii) If requested by the Department, the manufacturer shall conduct simulations to predict the performance of particular basic models of small electric motors specified by the Department, analyses of previous simulations conducted by the manufacturer, sample testing of basic models selected by the Department, or a combination of the foregoing.

(5) *Use of a certification program*. (i) A manufacturer may use a certification program, that DOE has classified as nationally recognized under § 431.447, to certify the average full-load efficiency of a basic model of small electric motor, and issue a certificate of conformity for the small electric motor.

(ii) For each basic model for which a certification program is not used as described in paragraph (b)(5)(i) of this section, any testing of a motor to determine its energy efficiency must be carried out in accordance with paragraph (c) of this section.

(c) *Additional testing requirements applicable when a certification program is not used*—(1) *Selection of basic models for testing*. (i) Basic models must be selected for testing in accordance with the following criteria:

(A) Two of the basic models must be among the five basic models that have the highest unit volumes of production by the manufacturer in the prior year, or during the prior 12 calendar month period beginning in 2015, whichever is later, and comply with the standards set forth in § 431.446;

(B) The basic models should be of different horsepowers without duplication;

(C) At least one basic model should be selected from each of the frame

number series for which the manufacturer is seeking compliance; and

(D) Each basic model should have the lowest average full-load efficiency among the basic models with the same rating (''rating'' as used here has the same meaning as it has in the definition of ''basic model'').

(ii) In any instance where it is impossible for a manufacturer to select basic models for testing in accordance with all of these criteria, the criteria shall be given priority in the order in which they are listed. Within the limits imposed by the criteria, basic models shall be selected randomly.

(2) *Selection of units for testing within a basic model.* For each basic model selected for testing,[1] a sample of units shall be selected at random and tested. The sample shall be comprised of production units of the basic model, or units that are representative of such production units. The sample size shall be no fewer than five units, except when fewer than five units of a basic model would be produced over a reasonable period of time (approximately 180 days). In such cases, each unit produced shall be tested.

(3) *Applying results of testing.* When applying the test results to determine whether a motor complies with the required average efficiency level:

The average full-load efficiency of the sample, $\bar{X}$ which is defined by

$$\overline{X} = \frac{1}{n}\sum_{i=1}^{n} X_i$$

where X_i is the measured full-load efficiency of unit i and n is the number of units tested, shall satisfy the condition:

$$\overline{X} \geq \frac{100}{1 + 1.05\left(\frac{100}{RE} - 1\right)}$$

where RE is the required average full-load efficiency.

[74 FR 32072, July 7, 2009, as amended at 77 FR 26638, May 4, 2012]

[1] Components of similar design may be substituted without requiring additional testing if the represented measures of energy consumption continue to satisfy the applicable sampling provision.

ENERGY CONSERVATION STANDARDS

§ 431.446 Small electric motors energy conservation standards and their effective dates.

(a) Each small electric motor manufactured (alone or as a component of another piece of non-covered equipment) after March 9, 2015, or in the case of a small electric motor which requires listing or certification by a nationally recognized safety testing laboratory, after March 9, 2017, shall have an average full load efficiency of not less than the following:

Motor horsepower/standard kilowatt equivalent	Average full load efficiency		
	Polyphase		
	Open motors (number of poles)		
	6	4	2
0.25/0.18	67.5	69.5	65.6
0.33/0.25	71.4	73.4	69.5
0.5/0.37	75.3	78.2	73.4
0.75/0.55	81.7	81.1	76.8
1/0.75	82.5	83.5	77.0
1.5/1.1	83.8	86.5	84.0
2/1.5	N/A	86.5	85.5
3/2.2	N/A	86.9	85.5

Motor horsepower/standard kilowatt equivalent	Average full load efficiency		
	Capacitor-start capacitor-run and capacitor-start induction-run		
	Open motors (number of poles)		
	6	4	2
0.25/0.18	62.2	68.5	66.6
0.33/0.25	66.6	72.4	70.5
0.5/0.37	76.2	76.2	72.4
0.75/0.55	80.2	81.8	76.2
1/0.75	81.1	82.6	80.4
1.5/1.1	N/A	83.8	81.5
2/1.5	N/A	84.5	82.9
3/2.2	N/A	N/A	84.1

(b) For purposes of determining the required minimum average full load efficiency of an electric motor that has a horsepower or kilowatt rating between two horsepower or two kilowatt ratings listed in any table of efficiency standards in paragraph (a) of this section, each such motor shall be deemed to have a listed horsepower or kilowatt rating, determined as follows:

(1) A horsepower at or above the midpoint between the two consecutive horsepower ratings shall be rounded up to the higher of the two horsepower ratings;

(2) A horsepower below the midpoint between the two consecutive horsepower ratings shall be rounded down to

the lower of the two horsepower ratings; or

(3) A kilowatt rating shall be directly converted from kilowatts to horsepower using the formula 1 kilowatt = (1/0.746) hp, without calculating beyond three significant decimal places, and the resulting horsepower shall be rounded in accordance with paragraphs (b)(1) or (b)(2) of this section, whichever applies.

[75 FR 10947, Mar. 9, 2010; 75 FR 17036, Apr. 5, 2010]

§431.447 Department of Energy recognition of nationally recognized certification programs.

(a) *Petition*. For a certification program to be classified by the Department of Energy as being nationally recognized in the United States (''nationally recognized''), the organization operating the program must submit a petition to the Department requesting such classification, in accordance with paragraph (c) of this section and §431.448. The petition must demonstrate that the program meets the criteria in paragraph (b) of this section.

(b) *Evaluation criteria*. For a certification program to be classified by the Department as nationally recognized, it must meet the following criteria:

(1) It must have satisfactory standards and procedures for conducting and administering a certification system, including periodic follow up activities to assure that basic models of small electric motors continue to conform to the efficiency levels for which they were certified, and for granting a certificate of conformity.

(2) It must be independent of small electric motor manufacturers, importers, distributors, private labelers or vendors. It cannot be affiliated with, have financial ties with, be controlled by, or be under common control with any such entity.

(3) It must be qualified to operate a certification system in a highly competent manner.

(4) It must be expert in the content and application of the test procedures and methodologies in IEEE Std 112–2004 Test Methods A and B, IEEE Std 114–2010, CSA C390–10, and CSA C747 (incorporated by reference, see §431.443) or similar procedures and methodologies for determining the energy efficiency of small electric motors. It must have satisfactory criteria and procedures for the selection and sampling of electric motors tested for energy efficiency.

(c) *Petition format*. Each petition requesting classification as a nationally recognized certification program must contain a narrative statement as to why the program meets the criteria listed in paragraph (b) of this section, must be signed on behalf of the organization operating the program by an authorized representative, and must be accompanied by documentation that supports the narrative statement. The following provides additional guidance as to the specific criteria:

(1) *Standards and procedures*. A copy of the standards and procedures for operating a certification system and for granting a certificate of conformity should accompany the petition.

(2) *Independent status*. The petitioning organization should identify and describe any relationship, direct or indirect, that it or the certification program has with an electric motor manufacturer, importer, distributor, private labeler, vendor, trade association or other such entity, as well as any other relationship it believes might appear to create a conflict of interest for the certification program in operating a certification system for determining the compliance of small electric motors with the applicable energy efficiency standards. It should explain why it believes such relationship would not compromise its independence in operating a certification program.

(3) *Qualifications to operate a certification system*. Experience in operating a certification system should be discussed and substantiated by supporting documents. Of particular relevance would be documentary evidence that establishes experience in the application of guidelines contained in the ISO/IEC Guide 65, General requirements for bodies operating product certification systems, ISO/IEC Guide 27, Guidelines for corrective action to be taken by a certification body in the event of either misapplication of its mark of conformity to a product, or products

which bear the mark of the certification body being found to subject persons or property to risk, and ISO/IEC Guide 28, General rules for a model third-party certification system for products, as well as experience in overseeing compliance with the guidelines contained in the ISO/IEC Guide 25, General requirements for the competence of calibration and testing laboratories.

(4) *Expertise in small electric motor test procedures*. The petition should set forth the program's experience with the test procedures and methodologies in IEEE Std 112–2004 Test Methods A and B, IEEE Std 114–2010, CSA C390–10, and CSA C747–(incorporated by reference, see § 431.443) and with similar procedures and methodologies. This part of the petition should include items such as, but not limited to, a description of prior projects and qualifications of staff members. Of particular relevance would be documentary evidence that establishes experience in applying guidelines contained in the ISO/IEC Guide 25, General Requirements for the Competence of Calibration and Testing Laboratories to energy efficiency testing for electric motors.

(5) The ISO/IEC Guides referenced in paragraphs (c)(3) and (c)(4) of this section are not incorporated by reference, but are for information and guidance only. International Organization for Standardization (ISO), 1, ch. de la Voie-Creuse, CP 56, CH–1211 Geneva 20, Switzerland/International Electrotechnical Commission, 3, rue de Varembé, P.O. Box 131, CH–1211 Geneva 20, Switzerland.

(d) *Disposition*. The Department will evaluate the petition in accordance with § 431.448, and will determine whether the applicant meets the criteria in paragraph (b) of this section for classification as a nationally recognized certification program.

[77 FR 26639, May 4, 2012]

§ 431.448 Procedures for recognition and withdrawal of recognition of certification programs.

(a) *Filing of petition*. Any petition submitted to the Department pursuant to § 431.447(a), shall be entitled ''Petition for Recognition'' (''Petition'') and must be submitted, in triplicate to the Assistant Secretary for Energy Efficiency and Renewable Energy, U.S. Department of Energy, Forrestal Building, 1000 Independence Avenue SW., Washington, DC 20585–0121. In accordance with the provisions set forth in 10 CFR 1004.11, any request for confidential treatment of any information contained in such a Petition or in supporting documentation must be accompanied by a copy of the Petition or supporting documentation from which the information claimed to be confidential has been deleted.

(b) *Public notice and solicitation of comments*. DOE shall publish in the FEDERAL REGISTER the Petition from which confidential information, as determined by DOE, has been deleted in accordance with 10 CFR 1004.11 and shall solicit comments, data and information on whether the Petition should be granted. The Department shall also make available for inspection and copying the Petition's supporting documentation from which confidential information, as determined by DOE, has been deleted in accordance with 10 CFR 1004.11. Any person submitting written comments to DOE with respect to a Petition shall also send a copy of such comments to the petitioner.

(c) *Responsive statement by the petitioner*. A petitioner may, within 10 working days of receipt of a copy of any comments submitted in accordance with paragraph (b) of this section, respond to such comments in a written statement submitted to the Assistant Secretary for Energy Efficiency and Renewable Energy. A petitioner may address more than one set of comments in a single responsive statement.

(d) *Public announcement of interim determination and solicitation of comments*. The Assistant Secretary for Energy Efficiency and Renewable Energy shall issue an interim determination on the Petition as soon as is practicable following receipt and review of the Petition and other applicable documents, including, but not limited to, comments and responses to comments. The petitioner shall be notified in writing of the interim determination. DOE shall also publish in the FEDERAL REGISTER the interim determination and

shall solicit comments, data and information with respect to that interim determination. Written comments and responsive statements may be submitted as provided in paragraphs (b) and (c) of this section.

(e) *Public announcement of final determination.* The Assistant Secretary for Energy Efficiency and Renewable Energy shall, as soon as practicable, following receipt and review of comments and responsive statements on the interim determination publish in the FEDERAL REGISTER a notice of final determination on the Petition.

(f) *Additional information.* The Department may, at any time during the recognition process, request additional relevant information or conduct an investigation concerning the Petition. The Department's determination on a Petition may be based solely on the Petition and supporting documents, or may also be based on such additional information as the Department deems appropriate.

(g) *Withdrawal of recognition*—(1) *Withdrawal by the Department.* If the Department believes that a certification program that has been recognized under § 431.447 is failing to meet the criteria of paragraph (b) of the section under which it is recognized, the Department will so advise such entity and request that it take appropriate corrective action. The Department will give the entity an opportunity to respond. If after receiving such response, or no response, the Department believes satisfactory corrective action has not been made, the Department will withdraw its recognition from that entity.

(2) *Voluntary withdrawal.* A certification program may withdraw itself from recognition by the Department by advising the Department in writing of such withdrawal. It must also advise those that use it (for a certification organization, the manufacturers) of such withdrawal.

(3) *Notice of withdrawal of recognition.* The Department will publish in the FEDERAL REGISTER a notice of any withdrawal of recognition that occurs pursuant to this paragraph (g).

[77 FR 26639, May 4, 2012]

PART 433—ENERGY EFFICIENCY STANDARDS FOR THE DESIGN AND CONSTRUCTION OF NEW FEDERAL COMMERCIAL AND MULTI-FAMILY HIGH-RISE RESIDENTIAL BUILDINGS

Sec.

433.1 Purpose and scope.
433.2 Definitions.
433.3 Materials incorporated by reference.
433.4–433.7 [Reserved]
433.8 Life-cycle costing.

Subpart A—Energy Efficiency Performance

433.100 Energy efficiency performance standard.
433.101 Performance level determination.

Subpart B—Reduction in Fossil Fuel-Generated Energy Consumption [Reserved]

Subpart C—Green Building Certification for Federal Buildings

433.300 Green building certification.

AUTHORITY: 42 U.S.C. 6831–6832, 6834–6835; 42 U.S.C. 7101 *et seq.*

SOURCE: 71 FR 70281, Dec. 4, 2006, unless otherwise noted.

§ 433.1 Purpose and scope.

(a) This part establishes an energy efficiency performance standard for the new Federal commercial and multi-family high-rise buildings, for which design for construction began on or after January 3, 2007, as required by section 305(a) of the Energy Conservation and Production Act, as amended (42 U.S.C. 6834(a)).

(b) [Reserved]

(c) This part also establishes green building certification requirements for new Federal buildings that are commercial and multi-family high-rise residential buildings and major renovations to Federal buildings that are commercial and multi-family high-rise residential buildings, for which design for construction began on or after October 14, 2015.

[71 FR 70281, Dec. 4, 2006, as amended at 79 FR 61569, Oct. 14, 2014]