AUTHENTICATED
U.S. GOVERNMENT
INFORMATION
GPO

APPENDIX A TO SUBPART V OF PART 572—FIGURES

FIGURE V1
NECK ATTACHED TO HEADFORM ASSEMBLY

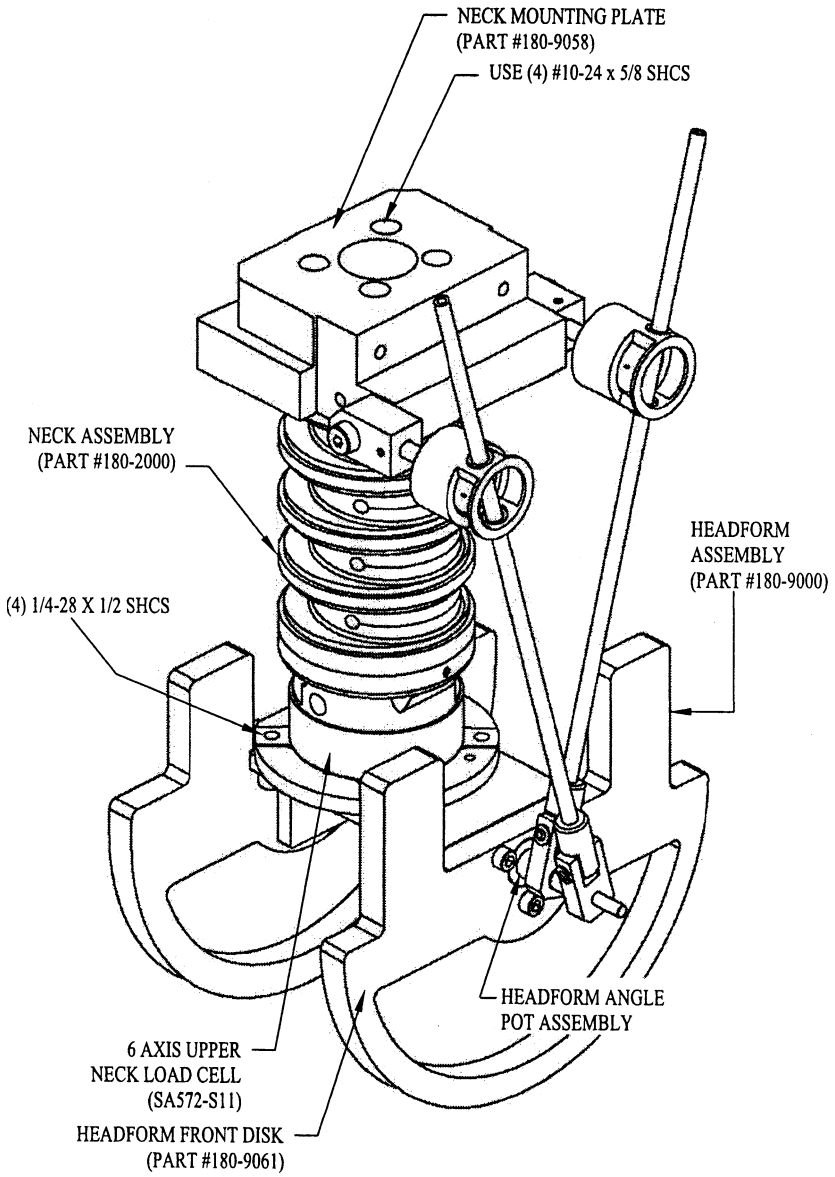

FIGURE V2-A
NECK/HEADFORM ATTACHED TO PENDULUM FOR LEFT-SIDE IMPACT

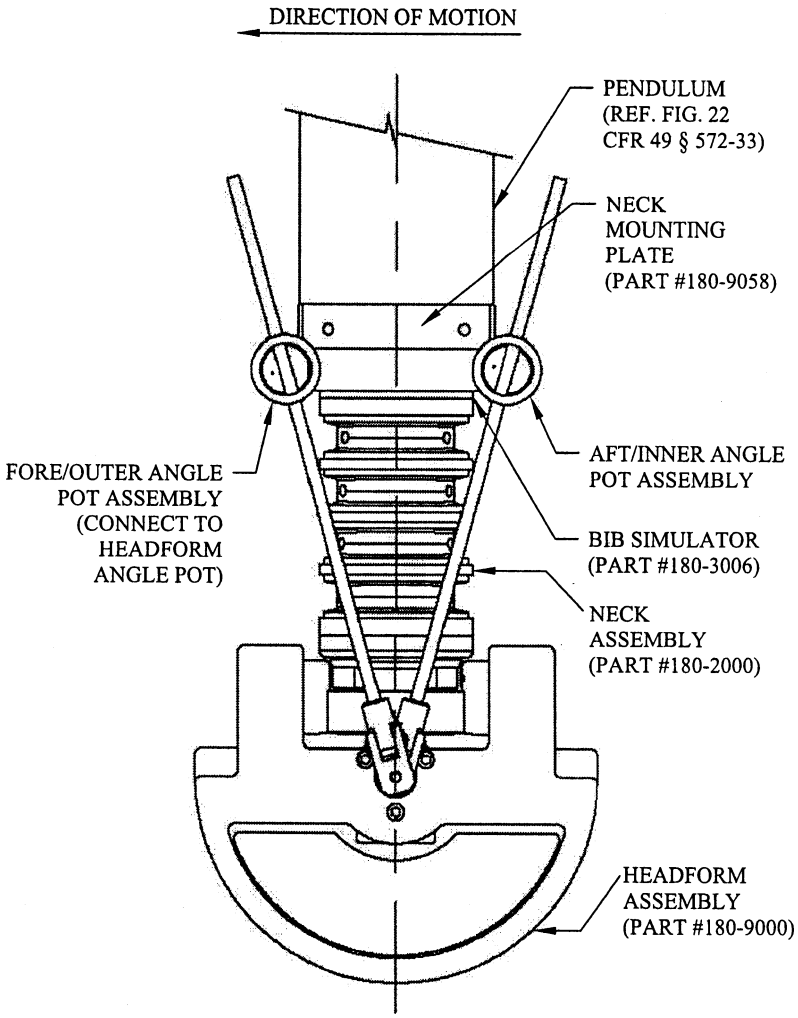

FIGURE V2-B
NECK/HEADFORM ATTACHED TO PENDULUM FOR RIGHT-SIDE IMPACT

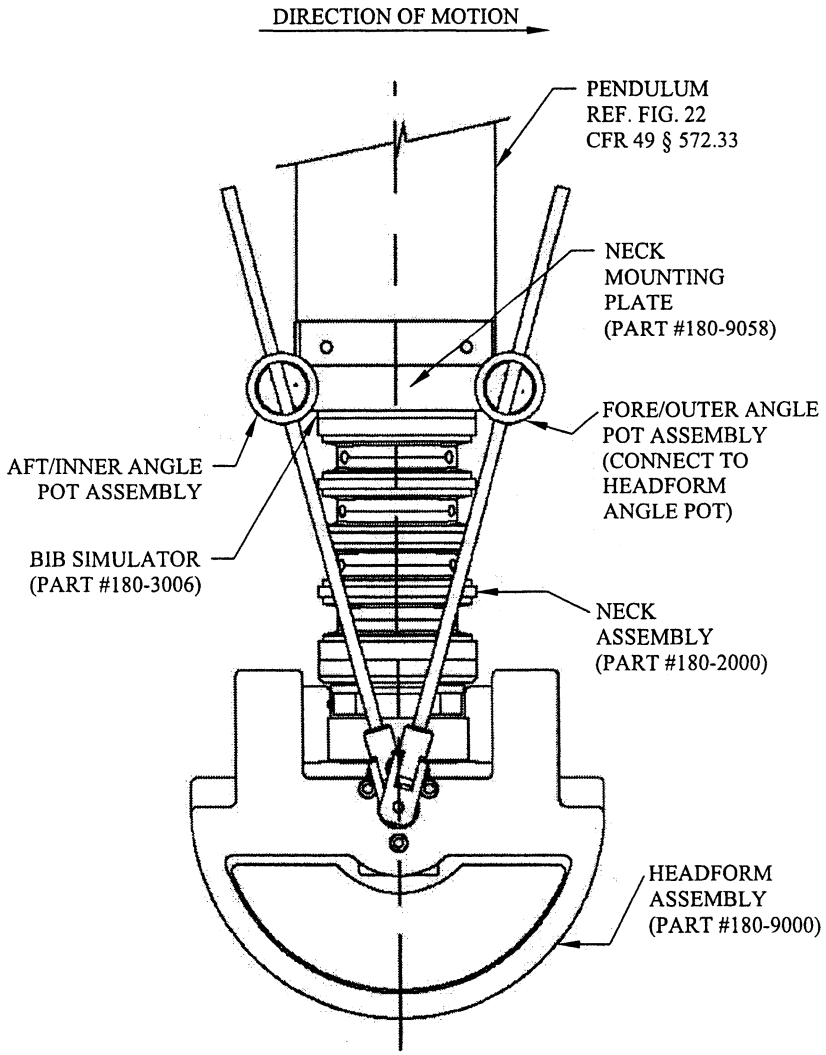

FIGURE V2-C
ANGLE MEASUREMENT WITH HEADFORM SET-UP

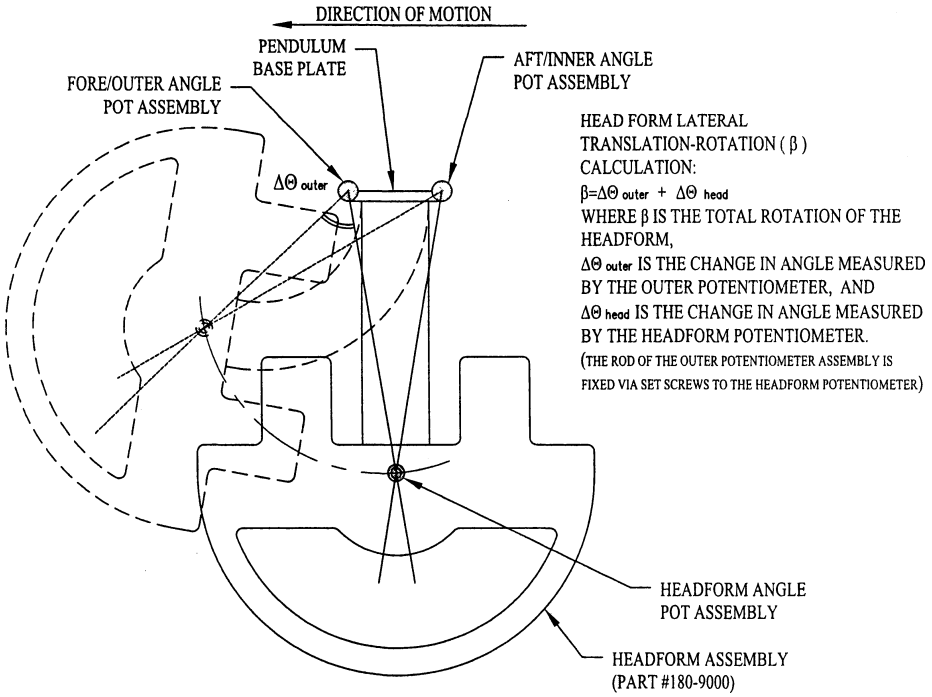

FIGURE V3
CERTIFICATION BENCH

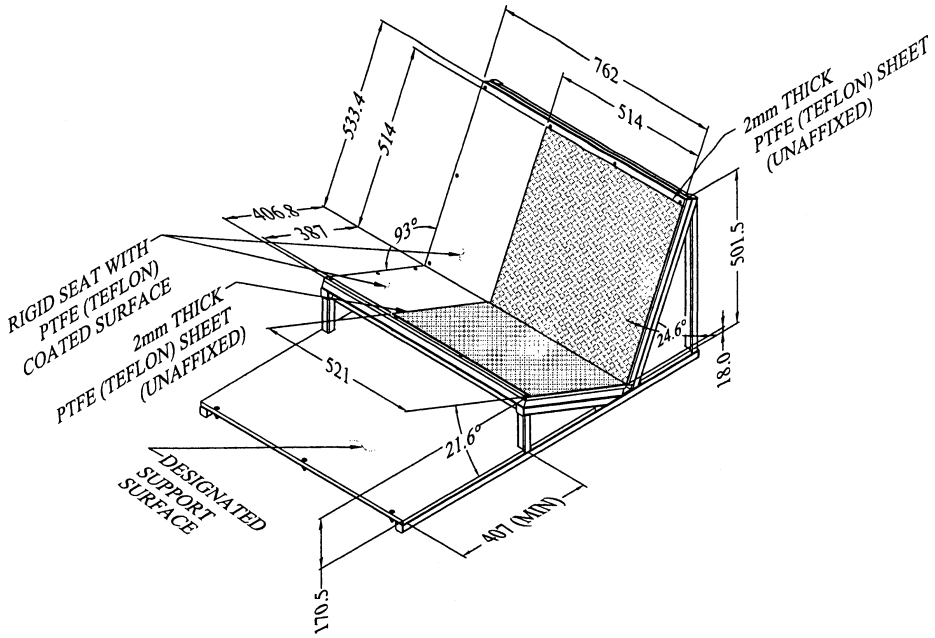

FIGURE V4-A
SHOULDER IMPACT

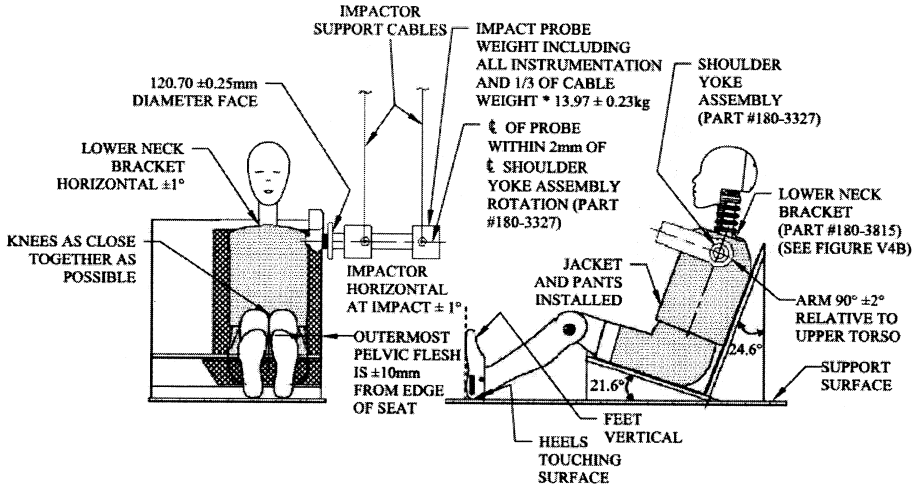

* 1/3 OF CABLE WEIGHT NOT TO EXCEED 5% OF THE TOTAL IMPACTOR PROBE WEIGHT

FIGURE V4-B
SHOULDER IMPACT
(NON-IMPACT SIDE VIEW)

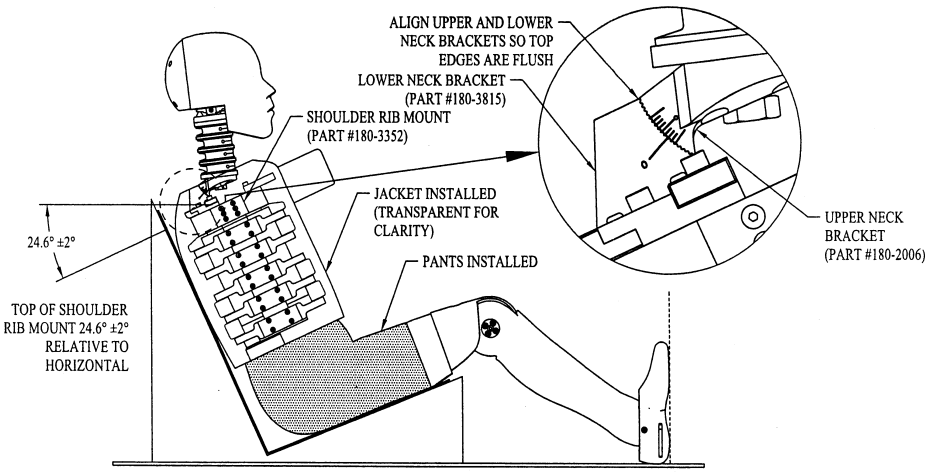

FIGURE V5-A
THORAX WITH ARM IMPACT

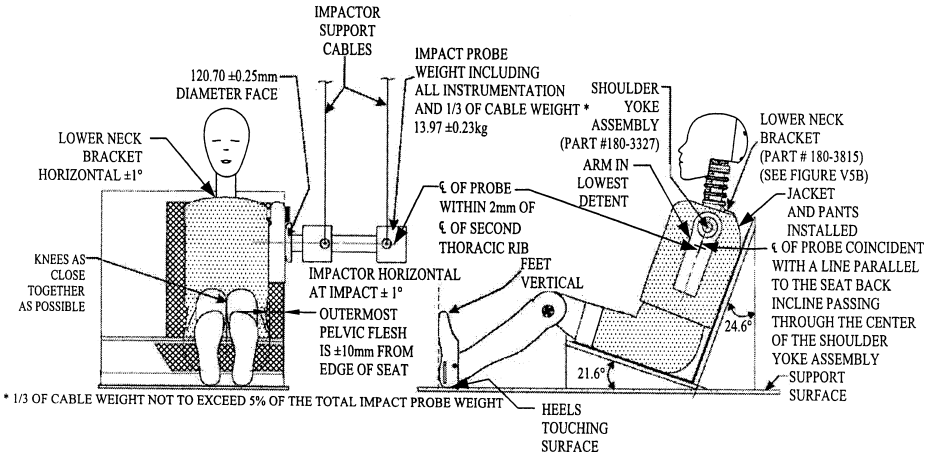

FIGURE V5-B
THORAX WITH ARM IMPACT
(NON-IMPACT SIDE VIEW)

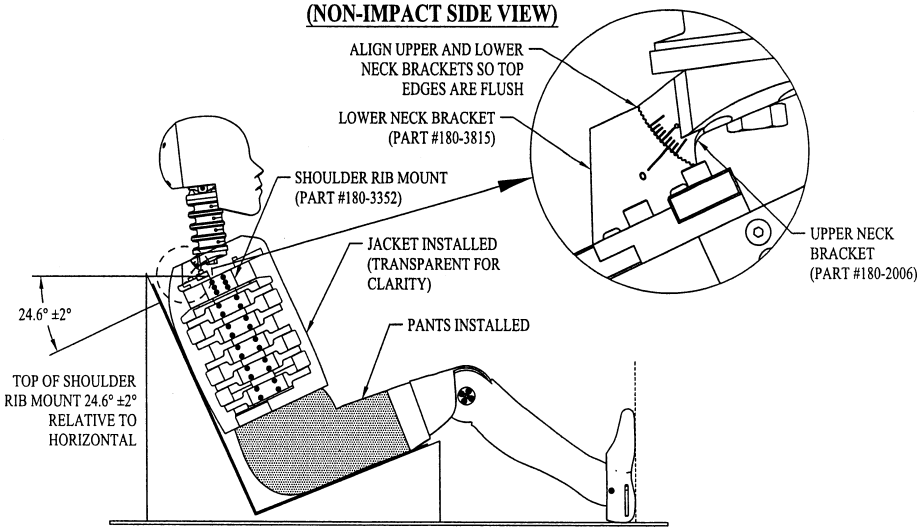

FIGURE V6-A
THORAX WITHOUT ARM IMPACT

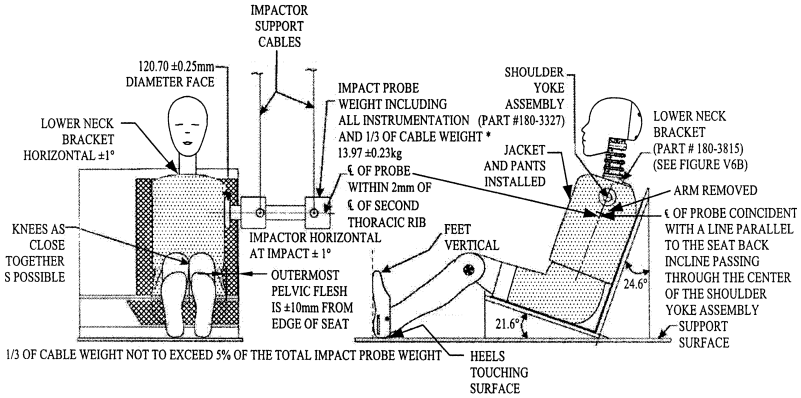

FIGURE V6-B
THORAX WITHOUT ARM IMPACT
(NON-IMPACT SIDE VIEW)

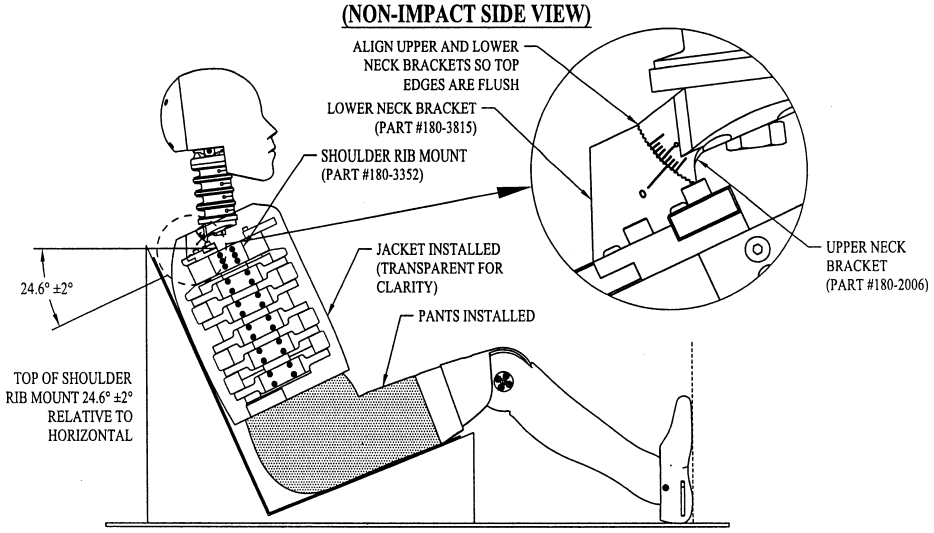

FIGURE V7-A
ABDOMEN IMPACT

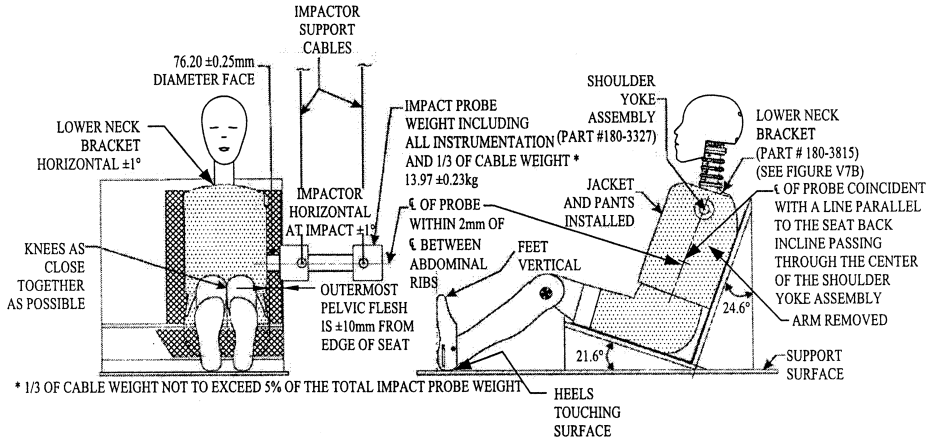

FIGURE V7-B
ABDOMEN IMPACT
(NON-IMPACT SIDE VIEW)

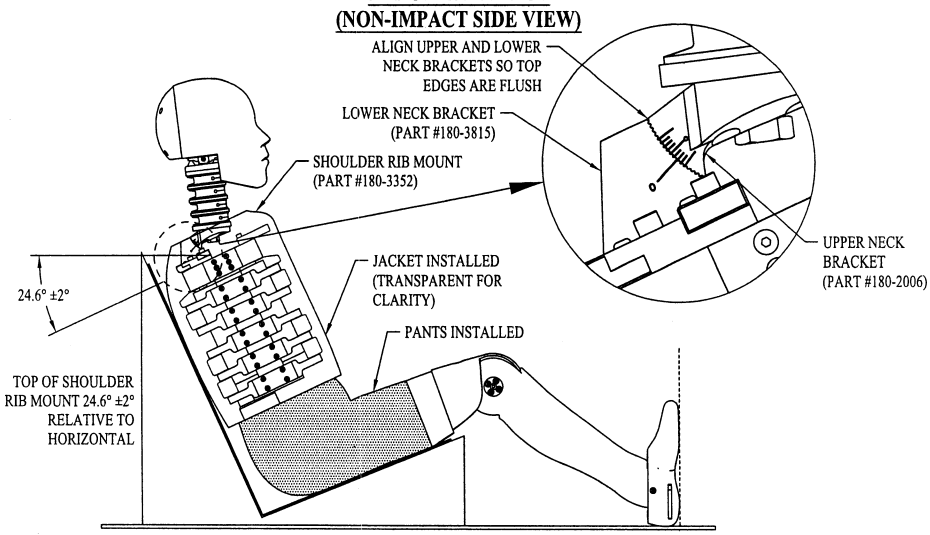

FIGURE V8-A
ACETABULUM IMPACT

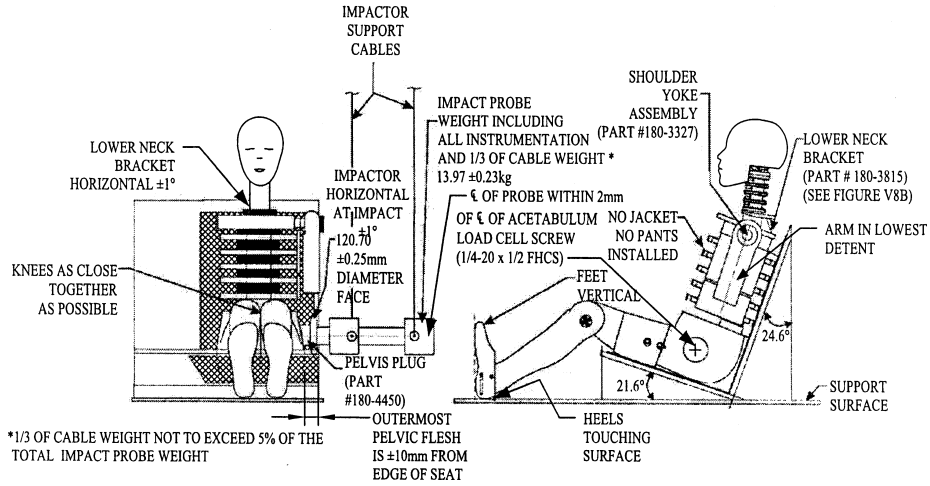

FIGURE V8-B
ACETABULUM IMPACT
(NON-IMPACT SIDE VIEW)

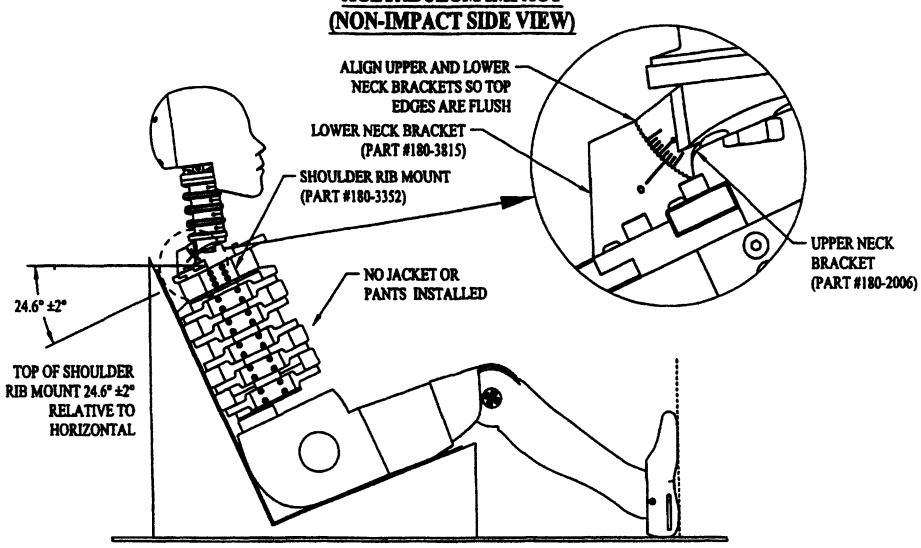

FIGURE V9-A
ILIAC IMPACT

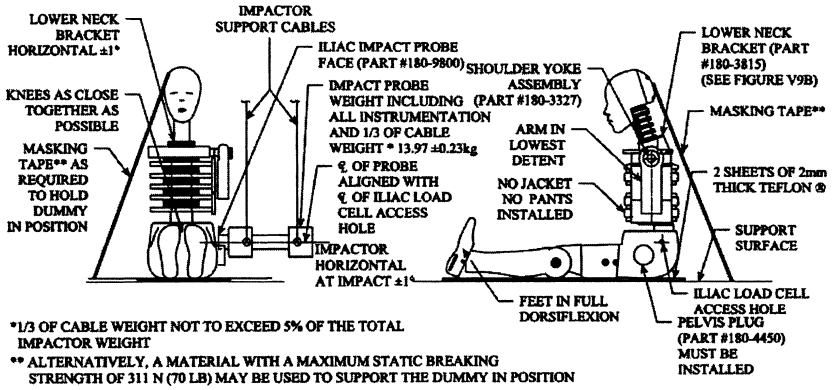

*1/3 OF CABLE WEIGHT NOT TO EXCEED 5% OF THE TOTAL IMPACTOR WEIGHT

** ALTERNATIVELY, A MATERIAL WITH A MAXIMUM STATIC BREAKING STRENGTH OF 311 N (70 LB) MAY BE USED TO SUPPORT THE DUMMY IN POSITION

FIGURE V9-B
ILIAC IMPACT
(NON-IMPACT SIDE VIEW)

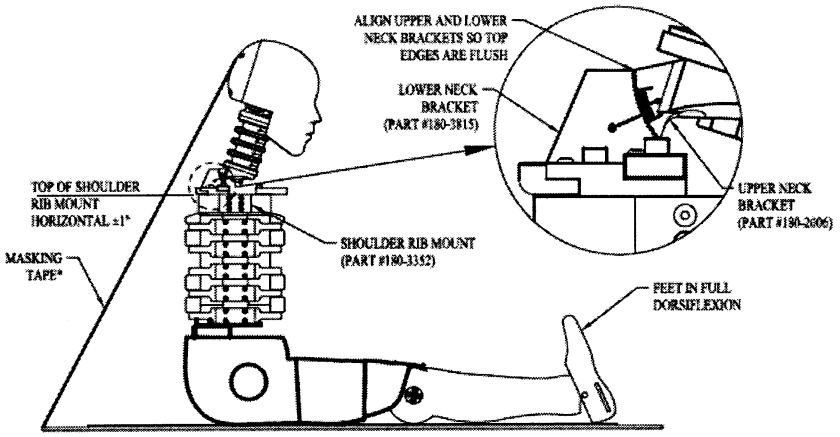

* ALTERNATIVELY, A MATERIAL WITH A MAXIMUM STATIC BREAKING STRENGTH OF 311 N (70 LB) MAY BE USED TO SUPPORT THE DUMMY IN POSITION

[71 FR 75370, Dec. 14, 2006, as amended at 74 FR 29896, June 23, 2009]

PART 573—DEFECT AND NONCOMPLIANCE RESPONSIBILITY AND REPORTS

Sec.

573.1 Scope.
573.2 Purpose.
573.3 Application.
573.4 Definitions.
573.5 Defect and noncompliance responsibility.
573.6 Defect and noncompliance information report.
573.7 Quarterly reports.
573.8 Lists of purchasers, owners, dealers, distributors, lessors and lessees.
573.9 Address for submitting required reports and other information.
573.10 Reporting the sale or lease of defective or noncompliant tires.
573.11 Prohibition on sale or lease of new defective and noncompliant motor vehicles and items of replacement equipment.
573.12 Prohibition on sale or lease of new and used defective and noncompliant motor vehicle equipment.
573.13 Reimbursement for prenotification remedies.
573.14 Accelerated remedy program.
573.15 Public availability of motor vehicle recall information.
573.16 Reporting bankruptcy petition.

AUTHORITY: 49 U.S.C. 30102, 30103, 30116–30121, 30166, Pub. L. 112–141, 126 Stat. 405; delegation of authority at 49 CFR 1.95 and 49 CFR 501.8.

SOURCE: 43 FR 60169, Dec. 26, 1978, unless otherwise noted.

§ 573.1 Scope.

This part:

(a) Sets forth the responsibilities under 49 U.S.C. 30116–30121 of manufacturers of motor vehicles and motor vehicle equipment with respect to safety-related defects and noncompliances with Federal motor vehicle safety standards in motor vehicles and items of motor vehicle equipment; and

(b) Specifies requirements for—

(1) Manufacturers to maintain lists of owners, purchasers, dealers, and distributors notified of defective and noncomplying motor vehicles and motor vehicle original and replacement equipment,

(2) Reporting to the National Highway Traffic Safety Administration (NHTSA) defects in motor vehicles and motor vehicle equipment and noncompliances with motor vehicle safety standards prescribed under part 571 of this chapter, and