AUTHENTICATED
U.S. GOVERNMENT
INFORMATION
GPO

§ 1910.1052 Methylene Chloride.

This occupational health standard establishes requirements for employers to control occupational exposure to methylene chloride (MC). Employees exposed to MC are at increased risk of developing cancer, adverse effects on the heart, central nervous system and liver, and skin or eye irritation. Exposure may occur through inhalation, by absorption through the skin, or through contact with the skin. MC is a solvent which is used in many different types of work activities, such as paint stripping, polyurethane foam manufacturing, and cleaning and degreasing. Under the requirements of paragraph (d) of this section, each covered employer must make an initial determination of each employee's exposure to MC. If the employer determines that employees are exposed below the action level, the only other provisions of this section that apply are that a record must be made of the determination, the employees must receive information and training under paragraph (l) of this section and, where appropriate, employees must be protected from contact with liquid MC under paragraph (h) of this section. The provisions of the MC standard are as follows:

(a) *Scope and application*. This section applies to all occupational exposures to methylene chloride (MC), Chemical Abstracts Service Registry Number 75–09–2, in general industry, construction and shipyard employment.

(b) *Definitions*. For the purposes of this section, the following definitions shall apply:

Action level means a concentration of airborne MC of 12.5 parts per million (ppm) calculated as an eight (8)-hour time-weighted average (TWA).

Assistant Secretary means the Assistant Secretary of Labor for Occupational Safety and Health, U.S. Department of Labor, or designee.

Authorized person means any person specifically authorized by the employer and required by work duties to be present in regulated areas, or any person entering such an area as a designated representative of employees for the purpose of exercising the right to observe monitoring and measuring procedures under paragraph (d) of this section, or any other person authorized by the OSH Act or regulations issued under the Act.

Director means the Director of the National Institute for Occupational Safety and Health, U.S. Department of Health and Human Services, or designee.

Emergency means any occurrence, such as, but not limited to, equipment failure, rupture of containers, or failure of control equipment, which results, or is likely to result in an uncontrolled release of MC. If an incidental release of MC can be controlled by employees such as maintenance personnel at the time of release and in accordance with the leak/spill provisions required by paragraph (f) of this section, it is not considered an emergency as defined by this standard.

Employee exposure means exposure to airborne MC which occurs or would occur if the employee were not using respiratory protection.

Methylene chloride (MC) means an organic compound with chemical formula, $CH_2 Cl_2$. Its Chemical Abstracts Service Registry Number is 75–09–2. Its molecular weight is 84.9 g/mole.

Physician or other licensed health care professional is an individual whose legally permitted scope of practice (i.e., license, registration, or certification) allows him or her to independently provide or be delegated the responsibility to provide some or all of the health care services required by paragraph (j) of this section.

Regulated area means an area, demarcated by the employer, where an employee's exposure to airborne concentrations of MC exceeds or can reasonably be expected to exceed either the 8-hour TWA PEL or the STEL.

Symptom means central nervous system effects such as headaches, disorientation, dizziness, fatigue, and decreased attention span; skin effects such as chapping, erythema, cracked skin, or skin burns; and cardiac effects such as chest pain or shortness of breath.

This section means this methylene chloride standard.

(c) *Permissible exposure limits (PELs)*—(1) *Eight-hour time-weighted average (TWA) PEL*. The employer shall ensure

that no employee is exposed to an airborne concentration of MC in excess of twenty-five parts of MC per million parts of air (25 ppm) as an 8-hour TWA.

(2) *Short-term exposure limit (STEL).* The employer shall ensure that no employee is exposed to an airborne concentration of MC in excess of one hundred and twenty-five parts of MC per million parts of air (125 ppm) as determined over a sampling period of fifteen minutes.

(d) *Exposure monitoring*—(1) *Characterization of employee exposure.* (i) Where MC is present in the workplace, the employer shall determine each employee's exposure by either:

(A) Taking a personal breathing zone air sample of each employee's exposure; or

(B) Taking personal breathing zone air samples that are representative of each employee's exposure.

(ii) *Representative samples.* The employer may consider personal breathing zone air samples to be representative of employee exposures when they are taken as follows:

(A) *8-hour TWA PEL.* The employer has taken one or more personal breathing zone air samples for at least one employee in each job classification in a work area during every work shift, and the employee sampled is expected to have the highest MC exposure.

(B) *Short-term exposure limits.* The employer has taken one or more personal breathing zone air samples which indicate the highest likely 15-minute exposures during such operations for at least one employee in each job classification in the work area during every work shift, and the employee sampled is expected to have the highest MC exposure.

(C) *Exception.* Personal breathing zone air samples taken during one work shift may be used to represent employee exposures on other work shifts where the employer can document that the tasks performed and conditions in the workplace are similar across shifts.

(iii) *Accuracy of monitoring.* The employer shall ensure that the methods used to perform exposure monitoring produce results that are accurate to a confidence level of 95 percent, and are:

(A) Within plus or minus 25 percent for airborne concentrations of MC above the 8-hour TWA PEL or the STEL; or

(B) Within plus or minus 35 percent for airborne concentrations of MC at or above the action level but at or below the 8-hour TWA PEL.

(2) *Initial determination.* Each employer whose employees are exposed to MC shall perform initial exposure monitoring to determine each affected employee's exposure, except under the following conditions:

(i) Where objective data demonstrate that MC cannot be released in the workplace in airborne concentrations at or above the action level or above the STEL. The objective data shall represent the highest MC exposures likely to occur under reasonably foreseeable conditions of processing, use, or handling. The employer shall document the objective data exemption as specified in paragraph (m) of this section;

(ii) Where the employer has performed exposure monitoring within 12 months prior to April 10, 1997 and that exposure monitoring meets all other requirements of this section, and was conducted under conditions substantially equivalent to existing conditions; or

(iii) Where employees are exposed to MC on fewer than 30 days per year (e.g., on a construction site), and the employer has measurements by direct-reading instruments which give immediate results (such as a detector tube) and which provide sufficient information regarding employee exposures to determine what control measures are necessary to reduce exposures to acceptable levels.

(3) *Periodic monitoring.* Where the initial determination shows employee exposures at or above the action level or above the STEL, the employer shall establish an exposure monitoring program for periodic monitoring of employee exposure to MC in accordance with Table 1:

TABLE 1—INITIAL DETERMINATION EXPOSURE SCENARIOS AND THEIR ASSOCIATED MONITORING FREQUENCIES

Exposure scenario	Required monitoring activity
Below the action level and at or below the STEL.	No 8-hour TWA or STEL monitoring required.
Below the action level and above the STEL	No 8-hour TWA monitoring required; monitor STEL exposures every three months.
At or above the action level, at or below the TWA, and at or below the STEL.	Monitor 8-hour TWA exposures every six months.
At or above the action level, at or below the TWA, and above the STEL.	Monitor 8-hour TWA exposures every six months and monitor STEL exposures every three months.
Above the TWA and at or below the STEL	Monitor 8-hour TWA exposures every three months. In addition, without regard to the last sentence of the note to paragraph (d)(3), the following employers must monitor STEL exposures every three months until either the date by which they must achieve the 8-hour TWA PEL under paragraph (n) of this section or the date by which they in fact achieve the 8-hour TWA PEL, whichever comes first: employers engaged in polyurethane foam manufacturing; foam fabrication; furniture refinishing; general aviation aircraft stripping; product formulation; use of MC-based adhesives for boat building and repair, recreational vehicle manufacture, van conversion, or upholstery; and use of MC in construction work for restoration and preservation of buildings, painting and paint removal, cabinet making, or floor refinishing and resurfacing.
Above the TWA and above the STEL	Monitor 8-hour TWA exposures and STEL exposures every three months.

[NOTE TO PARAGRAPH (d)(3): The employer may decrease the frequency of 8-hour TWA exposure monitoring to every six months when at least two consecutive measurements taken at least seven days apart show exposures to be at or below the 8-hour TWA PEL. The employer may discontinue the periodic 8-hour TWA monitoring for employees where at least two consecutive measurements taken at least seven days apart are below the action level. The employer may discontinue the periodic STEL monitoring for employees where at least two consecutive measurements taken at least 7 days apart are at or below the STEL.]

(4) *Additional monitoring.* (i) The employer shall perform exposure monitoring when a change in workplace conditions indicates that employee exposure may have increased. Examples of situations that may require additional monitoring include changes in production, process, control equipment, or work practices, or a leak, rupture, or other breakdown.

(ii) Where exposure monitoring is performed due to a spill, leak, rupture or equipment breakdown, the employer shall clean-up the MC and perform the appropriate repairs before monitoring.

(5) *Employee notification of monitoring results.* (i) The employer shall, within 15 working days after the receipt of the results of any monitoring performed under this section, notify each affected employee of these results in writing, either individually or by posting of results in an appropriate location that is accessible to affected employees.

(ii) Whenever monitoring results indicate that employee exposure is above the 8-hour TWA PEL or the STEL, the employer shall describe in the written notification the corrective action being taken to reduce employee exposure to or below the 8-hour TWA PEL or STEL and the schedule for completion of this action.

(6) *Observation of monitoring*—(i) *Employee observation.* The employer shall provide affected employees or their designated representatives an opportunity to observe any monitoring of employee exposure to MC conducted in accordance with this section.

(ii) *Observation procedures.* When observation of the monitoring of employee exposure to MC requires entry into an area where the use of protective clothing or equipment is required, the employer shall provide, at no cost to the observer(s), and the observer(s) shall be required to use such clothing and equipment and shall comply with all other applicable safety and health procedures.

(e) *Regulated areas.* (1) The employer shall establish a regulated area wherever an employee's exposure to airborne concentrations of MC exceeds or can reasonably be expected to exceed either the 8-hour TWA PEL or the STEL.

(2) The employer shall limit access to regulated areas to authorized persons.

(3) The employer shall supply a respirator, selected in accordance with

paragraph (h)(3) of this section, to each person who enters a regulated area and shall require each affected employee to use that respirator whenever MC exposures are likely to exceed the 8-hour TWA PEL or STEL.

[NOTE TO PARAGRAPH (e)(3): An employer who has implemented all feasible engineering, work practice and administrative controls (as required in paragraph (f) of this section), and who has established a regulated area (as required by paragraph (e)(1) of this section) where MC exposure can be reliably predicted to exceed the 8-hour TWA PEL or the STEL only on certain days (for example, because of work or process schedule) would need to have affected employees use respirators in that regulated area only on those days.]

(4) The employer shall ensure that, within a regulated area, employees do not engage in non-work activities which may increase dermal or oral MC exposure.

(5) The employer shall ensure that while employees are wearing respirators, they do not engage in activities (such as taking medication or chewing gum or tobacco) which interfere with respirator seal or performance.

(6) The employer shall demarcate regulated areas from the rest of the workplace in any manner that adequately establishes and alerts employees to the boundaries of the area and minimizes the number of authorized employees exposed to MC within the regulated area.

(7) An employer at a multi-employer worksite who establishes a regulated area shall communicate the access restrictions and locations of these areas to all other employers with work operations at that worksite.

(f) *Methods of compliance*—(1) *Engineering and work practice controls.* The employer shall institute and maintain the effectiveness of engineering controls and work practices to reduce employee exposure to or below the PELs except to the extent that the employer can demonstrate that such controls are not feasible. Wherever the feasible engineering controls and work practices which can be instituted are not sufficient to reduce employee exposure to or below the 8–TWA PEL or STEL, the employer shall use them to reduce employee exposure to the lowest levels achievable by these controls and shall supplement them by the use of respiratory protection that complies with the requirements of paragraph (g) of this section.

(2) *Prohibition of rotation.* The employer shall not implement a schedule of employee rotation as a means of compliance with the PELs.

(3) *Leak and spill detection.* (i) The employer shall implement procedures to detect leaks of MC in the workplace. In work areas where spills may occur, the employer shall make provisions to contain any spills and to safely dispose of any MC-contaminated waste materials.

(ii) The employer shall ensure that all incidental leaks are repaired and that incidental spills are cleaned promptly by employees who use the appropriate personal protective equipment and are trained in proper methods of cleanup.

[NOTE TO PARAGRAPH (f)(3)(ii): See appendix A of this section for examples of procedures that satisfy this requirement. Employers covered by this standard may also be subject to the hazardous waste and emergency response provisions contained in 29 CFR 1910.120 (q).]

(g) *Respiratory protection*—(1) *General.* For employees who use respirators required by this section, the employer must provide each employee an appropriate respirator that complies with the requirements of this paragraph. Respirators must be used during:

(i) Periods when an employee's exposure to MC exceeds the 8-hour TWA PEL, or STEL (for example, when an employee is using MC in a regulated area).

(ii) Periods necessary to install or implement feasible engineering and work-practice controls.

(iii) A few work operations, such as some maintenance operations and repair activities, for which the employer demonstrates that engineering and work-practice controls are infeasible.

(iv) Work operations for which feasible engineering and work-practice controls are not sufficient to reduce employee exposures to or below the PELs.

(v) Emergencies.

(2) *Respirator program.* (i) The employer must implement a respiratory protection program in accordance with

§ 1910.13(b) through (m) (except (d)(1)(iii)), which covers each employee required by this section to use a respirator.

(ii) Employers who provide employees with gas masks with organic-vapor canisters for the purpose of emergency escape must replace the canisters after any emergency use and before the gas masks are returned to service.

(3) *Respirator selection.* Employers must:

(i) Select, and provide to employees, the appropriate atmosphere-supplying respirator specified in paragraph (d)(3)(i)(A) of 29 CFR 1910.134; however, employers must not select or use half masks of any type because MC may cause eye irritation or damage.

(ii) For emergency escape, provide employees with one of the following respirator options: A self-contained breathing apparatus operated in the continuous-flow or pressure-demand mode; or a gas mask with an organic vapor canister.

(4) *Medical evaluation.* Before having an employee use a supplied-air respirator in the negative-pressure mode, or a gas mask with an organic-vapor canister for emergency escape, the employer must:

(i) Have a physician or other licensed health-care professional (PLHCP) evaluate the employee's ability to use such respiratory protection.

(ii) Ensure that the PLHCP provides their findings in a written opinion to the employee and the employer.

(h) *Protective Work Clothing and Equipment.* (1) Where needed to prevent MC-induced skin or eye irritation, the employer shall provide clean protective clothing and equipment which is resistant to MC, at no cost to the employee, and shall ensure that each affected employee uses it. Eye and face protection shall meet the requirements of 29 CFR 1910.133 or 29 CFR 1915.153, as applicable.

(2) The employer shall clean, launder, repair and replace all protective clothing and equipment required by this paragraph as needed to maintain their effectiveness.

(3) The employer shall be responsible for the safe disposal of such clothing and equipment.

[NOTE TO PARAGRAPH (h)(4): See appendix A for examples of disposal procedures that will satisfy this requirement.]

(i) *Hygiene facilities.* (1) If it is reasonably foreseeable that employees' skin may contact solutions containing 0.1 percent or greater MC (for example, through splashes, spills or improper work practices), the employer shall provide conveniently located washing facilities capable of removing the MC, and shall ensure that affected employees use these facilities as needed.

(2) If it is reasonably foreseeable that an employee's eyes may contact solutions containing 0.1 percent or greater MC (for example through splashes, spills or improper work practices), the employer shall provide appropriate eyewash facilities within the immediate work area for emergency use, and shall ensure that affected employees use those facilities when necessary.

(j) *Medical surveillance*—(1) *Affected employees.* The employer shall make medical surveillance available for employees who are or may be exposed to MC as follows:

(i) At or above the action level on 30 or more days per year, or above the 8-hour TWA PEL or the STEL on 10 or more days per year;

(ii) Above the 8–TWA PEL or STEL for any time period where an employee has been identified by a physician or other licensed health care professional as being at risk from cardiac disease or from some other serious MC-related health condition and such employee requests inclusion in the medical surveillance program;

(iii) During an emergency.

(2) *Costs.* The employer shall provide all required medical surveillance at no cost to affected employees, without loss of pay and at a reasonable time and place.

(3) *Medical personnel.* The employer shall ensure that all medical surveillance procedures are performed by a physician or other licensed health care professional, as defined in paragraph (b) of this section.

(4) *Frequency of medical surveillance.* The employer shall make medical surveillance available to each affected employee as follows:

(i) *Initial surveillance*. The employer shall provide initial medical surveillance under the schedule provided by paragraph (n)(2)(iii) of this section, or before the time of initial assignment of the employee, whichever is later. The employer need not provide the initial surveillance if medical records show that an affected employee has been provided with medical surveillance that complies with this section within 12 months before April 10, 1997.

(ii) *Periodic medical surveillance*. The employer shall update the medical and work history for each affected employee annually. The employer shall provide periodic physical examinations, including appropriate laboratory surveillance, as follows:

(A) For employees 45 years of age or older, within 12 months of the initial surveillance or any subsequent medical surveillance; and

(B) For employees younger than 45 years of age, within 36 months of the initial surveillance or any subsequent medical surveillance.

(iii) *Termination of employment or reassignment*. When an employee leaves the employer's workplace, or is reassigned to an area where exposure to MC is consistently at or below the action level and STEL, medical surveillance shall be made available if six months or more have elapsed since the last medical surveillance.

(iv) *Additional surveillance*. The employer shall provide additional medical surveillance at frequencies other than those listed above when recommended in the written medical opinion. (For example, the physician or other licensed health care professional may determine an examination is warranted in less than 36 months for employees younger than 45 years of age based upon evaluation of the results of the annual medical and work history.)

(5) *Content of medical surveillance*—(i) *Medical and work history*. The comprehensive medical and work history shall emphasize neurological symptoms, skin conditions, history of hematologic or liver disease, signs or symptoms suggestive of heart disease (angina, coronary artery disease), risk factors for cardiac disease, MC exposures, and work practices and personal protective equipment used during such exposures.

[NOTE TO PARAGRAPH (j)(5)(i): See appendix B of this section for an example of a medical and work history format that would satisfy this requirement.]

(ii) *Physical examination*. Where physical examinations are provided as required above, the physician or other licensed health care professional shall accord particular attention to the lungs, cardiovascular system (including blood pressure and pulse), liver, nervous system, and skin. The physician or other licensed health care professional shall determine the extent and nature of the physical examination based on the health status of the employee and analysis of the medical and work history.

(iii) *Laboratory surveillance*. The physician or other licensed health care professional shall determine the extent of any required laboratory surveillance based on the employee's observed health status and the medical and work history.

[NOTE TO PARAGRAPH (j)(5)(iii): See appendix B of this section for information regarding medical tests. Laboratory surveillance may include before- and after-shift carboxyhemoglobin determinations, resting ECG, hematocrit, liver function tests and cholesterol levels.]

(iv) *Other information or reports*. The medical surveillance shall also include any other information or reports the physician or other licensed health care professional determines are necessary to assess the employee's health in relation to MC exposure.

(6) *Content of emergency medical surveillance*. The employer shall ensure that medical surveillance made available when an employee has been exposed to MC in emergency situations includes, at a minimum:

(i) Appropriate emergency treatment and decontamination of the exposed employee;

(ii) Comprehensive physical examination with special emphasis on the nervous system, cardiovascular system, lungs, liver and skin, including blood pressure and pulse;

(iii) Updated medical and work history, as appropriate for the medical condition of the employee; and

(iv) Laboratory surveillance, as indicated by the employee's health status.

[NOTE TO PARAGRAPH (j)(6)(iv): See appendix B for examples of tests which may be appropriate.]

(7) *Additional examinations and referrals.* Where the physician or other licensed health care professional determines it is necessary, the scope of the medical examination shall be expanded and the appropriate additional medical surveillance, such as referrals for consultation or examination, shall be provided.

(8) *Information provided to the physician or other licensed health care professional.* The employer shall provide the following information to a physician or other licensed health care professional who is involved in the diagnosis of MC-induced health effects:

(i) A copy of this section including its applicable appendices;

(ii) A description of the affected employee's past, current and anticipated future duties as they relate to the employee's MC exposure;

(iii) The employee's former or current exposure levels or, for employees not yet occupationally exposed to MC, the employee's anticipated exposure levels and the frequency and exposure levels anticipated to be associated with emergencies;

(iv) A description of any personal protective equipment, such as respirators, used or to be used; and

(v) Information from previous employment-related medical surveillance of the affected employee which is not otherwise available to the physician or other licensed health care professional.

(9) *Written medical opinions.* (i) For each physical examination required by this section, the employer shall ensure that the physician or other licensed health care professional provides to the employer and to the affected employee a written opinion regarding the results of that examination within 15 days of completion of the evaluation of medical and laboratory findings, but not more than 30 days after the examination. The written medical opinion shall be limited to the following information:

(A) The physician or other licensed health care professional's opinion concerning whether exposure to MC may contribute to or aggravate the employee's existing cardiac, hepatic, neurological (including stroke) or dermal disease or whether the employee has any other medical condition(s) that would place the employee's health at increased risk of material impairment from exposure to MC.

(B) Any recommended limitations upon the employee's exposure to MC, including removal from MC exposure, or upon the employee's use of respirators, protective clothing, or other protective equipment.

(C) A statement that the employee has been informed by the physician or other licensed health care professional that MC is a potential occupational carcinogen, of risk factors for heart disease, and the potential for exacerbation of underlying heart disease by exposure to MC through its metabolism to carbon monoxide; and

(D) A statement that the employee has been informed by the physician or other licensed health care professional of the results of the medical examination and any medical conditions resulting from MC exposure which require further explanation or treatment.

(ii) The employer shall instruct the physician or other licensed health care professional not to reveal to the employer, orally or in the written opinion, any specific records, findings, and diagnoses that have no bearing on occupational exposure to MC.

[NOTE TO PARAGRAPH (j)(9)(ii): The written medical opinion may also include information and opinions generated to comply with other OSHA health standards.]

(10) *Medical presumption.* For purposes of this paragraph (j) of this section, the physician or other licensed health care professional shall presume, unless medical evidence indicates to the contrary, that a medical condition is unlikely to require medical removal from MC exposure if the employee is not exposed to MC above the 8-hour TWA PEL. If the physician or other licensed health care professional recommends removal for an employee exposed below the 8-hour TWA PEL, the physician or other licensed health care professional shall cite specific medical evidence, sufficient to rebut the presumption that exposure below the 8-hour TWA PEL is unlikely to require removal, to support

the recommendation. If such evidence is cited by the physician or other licensed health care professional, the employer must remove the employee. If such evidence is not cited by the physician or other licensed health care professional, the employer is not required to remove the employee.

(11) *Medical Removal Protection (MRP).* (i) Temporary medical removal and return of an employee.

(A) Except as provided in paragraph (j)(10) of this section, when a medical determination recommends removal because the employee's exposure to MC may contribute to or aggravate the employee's existing cardiac, hepatic, neurological (including stroke), or skin disease, the employer must provide medical removal protection benefits to the employee and either:

(*1*) Transfer the employee to comparable work where methylene chloride exposure is below the action level; or

(*2*) Remove the employee from MC exposure.

(B) If comparable work is not available and the employer is able to demonstrate that removal and the costs of extending MRP benefits to an additional employee, considering feasibility in relation to the size of the employer's business and the other requirements of this standard, make further reliance on MRP an inappropriate remedy, the employer may retain the additional employee in the existing job until transfer or removal becomes appropriate, provided:

(*1*) The employer ensures that the employee receives additional medical surveillance, including a physical examination at least every 60 days until transfer or removal occurs; and

(*2*) The employer or PLHCP informs the employee of the risk to the employee's health from continued MC exposure.

(C) The employer shall maintain in effect any job-related protective measures or limitations, other than removal, for as long as a medical determination recommends them to be necessary.

(ii) End of MRP benefits and return of the employee to former job status.

(A) The employer may cease providing MRP benefits at the earliest of the following:

(*1*) Six months;

(*2*) Return of the employee to the employee's former job status following receipt of a medical determination concluding that the employee's exposure to MC no longer will aggravate any cardiac, hepatic, neurological (including stroke), or dermal disease;

(*3*) Receipt of a medical determination concluding that the employee can never return to MC exposure.

(B) For the purposes of this paragraph (j), the requirement that an employer return an employee to the employee's former job status is not intended to expand upon or restrict any rights an employee has or would have had, absent temporary medical removal, to a specific job classification or position under the terms of a collective bargaining agreement.

(12) *Medical removal protection benefits.* (i) For purposes of this paragraph (j), the term medical removal protection benefits means that, for each removal, an employer must maintain for up to six months the earnings, seniority, and other employment rights and benefits of the employee as though the employee had not been removed from MC exposure or transferred to a comparable job.

(ii) During the period of time that an employee is removed from exposure to MC, the employer may condition the provision of medical removal protection benefits upon the employee's participation in follow-up medical surveillance made available pursuant to this section.

(iii) If a removed employee files a workers' compensation claim for a MC-related disability, the employer shall continue the MRP benefits required by this paragraph until either the claim is resolved or the 6-month period for payment f MRP benefits has passed, whichever occurs first. To the extent the employee is entitled to indemnity payments for earnings lost during the period of removal, the employer's obligation to provide medical removal protection benefits to the employee shall be reduced by the amount of such indemnity payments.

(iv) The employer's obligation to provide medical removal protection benefits to a removed employee shall be reduced to the extent that the employee

receives compensation for earnings lost during the period of removal from either a publicly or an employer-funded compensation program, or receives income from employment with another employer made possible by virtue of the employee's removal.

(13) *Voluntary removal or restriction of an employee.* Where an employer, although not required by this section to do so, removes an employee from exposure to MC or otherwise places any limitation on an employee due to the effects of MC exposure on the employee's medical condition, the employer shall provide medical removal protection benefits to the employee equal to those required by paragraph (j)(12) of this section.

(14) *Multiple health care professional review mechanism.* (i) If the employer selects the initial physician or licensed health care professional (PLHCP) to conduct any medical examination or consultation provided to an employee under this paragraph (j)(11), the employer shall notify the employee of the right to seek a second medical opinion each time the employer provides the employee with a copy of the written opinion of that PLHCP.

(ii) If the employee does not agree with the opinion of the employer-selected PLHCP, notifies the employer of that fact, and takes steps to make an appointment with a second PLHCP within 15 days of receiving a copy of the written opinion of the initial PLHCP, the employer shall pay for the PLHCP chosen by the employee to perform at least the following:

(A) Review any findings, determinations or recommendations of the initial PLHCP; and

(B) Conduct such examinations, consultations, and laboratory tests as the PLHCP deems necessary to facilitate this review.

(iii) If the findings, determinations or recommendations of the second PLHCP differ from those of the initial PLHCP, then the employer and the employee shall instruct the two health care professionals to resolve the disagreement.

(iv) If the two health care professionals are unable to resolve their disagreement within 15 days, then those two health care professionals shall jointly designate a PLHCP who is a specialist in the field at issue. The employer shall pay for the specialist to perform at least the following:

(A) Review the findings, determinations, and recommendations of the first two PLHCPs; and

(B) Conduct such examinations, consultations, laboratory tests and discussions with the prior PLHCPs as the specialist deems necessary to resolve the disagreements of the prior health care professionals.

(v) The written opinion of the specialist shall be the definitive medical determination. The employer shall act consistent with the definitive medical determination, unless the employer and employee agree that the written opinion of one of the other two PLHCPs shall be the definitive medical determination.

(vi) The employer and the employee or authorized employee representative may agree upon the use of any expeditious alternate health care professional determination mechanism in lieu of the multiple health care professional review mechanism provided by this paragraph so long as the alternate mechanism otherwise satisfies the requirements contained in this paragraph.

(k) *Hazard communication.*—(1) *Hazard communication—general.* (i) Chemical manufacturers, importers, distributors and employers shall comply with all requirements of the Hazard Communication Standard (HCS) (§ 1910.1200) for MC.

(ii) In classifying the hazards of MC at least the following hazards are to be addressed: Cancer, cardiac effects (including elevation of carboxyhemoglobin), central nervous system effects, liver effects, and skin and eye irritation.

(iii) Employers shall include MC in the hazard communication program established to comply with the HCS (§ 1910.1200). Employers shall ensure that each employee has access to labels on containers of MC and to safety data sheets, and is trained in accordance with the requirements of HCS and paragraph (l) of this section.

(2) [Reserved]

(l) *Employee information and training.* (1) The employer shall provide information and training for each affected employee prior to or at the time of initial assignment to a job involving potential exposure to MC.

(2) The employer shall ensure that information and training is presented in a manner that is understandable to the employees.

(3) In addition to the information required under the Hazard Communication Standard at 29 CFR 1910.1200, 29 CFR 1915.1200, or 29 CFR 1926.59, as appropiate:

(i) The employer shall inform each affected employee of the requirements of this section and information available in its appendices, as well as how to access or obtain a copy of it in the workplace;

(ii) Wherever an employee's exposure to airborne concentrations of MC exceeds or can reasonably be expected to exceed the action level, the employer shall inform each affected employee of the quantity, location, manner of use, release, and storage of MC and the specific operations in the workplace that could result in exposure to MC, particularly noting where exposures may be above the 8-hour TWA PEL or STEL;

(4) The employer shall train each affected employee as required under the Hazard Communication standard at 29 CFR 1910.1200, 29 CFR 1915.1200, or 29 CFR 1926.59, as appropiate.

(5) The employer shall re-train each affected employee as necessary to ensure that each employee exposed above the action level or the STEL maintains the requisite understanding of the principles of safe use and handling of MC in the workplace.

(6) Whenever there are workplace changes, such as modifications of tasks or procedures or the institution of new tasks or procedures, which increase employee exposure, and where those exposures exceed or can reasonably be expected to exceed the action level, the employer shall update the training as necessary to ensure that each affected employee has the requisite proficiency.

(7) An employer whose employees are exposed to MC at a multi-employer worksite shall notify the other employers with work operations at that site in accordance with the requirements of the Hazard Communication Standard, 29 CFR 1910.1200, 29 CFR 1915.1200, or 29 CFR 1926.59, as appropiate.

(8) The employer shall provide to the Assistant Secretary or the Director, upon request, all available materials relating to employee information and training.

(m) *Recordkeeping*—(1) *Objective data.* (i) Where an employer seeks to demonstrate that initial monitoring is unnecessary through reasonable reliance on objective data showing that any materials in the workplace containing MC will not release MC at levels which exceed the action level or the STEL under foreseeable conditions of exposure, the employer shall establish and maintain an accurate record of the objective data relied upon in support of the exemption.

(ii) This record shall include at least the following information:

(A) The MC-containing material in question;

(B) The source of the objective data;

(C) The testing protocol, results of testing, and/or analysis of the material for the release of MC;

(D) A description of the operation exempted under paragraph (d)(2)(i) of this section and how the data support the exemption; and

(E) Other data relevant to the operations, materials, processing, or employee exposures covered by the exemption.

(iii) The employer shall maintain this record for the duration of the employer's reliance upon such objective data.

(2) *Exposure measurements.* (i) The employer shall establish and keep an accurate record of all measurements taken to monitor employee exposure to MC as prescribed in paragraph (d) of this section.

(ii) Where the employer has 20 or more employees, this record shall include at least the following information:

(A) The date of measurement for each sample taken;

(B) The operation involving exposure to MC which is being monitored;

(C) Sampling and analytical methods used and evidence of their accuracy;

(D) Number, duration, and results of samples taken;

(E) Type of personal protective equipment, such as respiratory protective devices, worn, if any; and

(F) Name, social security number, job classification and exposure of all of the employees represented by monitoring, indicating which employees were actually monitored.

(iii) Where the employer has fewer than 20 employees, the record shall include at least the following information:

(A) The date of measurement for each sample taken;

(B) Number, duration, and results of samples taken; and

(C) Name, social security number, job classification and exposure of all of the employees represented by monitoring, indicating which employees were actually monitored.

(iv) The employer shall maintain this record for at least thirty (30) years, in accordance with 29 CFR 1910.1020.

(3) *Medical surveillance.* (i) The employer shall establish and maintain an accurate record for each employee subject to medical surveillance under paragraph (j) of this section.

(ii) The record shall include at least the following information:

(A) The name, social security number and description of the duties of the employee;

(B) Written medical opinions; and

(C) Any employee medical conditions related to exposure to MC.

(iii) The employer shall ensure that this record is maintained for the duration of employment plus thirty (30) years, in accordance with 29 CFR 1910.1020.

(4) *Availability.* (i) The employer, upon written request, shall make all records required to be maintained by this section available to the Assistant Secretary and the Director for examination and copying in accordance with 29 CFR 1910.1020.

[NOTE TO PARAGRAPH (m)(4)(i): All records required to be maintained by this section may be kept in the most administratively convenient form (for example, electronic or computer records would satisfy this requirement).]

(ii) The employer, upon request, shall make any employee exposure and objective data records required by this section available for examination and copying by affected employees, former employees, and designated representatives in accordance with 29 CFR 1910.1020.

(iii) The employer, upon request, shall make employee medical records required to be kept by this section available for examination and copying by the subject employee and by anyone having the specific written consent of the subject employee in accordance with 29 CFR 1910.1020.

(5) *Transfer of records.* The employer shall comply with the requirements concerning transfer of records set forth in 29 CFR 1910.1020(h).

(n) [Reserved]

(o) *Appendices.* The information contained in the appendices does not, by itself, create any additional obligations not otherwise imposed or detract from any existing obligation.

[NOTE TO PARAGRAPH (o): The requirement of 29 CFR 1910.1052(g)(1) to use respiratory protection whenever an employee's exposure to methylene chloride exceeds or can reasonably be expected to exceed the 8-hour TWA PEL is hereby stayed until August 31, 1998 for employers engaged in polyurethane foam manufacturing; foam fabrication; furniture refinishing; general aviation aircraft stripping; formulation of products containing methylene chloride; boat building and repair; recreational vehicle manufacture; van conversion; upholstery; and use of methylene chloride in construction work for restoration and preservation of buildings, painting and paint removal, cabinet making and/or floor refinishing and resurfacing.

The requirement of 29 CFR 1910.1052(f)(1) to implement engineering controls to achieve the 8-hour TWA PEL and STEL is hereby stayed until December 10, 1998 for employers with more than 100 employees engaged in polyurethane foam manufacturing and for employers with more than 20 employees engaged in foam fabrication; furniture refinishing; general aviation aircraft stripping; formulation of products containing methylene chloride; boat building and repair; recreational vehicle manufacture; van conversion; upholstery; and use of methylene chloride in construction work for restoration and preservation of buildings, painting and paint removal, cabinet making and/or floor refinishing and resurfacing.]

APPENDIX A TO SECTION 1910.1052—SUBSTANCE SAFETY DATA SHEET AND TECHNICAL GUIDELINES FOR METHYLENE CHLORIDE

I. SUBSTANCE IDENTIFICATION

A. Substance: Methylene chloride (CH_2Cl_2).

B. Synonyms: MC, Dichloromethane (DCM); Methylene dichloride; Methylene bichloride; Methane dichloride; CAS: 75–09–2; NCI-C50102.

C. Physical data:

1. Molecular weight: 84.9.

2. Boiling point (760 mm Hg): 39.8 °C (104 °F).

3. Specific gravity (water=1): 1.3.

4. Vapor density (air=1 at boiling point): 2.9.

5. Vapor pressure at 20 °C (68 °F): 350 mm Hg.

6. Solubility in water, g/100 g water at 20 °C (68 °F)=1.32.

7. Appearance and odor: colorless liquid with a chloroform-like odor.

D. Uses:

MC is used as a solvent, especially where high volatility is required. It is a good solvent for oils, fats, waxes, resins, bitumen, rubber and cellulose acetate and is a useful paint stripper and degreaser. It is used in paint removers, in propellant mixtures for aerosol containers, as a solvent for plastics, as a degreasing agent, as an extracting agent in the pharmaceutical industry and as a blowing agent in polyurethane foams. Its solvent property is sometimes increased by mixing with methanol, petroleum naphtha or tetrachloroethylene.

E. Appearance and odor:

MC is a clear colorless liquid with a chloroform-like odor. It is slightly soluble in water and completely miscible with most organic solvents.

F. Permissible exposure:

Exposure may not exceed 25 parts MC per million parts of air (25 ppm) as an eight-hour time-weighted average (8-hour TWA PEL) or 125 parts of MC per million parts of air (125 ppm) averaged over a 15-minute period (STEL).

II. HEALTH HAZARD DATA

A. MC can affect the body if it is inhaled or if the liquid comes in contact with the eyes or skin. It can also affect the body if it is swallowed.

B. Effects of overexposure:

1. Short-term Exposure:

MC is an anesthetic. Inhaling the vapor may cause mental confusion, light-headedness, nausea, vomiting, and headache. Continued exposure may cause increased light-headedness, staggering, unconsciousness, and even death. High vapor concentrations may also cause irritation of the eyes and respiratory tract. Exposure to MC may make the symptoms of angina (chest pains) worse. Skin exposure to liquid MC may cause irritation. If liquid MC remains on the skin, it may cause skin burns. Splashes of the liquid into the eyes may cause irritation.

2. Long-term (chronic) exposure:

The best evidence that MC causes cancer is from laboratory studies in which rats, mice and hamsters inhaled MC 6 hours per day, 5 days per week for 2 years. MC exposure produced lung and liver tumors in mice and mammary tumors in rats. No carcinogenic effects of MC were found in hamsters.

There are also some human epidemiological studies which show an association between occupational exposure to MC and increases in biliary (bile duct) cancer and a type of brain cancer. Other epidemiological studies have not observed a relationship between MC exposure and cancer. OSHA interprets these results to mean that there is suggestive (but not absolute) evidence that MC is a human carcinogen.

C. Reporting signs and symptoms:

You should inform your employer if you develop any signs or symptoms and suspect that they are caused by exposure to MC.

D. Warning Properties:

1. Odor Threshold:

Different authors have reported varying odor thresholds for MC. Kirk-Othmer and Sax both reported 25 to 50 ppm; Summer and May both reported 150 ppm; Spector reports 320 ppm. Patty, however, states that since one can become adapted to the odor, MC should not be considered to have adequate warning properties.

2. Eye Irritation Level:

Kirk-Othmer reports that ''MC vapor is seriously damaging to the eyes.'' Sax agrees with Kirk-Othmer's statement. The ACGIH Documentation of TLVs states that irritation of the eyes has been observed in workers exposed to concentrations up to 5000 ppm.

3. Evaluation of Warning Properties:

Since a wide range of MC odor thresholds are reported (25–320 ppm), and human adaptation to the odor occurs, MC is considered to be a material with poor warning properties.

III. EMERGENCY FIRST AID PROCEDURES

In the event of emergency, institute first aid procedures and send for first aid or medical assistance.

A. Eye and Skin Exposures:

If there is a potential for liquid MC to come in contact with eye or skin, face shields and skin protective equipment must be provided and used. If liquid MC comes in contact with the eye, get medical attention. Contact lenses should not be worn when working with this chemical.

B. Breathing:

If a person breathes in large amounts of MC, move the exposed person to fresh air at once. If breathing has stopped, perform

cardiopulmorary resuscitation. Keep the affected person warm and at rest. Get medical attention as soon as possible.

C. Rescue:

Move the affected person from the hazardous exposure immediately. If the exposed person has been overcome, notify someone else and put into effect the established emergency rescue procedures. Understand the facility's emergency rescue procedures and know the locations of rescue equipment before the need arises. Do not become a casualty yourself.

IV. RESPIRATORS, PROTECTIVE CLOTHING, AND EYE PROTECTION

A. Respirators:

Good industrial hygiene practices recommend that engineering controls be used to reduce environmental concentrations to the permissible exposure level. However, there are some exceptions where respirators may be used to control exposure. Respirators may be used when engineering and work practice controls are not feasible, when such controls are in the process of being installed, or when these controls fail and need to be supplemented. Respirators may also be used for operations which require entry into tanks or closed vessels, and in emergency situations.

If the use of respirators is necessary, the only respirators permitted are those that have been approved by the Mine Safety and Health Administration (MSHA) or the National Institute for Occupational Safety and Health (NIOSH). Supplied-air respirators are *required* because air-purifying respirators do not provide adequate respiratory protection against MC.

In addition to respirator selection, a complete written respiratory protection program should be instituted which includes regular training, maintenance, inspection, cleaning, and evaluation. If you can smell MC while wearing a respirator, proceed immediately to fresh air. If you experience difficulty in breathing while wearing a respirator, tell your employer.

B. Protective Clothing:

Employees must be provided with and required to use impervious clothing, gloves, face shields (eight-inch minimum), and other appropriate protective clothing necessary to prevent repeated or prolonged skin contact with liquid MC or contact with vessels containing liquid MC. Any clothing which becomes wet with liquid MC should be removed immediately and not reworn until the employer has ensured that the protective clothing is fit for reuse. Contaminated protective clothing should be placed in a regulated area designated by the employer for removal of MC before the clothing is laundered or disposed of. Clothing and equipment should remain in the regulated area until all of the MC contamination has evaporated; clothing and equipment should then be laundered or disposed of as appropriate.

C. Eye Protection:

Employees should be provided with and required to use splash-proof safety goggles where liquid MC may contact the eyes.

V. HOUSEKEEPING AND HYGIENE FACILITIES

For purposes of complying with 29 CFR 1910.141, the following items should be emphasized:

A. The workplace should be kept clean, orderly, and in a sanitary condition. The employer should institute a leak and spill detection program for operations involving liquid MC in order to detect sources of fugitive MC emissions.

B. Emergency drench showers and eyewash facilities are recommended. These should be maintained in a sanitary condition. Suitable cleansing agents should also be provided to assure the effective removal of MC from the skin.

C. Because of the hazardous nature of MC, contaminated protective clothing should be placed in a regulated area designated by the employer for removal of MC before the clothing is laundered or disposed of.

VI. PRECAUTIONS FOR SAFE USE, HANDLING, AND STORAGE

A. Fire and Explosion Hazards:

MC has no flash point in a conventional closed tester, but it forms flammable vapor-air mixtures at approximately 100 °C (212 °F), or higher. It has a lower explosion limit of 12%, and an upper explosion limit of 19% in air. It has an autoignition temperature of 556.1 °C (1033 °F), and a boiling point of 39.8 °C (104 °F). It is heavier than water with a specific gravity of 1.3. It is slightly soluble in water.

B. Reactivity Hazards:

Conditions contributing to the instability of MC are heat and moisture. Contact with strong oxidizers, caustics, and chemically active metals such as aluminum or magnesium powder, sodium and potassium may cause fires and explosions.

Special precautions: Liquid MC will attack some forms of plastics, rubber, and coatings.

C. Toxicity:

Liquid MC is painful and irritating if splashed in the eyes or if confined on the skin by gloves, clothing, or shoes. Vapors in high concentrations may cause narcosis and death. Prolonged exposure to vapors may cause cancer or exacerbate cardiac disease.

D. Storage:

Protect against physical damage. Because of its corrosive properties, and its high vapor pressure, MC should be stored in plain, galvanized or lead lined, mild steel containers in a cool, dry, well ventilated area away from direct sunlight, heat source and acute fire hazards.

E. Piping Material:

All piping and valves at the loading or unloading station should be of material that is resistant to MC and should be carefully inspected prior to connection to the transport vehicle and periodically during the operation.

F. Usual Shipping Containers:

Glass bottles, 5- and 55-gallon steel drums, tank cars, and tank trucks.

NOTE: This section addresses MC exposure in marine terminal and longshore employment only where leaking or broken packages allow MC exposure that is not addressed through compliance with 29 CFR parts 1917 and 1918, respectively.

G. Electrical Equipment:

Electrical installations in Class I hazardous locations as defined in Article 500 of the National Electrical Code, should be installed according to Article 501 of the code; and electrical equipment should be suitable for use in atmospheres containing MC vapors. See Flammable and Combustible Liquids Code (NFPA No. 325M), Chemical Safety Data Sheet SD–86 (Manufacturing Chemists' Association, Inc.).

H. Fire Fighting:

When involved in fire, MC emits highly toxic and irritating fumes such as phosgene, hydrogen chloride and carbon monoxide. Wear breathing apparatus and use water spray to keep fire-exposed containers cool. Water spray may be used to flush spills away from exposures. Extinguishing media are dry chemical, carbon dioxide, foam. For purposes of compliance with 29 CFR 1910.307, locations classified as hazardous due to the presence of MC shall be Class I.

I. Spills and Leaks:

Persons not wearing protective equipment and clothing should be restricted from areas of spills or leaks until cleanup has been completed. If MC has spilled or leaked, the following steps should be taken:

1. Remove all ignition sources.
2. Ventilate area of spill or leak.
3. Collect for reclamation or absorb in vermiculite, dry sand, earth, or a similar material.

J. Methods of Waste Disposal:

Small spills should be absorbed onto sand and taken to a safe area for atmospheric evaporation. Incineration is the preferred method for disposal of large quantities by mixing with a combustible solvent and spraying into an incinerator equipped with acid scrubbers to remove hydrogen chloride gases formed. Complete combustion will convert carbon monoxide to carbon dioxide. Care should be taken for the presence of phosgene.

K. You should not keep food, beverage, or smoking materials, or eat or smoke in regulated areas where MC concentrations are above the permissible exposure limits.

L. Portable heating units should not be used in confined areas where MC is used.

M. Ask your supervisor where MC is used in your work area and for any additional plant safety and health rules.

VII. MEDICAL REQUIREMENTS

Your employer is required to offer you the opportunity to participate in a medical surveillance program if you are exposed to MC at concentrations at or above the action level (12.5 ppm 8-hour TWA) for more than 30 days a year or at concentrations exceeding the PELs (25 ppm 8-hour TWA or 125 ppm 15-minute STEL) for more than 10 days a year. If you are exposed to MC at concentrations over either of the PELs, your employer will also be required to have a physician or other licensed health care professional ensure that you are able to wear the respirator that you are assigned. Your employer must provide all medical examinations relating to your MC exposure at a reasonable time and place and at no cost to you.

VIII. MONITORING AND MEASUREMENT PROCEDURES

A. Exposure above the Permissible Exposure Limit:

1. Eight-hour exposure evaluation: Measurements taken for the purpose of determining employee exposure under this section are best taken with consecutive samples covering the full shift. Air samples must be taken in the employee's breathing zone.

2. Monitoring techniques: The sampling and analysis under this section may be performed by collection of the MC vapor on two charcoal adsorption tubes in series or other composition adsorption tubes, with subsequent chemical analysis. Sampling and analysis may also be performed by instruments such as real-time continuous monitoring systems, portable direct reading instruments, or passive dosimeters as long as measurements taken using these methods accurately evaluate the concentration of MC in employees'' breathing zones.

OSHA method 80 is an example of a validated method of sampling and analysis of MC. Copies of this method are available from OSHA or can be downloaded from the Internet at *http://www.osha.gov*. The employer has the obligation of selecting a monitoring method which meets the accuracy and precision requirements of the standard under his or her unique field conditions. The standard requires that the method of monitoring must be accurate, to a 95 percent confidence level, to plus or minus 25 percent for concentrations of MC at or above 25 ppm, and to plus or minus 35 percent for concentrations at or below 25 ppm. In addition to OSHA method 80, there are numerous other methods available for monitoring for MC in the workplace.

B. Since many of the duties relating to employee exposure are dependent on the results of measurement procedures, employers must assure that the evaluation of employee exposure is performed by a technically qualified person.

IX. OBSERVATION OF MONITORING

Your employer is required to perform measurements that are representative of your exposure to MC and you or your designated representative are entitled to observe the monitoring procedure. You are entitled to observe the steps taken in the measurement procedure, and to record the results obtained. When the monitoring procedure is taking place in an area where respirators or personal protective clothing and equipment are required to be worn, you or your representative must also be provided with, and must wear, protective clothing and equipment.

X. ACCESS TO INFORMATION

A. Your employer is required to inform you of the information contained in this Appendix. In addition, your employer must instruct you in the proper work practices for using MC, emergency procedures, and the correct use of protective equipment.

B. Your employer is required to determine whether you are being exposed to MC. You or your representative has the right to observe employee measurements and to record the results obtained. Your employer is required to inform you of your exposure. If your employer determines that you are being over exposed, he or she is required to inform you of the actions which are being taken to reduce your exposure to within permissible exposure limits.

C. Your employer is required to keep records of your exposures and medical examinations. These records must be kept by the employer for at least thirty (30) years.

D. Your employer is required to release your exposure and medical records to you or your representative upon your request.

E. Your employer is required to provide labels and safety data sheets (SDSs) for all materials, mixtures or solutions composed of greater than 0.1 percent MC. These materials, mixtures or solutions would be classified and labeled in accordance with § 1910.1200.

DANGER CONTAINS METHYLENE CHLORIDE
POTENTIAL CANCER HAZARD

May worsen heart disease because methylene chloride is converted to carbon monoxide in the body.

May cause dizziness, headache, irritation of the throat and lungs, loss of consciousness and death at high concentrations (for example, if used in a poorly ventilated room).

Avoid Skin Contact. Contact with liquid causes skin and eye irritation.

XI. COMMON OPERATIONS AND CONTROLS

The following list includes some common operations in which exposure to MC may occur and control methods which may be effective in each case:

Operations	Controls
Use as solvent in paint and varnish removers; manufacture of aerosols; cold cleaning and ultrasonic cleaning; and as a solvent in furniture stripping.	General dilution ventilation; local exhaust ventilation; personal protective equipment; substitution.
Use as solvent in vapor degreasing.	Process enclosure; local exhaust ventilation; chilling coils; substitution.
Use as a secondary refrigerant in air conditioning and scientific testing.	General dilution ventilation; local exhaust ventilation; personal protective equipment.

APPENDIX B TO SECTION 1910.1052—MEDICAL SURVEILLANCE FOR METHYLENE CHLORIDE

I. PRIMARY ROUTE OF ENTRY

Inhalation.

II. TOXICOLOGY

Methylene Chloride (MC) is primarily an inhalation hazard. The principal acute hazardous effects are the depressant action on the central nervous system, possible cardiac toxicity and possible liver toxicity. The range of CNS effects are from decreased eye/hand coordination and decreased performance in vigilance tasks to narcosis and even death of individuals exposed at very high doses. Cardiac toxicity is due to the metabolism of MC to carbon monoxide, and the effects of carbon monoxide on heart tissue. Carbon monoxide displaces oxygen in the blood, decreases the oxygen available to heart tissue, increasing the risk of damage to the heart, which may result in heart attacks in susceptible individuals. Susceptible individuals include persons with heart disease and those with risk factors for heart disease.

Elevated liver enzymes and irritation to the respiratory passages and eyes have also been reported for both humans and experimental animals exposed to MC vapors.

MC is metabolized to carbon monoxide and carbon dioxide via two separate pathways. Through the first pathway, MC is metabolized to carbon monoxide as an end-product via the P–450 mixed function oxidase pathway located in the microsomal fraction of the cell. This biotransformation of MC to carbon monoxide occurs through the process of microsomal oxidative dechlorination which takes place primarily in the liver. The amount of conversion to carbon monoxide is significant as measured by the concentration

of carboxyhemoglobin, up to 12% measured in the blood following occupational exposure of up to 610 ppm. Through the second pathway, MC is metabolized to carbon dioxide as an end product (with formaldehyde and formic acid as metabolic intermediates) via the glutathione dependent enzyme found in the cytosolic fraction of the liver cell. Metabolites along this pathway are believed to be associated with the carcinogenic activity of MC.

MC has been tested for carcinogenicity in several laboratory rodents. These rodent studies indicate that there is clear evidence that MC is carcinogenic to male and female mice and female rats. Based on epidemiologic studies, OSHA has concluded that there is suggestive evidence of increased cancer risk in MC-related worker populations. The epidemiological evidence is consistent with the finding of excess cancer in the experimental animal studies. NIOSH regards MC as a potential occupational carcinogen and the International Agency for Research Cancer (IARC) classifies MC as an animal carcinogen. OSHA considers MC as a suspected human carcinogen.

III. Medical Signs and Symptoms of Acute Exposure

Skin exposure to liquid MC may cause irritation or skin burns. Liquid MC can also be irritating to the eyes. MC is also absorbed through the skin and may contribute to the MC exposure by inhalation.

At high concentrations in air, MC may cause nausea, vomiting, light-headedness, numbness of the extremities, changes in blood enzyme levels, and breathing problems, leading to bronchitis and pulmonary edema, unconsciousness and even death.

At lower concentrations in air, MC may cause irritation to the skin, eye, and respiratory tract and occasionally headache and nausea. Perhaps the greatest problem from exposure to low concentrations of MC is the CNS effects on coordination and alertness that may cause unsafe operations of machinery and equipment, leading to self-injury or accidents.

Low levels and short duration exposures do not seem to produce permanent disability, but chronic exposures to MC have been demonstrated to produce liver toxicity in animals, and therefore, the evidence is suggestive for liver toxicity in humans after chronic exposure.

Chronic exposure to MC may also cause cancer.

IV. Surveillance and Preventive Considerations

As discussed above, MC is classified as a suspect or potential human carcinogen. It is a central nervous system (CNS) depressant and a skin, eye and respiratory tract irritant. At extremely high concentrations, MC has caused liver damage in animals.

MC principally affects the CNS, where it acts as a narcotic. The observation of the symptoms characteristic of CNS depression, along with a physical examination, provides the best detection of early neurological disorders. Since exposure to MC also increases the carboxyhemoglobin level in the blood, ambient carbon monoxide levels would have an additive effect on that carboxyhemoglobin level. Based on such information, a periodic post-shift carboxyhemoglobin test as an index of the presence of carbon monoxide in the blood is recommended, but not required, for medical surveillance.

Based on the animal evidence and three epidemiologic studies previously mentioned, OSHA concludes that MC is a suspect human carcinogen. The medical surveillance program is designed to observe exposed workers on a regular basis. While the medical surveillance program cannot detect MC-induced cancer at a preneoplastic stage, OSHA anticipates that, as in the past, early detection and treatments of cancers leading to enhanced survival rates will continue to evolve.

A. Medical and Occupational History:

The medical and occupational work history plays an important role in the initial evaluation of workers exposed to MC. It is therefore extremely important for the examining physician or other licensed health care professional to evaluate the MC-exposed worker carefully and completely and to focus the examination on MC's potentially associated health hazards. The medical evaluation must include an annual detailed work and medical history with special emphasis on cardiac history and neurological symptoms.

An important goal of the medical history is to elicit information from the worker regarding potential signs or symptoms associated with increased levels of carboxyhemoglobin due to the presence of carbon monoxide in the blood. Physicians or other licensed health care professionals should ensure that the smoking history of all MC exposed employees is known. Exposure to MC may cause a significant increase in carboxyhemoglobin level in all exposed persons. However, smokers as well as workers with anemia or heart disease and those concurrently exposed to carbon monoxide are at especially high risk of toxic effects because of an already reduced oxygen carrying capacity of the blood.

A comprehensive or interim medical and work history should also include occurrence of headache, dizziness, fatigue, chest pain, shortness of breath, pain in the limbs, and irritation of the skin and eyes.

In addition, it is important for the physician or other licensed health care professional to become familiar with the operating conditions in which exposure to MC is likely to occur. The physician or other licensed health care professional also must become familiar with the signs and symptoms that may indicate that a worker is receiving otherwise unrecognized and exceptionally high exposure levels of MC.

An example of a medical and work history that would satisfy the requirement for a comprehensive or interim work history is represented by the following:

The following is a list of recommended questions and issues for the self-administered questionnaire for methylene chloride exposure.

QUESTIONNAIRE FOR METHYLENE CHLORIDE EXPOSURE

I. Demographic Information

1. Name
2. Social Security Number
3. Date
4. Date of Birth
5. Age
6. Present occupation
7. Sex
8. Race

II. Occupational History

1. Have you ever worked with methylene chloride, dichloromethane, methylene dichloride, or CH_2 Cl_2 (all are different names for the same chemical)? Please list which on the occupational history form if you have not already.

2. If you have worked in any of the following industries and have not listed them on the occupational history form, please do so.

Furniture stripping
Polyurethane foam manufacturing
Chemical manufacturing or formulation
Pharmaceutical manufacturing
Any industry in which you used solvents to clean and degrease equipment or parts
Construction, especially painting and refinishing
Aerosol manufacturing
Any industry in which you used aerosol adhesives

3. If you have not listed hobbies or household projects on the occupational history form, especially furniture refinishing, spray painting, or paint stripping, please do so.

III. Medical History

A. General

1. Do you consider yourself to be in good health? If no, state reason(s).

2. Do you or have you ever had:

a. Persistent thirst
b. Frequent urination (three times or more at night)
c. Dermatitis or irritated skin
d. Non-healing wounds

3. What prescription or non-prescription medications do you take, and for what reasons?

4. Are you allergic to any medications, and what type of reaction do you have?

B. Respiratory

1. Do you have or have you ever had any chest illnesses or diseases? Explain.

2. Do you have or have you ever had any of the following:

a. Asthma
b. Wheezing
c. Shortness of breath

3. Have you ever had an abnormal chest X-ray? If so, when, where, and what were the findings?

4. Have you ever had difficulty using a respirator or breathing apparatus? Explain.

5. Do any chest or lung diseases run in your family? Explain.

6. Have you ever smoked cigarettes, cigars, or a pipe? Age started:

7. Do you now smoke?

8. If you have stopped smoking completely, how old were you when you stopped?

9. On the average of the entire time you smoked, how many packs of cigarettes, cigars, or bowls of tobacco did you smoke per day?

C. Cardiovascular

1. Have you ever been diagnosed with any of the following: Which of the following apply to you now or did apply to you at some time in the past, even if the problem is controlled by medication? Please explain any yes answers (i.e., when problem was diagnosed, length of time on medication).

a. High cholesterol or triglyceride level
b. Hypertension (high blood pressure)
c. Diabetes
d. Family history of heart attack, stroke, or blocked arteries

2. Have you ever had chest pain? If so, answer the next five questions.

a. What was the quality of the pain (i.e., crushing, stabbing, squeezing)?
b. Did the pain go anywhere (i.e., into jaw, left arm)?
c. What brought the pain out?
d. How long did it last?
e. What made the pain go away?

3. Have you ever had heart disease, a heart attack, stroke, aneurysm, or blocked arteries anywhere in you body? Explain (when, treatment).

4. Have you ever had bypass surgery for blocked arteries in your heart or anywhere else? Explain.

5. Have you ever had any other procedures done to open up a blocked artery (balloon

angioplasty, carotid endarterectomy, clot-dissolving drug)?

6. Do you have or have you ever had (explain each):

a. Heart murmur
b. Irregular heartbeat
c. Shortness of breath while lying flat
d. Congestive heart failure
e. Ankle swelling
f. Recurrent pain anywhere below the waist while walking

7. Have you ever had an electrocardiogram (EKG)? When?

8. Have you ever had an abnormal EKG? If so, when, where, and what were the findings?

9. Do any heart diseases, high blood pressure, diabetes, high cholesterol, or high triglycerides run in your family? Explain.

D. Hepatobiliary and Pancreas

1. Do you now or have you ever drunk alcoholic beverages? Age started: _____ Age stopped: _____.

2. Average numbers per week:

a. Beers: _____, ounces in usual container:
b. Glasses of wine: _____, ounces per glass:
c. Drinks: _____, ounces in usual container:

3. Do you have or have you ever had (explain each):

a. Hepatitis (infectious, autoimmune, drug-induced, or chemical)
b. Jaundice
c. Elevated liver enzymes or elevated bilirubin
d. Liver disease or cancer

E. Central Nervous System

1. Do you or have you ever had (explain each):

a. Headache
b. Dizziness
c. Fainting
d. Loss of consciousness
e. Garbled speech
f. Lack of balance
g. Mental/psychiatric illness
h. Forgetfulness

F. Hematologic

1. Do you have, or have you ever had (explain each):

a. Anemia
b. Sickle cell disease or trait
c. Glucose-6-phosphate dehydrogenase deficiency
d. Bleeding tendency disorder

2. If not already mentioned previously, have you ever had a reaction to sulfa drugs or to drugs used to prevent or treat malaria? What was the drug? Describe the reaction.

B. Physical Examination

The complete physical examination, when coupled with the medical and occupational history, assists the physician or other licensed health care professional in detecting pre-existing conditions that might place the employee at increased risk, and establishes a baseline for future health monitoring. These examinations should include:

1. Clinical impressions of the nervous system, cardiovascular function and pulmonary function, with additional tests conducted where indicated or determined by the examining physician or other licensed health care professional to be necessary.

2. An evaluation of the advisability of the worker using a respirator, because the use of certain respirators places an additional burden on the cardiopulmonary system. It is necessary for the attending physician or other licensed health care professional to evaluate the cardiopulmonary function of these workers, in order to inform the employer in a written medical opinion of the worker's ability or fitness to work in an area requiring the use of certain types of respiratory protective equipment. The presence of facial hair or scars that might interfere with the worker's ability to wear certain types of respirators should also be noted during the examination and in the written medical opinion.

Because of the importance of lung function to workers required to wear certain types of respirators to protect themselves from MC exposure, these workers must receive an assessment of pulmonary function before they begin to wear a negative pressure respirator and at least annually thereafter. The recommended pulmonary function tests include measurement of the employee's forced vital capacity (FVC), forced expiratory volume at one second (FEV1), as well as calculation of the ratios of FEV1 to FVC, and the ratios of measured FVC and measured FEV1 to expected respective values corrected for variation due to age, sex, race, and height. Pulmonary function evaluation must be conducted by a physician or other licensed health care professional experienced in pulmonary function tests.

The following is a summary of the elements of a physical exam which would fulfill the requirements under the MC standard:

PHYSICAL EXAM

I. Skin and appendages

1. Irritated or broken skin
2. Jaundice
3. Clubbing cyanosis, edema
4. Capillary refill time
5. Pallor

II. Head

1. Facial deformities

2. Scars
3. Hair growth

III. Eyes

1. Scleral icterus
2. Corneal arcus
3. Pupillary size and response
4. Fundoscopic exam

IV. Chest

1. Standard exam

V. Heart

1. Standard exam
2. Jugular vein distension
3. Peripheral pulses

VI. Abdomen

1. Liver span

VII. Nervous System

1. Complete standard neurologic exam

VIII. Laboratory

1. Hemoglobin and hematocrit
2. Alanine aminotransferase (ALT, SGPT)
3. Post-shift carboxyhemoglobin

IX. Studies

1. Pulmonary function testing
2. Electrocardiogram

An evaluation of the oxygen carrying capacity of the blood of employees (for example by measured red blood cell volume) is considered useful, especially for workers acutely exposed to MC.

It is also recommended, but not required, that end of shift carboxyhemoglobin levels be determined periodically, and any level above 3% for non-smokers and above 10% for smokers should prompt an investigation of the worker and his workplace. This test is recommended because MC is metabolized to CO, which combines strongly with hemoglobin, resulting in a reduced capacity of the blood to transport oxygen in the body. This is of particular concern for cigarette smokers because they already have a diminished hemoglobin capacity due to the presence of CO in cigarette smoke.

C. Additional Examinations and Referrals

1. Examination by a Specialist

When a worker examination reveals unexplained symptoms or signs (i.e. in the physical examination or in the laboratory tests), follow-up medical examinations are necessary to assure that MC exposure is not adversely affecting the worker's health. When the examining physician or other licensed health care professional finds it necessary, additional tests should be included to determine the nature of the medical problem and the underlying cause. Where relevant, the worker should be sent to a specialist for further testing and treatment as deemed necessary.

The final rule requires additional investigations to be covered and it also permits physicians or other licensed health care professionals to add appropriate or necessary tests to improve the diagnosis of disease should such tests become available in the future.

2. Emergencies

The examination of workers exposed to MC in an emergency should be directed at the organ systems most likely to be affected. If the worker has received a severe acute exposure, hospitalization may be required to assure proper medical intervention. It is not possible to precisely define ''severe,'' but the physician or other licensed health care professional's judgement should not merely rest on hospitalization. If the worker has suffered significant conjunctival, oral, or nasal irritation, respiratory distress, or discomfort, the physician or other licensed health care professional should instigate appropriate follow-up procedures. These include attention to the eyes, lungs and the neurological system. The frequency of follow-up examinations should be determined by the attending physician or other licensed health care professional. This testing permits the early identification essential to proper medical management of such workers.

D. Employer Obligations

The employer is required to provide the responsible physician or other licensed health care professional and any specialists involved in a diagnosis with the following information: a copy of the MC standard including relevant appendices, a description of the affected employee's duties as they relate to his or her exposure to MC; an estimate of the employee's exposure including duration (e.g., 15hr/wk, three 8-hour shifts/wk, full time); a description of any personal protective equipment used by the employee, including respirators; and the results of any previous medical determinations for the affected employee related to MC exposure to the extent that this information is within the employer's control.

E. Physicians' or Other Licensed Health Care Professionals' Obligations

The standard requires the employer to ensure that the physician or other licensed health care professional provides a written statement to the employee and the employer. This statement should contain the physician's or licensed health care professional's opinion as to whether the employee has any medical condition placing him or her at increased risk of impaired health from exposure to MC or use of respirators, as appropriate. The physician or other licensed

health care professional should also state his or her opinion regarding any restrictions that should be placed on the employee's exposure to MC or upon the use of protective clothing or equipment such as respirators. If the employee wears a respirator as a result of his or her exposure to MC, the physician or other licensed health care professional's opinion should also contain a statement regarding the suitability of the employee to wear the type of respirator assigned. Furthermore, the employee should be informed by the physician or other licensed health care professional about the cancer risk of MC and about risk factors for heart disease, and the potential for exacerbation of underlying heart disease by exposure to MC through its metabolism to carbon monoxide. Finally, the physician or other licensed health care professional should inform the employer that the employee has been told the results of the medical examination and of any medical conditions which require further explanation or treatment. This written opinion must not contain any information on specific findings or diagnosis unrelated to employee's occupational exposures.

The purpose in requiring the examining physician or other licensed health care professional to supply the employer with a written opinion is to provide the employer with a medical basis to assist the employer in placing employees initially, in assuring that their health is not being impaired by exposure to MC, and to assess the employee's ability to use any required protective equipment.

APPENDIX C TO SECTION 1910.1052—QUESTIONS AND ANSWERS—METHYLENE CHLORIDE CONTROL IN FURNITURE STRIPPING

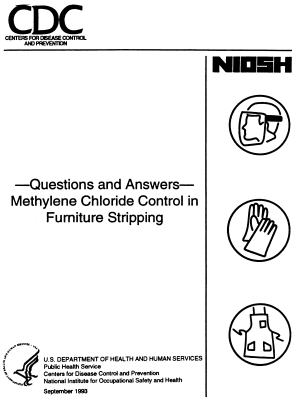

Q's & A's

DISCLAIMER

Mention of any company or product does not constitute endorsement by the Centers for Disease Control and Prevention, National Institute for Occupational Safety and Health.

This document is in the public domain and may be freely copied or reprinted.

Copies of this and other NIOSH documents are available from

Publications Dissemination, DSDTT

National Institute for Occupational Safety and Health

4676 Columbia Parkway

Cincinnati, OH 45226

FAX (513) 533-8573

For information about other occupational safety and health problems, call 1-800-35-NIOSH

DHHS (NIOSH) Publication No. 93-133

Introduction

This Pamphlet answers commonly asked questions about the hazards from exposure to methylene chloride. It also describes approaches to controlling methylene chloride exposure during the most common furniture stripping processes. Although these approaches were developed and field tested by NIOSH, each setting requires custom installation because of the different air flow interferences at each site.

What is the Stripping Solution Base?

The most common active ingredient in paint removers is a chemical called methylene chloride. Methylene chloride is present in the paint remover to penetrate, blister, and finally lift the old finish. Other chemicals in paint removers work to accelerate the stripping process, to retard evaporation, and to act as thickening agents. These other ingredients may include: methanol, toluene, acetone, or paraffin.[1]

Is Methylene Chloride Bad for Me?

Exposure to methylene chloride may cause short-term health effects or long-term health effects.

Short-Term (acute) Health Effects

Exposure to high levels of paint removers over short periods of time can cause irritation to the skin, eyes, mucous membranes, and respiratory tract. Other symptoms of high exposure are dizziness headache, and lack of coordination. The occurrence of any of these symptoms indicates that you are being exposed to high levels of the methylene chloride. At the onset of any of these symptoms, you should leave the work area, get some fresh air, and determine why the levels were high.

A portion of inhaled methylene chloride is converted by the body to carbon monoxide, which can lower the blood's ability to carry oxygen. When the solvent is used properly, however, the levels of carbon monoxide should not be hazardous. Individuals with cardiovascular or pulmonary health problems should check with their physician before using the paint stripper. Individuals experiencing severe symptoms such as shortness of breath or chest pains should obtain proper medical care immediately.[2]

Long-term (Chronic) Health Effects

Methylene chloride has been shown to cause cancer in certain laboratory animal tests. The available human studies do not provide the necessary information to determine whether methylene chloride causes cancer in humans. However, as a result of the animal studies, methylene chloride is

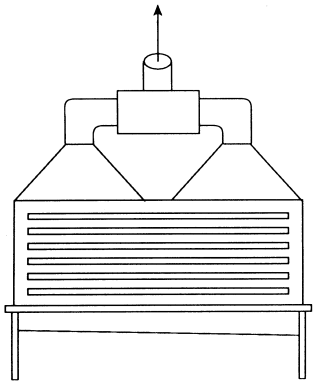

Figure 1 — Slot Hood

Q's & A's

Q's & A's

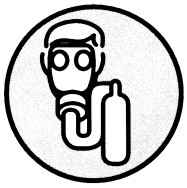

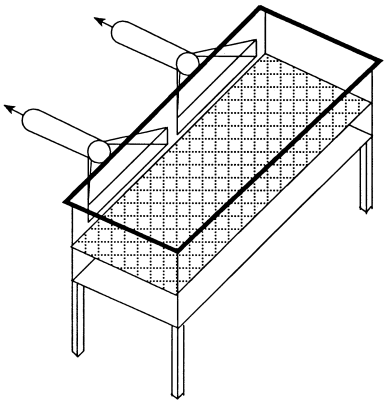

Figure 2 — Downdraft Hood

considered a potential occupational carcinogen. There is also considerable indirect evidence to suggest that workers exposed to methylene chloride may be at increased risk of developing ischemic heart disease. Therefore, it is prudent to minimize exposures to solvent vapors.[3]

What Do Federal Agencies Say About Methylene Chloride?

In 1991, the Occupational Safety and Health Administration published a Notice of Proposed Rulemaking for methylene chloride. The proposed standard would establish an eight-hour time-weighted average exposure limit of 25 parts per million (ppm), as well as a short-term exposure limit of 125 ppm determined from a 15 minute sampling period. That is a sharp reduction from the current limit of 500 ppm. The proposed standard would also set a 12.5 ppm action level (a level that would trigger periodic exposure monitoring and medical surveillance provisions.[4]

The National Institute for Occupational Safety and Health recommends that methylene chloride be regarded as a "potential occupational carcinogen." NIOSH further recommends that occupational exposure to methylene chloride be controlled to the lowest feasible limit. This recommendation was based on the observation of cancers and tumors in both rats and mice exposed to methylene chloride in air.[5]

How Can I Be Exposed to Methylene Chloride while Stripping Furniture?

Methylene chloride can be inhaled when vapors are in the air. Inhalation of the methylene chloride vapors is generally the most important source of exposure. Methylene chloride evaporates quicker than most chemicals. The odor threshold of methylene chloride is 300 ppm.[6] Therefore, once you smell methylene chloride, you are being over-exposed. Pouring, moving, or stirring the chemical will increase the rate of evaporation.

Methylene chloride can be absorbed through the skin either by directly touching the chemical or through your gloves. Methylene chloride can be swallowed if it gets on your hands, clothes, or beard, or if food or drinks become contaminated.

How Can Breathing Exposures be Reduced?

Install a Local Exhaust Ventilation System

Local exhaust ventilation can be used to control exposures. Local exhaust ventilation systems

capture contaminated air from the source before it spreads into the workers' breathing zone.[7] If engineering controls are not effective, only a self-contained breathing apparatus equipped with a full facepiece and operated in a positive-pressure mode or a supplied-air respirator affords the necessary level of protection. Air-purifying respirators such as organic vapor cartridges can only be used for escape situations.[8]

A local exhaust system consists of the following: a hood, a fan, ductwork, and a replacement air system.[9,10,11] Two processes are commonly used in furniture stripping: flow-over and dip tanks. For flow-over systems there are two common local exhaust controls for methylene chloride — a slot hood and a downdraft hood. A slot hood of different design is most often used for dip tanks. (See Figures 1, 2, and 3)

The hood is made of sheet metal and connected to the tank. All designs require a centrifugal fan to exhaust the fumes, ductwork connecting the hood and the fan, and a replacement air system to bring conditioned air into the building to replace the air exhausted.

In constructing or designing a slot or downdraft hood, use the following data:

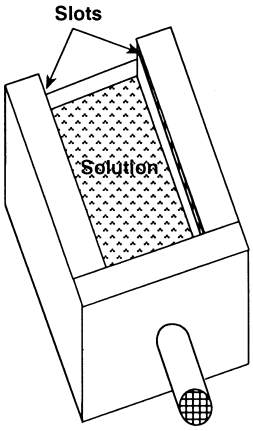

Figure 3 — Slot Hood for Dip Tank

Slot hood (Figure 1)

- At least 2200 cfm per 8' X 4' tank
- 1 - 2 inch slots
- Slot velocity - 1000 fpm
- 3 - 5 slots
- Plenum at least 1 foot deep

Downdraft hood (Figure 2)

- At least 1600 cfm per 8' X 4' tank
- Plenum at least 9" deep

Slot hood for Dip Tank (Figure 3)

- At least 2900 cfm per 8' X 4' tank
- 3/4" slot that runs the length of the front and back of the tank
- Slot velocity — 3200 fpm
- Plenum on the sides of the tank should be 6" deep by 36" long
- 12" duct leads from the center of the front plenum to the fan

Safe work practices

Workers can lower exposures by decreasing their access to the methylene chloride.[12]

1) Turn on dip tank control system several minutes before entering the stripping area.

2) Avoid unnecessary transferring or moving of stripping solution.

3) Keep face out of the air stream between the solution-covered furniture and the exhaust system.

4) Keep face out of vapor zone above the stripping solution and dip tank.

5) Retrieve dropped items with a long handled tool.

6) Keep the solution-recycling system off when not in use. Cover reservoir for recycling system.

7) Cover dip tank when not in use.

8) Provide adequate ventilation for rinse area.

Q's & A's

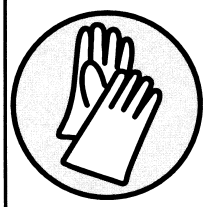

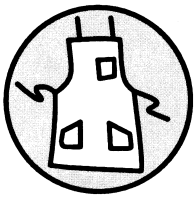

Q's & A's

How Can Skin Exposures be Reduced?

Skin exposures can be reduced by wearing gloves whenever you are in contact with the stripping solution.[13]

1) Two gloves should be worn. The inner glove should be made from polyethylene/ethylene vinyl alcohol (e.g. Silver Shield®, or 4H®). This material, however, does not provide good physical resistance against tears, so an outer glove made from nitrile or neoprene should be worn.

2) Shoulder-length gloves will be more protective.

3) Change gloves before the break-through time occurs. Rotate several pairs of gloves throughout the day. Let the gloves dry in a warm well ventilated area at least over night before reuse.

4) Keep gloves clean by rinsing often. Keep gloves in good condition. Inspect the gloves before use for pin-holes, cracks, thin spots, and stiffer than normal or sticky surfaces.

5) Wear a face shield or goggles to protect face and eyes.

What Other Problems Occur?

Stripping Solution Temperature

Most manufacturers of stripping solution recommend controlling the solution to a temperature of 70°F. This temperature is required for the wax in the solution to form a vapor barrier on top of the solution to keep the solution from evaporating too quickly. If the temperature is too high, the wax will not form the vapor barrier. If it is too cold, the wax will solidify and separate from the solvent causing increased evaporation. Use a belt heater to heat the solution to the correct temperature. Call your solution manufacturer for the correct temperature for your solution.[14]

Make-Up Air

Air will enter a building in an amount to equal the amount of air exhausted whether or not provision is made for this replacement. If a local exhaust system is added a make-up or replacement air system must be added to replace the air removed. Without a replacement air system, air will enter the building through cracks causing uncontrollable eddy currents. If the building perimeter is tightly sealed, it will prevent the air from entering and severely decrease the amount exhausted from the ventilation system. This will cause the building to be under negative pressure and decrease the performance of the exhaust system.[15]

Dilution Ventilation

With general or dilution ventilation, uncontaminated air is moved through the workroom by means of fans or open windows, which dilutes the pollutants in the air. Dilution ventilation does not provide effective protection to other workers and does not confine the methylene chloride vapors to one area.[16]

Phosgene Poisoning from Use of Kerosene Heaters

Do not use kerosene heaters or other open flame heaters while stripping furniture. Use of kerosene heaters in connection with methylene chloride can create lethal or dangerous concentrations of phosgene. Methylene chloride vapor is mixed with the air used for the combustion of kerosene in kerosene stoves. The vapor thus passes through the flames, coming into close contact with carbon monoxide at high temperatures. Any chlorine formed by decomposition may, under these conditions, react with carbon monoxide and form phosgene.[17]

REFERENCES

[1] Halogenated Solvents Industry Alliance and Consumer Product Safety Commission [1990]. Stripping Paint from Wood (Pamphlet for consumers on how to strip furniture and precautions to take). Washington DC: Consumer Product Safety Commission.

[2] *Ibid.*

[3] NIOSH [1992]. NIOSH Testimony on Occupational Safety and Health Administration's proposed rule on occupational exposure to methylene chloride, September 21, 1992, OSHA Docket No. H-71. NIOSH policy statements. Cincinnati, OH: U.S. Department of Health and Human Services, Public Health Service, Centers for Disease Control, National Institute for Occupational Safety and Health.

[4] 56 Fed. Reg. 57036 [1991]. Occupational Safety and Health Administration: Proposed rule on occupational exposure to methylene chloride.

[5] NIOSH [1992].

[6] Kirk, R.E. and P.F. Othmer, Eds. [1978]. Encyclopedia of Chemical Technology, 3rd Ed., Vol. 5:690. New York: John Wiley & Sons, Inc.

[7] ACGIH [1988]. Industrial Ventilation: A Manual of Recommended Practice. 20th Ed. Cincinnati, OH: American Conference of Governmental Industrial Hygienists.

[8] NIOSH [1992].

[9] Fairfield, C.L. and A.A. Beasley [1991]. In-depth Survey Report at the Association for Retarded Citizens, Meadowlands, PA. The Control of Methylene Chloride During Furniture Stripping. Cincinnati, OH: U.S. Department of Health and Human Services, Public Health Service, Centers for Disease Control, National Institute for Occupational Safety and Health.

[10] Fairfield, C.L. [1991]. In-depth Survey Report at the J.M. Murray Center, Cortland, NY. The Control of Methylene Chloride During Furniture Stripping. Cincinnati, OH: U.S. Department of Health and Human Services, Public Health Service, Centers for Disease Control, National Institute for Occupational Safety and Health.

[11] Hall, R.M., K.F. Martinez, and P.A. Jensen [1992]. In-depth Survey Report at Tri-County Furniture Stripping and Refinishing, Cincinnati, OH. The Control of Methylene Chloride During Furniture Stripping. Cincinnati, OH: U.S. Department of Health and Human Services, Public Health Service, Centers for Disease Control, National Institute for Occupational Safety and Health.

[12] Fairfield, C.L. and A.A. Beasley [1991]. In-depth Survey Report at the Association for Retarded Citizens, Meadowlands, PA. The Control of Methylene Chloride During Furniture Stripping. Cincinnati, OH: U.S. Department of Health and Human Services, Public Health Service, Centers for Disease Control, National Institute for Occupational Safety and Health.

[13] Roder, M. [1991]. Memorandum of March 11,1991 from Michael Roder of the Division of Safety Research to Cheryl L. Fairfield of the Division of Physical Sciences and Engineering, National Institute for Occupational Safety and Health, Centers for Disease Control, Public Health Service, U.S. Department of Health and Human Services.

[14] Kwick Kleen Industrial Solvents, Inc. [1981]. Operations Manual, Kwick Kleen Industrial Solvents, Inc., Vincennes, IN.

[15] ACGIH [1988].

[16] *Ibid.*

[17] Gerritsen, W.B. and C.H. Buschmann [1960]. Phosgene Poisoning Caused by the Use of Chemical Paint Removers containing Methylene Chloride in Ill-Ventilated Rooms Heated by Kerosene Stoves. British Journal of Industrial Medicine *17* :187.

Q's & A's

Where Should I go for More Information?

The NIOSH 800- number is a toll-free technical information service that provides convenient public access to NIOSH and its information resources. Callers may request information about any aspect of occupational safety and health.

1-800-35-NIOSH
(1-800-356-4674)

☆ U.S. GOVERNMENT PRINTING OFFICE: 1993: 550-147/80026

[62 FR 1601, Jan. 10, 1997, as amended at 62 FR 42667, Aug. 8, 1997; 62 FR 54383, Oct. 20, 1997; 62 FR 66277, Dec. 18, 1997; 63 FR 1295, Jan. 8, 1998; 63 FR 20099, Apr. 23, 1998; 63 FR 50729, Sept. 22, 1998; 71 FR 16674, Apr. 3, 2006; 71 FR 50190, Aug. 24, 2006; 73 FR 75587, Dec. 12, 2008; 77 FR 17785, Mar. 26, 2012; 78 FR 9313, Feb. 8, 2013]