AUTHENTICATED
U.S. GOVERNMENT
INFORMATION
GPO

Gaseous Organic Sampling and Analysis Data

Date _____

Location _____

Plant _____

	Source sample 1	Source sample 2	Source sample 3
1. General information:			
Source temperature (°C)			
Probe temperature (°C)			
Ambient temperature (°C)			
Atmospheric pressure (mm Hg)			
Source pressure (mm Hg)			
Sampling rate (ml/min)			
Sample loop volume (ml)			
Sample loop temperature (°C)			
Sample collection time (24-hr basis)			
Column temperature:			
Initial (°C)			
Program rate (°C/min)			
Final (°C)			
Carrier gas flow rate (ml/min)			
Detector temperature (°C)			
Chart speed (cm/min)			
Dilution gas flow rate (ml/min)			
Diluent gas used (symbol)			
Dilution ratio			

Performed by: (signature):_____ Date:_____

Figure 18–14. Sampling and Analysis Sheet

[36 FR 24877, Dec. 23, 1971]

EDITORIAL NOTE: For FEDERAL REGISTER citations affecting part 60, appendix A–6, see the List of CFR Sections Affected, which appears in the Finding Aids section of the printed volume and on GPO Access.

APPENDIX A–7 TO PART 60—TEST METHODS 19 THROUGH 25E

Method 19—Determination of sulfur dioxide removal efficiency and particulate, sulfur dioxide and nitrogen oxides emission rates

Method 20—Determination of nitrogen oxides, sulfur dioxide, and diluent emissions from stationary gas turbines

Method 21—Determination of volatile organic compound leaks

Method 22—Visual determination of fugitive emissions from material sources and smoke emissions from flares

Method 23—Determination of Polychlorinated Dibenzo-p-Dioxins and Polychlorinated Dibenzofurans From Stationary Sources

Method 24—Determination of volatile matter content, water content, density, volume solids, and weight solids of surface coatings

Method 24A—Determination of volatile matter content and density of printing inks and related coatings

Method 25—Determination of total gaseous nonmethane organic emissions as carbon

Method 25A—Determination of total gaseous organic concentration using a flame ionization analyzer

Method 25B—Determination of total gaseous organic concentration using a nondispersive infrared analyzer

Method 25C—Determination of nonmethane organic compounds (NMOC) in MSW landfill gases

Method 25D—Determination of the Volatile Organic Concentration of Waste Samples

Method 25E—Determination of Vapor Phase Organic Concentration in Waste Samples

The test methods in this appendix are referred to in § 60.8 (Performance Tests) and § 60.11 (Compliance With Standards and Maintenance Requirements) of 40 CFR part 60, subpart A (General Provisions). Specific uses of these test methods are described in the standards of performance contained in the subparts, beginning with Subpart D.

Within each standard of performance, a section title ''Test Methods and Procedures'' is provided to: (1) Identify the test methods to be used as reference methods to the facility subject to the respective standard and (2) identify any special instructions or conditions to be followed when applying a method to the respective facility. Such instructions (for example, establish sampling rates, volumes, or temperatures) are to be used either in addition to, or as a substitute for procedures in a test method. Similarly, for sources subject to emission monitoring requirements, specific instructions pertaining

to any use of a test method as a reference method are provided in the subpart or in Appendix B.

Inclusion of methods in this appendix is not intended as an endorsement or denial of their applicability to sources that are not subject to standards of performance. The methods are potentially applicable to other sources; however, applicability should be confirmed by careful and appropriate evaluation of the conditions prevalent at such sources.

The approach followed in the formulation of the test methods involves specifications for equipment, procedures, and performance. In concept, a performance specification approach would be preferable in all methods because this allows the greatest flexibility to the user. In practice, however, this approach is impractical in most cases because performance specifications cannot be established. Most of the methods described herein, therefore, involve specific equipment specifications and procedures, and only a few methods in this appendix rely on performance criteria.

Minor changes in the test methods should not necessarily affect the validity of the results and it is recognized that alternative and equivalent methods exist. Section 60.8 provides authority for the Administrator to specify or approve (1) equivalent methods, (2) alternative methods, and (3) minor changes in the methodology of the test methods. It should be clearly understood that unless otherwise identified all such methods and changes must have prior approval of the Administrator. An owner employing such methods or deviations from the test methods without obtaining prior approval does so at the risk of subsequent disapproval and retesting with approved methods.

Within the test methods, certain specific equipment or procedures are recognized as being acceptable or potentially acceptable and are specifically identified in the methods. The items identified as acceptable options may be used without approval but must be identified in the test report. The potentially approvable options are cited as ''subject to the approval of the Administrator'' or as ''or equivalent.'' Such potentially approvable techniques or alternatives may be used at the discretion of the owner without prior approval. However, detailed descriptions for applying these potentially approvable techniques or alternatives are not provided in the test methods. Also, the potentially approvable options are not necessarily acceptable in all applications. Therefore, an owner electing to use such potentially approvable techniques or alternatives is responsible for: (1) assuring that the techniques or alternatives are in fact applicable and are properly executed; (2) including a written description of the alternative method in the test report (the written method must be clear and must be capable of being performed without additional instruction, and the degree of detail should be similar to the detail contained in the test methods); and (3) providing any rationale or supporting data necessary to show the validity of the alternative in the particular application. Failure to meet these requirements can result in the Administrator's disapproval of the alternative.

METHOD 19—DETERMINATION OF SULFUR DIOXIDE REMOVAL EFFICIENCY AND PARTICULATE MATTER, SULFUR DIOXIDE, AND NITROGEN OXIDE EMISSION RATES

1.0 Scope and Application

1.1 Analytes. This method provides data reduction procedures relating to the following pollutants, but does not include any sample collection or analysis procedures.

Analyte	CAS No.	Sensitivity
Nitrogen oxides (NO_X), including:		
Nitric oxide (NO)	10102–43–9	N/A
Nitrogen dioxide (NO_2)	10102–44–0.	
Particulate matter (PM)	None assigned	N/A
Sulfur dioxide (SO_2)	7499–09–05	N/A

1.2 Applicability. Where specified by an applicable subpart of the regulations, this method is applicable for the determination of (a) PM, SO_2, and NO_X emission rates; (b) sulfur removal efficiencies of fuel pretreatment and SO_2 control devices; and (c) overall reduction of potential SO_2 emissions.

2.0 Summary of Method

2.1 Emission Rates. Oxygen (O_2) or carbon dioxide (CO_2) concentrations and appropriate F factors (ratios of combustion gas volumes to heat inputs) are used to calculate pollutant emission rates from pollutant concentrations.

2.2 Sulfur Reduction Efficiency and SO_2 Removal Efficiency. An overall SO_2 emission reduction efficiency is computed from the efficiency of fuel pretreatment systems, where

applicable, and the efficiency of SO_2 control devices.

2.2.1 The sulfur removal efficiency of a fuel pretreatment system is determined by fuel sampling and analysis of the sulfur and heat contents of the fuel before and after the pretreatment system.

2.2.2 The SO_2 removal efficiency of a control device is determined by measuring the SO_2 rates before and after the control device.

2.2.2.1 The inlet rates to SO_2 control systems (or, when SO_2 control systems are not used, SO_2 emission rates to the atmosphere) are determined by fuel sampling and analysis.

3.0 Definitions [Reserved]

4.0 Interferences [Reserved]

5.0 Safety [Reserved]

6.0 Equipment and Supplies [Reserved]

7.0 Reagents and Standards [Reserved]

8.0 Sample Collection, Preservation, Storage, and Transport [Reserved]

9.0 Quality Control [Reserved]

10.0 Calibration and Standardization [Reserved]

11.0 Analytical Procedures [Reserved]

12.0 Data Analysis and Calculations

12.1 Nomenclature

B_{wa}=Moisture fraction of ambient air, percent.

B_{ws}=Moisture fraction of effluent gas, percent.

%C=Concentration of carbon from an ultimate analysis of fuel, weight percent.

C_d=Pollutant concentration, dry basis, ng/scm (lb/scf)

$\%CO_{2d}$,$\%CO_{2w}$=Concentration of carbon dioxide on a dry and wet basis, respectively, percent.

C_w=Pollutant concentration, wet basis, ng/scm (lb/scf).

D=Number of sampling periods during the performance test period.

E=Pollutant emission rate, ng/J (lb/million Btu).

E_a=Average pollutant rate for the specified performance test period, ng/J (lb/million Btu).

E_{ao}, E_{ai}=Average pollutant rate of the control device, outlet and inlet, respectively, for the performance test period, ng/J (lb/million Btu).

E_{bi}=Pollutant rate from the steam generating unit, ng/J (lb/million Btu)

E_{bo}=Pollutant emission rate from the steam generating unit, ng/J (lb/million Btu).

E_{ci}=Pollutant rate in combined effluent, ng/J (lb/million Btu).

E_{co}=Pollutant emission rate in combined effluent, ng/J (lb/million Btu).

E_d=Average pollutant rate for each sampling period (*e.g.*, 24-hr Method 6B sample or 24-hr fuel sample) or for each fuel lot (*e.g.*, amount of fuel bunkered), ng/J (lb/million Btu).

E_{di}=Average inlet SO_2 rate for each sampling period d, ng/J (lb/million Btu)

E_g=Pollutant rate from gas turbine, ng/J (lb/million Btu).

E_{ga}=Daily geometric average pollutant rate, ng/J (lbs/million Btu) or ppm corrected to 7 percent O_2.

E_{jo},E_{ji}=Matched pair hourly arithmetic average pollutant rate, outlet and inlet, respectively, ng/J (lb/million Btu) or ppm corrected to 7 percent O_2.

E_h=Hourly average pollutant, ng/J (lb/million Btu).

E_{hj}=Hourly arithmetic average pollutant rate for hour ''j,'' ng/J (lb/million Btu) or ppm corrected to 7 percent O_2.

EXP=Natural logarithmic base (2.718) raised to the value enclosed by brackets.

F_d, F_w, F_c=Volumes of combustion components per unit of heat content, scm/J (scf/million Btu).

GCV=Gross calorific value of the fuel consistent with the ultimate analysis, kJ/kg (Btu/lb).

GCV_p, GCV_r=Gross calorific value for the product and raw fuel lots, respectively, dry basis, kJ/kg (Btu/lb).

%H=Concentration of hydrogen from an ultimate analysis of fuel, weight percent.

H=Total number of operating hours for which pollutant rates are determined in the performance test period.

H_b=Heat input rate to the steam generating unit from fuels fired in the steam generating unit, J/hr (million Btu/hr).

H_g=Heat input rate to gas turbine from all fuels fired in the gas turbine, J/hr (million Btu/hr).

$\%H_2O$=Concentration of water from an ultimate analysis of fuel, weight percent.

H_r=Total numbers of hours in the performance test period (*e.g.*, 720 hours for 30-day performance test period).

K=Conversion factor, 10^{-5} (kJ/J)/(%) [10^6 Btu/million Btu].

K_c=(9.57 scm/kg)/% [(1.53 scf/lb)/%].

K_{cc}=(2.0 scm/kg)/% [(0.321 scf/lb)/%].

K_{hd}=(22.7 scm/kg)/% [(3.64 scf/lb)/%].

K_{hw}=(34.74 scm/kg)/% [(5.57 scf/lb)/%].

K_n=(0.86 scm/kg)/% [(0.14 scf/lb)/%].

K_o=(2.85 scm/kg)/% [(0.46 scf/lb)/%].

K_s=(3.54 scm/kg)/% [(0.57 scf/lb)/%].

K_w=(1.30 scm/kg)/% [(0.21 scf/lb)/%].

ln=Natural log of indicated value.

L_p,L_r=Weight of the product and raw fuel lots, respectively, metric ton (ton).

%N=Concentration of nitrogen from an ultimate analysis of fuel, weight percent.

N=Number of fuel lots during the averaging period.

n=Number of fuels being burned in combination.

n_d=Number of operating hours of the affected facility within the performance test period for each E_d determined.

n_t=Total number of hourly averages for which paired inlet and outlet pollutant rates are available within the 24-hr midnight to midnight daily period.

%O=Concentration of oxygen from an ultimate analysis of fuel, weight percent.

$\%O_{2d}$, $\%O_{2w}$=Concentration of oxygen on a dry and wet basis, respectively, percent.

P_s=Potential SO_2 emissions, percent.

$\%R_f$=SO_2 removal efficiency from fuel pretreatment, percent.

$\%R_g$=SO_2 removal efficiency of the control device, percent.

$\%R_{ga}$=Daily geometric average percent reduction.

$\%R_o$=Overall SO_2 reduction, percent.

%S=Sulfur content of as-fired fuel lot, dry basis, weight percent.

S_e=Standard deviation of the hourly average pollutant rates for each performance test period, ng/J (lb/million Btu).

$\%S_f$=Concentration of sulfur from an ultimate analysis of fuel, weight percent.

S_i=Standard deviation of the hourly average inlet pollutant rates for each performance test period, ng/J (lb/million Btu).

S_o=Standard deviation of the hourly average emission rates for each performance test period, ng/J (lb/million Btu).

$\%S_p$, $\%S_r$=Sulfur content of the product and raw fuel lots respectively, dry basis, weight percent.

$t_{0.95}$=Values shown in Table 19–3 for the indicated number of data points n.

X_k=Fraction of total heat input from each type of fuel k.

12.2 Emission Rates of PM, SO_2, and NO_X. Select from the following sections the applicable procedure to compute the PM, S_{O2}, or NO_X emission rate (E) in ng/J (lb/million Btu). The pollutant concentration must be in ng/scm (lb/scf) and the F factor must be in scm/J (scf/million Btu). If the pollutant concentration (C) is not in the appropriate units, use Table 19–1 in Section 17.0 to make the proper conversion. An F factor is the ratio of the gas volume of the products of combustion to the heat content of the fuel. The dry F factor (F_d) includes all components of combustion less water, the wet F factor (F_w) includes all components of combustion, and the carbon F factor (F_c) includes only carbon dioxide.

NOTE: Since F_w factors include water resulting only from the combustion of hydrogen in the fuel, the procedures using F_w factors are not applicable for computing E from steam generating units with wet scrubbers or with other processes that add water (*e.g.*, steam injection).

12.2.1 Oxygen-Based F Factor, Dry Basis. When measurements are on a dry basis for both O ($\%O_{2d}$) and pollutant (C_d) concentrations, use the following equation:

$$E = C_d F_d \frac{20.9}{\left(20.9 - \%O_{2d}\right)} \qquad \text{Eq. 19-1}$$

12.2.2 Oxygen-Based F Factor, Wet Basis. When measurements are on a wet basis for both O_2 ($\%O_{2w}$) and pollutant (C_w) concentrations, use either of the following:

12.2.2.1 If the moisture fraction of ambient air (B_{wa}) is measured:

$$E = C_w F_w \frac{20.9}{\left[20.9\left(1 - B_{wa}\right) - \%O_{2w}\right]} \qquad \text{Eq. 19-2}$$

Instead of actual measurement, B_{wa} may be estimated according to the procedure below.

NOTE: The estimates are selected to ensure that negative errors will not be larger than −1.5 percent. However, positive errors, or over-estimation of emissions by as much as 5 percent may be introduced depending upon the geographic location of the facility and the associated range of ambient moisture.

12.2.2.1.1 B_{wa}=0.027. This value may be used at any location at all times.

12.2.2.1.2 B_{wa}=Highest monthly average of B_{wa} that occurred within the previous calendar year at the nearest Weather Service Station. This value shall be determined annually and may be used as an estimate for the entire current calendar year.

12.2.2.1.3 B_{wa}=Highest daily average of Bwa that occurred within a calendar month at the nearest Weather Service Station, calculated from the data from the past 3 years. This value shall be computed for each month and may be used as an estimate for the current respective calendar month.

12.2.2.2 If the moisture fraction (B_{ws}) of the effluent gas is measured:

$$E = C_w F_d \frac{20.9}{\left[20.9\left(1 - B_{ws}\right) - \%O_{2w}\right]} \qquad \text{Eq. 19-3}$$

12.2.3 Oxygen-Based F Factor, Dry/Wet Basis.

12.2.3.1 When the pollutant concentration is measured on a wet basis (C_w) and O_2 concentration is measured on a dry basis ($\%O_{2d}$), use the following equation:

$$E = \frac{\left(C_w F_d\right)(20.9)}{\left(1 - B_{ws}\right)\left(20.9 - \%O_{2d}\right)} \qquad \text{Eq. 19-4}$$

12.2.3.2 When the pollutant concentration is measured on a dry basis (C_d) and the O_2 concentration is measured on a wet basis ($\%O_{2w}$), use the following equation:

$$E = \frac{C_d F_d 20.9}{\dfrac{\left(20.9 - \%O_{2w}\right)}{\left(1 - B_{ws}\right)}} \qquad \text{Eq. 19-5}$$

12.2.4 Carbon Dioxide-Based F Factor, Dry Basis. When measurements are on a dry basis for both CO_2 ($\%CO_{2d}$) and pollutant (C_d) concentrations, use the following equation:

$$E = C_d F_c \frac{100}{\%CO_{2d}} \qquad \text{Eq. 19-6}$$

12.2.5 Carbon Dioxide-Based F Factor, Wet Basis. When measurements are on a wet basis for both CO_2 ($\%CO_{2w}$) and pollutant (C_w) concentrations, use the following equation:

$$E = C_w F_c \frac{100}{\%CO_{2w}} \qquad \text{Eq. 19-7}$$

12.2.6 Carbon Dioxide-Based F Factor, Dry/Wet Basis.

12.2.6.1 When the pollutant concentration is measured on a wet basis (C_w) and CO_2 concentration is measured on a dry basis ($\%CO_{2d}$), use the following equation:

$$E = \frac{C_w F_c}{\left(1 - B_{ws}\right)} \frac{100}{\%CO_{2d}} \qquad \text{Eq. 19-8}$$

12.2.6.2 When the pollutant concentration is measured on a dry basis (C_d) and CO_2 concentration is measured on a wet basis ($\%CO_{2w}$), use the following equation:

$$E = C_d F_c \left(1 - B_{ws}\right) \frac{100}{\%CO_{2w}} \qquad \text{Eq. 19-9}$$

12.2.7 Direct-Fired Reheat Fuel Burning. The effect of direct-fired reheat fuel burning (for the purpose of raising the temperature of the exhaust effluent from wet scrubbers to above the moisture dew-point) on emission rates will be less than 1.0 percent and, therefore, may be ignored.

12.2.8 Combined Cycle-Gas Turbine Systems. For gas turbine-steam generator combined cycle systems, determine the emissions from the steam generating unit or the percent reduction in potential SO_2 emissions as follows:

12.2.8.1 Compute the emission rate from the steam generating unit using the following equation:

$$E_{bo} = E_{co} + \frac{H_g}{H_b}\left(E_{co} - E_g\right) \qquad \text{Eq. 19-10}$$

12.2.8.1.1 Use the test methods and procedures section of 40 CFR Part 60, Subpart GG to obtain E_{co} and E_g. Do not use F_w factors for determining E_g or E_{co}. If an SO_2 control device is used, measure E_{co} after the control device.

12.2.8.1.2 Suitable methods shall be used to determine the heat input rates to the steam generating units (H_b) and the gas turbine (H_g).

12.2.8.2 If a control device is used, compute the percent of potential SO_2 emissions (P_s) using the following equations:

$$E_{bi} = E_{ci} - \frac{H_g}{H_b}\left(E_{ci} - E_g\right) \qquad \text{Eq. 19-11}$$

$$P_s = 100\left(1 - \frac{E_{bo}}{E_{bi}}\right) \qquad \text{Eq. 19-12}$$

NOTE: Use the test methods and procedures section of Subpart GG to obtain E_{ci} and E_g. Do not use F_w factors for determining E_g or E_{ci}.

12.3 F Factors. Use an average F factor according to Section 12.3.1 or determine an applicable F factor according to Section 12.3.2. If combined fuels are fired, prorate the applicable F factors using the procedure in Section 12.3.3.

12.3.1 Average F Factors. Average F factors (F_d, F_w, or F_c) from Table 19–2 in Section 17.0 may be used.

12.3.2 Determined F Factors. If the fuel burned is not listed in Table 19–2 or if the owner or operator chooses to determine an F factor rather than use the values in Table 19–2, use the procedure below:

12.3.2.1 Equations. Use the equations below, as appropriate, to compute the F factors:

$$F_d = \frac{K\left(K_{hd}\%H + K_c\%C + K_s\%S + K_n\%N - K_o\%O\right)}{GCV} \qquad \text{Eq. 19-13}$$

$$F_w = \frac{K\left[K_{hw}\%H + K_c\%C + K_s\%S + K_n\%N - K_o\%O + K_w\%H_2O\right]}{GCV_w} \qquad \text{Eq. 19-14}$$

$$F_c = \frac{K\left(K_{cc}\%C\right)}{GCV} \qquad \text{Eq. 19-15}$$

NOTE: Omit the $\%H_2O$ term in the equations for F_w if %H and %O include the unavailable hydrogen and oxygen in the form of H_2O.)

12.3.2.2 Use applicable sampling procedures in Section 12.5.2.1 or 12.5.2.2 to obtain samples for analyses.

12.3.2.3 Use ASTM D 3176–74 or 89 (all cited ASTM standards are incorporated by reference—see §60.17) for ultimate analysis of the fuel.

12.3.2.4 Use applicable methods in Section 12.5.2.1 or 12.5.2.2 to determine the heat content of solid or liquid fuels. For gaseous fuels, use ASTM D 1826–77 or 94 (incorporated by reference—see §60.17) to determine the heat content.

12.3.3 F Factors for Combination of Fuels. If combinations of fuels are burned, use the following equations, as applicable unless otherwise specified in an applicable subpart:

$$F_d = \sum_{k=1}^{n}\left(X_k F_{dk}\right) \qquad \text{Eq. 19-16}$$

$$F_w = \sum_{k=1}^{n}\left(X_k F_{wk}\right) \qquad \text{Eq. 19-17}$$

$$F_c = \sum_{k=1}^{n}\left(X_k F_{ck}\right) \qquad \text{Eq. 19-18}$$

12.4 Determination of Average Pollutant Rates.

12.4.1 Average Pollutant Rates from Hourly Values. When hourly average pollutant rates (E_h), inlet or outlet, are obtained (*e.g.*, CEMS values), compute the average pollutant rate (E_a) for the performance test period (*e.g.*, 30 days) specified in the applicable regulation using the following equation:

$$E_a = \frac{1}{H}\sum_{j=1}^{n} E_{hj} \qquad \text{Eq. 19-19}$$

12.4.2 Average Pollutant Rates from Other than Hourly Averages. When pollutant rates are determined from measured values representing longer than 1-hour periods (*e.g.*, daily fuel sampling and analyses or Method 6B values), or when pollutant rates are determined from combinations of 1-hour and longer than 1-hour periods (*e.g.*, CEMS and Method 6B values), compute the average pollutant rate (E_a) for the performance test period (*e.g.*, 30 days) specified in the applicable regulation using the following equation:

$$E_a = \frac{\sum_{j=1}^{D}\left(n_d E_d\right)_j}{\sum_{j=1}^{D} n_{dj}} \qquad \text{Eq. 19-20}$$

12.4.3 Daily Geometric Average Pollutant Rates from Hourly Values. The geometric average pollutant rate (E_{ga}) is computed using the following equation:

$$E_{ga} = \exp\left[\frac{1}{n_t}\sum_{j=1}^{n_t}\left[\ln\left(E_{hj}\right)\right]\right] \qquad \text{Eq. 19-21}$$

12.5 Determination of Overall Reduction in Potential Sulfur Dioxide Emission.

12.5.1 Overall Percent Reduction. Compute the overall percent SO_2 reduction ($\%R_o$) using the following equation:

$$\%R_o = 100\left[1.0 - \left(1.0 - \frac{\%R_f}{100}\right)\left(1.0 - \frac{\%R_g}{100}\right)\right] \qquad \text{Eq. 19-22}$$

12.5.2 Pretreatment Removal Efficiency (Optional). Compute the SO_2 removal efficiency from fuel pretreatment ($\%R_f$) for the averaging period (*e.g.*, 90 days) as specified in the applicable regulation using the following equation:

$$\%R_f = 100\left[1.0 - \frac{\sum_{j=1}^{N}\left(\frac{\%S_{pj}}{GCV_{pj}}\right)L_{pj}}{\sum_{j=1}^{N}\left(\frac{\%S_{rj}}{GCV_{rj}}\right)L_{rj}}\right] \qquad \text{Eq. 19-23}$$

NOTE: In calculating $\%R_f$, include %S and GCV values for all fuel lots that are not pretreated and are used during the averaging period.

12.5.2.1 Solid Fossil (Including Waste) Fuel/Sampling and Analysis.

NOTE: For the purposes of this method, raw fuel (coal or oil) is the fuel delivered to the desulfurization (pretreatment) facility. For oil, the input oil to the oil desulfurization process (*e.g.*, hydrotreatment) is considered to be the raw fuel.

12.5.2.1.1 Sample Increment Collection. Use ASTM D 2234–76, 96, 97a, or 98 (incorporated by reference—see §60.17), Type I, Conditions A, B, or C, and systematic spacing. As used in this method, systematic spacing is intended to include evenly spaced increments in time or increments based on equal weights of coal passing the collection area. As a minimum, determine the number and weight of increments required per gross sample representing each coal lot according to Table 2 or Paragraph 7.1.5.2 of ASTM D 2234. Collect one gross sample for each lot of raw coal and one gross sample for each lot of product coal.

12.5.2.1.2 ASTM Lot Size. For the purpose of Section 12.5.2 (fuel pretreatment), the lot size of product coal is the weight of product coal from one type of raw coal. The lot size of raw coal is the weight of raw coal used to produce one lot of product coal. Typically, the lot size is the weight of coal processed in a 1-day (24-hour) period. If more than one type of coal is treated and produced in 1 day, then gross samples must be collected and analyzed for each type of coal. A coal lot size equaling the 90-day quarterly fuel quantity for a steam generating unit may be used if representative sampling can be conducted for each raw coal and product coal.

NOTE: Alternative definitions of lot sizes may be used, subject to prior approval of the Administrator.

12.5.2.1.3 Gross Sample Analysis. Use ASTM D 2013–72 or 86 to prepare the sample, ASTM D 3177–75 or 89 or ASTM D 4239–85, 94, or 97 to determine sulfur content (%S), ASTM D 3173–73 or 87 to determine moisture content, and ASTM D 2015–77 (Reapproved 1978) or 96, D 3286–85 or 96, or D 5865–98 to determine gross calorific value (GCV) (all standards cited are incorporated by reference—see §60.17 for acceptable versions of the standards) on a dry basis for each gross sample.

12.5.2.2 Liquid Fossil Fuel-Sampling and Analysis. See Note under Section 12.5.2.1.

12.5.2.2.1 Sample Collection. Follow the procedures for continuous sampling in ASTM D 270 or D 4177–95 (incorporated by reference—see §60.17) for each gross sample from each fuel lot.

12.5.2.2.2 Lot Size. For the purpose of Section 12.5.2 (fuel pretreatment), the lot size of a product oil is the weight of product oil from one pretreatment facility and intended as one shipment (ship load, barge load, etc.). The lot size of raw oil is the weight of each crude liquid fuel type used to produce a lot of product oil.

NOTE: Alternative definitions of lot sizes may be used, subject to prior approval of the Administrator.

12.5.2.2.3 Sample Analysis. Use ASTM D 129–64, 78, or 95, ASTM D 1552–83 or 95, or ASTM D 4057–81 or 95 to determine the sulfur content (%S) and ASTM D 240–76 or 92 (all standards cited are incorporated by reference—see §60.17) to determine the GCV of

each gross sample. These values may be assumed to be on a dry basis. The owner or operator of an affected facility may elect to determine the GCV by sampling the oil combusted on the first steam generating unit operating day of each calendar month and then using the lowest GCV value of the three GCV values per quarter for the GCV of all oil combusted in that calendar quarter.

12.5.2.3 Use appropriate procedures, subject to the approval of the Administrator, to determine the fraction of total mass input derived from each type of fuel.

12.5.3 Control Device Removal Efficiency. Compute the percent removal efficiency ($\%R_g$) of the control device using the following equation:

$$\%R_g = 100\left(1.0 - \frac{E_{ao}}{E_{ai}}\right) \qquad \text{Eq. 19-24}$$

12.5.3.1 Use continuous emission monitoring systems or test methods, as appropriate, to determine the outlet SO_2 rates and, if appropriate, the inlet SO_2 rates. The rates may be determined as hourly (E_h) or other sampling period averages (E_d). Then, compute the average pollutant rates for the performance test period (E_{ao} and E_{ai}) using the procedures in Section 12.4.

12.5.3.2 As an alternative, as-fired fuel sampling and analysis may be used to determine inlet SO_2 rates as follows:

12.5.3.2.1 Compute the average inlet SO_2 rate (E_{di}) for each sampling period using the following equation:

$$E_{di} = K\frac{\%S}{GCV} \qquad \text{Eq. 19-25}$$

Where:

$$K = 2\times10^7\left(\frac{\text{ng } SO_2}{\%S}\right)\left(\frac{(kJ)}{J}\right)\left(\frac{1}{\text{kg coal}}\right)\left[2\times10^4\left(\frac{\text{lb } SO_2}{\%S}\right)\left(\frac{\text{Btu}}{\text{million Btu}}\right)\left(\frac{1}{\text{lb coal}}\right)\right]$$

After calculating E_{di}, use the procedures in Section 12.4 to determine the average inlet SO_2 rate for the performance test period (E_{ai}).

12.5.3.2.2 Collect the fuel samples from a location in the fuel handling system that provides a sample representative of the fuel bunkered or consumed during a steam generating unit operating day. For the purpose of as-fired fuel sampling under Section 12.5.3.2 or Section 12.6, the lot size for coal is the weight of coal bunkered or consumed during each steam generating unit operating day. The lot size for oil is the weight of oil supplied to the ''day'' tank or consumed during each steam generating unit operating day. For reporting and calculation purposes, the gross sample shall be identified with the calendar day on which sampling began. For steam generating unit operating days when a coal-fired steam generating unit is operated without coal being added to the bunkers, the coal analysis from the previous ''as bunkered'' coal sample shall be used until coal is bunkered again. For steam generating unit operating days when an oil-fired steam generating unit is operated without oil being added to the oil ''day'' tank, the oil analysis from the previous day shall be used until the ''day'' tank is filled again. Alternative definitions of fuel lot size may be used, subject to prior approval of the Administrator.

12.5.3.2.3 Use ASTM procedures specified in Section 12.5.2.1 or 12.5.2.2 to determine %S and GCV.

12.5.4 Daily Geometric Average Percent Reduction from Hourly Values. The geometric average percent reduction ($\%R_{ga}$) is computed using the following equation:

$$\%R_{ga} = 100\left[1 - EXP\left(\frac{1}{n_t}\sum_{j=1}^{n_t} \ln\frac{E_{jo}}{E_{ji}}\right)\right] \qquad \text{Eq. 19-26}$$

NOTE: The calculation includes only paired data sets (hourly average) for the inlet and outlet pollutant measurements.

12.6 Sulfur Retention Credit for Compliance Fuel. If fuel sampling and analysis procedures in Section 12.5.2.1 are being used to determine average SO_2 emission rates (E_{as}) to the atmosphere from a coal-fired steam generating unit when there is no SO_2 control device, the following equation may be used to adjust the emission rate for sulfur retention credits (no credits are allowed for oil-fired

systems) (E_{di}) for each sampling period using the following equation:

$$E_{di} = 0.97K \frac{\%S}{GDV} \qquad \text{Eq. 19-27}$$

Where:

$$K = 2\times10^{7}\left(\frac{\text{ng } SO_2}{\%S}\right)\left(\frac{kJ}{J}\right)\left(\frac{1}{\text{kg coal}}\right)\left[2\times10^{4}\left(\frac{\text{lb } SO_2}{\%S}\right)\left(\frac{\text{Btu}}{\text{million Btu}}\right)\left(\frac{1}{\text{lb coal}}\right)\right]$$

After calculating E_{di}, use the procedures in Section 12.4.2 to determine the average SO_2 emission rate to the atmosphere for the performance test period (E_{ao}).

12.7 Determination of Compliance When Minimum Data Requirement Is Not Met.

12.7.1 Adjusted Emission Rates and Control Device Removal Efficiency. When the minimum data requirement is not met, the Administrator may use the following adjusted emission rates or control device removal efficiencies to determine compliance with the applicable standards.

12.7.1.1 Emission Rate. Compliance with the emission rate standard may be determined by using the lower confidence limit of the emission rate (E_{ao}*) as follows:

$$E_{ao}^{*} = E_{ao} - t_{0.95} S_o \qquad \text{Eq. 19-28}$$

12.7.1.2 Control Device Removal Efficiency. Compliance with the overall emission reduction ($\%R_o$) may be determined by using the lower confidence limit of the emission rate (E_{ao}*) and the upper confidence limit of the inlet pollutant rate (E_{ai}*) in calculating the control device removal efficiency ($\%R_g$) as follows:

$$\%R_g = 100\left(1.0 - \frac{E_{ao}^{*}}{E_{ai}^{*}}\right) \qquad \text{Eq. 19-29}$$

$$E_{ai}^{*} = E_{ai} + t_{0.95} S_i \qquad \text{Eq. 19-30}$$

12.7.2 Standard Deviation of Hourly Average Pollutant Rates. Compute the standard deviation (S_e) of the hourly average pollutant rates using the following equation:

$$S_e = \sqrt{\frac{1}{H} - \frac{1}{H_r}}\sqrt{\frac{\sum_{j=1}^{H}\left(E_{hj} - E_a\right)^2}{H-1}} \qquad \text{Eq. 19-31}$$

Equation 19–19 through 19–31 may be used to compute the standard deviation for both the outlet (S_o) and, if applicable, inlet (S_i) pollutant rates.

13.0 Method Performance [Reserved]

14.0 Pollution Prevention [Reserved]

15.0 Waste Management [Reserved]

16.0 References [Reserved]

17.0 Tables, Diagrams, Flowcharts, and Validation Data

TABLE 19–1—CONVERSION FACTORS FOR CONCENTRATION

From	To	Multiply by
g/scm	ng/scm	10^9
mg/scm	ng/scm	10^6
lb/scf	ng/scm	1.602×10^{13}
ppm SO_2	ng/scm	2.66×10^6
ppm NO_X	ng/scm	1.912×10^6
ppm SO_2	lb/scf	1.660×10^{-7}
ppm NO_X	lb/scf	1.194×10^{-7}

TABLE 19–2—F FACTORS FOR VARIOUS FUELS[1]

Fuel Type	F_d		F_w		F_c	
	dscm/J	dscf/10^6 Btu	wscm/J	wscf/10^6 Btu	scm/J	scf/10^6 Btu
Coal:						
Anthracite[2]	2.71×10^{-7}	10,100	2.83×10^{-7}	10,540	0.530×10^{-7}	1,970
Bituminus[2]	2.63×10^{-7}	9,780	2.86×10^{-7}	10,640	0.484×10^{-7}	1,800
Lignite	2.65×10^{-7}	9,860	3.21×10^{-7}	11,950	0.513×10^{-7}	1,910
Oil[3]	2.47×10^{-7}	9,190	2.77×10^{-7}	10,320	0.383×10^{-7}	1,420
Gas:.						
Natural	2.34×10^{-7}	8,710	2.85×10^{-7}	10,610	0.287×10^{-7}	1,040
Propane	2.34×10^{-7}	8,710	2.74×10^{-7}	10,200	0.321×10^{-7}	1,190
Butane	2.34×10^{-7}	8,710	2.79×10^{-7}	10,390	0.337×10^{-7}	1,250
Wood	2.48×10^{-7}	9,240	.....	.....	0.492×10^{-7}	1,830
Wood Bark	2.58×10^{-7}	9,600	.....	.....	0.516×10^{-7}	1,920
Municipal	2.57×10^{-7}	9,570	.....	.....	0.488×10^{-7}	1,820
Solid Waste	.....	.....	.....	.....	.....	.....

[1] Determined at standard conditions: 20 °C (68 °F) and 760 mm Hg (29.92 in Hg)
[2] As classified according to ASTM D 388.
[3] Crude, residual, or distillate.

TABLE 19–3—VALUES FOR $T_{0.95*}$

n[1]	$t_{0.95}$	n[1]	$t_{0.95}$	n[1]	$t_{0.95}$
2	6.31	8	1.89	22–26	1.71
3	2.42	9	1.86	27–31	1.70
4	2.35	10	1.83	32–51	1.68
5	2.13	11	1.81	52–91	1.67
6	2.02	12–16	1.77	92–151	1.66
7	1.94	17–21	1.73	152 or more	1.65

[1]The values of this table are corrected for n-1 degrees of freedom. Use n equal to the number (H) of hourly average data points.

METHOD 20—DETERMINATION OF NITROGEN OXIDES, SULFUR DIOXIDE, AND DILUENT EMISSIONS FROM STATIONARY GAS TURBINES

1.0 Scope and Application

What is Method 20?

Method 20 contains the details you must follow when using an instrumental analyzer to determine concentrations of nitrogen oxides, oxygen, carbon dioxide, and sulfur dioxide in the emissions from stationary gas turbines. This method follows the specific instructions for equipment and performance requirements, supplies, sample collection and analysis, calculations, and data analysis in the methods listed in Section 2.0.

1.1 Analytes. What does this method determine?

Analyte	CAS No.	Sensitivity
Nitrogen oxides (NO_X) as nitrogen dioxide:	10102–43–9	Typically <2% of Calibration Span.
Nitric oxide (NO)	10102–44–0	
Nitrogen dioxide NO_2.		
Diluent oxygen (O_2) or carbon dioxide (CO_2)	.....	Typically <2% of Calibration Span.
Sulfur dioxide (SO_X)	7446–09–5	Typically <2% of Calibration Span.

1.2 Applicability. When is this method required? The use of Method 20 may be required by specific New Source Performance Standards, Clean Air Marketing rules, and State Implementation Plans and permits where measuring SO_2, NO_X, CO_2, and/or O_2 concentrations in stationary gas turbines emissions are required. Other regulations may also require its use.

1.3 Data Quality Objectives. How good must my collected data be? Refer to Section 1.3 of Method 7E.

2.0 Summary of Method

In this method, NO_X, O_2 (or CO_2), and SO_X are measured using the following methods found in appendix A to this part:

(a) Method 1—Sample and Velocity Traverses for Stationary Sources.

(b) Method 3A—Determination of Oxygen and Carbon Dioxide Emissions From Stationary Sources (Instrumental Analyzer Procedure).

(c) Method 6C—Determination of Sulfur Dioxide Emissions From Stationary Sources (Instrumental Analyzer Procedure).

(d) Method 7E—Determination of Nitrogen Oxides Emissions From Stationary Sources (Instrumental Analyzer Procedure).

(e) Method 19—Determination of Sulfur Dioxide Removal Efficiency and Particulate Matter, Sulfur Dioxide, and Nitrogen Oxide Emission Rates.

3.0 Definitions

Refer to Section 3.0 of Method 7E for the applicable definitions.

4.0 Interferences

Refer to Section 4.0 of Methods 3A, 6C, and 7E as applicable.

5.0 Safety

Refer to Section 5.0 of Method 7E.

6.0 Equipment and Supplies

The measurement system design is shown in Figure 7E–1 of Method 7E. Refer to the appropriate methods listed in Section 2.0 for equipment and supplies.

7.0 Reagents and Standards

Refer to the appropriate methods listed in Section 2.0 for reagents and standards.

8.0 Sample Collection, Preservation, Storage, and Transport

8.1 Sampling Site and Sampling Points. Follow the procedures of Section 8.1 of Method 7E. For the stratification test in Section 8.1.2, determine the diluent-corrected pollutant concentration at each traverse point.

8.2 Initial Measurement System Performance Tests. You must refer to the appropriate methods listed in Section 2.0 for the measurement system performance tests as applicable.

8.3 Interference Check. You must follow the procedures in Section 8.3 of Method 3A or 6C, or Section 8.2.7 of Method 7E (as appropriate).

8.4 Sample Collection. You must follow the procedures of Section 8.4 of the appropriate methods listed in Section 2.0. A test run must have a duration of at least 21 minutes.

8.5 Post-Run System Bias Check, Drift Assessment, and Alternative Dynamic Spike Procedure. You must follow the procedures of Sections 8.5 and 8.6 of the appropriate methods listed in Section 2.0. A test run must have a duration of at least 21 minutes.

9.0 Quality Control

Follow quality control procedures in Section 9.0 of Method 7E.

10.0 Calibration and Standardization

Follow the procedures for calibration and standardization in Section 10.0 of Method 7E.

11.0 Analytical Procedures

Because sample collection and analysis are performed together (see Section 8), additional discussion of the analytical procedure is not necessary.

12.0 Calculations and Data Analysis

You must follow the procedures for calculations and data analysis in Section 12.0 of the appropriate method listed in Section 2.0. Follow the procedures in Section 12.0 of Method 19 for calculating fuel-specific F factors, diluent-corrected pollutant concentrations, and emission rates.

13.0 Method Performance

The specifications for the applicable performance checks are the same as in Section 13.0 of Method 7E.

14.0 Pollution Prevention [Reserved]

15.0 Waste Management [Reserved]

16.0 Alternative Procedures

Refer to Section 16.0 of the appropriate method listed in Section 2.0 for alternative procedures.

17.0 References

Refer to Section 17.0 of the appropriate method listed in Section 2.0 for references.

18.0 Tables, Diagrams, Flowcharts, and Validation Data

Refer to Section 18.0 of the appropriate method listed in Section 2.0 for tables, diagrams, flowcharts, and validation data.

METHOD 21—DETERMINATION OF VOLATILE ORGANIC COMPOUND LEAKS

1.0 Scope and Application

1.1 Analytes.

Analyte	CAS No.
Volatile Organic Compounds (VOC).	No CAS number assigned.

1.2 Scope. This method is applicable for the determination of VOC leaks from process equipment. These sources include, but are not limited to, valves, flanges and other connections, pumps and compressors, pressure relief devices, process drains, open-ended valves, pump and compressor seal system degassing vents, accumulator vessel vents, agitator seals, and access door seals.

1.3 Data Quality Objectives. Adherence to the requirements of this method will enhance the quality of the data obtained from air pollutant sampling methods.

2.0 Summary of Method

2.1 A portable instrument is used to detect VOC leaks from individual sources. The instrument detector type is not specified, but it must meet the specifications and performance criteria contained in Section 6.0. A leak definition concentration based on a reference compound is specified in each applicable regulation. This method is intended to locate and classify leaks only, and is not to be used as a direct measure of mass emission rate from individual sources.

3.0 Definitions

3.1 *Calibration gas* means the VOC compound used to adjust the instrument meter reading to a known value. The calibration gas is usually the reference compound at a known concentration approximately equal to the leak definition concentration.

3.2 *Calibration precision* means the degree of agreement between measurements of the same known value, expressed as the relative percentage of the average difference between the meter readings and the known concentration to the known concentration.

3.3 *Leak definition concentration* means the local VOC concentration at the surface of a leak source that indicates that a VOC emission (leak) is present. The leak definition is an instrument meter reading based on a reference compound.

3.4 *No detectable emission* means a local VOC concentration at the surface of a leak source, adjusted for local VOC ambient concentration, that is less than 2.5 percent of the specified leak definition concentration. that indicates that a VOC emission (leak) is not present.

3.5 *Reference compound* means the VOC species selected as the instrument calibration basis for specification of the leak definition concentration. (For example, if a leak definition concentration is 10,000 ppm as methane, then any source emission that results in a local concentration that yields a meter reading of 10,000 on an instrument meter calibrated with methane would be classified as a leak. In this example, the leak definition concentration is 10,000 ppm and the reference compound is methane.)

3.6 *Response factor* means the ratio of the known concentration of a VOC compound to the observed meter reading when measured using an instrument calibrated with the reference compound specified in the applicable regulation.

3.7 *Response time* means the time interval from a step change in VOC concentration at the input of the sampling system to the time at which 90 percent of the corresponding final value is reached as displayed on the instrument readout meter.

4.0 Interferences [Reserved]

5.0 Safety

5.1 Disclaimer. This method may involve hazardous materials, operations, and equipment. This test method may not address all of the safety problems associated with its use. It is the responsibility of the user of this test method to establish appropriate safety and health practices and determine the applicability of regulatory limitations prior to performing this test method.

5.2 Hazardous Pollutants. Several of the compounds, leaks of which may be determined by this method, may be irritating or corrosive to tissues (*e.g.*, heptane) or may be toxic (*e.g.*, benzene, methyl alcohol). Nearly all are fire hazards. Compounds in emissions should be determined through familiarity with the source. Appropriate precautions can be found in reference documents, such as reference No. 4 in Section 16.0.

6.0 Equipment and Supplies

A VOC monitoring instrument meeting the following specifications is required:

6.1 The VOC instrument detector shall respond to the compounds being processed. Detector types that may meet this requirement include, but are not limited to, catalytic oxidation, flame ionization, infrared absorption, and photoionization.

6.2 The instrument shall be capable of measuring the leak definition concentration specified in the regulation.

6.3 The scale of the instrument meter shall be readable to ±2.5 percent of the specified leak definition concentration.

6.4 The instrument shall be equipped with an electrically driven pump to ensure that a sample is provided to the detector at a constant flow rate. The nominal sample flow rate, as measured at the sample probe tip, shall be 0.10 to 3.0 l/min (0.004 to 0.1 ft^3/min) when the probe is fitted with a glass wool plug or filter that may be used to prevent plugging of the instrument.

6.5 The instrument shall be equipped with a probe or probe extension or sampling not to exceed 6.4 mm (¼ in) in outside diameter, with a single end opening for admission of sample.

6.6 The instrument shall be intrinsically safe for operation in explosive atmospheres as defined by the National Electrical Code by the National Fire Prevention Association or other applicable regulatory code for operation in any explosive atmospheres that may be encountered in its use. The instrument shall, at a minimum, be intrinsically safe for Class 1, Division 1 conditions, and/or Class 2, Division 1 conditions, as appropriate, as defined by the example code. The instrument

shall not be operated with any safety device, such as an exhaust flame arrestor, removed.

7.0 Reagents and Standards

7.1 Two gas mixtures are required for instrument calibration and performance evaluation:

7.1.1 Zero Gas. Air, less than 10 parts per million by volume (ppmv) VOC.

7.1.2 Calibration Gas. For each organic species that is to be measured during individual source surveys, obtain or prepare a known standard in air at a concentration approximately equal to the applicable leak definition specified in the regulation.

7.2 Cylinder Gases. If cylinder calibration gas mixtures are used, they must be analyzed and certified by the manufacturer to be within 2 percent accuracy, and a shelf life must be specified. Cylinder standards must be either reanalyzed or replaced at the end of the specified shelf life.

7.3 Prepared Gases. Calibration gases may be prepared by the user according to any accepted gaseous preparation procedure that will yield a mixture accurate to within 2 percent. Prepared standards must be replaced each day of use unless it is demonstrated that degradation does not occur during storage.

7.4 Mixtures with non-Reference Compound Gases. Calibrations may be performed using a compound other than the reference compound. In this case, a conversion factor must be determined for the alternative compound such that the resulting meter readings during source surveys can be converted to reference compound results.

8.0 Sample Collection, Preservation, Storage, and Transport

8.1 Instrument Performance Evaluation. Assemble and start up the instrument according to the manufacturer's instructions for recommended warmup period and preliminary adjustments.

8.1.1 Response Factor. A response factor must be determined for each compound that is to be measured, either by testing or from reference sources. The response factor tests are required before placing the analyzer into service, but do not have to be repeated at subsequent intervals.

8.1.1.1 Calibrate the instrument with the reference compound as specified in the applicable regulation. Introduce the calibration gas mixture to the analyzer and record the observed meter reading. Introduce zero gas until a stable reading is obtained. Make a total of three measurements by alternating between the calibration gas and zero gas. Calculate the response factor for each repetition and the average response factor.

8.1.1.2 The instrument response factors for each of the individual VOC to be measured shall be less than 10 unless otherwise specified in the applicable regulation. When no instrument is available that meets this specification when calibrated with the reference VOC specified in the applicable regulation, the available instrument may be calibrated with one of the VOC to be measured, or any other VOC, so long as the instrument then has a response factor of less than 10 for each of the individual VOC to be measured.

8.1.1.3 Alternatively, if response factors have been published for the compounds of interest for the instrument or detector type, the response factor determination is not required, and existing results may be referenced. Examples of published response factors for flame ionization and catalytic oxidation detectors are included in References 1–3 of Section 17.0.

8.1.2 Calibration Precision. The calibration precision test must be completed prior to placing the analyzer into service and at subsequent 3-month intervals or at the next use, whichever is later.

8.1.2.1 Make a total of three measurements by alternately using zero gas and the specified calibration gas. Record the meter readings. Calculate the average algebraic difference between the meter readings and the known value. Divide this average difference by the known calibration value and multiply by 100 to express the resulting calibration precision as a percentage.

8.1.2.2 The calibration precision shall be equal to or less than 10 percent of the calibration gas value.

8.1.3 Response Time. The response time test is required before placing the instrument into service. If a modification to the sample pumping system or flow configuration is made that would change the response time, a new test is required before further use.

8.1.3.1 Introduce zero gas into the instrument sample probe. When the meter reading has stabilized, switch quickly to the specified calibration gas. After switching, measure the time required to attain 90 percent of the final stable reading. Perform this test sequence three times and record the results. Calculate the average response time.

8.1.3.2 The instrument response time shall be equal to or less than 30 seconds. The instrument pump, dilution probe (if any), sample probe, and probe filter that will be used during testing shall all be in place during the response time determination.

8.2 Instrument Calibration. Calibrate the VOC monitoring instrument according to Section 10.0.

8.3 Individual Source Surveys.

8.3.1 Type I—Leak Definition Based on Concentration. Place the probe inlet at the surface of the component interface where leakage could occur. Move the probe along the interface periphery while observing the instrument readout. If an increased meter

reading is observed, slowly sample the interface where leakage is indicated until the maximum meter reading is obtained. Leave the probe inlet at this maximum reading location for approximately two times the instrument response time. If the maximum observed meter reading is greater than the leak definition in the applicable regulation, record and report the results as specified in the regulation reporting requirements. Examples of the application of this general technique to specific equipment types are:

8.3.1.1 Valves. The most common source of leaks from valves is the seal between the stem and housing. Place the probe at the interface where the stem exits the packing gland and sample the stem circumference. Also, place the probe at the interface of the packing gland take-up flange seat and sample the periphery. In addition, survey valve housings of multipart assembly at the surface of all interfaces where a leak could occur.

8.3.1.2 Flanges and Other Connections. For welded flanges, place the probe at the outer edge of the flange-gasket interface and sample the circumference of the flange. Sample other types of nonpermanent joints (such as threaded connections) with a similar traverse.

8.3.1.3 Pumps and Compressors. Conduct a circumferential traverse at the outer surface of the pump or compressor shaft and seal interface. If the source is a rotating shaft, position the probe inlet within 1 cm of the shaft-seal interface for the survey. If the housing configuration prevents a complete traverse of the shaft periphery, sample all accessible portions. Sample all other joints on the pump or compressor housing where leakage could occur.

8.3.1.4 Pressure Relief Devices. The configuration of most pressure relief devices prevents sampling at the sealing seat interface. For those devices equipped with an enclosed extension, or horn, place the probe inlet at approximately the center of the exhaust area to the atmosphere.

8.3.1.5 Process Drains. For open drains, place the probe inlet at approximately the center of the area open to the atmosphere. For covered drains, place the probe at the surface of the cover interface and conduct a peripheral traverse.

8.3.1.6 Open-ended Lines or Valves. Place the probe inlet at approximately the center of the opening to the atmosphere.

8.3.1.7 Seal System Degassing Vents and Accumulator Vents. Place the probe inlet at approximately the center of the opening to the atmosphere.

8.3.1.8 Access door seals. Place the probe inlet at the surface of the door seal interface and conduct a peripheral traverse.

8.3.2 Type II—''No Detectable Emission''. Determine the local ambient VOC concentration around the source by moving the probe randomly upwind and downwind at a distance of one to two meters from the source. If an interference exists with this determination due to a nearby emission or leak, the local ambient concentration may be determined at distances closer to the source, but in no case shall the distance be less than 25 centimeters. Then move the probe inlet to the surface of the source and determine the concentration as outlined in Section 8.3.1. The difference between these concentrations determines whether there are no detectable emissions. Record and report the results as specified by the regulation. For those cases where the regulation requires a specific device installation, or that specified vents be ducted or piped to a control device, the existence of these conditions shall be visually confirmed. When the regulation also requires that no detectable emissions exist, visual observations and sampling surveys are required. Examples of this technique are:

8.3.2.1 Pump or Compressor Seals. If applicable, determine the type of shaft seal. Perform a survey of the local area ambient VOC concentration and determine if detectable emissions exist as described in Section 8.3.2.

8.3.2.2 Seal System Degassing Vents, Accumulator Vessel Vents, Pressure Relief Devices. If applicable, observe whether or not the applicable ducting or piping exists. Also, determine if any sources exist in the ducting or piping where emissions could occur upstream of the control device. If the required ducting or piping exists and there are no sources where the emissions could be vented to the atmosphere upstream of the control device, then it is presumed that no detectable emissions are present. If there are sources in the ducting or piping where emissions could be vented or sources where leaks could occur, the sampling surveys described in Section 8.3.2 shall be used to determine if detectable emissions exist.

8.3.3 Alternative Screening Procedure.

8.3.3.1 A screening procedure based on the formation of bubbles in a soap solution that is sprayed on a potential leak source may be used for those sources that do not have continuously moving parts, that do not have surface temperatures greater than the boiling point or less than the freezing point of the soap solution, that do not have open areas to the atmosphere that the soap solution cannot bridge, or that do not exhibit evidence of liquid leakage. Sources that have these conditions present must be surveyed using the instrument technique of Section 8.3.1 or 8.3.2.

8.3.3.2 Spray a soap solution over all potential leak sources. The soap solution may be a commercially available leak detection solution or may be prepared using concentrated detergent and water. A pressure sprayer or squeeze bottle may be used to dispense the solution. Observe the potential leak sites to determine if any bubbles are

formed. If no bubbles are observed, the source is presumed to have no detectable emissions or leaks as applicable. If any bubbles are observed, the instrument techniques of Section 8.3.1 or 8.3.2 shall be used to determine if a leak exists, or if the source has detectable emissions, as applicable.

9.0 Quality Control

Section	Quality control measure	Effect
8.1.2	Instrument calibration precision check	Ensure precision and accuracy, respectively, of instrument response to standard.
10.0	Instrument calibration.	

10.0 Calibration and Standardization

10.1 Calibrate the VOC monitoring instrument as follows. After the appropriate warmup period and zero internal calibration procedure, introduce the calibration gas into the instrument sample probe. Adjust the instrument meter readout to correspond to the calibration gas value.

NOTE: If the meter readout cannot be adjusted to the proper value, a malfunction of the analyzer is indicated and corrective actions are necessary before use.

11.0 Analytical Procedures [Reserved]

12.0 Data Analyses and Calculations [Reserved]

13.0 Method Performance [Reserved]

14.0 Pollution Prevention [Reserved]

15.0 Waste Management [Reserved]

16.0 References

1. Dubose, D.A., and G.E. Harris. Response Factors of VOC Analyzers at a Meter Reading of 10,000 ppmv for Selected Organic Compounds. U.S. Environmental Protection Agency, Research Triangle Park, NC. Publication No. EPA 600/2–81051. September 1981.

2. Brown, G.E., *et al.* Response Factors of VOC Analyzers Calibrated with Methane for Selected Organic Compounds. U.S. Environmental Protection Agency, Research Triangle Park, NC. Publication No. EPA 600/2–81–022. May 1981.

3. DuBose, D.A. *et al.* Response of Portable VOC Analyzers to Chemical Mixtures. U.S. Environmental Protection Agency, Research Triangle Park, NC. Publication No. EPA 600/2–81–110. September 1981.

4. Handbook of Hazardous Materials: Fire, Safety, Health. Alliance of American Insurers. Schaumberg, IL. 1983.

17.0 Tables, Diagrams, Flowcharts, and Validation Data [Reserved]

METHOD 22—VISUAL DETERMINATION OF FUGITIVE EMISSIONS FROM MATERIAL SOURCES AND SMOKE EMISSIONS FROM FLARES

NOTE: This method is not inclusive with respect to observer certification. Some material is incorporated by reference from Method 9.

1.0 Scope and Application

This method is applicable for the determination of the frequency of fugitive emissions from stationary sources, only as specified in an applicable subpart of the regulations. This method also is applicable for the determination of the frequency of visible smoke emissions from flares.

2.0 Summary of Method

2.1 Fugitive emissions produced during material processing, handling, and transfer operations or smoke emissions from flares are visually determined by an observer without the aid of instruments.

2.2 This method is used also to determine visible smoke emissions from flares used for combustion of waste process materials.

2.3 This method determines the amount of time that visible emissions occur during the observation period (*i.e.*, the accumulated emission time). This method does not require that the opacity of emissions be determined. Since this procedure requires only the determination of whether visible emissions occur and does not require the determination of opacity levels, observer certification according to the procedures of Method 9 is not required. However, it is necessary that the observer is knowledgeable with respect to the general procedures for determining the presence of visible emissions. At a minimum, the observer must be trained and knowledgeable regarding the effects of background contrast, ambient lighting, observer position relative to lighting, wind, and the presence of uncombined water (condensing water vapor) on the visibility of emissions. This training is to be obtained from written materials found in References 1 and 2 or from the lecture portion of the Method 9 certification course.

3.0 Definitions

3.1 *Emission frequency* means the percentage of time that emissions are visible during the observation period.

3.2 *Emission time* means the accumulated amount of time that emissions are visible during the observation period.

3.3 *Fugitive emissions* means emissions generated by an affected facility which is not collected by a capture system and is released to the atmosphere. This includes emissions that (1) escape capture by process equipment exhaust hoods; (2) are emitted during material transfer; (3) are emitted from buildings housing material processing or handling equipment; or (4) are emitted directly from process equipment.

3.4 *Observation period* means the accumulated time period during which observations are conducted, not to be less than the period specified in the applicable regulation.

3.5 *Smoke emissions* means a pollutant generated by combustion in a flare and occurring immediately downstream of the flame. Smoke occurring within the flame, but not downstream of the flame, is not considered a smoke emission.

4.0 Interferences

4.1 Occasionally, fugitive emissions from sources other than the affected facility (*e.g.*, road dust) may prevent a clear view of the affected facility. This may particularly be a problem during periods of high wind. If the view of the potential emission points is obscured to such a degree that the observer questions the validity of continuing observations, then the observations shall be terminated, and the observer shall clearly note this fact on the data form.

5.0 Safety

5.1 Disclaimer. This method may involve hazardous materials, operations, and equipment. This test method may not address all of the safety problems associated with its use. It is the responsibility of the user of this test method to establish appropriate safety and health practices and determine the applicability of regulatory limitations prior to performing this test method.

6.0 Equipment

6.1 Stopwatches (two). Accumulative type with unit divisions of at least 0.5 seconds.

6.2 Light Meter. Light meter capable of measuring illuminance in the 50 to 200 lux range, required for indoor observations only.

7.0 Reagents and Supplies [Reserved]

8.0 Sample Collection, Preservation, Storage, and Transfer [Reserved]

9.0 Quality Control [Reserved]

10.0 Calibration and Standardization [Reserved]

11.0 Analytical Procedure

11.1 Selection of Observation Location. Survey the affected facility, or the building or structure housing the process to be observed, and determine the locations of potential emissions. If the affected facility is located inside a building, determine an observation location that is consistent with the requirements of the applicable regulation (*i.e.*, outside observation of emissions escaping the building/structure or inside observation of emissions directly emitted from the affected facility process unit). Then select a position that enables a clear view of the potential emission point(s) of the affected facility or of the building or structure housing the affected facility, as appropriate for the applicable subpart. A position at least 4.6 m (15 feet), but not more than 400 m (0.25 miles), from the emission source is recommended. For outdoor locations, select a position where the sunlight is not shining directly in the observer's eyes.

11.2 Field Records.

11.2.1 Outdoor Location. Record the following information on the field data sheet (Figure 22–1): Company name, industry, process unit, observer's name, observer's affiliation, and date. Record also the estimated wind speed, wind direction, and sky condition. Sketch the process unit being observed, and note the observer location relative to the source and the sun. Indicate the potential and actual emission points on the sketch.

11.2.2 Indoor Location. Record the following information on the field data sheet (Figure 22–2): Company name, industry, process unit, observer's name, observer's affiliation, and date. Record as appropriate the type, location, and intensity of lighting on the data sheet. Sketch the process unit being observed, and note the observer location relative to the source. Indicate the potential and actual fugitive emission points on the sketch.

11.3 Indoor Lighting Requirements. For indoor locations, use a light meter to measure the level of illumination at a location as close to the emission source(s) as is feasible. An illumination of greater than 100 lux (10 foot candles) is considered necessary for proper application of this method.

11.4 Observations.

11.4.1 Procedure. Record the clock time when observations begin. Use one stopwatch to monitor the duration of the observation period. Start this stopwatch when the observation period begins. If the observation period is divided into two or more segments by process shutdowns or observer rest breaks (see Section 11.4.3), stop the stopwatch when a break begins and restart the stopwatch without resetting it when the break ends. Stop the stopwatch at the end of the observation period. The accumulated time indicated by this stopwatch is the duration of observation period. When the observation period is completed, record the clock time. During the observation period, continuously watch the emission source. Upon observing an emission (condensed water vapor is not

considered an emission), start the second accumulative stopwatch; stop the watch when the emission stops. Continue this procedure for the entire observation period. The accumulated elapsed time on this stopwatch is the total time emissions were visible during the observation period (*i.e.*, the emission time.)

11.4.2 Observation Period. Choose an observation period of sufficient length to meet the requirements for determining compliance with the emission standard in the applicable subpart of the regulations. When the length of the observation period is specifically stated in the applicable subpart, it may not be necessary to observe the source for this entire period if the emission time required to indicate noncompliance (based on the specified observation period) is observed in a shorter time period. In other words, if the regulation prohibits emissions for more than 6 minutes in any hour, then observations may (optional) be stopped after an emission time of 6 minutes is exceeded. Similarly, when the regulation is expressed as an emission frequency and the regulation prohibits emissions for greater than 10 percent of the time in any hour, then observations may (optional) be terminated after 6 minutes of emission are observed since 6 minutes is 10 percent of an hour. In any case, the observation period shall not be less than 6 minutes in duration. In some cases, the process operation may be intermittent or cyclic. In such cases, it may be convenient for the observation period to coincide with the length of the process cycle.

11.4.3 Observer Rest Breaks. Do not observe emissions continuously for a period of more than 15 to 20 minutes without taking a rest break. For sources requiring observation periods of greater than 20 minutes, the observer shall take a break of not less than 5 minutes and not more than 10 minutes after every 15 to 20 minutes of observation. If continuous observations are desired for extended time periods, two observers can alternate between making observations and taking breaks.

11.5 Recording Observations. Record the accumulated time of the observation period on the data sheet as the observation period duration. Record the accumulated time emissions were observed on the data sheet as the emission time. Record the clock time the observation period began and ended, as well as the clock time any observer breaks began and ended.

12.0 Data Analysis and Calculations

If the applicable subpart requires that the emission rate be expressed as an emission frequency (in percent), determine this value as follows: Divide the accumulated emission time (in seconds) by the duration of the observation period (in seconds) or by any minimum observation period required in the applicable subpart, if the actual observation period is less than the required period, and multiply this quotient by 100.

13.0 Method Performance [Reserved]

14.0 Pollution Prevention [Reserved]

15.0 Waste Management [Reserved]

16.0 References

1. Missan, R., and A. Stein. Guidelines for Evaluation of Visible Emissions Certification, Field Procedures, Legal Aspects, and Background Material. EPA Publication No. EPA–340/1–75–007. April 1975.

2. Wohlschlegel, P., and D.E. Wagoner. Guideline for Development of a Quality Assurance Program: Volume IX—Visual Determination of Opacity Emissions from Stationary Sources. EPA Publication No. EPA–650/4–74–005i. November 1975.

17.0 Tables, Diagrams, Flowcharts, and Validation Data

FUGITIVE OR SMOKE EMISSION INSPECTION
OUTDOOR LOCATION

Company Location Company Rep.	Observer Affiliation Date
Sky Conditions Precipitation	Wind Direction Wind Speed
Industry	Process Unit

Sketch process unit: indicate observer position relative to source; indicate potential emission points and/or actual emission points.

OBSERVATIONS	Clock Time	Observation period duration, min:sec	Accumulated emission time, min:sec
Begin Observation	_____	_____	_____
	_____	_____	_____
	_____	_____	_____
	_____	_____	_____
	_____	_____	_____
	_____	_____	_____
	_____	_____	_____
	_____	_____	_____
	_____	_____	_____
	_____		
End Observation		_____	_____
	_____		

Figure 22-1

FUGITIVE OR SMOKE EMISSION INSPECTION
INDOOR LOCATION

Company Location Company Rep.	Observer Affiliation Date
Industry	Process Unit

Light type (fluorescent, incandescent, natural)
Light location (overhead, behind observer, etc.)
Illuminance (lux or footcandles)
Sketch process unit: indicate observer position relative to source; indicate potential emission points and/or actual emission points.

OBSERVATIONS	Clock Time	Observation period duration, min:sec	Accumulated emission time, min:sec
Begin			
End Observation			

Figure 22-2

METHOD 23—DETERMINATION OF POLYCHLORINATED DIBENZO-P-DIOXINS AND POLYCHLORINATED DIBENZOFURANS FROM STATIONARY SOURCES

1. Applicability and Principle

1.1 Applicability. This method is applicable to the determination of polychlorinated dibenzo-p-dioxins (PCDD's) and polychlorinated dibenzofurans (PCDF's) from stationary sources.

1.2 Principle. A sample is withdrawn from the gas stream isokinetically and collected in the sample probe, on a glass fiber filter, and on a packed column of adsorbent material. The sample cannot be separated into a particle vapor fraction. The PCDD's and

PCDF's are extracted from the sample, separated by high resolution gas chromatography, and measured by high resolution mass spectrometry.

2. Apparatus

2.1 Sampling. A schematic of the sampling train used in this method is shown in Figure 23–1. Sealing greases may not be used in assembling the train. The train is identical to that described in section 2.1 of Method 5 of this appendix with the following additions:

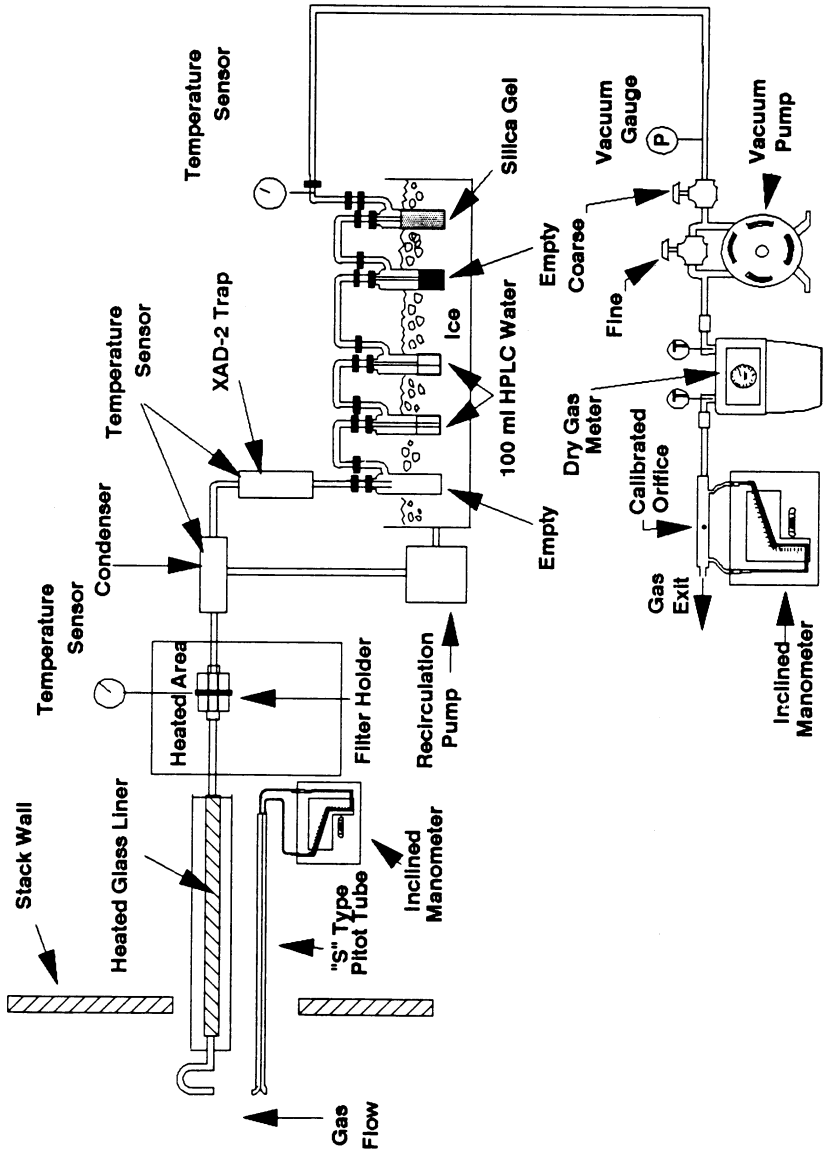

Figure 23.1 Sampling train

2.1.1 Nozzle. The nozzle shall be made of nickel, nickel-plated stainless steel, quartz, or borosilicate glass.

2.1.2 Sample Transfer Lines. The sample transfer lines, if needed, shall be heat traced, heavy walled TFE (½ in. OD with ⅛ in. wall) with connecting fittings that are capable of forming leak-free, vacuum-tight connections without using sealing greases. The line shall be as short as possible and must be maintained at 120 °C.

2.1.1 Filter Support. Teflon or Teflon-coated wire.

2.1.2 Condenser. Glass, coil type with compatible fittings. A schematic diagram is shown in Figure 23–2.

2.1.3 Water Bath. Thermostatically controlled to maintain the gas temperature exiting the condenser at <20 °C (68 °F).

2.1.4 Adsorbent Module. Glass container to hold the solid adsorbent. A shematic diagram is shown in Figure 23–2. Other physical configurations of the resin trap/condenser assembly are acceptable. The connecting fittings shall form leak-free, vacuum tight seals. No sealant greases shall be used in the sampling train. A coarse glass frit is included to retain the adsorbent.

2.2 Sample Recovery.

2.2.1 Fitting Caps. Ground glass, Teflon tape, or aluminum foil (Section 2.2.6) to cap off the sample exposed sections of the train.

2.2.2 Wash Bottles. Teflon, 500-ml.

2.2.3 Probe-Liner Probe-Nozzle, and Filter-Holder Brushes. Inert bristle brushes with precleaned stainless steel or Teflon handles. The probe brush shall have extensions of stainless steel or Teflon, at least as long as the probe. The brushes shall be properly sized and shaped to brush out the nozzle, probe liner, and transfer line, if used.

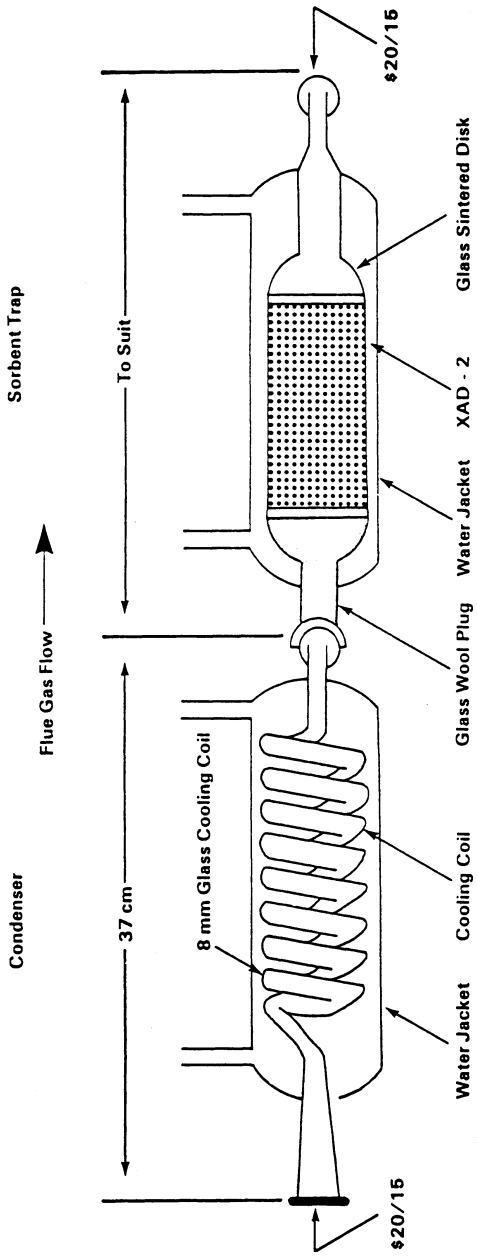

Figure 23.2. Condenser and adsorbent trap

2.2.4 Filter Storage Container. Sealed filter holder, wide-mouth amber glass jar with Teflon-lined cap, or glass petri dish.

2.2.5 Balance. Triple beam.

2.2.6 Aluminum Foil. Heavy duty, hexane-rinsed.

2.2.7 Metal Storage Container. Air tight container to store silica gel.

2.2.8 Graduated Cylinder. Glass, 250-ml with 2-ml graduation.

2.2.9 Glass Sample Storage Container. Amber glass bottle for sample glassware washes, 500- or 1000-ml, with leak free Teflon-lined caps.

2.3 Analysis.

2.3.1 Sample Container. 125- and 250-ml flint glass bottles with Teflon-lined caps.

2.3.2 Test Tube. Glass.

2.3.3 Soxhlet Extraction Apparatus. Capable of holding 43×123 mm extraction thimbles.

2.3.4 Extraction Thimble. Glass, precleaned cellulosic, or glass fiber.

2.3.5 Pasteur Pipettes. For preparing liquid chromatographic columns.

2.3.6 Reacti-vials. Amber glass, 2-ml, silanized prior to use.

2.3.7 Rotary Evaporator. Buchi/Brinkman RF–121 or equivalent.

2.3.8 Nitrogen Evaporative Concentrator. N-Evap Analytical Evaporator Model III or equivalent.

2.3.9 Separatory Funnels. Glass, 2-liter.

2.3.10 Gas Chromatograph. Consisting of the following components:

2.3.10.1 Oven. Capable of maintaining the separation column at the proper operating temperature ±°C and performing programmed increases in temperature at rates of at least 40 °C/min.

2.3.10.2 Temperature Gauge. To monitor column oven, detector, and exhaust temperatures ±1 °C.

2.3.10.3 Flow System. Gas metering system to measure sample, fuel, combustion gas, and carrier gas flows.

2.3.10.4 Capillary Columns. A fused silica column, 60 × 0.25 mm inside diameter (ID), coated with DB–5 and a fused silica column, 30 m × 0.25 mm ID coated with DB–225. Other column systems may be used provided that the user is able to demonstrate using calibration and performance checks that the column system is able to meet the specifications of section 6.1.2.2.

2.3.11 Mass Spectrometer. Capable of routine operation at a resolution of 1:10000 with a stability of ±5 ppm.

2.3.12 Data System. Compatible with the mass spectrometer and capable of monitoring at least five groups of 25 ions.

2.3.13 Analytical Balance. To measure within 0.1 mg.

3. Reagents

3.1 Sampling.

3.1.1 Filters. Glass fiber filters, without organic binder, exhibiting at least 99.95 percent efficiency (<0.05 percent penetration) on 0.3-micron dioctyl phthalate smoke particles. The filter efficiency test shall be conducted in accordance with ASTM Standard Method D 2986–71 (Reapproved 1978) (incorporated by reference—see §60.17).

3.1.1.1 Precleaning. All filters shall be cleaned before their initial use. Place a glass extraction thimble and 1 g of silica gel and a plug of glass wool into a Soxhlet apparatus, charge the apparatus with toluene, and reflux for a minimum of 3 hours. Remove the toluene and discard it, but retain the silica gel. Place no more than 50 filters in the thimble onto the silica gel bed and top with the cleaned glass wool. Charge the Soxhlet with toluene and reflux for 16 hours. After extraction, allow the Soxhlet to cool, remove the filters, and dry them under a clean N_2 stream. Store the filters in a glass petri dish sealed with Teflon tape.

3.1.2 Adsorbent Resin. Amberlite XAD–2 resin. Thoroughly cleaned before initial use.

3.1.2.1 Cleaning Procedure. This procedure may be carried out in a giant Soxhlet extractor. An all-glass filter thimble containing an extra-course frit is used for extraction of XAD–2. The frit is recessed 10–15 mm above a crenelated ring at the bottom of the thimble to facilitate drainage. The resin must be carefully retained in the extractor cup with a glass wool plug and a stainless steel ring because it floats on methylene chloride. This process involves sequential extraction in the following order.

Solvent	Procedure
Water	Initial rinse: Place resin in a beaker, rinse once with water, and discard. Fill with water a second time, let stand overnight, and discard.
Water	Extract with water for 8 hours.
Methanol	Extract for 22 hours.
Methylene Chloride	Extract for 22 hours.
Toluene	Extract for 22 hours.

3.1.2.2 Drying.

3.1.2.2.1 Drying Column. Pyrex pipe, 10.2 cm ID by 0.6 m long, with suitable retainers.

3.1.2.2.2 Procedure. The adsorbent must be dried with clean inert gas. Liquid nitrogen from a standard commercial liquid nitrogen cylinder has proven to be a reliable source of large volumes of gas free from organic contaminants. Connect the liquid nitrogen cylinder to the column by a length of cleaned copper tubing, 0.95 cm ID, coiled to pass through a heat source. A convenient heat source is a water-bath heated from a steam line. The final nitrogen temperature should only be warm to the touch and not over 40 °C. Continue flowing nitrogen through the adsorbent until all the residual solvent is removed. The flow rate should be sufficient to gently agitate the particles but not so excessive as the cause the particles to fracture.

3.1.2.3 Quality Control Check. The adsorbent must be checked for residual toluene.

3.1.2.3.1 Extraction. Weigh 1.0 g sample of dried resin into a small vial, add 3 ml of toluene, cap the vial, and shake it well.

3.1.2.3.2 Analysis. Inject a 2 µl sample of the extract into a gas chromatograph operated under the following conditions:

Column: 6 ft × ⅛ in stainless steel containing 10 percent OV–101 on 100/120 Supelcoport.
Carrier Gas: Helium at a rate of 30 ml/min.
Detector: Flame ionization detector operated at a sensitivity of 4×10^{-11} A/mV.
Injection Port Temperature: 250 °C.
Detector Temperature: 305 °C.
Oven Temperature: 30 °C for 4 min; programmed to rise at 40 °C/min until it reaches 250 °C; return to 30 °C after 17 minutes.

Compare the results of the analysis to the results from the reference solution. Prepare the reference solution by injection 2.5 µl of methylene chloride into 100 ml of toluene. This corresponds to 100 µg of methylene chloride per g of adsorbent. The maximum acceptable concentration is 1000 µg/g of adsorbent. If the adsorbent exceeds this level, drying must be continued until the excess methylene chloride is removed.

3.1.2.4 Storage. The adsorbent must be used within 4 weeks of cleaning. After cleaning, it may be stored in a wide mouth amber glass container with a Teflon-lined cap or placed in one of the glass adsorbent modules tightly sealed with glass stoppers. If precleaned adsorbent is purchased in sealed containers, it must be used within 4 weeks after the seal is broken.

3.1.3 Glass Wool. Cleaned by sequential immersion in three aliquots of methylene chloride, dried in a 110 °C oven, and stored in a methylene chloride-washed glass jar with a Teflon-lined screw cap.

3.1.4 Water. Deionized distilled and stored in a methylene chloride-rinsed glass container with a Teflon-lined screw cap.

3.1.5 Silica Gel. Indicating type, 6 to 16 mesh. If previously used, dry at 175 °C (350 °F) for two hours. New silica gel may be used as received. Alternately other types of desiccants (equivalent or better) may be used, subject to the approval of the Administrator.

3.1.6 Chromic Acid Cleaning Solution. Dissolve 20 g of sodium dichromate in 15 ml of water, and then carefully add 400 ml of concentrated sulfuric acid.

3.2 Sample Recovery.

3.2.2 Acetone. Pesticide quality.

3.2.2 Methylene Chloride. Pesticide qualtity.

3.2.3 Toluene. Pesticide quality.

3.3 Analysis.

3.3.1 Potassium Hydroxide. ACS grade, 2-percent (weight/volume) in water.

3.3.2 Sodium Sulfate. Granulated, reagent grade. Purify prior to use by rinsing with methylene chloride and oven drying. Store the cleaned material in a glass container with a Teflon-lined screw cap.

3.3.3 Sulfuric Acid. Reagent grade.

3.3.4 Sodium Hydroxide. 1.0 N. Weigh 40 g of sodium hydroxide into a 1-liter volumetric flask. Dilute to 1 liter with water.

3.3.5 Hexane. Pesticide grade.

3.3.6 Methylene Chloride. Pesticide grade.

3.3.7 Benzene. Pesticide Grade.

3.3.8 Ethyl Acetate.

3.3.9 Methanol. Pesticide Grade.

3.3.10 Toluene. Pesticide Grade.

3.3.11 Nonane. Pesticide Grade.

3.3.12 Cyclohexane. Pesticide Grade.

3.3.13 Basic Alumina. Activity grade 1, 100–200 mesh. Prior to use, activate the alumina by heating for 16 hours at 130 °C before use. Store in a desiccator. Pre-activated alumina may be purchased from a supplier and may be used as received.

3.3.14 Silica Gel. Bio-Sil A, 100–200 mesh. Prior to use, activate the silica gel by heating for at least 30 minutes at 180 °C. After cooling, rinse the silica gel sequentially with methanol and methylene chloride. Heat the rinsed silica gel at 50 °C for 10 minutes, then increase the temperature gradually to 180 °C over 25 minutes and maintain it at this temperature for 90 minutes. Cool at room temperature and store in a glass container with a Teflon-lined screw cap.

3.3.15 Silica Gel Impregnated with Sulfuric Acid. Combine 100 g of silica gel with 44 g of concentrated sulfuric acid in a screw capped glass bottle and agitate thoroughly. Disperse the solids with a stirring rod until a uniform mixture is obtained. Store the mixture in a glass container with a Teflon-lined screw cap.

3.3.16 Silica Gel Impregnated with Sodium Hydroxide. Combine 39 g of 1 N sodium hydroxide with 100 g of silica gel in a screw capped glass bottle and agitate thoroughly. Disperse solids with a stirring rod until a uniform mixture is obtained. Store the mixture in glass container with a Teflon-lined screw cap.

3.3.17 Carbon/Celite. Combine 10.7 g of AX–21 carbon with 124 g of Celite 545 in a 250-ml glass bottle with a Teflon-lined screw cap. Agitate the mixture thoroughly until a uniform mixture is obtained. Store in the glass container.

3.3.18 Nitrogen. Ultra high purity.

3.3.19 Hydrogen. Ultra high purity.

3.3.20 Internal Standard Solution. Prepare a stock standard solution containing the isotopically labelled PCDD's and PCDF's at the concentrations shown in Table 1 under the heading ''Internal Standards'' in 10 ml of nonane.

3.3.21 Surrogate Standard Solution. Prepare a stock standard solution containing the isotopically labelled PCDD's and PCDF's at the concentrations shown in Table 1 under the heading ''Surrogate Standards'' in 10 ml of nonane.

3.3.22 Recovery Standard Solution. Prepare a stock standard solution containing

the isotopically labelled PCDD's and PCDF's at the concentrations shown in Table 1 under the heading ''Recovery Standards'' in 10 ml of nonane.

4. Procedure

4.1 Sampling. The complexity of this method is such that, in order to obtain reliable results, testers should be trained and experienced with the test procedures.

4.1.1 Pretest Preparation.

4.1.1.1 Cleaning Glassware. All glass components of the train upstream of and including the adsorbent module, shall be cleaned as described in section 3A of the ''Manual of Analytical Methods for the Analysis of Pesticides in Human and Environmental Samples.'' Special care shall be devoted to the removal of residual silicone grease sealants on ground glass connections of used glassware. Any residue shall be removed by soaking the glassware for several hours in a chromic acid cleaning solution prior to cleaning as described above.

4.1.1.2 Adsorbent Trap. The traps must be loaded in a clean area to avoid contamination. They may not be loaded in the field. Fill a trap with 20 to 40 g of XAD–2. Follow the XAD–2 with glass wool and tightly cap both ends of the trap. Add 100 µl of the surrogate standard solution (section 3.3.21) to each trap.

4.1.1.3 Sample Train. It is suggested that all components be maintained according to the procedure described in APTD–0576.

4.1.1.4 Silica Gel. Weigh several 200 to 300 g portions of silica gel in an air tight container to the nearest 0.5 g. Record the total weight of the silica gel plus container, on each container. As an alternative, the silica gel may be weighed directly in its impinger or sampling holder just prior to sampling.

4.1.1.5 Filter. Check each filter against light for irregularities and flaws or pinhole leaks. Pack the filters flat in a clean glass container.

4.1.2 Preliminary Determinations. Same as section 4.1.2 of Method 5.

4.1.3 Preparation of Collection Train.

4.1.3.1 During preparation and assembly of the sampling train, keep all train openings where contamination can enter, sealed until just prior to assembly or until sampling is about to begin.

NOTE: Do not use sealant grease in assembling the train.

4.1.3.2 Place approximately 100 ml of water in the second and third impingers, leave the first and fourth impingers empty, and transfer approximately 200 to 300 g of preweighed silica gel from its container to the fifth impinger.

4.1.3.3 Place the silica gel container in a clean place for later use in the sample recovery. Alternatively, the weight of the silica gel plus impinger may be determined to the nearest 0.5 g and recorded.

4.1.3.4 Assemble the train as shown in Figure 23–1.

4.1.3.5 Turn on the adsorbent module and condenser coil recirculating pump and begin monitoring the adsorbent module gas entry temperature. Ensure proper sorbent temperature gas entry temperature before proceeding and before sampling is initiated. It is extremely important that the XAD–2 adsorbent resin temperature never exceed 50 °C because thermal decomposition will occur. During testing, the XAD–2 temperature must not exceed 20 °C for efficient capture of the PCDD's and PCDF's.

4.1.4 Leak-Check Procedure. Same as Method 5, section 4.1.4.

4.1.5 Sample Train Operation. Same as Method 5, section 4.1.5.

4.2 Sample Recovery. Proper cleanup procedure begins as soon as the probe is removed from the stack at the end of the sampling period. Seal the nozzle end of the sampling probe with Teflon tape or aluminum foil.

When the probe can be safely handled, wipe off all external particulate matter near the tip of the probe. Remove the probe from the train and close off both ends with aluminum foil. Seal off the inlet to the train with Teflon tape, a ground glass cap, or aluminum foil.

Transfer the probe and impinger assembly to the cleanup area. This area shall be clean and enclosed so that the chances of losing or contaminating the sample are minimized. Smoking, which could contaminate the sample, shall not be allowed in the cleanup area.

Inspect the train prior to and during disassembly and note any abnormal conditions, e.g., broken filters, colored impinger liquid, etc. Treat the samples as follows:

4.2.1 Container No. 1. Either seal the filter holder or carefully remove the filter from the filter holder and place it in its identified container. Use a pair of cleaned tweezers to handle the filter. If it is necessary to fold the filter, do so such that the particulate cake is inside the fold. Carefully transfer to the container any particulate matter and filter fibers which adhere to the filter holder gasket, by using a dry inert bristle brush and a sharp-edged blade. Seal the container.

4.2.2 Adsorbent Module. Remove the module from the train, tightly cap both ends, label it, cover with aluminum foil, and store it on ice for transport to the laboratory.

4.2.3 Container No. 2. Quantitatively recover material deposited in the nozzle, probe transfer lines, the front half of the filter holder, and the cyclone, if used, first, by brushing while rinsing three times each with acetone and then, by rinsing the probe three times with methylene chloride. Collect all the rinses in Container No. 2.

Rinse the back half of the filter holder three times with acetone. Rinse the connecting line between the filter and the condenser three times with acetone. Soak the connecting line with three separate portions of methylene chloride for 5 minutes each. If using a separate condenser and adsorbent trap, rinse the condenser in the same manner as the connecting line. Collect all the rinses in Container No. 2 and mark the level of the liquid on the container.

4.2.4 Container No. 3. Repeat the methylene chloride-rinsing described in Section 4.2.3 using toluene as the rinse solvent. Collect the rinses in Container No. 3 and mark the level of the liquid on the container.

4.2.5 Impinger Water. Measure the liquid in the first three impingers to within ±1 ml by using a graduated cylinder or by weighing it to within ±0.5 g by using a balance. Record the volume or weight of liquid present. This information is required to calculate the moisture content of the effluent gas.

Discard the liquid after measuring and recording the volume or weight.

4.2.7 Silica Gel. Note the color of the indicating silica gel to determine if it has been completely spent and make a mention of its condition. Transfer the silica gel from the fifth impinger to its original container and seal.

5. Analysis

All glassware shall be cleaned as described in section 3A of the ''Manual of Analytical Methods for the Analysis of Pesticides in Human and Environmental Samples.'' All samples must be extracted within 30 days of collection and analyzed within 45 days of extraction.

5.1 Sample Extraction.

5.1.1 Extraction System. Place an extraction thimble (section 2.3.4), 1 g of silica gel, and a plug of glass wool into the Soxhlet apparatus, charge the apparatus with toluene, and reflux for a minimum of 3 hours. Remove the toluene and discard it, but retain the silica gel. Remove the extraction thimble from the extraction system and place it in a glass beaker to catch the solvent rinses.

5.1.2 Container No. 1 (Filter). Transfer the contents directly to the glass thimble of the extraction system and extract them simultaneously with the XAD–2 resin.

5.1.3 Adsorbent Cartridge. Suspend the adsorbent module directly over the extraction thimble in the beaker (See section 5.1.1). The glass frit of the module should be in the up position. Using a Teflon squeeze bottle containing toluene, flush the XAD–2 into the thimble onto the bed of cleaned silica gel. Thoroughly rinse the glass module catching the rinsings in the beaker containing the thimble. If the resin is wet, effective extraction can be accomplished by loosely packing the resin in the thimble. Add the XAD–2 glass wool plug into the thimble.

5.1.4 Container No. 2 (Acetone and Methylene Chloride). Concentrate the sample to a volume of about 1–5 ml using the rotary evaporator apparatus, at a temperature of less than 37 °C. Rinse the sample container three times with small portions of methylene chloride and add these to the concentrated solution and concentrate further to near dryness. This residue contains particulate matter removed in the rinse of the train probe and nozzle. Add the concentrate to the filter and the XAD–2 resin in the Soxhlet apparatus described in section 5.1.1.

5.1.5 Extraction. Add 100 µl of the internal standard solution (Section 3.3.20) to the extraction thimble containing the contents of the adsorbent cartridge, the contents of Container No. 1, and the concentrate from section 5.1.4. Cover the contents of the extraction thimble with the cleaned glass wool plug to prevent the XAD–2 resin from floating into the solvent reservoir of the extractor. Place the thimble in the extractor, and add the toluene contained in the beaker to the solvent reservoir. Pour additional toluene to fill the reservoir approximately 2/3 full. Add Teflon boiling chips and assemble the apparatus. Adjust the heat source to cause the extractor to cycle three times per hour. Extract the sample for 16 hours. After extraction, allow the Soxhlet to cool. Transfer the toluene extract and three 10-ml rinses to the rotary evaporator. Concentrate the extract to approximately 10 ml. At this point the analyst may choose to split the sample in half. If so, split the sample, store one half for future use, and analyze the other according to the procedures in sections 5.2 and 5.3. In either case, use a nitrogen evaporative concentrator to reduce the volume of the sample being analyzed to near dryness. Dissolve the residue in 5 ml of hexane.

5.1.6 Container No. 3 (Toluene Rinse). Add 100 µl of the Internal Standard solution (section 3.3.2) to the contents of the container. Concentrate the sample to a volume of about 1–5 ml using the rotary evaporator apparatus at a temperature of less than 37 °C. Rinse the sample container apparatus at a temperature of less than 37 °C. Rinse the sample container three times with small portions of toluene and add these to the concentrated solution and concentrate further to near dryness. Analyze the extract separately according to the procedures in sections 5.2 and 5.3, but concentrate the solution in a rotary evaporator apparatus rather than a nitrogen evaporative concentrator.

5.2 Sample Cleanup and Fractionation.

5.2.1 Silica Gel Column. Pack one end of a glass column, 20 mm×230 mm, with glass wool. Add in sequence, 1 g silica gel, 2 g of sodium hydroxide impregnated silica gel, 1 g silica gel, 4 g of acid-modified silica gel, and 1 g of silica gel. Wash the column with 30 ml

of hexane and discard it. Add the sample extract, dissolved in 5 ml of hexane to the column with two additional 5-ml rinses. Elute the column with an additional 90 ml of hexane and retain the entire eluate. Concentrate this solution to a volume of about 1 ml using the nitrogen evaporative concentrator (section 2.3.7).

5.2.2 Basic Alumina Column. Shorten a 25-ml disposable Pasteur pipette to about 16 ml. Pack the lower section with glass wool and 12 g of basic alumina. Transfer the concentrated extract from the silica gel column to the top of the basic alumina column and elute the column sequentially with 120 ml of 0.5 percent methylene chloride in hexane followed by 120 ml of 35 percent methylene chloride in hexane. Discard the first 120 ml of eluate. Collect the second 120 ml of eluate and concentrate it to about 0.5 ml using the nitrogen evaporative concentrator.

5.2.3 AX–21 Carbon/Celite 545 Column. Remove the botton 0.5 in. from the tip of a 9-ml disposable Pasteur pipette. Insert a glass fiber filter disk in the top of the pipette 2.5 cm from the constriction. Add sufficient carbon/celite mixture to form a 2 cm column. Top with a glass wool plug. In some cases AX–21 carbon fines may wash through the glass wool plug and enter the sample. This may be prevented by adding a celite plug to the exit end of the column. Rinse the column in sequence with 2 ml of 50 percent benzene in ethyl acetate, 1 ml of 50 percent methylene chloride in cyclohexane, and 2 ml of hexane. Discard these rinses. Transfer the concentrate in 1 ml of hexane from the basic alumina column to the carbon/celite column along with 1 ml of hexane rinse. Elute the column sequentially with 2 ml of 50 percent methylene chloride in hexane and 2 ml of 50 percent benzene in ethyl acetate and discard these eluates. Invert the column and elute in the reverse direction with 13 ml of toluene. Collect this eluate. Concentrate the eluate in a rotary evaporator at 50 °C to about 1 ml. Transfer the concentrate to a Reacti-vial using a toluene rinse and concentrate to a volume of 200 µl using a stream of N_2. Store extracts at room temperature, shielded from light, until the analysis is performed.

5.3 Analysis. Analyze the sample with a gas chromatograph coupled to a mass spectrometer (GC/MS) using the instrumental parameters in sections 5.3.1 and 5.3.2. Immediately prior to analysis, add a 20 µl aliquot of the Recovery Standard solution from Table 1 to each sample. A 2 µl aliquot of the extract is injected into the GC. Sample extracts are first analyzed using the DB–5 capillary column to determine the concentration of each isomer of PCDD's and PCDF's (tetra-through octa-). If tetra-chlorinated dibenzofurans are detected in this analysis, then analyze another aliquot of the sample in a separate run, using the DB–225 column to measure the 2,3,7,8 tetra-chloro dibenzofuran isomer. Other column systems may be used, provided that the user is able to demonstrate using calibration and performance checks that the column system is able to meet the specifications of section 6.1.2.2.

5.3.1 Gas Chromatograph Operating Conditions.

5.3.1.1 Injector. Configured for capillary column, splitless, 250 °C.

5.3.1.2 Carrier Gas. Helium, 1–2 ml/min.

5.3.1.3 Oven. Initially at 150 °C. Raise by at least 40 °C/min to 190 °C and then at 3 °C/min up to 300 °C.

5.3.2 High Resolution Mass Spectrometer.

5.3.2.1 Resolution. 10000 m/e.

5.3.2.2 Ionization Mode. Electron impact.

5.3.2.3 Source Temperature 250 °C.

5.3.2.4 Monitoring Mode. Selected ion monitoring. A list of the various ions to be monitored is summarized in Table 3.

5.3.2.5 Identification Criteria. The following identification criteria shall be used for the characterization of polychlorinated dibenzodioxins and dibenzofurans.

1. The integrated ion-abundance ratio (M/M+2 or M+2/M+4) shall be within 15 percent of the theoretical value. The acceptable ion-abundance ratio ranges for the identification of chlorine-containing compounds are given in Table 4.

2. The retention time for the analytes must be within 3 seconds of the corresponding ^{13}C-labeled internal standard, surrogate or alternate standard.

3. The monitored ions, shown in Table 3 for a given analyte, shall reach their maximum within 2 seconds of each other.

4. The identification of specific isomers that do not have corresponding ^{13}C-labeled standards is done by comparison of the relative retention time (RRT) of the analyte to the nearest internal standard retention time with reference (i.e., within 0.005 RRT units) to the comparable RRT's found in the continuing calibration.

5. The signal to noise ratio for all monitored ions must be greater than 2.5.

6. The confirmation of 2, 3, 7, 8–TCDD and 2, 3, 7, 8–TCDF shall satisfy all of the above identification criteria.

7. For the identification of PCDF's, no signal may be found in the corresponding PCDPE channels.

5.3.2.6 Quantification. The peak areas for the two ions monitored for each analyte are summed to yield the total response for each analyte. Each internal standard is used to quantify the indigenous PCDD's or PCDF's in its homologous series. For example, the $^{13}C_{12}$–2,3,7,8-tetra chlorinated dibenzodioxin is used to calculate the concentrations of all other tetra chlorinated isomers. Recoveries of the tetra- and penta- internal standards are calculated using the $^{13}C_{12}$–1,2,3,4–TCDD. Recoveries of the hexa- through octa- internal standards are calculated using $^{13}C_{12}$–

1,2,3,7,8,9–HxCDD. Recoveries of the surrogate standards are calculated using the corresponding homolog from the internal standard.

6. Calibration

Same as Method 5 with the following additions.

6.1 GC/MS System.

6.1.1 Initial Calibration. Calibrate the GC/MS system using the set of five standards shown in Table 2. The relative standard deviation for the mean response factor from each of the unlabeled analytes (Table 2) and of the internal, surrogate, and alternate standards shall be less than or equal to the values in Table 5. The signal to noise ratio for the GC signal present in every selected ion current profile shall be greater than or equal to 2.5. The ion abundance ratios shall be within the control limits in Table 4.

6.1.2 Daily Performance Check.

6.1.2.1 Calibration Check. Inject on µl of solution Number 3 from Table 2. Calculate the relative response factor (RRF) for each compound and compare each RRF to the corresponding mean RRF obtained during the initial calibration. The analyzer performance is acceptable if the measured RRF's for the labeled and unlabeled compounds for the daily run are within the limits of the mean values shown in Table 5. In addition, the ion-abundance ratios shall be within the allowable control limits shown in Table 4.

6.1.2.2 Column Separation Check. Inject a solution of a mixture of PCDD's and PCDF's that documents resolution between 2,3,7,8–TCDD and other TCDD isomers. Resolution is defined as a valley between peaks that is less than 25 percent of the lower of the two peaks. Identify and record the retention time windows for each homologous series.

Perform a similar resolution check on the confirmation column to document the resolution between 2,3,7,8 TCDF and other TCDF isomers.

6.2 Lock Channels. Set mass spectrometer lock channels as specified in Table 3. Monitor the quality control check channels specified in Table 3 to verify instrument stability during the analysis.

7. Quality Control

7.1 Sampling Train Collection Efficiency Check. Add 100 µl of the surrogate standards in Table 1 to the absorbent cartridge of each train before collecting the field samples.

7.2 Internal Standard Percent Recoveries. A group of nine carbon labeled PCDD's and PCDF's representing, the tetra-through octachlorinated homologues, is added to every sample prior to extraction. The role of the internal standards is to quantify the native PCDD's and PCDF's present in the sample as well as to determine the overall method efficiency. Recoveries of the internal standards must be between 40 to 130 percent for the tetra-through hexachlorinated compounds while the range is 25 to 130 percent for the higher hepta- and octachlorinated homologues.

7.3 Surrogate Recoveries. The five surrogate compounds in Table 2 are added to the resin in the adsorbent sampling cartridge before the sample is collected. The surrogate recoveries are measured relative to the internal standards and are a measure of collection efficiency. They are not used to measure native PCDD's and PCDF's. All recoveries shall be between 70 and 130 percent. Poor recoveries for all the surrogates may be an indication of breakthrough in the sampling train. If the recovery of all standards is below 70 percent, the sampling runs must be repeated. As an alternative, the sampling runs do not have to be repeated if the final results are divided by the fraction of surrogate recovery. Poor recoveries of isolated surrogate compounds should not be grounds for rejecting an entire set of the samples.

7.4 Toluene QA Rinse. Report the results of the toluene QA rinse separately from the total sample catch. Do not add it to the total sample.

8. Quality Assurance

8.1 Applicability. When the method is used to analyze samples to demonstrate compliance with a source emission regulation, an audit sample must be analyzed, subject to availability.

8.2 Audit Procedure. Analyze an audit sample with each set of compliance samples. The audit sample contains tetra through octa isomers of PCDD and PCDF. Concurrently, analyze the audit sample and a set of compliance samples in the same manner to evaluate the technique of the analyst and the standards preparation. The same analyst, analytical reagents, and analytical system shall be used both for the compliance samples and the EPA audit sample.

8.3 Audit Sample Availability. Audit samples will be supplied only to enforcement agencies for compliance tests. The availability of audit samples may be obtained by writing: Source Test Audit Coordinator (MD–77B), Quality Assurance Division, Atmospheric Research and Exposure Assessment Laboratory, U.S. Environmental Protection Agency, Research Triangle Park, NC 27711, or by calling the Source Test Audit Coordinator (STAC) at (919) 541–7834. The request for the audit sample must be made at least 30 days prior to the scheduled compliance sample analysis.

8.4 Audit Results. Calculate the audit sample concentration according to the calculation procedure described in the audit instructions included with the audit sample. Fill in the audit sample concentration and the analyst's name on the audit response form included with the audit instructions.

Send one copy to the EPA Regional Office or the appropriate enforcement agency and a second copy to the STAC. The EPA Regional office or the appropriate enforcement agency will report the results of the audit to the laboratory being audited. Include this response with the results of the compliance samples in relevant reports to the EPA Regional Office or the appropriate enforcement agency.

9. Calculations

Same as Method 5, section 6 with the following additions.

9.1 Nomenclature.

A_{ai}=Integrated ion current of the noise at the retention time of the analyte.

A^*_{ci}=Integrated ion current of the two ions characteristic of the internal standard i in the calibration standard.

A_{cij}=Integrated ion current of the two ions characteristic of compound i in the jth calibration standard.

A^*_{cij}=Integrated ion current of the two ions characteristic of the internal standard i in the jth calibration standard.

A_{csi}=Integrated ion current of the two ions characteristic of surrogate compound i in the calibration standard.

A_i=Integrated ion current of the two ions characteristic of compound i in the sample.

A^*_i=Integrated ion current of the two ions characteristic of internal standard i in the sample.

A_{rs}=Integrated ion current of the two ions characteristic of the recovery standard.

A_{si}=Integrated ion current of the two ions characteristic of surrogate compound i in the sample.

C_i=Concentration of PCDD or PCDF i in the sample, pg/M^3.

C_T=Total concentration of PCDD's or PCDF's in the sample, pg/M^3.

m_{ci}=Mass of compound i in the calibration standard injected into the analyzer, pg.

m_{rs}=Mass of recovery standard in the calibration standard injected into the analyzer, pg.

m_{si}=Mass of surrogate compound in the calibration standard, pg.

RRF_i=Relative response factor.

RRF_{rs}=Recovery standard response factor.

RRF_s=Surrogate compound response factor.

9.2 Average Relative Response Factor.

$$RRF_i = \frac{1}{n}\sum_{j=1}^{n}\frac{A_{cij}\, m^*_{ci}}{A^*_{cij}\, m_{ci}} \qquad \text{Eq. 23-1}$$

9.3 Concentration of the PCDD's and PCDF's.

$$C_i = \frac{m_i^* A_i}{A_i^* RRF_i V_{mstd}} \qquad \text{Eq. 23-2}$$

9.4 Recovery Standard Response Factor.

$$RRF_{rs} = \frac{A_{ci}^* m_{rs}}{A_{rs} m_{ci}^*} \qquad \text{Eq. 23-3}$$

9.5 Recovery of Internal Standards (R*).

$$R^* = \frac{A_i^* m_{rs}}{A_{rs} RF_{rs} m_i^*} \times 100\% \qquad \text{Eq. 23-4}$$

9.6 Surrogate Compound Response Factor.

$$RRF_s = \frac{A_{ci}^* m_s}{A_{cis} m_{ci}^*} \qquad \text{Eq. 23-5}$$

9.7 Recovery of Surrogate Compounds (R_s).

$$R_s = \frac{A_s m_i^*}{A_i^* RRF_s m_s} \times 100\% \qquad \text{Eq. 23-6}$$

9.8 Minimum Detectable Limit (MDL).

$$MDL = \frac{2.5\, A_{ai} m_i^*}{A_{ci}^* RRF_i} \qquad \text{Eq. 23-7}$$

9.9 Total Concentration of PCDD's and PCDF's in the Sample.

$$C_{Tr} = \sum_{i=1}^{n} C_i \qquad \text{Eq. 23-8}$$

Any PCDD's or PCDF's that are reported as nondetected (below the MDL) shall be counted as zero for the purpose of calculating the total concentration of PCDD's and PCDF's in the sample.

10. Bibliography

1. American Society of Mechanical Engineers. Sampling for the Determination of Chlorinated Organic Compounds in Stack Emissions. Prepared for U.S. Department of Energy and U.S. Environmental Protection Agency. Washington DC. December 1984. 25 p.

2. American Society of Mechanical Engineers. Analytical Procedures to Assay Stack Effluent Samples and Residual Combustion Products for Polychlorinated Dibenzo-p-Dioxins (PCDD) and Polychlorinated Dibenzofurans (PCDF). Prepared for the U.S. Department of Energy and U.S. Environmental Protection Agency. Washington, DC. December 1984. 23 p.

3. Thompson, J. R. (ed.). Analysis of Pesticide Residues in Human and Environmental Samples. U.S. Environmental Protection Agency. Research Triangle Park, NC. 1974.

4. Triangle Laboratories. Case Study: Analysis of Samples for the Presence of Tetra Through Octachloro-p-Dibenzodioxins and Dibenzofurans. Research Triangle Park, NC. 1988. 26 p.

5. U.S. Environmental Protection Agency. Method 8290—The Analysis of Polychlorinated Dibenzo-p-dioxin and Polychlorinated Dibenzofurans by High-Resolution Gas Chromotography/High-Resolution Mass Spectrometry. In: Test Methods for Evaluating Solid Waste. Washington, DC. SW–846.

TABLE 1—COMPOSITION OF THE SAMPLE FORTIFICATION AND RECOVERY STANDARDS SOLUTIONS

Analyte	Concentration (pg/µl)
Internal Standards:	
$^{13}C_{12}$-2,3,7,8-TCDD	100
$^{13}C_{12}$-1,2,3,7,8-PeCDD	100
$^{13}C_{12}$-1,2,3,6,7,8-HxCDD	100
$^{13}C_{12}$-1,2,3,4,6,7,8-HpCDD	100
$^{13}C_{12}$-OCDD	100
$^{13}C_{12}$-2,3,7,8-TCDF	100
$^{13}C_{12}$-1,2,3,7,8-PeCDF	100
$^{13}C_{12}$-1,2,3,6,7,8-HxCDF	100
$^{13}C_{12}$-1,2,3,4,6,7,8-HpCDF	100
Surrogate Standards:	
$^{37}Cl_4$-2,3,7,8-TCDD	100
$^{13}C_{12}$-1,2,3,4,7,8-HxCDD	100
$^{13}C_{12}$-2,3,4,7,8-PeCDF	100

TABLE 1—COMPOSITION OF THE SAMPLE FORTIFICATION AND RECOVERY STANDARDS SOLUTIONS—Continued

Analyte	Concentration (pg/µl)
$^{13}C_{12}$-1,2,3,4,7,8-HxCDF	100
$^{13}C_{12}$-1,2,3,4,7,8,9-HpCDF	100
Recovery Standards:	
$^{13}C_{12}$-1,2,3,4-TCDD	500
$^{13}C_{12}$-1,2,3,7,8,9-HxCDD	500

TABLE 2—COMPOSITION OF THE INITIAL CALIBRATION SOLUTIONS

Compound	Concentrations (pg/µL)				
	Solution No.				
	1	2	3	4	5
Alternate Standard:					
$^{13}C_{12}$-1,2,3,7,8,9-HxCDF	2.5	5	25	250	500
Recovery Standards:					
$^{13}C_{12}$-1,2,3,4-TCDD	100	100	100	100	100
$^{13}C_{12}$-1,2,3,7,8,9-HxCDD	100	100	100	100	100

TABLE 3—ELEMENTAL COMPOSITIONS AND EXACT MASSES OF THE IONS MONITORED BY HIGH RESOLUTION MASS SPECTROMETRY FOR PCDD'S AND PCDF'S

Descriptor No.	Accurate mass	Ion type	Elemental composition	Analyte
2	292.9825	LOCK	C_7F_{11}	PFK
	303.9016	M	$C_{12}H_4{}^{35}Cl_4O$	TCDF
	305.8987	M+2	$C_{12}H_4{}^{35}Cl^{37}O$	TCDF
	315.9419	M	$^{13}C_{12}H_4{}^{35}Cl_4O$	TCDF (S)
	317.9389	M+2	$^{13}C_{12}H_4{}^{35}Cl_3{}^{37}ClO$	TCDF (S)
	319.8965	M	$C_{12}H_4{}^{35}ClO_2$	TCDD
	321.8936	M+2	$C_{12}H_4{}^{35}Cl_3{}^{37}ClO_2$	TCDD
	327.8847	M	$C_{12}H_4{}^{37}Cl_4O_2$	TCDD (S)
	330.9792	QC	C_7F_{13}	PFK
	331.9368	M	$^{13}C_{12}H_4{}^{35}Cl_4O_2$	TCDD (S)
	333.9339	M+2	$^{13}C_{12}H_4{}^{35}Cl^{37}ClO_2$	TCDD (S)
	339.8597	M+2	$C_{12}H_3{}^{35}Cl_4{}^{37}ClO$	PECDF
	341.8567	M+4	$C_{12}H_3{}^{35}Cl_3{}^{37}Cl_2O$	PeCDF
	351.9000	M+2	$^{13}C_{12}H_3{}^{35}Cl_4{}^{37}ClO$	PeCDF (S)
	353.8970	M+4	$^{13}C_{12}H_3{}^{35}Cl^{3537}Cl_2O$	PeCDF (S)
	355.8546	M+2	$C_{12}H_3{}^{35}Cl_3 37ClO_2$	PeCDD
	357.8516	M+4	$C_{12}H_3{}^{35}Cl_3{}^{37}Cl_2O_2$	PeCDD
	367.8949	M+2	$^{13}C_{12}H_3{}^{35}Cl_4{}^{37}ClO_2$	PeCDD (S)
	369.8919	M+4	$^{13}C_{12}H_3{}^{35}Cl_3{}^{37}\ Cl_2O_2$	PeCDD (S)
	375.8364	M+2	$C_{12}H_4{}^{35}Cl_5{}^{37}ClO$	HxCDPE
	409.7974	M+2	$C_{12}H_3{}^{35}Cl_6{}^{37}ClO$	HpCPDE
3	373.8208	M+2	$C_{12}H_2 35Cl_5{}^{37}ClO$	HxCDF
	375.8178	M+4	$C_{12}H_2{}^{35}Cl_4{}^{37}Cl_2O$	HxCDF
	383.8639	M	$^{13}C_{12}H_2{}^{35}Cl_6O$	HxCDF (S)
	385.8610	M+2	$^{13}C_{12}H_2{}^{35}Cl_5{}^{37}ClO$	HxCDF (S)
	389.8157	M+2	$C_{12}H_2{}^{35}Cl_5{}^{37}ClO_2$	HxCDD
	391.8127	M+4	$C_{12}H_2{}^{35}Cl_4{}^{37}Cl_2O_2$	HxCDD
	392.9760	LOCK	C_9F_{15}	PFK
	401.8559	M+2	$^{13}C_{12}H_2{}^{35}Cl_5{}^{37}ClO_2$	HxCDD (S)
	403.8529	M+4	$^{13}C_{12}H_2{}^{35}Cl_4{}^{37}Cl_2O$	HxCDD (S)
	445.7555	M+4	$C_{12}H_2{}^{35}Cl_6{}^{37}Cl_2O$	OCDPE
	430.9729	QC	C_9F_{17}	PFK
4	407.7818	M+2	$C_{12}H^{35}Cl_6{}^{37}ClO$	HpCDF
	409.7789	M+4	$C_{12}H^{35}Cl_5{}^{37}Cl_2O$	HpCDF
	417.8253	M	$^{13}C_{12}H^{35}Cl_7O$	HpCDF (S)
	419.8220	M+2	$^{13}C_{12}H^{35}Cl_6{}^{37}ClO$	HpCDF (S)
	423.7766	M+2	$C_{12}H^{35}Cl_6{}^{37}ClO_2$	HpCDD
	425.7737	M+4	$C_{12}H^{35}Cl_5{}^{37}Cl_2O_2$	HpCDD

TABLE 3—ELEMENTAL COMPOSITIONS AND EXACT MASSES OF THE IONS MONITORED BY HIGH RESOLUTION MASS SPECTROMETRY FOR PCDD'S AND PCDF'S—Continued

Descriptor No.	Accurate mass	Ion type	Elemental composition	Analyte
	435.8169	M+2	$^{13}C_{12}H^{35}Cl_6{}^{37}ClO_2$	HpCDD (S)
	437.8140	M+4	$^{13}C_{12}H^{35}Cl_5{}^{37}Cl_2O_2$	HpCDD (S)
	479.7165	M+4	$C_{12}H^{35}Cl_7{}^{37}Cl_2O$	NCPDE
	430.9729	LOCK	C_9F_{17}	PFK
	441.7428	M+2	$C_{12}{}^{35}Cl_7{}^{37}ClO$	OCDF
	443.7399	M+4	$C_{12}{}^{35}Cl_6{}^{37}Cl_2O$	OCDF
	457.7377	M+2	$C_{12}{}^{35}Cl_7{}^{37}ClO_2$	OCDD
	459.7348	M+4	$C_{12}{}^{35}Cl_6{}^{37}Cl_2O_2$	OCDD
	469.7779	M+2	$^{13}C_{12}{}^{35}Cl_7{}^{37}ClO_2$	OCDD (S)
	471.7750	M+4	$^{13}C_{12}{}^{35}Cl_6{}^{37}Cl_2O_2$	OCDD (S)
	513.6775	M+4	$C_{12}{}^{35}Cl_8{}^{37}Cl_2O_2$	DCDPE
	442.9728	QC	$C_{10}F_{17}$	PFK

(a) The following nuclidic masses were used:
H=1.007825
C=12.000000
^{13}C=13.003355
F=18.9984
O=15.994915
^{35}Cl=34.968853
^{37}Cl=36.965903
S=Labeled Standard
QC=Ion selected for monitoring instrument stability during the GC/MS analysis.

TABLE 4—ACCEPTABLE RANGES FOR ION-ABUNDANCE RATIOS OF PCDD'S AND PCDF'S

No. of chlorine atoms	Ion type	Theoretical ratio	Control limits	
			Lower	Upper
4	M/M+2	0.77	0.65	0.89
5	M+2/M+4	1.55	1.32	1.78
6	M+2/M+4	1.24	1.05	1.43
6[a]	M/M+2	0.51	0.43	0.59
7[b]	M/M+2	0.44	0.37	0.51
7	M+2/M+4	1.04	0.88	1.20
8	M+2/M+4	0.89	0.76	1.02

[a] Used only for ^{13}C-HxCDF.
[b] Used only for ^{13}C-HpCDF.

TABLE 5—MINIMUM REQUIREMENTS FOR INITIAL AND DAILY CALIBRATION RESPONSE FACTORS

Compound	Relative response factors	
	Initial calibration RSD	Daily calibration % difference
Unlabeled Analytes:		
2,3,7,8-TCDD	25	25
2,3,7,8-TCDF	25	25
1,2,3,7,8-PeCDD	25	25
1,2,3,7,8-PeCDF	25	25
2,3,4,7,8-PeCDF	25	25
1,2,4,5,7,8-HxCDD	25	25
1,2,3,6,7,8-HxCDD	25	25
1,2,3,7,8,9-HxCDD	25	25
1,2,3,4,7,8-HxCDF	25	25
1,2,3,6,7,8-HxCDF	25	25
1,2,3,7,8,9-HxCDF	25	25
2,3,4,6,7,8-HxCDF	25	25
1,2,3,4,6,7,8-HpCDD	25	25
1,2,3,4,6,7,8-HpCDF	25	25
OCDD	25	25
OCDF	30	30
Internal Standards:		
$^{13}C_{12}$-2,3,7,8-TCDD	25	25

TABLE 5—MINIMUM REQUIREMENTS FOR INITIAL AND DAILY CALIBRATION RESPONSE FACTORS—Continued

Compound	Relative response factors	
	Initial calibration RSD	Daily calibration % difference
$^{13}C_{12}$-1,2,3,7,8-PeCDD	30	30
$^{13}C_{12}$-1,2,3,6,7,8-HxCDD	25	25
$^{13}C_{12}$-1,2,3,4,6,7,8-HpCDD	30	30
$^{13}C_{12}$-OCDD	30	30
$^{13}C_{12}$-2,3,7,8-TCDF	30	30
$^{13}C_{12}$-1,2,3,7,8-PeCDF	30	30
$^{13}C_{12}$-1,2,3,6,7,8-HxCDF	30	30
$^{13}C_{12}$-1,2,3,4,6,7,8-HpCDF	30	30
Surrogate Standards:		
$^{37}Cl_4$-2,3,7,8-TCDD	25	25
$^{13}C_{12}$-2,3,4,7,8-PeCDF	25	25
$^{13}C_{12}$-1,2,3,4,7,8-HxCDD	25	25
$^{13}C_{12}$-1,2,3,4,7,8-HxCDF	25	25
$^{13}C_{12}$-1,2,3,4,7,8,9-HpCDF	25	25
Alternate Standard:		
$^{13}C_{12}$-1,2,3,7,8,9-HxCDF	25	25

METHOD 24—DETERMINATION OF VOLATILE MATTER CONTENT, WATER CONTENT, DENSITY, VOLUME SOLIDS, AND WEIGHT SOLIDS OF SURFACE COATINGS

1.0 Scope and Application

1.1 Analytes.

Analyte	CAS No.
Volatile organic compounds	No CAS Number assigned
Water.	7732–18–5

1.2 Applicability. This method is applicable for the determination of volatile matter content, water content, density, volume solids, and weight solids of paint, varnish, lacquer, or other related surface coatings.

1.3 Precision and Bias. Intra-and interlaboratory analytical precision statements are presented in Section 13.1. No bias has been identified.

2.0 Summary of Method

2.1 Standard methods are used to determine the volatile matter content, water content, density, volume solids, and weight solids of paint, varnish, lacquer, or other related surface coatings.

3.0 Definitions

3.1 *Waterborne coating* means any coating which contains more than 5 percent water by weight in its volatile fraction.

3.2 *Multicomponent coatings* are coatings that are packaged in two or more parts, which are combined before application. Upon combination a coreactant from one part of the coating chemically reacts, at ambient conditions, with a coreactant from another part of the coating.

3.3 *Ultraviolet (UV) radiation-cured coatings* are coatings which contain unreacted monomers that are polymerized by exposure to ultraviolet light.

4.0 Interferences [Reserved]

5.0 Safety

5.1 Disclaimer. This method may involve hazardous materials, operations, and equipment. This test method may not address all of the safety problems associated with its use. It is the responsibility of the user of this test method to establish appropriate safety and health practices and to determine the applicability of regulatory limitations prior to performing this test method.

5.2 Hazardous Components. Several of the compounds that may be contained in the coatings analyzed by this method may be irritating or corrosive to tissues (e.g., heptane) or may be toxic (e.g., benzene, methyl alcohol). Nearly all are fire hazards. Appropriate precautions can be found in reference documents, such as Reference 3 of Section 16.0.

6.0 Equipment and Supplies

The equipment and supplies specified in the ASTM methods listed in Sections 6.1 through 6.6 (incorporated by reference—see § 60.17 for acceptable versions of the methods) are required:

6.1 ASTM D 1475–60, 80, or 90, Standard Test Method for Density of Paint, Varnish, Lacquer, and Related Products.

6.2 ASTM D 2369–81, 87, 90, 92, 93, or 95, Standard Test Method for Volatile Content of Coatings.

6.3 ASTM D 3792–79 or 91, Standard Test Method for Water Content of Water Reducible Paints by Direct Injection into a Gas Chromatograph.

6.4 ASTM D 4017–81, 90, or 96a, Standard Test Method for Water in Paints and Paint Materials by the Karl Fischer Titration Method.

6.5 ASTM 4457–85 91, Standard Test Method for Determination of Dichloromethane and 1,1,1-Trichloroethane in Paints and Coatings by Direct Injection into a Gas Chromatograph.

6.6 ASTM D 5403–93, Standard Test Methods for Volatile Content of Radiation Curable Materials.

6.7 ASTM D 6419–00, Test Method for Volatile Content of Sheet-Fed and Coldset Web Offset Printing Inks.

7.0 Reagents and Standards

7.1 The reagents and standards specified in the ASTM methods listed in Sections 6.1 through 6.6 are required.

8.0 Sample Collection, Preservation, Storage, and Transport

8.1 Follow the sample collection, preservation, storage, and transport procedures described in Reference 1 of Section 16.0.

9.0 Quality Control

9.1 Reproducibility

NOTE: Not applicable to UV radiation-cured coatings). The variety of coatings that may be subject to analysis makes it necessary to verify the ability of the analyst and the analytical procedures to obtain reproducible results for the coatings tested. Verification is accomplished by running duplicate analyses on each sample tested (Sections 11.2 through 11.4) and comparing the results with the intra-laboratory precision statements (Section 13.1) for each parameter.

9.2 Confidence Limits for Waterborne Coatings. Because of the inherent increased imprecision in the determination of the VOC content of waterborne coatings as the weight percent of water increases, measured parameters for waterborne coatings are replaced with appropriate confidence limits (Section 12.6). These confidence limits are based on measured parameters and inter-laboratory precision statements.

10.0 Calibration and Standardization

10.1 Perform the calibration and standardization procedures specified in the ASTM methods listed in Sections 6.1 through 6.6.

11.0 Analytical Procedure

Additional guidance can be found in Reference 2 of Section 16.0.

11.1 Non Thin-film Ultraviolet Radiation-cured (UV radiation-cured) Coatings.

11.1.1 Volatile Content. Use the procedure in ASTM D 5403 to determine the volatile matter content of the coating except the curing test described in NOTE 2 of ASTM D 5403 is required.

11.1.2 Water Content. To determine water content, follow Section 11.3.2.

11.1.3 Coating Density. To determine coating density, follow Section 11.3.3.

11.1.4 Solids Content. To determine solids content, follow Section 11.3.4.

11.1.5 To determine if a coating or ink can be classified as a thin-film UV cured coating or ink, use the equation in Section 12.2. If C is less than 0.2 g and A is greater than or equal to 225 cm^2 (35 in^2) then the coating or ink is considered a thin-film UV radiation-cured coating and ASTM D 5403 is not applicable.

NOTE: As noted in Section 1.4 of ASTM D 5403, this method may not be applicable to radiation curable materials wherein the volatile material is water.

11.2 Multi-component Coatings.

11.2.1 Sample Preparation.

11.2.1.1 Prepare about 100 ml of sample by mixing the components in a storage container, such as a glass jar with a screw top or a metal can with a cap. The storage container should be just large enough to hold the mixture. Combine the components (by weight or volume) in the ratio recommended by the manufacturer. Tightly close the container between additions and during mixing to prevent loss of volatile materials. However, most manufacturers mixing instructions are by volume. Because of possible error caused by expansion of the liquid when measuring the volume, it is recommended that the components be combined by weight. When weight is used to combine the components and the manufacturer's recommended ratio is by volume, the density must be determined by Section 11.3.3.

11.2.1.2 Immediately after mixing, take aliquots from this 100 ml sample for determination of the total volatile content, water content, and density.

11.2.2 Volatile Content. To determine total volatile content, use the apparatus and reagents described in ASTM D2369 Sections 3 and 4 (incorporated by reference—see § 60.17 for the approved versions of the standard), respectively, and use the following procedures:

11.2.2.1 Weigh and record the weight of an aluminum foil weighing dish. Add 3 ±1 ml of suitable solvent as specified in ASTM D2369 to the weighing dish. Using a syringe as specified in ASTM D2369, weigh to 1 mg, by difference, a sample of coating into the weighing dish. For coatings believed to have a volatile content less than 40 weight percent, a suitable size is 0.3 + 0.10 g, but for coatings believed to have a volatile content greater than 40 weight percent, a suitable size is 0.5 ±0.1 g.

NOTE: If the volatile content determined pursuant to Section 12.4 is not in the range corresponding to the sample size chosen repeat the test with the appropriate sample size. Add the specimen dropwise, shaking (swirling) the dish to disperse the specimen completely in the solvent. If the material forms a lump that cannot be dispersed, discard the specimen and prepare a new one. Similarly, prepare a duplicate. The sample shall stand for a minimum of 1 hour, but no more than 24 hours prior to being oven cured at 110 ±5 °C (230 ±9 °F) for 1 hour.

11.2.2.2 Heat the aluminum foil dishes containing the dispersed specimens in the forced draft oven for 60 min at 110 ±5 °C (230 ±9 °F). Caution—provide adequate ventilation, consistent with accepted laboratory practice, to prevent solvent vapors from accumulating to a dangerous level.

11.2.2.3 Remove the dishes from the oven, place immediately in a desiccator, cool to ambient temperature, and weigh to within 1 mg.

11.2.2.4 Run analyses in pairs (duplicate sets) for each coating mixture until the criterion in Section 11.4 is met. Calculate W_V following Equation 24–2 and record the arithmetic average.

11.2.3 Water Content. To determine water content, follow Section 11.3.2.

11.2.4 Coating Density. To determine coating density, follow Section 11.3.3.

11.2.5 Solids Content. To determine solids content, follow Section 11.3.4.

11.2.6 Exempt Solvent Content. To determine the exempt solvent content, follow Section 11.3.5.

NOTE: For all other coatings (*i.e.*, water-or solvent-borne coatings) not covered by multicomponent or UV radiation-cured coatings, analyze as shown below:

11.3 Water-or Solvent-borne coatings.

11.3.1 Volatile Content. Use the procedure in ASTM D 2369 to determine the volatile matter content (may include water) of the coating.

11.3.1.1 Record the following information:

W_1=weight of dish and sample before heating, g

W_2=weight of dish and sample after heating, g

W_3=sample weight, g.

11.3.1.2 Calculate the weight fraction of the volatile matter (W_v) for each analysis as shown in Section 12.3.

11.3.1.3 Run duplicate analyses until the difference between the two values in a set is

less than or equal to the intra-laboratory precision statement in Section 13.1.

11.3.1.4 Record the arithmetic average (W_v).

11.3.2 Water Content. For waterborne coatings only, determine the weight fraction of water (W_w) using either ASTM D 3792 or ASTM D 4017.

11.3.2.1 Run duplicate analyses until the difference between the two values in a set is less than or equal to the intra-laboratory precision statement in Section 13.1.

11.3.2.2 Record the arithmetic average (w_w).

11.3.3 Coating Density. Determine the density (Dc, kg/l) of the surface coating using the procedure in ASTM D 1475.

11.3.3.1 Run duplicate analyses until each value in a set deviates from the mean of the set by no more than the intra-laboratory precision statement in Section 13.1.

11.3.3.2 Record the arithmetic average (D_c).

11.3.4 Solids Content. Determine the volume fraction (V_s) solids of the coating by calculation using the manufacturer's formulation.

11.3.5 Exempt Solvent Content. Determine the weight fraction of exempt solvents (W_E) by using ASTM Method D4457. Run a duplicate set of determinations and record the arithmetic average (W_E).

11.4 Sample Analysis Criteria. For W_v and W_w, run duplicate analyses until the difference between the two values in a set is less than or equal to the intra-laboratory precision statement for that parameter. For D_c, run duplicate analyses until each value in a set deviates from the mean of the set by no more than the intra-laboratory precision statement. If, after several attempts, it is concluded that the ASTM procedures cannot be used for the specific coating with the established intra-laboratory precision (excluding UV radiation-cured coatings), the U.S. Environmental Protection Agency (EPA) will assume responsibility for providing the necessary procedures for revising the method or precision statements upon written request to: Director, Emissions, Monitoring, and Analysis Division, MD–14, Office of Air Quality Planning and Standards, U.S. Environmental Protection Agency, Research Triangle Park, NC 27711.

12.0 Calculations and Data Analysis

12.1 Nomenclature.

A=Area of substrate, cm^2, (in^2).

C=Amount of coating or ink added to the substrate, g.

D_c=Density of coating or ink, g/cm^3 (g/in^3).

F=Manufacturer's recommended film thickness, cm (in).

W_o=Weight fraction of nonaqueous volatile matter, g/g.

W_s=Weight fraction of solids, g/g.

W_v=Weight fraction of the volatile matter, g/g.

W_w=Weight fraction of the water, g/g.

12.2 To determine if a coating or ink can be classified as a thin-film UV cured coating or ink, use the following equation:

$$C = F\,A\,D_c \qquad \text{Eq. 24-1}$$

12.3 Calculate W_v for each analysis as shown below:

$$W_v = \frac{W_1 - W_2}{W_3} \qquad \text{Eq. 24-2}$$

12.4 Nonaqueous Volatile Matter.

12.4.1 Solvent-borne Coatings.

$$W_o = W_v \qquad \text{Eq. 24-3}$$

12.4.2 Waterborne Coatings.

$$W_o = W_v - W_w \qquad \text{Eq. 24-4}$$

12.4.3 Coatings Containing Exempt Solvents.

$$W_o = W_v - W_E - W_w \qquad \text{Eq. 24-5}$$

12.5 Weight Fraction Solids.

$$W_s = 1 - W_v \qquad \text{Eq. 24-6}$$

12.6 Confidence Limit Calculations for Waterborne Coatings. To calculate the lower confidence limit, subtract the appropriate inter-laboratory precision value from the measured mean value for that parameter. To calculate the upper confidence limit, add the appropriate inter-laboratory precision value to the measured mean value for that parameter. For W_v and D_c, use the lower confidence limits; for W_w, use the upper confidence limit. Because W_s is calculated, there is no adjustment for this parameter.

13.0 Method Performance

13.1 Analytical Precision Statements. The intra-and inter-laboratory precision statements are given in Table 24–1 in Section 17.0.

14.0 Pollution Prevention [Reserved]

15.0 Waste Management [Reserved]

16.0 References

Same as specified in Section 6.0, with the addition of the following:

1. Standard Procedure for Collection of Coating and Ink Samples for Analysis by Reference Methods 24 and 24A. EPA–340/1–91–010. U.S. Environmental Protection Agency, Stationary Source Compliance Division, Washington, D.C. September 1991.

2. Standard Operating Procedure for Analysis of Coating and Ink Samples by Reference Methods 24 and 24A.

EPA–340/1–91–011. U.S. Environmental Protection Agency, Stationary Source Compliance Division, Washington, D.C. September 1991.

3. Handbook of Hazardous Materials: Fire, Safety, Health. Alliance of American Insurers. Schaumberg, IL. 1983.

17.0 Tables, Diagrams, Flowcharts, and Validation Data

TABLE 24–1—ANALYTICAL PRECISION STATEMENTS

	Intra-laboratory	Inter-laboratory
Volatile matter content, W_v	$\pm 0.015\ \overline{W}_v$	$\pm 0.047\ \overline{W}_v$
Water content, W_w	$\pm 0.029\ \overline{W}_w$	$\pm 0.075\ \overline{W}_w$
Density, D_c	±0.001 kg/l	±0.002 kg/l

METHOD 24A—DETERMINATION OF VOLATILE MATTER CONTENT AND DENSITY OF PUBLICATION ROTOGRAVURE INKS AND RELATED PUBLICATION ROTOGRAVURE COATINGS

1.0 Scope and Application

1.1 Analytes.

Analyte	CAS No.
Volatile organic compounds (VOC).	No CAS number assigned.

1.2 Applicability. This method is applicable for the determination of the VOC content and density of solvent-borne (solvent-reducible) publication rotogravure inks and related publication rotogravure coatings.

2.0 Summary of Method

2.1 Separate procedures are used to determine the VOC weight fraction and density of the ink or related coating and the density of the solvent in the ink or related coating. The VOC weight fraction is determined by measuring the weight loss of a known sample quantity which has been heated for a specified length of time at a specified temperature. The density of both the ink or related coating and solvent are measured by a standard procedure. From this information, the VOC volume fraction is calculated.

3.0 Definitions [Reserved]

4.0 Interferences [Reserved]

5.0 Safety

5.1 Disclaimer. This method may involve hazardous materials, operations, and equipment. This test method does not purport to address all of the safety problems associated with its use. It is the responsibility of the user of this test method to establish appropriate safety and health practices and to determine the applicability of regulatory limitations prior to performing this test method.

5.2 Hazardous Components. Some of the compounds that may be contained in the inks or related coatings analyzed by this method may be irritating or corrosive to tissues or may be toxic. Nearly all are fire hazards. Appropriate precautions can be found in reference documents, such as Reference 6 of Section 16.0.

6.0 Equipment and Supplies

The following equipment and supplies are required for sample analysis:

6.1 Weighing Dishes. Aluminum foil, 58 mm (2.3 in.) in diameter by 18 mm (0.7 in.) high, with a flat bottom. There must be at least three weighing dishes per sample.

6.2 Disposable Syringe. 5 ml.

6.3 Analytical Balance. To measure to within 0.1 mg.

6.4 Oven. Vacuum oven capable of maintaining a temperature of 120 ±2 °C (248 ±4 °F) and an absolute pressure of 510 ±51 mm Hg (20 ±2 in. Hg) for 4 hours. Alternatively, a forced draft oven capable of maintaining a temperature of 120 ±2 °C (248 ±4 °F) for 24 hours.

6.5 The equipment and supplies specified in ASTM D 1475–60, 80, or 90 (incorporated by reference—see §60.17).

7.0 Reagents and Standards

7.1 The reagents and standards specified in ASTM D 1475–60, 80, or 90 are required.

8.0 Sample Collection, Preservation, Storage, and Transport

8.1 Follow the sample collection, preservation, storage, and transport procedures described in Reference 4 of Section 16.0.

9.0 Quality Control [Reserved]

10.0 Calibration and Standardization [Reserved]

11.0 Analytical Procedure

Additional guidance can be found in Reference 5 of Section 16.0.

11.1 VOC Weight Fraction. Shake or mix the ink or related coating sample thoroughly to assure that all the solids are completely suspended. Label and weigh to the nearest 0.1 mg a weighing dish and record this weight (M_{x1}). Using a 5 ml syringe, without a needle, extract an aliquot from the ink or related coating sample. Weigh the syringe and aliquot to the nearest 0.1 mg and record this

weight (M_{cy1}). Transfer 1 to 3 g of the aliquot to the tared weighing dish. Reweigh the syringe and remaining aliquot to the nearest 0.1 mg and record this weight (M_{cy2}). Heat the weighing dish with the transferred aliquot in a vacuum oven at an absolute pressure of 510 ±51 mm Hg (20 ±2 in. Hg) and a temperature of 120 ±2 °C (248 ±4 °F) for 4 hours. Alternatively, heat the weighing dish with the transferred aliquot in a forced draft oven at a temperature of 120 ±2 °C for 24 hours. After the weighing dish has cooled, reweigh it to the nearest 0.1 mg and record the weight (M_{x2}). Repeat this procedure two times for each ink or related coating sample, for a total of three samples.

11.2 Ink or Related Coating Density. Determine the density of the ink or related coating (D_c) according to the procedure outlined in ASTM D 1475. Make a total of three determinations for each ink or related coating sample. Report the ink or related coating density as the arithmetic average (D_c) of the three determinations.

11.3 Solvent Density. Determine the density of the solvent (D_o) according to the procedure outlined in ASTM D 1475. Make a total of three determinations for each ink or related coating sample. Report the solvent density as the arithmetic average (D_o) of the three determinations.

12.0 Calculations and Data Analysis

12.1 VOC Weight Fraction. For each determination, calculate the volatile organic content weight fraction (W_o) using the following equation:

$$W_o = \frac{M_{x1} + M_{cy1} - M_{cy2} - M_{x2}}{M_{cy1} - M_{cy2}} \qquad \text{Eq. 24A-1}$$

Make a total of three determinations. Report the VOC weight fraction as the arithmetic average ($\overline{W}_o$) of the three determinations.

12.2 VOC Volume Fraction. Calculate the volume fraction volatile organic content (V_o) using the following equation:

$$V_o = \frac{\overline{W}_o \overline{D}_c}{\overline{D}_o} \qquad \text{Eq. 24A-2}$$

13.0 Method Performance [Reserved]

14.0 Pollution Prevention [Reserved]

15.0 Waste Management [Reserved]

16.0 References

1. Standard Test Method for Density of Paint, Varnish, Lacquer, and Related Products. ASTM Designation D 1475.

2. Teleconversation. Wright, Chuck, Inmont Corporation with Reich, R., A., Radian Corporation. September 25, 1979, Gravure Ink Analysis.

3. Teleconversation. Oppenheimer, Robert, Gravure Research Institute with Burt, Rick, Radian Corporation, November 5, 1979, Gravure Ink Analysis.

4. Standard Procedure for Collection of Coating and Ink Samples for Analysis by Reference Methods 24 and 24A. EPA–340/1–91–010. U.S. Environmental Protection Agency, Stationary Source Compliance Division, Washington, D.C. September 1991.

5. Standard Operating Procedure for Analysis of Coating and Ink Samples by Reference Methods 24 and 24A. EPA–340/1–91–011. U.S. Environmental Protection Agency, Stationary Source Compliance Division, Washington, D.C. September 1991.

6. Handbook of Hazardous Materials: Fire, Safety, Health. Alliance of American Insurers. Schaumberg, IL. 1983.

17.0 Tables, Diagrams, Flowcharts, and Validation Data [Reserved]

METHOD 25—DETERMINATION OF TOTAL GASEOUS NONMETHANE ORGANIC EMISSIONS AS CARBON

1.0 Scope and Application

1.1 Analytes.

Analyte	CAS No.	Sensitivity
Total gaseous nonmethane organic compounds (TGNMO)	N/A	Dependent upon analytical equipment.

1.2 Applicability.

1.2.1 This method is applicable for the determination of volatile organic compounds (VOC) (measured as total gaseous nonmethane organics (TGNMO) and reported as carbon) in stationary source emissions. This method is not applicable for the determination of organic particulate matter.

1.2.2 This method is not the only method that applies to the measurement of VOC. Costs, logistics, and other practicalities of source testing may make other test methods more desirable for measuring VOC contents of certain effluent streams. Proper judgment is required in determining the most applicable VOC test method. For example, depending upon the molecular composition of the organics in the effluent stream, a totally automated semicontinuous nonmethane organics (NMO) analyzer interfaced directly to the source may yield accurate results. This approach has the advantage of providing emission data semicontinuously over an extended time period.

1.2.3 Direct measurement of an effluent with a flame ionization detector (FID) analyzer may be appropriate with prior characterization of the gas stream and knowledge that the detector responds predictably to the organic compounds in the stream. If present, methane (CH_4) will, of course, also be measured. The FID can be used under any of the following limited conditions: (1) Where only one compound is known to exist; (2) when the organic compounds consist of only hydrogen and carbon; (3) where the relative percentages of the compounds are known or can be determined, and the FID responses to the compounds are known; (4) where a consistent mixture of the compounds exists before and after emission control and only the relative concentrations are to be assessed; or (5) where the FID can be calibrated against mass standards of the compounds emitted (solvent emissions, for example).

1.2.4 Another example of the use of a direct FID is as a screening method. If there is enough information available to provide a rough estimate of the analyzer accuracy, the FID analyzer can be used to determine the VOC content of an uncharacterized gas stream. With a sufficient buffer to account for possible inaccuracies, the direct FID can be a useful tool to obtain the desired results without costly exact determination.

1.2.5 In situations where a qualitative/quantitative analysis of an effluent stream is desired or required, a gas chromatographic FID system may apply. However, for sources emitting numerous organics, the time and expense of this approach will be formidable.

2.0 Summary of Method

2.1 An emission sample is withdrawn from the stack at a constant rate through a heated filter and a chilled condensate trap by means of an evacuated sample tank. After sampling is completed, the TGNMO are determined by independently analyzing the condensate trap and sample tank fractions and combining the analytical results. The organic content of the condensate trap fraction is determined by oxidizing the NMO to carbon dioxide (CO_2) and quantitatively collecting in the effluent in an evacuated vessel; then a portion of the CO_2 is reduced to CH_4 and measured by an FID. The organic content of the sample tank fraction is measured by injecting a portion of the sample into a gas chromatographic column to separate the NMO from carbon monoxide (CO), CO_2, and CH_4; the NMO are oxidized to CO_2, reduced to CH_4, and measured by an FID. In this manner, the variable response of the FID associated with different types of organics is eliminated.

3.0 Definitions [Reserved]

4.0 Interferences

4.1 Carbon Dioxide and Water Vapor. When carbon dioxide (CO_2) and water vapor are present together in the stack, they can produce a positive bias in the sample. The magnitude of the bias depends on the concentrations of CO_2 and water vapor. As a guideline, multiply the CO_2 concentration, expressed as volume percent, times the water vapor concentration. If this product does not exceed 100, the bias can be considered insignificant. For example, the bias is not significant for a source having 10 percent CO_2 and 10 percent water vapor, but it might be significant for a source having 10 percent CO_2 and 20 percent water vapor.

4.2. Particulate Matter. Collection of organic particulate matter in the condensate trap would produce a positive bias. A filter is included in the sampling equipment to minimize this bias.

5.0 Safety

5.1 Disclaimer. This method may involve hazardous materials, operations, and equipment. This test method may not address all of the safety problems associated with its use. It is the responsibility of the user of this test method to establish appropriate safety and health practices and determine the applicability of regulatory limitations prior to performing this test method.

6.0 Equipment and Supplies

6.1 Sample Collection. The sampling system consists of a heated probe, heated filter, condensate trap, flow control system, and sample tank (see Figure 25–1). The TGNMO sampling equipment can be constructed from commercially available components and components fabricated in a machine shop. The following equipment is required:

6.1.1 Heated Probe. 6.4-mm (¼-in.) OD stainless steel tubing with a heating system

capable of maintaining a gas temperature at the exit end of at least 129 °C (265 °F). The probe shall be equipped with a temperature sensor at the exit end to monitor the gas temperature. A suitable probe is shown in Figure 25–1. The nozzle is an elbow fitting attached to the front end of the probe while the temperature sensor is inserted in the side arm of a tee fitting attached to the rear of the probe. The probe is wrapped with a suitable length of high temperature heating tape, and then covered with two layers of glass cloth insulation and one layer of aluminum foil or an equivalent wrapping.

NOTE: If it is not possible to use a heating system for safety reasons, an unheated system with an in-stack filter is a suitable alternative.

6.1.2 Filter Holder. 25-mm (15/16-in.) ID Gelman filter holder with 303 stainless steel body and 316 stainless steel support screen with the Viton O-ring replaced by a Teflon O-ring.

6.1.3 Filter Heating System.

6.1.3.1 A metal box consisting of an inner and an outer shell separated by insulating material with a heating element in the inner shell capable of maintaining a gas temperature at the filter of 121 ±3 °C (250 ±5 °F). The heating box shall include temperature sensors to monitor the gas temperature immediately upstream and immediately downstream of the filter.

6.1.3.2 A suitable heating box is shown in Figure 25–2. The outer shell is a metal box that measures 102 mm×280 mm×292 mm (4 in.×11 in.×11½ in.), while the inner shell is a metal box measuring 76 mm×229 mm×241 mm (3 in.×9 in.×9½ in.). The inner box is supported by 13-mm (½-in.) phenolic rods. The void space between the boxes is filled with ceramic fiber insulation which is sealed in place by means of a silicon rubber bead around the upper sides of the box. A removable lid made in a similar manner, with a 25-mm (1-in.) gap between the parts is used to cover the heating chamber. The inner box is heated with a 250-watt cartridge heater, shielded by a stainless steel shroud. The heater is regulated by a thermostatic temperature controller which is set to maintain a gas temperature of 121 °C (250 °F) as measured by the temperature sensor upstream of the filter.

NOTE: If it is not possible to use a heating system for safety reasons, an unheated system with an in-stack filter is a suitable alternative.

6.1.4 Condensate Trap. 9.5-mm (⅜-in.) OD 316 stainless steel tubing bent into a U-shape. Exact dimensions are shown in Figure 25–3. The tubing shall be packed with coarse quartz wool, to a density of approximately 0.11 g/cm^3 before bending. While the condensate trap is packed with dry ice in the Dewar, an ice bridge may form between the arms of the condensate trap making it difficult to remove the condensate trap. This problem can be prevented by attaching a steel plate between the arms of the condensate trap in the same plane as the arms to completely fill the intervening space.

6.1.5 Valve. Stainless steel control valve for starting and stopping sample flow.

6.1.6 Metering Valve. Stainless steel valve for regulating the sample flow rate through the sample train.

6.1.7 Rate Meter. Rotameter, or equivalent, capable of measuring sample flow in the range of 60 to 100 cm^3/min (0.13 to 0.21 ft^3/hr).

6.1.8 Sample Tank. Stainless steel or aluminum tank with a minimum volume of 4 liters (0.14 ft^3).

NOTE: Sample volumes greater than 4 liters may be required for sources with low organic concentrations.

6.1.9 Mercury Manometer. U-tube manometer or absolute pressure gauge capable of measuring pressure to within 1 mm Hg in the range of 0 to 900 mm.

6.1.10 Vacuum Pump. Capable of evacuating to an absolute pressure of 10 mm Hg.

6.2 Condensate Recovery. The system for the recovery of the organics captured in the condensate trap consists of a heat source, an oxidation catalyst, a nondispersive infrared (NDIR) analyzer, and an intermediate collection vessel (ICV). Figure 25–4 is a schematic of a typical system. The system shall be capable of proper oxidation and recovery, as specified in Section 10.1.1. The following major components are required:

6.2.1 Heat Source. Sufficient to heat the condensate trap (including probe) to a temperature of 200 °C (390 °F). A system using both a heat gun and an electric tube furnace is recommended.

6.2.2 Heat Tape. Sufficient to heat the connecting tubing between the water trap and the oxidation catalyst to 100 °C (212 °F).

6.2.3 Oxidation Catalyst. A suitable length of 9.5 mm (⅜-in.) OD Inconel 600 tubing packed with 15 cm (6 in.) of 3.2 mm (⅜-in.) diameter 19 percent chromia on alumina pellets. The catalyst material is packed in the center of the catalyst tube with quartz wool packed on either end to hold it in place.

6.2.4 Water Trap. Leak-proof, capable of removing moisture from the gas stream.

6.2.5 Syringe Port. A 6.4-mm (¼-in.) OD stainless steel tee fitting with a rubber septum placed in the side arm.

6.2.6 NDIR Detector. Capable of indicating CO_2 concentration in the range of zero to 5 percent, to monitor the progress of combustion of the organic compounds from the condensate trap.

6.2.7 Flow-Control Valve. Stainless steel, to maintain the trap conditioning system near atmospheric pressure.

6.2.8 Intermediate Collection Vessel. Stainless steel or aluminum, equipped with a female quick connect. Tanks with nominal volumes of at least 6 liters (0.2 ft^3) are recommended.

6.2.9 Mercury Manometer. Same as described in Section 6.1.9.

6.2.10 Syringe. 10-ml gas-tight glass syringe equipped with an appropriate needle.

6.2.11 Syringes. 10-µl and 50-µl liquid injection syringes.

6.2.12 Liquid Sample Injection Unit. 316 Stainless steel U-tube fitted with an injection septum (see Figure 25–7).

6.3 Analysis.

6.3.1 NMO Analyzer. The NMO analyzer is a gas chromatograph (GC) with backflush capability for NMO analysis and is equipped with an oxidation catalyst, reduction catalyst, and FID. Figures 25–5 and 25–6 are schematics of a typical NMO analyzer. This semicontinuous GC/FID analyzer shall be capable of: (1) Separating CO, CO_2, and CH_4 from NMO, (2) reducing the CO_2 to CH_4 and quantifying as CH_4, and (3) oxidizing the NMO to CO_2, reducing the CO_2 to CH_4 and quantifying as CH_4, according to Section 10.1.2. The analyzer consists of the following major components:

6.3.1.1 Oxidation Catalyst. A suitable length of 9.5-mm (⅜-in.) OD Inconel 600 tubing packed with 5.1 cm (2 in.) of 19 percent chromia on 3.2-mm (⅛-in.) alumina pellets. The catalyst material is packed in the center of the tube supported on either side by quartz wool. The catalyst tube must be mounted vertically in a 650 °C (1200 °F) furnace. Longer catalysts mounted horizontally may be used, provided they can meet the specifications of Section 10.1.2.1.

6.3.1.2 Reduction Catalyst. A 7.6-cm (3-in.) length of 6.4-mm (¼-in.) OD Inconel tubing fully packed with 100-mesh pure nickel powder. The catalyst tube must be mounted vertically in a 400 °C (750 °F) furnace.

6.3.1.3 Separation Column(s). A 30-cm (1-ft) length of 3.2-mm (⅛-in.) OD stainless steel tubing packed with 60/80 mesh Unibeads 1S followed by a 61-cm (2-ft) length of 3.2-mm (⅛-in.) OD stainless steel tubing packed with 60/80 mesh Carbosieve G. The Carbosieve and Unibeads columns must be baked separately at 200 °C (390 °F) with carrier gas flowing through them for 24 hours before initial use.

6.3.1.4 Sample Injection System. A single 10-port GC sample injection valve or a group of valves with sufficient ports fitted with a sample loop properly sized to interface with the NMO analyzer (1-cc loop recommended).

6.3.1.5 FID. An FID meeting the following specifications is required:

6.3.1.5.1 Linearity. A linear response (±5 percent) over the operating range as demonstrated by the procedures established in Section 10.1.2.3.

6.3.1.5.2 Range. A full scale range of 10 to 50,000 ppm CH_4. Signal attenuators shall be available to produce a minimum signal response of 10 percent of full scale.

6.3.1.6 Data Recording System. Analog strip chart recorder or digital integration system compatible with the FID for permanently recording the analytical results.

6.3.2 Barometer. Mercury, aneroid, or other barometer capable of measuring atmospheric pressure to within 1 mm Hg.

6.3.3 Temperature Sensor. Capable of measuring the laboratory temperature within 1 °C (2 °F).

6.3.4 Vacuum Pump. Capable of evacuating to an absolute pressure of 10 mm Hg.

7.0 Reagents and Standards

7.1 Sample Collection. The following reagents are required for sample collection:

7.1.1 Dry Ice. Solid CO2, crushed.

7.1.2 Coarse Quartz Wool. 8 to 15 um.

7.1.3 Filters. Glass fiber filters, without organic binder.

7.2 NMO Analysis. The following gases are required for NMO analysis:

7.2.1 Carrier Gases. Helium (He) and oxygen (O_2) containing less than 1 ppm CO_2 and less than 0.1 ppm hydrocarbon.

7.2.2 Fuel Gas. Hydrogen (H_2), at least 99.999 percent pure.

7.2.3 Combustion Gas. Either air (less than 0.1 ppm total hydrocarbon content) or O_2 (purity 99.99 percent or greater), as required by the detector.

7.3 Condensate Analysis. The following are required for condensate analysis:

7.3.1 Gases. Containing less than 1 ppm carbon.

7.3.1.1 Air.

7.3.1.2 Oxygen.

7.3.2 Liquids. To conform to the specifications established by the Committee on Analytical Reagents of the American Chemical Society.

7.3.2.1 Hexane.

7.3.2.2 Decane.

7.4 Calibration. For all calibration gases, the manufacturer must recommend a maximum shelf life for each cylinder (i.e., the length of time the gas concentration is not expected to change more than ±5 percent from its certified value). The date of gas cylinder preparation, certified organic concentration, and recommended maximum shelf life must be affixed to each cylinder before shipment from the gas manufacturer to the buyer. The following calibration gases are required:

7.4.1 Oxidation Catalyst Efficiency Check Calibration Gas. Gas mixture standard with nominal concentration of 1 percent methane in air.

7.4.2 FID Linearity and NMO Calibration Gases. Three gas mixture standards with nominal propane concentrations of 20 ppm, 200 ppm, and 3000 ppm, in air.

7.4.3 CO_2 Calibration Gases. Three gas mixture standards with nominal CO_2 concentrations of 50 ppm, 500 ppm, and 1 percent, in air.

NOTE: Total NMO less than 1 ppm required for 1 percent mixture.

7.4.4 NMO Analyzer System Check Calibration Gases. Four calibration gases are needed as follows:

7.4.4.1 Propane Mixture. Gas mixture standard containing (nominal) 50 ppm CO, 50 ppm CH_4, 1 percent CO_2, and 20 ppm C_3H_8, prepared in air.

7.4.4.2 Hexane. Gas mixture standard containing (nominal) 50 ppm hexane in air.

7.4.4.3 Toluene. Gas mixture standard containing (nominal) 20 ppm toluene in air.

7.4.4.4 Methanol. Gas mixture standard containing (nominal) 100 ppm methanol in air.

7.5 Quality Assurance Audit Samples.

7.5.1 It is recommended, but not required, that a performance audit sample be analyzed in conjunction with the field samples. The audit sample should be in a suitable sample matrix at a concentration similar to the actual field samples.

7.5.2 When making compliance determinations, and upon availability, audit samples may be obtained from the appropriate EPA Regional Office or from the responsible enforcement authority and analyzed in conjunction with the field samples.

NOTE: The responsible enforcement authority should be notified at least 30 days prior to the test date to allow sufficient time for sample delivery.

8.0 Sample Collection, Preservation, Transport, and Storage

8.1 Sampling Equipment Preparation.

8.1.1 Condensate Trap Cleaning. Before its initial use and after each use, a condensate trap should be thoroughly cleaned and checked to ensure that it is not contaminated. Both cleaning and checking can be accomplished by installing the trap in the condensate recovery system and treating it as if it were a sample. The trap should be heated as described in Section 11.1.3. A trap may be considered clean when the CO_2 concentration in its effluent gas drops below 10 ppm. This check is optional for traps that most recently have been used to collect samples which were then recovered according to the procedure in Section 11.1.3.

8.1.2 Sample Tank Evacuation and Leak-Check. Evacuate the sample tank to 10 mm Hg absolute pressure or less. Then close the sample tank valve, and allow the tank to sit for 60 minutes. The tank is acceptable if a change in tank vacuum of less than 1 mm Hg is noted. The evacuation and leak-check may be conducted either in the laboratory or the field.

8.1.3 Sampling Train Assembly. Just before assembly, measure the tank vacuum using a mercury manometer. Record this vacuum, the ambient temperature, and the barometric pressure at this time. Close the sample tank valve and assemble the sampling system as shown in Figure 25–1. Immerse the condensate trap body in dry ice at least 30 minutes before commencing sampling to improve collection efficiency. The point where the inlet tube joins the trap body should be 2.5 to 5 cm (1 to 2 in.) above the top of the dry ice.

8.1.4 Pretest Leak-Check. A pretest leak-check is required. Calculate or measure the approximate volume of the sampling train from the probe tip to the sample tank valve. After assembling the sampling train, plug the probe tip, and make certain that the sample tank valve is closed. Turn on the vacuum pump, and evacuate the sampling system from the probe tip to the sample tank valve to an absolute pressure of 10 mm Hg or less. Close the purge valve, turn off the pump, wait a minimum period of 10 minutes, and recheck the indicated vacuum. Calculate the maximum allowable pressure change based on a leak rate of 1 percent of the sampling rate using Equation 25–1, Section 12.2. If the measured pressure change exceeds the allowable, correct the problem and repeat the leak-check before beginning sampling.

8.2 Sample Collection.

8.2.1 Unplug the probe tip, and place the probe into the stack such that the probe is perpendicular to the duct or stack axis; locate the probe tip at a single preselected point of average velocity facing away from the direction of gas flow. For stacks having a negative static pressure, seal the sample port sufficiently to prevent air in-leakage around the probe. Set the probe temperature controller to 129 °C (265 °F) and the filter temperature controller to 121 °C (250 °F). Allow the probe and filter to heat for about 30 minutes before purging the sample train.

8.2.2 Close the sample valve, open the purge valve, and start the vacuum pump. Set the flow rate between 60 and 100 cm^3/min (0.13 and 0.21 ft^3/hr), and purge the train with stack gas for at least 10 minutes.

8.2.3 When the temperatures at the exit ends of the probe and filter are within the corresponding specified ranges, check the dry ice level around the condensate trap, and add dry ice if necessary. Record the clock time. To begin sampling, close the purge valve and stop the pump. Open the sample valve and the sample tank valve. Using the flow control valve, set the flow through the sample train to the proper rate. Adjust the flow rate as necessary to maintain a constant rate (±10 percent) throughout the duration of the sampling period. Record the sample tank vacuum and flowmeter setting at 5-minute intervals. (See Figure 25–8.) Select a total sample time greater than or equal to

the minimum sampling time specified in the applicable subpart of the regulations; end the sampling when this time period is reached or when a constant flow rate can no longer be maintained because of reduced sample tank vacuum.

NOTE: If sampling had to be stopped before obtaining the minimum sampling time (specified in the applicable subpart) because a constant flow rate could not be maintained, proceed as follows: After closing the sample tank valve, remove the used sample tank from the sampling train (without disconnecting other portions of the sampling train). Take another evacuated and leak-checked sample tank, measure and record the tank vacuum, and attach the new tank to the sampling train. After the new tank is attached to the sample train, proceed with the sampling until the required minimum sampling time has been exceeded.

8.3 Sample Recovery. After sampling is completed, close the flow control valve, and record the final tank vacuum; then record the tank temperature and barometric pressure. Close the sample tank valve, and disconnect the sample tank from the sample system. Disconnect the condensate trap at the inlet to the rate meter, and tightly seal both ends of the condensate trap. Do not include the probe from the stack to the filter as part of the condensate sample.

8.4 Sample Storage and Transport. Keep the trap packed in dry ice until the samples are returned to the laboratory for analysis. Ensure that run numbers are identified on the condensate trap and the sample tank(s).

9.0 Quality Control

Section	Quality control measure	Effect
10.1.1	Initial performance check of condensate recovery apparatus.	Ensure acceptable condensate recovery efficiency.
10.1.2, 10.2	NMO analyzer initial and daily performance checks.	Ensure precision of analytical results.
11.3	Audit Sample Analyses	Evaluate analytical technique and instrument calibration.

10.0 Calibration and Standardization

NOTE: Maintain a record of performance of each item.

10.1 Initial Performance Checks.

10.1.1 Condensate Recovery Apparatus. Perform these tests before the system is first placed in operation, after any shutdown of 6 months or more, and after any major modification of the system, or at the frequency recommended by the manufacturer.

10.1.1.1 Carrier Gas and Auxiliary O_2 Blank Check. Analyze each new tank of carrier gas or auxiliary O_2 with the NMO analyzer to check for contamination. Treat the gas cylinders as noncondensible gas samples, and analyze according to the procedure in Section 11.2.3. Add together any measured CH_4, CO, CO_2, or NMO. The total concentration must be less than 5 ppm.

10.1.1.2 Oxidation Catalyst Efficiency Check.

10.1.1.2.1 With a clean condensate trap installed in the recovery system or a ⅛″ stainless steel connector tube, replace the carrier gas cylinder with the high level methane standard gas cylinder (Section 7.4.1). Set the four-port valve to the recovery position, and attach an ICV to the recovery system. With the sample recovery valve in vent position and the flow-control and ICV valves fully open, evacuate the manometer or gauge, the connecting tubing, and the ICV to 10 mm Hg absolute pressure. Close the flow-control and vacuum pump valves.

10.1.1.2.2 After the NDIR response has stabilized, switch the sample recovery valve from vent to collect. When the manometer or pressure gauge begins to register a slight positive pressure, open the flow-control valve. Keep the flow adjusted such that the pressure in the system is maintained within 10 percent of atmospheric pressure. Continue collecting the sample in a normal manner until the ICV is filled to a nominal gauge pressure of 300 mm Hg. Close the ICV valve, and remove the ICV from the system. Place the sample recovery valve in the vent position, and return the recovery system to its normal carrier gas and normal operating conditions. Analyze the ICV for CO_2 using the NMO analyzer; the catalyst efficiency is acceptable if the CO_2 concentration is within 2 percent of the methane standard concentration.

10.1.1.3 System Performance Check. Construct a liquid sample injection unit similar in design to the unit shown in Figure 25–7. Insert this unit into the condensate recovery and conditioning system in place of a condensate trap, and set the carrier gas and auxiliary O_2 flow rates to normal operating levels. Attach an evacuated ICV to the system, and switch from system vent to collect. With the carrier gas routed through the injection unit and the oxidation catalyst, inject a liquid sample (see Sections 10.1.1.3.1 to 10.1.1.3.4) into the injection port. Operate the trap recovery system as described in Section 11.1.3. Measure the final ICV pressure, and then analyze the vessel to determine the CO_2

concentration. For each injection, calculate the percent recovery according to Section 12.7. Calculate the relative standard deviation for each set of triplicate injections according to Section 12.8. The performance test is acceptable if the average percent recovery is 100 ±5 percent and the relative standard deviation is less than 2 percent for each set of triplicate injections.

10.1.1.3.1 50 µl hexane.

10.1.1.3.2 10 µl hexane.

10.1.1.3.3 50 µl decane.

10.1.1.3.4 10 µl decane.

10.1.2 NMO Analyzer. Perform these tests before the system is first placed in operation, after any shutdown longer than 6 months, and after any major modification of the system.

10.1.2.1 Oxidation Catalyst Efficiency Check. Turn off or bypass the NMO analyzer reduction catalyst. Make triplicate injections of the high level methane standard (Section 7.4.1). The oxidation catalyst operation is acceptable if the FID response is less than 1 percent of the injected methane concentration.

10.1.2.2 Reduction Catalyst Efficiency Check. With the oxidation catalyst unheated or bypassed and the heated reduction catalyst bypassed, make triplicate injections of the high level methane standard (Section 7.4.1). Repeat this procedure with both catalysts operative. The reduction catalyst operation is acceptable if the responses under both conditions agree within 5 percent of their average.

10.1.2.3 NMO Analyzer Linearity Check Calibration. While operating both the oxidation and reduction catalysts, conduct a linearity check of the analyzer using the propane standards specified in Section 7.4.2. Make triplicate injections of each calibration gas. For each gas (*i.e.*, each set of triplicate injections), calculate the average response factor (area/ppm C) for each gas, as well as and the relative standard deviation (according to Section 12.8). Then calculate the overall mean of the response factor values. The instrument linearity is acceptable if the average response factor of each calibration gas is within 2.5 percent of the overall mean value and if the relative standard deviation gas is less than 2 percent of the overall mean value. Record the overall mean of the propane response factor values as the NMO calibration response factor (RF_{NMO}). Repeat the linearity check using the CO_2 standards specified in Section 7.4.3. Make triplicate injections of each gas, and then calculate the average response factor (area/ppm C) for each gas, as well as the overall mean of the response factor values. Record the overall mean of the response factor values as the CO_2 calibration response factor (RF_{CO2}). The RF_{CO2} must be within 10 percent of the RF_{NMO}.

10.1.2.4 System Performance Check. Check the column separation and overall performance of the analyzer by making triplicate injections of the calibration gases listed in Section 7.4.4. The analyzer performance is acceptable if the measured NMO value for each gas (average of triplicate injections) is within 5 percent of the expected value.

10.2 NMO Analyzer Daily Calibration. The following calibration procedures shall be performed before and immediately after the analysis of each set of samples, or on a daily basis, whichever is more stringent:

10.2.1 CO_2 Response Factor. Inject triplicate samples of the high level CO_2 calibration gas (Section 7.4.3), and calculate the average response factor. The system operation is adequate if the calculated response factor is within 5 percent of the RF_{CO2} calculated during the initial performance test (Section 10.1.2.3). Use the daily response factor (DRF_{CO2}) for analyzer calibration and the calculation of measured CO_2 concentrations in the ICV samples.

10.2.2 NMO Response Factors. Inject triplicate samples of the mixed propane calibration cylinder gas (Section 7.4.4.1), and calculate the average NMO response factor. The system operation is adequate if the calculated response factor is within 10 percent of the RF_{NMO} calculated during the initial performance test (Section 10.1.2.4). Use the daily response factor (DRF_{NMO}) for analyzer calibration and calculation of NMO concentrations in the sample tanks.

10.3 Sample Tank and ICV Volume. The volume of the gas sampling tanks used must be determined. Determine the tank and ICV volumes by weighing them empty and then filled with deionized distilled water; weigh to the nearest 5 g, and record the results. Alternatively, measure the volume of water used to fill them to the nearest 5 ml.

11.0 Analytical Procedure

11.1 Condensate Recovery. See Figure 25–9. Set the carrier gas flow rate, and heat the catalyst to its operating temperature to condition the apparatus.

11.1.1 Daily Performance Checks. Each day before analyzing any samples, perform the following tests:

11.1.1.1 Leak-Check. With the carrier gas inlets and the sample recovery valve closed, install a clean condensate trap in the system, and evacuate the system to 10 mm Hg absolute pressure or less. Monitor the system pressure for 10 minutes. The system is acceptable if the pressure change is less than 2 mm Hg.

11.1.1.2 System Background Test. Adjust the carrier gas and auxiliary oxygen flow rate to their normal values of 100 cc/min and 150 cc/min, respectively, with the sample recovery valve in vent position. Using a 10-ml syringe, withdraw a sample from the system effluent through the syringe port. Inject this

sample into the NMO analyzer, and measure the CO_2 content. The system background is acceptable if the CO_2 concentration is less than 10 ppm.

11.1.1.3 Oxidation Catalyst Efficiency Check. Conduct a catalyst efficiency test as specified in Section 10.1.1.2. If the criterion of this test cannot be met, make the necessary repairs to the system before proceeding.

11.1.2 Condensate Trap CO_2 Purge and Sample Tank Pressurization.

11.1.2.1 After sampling is completed, the condensate trap will contain condensed water and organics and a small volume of sampled gas. This gas from the stack may contain a significant amount of CO_2 which must be removed from the condensate trap before the sample is recovered. This is accomplished by purging the condensate trap with zero air and collecting the purged gas in the original sample tank.

11.1.2.2 Begin with the sample tank and condensate trap from the test run to be analyzed. Set the four-port valve of the condensate recovery system in the CO_2 purge position as shown in Figure 25–9. With the sample tank valve closed, attach the sample tank to the sample recovery system. With the sample recovery valve in the vent position and the flow control valve fully open, evacuate the manometer or pressure gauge to the vacuum of the sample tank. Next, close the vacuum pump valve, open the sample tank valve, and record the tank pressure.

11.1.2.3 Attach the dry ice-cooled condensate trap to the recovery system, and initiate the purge by switching the sample recovery valve from vent to collect position. Adjust the flow control valve to maintain atmospheric pressure in the recovery system. Continue the purge until the CO_2 concentration of the trap effluent is less than 5 ppm. CO_2 concentration in the trap effluent should be measured by extracting syringe samples from the recovery system and analyzing the samples with the NMO analyzer. This procedure should be used only after the NDIR response has reached a minimum level. Using a 10-ml syringe, extract a sample from the syringe port prior to the NDIR, and inject this sample into the NMO analyzer.

11.1.2.4 After the completion of the CO_2 purge, use the carrier gas bypass valve to pressurize the sample tank to approximately 1,060 mm Hg absolute pressure with zero air.

11.1.3 Recovery of the Condensate Trap Sample (See Figure 25–10).

11.1.3.1 Attach the ICV to the sample recovery system. With the sample recovery valve in a closed position, between vent and collect, and the flow control and ICV valves fully open, evacuate the manometer or gauge, the connecting tubing, and the ICV to 10 mm Hg absolute pressure. Close the flow-control and vacuum pump valves.

11.1.3.2 Begin auxiliary oxygen flow to the oxidation catalyst at a rate of 150 cc/min, then switch the four-way valve to the trap recovery position and the sample recovery valve to collect position. The system should now be set up to operate as indicated in Figure 25–10. After the manometer or pressure gauge begins to register a slight positive pressure, open the flow control valve. Adjust the flow-control valve to maintain atmospheric pressure in the system within 10 percent.

11.1.3.3 Remove the condensate trap from the dry ice, and allow it to warm to ambient temperature while monitoring the NDIR response. If, after 5 minutes, the CO_2 concentration of the catalyst effluent is below 10,000 ppm, discontinue the auxiliary oxygen flow to the oxidation catalyst. Begin heating the trap by placing it in a furnace preheated to 200 °C (390 °F). Once heating has begun, carefully monitor the NDIR response to ensure that the catalyst effluent concentration does not exceed 50,000 ppm. Whenever the CO_2 concentration exceeds 50,000 ppm, supply auxiliary oxygen to the catalyst at the rate of 150 cc/min. Begin heating the tubing that connected the heated sample box to the condensate trap only after the CO_2 concentration falls below 10,000 ppm. This tubing may be heated in the same oven as the condensate trap or with an auxiliary heat source such as a heat gun. Heating temperature must not exceed 200 °C (390 °F). If a heat gun is used, heat the tubing slowly along its entire length from the upstream end to the downstream end, and repeat the pattern for a total of three times. Continue the recovery until the CO_2 concentration drops to less than 10 ppm as determined by syringe injection as described under the condensate trap CO_2 purge procedure (Section 11.1.2).

11.1.3.4 After the sample recovery is completed, use the carrier gas bypass valve to pressurize the ICV to approximately 1060 mm Hg absolute pressure with zero air.

11.2 Analysis. Once the initial performance test of the NMO analyzer has been successfully completed (see Section 10.1.2) and the daily CO_2 and NMO response factors have been determined (see Section 10.2), proceed with sample analysis as follows:

11.2.1 Operating Conditions. The carrier gas flow rate is 29.5 cc/min He and 2.2 cc/min O_2. The column oven is heated to 85 °C (185 °F). The order of elution for the sample from the column is CO, CH_4, CO_2, and NMO.

11.2.2 Analysis of Recovered Condensate Sample. Purge the sample loop with sample, and then inject the sample. Under the specified operating conditions, the CO_2 in the sample will elute in approximately 100 seconds. As soon as the detector response returns to baseline following the CO_2 peak, switch the carrier gas flow to backflush, and raise the column oven temperature to 195 °C (380 °F) as rapidly as possible. A rate of 30 °C/

min (90 °F) has been shown to be adequate. Record the value obtained for the condensible organic material (C_{cm}) measured as CO_2 and any measured NMO. Return the column oven temperature to 85 °C (185 °F) in preparation for the next analysis. Analyze each sample in triplicate, and report the average C_{cm}.

11.2.3 Analysis of Sample Tank. Perform the analysis as described in Section 11.2.2, but record only the value measured for NMO (C_{tm}).

11.3 Audit Sample Analysis.

11.3.1 When the method is used to analyze samples to demonstrate compliance with a source emission regulation, an audit sample, if available, must be analyzed.

11.3.2 Concurrently analyze the audit sample and the compliance samples in the same manner to evaluate the technique of the analyst and the standards preparation.

11.3.3 The same analyst, analytical reagents, and analytical system must be used for the compliance samples and the audit sample. If this condition is met, duplicate auditing of subsequent compliance analyses for the same enforcement agency within a 30-day period is waived. An audit sample set may not be used to validate different sets of compliance samples under the jurisdiction of separate enforcement agencies, unless prior arrangements have been made with both enforcement agencies.

11.4 Audit Sample Results.

11.4.1 Calculate the audit sample concentrations and submit results using the instructions provided with the audit samples.

11.4.2 Report the results of the audit samples and the compliance determination samples along with their identification numbers, and the analyst's name to the responsible enforcement authority. Include this information with reports of any subsequent compliance analyses for the same enforcement authority during the 30-day period.

11.4.3 The concentrations of the audit samples obtained by the analyst must agree within 20 percent of the actual concentration. If the 20-percent specification is not met, reanalyze the compliance and audit samples, and include initial and reanalysis values in the test report.

11.4.4 Failure to meet the 20-percent specification may require retests until the audit problems are resolved. However, if the audit results do not affect the compliance or noncompliance status of the affected facility, the Administrator may waive the reanalysis requirement, further audits, or retests and accept the results of the compliance test. While steps are being taken to resolve audit analysis problems, the Administrator may also choose to use the data to determine the compliance or noncompliance status of the affected facility.

12.0 Data Analysis and Calculations

Carry out the calculations, retaining at least one extra significant figure beyond that of the acquired data. Round off figures after final calculations. All equations are written using absolute pressure; absolute pressures are determined by adding the measured barometric pressure to the measured gauge or manometer pressure.

12.1 Nomenclature.

C=TGNMO concentration of the effluent, ppm C equivalent.

C_c=Calculated condensible organic (condensate trap) concentration of the effluent, ppm C equivalent.

C_{cm}=Measured concentration (NMO analyzer) for the condensate trap ICV, ppm CO_2.

C_t=Calculated noncondensible organic concentration (sample tank) of the effluent, ppm C equivalent.

C_{tm}=Measured concentration (NMO analyzer) for the sample tank, ppm NMO.

F=Sampling flow rate, cc/min.

L=Volume of liquid injected, µl.

M=Molecular weight of the liquid injected, g/g-mole.

M_c=TGNMO mass concentration of the effluent, mg C/dsm^3.

N=Carbon number of the liquid compound injected (N=12 for decane, N=6 for hexane).

n=Number of data points.

P_f=Final pressure of the intermediate collection vessel, mm Hg absolute.

P_b=Barometric pressure, cm Hg.

P_{ti}=Gas sample tank pressure before sampling, mm Hg absolute.

P_t=Gas sample tank pressure after sampling, but before pressurizing, mm Hg absolute.

P_{tf}=Final gas sample tank pressure after pressurizing, mm Hg absolute.

q=Total number of analyzer injections of intermediate collection vessel during analysis (where k=injection number, 1 * * * q).

r=Total number of analyzer injections of sample tank during analysis (where j=injection number, 1 * * * r).

r=Density of liquid injected, g/cc.

T_f=Final temperature of intermediate collection vessel, °K.

T_{ti}=Sample tank temperature before sampling, °K.

T_t=Sample tank temperature at completion of sampling, °K.

T_{tf}=Sample tank temperature after pressurizing, °K.

V=Sample tank volume, m^3.

V_t=Sample train volume, cc.

V_v=Intermediate collection vessel volume, m^3.

V_s=Gas volume sampled, dsm^3.

x_i=Individual measurements.

$\bar{x}$=Mean value.

ΔP=Allowable pressure change, cm Hg.

Θ=Leak-check period, min.

12.2 Allowable Pressure Change. For the pretest leak-check, calculate the allowable pressure change using Equation 25–1:

$$\Delta P = 0.01\ \frac{FP_b\Theta}{V_t} \qquad \text{Eq. 25-1}$$

12.3 Sample Volume. For each test run, calculate the gas volume sampled using Equation 25–2:

$$V_s = 0.3857\ V\left(\frac{P_t}{T_t} - \frac{P_{ti}}{T_{ti}}\right) \qquad \text{Eq. 25-2}$$

12.4 Noncondensible Organics. For each sample tank, determine the concentration of nonmethane organics (ppm C) using Equation 25–3:

$$C_t = \left(\frac{\dfrac{P_{tf}}{T_{tf}}}{\dfrac{P_t}{T_t} - \dfrac{P_{ti}}{T_{ti}}}\right)\left(\frac{1}{r}\sum_{j=1}^{r} C_{tm_j}\right) \qquad \text{Eq. 25-3}$$

12.5 Condensible Organics. For each condensate trap determine the concentration of organics (ppm C) using Equation 25–4:

$$C_c = 0.3857\frac{V_v P_f}{V_s T_f}\left(\frac{1}{q}\sum_{k=1}^{q} C_{cm_k}\right) \qquad \text{Eq. 25-4}$$

12.6 TGNMO Mass Concentration. Determine the TGNMO mass concentration as carbon for each test run, using Equation 25–5:

$$M_c = 0.4993\left(C_t + C_c\right) \qquad \text{Eq. 25-5}$$

12.7 Percent Recovery. Calculate the percent recovery for the liquid injections to the condensate recovery and conditioning system using Equation 25–6:

$$\text{Percent Recovery} = K\ \frac{M\,V_v P_t C_{cm}}{L\,P\,T_f N} \qquad \text{Eq. 25-6}$$

where K=1.604 (°K)(g-mole)(%)/(mm Hg)(ml)(m^3)(ppm).

12.8 Relative Standard Deviation. Use Equation 25–7 to calculate the relative standard deviation (RSD) of percent recovery and analyzer linearity.

$$RSD = \frac{100}{\bar{x}}\left[\frac{\sum_{i=1}^{n}\left(x_i - \bar{x}\right)^2}{n-1}\right]^{\frac{1}{2}} \qquad \text{Eq. 25-7}$$

13.0 Method Performance

13.1 Range. The minimum detectable limit of the method has been determined to be 50 parts per million by volume (ppm). No upper limit has been established.

14.0 Pollution Prevention [Reserved]

15.0 Waste Management [Reserved]

16.0 References

1. Salo, A.E., S. Witz, and R.D. MacPhee. Determination of Solvent Vapor Concentrations by Total Combustion Analysis: A Comparison of Infrared with Flame Ionization Detectors. Paper No. 75–33.2. (Presented at the 68th Annual Meeting of the Air Pollution Control Association. Boston, MA. June 15–20, 1975.) 14 p.

2. Salo, A.E., W.L. Oaks, and R.D. MacPhee. Measuring the Organic Carbon Content of Source Emissions for Air Pollution Control. Paper No. 74–190. (Presented at the 67th Annual Meeting of the Air Pollution

Control Association. Denver, CO. June 9–13, 1974.) 25 p.

17.0 Tables, Diagrams, Flowcharts, and Validation Data

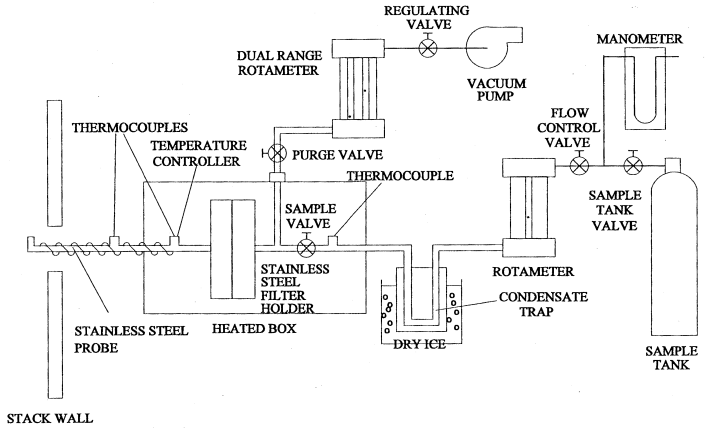

Figure 25-1. Sampling Train

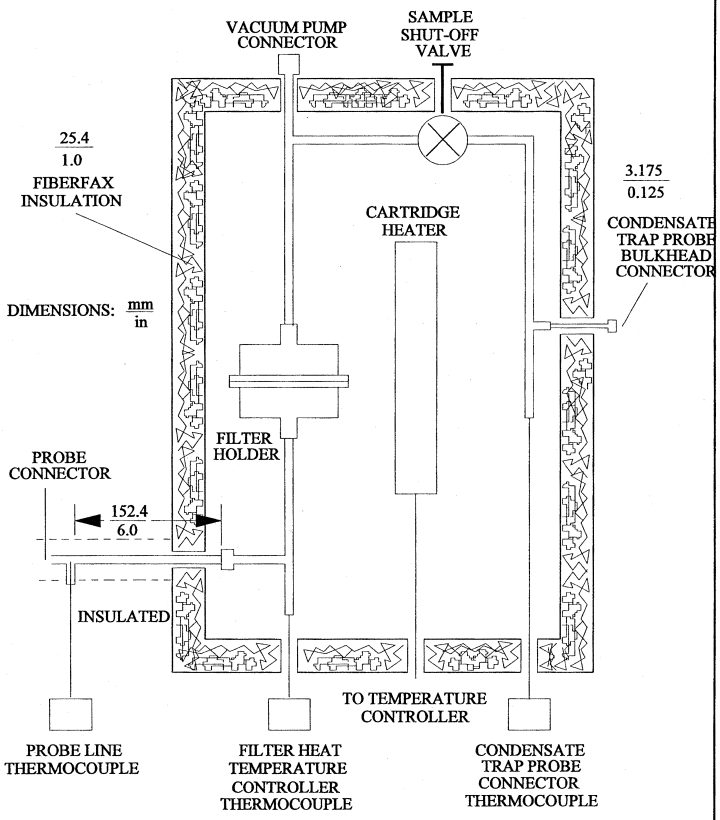

Figure 25-2. Out-of-stack Filter Box

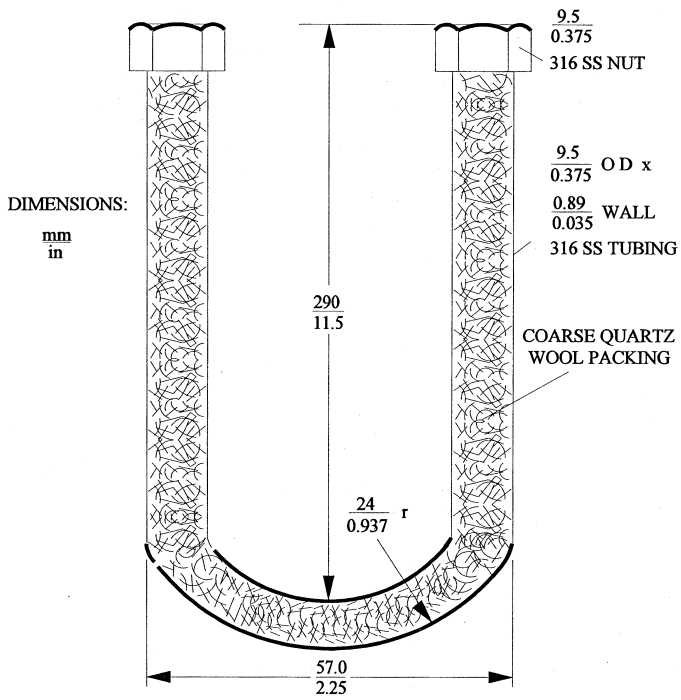

Figure 25-3. Condensate Trap

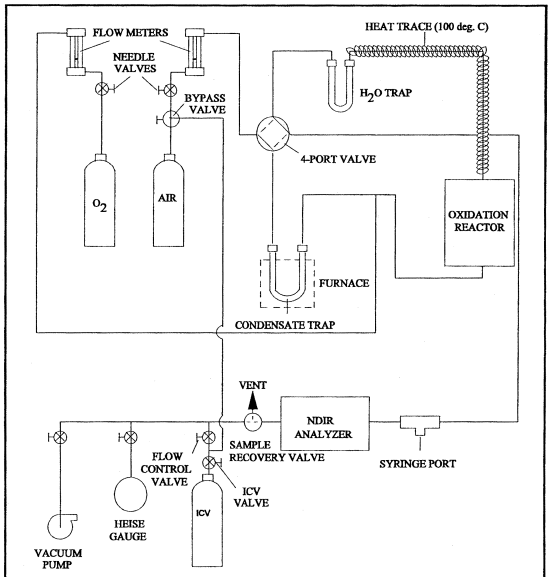

Figure 25-4. Condensate Recovery System

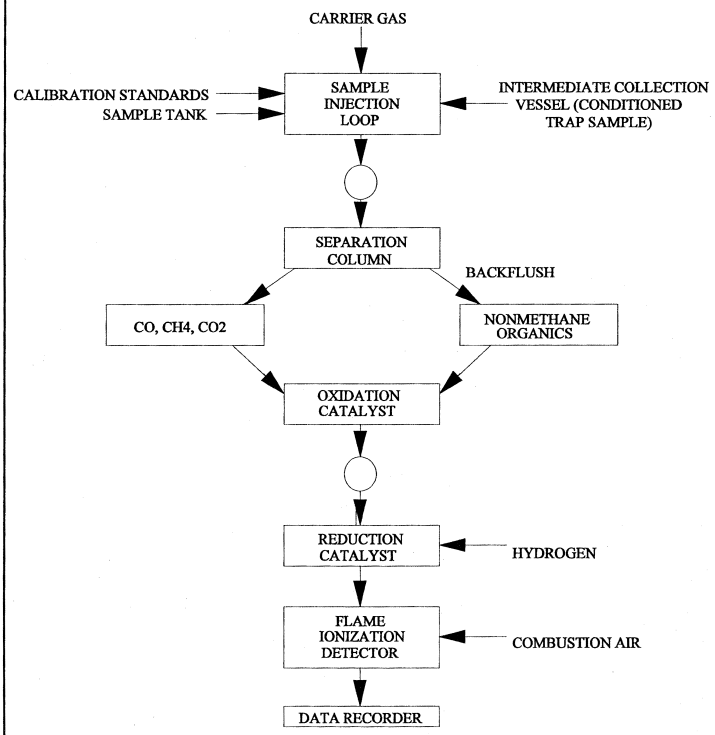

Figure 25-5. Simplified Schematic of Nonmethane Organic (NMO) Analyzer

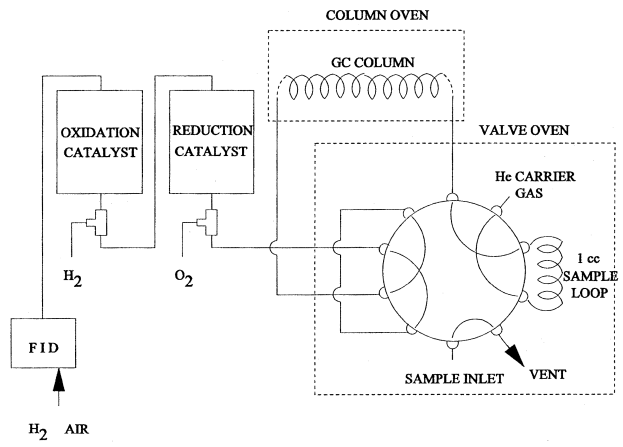

Figure 25-6. Nonmethane Organic Analyzer (NMO)

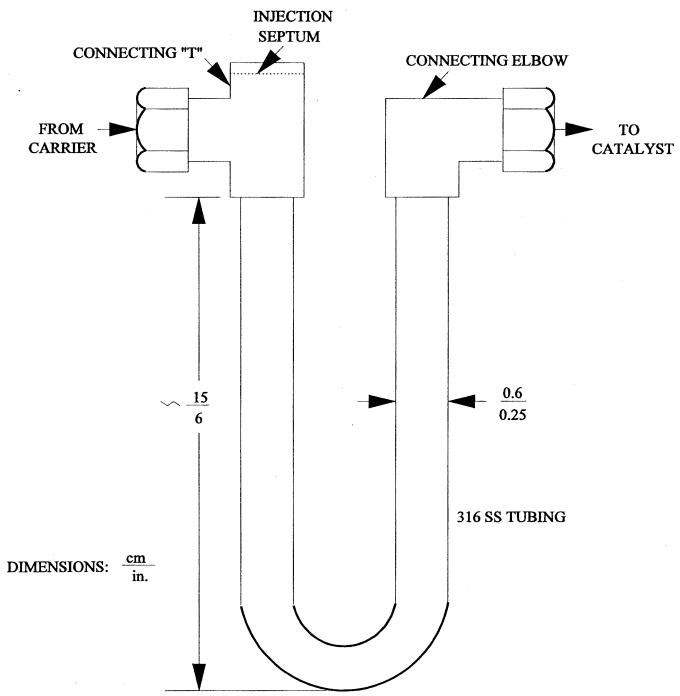

Figure 25-7. Liquid Sample Injection Unit

VOLATILE ORGANIC CARBON

FACILITY _____ SAMPLE LOCATION _____

LOCATION _____ OPERATOR _____

DATE _____ RUN NUMBER _____

TANK NUMBER _____ TRAP NUMBER _____ SAMPLE ID NUMBER _____

TANK VACUUM mm HG	TANK VACUUM cm Hg	BAROMETRIC PRESSURE mm Hg	AMBIENT TEMPERATURE °C
PRETEST (MANOMETER) _____	(GAUGE) _____		
POST-TEST (MANOMETER) _____	(GAUGE) _____		

LEAK RATE _____ cm Hg / 1.0 min.

PRETEST _____

TIME CLOCK/SAMPLE	VACUUM cm Hg	FLOWMETER SETTINGS	COMMENTS

Figure 25-8. Example Field Data Form

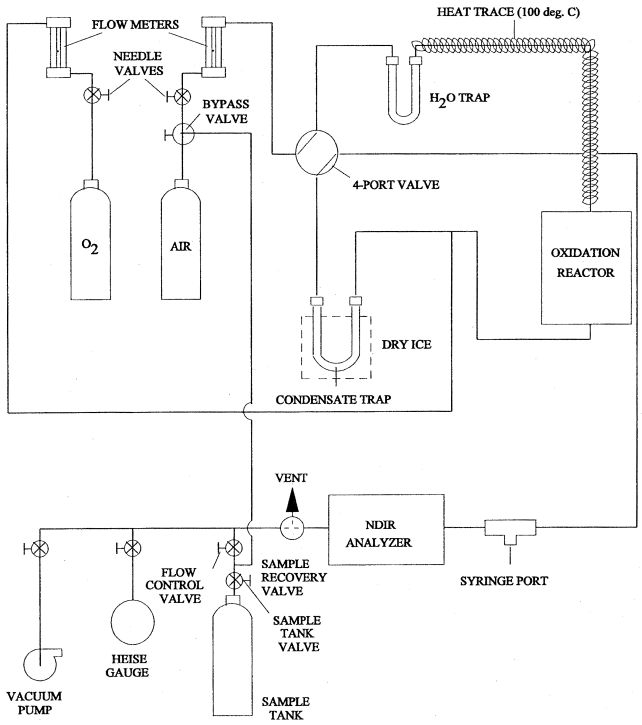

Figure 25-9. Condensate Recovery System, CO2 Purge

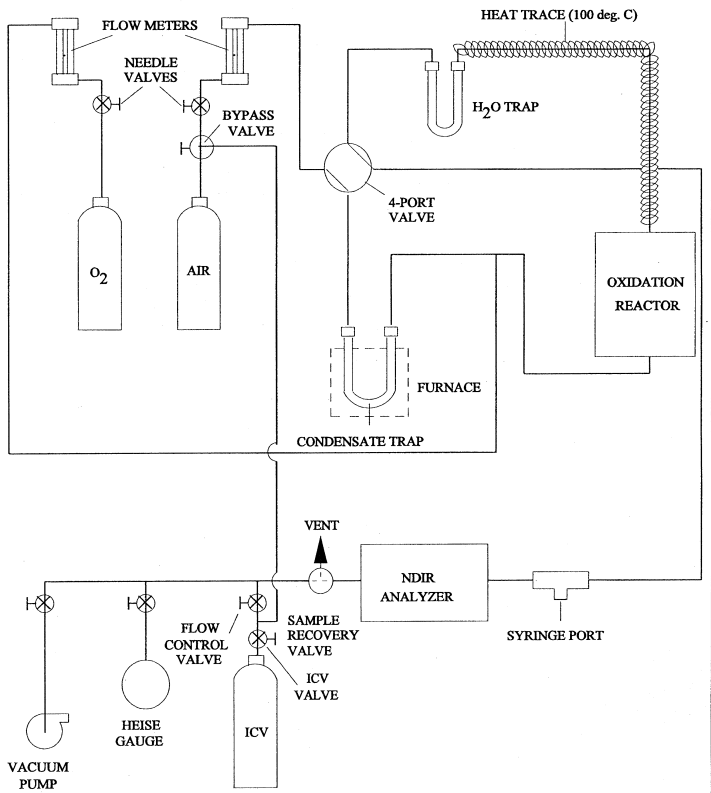

Figure 25-10. Condensate Recovery System, Collection of Trap Organics

METHOD 25A—DETERMINATION OF TOTAL GASEOUS ORGANIC CONCENTRATION USING A FLAME IONIZATION ANALYZER

1.0 Scope and Application

1.1 Analytes.

Analyte	CAS No.	Sensitivity
Total Organic Compounds	N/A	< 2% of span.

1.2 Applicability. This method is applicable for the determination of total gaseous organic concentration of vapors consisting primarily of alkanes, alkenes, and/or arenes (aromatic hydrocarbons). The concentration is expressed in terms of propane (or other appropriate organic calibration gas) or in terms of carbon.

1.3 Data Quality Objectives. Adherence to the requirements of this method will enhance the quality of the data obtained from air pollutant sampling methods.

2.0 Summary of Method

2.1 A gas sample is extracted from the source through a heated sample line and glass fiber filter to a flame ionization analyzer (FIA). Results are reported as volume concentration equivalents of the calibration gas or as carbon equivalents.

3.0 Definitions

3.1 *Calibration drift* means the difference in the measurement system response to a mid-level calibration gas before and after a stated period of operation during which no unscheduled maintenance, repair, or adjustment took place.

3.2 *Calibration error* means the difference between the gas concentration indicated by the measurement system and the know concentration of the calibration gas.

3.3 *Calibration gas* means a known concentration of a gas in an appropriate diluent gas.

3.4 *Measurement system* means the total equipment required for the determination of the gas concentration. The system consists of the following major subsystems:

3.4.1 *Sample interface* means that portion of a system used for one or more of the following: sample acquisition, sample transportation, sample conditioning, or protection of the analyzer(s) from the effects of the stack effluent.

3.4.2 *Organic analyzer* means that portion of the measurement system that senses the gas to be measured and generates an output proportional to its concentration.

3.5 *Response time* means the time interval from a step change in pollutant concentration at the inlet to the emission measurement system to the time at which 95 percent of the corresponding final value is reached as displayed on the recorder.

3.6 *Span Value* means the upper limit of a gas concentration measurement range that is specified for affected source categories in the applicable part of the regulations. The span value is established in the applicable regulation and is usually 1.5 to 2.5 times the applicable emission limit. If no span value is provided, use a span value equivalent to 1.5 to 2.5 times the expected concentration. For convenience, the span value should correspond to 100 percent of the recorder scale.

3.7 *Zero drift* means the difference in the measurement system response to a zero level calibration gas before or after a stated period of operation during which no unscheduled maintenance, repair, or adjustment took place.

4.0 Interferences [Reserved]

5.0 Safety

5.1 Disclaimer. This method may involve hazardous materials, operations, and equipment. This test method may not address all of the safety problems associated with its use. It is the responsibility of the user of this test method to establish appropriate safety and health practices and determine the applicability of regulatory limitations prior to performing this test method. The analyzer users manual should be consulted for specific precautions to be taken with regard to the analytical procedure.

5.2 Explosive Atmosphere. This method is often applied in highly explosive areas. Caution and care should be exercised in choice of equipment and installation.

6.0 Equipment and Supplies

6.1 Measurement System. Any measurement system for total organic concentration that meets the specifications of this method. A schematic of an acceptable measurement system is shown in Figure 25A–1. All sampling components leading to the analyzer shall be heated ≥ 110 °C (220 °F) throughout the sampling period, unless safety reasons are cited (Section 5.2) The essential components of the measurement system are described below:

6.1.1 Organic Concentration Analyzer. A flame ionization analyzer (FIA) capable of meeting or exceeding the specifications of this method. The flame ionization detector block shall be heated >120 °C (250 °F).

6.1.2 Sample Probe. Stainless steel, or equivalent, three-hole rake type. Sample holes shall be 4 mm (0.16-in.) in diameter or smaller and located at 16.7, 50, and 83.3 percent of the equivalent stack diameter. Alternatively, a single opening probe may be used so that a gas sample is collected from the centrally located 10 percent area of the stack cross-section.

6.1.3 Heated Sample Line. Stainless steel or Teflon'' tubing to transport the sample gas to the analyzer. The sample line should be heated (≥110 °C) to prevent any condensation.

6.1.4 Calibration Valve Assembly. A three-way valve assembly to direct the zero and calibration gases to the analyzers is recommended. Other methods, such as quick-connect lines, to route calibration gas to the analyzers are applicable.

6.1.5 Particulate Filter. An in-stack or an out-of-stack glass fiber filter is recommended if exhaust gas particulate loading

is significant. An out-of-stack filter should be heated to prevent any condensation.

6.1.6 Recorder. A strip-chart recorder, analog computer, or digital recorder for recording measurement data. The minimum data recording requirement is one measurement value per minute.

7.0 Reagents and Standards

7.1 Calibration Gases. The calibration gases for the gas analyzer shall be propane in air or propane in nitrogen. Alternatively, organic compounds other than propane can be used; the appropriate corrections for response factor must be made. Calibration gases shall be prepared in accordance with the procedure listed in Citation 2 of Section 16. Additionally, the manufacturer of the cylinder should provide a recommended shelf life for each calibration gas cylinder over which the concentration does not change more than ±2 percent from the certified value. For calibration gas values not generally available (*i.e.*, organics between 1 and 10 percent by volume), alternative methods for preparing calibration gas mixtures, such as dilution systems (Test Method 205, 40 CFR Part 51, Appendix M), may be used with prior approval of the Administrator.

7.1.1 Fuel. A 40 percent H_2/60 percent N_2 gas mixture is recommended to avoid an oxygen synergism effect that reportedly occurs when oxygen concentration varies significantly from a mean value.

7.1.2 Zero Gas. High purity air with less than 0.1 part per million by volume (ppmv) of organic material (propane or carbon equivalent) or less than 0.1 percent of the span value, whichever is greater.

7.1.3 Low-level Calibration Gas. An organic calibration gas with a concentration equivalent to 25 to 35 percent of the applicable span value.

7.1.4 Mid-level Calibration Gas. An organic calibration gas with a concentration equivalent to 45 to 55 percent of the applicable span value.

7.1.5 High-level Calibration Gas. An organic calibration gas with a concentration equivalent to 80 to 90 percent of the applicable span value.

8.0 Sample Collection, Preservation, Storage, and Transport

8.1 Selection of Sampling Site. The location of the sampling site is generally specified by the applicable regulation or purpose of the test (*i.e.*, exhaust stack, inlet line, etc.). The sample port shall be located to meet the testing requirements of Method 1.

8.2 Location of Sample Probe. Install the sample probe so that the probe is centrally located in the stack, pipe, or duct and is sealed tightly at the stack port connection.

8.3 Measurement System Preparation. Prior to the emission test, assemble the measurement system by following the manufacturer's written instructions for preparing sample interface and the organic analyzer. Make the system operable (Section 10.1).

8.4 Calibration Error Test. Immediately prior to the test series (within 2 hours of the start of the test), introduce zero gas and high-level calibration gas at the calibration valve assembly. Adjust the analyzer output to the appropriate levels, if necessary. Calculate the predicted response for the low-level and mid-level gases based on a linear response line between the zero and high-level response. Then introduce low-level and mid-level calibration gases successively to the measurement system. Record the analyzer responses for low-level and mid-level calibration gases and determine the differences between the measurement system responses and the predicted responses. These differences must be less than 5 percent of the respective calibration gas value. If not, the measurement system is not acceptable and must be replaced or repaired prior to testing. No adjustments to the measurement system shall be conducted after the calibration and before the drift check (Section 8.6.2). If adjustments are necessary before the completion of the test series, perform the drift checks prior to the required adjustments and repeat the calibration following the adjustments. If multiple electronic ranges are to be used, each additional range must be checked with a mid-level calibration gas to verify the multiplication factor.

8.5 Response Time Test. Introduce zero gas into the measurement system at the calibration valve assembly. When the system output has stabilized, switch quickly to the high-level calibration gas. Record the time from the concentration change to the measurement system response equivalent to 95 percent of the step change. Repeat the test three times and average the results.

8.6 Emission Measurement Test Procedure.

8.6.1 Organic Measurement. Begin sampling at the start of the test period, recording time and any required process information as appropriate. In particulate, note on the recording chart, periods of process interruption or cyclic operation.

8.6.2 Drift Determination. Immediately following the completion of the test period and hourly during the test period, reintroduce the zero and mid-level calibration gases, one at a time, to the measurement system at the calibration valve assembly. (Make no adjustments to the measurement system until both the zero and calibration drift checks are made.) Record the analyzer response. If the drift values exceed the specified limits, invalidate the test results preceding the check and repeat the test following corrections to the measurement system. Alternatively, recalibrate the test measurement system as in Section 8.4 and

report the results using both sets of calibration data (i.e., data determined prior to the test period and data determined following the test period).

NOTE: Note on the recording chart periods of process interruption or cyclic operation.

9.0 Quality Control

Method section	Quality control measure	Effect
8.4	Zero and calibration drift tests	Ensures that bias introduced by drift in the measurement system output during the run is no greater than 3 percent of span.

10.0 Calibration and Standardization

10.1 FIA equipment can be calibrated for almost any range of total organic concentrations. For high concentrations of organics (> 1.0 percent by volume as propane), modifications to most commonly available analyzers are necessary. One accepted method of equipment modification is to decrease the size of the sample to the analyzer through the use of a smaller diameter sample capillary. Direct and continuous measurement of organic concentration is a necessary consideration when determining any modification design.

11.0 Analytical Procedure

The sample collection and analysis are concurrent for this method (see Section 8.0).

12.0 Calculations and Data Analysis

12.1 Determine the average organic concentration in terms of ppmv as propane or other calibration gas. The average shall be determined by integration of the output recording over the period specified in the applicable regulation. If results are required in terms of ppmv as carbon, adjust measured concentrations using Equation 25A–1.

$$C_c = K C_{meas} \qquad \text{Eq. 25A-1}$$

Where:

C_c=Organic concentration as carbon, ppmv.
C_{meas}=Organic concentration as measured, ppmv.
K=Carbon equivalent correction factor.
=2 for ethane.
=3 for propane.
=4 for butane.
=Appropriate response factor for other organic calibration gases.

13.0 Method Performance

13.1 Measurement System Performance Specifications.

13.1.1 Zero Drift. Less than ±3 percent of the span value.

13.1.2 Calibration Drift. Less than ±3 percent of span value.

13.1.3 Calibration Error. Less than ±5 percent of the calibration gas value.

14.0 Pollution Prevention [Reserved]

15.0 Waste Management [Reserved]

16.0 References

1. Measurement of Volatile Organic Compounds—Guideline Series. U.S. Environmental Protection Agency. Research Triangle Park, NC. Publication No. EPA–450/2–78–041. June 1978. p. 46–54.

2. EPA Traceability Protocol for Assay and Certification of Gaseous Calibration Standards. U.S. Environmental Protection Agency, Quality Assurance and Technical Support Division. Research Triangle Park, N.C. September 1993.

3. Gasoline Vapor Emission Laboratory Evaluation—Part 2. U.S. Environmental Protection Agency, Office of Air Quality Planning and Standards. Research Triangle Park, NC. EMB Report No. 75–GAS–6. August 1975.

17.0 Tables, Diagrams, Flowcharts, and Validation Data

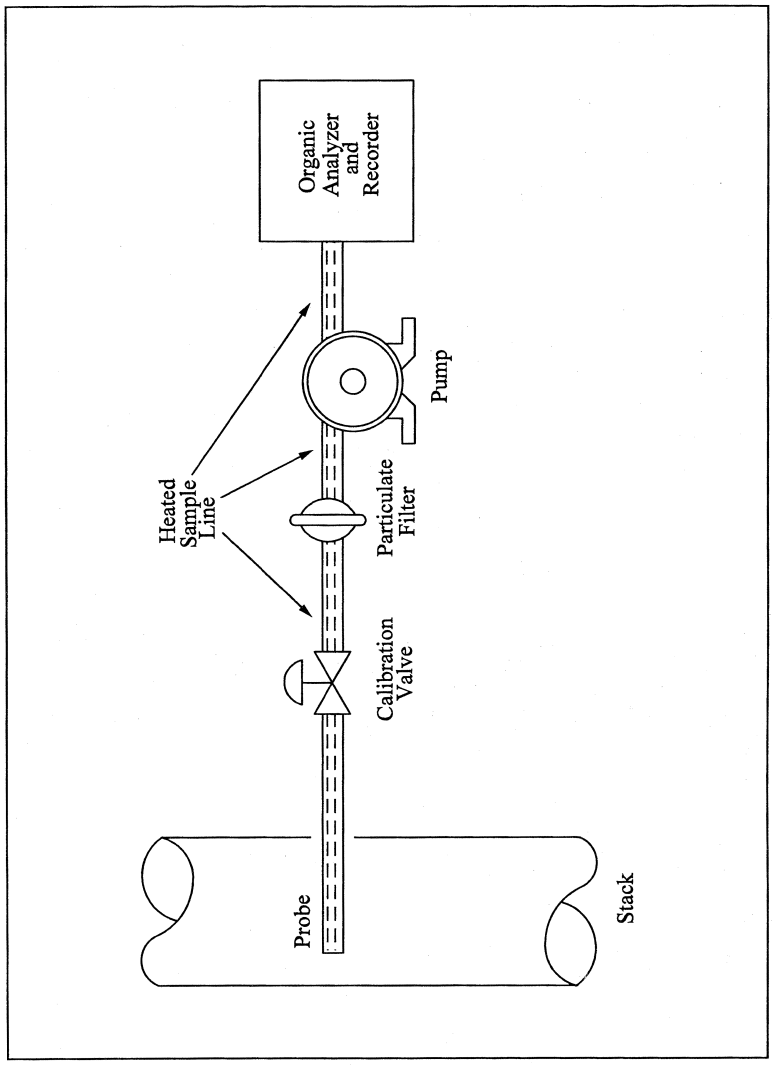

Figure 25A-1. Organic Concentration Measurement System.

METHOD 25B—DETERMINATION OF TOTAL GASEOUS ORGANIC CONCENTRATION USING A NONDISPERSIVE INFRARED ANALYZER

NOTE: This method does not include all of the specifications (*e.g.*, equipment and supplies) and procedures (*e.g.*, sampling) essential to its performance. Some material is incorporated by reference from other methods in this part. Therefore, to obtain reliable results, persons using this method should have a thorough knowledge of at least the following additional test methods: Method 1, Method 6C, and Method 25A.

1.0 Scope and Application

1.1 Analytes.

Analyte	CAS No.	Sensitivity
Total Organic Compounds	N/A	< 2% of span.

1.2 Applicability. This method is applicable for the determination of total gaseous organic concentration of vapors consisting primarily of alkanes. Other organic materials may be measured using the general procedure in this method, the appropriate calibration gas, and an analyzer set to the appropriate absorption band.

1.3 Data Quality Objectives. Adherence to the requirements of this method will enhance the quality of the data obtained from air pollutant sampling methods.

2.0 Summary of Method

A gas sample is extracted from the source through a heated sample line, if necessary, and glass fiber filter to a nondispersive infrared analyzer (NDIR). Results are reported as volume concentration equivalents of the calibration gas or as carbon equivalents.

3.0 Definitions

Same as Method 25A, Section 3.0.

4.0 Interferences [Reserved]

5.0 Safety

5.1 Disclaimer. This method may involve hazardous materials, operations, and equipment. This test method may not address all of the safety problems associated with its use. It is the responsibility of the user of this test method to establish appropriate safety and health practices and determine the applicability of regulatory limitations prior to performing this test method. The analyzer users manual should be consulted for specific precautions to be taken with regard to the analytical procedure.

5.2 Explosive Atmosphere. This method is often applied in highly explosive areas. Caution and care should be exercised in choice of equipment and installation.

6.0 Equipment and Supplies

Same as Method 25A, Section 6.0, with the exception of the following:

6.1 Organic Concentration Analyzer. A nondispersive infrared analyzer designed to measure alkane organics and capable of meeting or exceeding the specifications in this method.

7.0 Reagents and Standards

Same as Method 25A, Section 7.1. No fuel gas is required for an NDIR.

8.0 Sample Collection, Preservation, Storage, and Transport

Same as Method 25A, Section 8.0.

9.0 Quality Control

Same as Method 25A, Section 9.0.

10.0 Calibration and Standardization

Same as Method 25A, Section 10.0.

11.0 Analytical Procedure

The sample collection and analysis are concurrent for this method (see Section 8.0).

12.0 Calculations and Data Analysis

Same as Method 25A, Section 12.0.

13.0 Method Performance [Reserved]

14.0 Pollution Prevention [Reserved]

15.0 Waste Management [Reserved]

16.0 References

Same as Method 25A, Section 16.0.

17.0 Tables, Diagrams, Flowcharts, and Validation Data [Reserved]

METHOD 25C—DETERMINATION OF NONMETHANE ORGANIC COMPOUNDS (NMOC) IN LANDFILL GASES

NOTE: This method does not include all of the specifications (*e.g.*, equipment and supplies) and procedures (*e.g.*, sampling and analytical) essential to its performance. Some material is incorporated by reference from other methods in this part. Therefore, to obtain reliable results, persons using this method should also have a thorough knowledge of EPA Method 25.

1.0 Scope and Application

1.1 Analytes.

Analyte	CAS No.
Nonmethane organic compounds (NMOC).	No CAS number assigned.

1.2 Applicability. This method is applicable to the sampling and measurement of NMOC as carbon in landfill gases (LFG).

1.3 Data Quality Objectives. Adherence to the requirements of this method will enhance the quality of the data obtained from air pollutant sampling methods.

2.0 Summary of Method

2.1 A sample probe that has been perforated at one end is driven or augured to a depth of 0.9 m (3 ft) below the bottom of the landfill cover. A sample of the landfill gas is extracted with an evacuated cylinder. The NMOC content of the gas is determined by

injecting a portion of the gas into a gas chromatographic column to separate the NMOC from carbon monoxide (CO), carbon dioxide (CO_2), and methane (CH_4); the NMOC are oxidized to CO_2, reduced to CH_4, and measured by a flame ionization detector (FID). In this manner, the variable response of the FID associated with different types of organics is eliminated.

3.0 Definitions [Reserved]

4.0 Interferences [Reserved]

5.0 Safety

5.1 Since this method is complex, only experienced personnel should perform this test. LFG contains methane, therefore explosive mixtures may exist on or near the landfill. It is advisable to take appropriate safety precautions when testing landfills, such as refraining from smoking and installing explosion-proof equipment.

6.0 Equipment and Supplies

6.1 Sample Probe. Stainless steel, with the bottom third perforated. The sample probe must be capped at the bottom and must have a threaded cap with a sampling attachment at the top. The sample probe must be long enough to go through and extend no less than 0.9 m (3 ft) below the landfill cover. If the sample probe is to be driven into the landfill, the bottom cap should be designed to facilitate driving the probe into the landfill.

6.2 Sampling Train.

6.2.1 Rotameter with Flow Control Valve. Capable of measuring a sample flow rate of 100 ±10 ml/min. The control valve must be made of stainless steel.

6.2.2 Sampling Valve. Stainless steel.

6.2.3 Pressure Gauge. U-tube mercury manometer, or equivalent, capable of measuring pressure to within 1 mm Hg (0.5 in H_2O) in the range of 0 to 1,100 mm Hg (0 to 590 in H_2O).

6.2.4 Sample Tank. Stainless steel or aluminum cylinder, equipped with a stainless steel sample tank valve.

6.3 Vacuum Pump. Capable of evacuating to an absolute pressure of 10 mm Hg (5.4 in H_2O).

6.4 Purging Pump. Portable, explosion proof, and suitable for sampling NMOC.

6.5 Pilot Probe Procedure. The following are needed only if the tester chooses to use the procedure described in Section 8.2.1.

6.5.1 Pilot Probe. Tubing of sufficient strength to withstand being driven into the landfill by a post driver and an outside diameter of at least 6 mm (0.25 in.) smaller than the sample probe. The pilot probe shall be capped on both ends and long enough to go through the landfill cover and extend no less than 0.9 m (3 ft) into the landfill.

6.5.2 Post Driver and Compressor. Capable of driving the pilot probe and the sampling probe into the landfill. The Kitty Hawk portable post driver has been found to be acceptable.

6.6 Auger Procedure. The following are needed only if the tester chooses to use the procedure described in Section 8.2.2.

6.6.1 Auger. Capable of drilling through the landfill cover and to a depth of no less than 0.9 m (3 ft) into the landfill.

6.6.2 Pea Gravel.

6.6.3 Bentonite.

6.7 NMOC Analyzer, Barometer, Thermometer, and Syringes. Same as in Sections 6.3.1, 6.3.2, 6.33, and 6.2.10, respectively, of Method 25.

7.0 Reagents and Standards

7.1 NMOC Analysis. Same as in Method 25, Section 7.2.

7.2 Calibration. Same as in Method 25, Section 7.4, except omit Section 7.4.3.

7.3 Quality Assurance Audit Samples.

7.3.1 It is recommended, but not required, that a performance audit sample be analyzed in conjunction with the field samples. The audit sample should be in a suitable sample matrix at a concentration similar to the actual field samples.

7.3.2 When making compliance determinations, and upon availability, audit samples may be obtained from the appropriate EPA Regional Office or from the responsible enforcement authority and analyzed in conjunction with the field samples.

NOTE: The responsible enforcement authority should be notified at least 30 days prior to the test date to allow sufficient time for sample delivery.

8.0 Sample Collection, Preservation, Storage, and Transport

8.1 Sample Tank Evacuation and Leak-Check. Conduct the sample tank evacuation and leak-check either in the laboratory or the field. Connect the pressure gauge and sampling valve to the sample tank. Evacuate the sample tank to 10 mm Hg (5.4 in H_2O) absolute pressure or less. Close the sampling valve, and allow the tank to sit for 30 minutes. The tank is acceptable if no change more than ±2 mm is noted. Include the results of the leak-check in the test report.

8.2 Sample Probe Installation. The tester may use the procedure in Section 8.2.1 or 8.2.2.

8.2.1 Pilot Probe Procedure. Use the post driver to drive the pilot probe at least 0.9 m (3 ft) below the landfill cover. Alternative procedures to drive the probe into the landfill may be used subject to the approval of the Administrator's designated representative.

8.2.1.1 Remove the pilot probe and drive the sample probe into the hole left by the

pilot probe. The sample probe shall extend at least 0.9 m (3 ft) below the landfill cover and shall protrude about 0.3 m (1 ft) above the landfill cover. Seal around the sampling probe with bentonite and cap the sampling probe with the sampling probe cap.

8.2.2 Auger Procedure. Use an auger to drill a hole to at least 0.9 m (3 ft) below the landfill cover. Place the sample probe in the hole and backfill with pea gravel to a level 0.6 m (2 ft) from the surface. The sample probe shall protrude at least 0.3 m (1 ft) above the landfill cover. Seal the remaining area around the probe with bentonite. Allow 24 hours for the landfill gases to equilibrate inside the augured probe before sampling.

8.3 Sample Train Assembly. Just before assembling the sample train, measure the sample tank vacuum using the pressure gauge. Record the vacuum, the ambient temperature, and the barometric pressure at this time. Assemble the sampling probe purging system as shown in Figure 25C–1.

8.4 Sampling Procedure. Open the sampling valve and use the purge pump and the flow control valve to evacuate at least two sample probe volumes from the system at a flow rate of 500 ml/min or less. Close the sampling valve and replace the purge pump with the sample tank apparatus as shown in Figure 25C–2. Open the sampling valve and the sample tank valve and, using the flow control valve, sample at a flow rate of 500 ml/min or less until either a constant flow rate can no longer be maintained because of reduced sample tank vacuum or the appropriate composite volume is attained. Disconnect the sampling tank apparatus and pressurize the sample cylinder to approximately 1,060 mm Hg (567 in. H_2O) absolute pressure with helium, and record the final pressure. Alternatively, the sample tank may be pressurized in the lab.

8.4.1 The following restrictions apply to compositing samples from different probe sites into a single cylinder: (1) Individual composite samples per cylinder must be of equal volume; this must be verified by recording the flow rate, sampling time, vacuum readings, or other appropriate volume measuring data, (2) individual composite samples must have a minimum volume of 1 liter unless data is provided showing smaller volumes can be accurately measured, and (3) composite samples must not be collected using the final cylinder vacuum as it diminishes to ambient pressure.

8.4.2 Use Method 3C to determine the percent N_2 in each cylinder. The presence of N_2 indicates either infiltration of ambient air into the landfill gas sample or an inappropriate testing site has been chosen where anaerobic decomposition has not begun. The landfill gas sample is acceptable if the concentration of N_2 is less than 20 percent. Alternatively, Method 3C may be used to determine the oxygen content of each cylinder as an air infiltration test. With this option, the oxygen content of each cylinder must be less than 5 percent.

9.0 Quality Control

9.1 Miscellaneous Quality Control Measures.

Section	Quality control measure	Effect
8.4.1	Verify that landfill gas sample contains less than 20 percent N_2 or 5 percent O_2.	Ensures that ambient air was not drawn into the landfill gas sample.
10.1, 10.2	NMOC analyzer initial and daily performance checks.	Ensures precision of analytical results.
11.1.4	Audit Sample Analyses	Evaluate analytical technique and instrument calibration.

10.0 Calibration and Standardization

NOTE: Maintain a record of performance of each item.

10.1 Initial NMOC Analyzer Performance Test. Same as in Method 25, Section 10.1, except omit the linearity checks for CO_2 standards.

10.2 NMOC Analyzer Daily Calibration.

10.2.1 NMOC Response Factors. Same as in Method 25, Section 10.2.2.

10.3 Sample Tank Volume. The volume of the gas sampling tanks must be determined. Determine the tank volumes by weighing them empty and then filled with deionized water; weigh to the nearest 5 g, and record the results. Alternatively, measure the volume of water used to fill them to the nearest 5 ml.

11.0 Analytical Procedures

11.1 The oxidation, reduction, and measurement of NMOC's is similar to Method 25. Before putting the NMOC analyzer into routine operation, conduct an initial performance test. Start the analyzer, and perform all the necessary functions in order to put the analyzer into proper working order. Conduct the performance test according to the procedures established in Section 10.1. Once the performance test has been successfully completed and the NMOC calibration response factor has been determined, proceed with sample analysis as follows:

11.1.1 Daily Operations and Calibration Checks. Before and immediately after the analysis of each set of samples or on a daily basis (whichever occurs first), conduct a calibration test according to the procedures established in Section 10.2. If the criteria of the daily calibration test cannot be met, repeat the NMOC analyzer performance test (Section 10.1) before proceeding.

11.1.2 Operating Conditions. Same as in Method 25, Section 11.2.1.

11.1.3 Analysis of Sample Tank. Purge the sample loop with sample, and then inject the sample. Under the specified operating conditions, the CO_2 in the sample will elute in approximately 100 seconds. As soon as the detector response returns to baseline following the CO_2 peak, switch the carrier gas flow to backflush, and raise the column oven temperature to 195 °C (383 °F) as rapidly as possible. A rate of 30 °C/min (54 °F/min) has been shown to be adequate. Record the value obtained for any measured NMOC. Return the column oven temperature to 85 °C (185 °F) in preparation for the next analysis. Analyze each sample in triplicate, and report the average as C_{tm}.

11.2 Audit Sample Analysis. When the method is used to analyze samples to demonstrate compliance with a source emission regulation, an audit sample, if available, must be analyzed.

11.2.1 Concurrently analyze the audit sample and the compliance samples in the same manner to evaluate the technique of the analyst and the standards preparation.

11.2.2 The same analyst, analytical reagents, and analytical system must be used for the compliance samples and the audit sample. If this condition is met, duplicate auditing of subsequent compliance analyses for the same enforcement agency within a 30-day period is waived. An audit sample set may not be used to validate different sets of compliance samples under the jurisdiction of separate enforcement agencies, unless prior arrangements have been made with both enforcement agencies.

11.3 Audit Sample Results.

11.3.1 Calculate the audit sample concentrations and submit results using the instructions provided with the audit samples.

11.3.2 Report the results of the audit samples and the compliance determination samples along with their identification numbers, and the analyst's name to the responsible enforcement authority. Include this information with reports of any subsequent compliance analyses for the same enforcement authority during the 30-day period.

11.3.3 The concentrations of the audit samples obtained by the analyst must agree within 20 percent of the actual concentration. If the 20-percent specification is not met, reanalyze the compliance and audit samples, and include initial and reanalysis values in the test report.

11.3.4 Failure to meet the 20-percent specification may require retests until the audit problems are resolved. However, if the audit results do not affect the compliance or noncompliance status of the affected facility, the Administrator may waive the reanalysis requirement, further audits, or retests and accept the results of the compliance test. While steps are being taken to resolve audit analysis problems, the Administrator may also choose to use the data to determine the compliance or noncompliance status of the affected facility.

12.0 Data Analysis and Calculations

NOTE: All equations are written using absolute pressure; absolute pressures are determined by adding the measured barometric pressure to the measured gauge or manometer pressure.

12.1 Nomenclature.

B_w=Moisture content in the sample, fraction.
C_{N2}=Measured N_2 concentration, fraction.
C_t=Calculated NMOC concentration, ppmv C equivalent.
C_{tm}=Measured NMOC concentration, ppmv C equivalent.
P_b=Barometric pressure, mm Hg.
P_t=Gas sample tank pressure after sampling, but before pressurizing, mm Hg absolute.
P_{tf}=Final gas sample tank pressure after pressurizing, mm Hg absolute.
P_{ti}=Gas sample tank pressure after evacuation, mm Hg absolute.
P_w=Vapor pressure of H_2O (from Table 25C–1), mm Hg.
r=Total number of analyzer injections of sample tank during analysis (where j=injection number, 1 * * * r).
T_t=Sample tank temperature at completion of sampling, °K.
T_{ti}=Sample tank temperature before sampling, °K.
T_{tf}=Sample tank temperature after pressurizing, °K.

12.2 Water Correction. Use Table 25C–1 (Section 17.0), the LFG temperature, and barometric pressure at the sampling site to calculate B_w.

$$B_w = \frac{P_w}{P_b} \qquad \text{Eq. 25C-1}$$

12.3 NMOC Concentration. Use the following equation to calculate the concentration of NMOC for each sample tank.

$$C_t = \frac{\frac{P_{tf}}{T_{tf}}}{\frac{P_t}{T_t} - \frac{P_{ti}}{T_{ti}}} \quad \frac{1}{\left(1 - \frac{99}{78} C_{N_2}\right) - B_w} \sum_{j=1}^{r} C_{tm^{(j)}} \qquad \text{Eq. 25C-2}$$

13.0 Method Performance [Reserved]

14.0 Pollution Prevention [Reserved]

15.0 Waste Management [Reserved]

16.0 References

1. Salo, Albert E., Samuel Witz, and Robert D. MacPhee. Determination of Solvent Vapor Concentrations by Total Combustion Analysis: A Comparison of Infrared with Flame Ionization Detectors. Paper No. 75–33.2. (Presented at the 68th Annual Meeting of the Air Pollution Control Association. Boston, Massachusetts. June 15–20, 1975.) 14 p.

2. Salo, Albert E., William L. Oaks, and Robert D. MacPhee. Measuring the Organic Carbon Content of Source Emissions for Air Pollution Control. Paper No. 74–190. (Presented at the 67th Annual Meeting of the Air Pollution Control Association. Denver, Colorado. June 9–13, 1974.) 25 p.

17.0 Tables, Diagrams, Flowcharts, and Validation Data

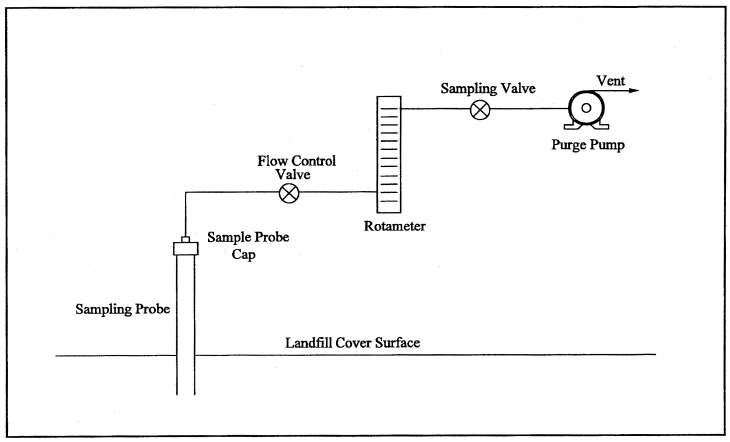

Figure 25C-1. Schematic of Sampling Probe Purging System

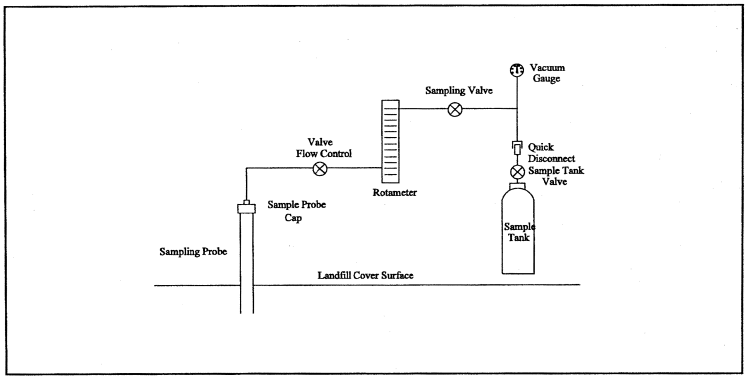

Figure 25C-2. Schematic of Sampling Train.

TABLE 25C–1—MOISTURE CORRECTION

Temperature, °C	Vapor Pressure of H_2O, mm Hg	Temperature, °C	Vapor Pressure of H_2O, mm Hg
4	6.1	18	15.5
6	7.0	20	17.5
8	8.0	22	19.8
10	9.2	24	22.4
12	10.5	26	25.2
14	12.0	28	28.3

TABLE 25C–1—MOISTURE CORRECTION—Continued

Temperature, °C	Vapor Pressure of H_2O, mm Hg	Temperature, °C	Vapor Pressure of H_2O, mm Hg
16	13.6	30	31.8

METHOD 25D—DETERMINATION OF THE VOLATILE ORGANIC CONCENTRATION OF WASTE SAMPLES

NOTE: Performance of this method should not be attempted by persons unfamiliar with the operation of a flame ionization detector (FID) or an electrolytic conductivity detector (ELCD) because knowledge beyond the scope of this presentation is required.

1.0 Scope and Application

1.1 Analyte. Volatile Organic Compounds. No CAS No. assigned.

1.2 Applicability. This method is applicable for determining the volatile organic (VO) concentration of a waste sample.

2.0 Summary of Method

2.1 Principle. A sample of waste is obtained at a point which is most representative of the unexposed waste (where the waste has had minimum opportunity to volatilize to the atmosphere). The sample is suspended in an organic/aqueous matrix, then heated and purged with nitrogen for 30 min. in order to separate certain organic compounds. Part of the sample is analyzed for carbon concentration, as methane, with an FID, and part of the sample is analyzed for chlorine concentration, as chloride, with an ELCD. The VO concentration is the sum of the carbon and chlorine content of the sample.

3.0 Definitions

3.1 *Well-mixed* in the context of this method refers to turbulent flow which results in multiple-phase waste in effect behaving as single-phase waste due to good mixing.

4.0 Interferences [Reserved]

5.0 Safety

5.1 Disclaimer. This method may involve hazardous materials, operations, and equipment. This test method may not address all of the safety problems associated with its use. It is the responsibility of the user of this test method to establish appropriate safety and health practices and to determine the applicability of regulatory limitations prior to performing this test method.

6.0 Equipment and Supplies

NOTE: Mention of trade names or specific products does not constitute endorsement by the Environmental Protection Agency.

6.1 Sampling. The following equipment is required:

6.1.1 Sampling Tube. Flexible Teflon, 0.25 in. ID (6.35 mm).

6.1.2 Sample Container. Borosilicate glass, 40-mL, and a Teflon-lined screw cap capable of forming an air tight seal.

6.1.3 Cooling Coil. Fabricated from 0.25 in (6.35 mm). ID 304 stainless steel tubing with a thermocouple at the coil outlet.

6.2 Analysis. The following equipment is required.

6.2.1 Purging Apparatus. For separating the VO from the waste sample. A schematic of the system is shown in Figure 25D–1. The purging apparatus consists of the following major components.

6.2.1.1 Purging Flask. A glass container to hold the sample while it is heated and purged with dry nitrogen. The cap of the purging flask is equipped with three fittings: one for a purging lance (fitting with the #7 Ace-thread), one for the Teflon exit tubing (side fitting, also a #7 Ace-thread), and a third (a 50-mm Ace-thread) to attach the base of the purging flask as shown in Figure 25D–2. The base of the purging flask is a 50-mm ID (2 in) cylindrical glass tube. One end of the tube is open while the other end is sealed. Exact dimensions are shown in Figure 25D–2.

6.2.1.2 Purging Lance. Glass tube, 6-mm OD (0.2 in) by 30 cm (12 in) long. The purging end of the tube is fitted with a four-arm bubbler with each tip drawn to an opening 1 mm (0.04 in) in diameter. Details and exact dimensions are shown in Figure 25D–2.

6.2.1.3 Coalescing Filter. Porous fritted disc incorporated into a container with the same dimensions as the purging flask. The details of the design are shown in Figure 25D–3.

6.2.1.4 Constant Temperature Chamber. A forced draft oven capable of maintaining a uniform temperature around the purging flask and coalescing filter of 75 ±2 °C (167 ±3.6 °F).

6.2.1.5 Three-way Valve. Manually operated, stainless steel. To introduce calibration gas into system.

6.2.1.6 Flow Controllers. Two, adjustable. One capable of maintaining a purge gas flow rate of 6 ±0.06 L/min (0.2 ±0.002 ft^3/min) The other capable of maintaining a calibration gas flow rate of 1–100 mL/min (0.00004–0.004 ft^3/min).

6.2.1.7 Rotameter. For monitoring the air flow through the purging system (0–10 L/min)(0–0.4 ft^3/min).

6.2.1.8 Sample Splitters. Two heated flow restrictors (placed inside oven or heated to 120 ±10 °C (248 ±18 °F)). At a purge rate of 6 L/min (0.2 ft^3/min), one will supply a constant flow to the first detector (the rest of the flow will be directed to the second sample splitter). The second splitter will split the analytical flow between the second detector and the flow restrictor. The approximate flow to the FID will be 40 mL/min (0.0014 ft^3/min) and to the ELCD will be 15 mL/min (0.0005 ft^3/min), but the exact flow must be adjusted to be compatible with the individual detector and to meet its linearity requirement. The two sample splitters will

be connected to each other by 1/8′ OD (3.175 mm) stainless steel tubing.

6.2.1.9 Flow Restrictor. Stainless steel tubing, 1/8′ OD (3.175 mm), connecting the second sample splitter to the ice bath. Length is determined by the resulting pressure in the purging flask (as measured by the pressure gauge). The resulting pressure from the use of the flow restrictor shall be 6–7 psig.

6.2.1.10 Filter Flask. With one-hole stopper. Used to hold ice bath. Excess purge gas is vented through the flask to prevent condensation in the flowmeter and to trap volatile organic compounds.

6.2.1.11 Four-way Valve. Manually operated, stainless steel. Placed inside oven, used to bypass purging flask.

6.2.1.12 On/Off Valves. Two, stainless steel. One heat resistant up to 130 °C (266 °F) and placed between oven and ELCD. The other a toggle valve used to control purge gas flow.

6.2.1.13 Pressure Gauge. Range 0–40 psi. To monitor pressure in purging flask and coalescing filter.

6.2.1.14 Sample Lines. Teflon, 1/4′ OD (6.35 mm), used inside the oven to carry purge gas to and from purging chamber and to and from coalescing filter to four-way valve. Also used to carry sample from four-way valve to first sample splitter.

6.2.1.15 Detector Tubing. Stainless steel, 1/8′ OD (3.175 mm), heated to 120 ±10 °C (248 ±18 °F) . Used to carry sample gas from each sample splitter to a detector. Each piece of tubing must be wrapped with heat tape and insulating tape in order to insure that no cold spots exist. The tubing leading to the ELCD will also contain a heat-resistant on-off valve (Section 6.2.1.12) which shall also be wrapped with heat-tape and insulation.

6.2.2 Volatile Organic Measurement System. Consisting of an FID to measure the carbon concentration of the sample and an ELCD to measure the chlorine concentration.

6.2.2.1 FID. A heated FID meeting the following specifications is required.

6.2.2.1.1 Linearity. A linear response (±5 percent) over the operating range as demonstrated by the procedures established in Section 10.1.1.

6.2.2.1.2 Range. A full scale range of 50 pg carbon/sec to 50 µg carbon/sec. Signal attenuators shall be available to produce a minimum signal response of 10 percent of full scale.

6.2.2.1.3 Data Recording System. A digital integration system compatible with the FID for permanently recording the output of the detector. The recorder shall have the capability to start and stop integration at points selected by the operator or it shall be capable of the ''integration by slices'' technique (this technique involves breaking down the chromatogram into smaller increments, integrating the area under the curve for each portion, subtracting the background for each portion, and then adding all of the areas together for the final area count).

6.2.2.2 ELCD. An ELCD meeting the following specifications is required. 1-propanol must be used as the electrolyte. The electrolyte flow through the conductivity cell shall be 1 to 2 mL/min (0.00004 to 0.00007 ft^3/min).

NOTE: A ¼-in. ID (6.35 mm) quartz reactor tube is strongly recommended to reduce carbon buildup and the resulting detector maintenance.

6.2.2.2.1 Linearity. A linear response (±10 percent) over the response range as demonstrated by the procedures in Section 10.1.2.

6.2.2.2.2 Range. A full scale range of 5.0 pg/sec to 500 ng/sec chloride. Signal attenuators shall be available to produce a minimum signal response of 10 percent of full scale.

6.2.2.2.3 Data Recording System. A digital integration system compatible with the output voltage range of the ELCD. The recorder must have the capability to start and stop integration at points selected by the operator or it shall be capable of performing the ''integration by slices'' technique.

7.0 Reagents and Standards

7.1 Sampling.

7.1.1 Polyethylene Glycol (PEG). Ninety-eight percent pure with an average molecular weight of 400. Before using the PEG, remove any organic compounds that might be detected as volatile organics by heating it to 120 °C (248 °F) and purging it with nitrogen at a flow rate of 1 to 2 L/min (0.04 to 0.07 ft^3/min) for 2 hours. The cleaned PEG must be stored under a 1 to 2 L/min (0.04 to 0.07 ft^3/min) nitrogen purge until use. The purge apparatus is shown in Figure 25D–4.

7.2 Analysis.

7.2.1 Sample Separation. The following are required for the sample purging step.

7.2.1.1 PEG. Same as Section 7.1.1.

7.2.1.2 Purge Gas. Zero grade nitrogen (N_2), containing less than 1 ppm carbon.

7.2.2 Volatile Organics Measurement. The following are required for measuring the VO concentration.

7.2.2.1 Hydrogen (H_2). Zero grade H_2, 99.999 percent pure.

7.2.2.2 Combustion Gas. Zero grade air or oxygen as required by the FID.

7.2.2.3 Calibration Gas. Pressurized gas cylinder containing 10 percent propane and 1 percent 1,1-dichloroethylene by volume in nitrogen.

7.2.2.4 Water. Deionized distilled water that conforms to American Society for Testing and Materials Specification D 1193–74, Type 3, is required for analysis. At the option of the analyst, the $KMnO_4$ test for oxidizable organic matter may be omitted when high concentrations are not expected to be present.

7.2.2.5 1-Propanol. ACS grade or better. Electrolyte Solution. For use in the ELCD.

7.3 Quality Assurance Audit Samples.

7.3.1 It is recommended, but not required, that a performance audit sample be analyzed in conjunction with the field samples. The audit sample should be in a suitable sample matrix at a concentration similar to the actual field samples.

7.3.2 When making compliance determinations, and upon availability, audit samples may be obtained from the appropriate EPA regional Office or from the responsible enforcement authority and analyzed in conjunction with the field samples.

NOTE: The responsible enforcement authority should be notified at least 30 days prior to the test date to allow sufficient time for sample delivery.

8.0 Sample Collection, Preservation, Storage, and Transport

8.1 Sampling.

8.1.1 Sampling Plan Design and Development. Use the procedures in chapter nine of Reference 1 in Section 16 as guidance in developing a sampling plan.

8.1.2 Single Phase or Well-mixed Waste.

8.1.2.1 Install a sampling tap to obtain the sample at a point which is most representative of the unexposed waste (where the waste has had minimum opportunity to volatilize to the atmosphere). Assemble the sampling apparatus as shown in Figure 25D–5.

8.1.2.2 Prepare the sampling containers as follows: Pour 30 mL of clean PEG into the container. PEG will reduce but not eliminate the loss of organics during sample collection. Weigh the sample container with the screw cap, the PEG, and any labels to the nearest 0.01 g and record the weight (m_{st}). Store the containers in an ice bath until 1 hour before sampling (PEG will solidify at ice bath temperatures; allow the containers to reach room temperature before sampling).

8.1.2.3 Begin sampling by purging the sample lines and cooling coil with at least four volumes of waste. Collect the purged material in a separate container and dispose of it properly.

8.1.2.4 After purging, stop the sample flow and direct the sampling tube to a preweighed sample container, prepared as described in Section 8.1.2.2. Keep the tip of the tube below the surface of the PEG during sampling to minimize contact with the atmosphere. Sample at a flow rate such that the temperature of the waste is less than 10 °C (50 °F). Fill the sample container and immediately cap it (within 5 seconds) so that a minimum headspace exists in the container. Store immediately in a cooler and cover with ice.

8.1.3 Multiple-phase Waste. Collect a 10 g sample of each phase of waste generated using the procedures described in Section 8.1.2 or 8.1.5. Each phase of the waste shall be analyzed as a separate sample. Calculate the weighted average VO concentration of the waste using Equation 25D–13 (Section 12.14).

8.1.4 Solid waste. Add approximately 10 g of the solid waste to a container prepared in the manner described in Section 8.1.2.2, minimizing headspace. Cap and chill immediately.

8.1.5 Alternative to Tap Installation. If tap installation is impractical or impossible, fill a large, clean, empty container by submerging the container into the waste below the surface of the waste. Immediately fill a container prepared in the manner described in Section 8.1.2.2 with approximately 10 g of the waste collected in the large container. Minimize headspace, cap and chill immediately.

8.1.6 Alternative sampling techniques may be used upon the approval of the Administrator.

8.2 Sample Recovery.

8.2.1 Assemble the purging apparatus as shown in Figures 25D–1 and 25D–2. The oven shall be heated to 75 ±2 °C (167 ±3.6 °F). The sampling lines leading from the oven to the detectors shall be heated to 120 ±10 °C (248 ±18 °F) with no cold spots. The flame ionization detector shall be operated with a heated block. Adjust the purging lance so that it reaches the bottom of the chamber.

8.2.2 Remove the sample container from the cooler, and wipe the exterior of the container to remove any extraneous ice, water, or other debris. Reweigh the sample container to the nearest 0.01 g, and record the weight (m_{sf}). Pour the contents of the sample container into the purging flask, rinse the sample container three times with a total of 20 mL of PEG (since the sample container originally held 30 mL of PEG, the total volume of PEG added to the purging flask will be 50 mL), transferring the rinsings to the purging flask after each rinse. Cap purging flask between rinses. The total volume of PEG in the purging flask shall be 50 mL. Add 50 mL of water to the purging flask.

9.0 Quality Control

9.1 Quality Control Samples. If audit samples are not available, prepare and analyze the two types of quality control samples (QCS) listed in Sections 9.4.1 and 9.4.2. Before placing the system in operation, after a shutdown of greater than six months, and after any major modifications, analyze each QCS in triplicate. For each detector, calculate the percent recovery by dividing measured concentration by theoretical concentration and multiplying by 100. Determine the mean percent recovery for each detector for each QCS triplicate analysis. The RSD for any triplicate analysis shall be ≤10 percent. For QCS 1 (methylene chloride), the percent recovery shall be ≥90 percent for carbon as methane, and ≥55 percent for chlorine

as chloride. For QCS 2 (1,3-dichloro-2-propanol), the percent recovery shall be ≤15 percent for carbon as methane, and ≤6 percent for chlorine as chloride. If the analytical system does not meet the above-mentioned criteria for both detectors, check the system parameters (temperature, system pressure, purge rate, etc.), correct the problem, and repeat the triplicate analysis of each QCS.

9.1.1 QCS 1, Methylene Chloride. Prepare a stock solution by weighing, to the nearest 0.1 mg, 55 μL of HPLC grade methylene chloride in a tared 5 mL volumetric flask. Record the weight in milligrams, dilute to 5 mL with cleaned PEG, and inject 100 μL of the stock solution into a sample prepared as a water blank (50 mL of cleaned PEG and 60 mL of water in the purging flask). Analyze the QCS according to the procedures described in Sections 10.2 and 10.3, excluding Section 10.2.2. To calculate the theoretical carbon concentration (in mg) in QCS 1, multiply mg of methylene chloride in the stock solution by 3.777×10^{-3}. To calculate the theoretical chlorine concentration (in mg) in QCS 1, multiply mg of methylene chloride in the stock solution by 1.670×10^{-2}.

9.1.2 QCS 2, 1,3-dichloro-2-propanol. Prepare a stock solution by weighing, to the nearest 0.1 mg, 60 μL of high purity grade 1,3-dichloro-2-propanol in a tared 5 mL volumetric flask. Record the weight in milligrams, dilute to 5 mL with cleaned PEG, and inject 100 μL of the stock solution into a sample prepared as a water blank (50 mL of cleaned PEG and 60 mL of water in the purging flask). Analyze the QCS according to the procedures described in Sections 10.2 and 10.3, excluding Section 10.2.2. To calculate the theoretical carbon concentration (in mg) in QCS 2, multiply mg of 1,3-dichloro-2-propanol in the stock solution by 7.461×10^{-3}. To calculate the theoretical chlorine concentration (in mg) in QCS 2, multiply mg of 1,3-dichloro-2-propanol in the stock solution by 1.099×10^{-2}.

9.1.3 Routine QCS Analysis. For each set of compliance samples (in this context, set is per facility, per compliance test), analyze one QCS 1 and one QCS 2 sample. The percent recovery for each sample for each detector shall be ±13 percent of the mean recovery established for the most recent set of QCS triplicate analysis (Section 9.4). If the sample does not meet this criteria, check the system components and analyze another QCS 1 and 2 until a single set of QCS meet the ±13 percent criteria.

10.0 Calibration and Standardization

10.1 Initial Performance Check of Purging System. Before placing the system in operation, after a shutdown of greater than six months, after any major modifications, and at least once per month during continuous operation, conduct the linearity checks described in Sections 10.1.1 and 10.1.2. Install calibration gas at the three-way calibration gas valve. See Figure 25D–1.

10.1.1 Linearity Check Procedure. Using the calibration standard described in Section 7.2.2.3 and by varying the injection time, it is possible to calibrate at multiple concentration levels. Use Equation 25D–3 to calculate three sets of calibration gas flow rates and run times needed to introduce a total mass of carbon, as methane, (m_c) of 1, 5, and 10 mg into the system (low, medium and high FID calibration, respectively). Use Equation 25D–4 to calculate three sets of calibration gas flow rates and run times needed to introduce a total chloride mass (m_{ch}) of 1, 5, and 10 mg into the system (low, medium and high ELCD calibration, respectively). With the system operating in standby mode, allow the FID and the ELCD to establish a stable baseline. Set the secondary pressure regulator of the calibration gas cylinder to the same pressure as the purge gas cylinder and set the proper flow rate with the calibration flow controller (see Figure 25D–1). The calibration gas flow rate can be measured with a flowmeter attached to the vent position of the calibration gas valve. Set the four-way bypass valve to standby position so that the calibration gas flows through the coalescing filter only. Inject the calibration gas by turning the calibration gas valve from vent position to inject position. Continue the calibration gas flow for the appropriate period of time before switching the calibration valve to vent position. Continue recording the response of the FID and the ELCD for 5 min after switching off calibration gas flow. Make triplicate injections of all six levels of calibration.

10.1.2 Linearity Criteria. Calculate the average response factor (Equations 25D–5 and 25D–6) and the relative standard deviation (RSD) (Equation 25D–10) at each level of the calibration curve for both detectors. Calculate the overall mean of the three response factor averages for each detector. The FID linearity is acceptable if each response factor is within 5 percent of the overall mean and if the RSD for each set of triplicate injections is less than 5 percent. The ELCD linearity is acceptable if each response factor is within 10 percent of the overall mean and if the RSD for each set of triplicate injections is less than 10 percent. Record the overall mean value of the response factors for the FID and the ELCD. If the calibration for either the FID or the ELCD does not meet the criteria, correct the detector/system problem and repeat Sections 10.1.1 and 10.1.2.

10.2 Daily Calibrations.

10.2.1 Daily Linearity Check. Follow the procedures outlined in Section 10.1.1 to analyze the medium level calibration for both the FID and the ELCD in duplicate at the start of the day. Calculate the response factors and the RSDs for each detector. For the

FID, the calibration is acceptable if the average response factor is within 5 percent of the overall mean response factor (Section 10.1.2) and if the RSD for the duplicate injection is less than 5 percent. For the ELCD, the calibration is acceptable if the average response factor is within 10 percent of the overall mean response factor (Section 10.1.2) and if the RSD for the duplicate injection is less than 10 percent. If the calibration for either the FID or the ELCD does not meet the criteria, correct the detector/system problem and repeat Sections 10.1.1 and 10.1.2.

10.2.2 Calibration Range Check.

10.2.2.1 If the waste concentration for either detector falls below the range of calibration for that detector, use the procedure outlined in Section 10.1.1 to choose two calibration points that bracket the new target concentration. Analyze each of these points in triplicate (as outlined in Section 10.1.1) and use the criteria in Section 10.1.2 to determine the linearity of the detector in this ''mini-calibration'' range.

10.2.2.2 After the initial linearity check of the mini-calibration curve, it is only necessary to test one of the points in duplicate for the daily calibration check (in addition to the points specified in Section 10.2.1). The average daily mini-calibration point should fit the linearity criteria specified in Section 10.2.1. If the calibration for either the FID or the ELCD does not meet the criteria, correct the detector/system problem and repeat the calibration procedure mentioned in the first paragraph of Section 10.2.2. A mini-calibration curve for waste concentrations above the calibration curve for either detector is optional.

10.3 Analytical Balance. Calibrate against standard weights.

11.0 Analysis

11.1 Sample Analysis.

11.1.1 Turn on the constant temperature chamber and allow the temperature to equilibrate at 75 ±2 °C (167 ±3.6 °F). Turn the four-way valve so that the purge gas bypasses the purging flask, the purge gas flowing through the coalescing filter and to the detectors (standby mode). Turn on the purge gas. Allow both the FID and the ELCD to warm up until a stable baseline is achieved on each detector. Pack the filter flask with ice. Replace ice after each run and dispose of the waste water properly. When the temperature of the oven reaches 75 ±2 °C (167 ±3.6 °F), start both integrators and record baseline. After 1 min, turn the four-way valve so that the purge gas flows through the purging flask, to the coalescing filter and to the sample splitters (purge mode). Continue recording the response of the FID and the ELCD. Monitor the readings of the pressure gauge and the rotameter. If the readings fall below established setpoints, stop the purging, determine the source of the leak, and resolve the problem before resuming. Leaks detected during a sampling period invalidate that sample.

11.1.2 As the purging continues, monitor the output of the detectors to make certain that the analysis is proceeding correctly and that the results are being properly recorded. Every 10 minutes read and record the purge flow rate, the pressure and the chamber temperature. Continue the purging for 30 minutes.

11.1.3 For each detector output, integrate over the entire area of the peak starting at 1 minute and continuing until the end of the run. Subtract the established baseline area from the peak area. Record the corrected area of the peak. See Figure 25D–6 for an example integration.

11.2 Water Blank. A water blank shall be analyzed for each batch of cleaned PEG prepared. Transfer about 60 mL of water into the purging flask. Add 50 mL of the cleaned PEG to the purging flask. Treat the blank as described in Sections 8.2 and 8.3, excluding Section 8.2.2. Calculate the concentration of carbon and chlorine in the blank sample (assume 10 g of waste as the mass). A VO concentration equivalent to ≤10 percent of the applicable standard may be subtracted from the measured VO concentration of the waste samples. Include all blank results and documentation in the test report.

11.3 Audit Sample Analysis.

11.3.1 When the method is used to analyze samples to demonstrate compliance with a source emission regulation, an audit sample, if available, must be analyzed.

11.3.2 Concurrently analyze the audit sample and the compliance samples in the same manner to evaluate the technique of the analyst and the standards preparation.

11.3.3 The same analyst, analytical reagents, and analytical system must be used for the compliance samples and the audit sample. If this condition is met, duplicate auditing of subsequent compliance analyses for the same enforcement agency within a 30-day period is waived. An audit sample may not be used to validate different sets of compliance samples under the jurisdiction of separate enforcement agencies, unless prior arrangements have been made with both enforcement agencies.

11.4 Audit Sample Results.

11.4.1 Calculate the audit sample concentrations and submit results using the instructions provided with the audit samples.

11.4.2 Report the results of the audit samples and the compliance determination samples along with their identification numbers, and the analyst's name to the responsible enforcement authority. Include this information with reports of any subsequent compliance analyses for the same enforcement authority during the 30-day period.

12.0 Data Analysis and Calculations

12.1 Nomenclature.

A_b=Area under the water blank response curve, counts.
A_c=Area under the calibration response curve, counts.
A_s=Area under the sample response curve, counts.
C=Concentration of volatile organics in the sample, ppmw.
C_c=Concentration of carbon, as methane, in the calibration gas, mg/L.
C_{ch}=Concentration of chloride in the calibration gas, mg/L.
C_j=VO concentration of phase j, ppmw.
DR_t=Average daily response factor of the FID, mg CH_4/counts.
Dr_{th}=Average daily response factor of the ELCD, mg Cl^-/counts.
F_j=Weight fraction of phase j present in the waste.
m_c=Mass of carbon, as methane, in a calibration run, mg.
m_{ch}=Mass of chloride in a calibration run, mg.
m_s=Mass of the waste sample, g.
m_{sc}=Mass of carbon, as methane, in the sample, mg.
m_{sf}=Mass of sample container and waste sample, g.
m_{sh}=Mass of chloride in the sample, mg.
m_{st}=Mass of sample container prior to sampling, g.
m_{VO}=Mass of volatile organics in the sample, mg.
n=Total number of phases present in the waste.
P_p=Percent propane in calibration gas (L/L).
P_{vc}=Percent 1,1-dichloroethylene in calibration gas (L/L).
Q_c=Flow rate of calibration gas, L/min.
t_c=Length of time standard gas is delivered to the analyzer, min.
W=Weighted average VO concentration, ppmw.

12.2 Concentration of Carbon, as Methane, in the Calibration Gas.

$$C_c = (19.681 \times P_p) + (13.121 \times P_{vc}) \qquad \text{Eq. 25D-1}$$

12.3 Concentration of Chloride in the Calibration Gas.

$$C_{ch} = 28.998 \times P_{vc} \qquad \text{Eq. 25D-2}$$

12.4 Mass of Carbon, as Methane, in a Calibration Run.

$$M_c = C_c \times Q_c \times t_c \qquad \text{Eq. 25D-3}$$

12.5 Mass of Chloride in a Calibration Run.

$$m_{ch} = C_{ch} \times Q_c \times t_c \qquad \text{Eq. 25D-4}$$

12.6 FID Response Factor, mg/counts.

$$DR_t = \frac{m_c}{A_c} \qquad \text{Eq. 25D-5}$$

12.7 ELCD Response Factor, mg/counts.

$$DR_{th} = \frac{m_{ch}}{A_c} \qquad \text{Eq. 25D-6}$$

12.8 Mass of Carbon in the Sample.

$$m_{sc} = DR_t (A_s - A_b) \qquad \text{Eq. 25D-7}$$

12.9 Mass of Chloride in the Sample.

$$m_{sh} = DR_{th} (A_s - A_b) \qquad \text{Eq. 25D-8}$$

12.10 Mass of Volatile Organics in the Sample.

$$m_{vo} = m_{sc} + m_{sh} \qquad \text{Eq. 25D-9}$$

12.11 Relative Standard Deviation.

$$RSD = \frac{100}{\bar{x}} \sqrt{\frac{\sum_{i=1}^{n} (x_i - \bar{x})^2}{n-1}} \qquad \text{Eq. 25D-10}$$

12.12 Mass of Sample.

$$m_s = m_{sf} - m_{st} \qquad \text{Eq. 25D-11}$$

12.13 Concentration of Volatile Organics in Waste.

$$C = \frac{(m_{vo} \times 1000)}{m_s} \qquad \text{Eq. 25D-12}$$

12.14 Weighted Average VO Concentration of Multi-phase Waste.

$$W = \sum_{j=1}^{n} F_j x \overline{C}_j \qquad \text{Eq. 25D-13}$$

13.0 Method Performance [Reserved]

14.0 Pollution Prevention [Reserved]

15.0 Waste Management [Reserved]

16.0 References

1. ''Test Methods for Evaluating Solid Waste, Physical/Chemistry Methods'', U.S. Environmental Protection Agency. Publication SW–846, 3rd Edition, November 1986 as amended by Update I, November 1990.

17.0 Tables, Diagrams, Flowcharts, and Validation Data

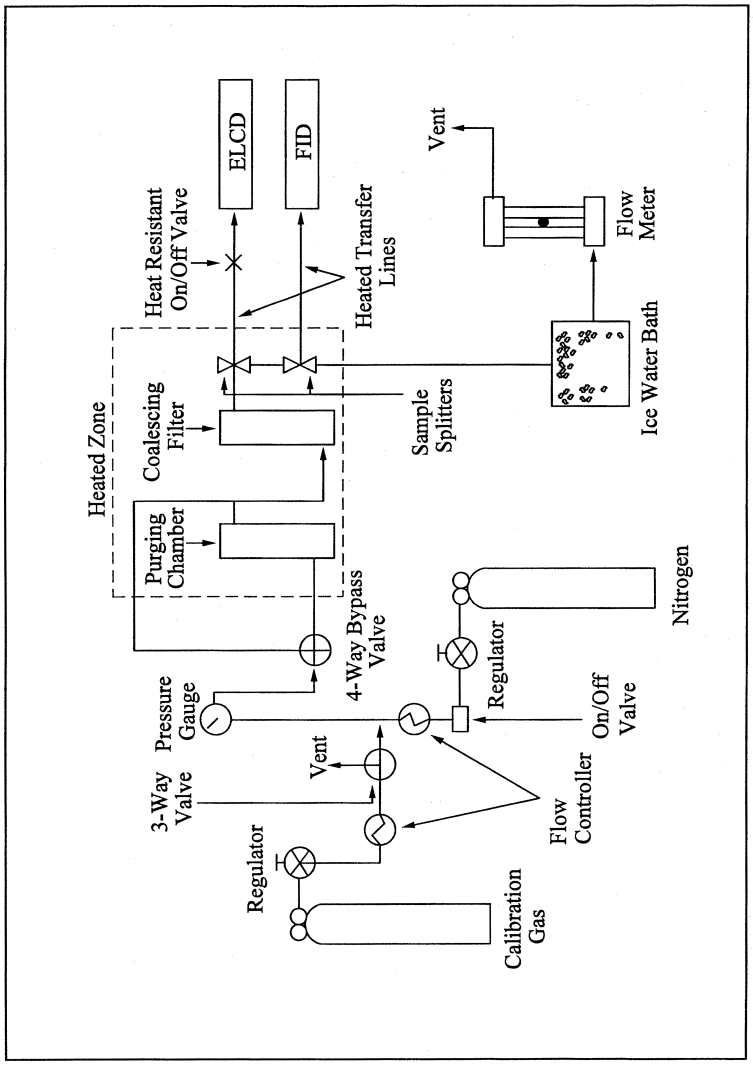

Figure 25D-1. Schematic of Purging Apparatus.

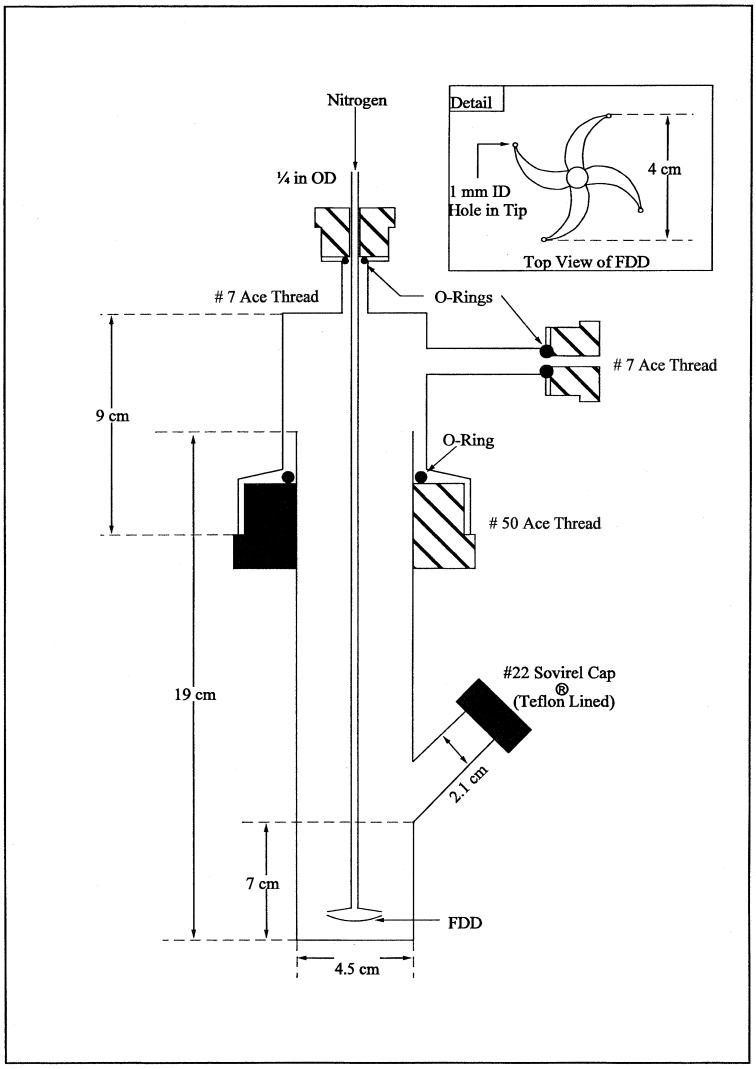

Figure 25D-2. Purging Lance.

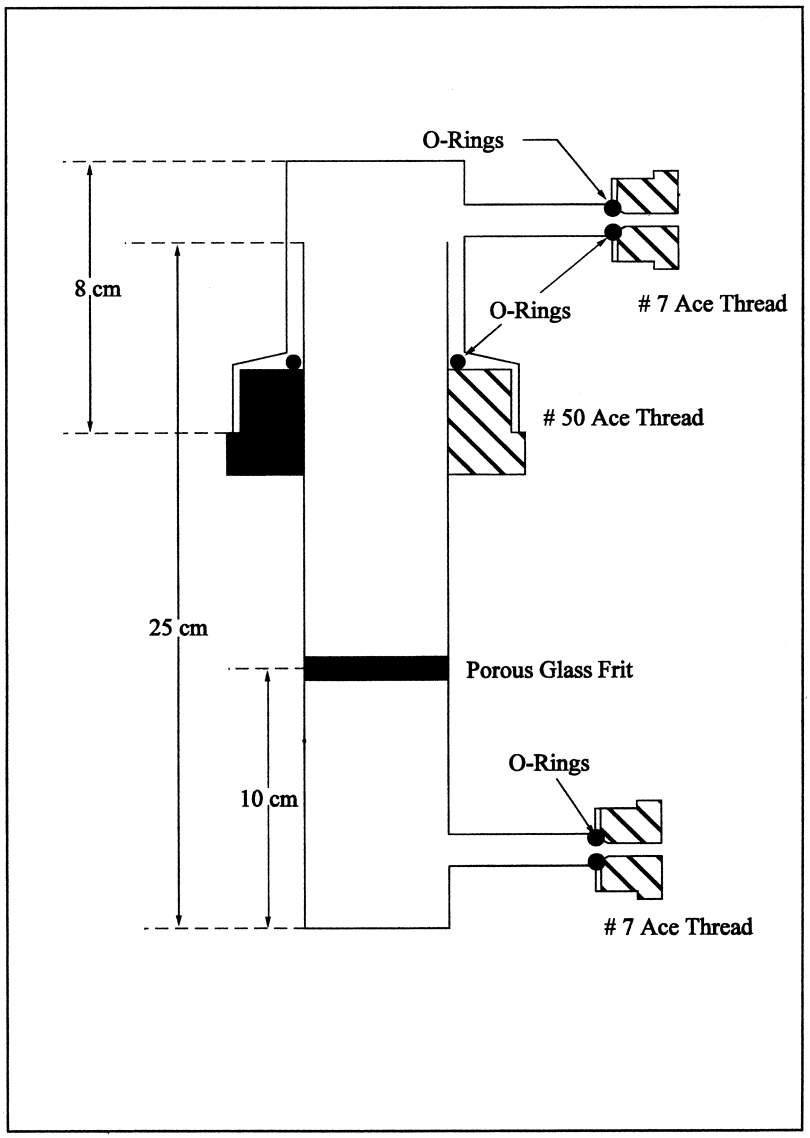
O-Rings
8 cm
O-Rings
7 Ace Thread
50 Ace Thread
25 cm
Porous Glass Frit
O-Rings
10 cm
7 Ace Thread

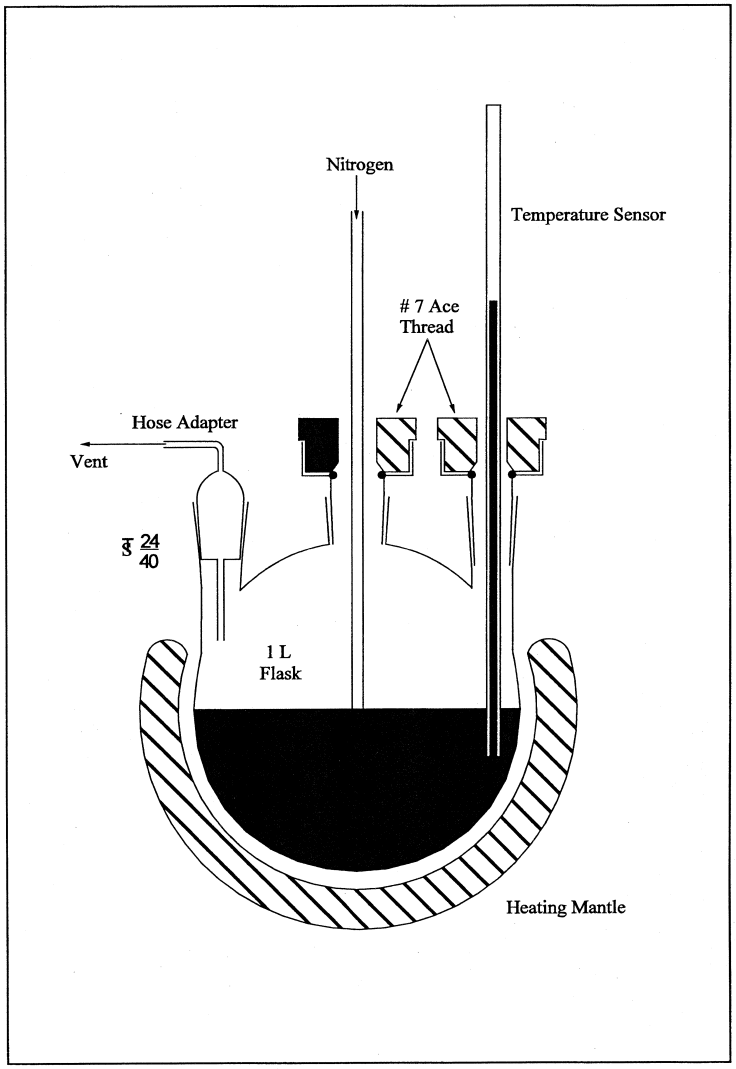

Figure 25D-4. Schematic of PEG Cleaning System.

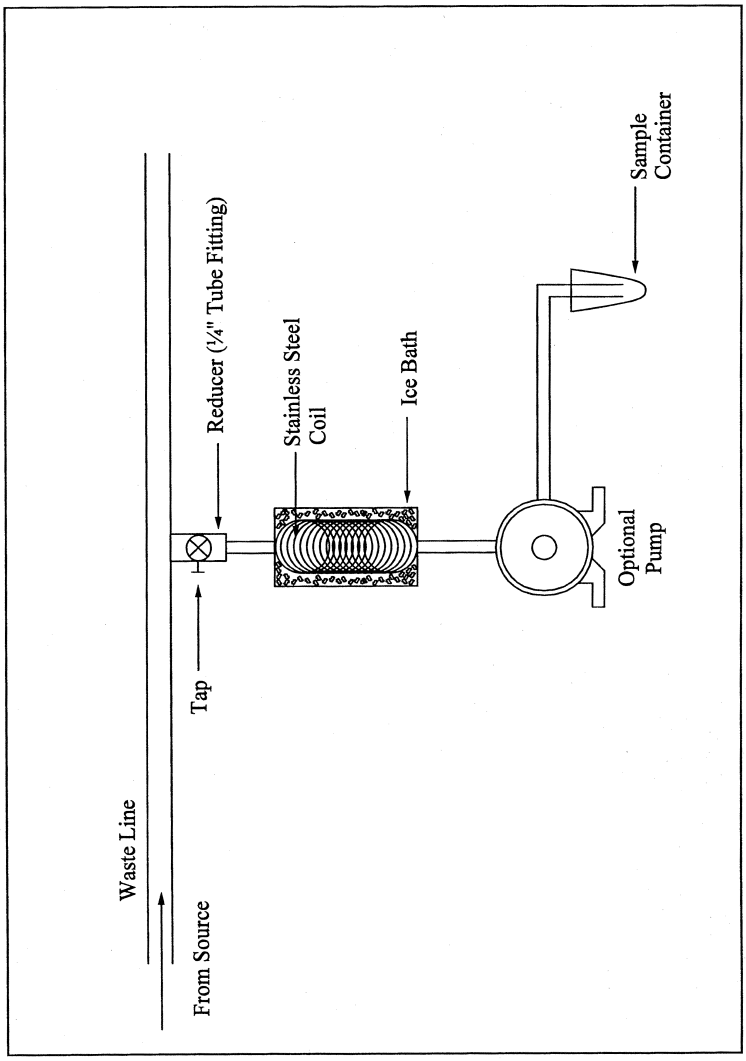

Figure 25D-5. Schematic of Sampling Apparatus.

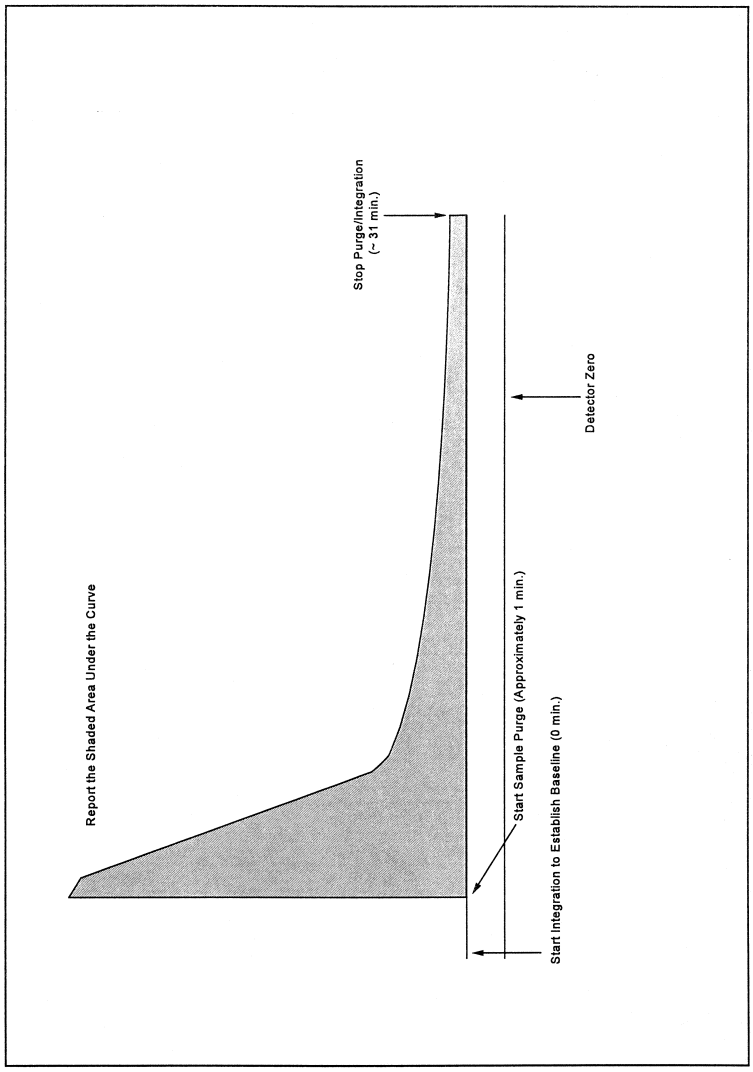

Figure 25D-6. Example Integration of Either Detector.

METHOD 25E—DETERMINATION OF VAPOR PHASE ORGANIC CONCENTRATION IN WASTE SAMPLES

NOTE: Performance of this method should not be attempted by persons unfamiliar with the operation of a flame ionization detector (FID) nor by those who are unfamiliar with source sampling because knowledge beyond the scope of this presentation is required. This method is not inclusive with respect to specifications (*e.g.*, reagents and standards) and calibration procedures. Some material is incorporated by reference from other methods. Therefore, to obtain reliable results, persons using this method should have a thorough knowledge of at least the following additional test methods: Method 106, part 61, Appendix B, and Method 18, part 60, Appendix A.

1.0 Scope and Application

1.1 Applicability. This method is applicable for determining the vapor pressure of waste cited by an applicable regulation.

1.2 Data Quality Objectives. Adherence to the requirements of this method will enhance the quality of the data obtained from air pollutant sampling methods.

2.0 Summary of Method

2.1 The headspace vapor of the sample is analyzed for carbon content by a headspace analyzer, which uses an FID.

3.0 Definitions [Reserved]

4.0 Interferences

4.1 The analyst shall select the operating parameters best suited to the requirements for a particular analysis. The analyst shall produce confirming data through an adequate supplemental analytical technique and have the data available for review by the Administrator.

5.0 Safety [Reserved]

6.0 Equipment and Supplies

6.1 Sampling. The following equipment is required:

6.1.1 Sample Containers. Vials, glass, with butyl rubber septa, Perkin-Elmer Corporation Numbers 0105–0129 (glass vials), B001–0728 (gray butyl rubber septum, plug style), 0105–0131 (butyl rubber septa), or equivalent. The seal must be made from butyl rubber. Silicone rubber seals are not acceptable.

6.1.2 Vial Sealer. Perkin-Elmer Number 105–0106, or equivalent.

6.1.3 Gas-Tight Syringe. Perkin-Elmer Number 00230117, or equivalent.

6.1.4 The following equipment is required for sampling.

6.1.4.1 Tap.

6.1.4.2 Tubing. Teflon, 0.25-in. ID.

NOTE: Mention of trade names or specific products does not constitute endorsement by the Environmental Protection Agency.

6.1.4.3 Cooling Coil. Stainless steel (304), 0.25 in.-ID, equipped with a thermocouple at the coil outlet.

6.2 Analysis. The following equipment is required.

6.2.1 Balanced Pressure Headspace Sampler. Perkin-Elmer HS–6, HS–100, or equivalent, equipped with a glass bead column instead of a chromatographic column.

6.2.2 FID. An FID meeting the following specifications is required.

6.2.2.1 Linearity. A linear response (±5 percent) over the operating range as demonstrated by the procedures established in Section 10.2.

6.2.2.2 Range. A full scale range of 1 to 10,000 parts per million (ppm) propane (C_3H_8). Signal attenuators shall be available to produce a minimum signal response of 10 percent of full scale.

6.2.3 Data Recording System. Analog strip chart recorder or digital integration system compatible with the FID for permanently recording the output of the detector.

6.2.4 Temperature Sensor. Capable of reading temperatures in the range of 30 to 60 °C (86 to 140 °F) with an accuracy of ±0.1 °C (±0.2 °F).

7.0 Reagents and Standards

7.1 Analysis. The following items are required for analysis.

7.1.1 Hydrogen (H_2). Zero grade hydrogen, as required by the FID.

7.1.2 Carrier Gas. Zero grade nitrogen, containing less than 1 ppm carbon (C) and less than 1 ppm carbon dioxide.

7.1.3 Combustion Gas. Zero grade air or oxygen as required by the FID.

7.2 Calibration and Linearity Check.

7.2.1 Stock Cylinder Gas Standard. 100 percent propane. The manufacturer shall: (a) Certify the gas composition to be accurate to ±3 percent or better (see Section 7.2.1.1); (b) recommend a maximum shelf life over which the gas concentration does not change by greater than ±5 percent from the certified value; and (c) affix the date of gas cylinder preparation, certified propane concentration, and recommended maximum shelf life to the cylinder before shipment to the buyer.

7.2.1.1 Cylinder Standards Certification. The manufacturer shall certify the concentration of the calibration gas in the cylinder by (a) directly analyzing the cylinder and (b) calibrating his analytical procedure on the day of cylinder analysis. To calibrate his analytical procedure, the manufacturer shall use, as a minimum, a three-point calibration curve.

7.2.1.2 Verification of Manufacturer's Calibration Standards. Before using, the manufacturer shall verify each calibration standard by (a) comparing it to gas mixtures prepared in accordance with the procedure described in Section 7.1 of Method 106 of Part 61, Appendix B, or by (b) calibrating it against Standard Reference Materials (SRM's) prepared by the National Bureau of Standards, if such SRM's are available. The agreement between the initially determined concentration value and the verification concentration value must be within ±5 percent. The manufacturer must reverify all calibration standards on a time interval consistent with the shelf life of the cylinder standards sold.

8.0 Sampling Collection, Preservation, Storage, and Transport

8.1 Install a sampling tap to obtain a sample at a point which is most representative of the unexposed waste (where the waste has had minimum opportunity to volatilize to

the atmosphere). Assemble the sampling apparatus as shown in Figure 25E–1.

8.2 Begin sampling by purging the sample lines and cooling coil with at least four volumes of waste. Collect the purged material in a separate container and dispose of it properly.

8.3 After purging, stop the sample flow and transfer the Teflon sampling tube to a sample container. Sample at a flow rate such that the temperature of the waste is <10 °C (<50 °F). Fill the sample container halfway (±5 percent) and cap it within 5 seconds. Store immediately in a cooler and cover with ice.

8.4 Alternative sampling techniques may be used upon the approval of the Administrator.

9.0 Quality Control

9.1 Miscellaneous Quality Control Measures.

Section	Quality control measure	Effect
10.2, 10.3	FID calibration and response check	Ensure precision of analytical results.

10.0 Calibration and Standardization

NOTE: Maintain a record of performance of each item.

10.1 Use the procedures in Sections 10.2 to calibrate the headspace analyzer and FID and check for linearity before the system is first placed in operation, after any shutdown longer than 6 months, and after any modification of the system.

10.2 Calibration and Linearity. Use the procedures in Section 10 of Method 18 of Part 60, Appendix A, to prepare the standards and calibrate the flowmeters, using propane as the standard gas. Fill the calibration standard vials halfway (±5 percent) with deionized water. Purge and fill the airspace with calibration standard. Prepare a minimum of three concentrations of calibration standards in triplicate at concentrations that will bracket the applicable cutoff. For a cutoff of 5.2 kPa (0.75 psi), prepare nominal concentrations of 30,000, 50,000, and 70,000 ppm as propane. For a cutoff of 27.6 kPa (4.0 psi), prepare nominal concentrations of 200,000, 300,000, and 400,000 ppm as propane.

10.2.1 Use the procedures in Section 11.3 to measure the FID response of each standard. Use a linear regression analysis to calculate the values for the slope (k) and the y-intercept (b). Use the procedures in Sections 12.3 and 12.2 to test the calibration and the linearity.

10.3 Daily FID Calibration Check. Check the calibration at the beginning and at the end of the daily runs by using the following procedures. Prepare 2 calibration standards at the nominal cutoff concentration using the procedures in Section 10.2. Place one at the beginning and one at the end of the daily run. Measure the FID response of the daily calibration standard and use the values for k and b from the most recent calibration to calculate the concentration of the daily standard. Use an equation similar to 25E–2 to calculate the percent difference between the daily standard and C_s. If the difference is within 5 percent, then the previous values for k and b can be used. Otherwise, use the procedures in Section 10.2 to recalibrate the FID.

11.0 Analytical Procedures

11.1 Allow one hour for the headspace vials to equilibrate at the temperature specified in the regulation. Allow the FID to warm up until a stable baseline is achieved on the detector.

11.2 Check the calibration of the FID daily using the procedures in Section 10.3.

11.3 Follow the manufacturer's recommended procedures for the normal operation of the headspace sampler and FID.

11.4 Use the procedures in Sections 12.4 and 12.5 to calculate the vapor phase organic vapor pressure in the samples.

11.5 Monitor the output of the detector to make certain that the results are being properly recorded.

12.0 Data Analysis and Calculations

12.1 Nomenclature.

A=Measurement of the area under the response curve, counts.

b=y-intercept of the linear regression line.

C_a=Measured vapor phase organic concentration of sample, ppm as propane.

C_{ma}=Average measured vapor phase organic concentration of standard, ppm as propane.

C_m=Measured vapor phase organic concentration of standard, ppm as propane.

C_s=Calculated standard concentration, ppm as propane.

k=Slope of the linear regression line.

P_{bar}=Atmospheric pressure at analysis conditions, mm Hg (in. Hg).

P*=Organic vapor pressure in the sample, kPa (psi).

PD=Percent difference between the average measured vapor phase organic concentration (C_m) and the calculated standard concentration (C_s).

RSD=Relative standard deviation.

$\beta = 1.333 \times 10^{-7}$ kPa/[(mm Hg)(ppm)], (4.91×10^{-7} psi/[(in. Hg)(ppm)])

12.2 Linearity. Use the following equation to calculate the measured standard concentration for each standard vial.

$$C_m = kA + b \qquad \text{Eq. 25E-1}$$

12.2.1 Calculate the average measured standard concentration (C_{ma}) for each set of triplicate standards and use the following equation to calculate PD between C_{ma} and C_s. The instrument linearity is acceptable if the PD is within five for each standard.

$$PD = \frac{C_s - C_{ma}}{C_s} \times 100 \qquad \text{Eq. 25E-2}$$

12.3. Relative Standard Deviation (RSD). Use the following equation to calculate the RSD for each triplicate set of standards.

$$RSD = \frac{100}{C_{ma}} \sqrt{\frac{\sum (C_m - C_{ma})^2}{2}} \qquad \text{Eq. 25E-3}$$

The calibration is acceptable if the RSD is within five for each standard concentration.

12.4 Concentration of organics in the headspace. Use the following equation to calculate the concentration of vapor phase organics in each sample.

$$C_a = kA + b \qquad \text{Eq. 25E-4}$$

12.5 Vapor Pressure of Organics in the Headspace Sample. Use the following equation to calculate the vapor pressure of organics in the sample.

$$P^* = \beta P_{bar} C_a \qquad \text{Eq. 25E-5}$$

13.0 Method Performance [Reserved]

14.0 Pollution Prevention [Reserved]

15.0 Waste Management [Reserved]

16.0 References

1. Salo, Albert E., Samuel Witz, and Robert D. MacPhee. ''Determination of Solvent Vapor Concentrations by Total Combustion Analysis: a Comparison of Infared with Flame Ionization Detectors. Paper No. 75–33.2. (Presented at the 68th Annual Meeting of the Air Pollution Control Association. Boston, Massachusetts.

2. Salo, Albert E., William L. Oaks, and Robert D. MacPhee. ''Measuring the Organic Carbon Content of Source Emissions for Air Pollution Control. Paper No. 74–190. (Presented at the 67th Annual Meeting of the Air Pollution Control Association. Denver, Colorado. June 9–13, 1974.) p. 25.

17.0 Tables, Diagrams, Flowcharts, and Validation Data

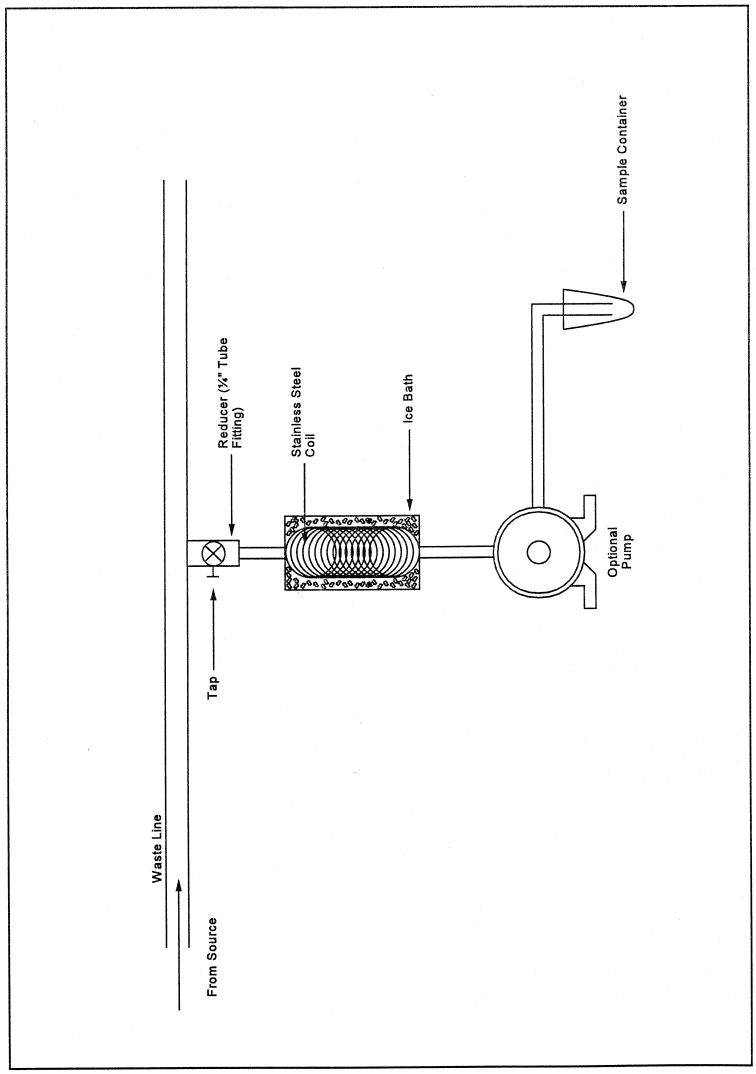

Figure 25E-1. Schematic of Sampling Apparatus

[36 FR 24877, Dec. 23, 1971]

EDITORIAL NOTE: For FEDERAL REGISTER citations affecting part 60, appendix A–7, see the List of CFR Sections Affected, which appears in the Finding Aids section of the printed volume and on GPO Access.

APPENDIX A–8 TO PART 60—TEST METHODS 26 THROUGH 30B

Method 26—Determination of Hydrogen Chloride Emissions From Stationary Sources

Method 26A—Determination of hydrogen halide and halogen emissions from stationary sources—isokinetic method